2005 BUILDING ENERGY EFFICIENCY STANDARDS

CALIFORNIA ENERGY COMMISSION

RESIDENTIAL COMPLIANCE MANUAL

COMMISSION CERTIFIED MANUAL

CEC-400-2005-005-CMF
Revision 3

Arnold Schwarzenegger
Governor

4Q-05

Mike Chrisman

Secretary for Resources

CALIFORNIA ENERGY COMMISSION

William J. Keese
Chairman

Commissioners:

Arthur H. Rosenfeld
James D. Boyd
John L. Geesman
Jackalyne Pfannenstiel

Robert L. Therkelsen,
Executive Director

Valerie Hall,
Deputy Director
ENERGY EFFICIENCY and DEMAND ANALYSIS DIVISION

Bill Pennington,
Office Manager
Buildings and Appliances Office

Project Manager
Maziar Shirakh, PE
Buildings and Appliances Office

Prepared by
Architectural Energy Consultants
San Francisco

Acknowledgements

Efficiency Standards Committees

Commissioner Jackalyne Pfannenstiel, Presiding Member

Commissioner Arthur H. Rosenfeld, Ph.D., Associate Member

Principal Authors/Editors

The Residential Compliance Manual has evolved over the years with contributions made by many persons along the way. The 2005 Residential Compliance Manual was adapted from earlier versions in response to changes to the Standards made through the 2005 update. This most recent version was developed by Architectural Energy Corporation, with assistance from Jon McHugh of HMG. Charles Eley and Erik Kolderup of Architectural Energy Corporation were the technical editors. From the California Energy Commission, Maziar Shirakh, PE, was the project manager, as well as a contributor of technical content. Bill Pennington served as both the office manager and a technical contributor. Other technical contributors from the Energy Commission included Suzie Chan, John Eash, Gary Flamm, Elaine Hebert, Rob Hudler, Bruce Maeda, and Nelson Peña. Special thanks goes to Jon Leber, PE, for his invaluable and detailed comments on both the Residential and Nonresidential Compliance Manuals.

Technical contributors from Architectural Energy Corporation include Erik Kolderup and Charles Eley. Editing, layout and graphics were done by Zelaikha Akram, Tom Bergstrom, Kyra Epstein, and Kimberly Got.

Technical Assistance

The authors are grateful to many people and organizations that contributed to the development and production of this compliance manual. The manual reflects, to a large extent, the comments made by the many people who took time to carefully review earlier versions. Reviewers who contributed to the content include Gary Farber, Bill Mattinson and Mike Gabel of CABEC, Dee Anne Ross and Ken Nittler of Enercomp; Lynn Benningfield, Charles Ehrlich and Nehemiah Stone of the Heschong Mahone Group.

Lastly, so many others contributed helpful suggestions, comments and criticism that are impossible to show a complete list. However, their assistance is acknowledged and greatly appreciated.

In spite of all our efforts, omissions and errors are certain to occur. These, of course, are attributed to the authors alone. If a Manual user discovers an error or has a suggestion, we request that it be brought to the attention of the Energy Efficiency Hotline at 1-800-772-3300 (California) or 916-654-5106.

Acknowledgements **1**
Efficiency Standards Committees 1
Principal Authors/Editors 1
Technical Assistance 1

1. Introduction **1-1**
1.1 Related Documents 1-1
1.2 The Technical Chapters 1-2
1.3 Why California Needs Energy Efficiency Standards 1-3
1.4 What's New for 2005 1-7
1.5 Scope and Application 1-8
1.5.1 Building Types 1-8
1.5.2 Historical Buildings 1-11
1.5.3 Exempt Buildings 1-13
1.5.4 Building Systems Covered 1-14
1.5.5 Additions, Alterations and Repairs 1-14
1.6 Mandatory Measures and Compliance Approaches 1-18
1.6.1 Mandatory Measures 1-18
1.6.2 Prescriptive Packages 1-19
1.6.3 Performance Approach 1-19
1.7 Climate Zones 1-20
1.7.1 Building Location Data 1-21
1.8 Conditioned Floor Area 1-22
1.9 Where to Get Help 1-23
1.9.1 Energy Commission Publications and Support 1-23
1.9.2 Training Opportunities 1-25
1.9.3 Energy Consultants 1-25
1.9.4 On-Line Videos 1-25
1.9.5 HERS Raters and Providers 1-26

2. Compliance and Enforcement **2-1**
2.1 Overview 2-1
2.2 Compliance and Enforcement Phases 2-1
2.2.1 Design Phase 2-2
2.2.2 Permit Application 2-2
2.2.3 Plan Check 2-3
2.2.4 Building Permit 2-3
2.2.5 Construction Phase 2-4
2.2.6 Building Department Field Inspection 2-4
2.2.7 Field Verification and/or Diagnostic Testing 2-5
2.2.8 Approval for Occupancy 2-5
2.2.9 Occupancy 2-6
2.3 Energy Standards Compliance Documentation 2-6
2.3.1 Building Permit Phase Documentation 2-7
2.3.2 Construction Phase Documentation (CF-6R) 2-8
2.3.3 Field Verification and/or Diagnostic Testing Documentation (CF-4R) 2-9
2.3.4 Homeowners Manual 2-10
2.4 Roles and Responsibilities 2-12
2.4.1 Designer 2-12
2.4.2 Documentation Author 2-13
2.4.3 Builder or General Contractor 2-13

2.4.4 Specialty Contractors 2-13
2.4.5 Building Department 2-14
2.4.6 HERS Provider 2-14
2.4.7 HERS Rater 2-15
2.4.8 Owner 2-15
2.5 Field Verification and/or Diagnostic Testing 2-17
2.5.1 Measures Requiring Field Verification and/or Diagnostic Testing 2-17
2.5.2 Sampling 2-18
2.5.3 For More Information 2-18

3. Building Envelope Requirements 3-1
3.1 Overview 3-1
3.1.1 Introduction 3-1
3.1.2 Building Orientation 3-2
3.1.3 What's New for 2005 3-2
3.2 Fenestration 3-4
3.2.1 Relevant Sections in the Standards 3-4
3.2.2 Mandatory Measures 3-5
3.2.3 Prescriptive Requirements 3-12
3.2.4 Compliance Options 3-17
3.2.5 Compliance and Enforcement 3-24
3.3 Insulation 3-26
3.3.1 Insulation General Mandatory Measures 3-26
3.3.2 Ceiling/Roof Insulation 3-27
3.3.3 Radiant Barriers 3-34
3.3.4 Wall Insulation 3-35
3.3.5 Floor Insulation 3-41
3.3.6 Slab Insulation 3-44
3.3.7 Compliance Options 3-45
3.4 Thermal Mass 3-55
3.4.1 Mandatory Measures 3-56
3.4.2 Compliance Options 3-57
3.5 Infiltration and Air Leakage 3-58
3.5.1 Overview 3-58
3.5.2 Mandatory Measures 3-59
3.5.3 Compliance Options 3-62
3.6 Vapor Barriers and Moisture Protection 3-66
3.6.1 Mandatory Measures 3-66
3.7 Compliance and Enforcement 3-67
3.7.1 Design 3-68
3.7.2 Construction 3-68
3.7.3 Field Verification and/or Diagnostic Testing 3-69
3.8 Glossary/Reference 3-69

4. Building HVAC Requirements 4-1
4.1 Overview 4-1
4.1.1 Introduction and Organization 4-1
4.1.2 Prescriptive Packages 4-1
4.1.3 Performance Method 4-2
4.1.4 What's New for 2005 4-2
4.1.5 Common System Types 4-3
4.1.6 Appliance Standards and Equipment Certification 4-3

4.2 Heating Equipment 4-4
4.2.1 Mandatory Measures....4-4
4.2.2 Prescriptive Requirements 4-8
4.2.3 Compliance Options 4-8
4.3 Cooling Equipment....4-8
4.3.1 Mandatory Measures....4-8
4.3.2 Prescriptive Requirements 4-13
4.3.3 Compliance Options 4-15
4.4 Air Distribution Ducts and Plenums 4-16
4.4.1 Mandatory Measures....4-17
4.4.2 Prescriptive Requirements 4-23
4.4.3 Compliance Options 4-25
4.5 Controls....4-33
4.5.1 Setback Thermostats 4-33
4.5.2 Zonal Control....4-35
4.6 Alternative Systems 4-37
4.6.1 Hydronic Heating Systems 4-37
4.6.2 Radiant Floor System....4-41
4.6.3 Evaporative Cooling 4-44
4.6.4 Ground-Source Heat Pumps 4-45
4.6.5 Solar Space Heating 4-46
4.6.6 Wood Space Heating 4-46
4.6.7 Gas Appliances 4-49
4.7 Compliance and Enforcement....4-49
4.7.1 Design 4-49
4.7.2 Construction 4-50
4.7.3 Field Verification and/or Diagnostic Testing 4-50
4.8 Glossary/Reference 4-51
4.8.1 Refrigerant Charge Testing 4-51

5. Water Heating Requirements 5-1
5.1 Overview 5-1
5.1.1 Water Heating Energy 5-1
5.1.2 What's New for 2005 5-2
5.1.3 Water Heater Types 5-2
5.1.4 Distribution System Types....5-2
5.2 Mandatory Requirements....5-4
5.2.1 Equipment Certification 5-4
5.2.2 Equipment Efficiency....5-4
5.2.3 Pipe Insulation....5-6
5.2.4 Insulation Protection....5-8
5.2.5 Certification of Showerheads and Faucets....5-8
5.2.6 Storage Tank Insulation 5-8
5.2.7 Solar or Recovered Energy in State Buildings 5-8
5.2.8 Pool and Spa Equipment....5-9
5.3 Prescriptive Requirements....5-11
5.3.1 Pipe Insulation on Lines to Kitchen 5-11
5.3.2 Systems Serving Individual Dwelling Units 5-11
5.3.3 Systems Serving Multiple Dwelling Units 5-13
5.4 Compliance Options....5-15
5.4.1 Performance Compliance....5-15

5.4.2 Auxiliary Systems 5-15
5.4.3 Combined Hydronic 5-16
5.4.4 Distribution System Options 5-16
5.5 Compliance and Enforcement 5-17
5.5.1 Design 5-17
5.5.2 Construction 5-17
5.5.3 Field Verification and/or Diagnostic Testing 5-18
5.6 Glossary/Reference 5-18
5.6.1 Water Heater Types 5-19
5.6.2 Distribution Systems 5-20

6. Lighting 6-1
6.1 Overview 6-1
6.1.1 Introduction and Scope 6-1
6.1.2 What's New for 2005 6-1
6.1.3 Related Documents 6-2
6.2 High Efficacy Luminaires 6-3
6.2.1 Lumens per Watt 6-4
6.2.2 Electronic Ballasts 6-5
6.2.3 Permanently Installed Luminaires 6-6
6.3 Kitchens 6-6
6.4 Bathrooms, Garages, Laundry Rooms and Utility Rooms 6-11
6.5 Other Rooms 6-12
6.6 Outdoor Lighting 6-14
6.7 Parking Lots and Parking Garages 6-15
6.8 Common Areas of Multifamily Buildings 6-16
6.9 Luminaires in Insulated Ceilings 6-16
6.10 Inspection Protocol for Recessed Luminaires in Insulated Ceilings 6-17
6.11 Recommendations for Luminaire Specifications 6-20
6.12 Residential Manual-On Occupant Sensors 6-20
6.13 Residential Dimmers 6-22

7. Performance Method 7-1
7.1 Overview 7-1
7.2 What's New for 2005 7-3
7.3 The Process 7-3
7.3.1 Defining the Standard Design 7-4
7.3.2 Standard Reports 7-5
7.3.3 Professional Judgment 7-7
7.4 Mixed Occupancy Buildings 7-7
7.5 Multifamily Buildings 7-8
7.5.1 Whole Building Compliance 7-8
7.5.2 Compliance Unit-By-Unit 7-9
7.6 Subdivisions And Master Plans 7-10
7.6.1 Individual Building Approach 7-10
7.6.2 Multiple Orientation Alternative: No Orientation Restrictions 7-11
7.7 HVAC Issues 7-12
7.7.1 No Cooling Installed 7-12
7.7.2 Equipment without SEER 7-12
7.7.3 Multiple HVAC Systems 7-12
7.7.4 Gas-Fired Cooling Systems 7-13
7.7.5 Cool Roofs 7-13

7.7.6 Existing + Addition + Alteration Approach 7-13

8. Additions, Alterations and Repairs 8-1
8.1 Introduction 8-1
8.2 Compliance Approaches 8-4
8.3 Building Envelope 8-5
8.3.1 Mandatory Requirements 8-5
8.3.2 Prescriptive Requirements for Additions Alone 8-6
8.3.3 Prescriptive Requirements for Alterations 8-9
8.4 HVAC 8-12
8.4.1 Mandatory Requirements 8-12
8.4.2 Prescriptive Requirements 8-13
8.5 Water Heating 8-20
8.5.1 Replacement Water Heaters 8-20
8.5.2 Additions 8-21
8.6 Lighting 8-23
8.7 Performance Method for Additions and Alterations 8-24
8.7.1 Whole Building Approach 8-24
8.7.2 Addition Alone Approach 8-25
8.7.3 Existing + Addition + Alteration Approach (also applies to Existing + Alteration when there is no Addition) 8-26

9. INDEX 9-1

Appendix A Compliance Forms A-1

Appendix B Applicable Tables and Language from Standards and RACM B-1
2005 Building Energy Efficiency Standards Table 116-A and Table 116-B B-1
Section 118 (d) and 118 (e) B-3
Section 150 (a) and 150 (b) B-4
Table 151-B and Table 151-C B-5
Section 152 (a) and 152 (b) B-8
2005 Residential ACM Manual Table R-3-11 ....B-12
Appliance Efficiency Standards Table F-3 and Table F-4 ....B-13

Appendix C Natural Gas Appliance Testing (NGAT) Standards C-1

Appendix D Eligibility Criteria for Radiant Barriers D-1

List of Tables

Table 1-1 – Compliance Options vs. Design Recommendations 1-3
Table 1-2 – Building Types Covered by the Low-Rise Residential and Nonresidential Standards 1-10
Table 1-3 – Energy Commission Video Series Titles 1-27
Table 2-1 – Documentation Requirements, Prescriptive and Performance Compliance Methods 2-6
Table 3-1 – Allowable Methods for Determining U-factors 3-8
Table 3-2 – Methods for Determining Solar Heat Gain Coefficients 3-8
Table 3-3 – Maximum U-factors by Climate Zone in Packages C and D 3-14
Table 3-4 – Package C and D SHGC Criteria by Climate Zone 3-16
Table 3-5 – Qualifying Exterior Shades and Solar Heat Gain Coefficients 3-22
Table 3-6 – Raised Floor Constructions Used as Basis for Equivalent U-factor Compliance 3-42
Table 4-2 – Minimum Heating Efficiency for Non-Ducted, Non-Central Gas Fired Heating Equipment 4-5

Table 4-3 – Minimum Heating Efficiency for Heat Pumps 4-6
Table 4-4 – Minimum cooling Efficiencies for Central Air Conditioners and Heat Pumps..... 4-9
Table 4-5 – Minimum Cooling Efficiency for Larger Central Air Conditioners and Heat Pumps 4-9
Table 4-6 – Minimum Cooling Efficiency for Non-Central Space Cooling Equipment Including Room Air Conditioners; and Room Air Conditioner Heat Pumps; Package Terminal Air Conditioners (PTAC); Package Terminal Heat Pumps (PTHP); 4-10
Table 4-7 – Alternatives to Duct Sealing and Refrigerant Charge Measurement in New Construction Package D only (gas heat or heat pump space heating)..... 4-15
Table 4-8 – Slab Insulation Requirements for Heated Slabs 4-42
Table 4-9 – Standards for Ground Water-Source and Ground-Source Heat Pumps Manufactured on or after October 29, 2003 4-45
Table 4-10 – Minimum Air Movement Requirements for Evaporative Coolers 4-45
Table 4-11 – Structure of Target Superheat Temperature..... 4-54
Table 4-12 – Structure of Target Temperature Split (Return Dry-Bulb minus Supply Dry-Bulb).... 4-54
Table 5-1 – System Component Descriptions: Distribution Systems within a Dwelling Unit..... 5-3
Table 5-2 – Minimum Energy Factor Small Water Heaters 5-5
Table 5-3 – Framing Percentages 5-6
Table 5-4 – Preapproved Alternative Water Heating Systems for Single Dwelling Units (Equivalent to prescriptive requirement)..... 5-12
Table 6-1 – High Efficacy Lamps 6-4
Table 7-1 – Special Features to be Listed on CF-1R..... 7-6
Table 8-1 – Comparison of Compliance Methods for Additions..... 8-5
Table 8-2 – Prescriptive Envelope Requirements for Additions..... 8-7
Table 8-3 – Alternatives to Duct Sealing and Refrigerant Charge Measurement 8-16
Table 8-4 – Acceptable Replacement Heating System Fuel Source(s)..... 8-17

List of Figures

Figure 1-1 – One Year Low-Rise Residential Electricity Reduction Due to the 2005 Standards..... 1-4
Figure 1-2 – One Year Low-Rise Residential Electric Demand Reduction Due to the 2005 Standards 1-4
Figure 1-3 – Gas Reduction Due to the 2005 Standards..... 1-5
Figure 1-4 – California Climate Zones 1-21
Figure 1-5 – Total Conditioned Floor Area..... 1-22
Figure 1-6 – Energy Commission Blueprint Newsletter 1-24
Figure 1-7 – Energy Commission Video Series 1-26
Figure 3-1 – NFRC Temporary Label 3-7
Figure 3-2 – Package D Prescriptive Fenestration U-factor Limits by Climate Zone..... 3-14
Figure 3-3 – Package C and D SHGC Criteria by Climate Zone 3-15
Figure 3-4 – Package C and D Prescriptive West-Facing Window Area Limits by Climate Zone... 3-17
Figure 3-5 – Glass Area in Single Family and Multifamily Residence..... 3-18
Figure 3-6 – Difficulty of Shading East- and West-Facing Windows..... 3-20
Figure 3-7 – South-Facing Overhang Dimensions for Prescriptive Compliance..... 3-21
Figure 3-8 – Package D Prescriptive Ceiling/Roof Insulation Requirements..... 3-29
Figure 3-9 – Ceiling Insulation Construction Detail..... 3-31
Figure 3-10 – Baffles at the Eave in Attics..... 3-31
Figure 3-11 – IC-Rated Light Fixture 3-33
Figure 3-12 – Methods of Installation for Radiant Barriers 3-34
Figure 3-13 – Package D Wall Requirements by Climate Zone 3-36
Figure 3-14 – Brick Wall Construction Details 3-38
Figure 3-15 – Wall Construction Detail 3-39
Figure 3-16 – Raised Floor Insulation Requirements by Climate Zone 3-41

Figure 3-18 – Allowed Slab Edge Insulation Placement 3-45
Figure 3-19 – Examples of Poor Quality Insulation Installation 3-47
Figure 3-20 – Cellulose Insulated Wall 3-48
Figure 3-21 – Methods of Joining SIPS Panels 3-53
Figure 3-22 – Controlled Ventilation Crawl Space 3-53
Figure 3-23 – Thermal Mass Performance 3-56
Figure 3-24 – Caulking and Weatherstripping 3-60
Figure 3-25 – Fireplace Installation 3-61
Figure 3-26 – Air-Retarding Wrap 3-64
Figure 3-27 – Blower Door Testing 3-65
Figure 3-28 – Vapor Barriers with Kraft Paper 3-67
Figure 4-1 – Outdoor Compressor/Condenser Unit 4-11
Figure 4-2 – Refrigerant Line Insulation 4-12
Figure 4-3 – Checking Refrigerant Charge 4-14
Figure 4-4 – R-4.2, R-6, and R-8 Ducts 4-24
Figure 4-5 – Example: Buried Ducts on Ceiling and Deeply Buried Ducts 4-26
Figure 4-6 – Connecting Round Metallic Ducts 4-28
Figure 4-7 – Connecting Flex Ducts Using Mastic and Mesh 4-28
Figure 4-8 –Connecting Flex Ducts Using Tape and Clamps 4-29
Figure 4-9 – Sealing Metallic Ducts with Mastic and Mesh 4-30
Figure 4-10 – Options for Suspending Rigid Round Metal Ducts 4-30
Figure 4-11 – Options for Suspending Rectangular Metal Ducts 4-31
Figure 4-12 – Minimum Spacing for Suspended Flex Ducts 4-31
Figure 4-13 – Minimum Spacing for Supporting Vertical Flex Ducts 4-32
Figure 4-14 – Minimizing Radius for Flex Duct Bends 4-32
Figure 4-15 – Computer-Controlled Aerosol Injection System 4-33
Figure 4-16 – Zonal Control Example 4-36
Figure 4-17 – Hydronic Heating System Components 4-39
Figure 4-18– Combined Hydronic System with Water Heater as Heat Source 4-39
Figure 4-19 – Combined Hydronic System with Boiler and Indirect Fired Water Heater 4-41
Figure 4-20– Heated Slab-On-Grade Floor Insulation Options 4-43
Figure 4-21 – Benefit of Thermostatic Expansion Valve 4-51
Figure 4-22 – Measurement Locations for Refrigerant Charge and Airflow Tests 4-53
Figure 5-1 – Meeting Pipe Insulation Requirements for Storage Tank Water Heaters 5-7
Figure 5-2 – Point of Use Distribution System 5-22
Figure 6-1 – Typical Lamp Efficacies 6-5
Figure 6-2 – Kitchen Work Surface Lighting 6-7
Figure 6-3 – General Kitchen Lighting 6-8
Figure 6-4 – Airtight, Type IC Luminaire 6-17
Figure 7-1– Multifamily Building Compliance Option 7-9
Figure 7-2– Subdivisions and Master Plans Compliance Option 7-11
Figure 8-1 – Addition Alone Prescriptive Compliance Approach 8-8
Figure 8-2 – Addition Alone Performance Compliance Approach 8-25

1. Introduction

This compliance manual is intended to help owners, designers, builders, inspectors, examiners, and energy consultants comply with and enforce California's energy efficiency standards for low-rise residential buildings. The lighting and domestic hot water requirements in this compliance manual also apply to high-rise residential buildings. The manual is written as both a reference and an instructional guide and can be helpful for anyone that is directly or indirectly involved in the design and construction of energy efficient residential buildings.

The compliance manual has eight chapters:

- This chapter (Chapter 1) introduces the Standards and discusses the application and scope of the Standards for low-rise residences.
- Chapter 2 reviews the compliance and enforcement process, including design and preparation of compliance documentation through field verification and diagnostic testing.
- Chapter 3 addresses the requirements for the design of the building envelope.
- Chapter 4 covers the requirements for HVAC systems.
- Chapter 5 covers the water heating systems requirements.
- Chapter 6 addresses the requirements for interior and for outdoor lighting permanently attached to the building.
- Chapter 7 covers the computer performance approach.
- Chapter 8 covers additions, alterations, and repairs.

1.1 Related Documents

This compliance manual is intended to supplement three other documents that are available from the Energy Commission. These are as follows:

- *The California 2005 Building Energy Efficiency Standards (Title 24, Part 6).* This compliance manual supplements and explains California's energy efficiency standards for buildings; it does not replace them. Readers should have a copy of the Standards to refer to while reading this manual and also a copy of the Joint Appendix Manual.

- *Joint Appendices.* The joint appendices to the residential and nonresidential Alternate Calculation Method (ACM) manuals contain information that is common to both the residential and nonresidential standards.
- *Joint* Appendix I is a glossary of terms.
- *Joint* Appendix II summarizes the climate zones and design conditions in California cities.
- *Joint* Appendix III is a summary of time dependent valuation (TDV), the new currency for performance calculations.
- *Joint* Appendix IV contains thermal performance data for wall, roof and floor constructions that must be used in calculations.
- *The 2005 Residential ACM Manual.* The 2005 Residential ACM Manual is primarily a specification for computer software that is used for compliance purposes; however, the appendices contain field verification and/or diagnostic testing procedures for HVAC equipment, air distribution ducts, and insulation construction quality.

Material from these other documents is not repeated in this compliance manual, rather it is referenced. If you are using the electronic version of the manual, there are often hyperlinks in this document that will take you directly to the document that is referenced.

1.2 The Technical Chapters

Each of the four technical chapters (3 through 6) begins with an overview, which is followed by a presentation of each subsection. For the building envelope, subsections include fenestration, opaque surfaces (walls, floors, and roofs), and air leakage and infiltration. For HVAC, the subsections include heating equipment, cooling equipment, and ducts. Mandatory measures and prescriptive requirements are described within each subsection or component. Chapter 7 describes the computer performance approach. Chapter 8 covers requirements for additions and alterations.

Each chapter or subsection also has a *compliance options* section. The *compliance option*s section includes information on how to design a building that goes beyond the energy efficient prescriptive requirements and mandatory measures. Compliance options can get credit through the performance approach. There are also *design recommendations* , such as on-site generation, for which no credit is offered (but that will still significantly impact building energy use or peak demand).

Table 1-1 – Compliance Options vs. Design Recommendations

Compliance Options	Credit offered through the performance approach
Design Recommendations, such as on-site generation	No credit, but may still save energy or demand.

1.3 Why California Needs Energy Efficiency Standards

Because energy efficiency reduces energy costs, increases reliability and availability of electricity, improves building occupant comfort, and reduces impacts to the environment, standards are important and necessary for California's energy future.

Energy Savings

Reducing energy use is a benefit to all. Homeowners save money, Californians have a more secure and healthy economy, the environment is less negatively impacted, and our electrical system can operate in a more stable state. The 2005 Standards (for residential and nonresidential buildings) are expected to reduce the growth in electricity use by 478 gigawatt-hours per year (GWh/yr) and reduce the growth in gas use by 8.8 million therms per year (therms/yr). The savings attributable to new low-rise residences are 99 GWh/yr of electricity savings and 5.5 million therms. Additional savings result from the application of the Standards on building alterations. In particular, requirements for fenestration replacement and duct sealing in existing buildings are expected to save about 41 GWh/yr of electricity and 3.0 million therms/yr of gas. These savings are cumulative resulting in six times the annual saving over the three years to the next standard cycle.

Electricity Reliability and Demand

Buildings are one of the major contributors to electricity demand. We learned during the 2000/2001 California energy crisis, and the East Coast blackout in the summer of 2003, that our electric distribution network is fragile and system overloads caused by excessive demand from buildings can create unstable conditions. Resulting blackouts can seriously disrupt business and cost the economy billions of dollars.

Since the California electricity crisis, the Energy Commission has placed more and more emphasis on demand reductions. Changes in 2001 (following the electricity crisis) reduced electricity demand by about 150 megawatts (MW) each year. The 2005 Standards are expected to reduce electric demand by another 180 MW each year. Like energy savings, demand savings accumulate each year.

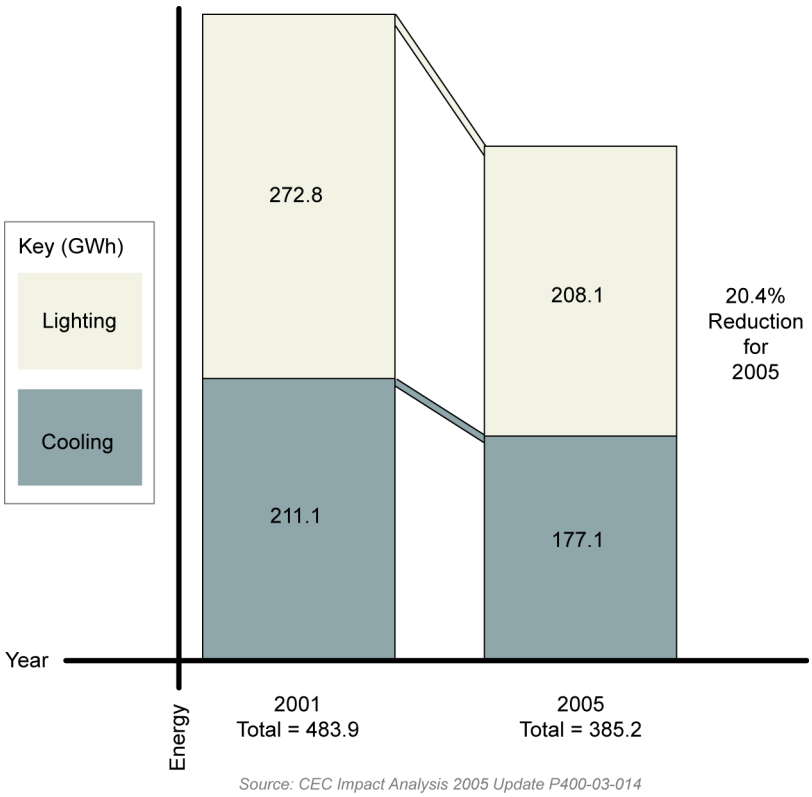

Figure 1-1 – One Year Low-Rise Residential Electricity Reduction Due to the 2005 Standards

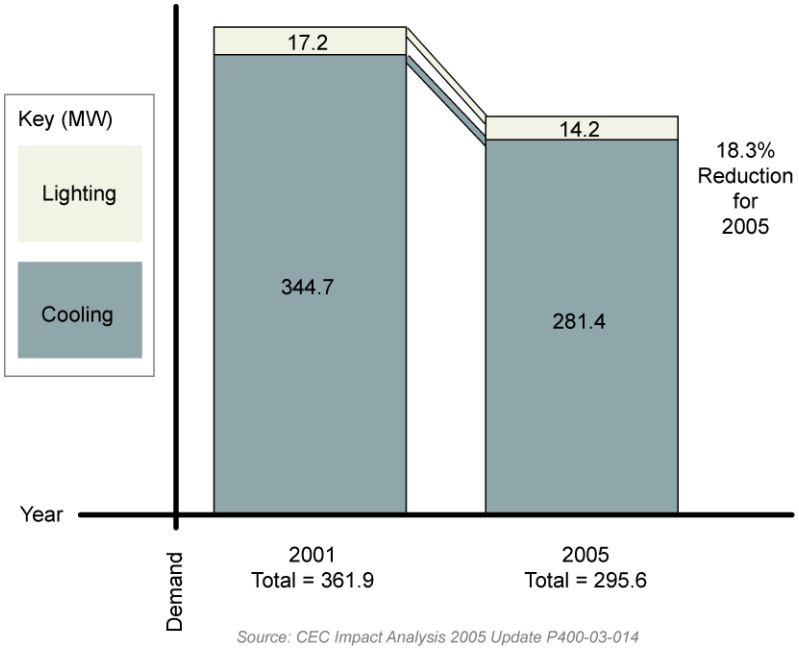

Figure 1-2 – One Year Low-Rise Residential Electric Demand Reduction Due to the 2005 Standards

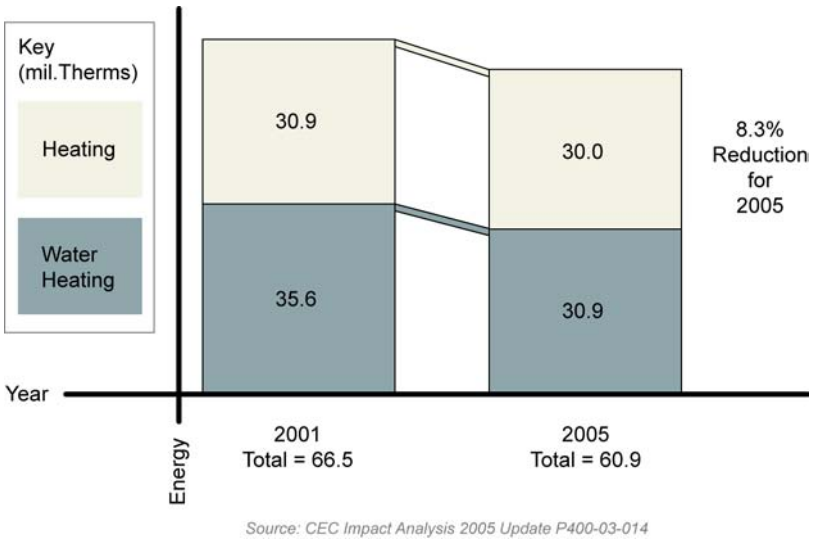

Figure 1-3 – Gas Reduction Due to the 2005 Standards

Comfort

Comfort is an important benefit of energy efficient homes. Energy efficient houses are well insulated, less drafty, and use high performance windows and/or shading to reduce solar gains and heat loss. Poorly designed building envelopes result in houses that are less comfortable. Even with oversized heating and cooling systems, comfort cannot be achieved in older, poorly insulated and leaky homes.

The Standards provide a compliance credit for properly sizing the air conditioner. This improves comfort through an even source of cooling, as opposed to an oversized air conditioner that runs for a short period of time, cools off the house and then sits idle for an extended period of time. Provided that the duct system has been properly designed and installed and has minimal leaks, a smaller air conditioner that runs for a more extended period does a better job of reducing humidity in a house; may use less energy; and creates less stress on the electrical distribution system than an oversized system.

Economics

For the homeowner, energy efficiency helps to ensure that a home is affordable both now and into the future. Banks and other financial institutions recognize the impact of energy efficiency through energy efficient mortgages – they look at the total cost of owning the home, including paying the utility bills. If the utility bills are lower, lenders can qualify borrowers for a larger loan.

From a larger perspective, the less California depends on depletable resources such as natural gas, coal, and oil, the stronger and more stable the economy will remain in the face of energy cost increases. A cost-effective investment in energy efficiency helps everyone. In many ways, it is far more cost effective for the people of California to invest in saving energy than it is to invest in building new power plants.

Environment

In many parts of the world, the use of energy has led to oil spills, acid rain, smog, and other forms of environmental pollution that have ruined the natural beauty people seek to enjoy. California is not immune to these problems, but appliance standards, building standards, and utility programs that promote efficiency and conservation help to maintain environmental quality. Other benefits include reduced destruction of natural habitats, which in turn helps protect animals, plants, and natural systems.

Global Warming

Burning fossil fuel is a major contributor to global warming; carbon dioxide is being added to an atmosphere already containing 35% more than it did two centuries ago. Carbon dioxide and other greenhouse gasses create an insulating layer around the earth that leads to global climate change. Energy Commission research shows that most of the sectors of the state economy face significant risk from climate change including water resources (from reduced snow pack), agriculture, forests, and the natural habitats of a number of indigenous plants and animals.

Scientists recommend that actions be taken to reduce emissions of carbon dioxide and other greenhouse gasses. While adding scrubbers to power plants and catalytic converters to cars reduce other emissions, they do not limit the carbon dioxide we emit into the atmosphere. Using energy efficiently is a far-reaching strategy that can make an important contribution to the reduction of greenhouse gasses.

The National Academy of Sciences has urged the whole country to follow California's lead on such efforts, saying that conservation and efficiency should be the chief element in energy and global warming policy. Their first efficiency recommendation was simple: Adopt nationwide energy efficient building codes. Energy conservation will not only increase comfort levels and save homeowners money, it will also play a vital role in creating and maintaining a healthy environment.

The Warren Alquist Act

Section 25402 of the Public Resources Code

The authority of the Energy Commission to develop and maintain energy efficiency standards for new buildings is provided in Section 25402 of the Public Resources Code. This section of the Code, commonly referred to as the Warren Alquist Act, is direction from the legislature on the development of energy efficiency standards in California.

The act created the Energy Commission in 1974 and gave it authority to develop and maintain energy efficiency standards for new buildings. The act directs the Energy Commission to “Prescribe, by regulation, lighting, insulation, climate control system, and other building design and construction standards which increase the efficiency in the use of energy for new residential and new nonresidential buildings.”

The act also requires that the Standards be cost effective "when taken in their entirety and amortized over the economic life of the structure," and it requires that the Energy Commission periodically update the Standards and develop manuals to support the Standards. Six months after publication of the manuals, the act directs local building permit jurisdictions to withhold permits until the building satisfies the Standards.

The Public Resources Code was amended through Senate Bill 5X in 2002 to expand the authority of the Energy Commission to develop and maintain standards for outdoor lighting and signs.

1.4 What's New for 2005

The most significant changes in the 2005 Building Energy Efficiency Standards include time-dependant valuation that favors peak energy saving measures over off peak measures and new federal air conditioner and water heater standards. Other changes for residential buildings include the following.

All compliance approaches:

- Time Dependent Valuation (TDV). Source energy (which has served California well) was replaced with TDV energy. TDV energy values energy savings greater during periods of peak demand, such as hot summer weekday afternoons, and values energy savings less during off peak periods. TDV gives more credit to measures such as high EER air conditioning units that are more effective during peak periods.
- Efficient lighting – high efficacy (e.g., fluorescent) in all permanent lighting or controls; high efficacy in kitchens; high efficacy or motion sensor in bathrooms, utility rooms, garages, laundry rooms; high efficacy or combined photo sensor/motion sensor for exterior lights; high efficacy or dimmer in other lighting; airtight recessed luminaries
- Third-party field verification – changes made to encourage quality installation to be field verified, including compliance credit for field-verified high quality installation of insulation; group measures requiring third-party testing and verification and improved protocols and procedures.

Prescriptive compliance:

- Duct insulation – Insulation levels depend on climate zone and range from R-4.2 to R-8
- Pipe insulation –hot water pipes ¾ inch and greater in diameter to the kitchen have to be insulated
- Replacement windows – shall be of high efficiency

- Fenestration area limit – limits the fenestration area to 20% of the conditioned floor area in all climate zones for new construction and existing homes subject to certain alterations; for new construction, limits the west facing glass to 5% of the conditioned floor area in cooling climate zones.
- Duct sealing – required when air conditioner/furnace is replaced or ducts are replaced.

Performance compliance:

- Loopholes closed – credit no longer given for reduced glazing area or using a central water heating system in multifamily buildings
- Compliance credit – high EER air conditioners, gas cooling, high quality insulation installation, properly sized air conditioners, efficient air conditioner fan motors, ducts buried in attic insulation
- Additions/Alterations – compliance credit for alterations made to an existing building receive credit only if the improved measure meets or exceeds the prescriptive requirement.

1.5 Scope and Application

1.5.1 Building Types

Though the California Standards apply to both nonresidential and residential buildings, this compliance manual only addresses the requirements for low-rise residential buildings. A companion compliance manual addresses the requirements for nonresidential buildings, including hotels, motels, and high-rise residential buildings that are four stories or more in height.

The three-story designation relates to multifamily buildings, since all single family homes fall under the low-rise residential requirements regardless of the number of stories. An apartment building with three or fewer habitable floors falls under the low-rise residential standards while an apartment building that has more than three habitable floors falls under the nonresidential standards. High-rise residential dwelling units must still comply with the lighting and water heating requirements for low-rise residential buildings, e.g., the *Nonresidential Compliance Manual* makes reference to Chapters 5 and 6 of this document.

A habitable floor is defined in the California Building Code (CBC) and that definition is used with the energy efficiency standards. Mezzanines are not counted as separate habitable floors – nor are minor conditioned spaces such as an enclosed entry stair that leads to an apartment or dwelling unit on the next floor. A habitable story is one that contains space in which humans may live or work in reasonable comfort, and that has at least 50% of its volume above grade.

Live/work buildings are a special case since they combine residential and nonresidential uses within individual units. Such buildings are a common form of new construction in San Francisco and some other urban areas of the state. Even though live/work spaces may be used for an office or a studio, they are typically heated and/or cooled like a residence. For this reason the residential standards are more suitable and the Energy Commission has made this determination. Either the low-rise or high-rise residential standards apply, depending on the number of habitable floors.

However, lighting in designated workspaces in live/work lofts must comply with the nonresidential prescriptive lighting requirements. See Chapter 5 of the *Nonresidential Compliance Manual* and §146 of the Standards for more information.

Explanation of Term

The term building type refers to the classification of buildings defined by the *CUBC* and applicable to the requirements of the *Energy Efficiency Standards.* This manual is concerned with the energy standards that apply to all new low-rise residential buildings, which includes all single-family dwellings and multi-family buildings with three or fewer habitable stories in the entire building. This manual does not consider standards applicable to multi- family buildings with four or more habitable stories in the entire building, hotels, motels and officially designated historical buildings. A multi-family building contains multiple dwelling units that share common walls (single family attached) and may also share common floors or ceilings (apartments).

All new residential buildings not in the above low-rise category are covered in the 2005 edition of Energy Commission's *Nonresidential Manual for Compliance with Energy Efficiency Standards* (see Parts 1.1 and 1.2).

- A single-family building is a single dwelling unit of occupancy group R-3, as defined in the *CUBC,* which stands separate and unattached from other dwelling units but may have an attached garage.
- A multi-family building is a dwelling unit of occupancy group R, as defined in the *CUBC*, that shares a common wall and/or floor/ceiling with at least one other dwelling unit. See Chapter 8 for more information on multi-family energy compliance. A single family attached building is a dwelling unit of occupancy group R that shares a common wall with another dwelling unit.
- An addition is an extension of or increase in conditioned floor area and volume of a building, which can be new construction or adding space conditioning to an existing space. See Chapter 7 for more information on energy compliance of additions.
- An existing building is:

"...a building erected prior to the adoption of [the current] code, or one for which a legal building permit has been issued." [CUBC**,** Part II, Section 403]

Table 1-2 – Building Types Covered by the Low-Rise Residential and Nonresidential Standards

Low-Rise Residential Standards (covered in this compliance manual)	Nonresidential Standards (covered by Nonresidential Compliance Manual)
All low-rise residential occupancies including single family homes, duplexes, garden apartments and other housing types with three or fewer habitable stories.	All nonresidential CBC occupancies (Group A, B, E, F, H, M, S, or U), as well as high-rise residential (Groups R-1 and R-2 with four or more habitable stories), and all hotel and motel occupancies.

Includes:
• All single family dwellings of any number of stories (Group R-3)
• All duplex (two-dwelling) buildings of any number of stories (Group R-3)
• All multifamily buildings with three or fewer habitable stories (Groups R-1 and R-2)
• Additions and alterations to all of the above buildings.
• Lighting requirements for living quarters in high-rise multifamily buildings (over 3 stories) and water heating requirements for high rise multifamily buildings (over 3 stories)
	Includes:
	• Offices
	• Retail and wholesale stores
	• Grocery stores
	• Restaurants
	• Assembly and conference areas
	• Industrial work buildings
	• Commercial or industrial storage
	• Schools and churches
	• Theaters
	• Hotels and motels
	  • Apartment and multifamily buildings with four or more habitable stories (envelope and HVAC requirements)
	  • Long-term care facilities (group R-2) with four or more habitable stories
	  • Dormitories or other congregate residences, or any building with dormitory-style sleeping quarters, with six or more “guest rooms”
	  • Private garages, carports, sheds, and agricultural buildings.

1.5.2 Historical Buildings

Exception 1 to §100(a)

Exception 1 to the Standards §100(a) states that qualified historic buildings, as defined in the California Historical Building Code Title 24, Part 8 or California Building Code, Title 24, Part 2, Volume I, Chapter 34, Division II are not covered by the Building Energy Efficiency Standards. Building Energy Efficiency Standards §146 (a) 5.0 clarifies that lighting systems in qualified historic buildings are exempt from the lighting power allowances only if they consist solely of historic lighting components or replicas of historic lighting components. If lighting systems in qualified historic buildings contain some historic lighting components or replicas of historic components, combined with other lighting components, only those historic or historic replica components are exempt. All other lighting systems in qualified historic buildings must comply with the Building Energy Efficiency Standards.

The California Historical Building Code (CHBC) § 102.1.1 specifies that all nonhistorical additions must comply with the regular code for new construction, including the Building Energy Efficiency Standards. CHBC § 901.5 specifies that when new or replacement mechanical, plumbing, and electrical (including lighting) equipment or appliances are added to historic buildings they should comply with the Building Energy Efficiency Standards, including the Appliance Efficiency Regulations.

The California State Historical Building Safety Board has final authority in interpreting the requirements of the CHBC and determining to what extent the requirements of the Building Energy Efficiency Standards apply to new and replacement equipment and other alterations to qualified historic buildings. It should be noted that in enacting the State Historical Building Code legislation, one of the intents of the Legislature was to encourage energy conservation in alterations to historic buildings (Health and Safety Code § 18951).

Additional information about the CHBC can be found on the following web site:

http://www.dsa.dgs.ca.gov/StateHistoricalBuildingSafetyBoard

Or, contact the SHBSB at (916) 445-7627.

Example 1-1

Question

Are additions to historical buildings also exempt?

Answer

If the addition adjoins the qualified historic building, then the building official at his discretion may exempt those measures, which he determines could damage the historic value of the building. However, “additions which are structurally separated” from the historical building are not exempt from the Energy Efficiency Standards and must comply with 2001 building codes (Historical Building Code, Title 24, Part 8, §8-704).

Example 1-2

Question

A sunspace addition is designed with no mechanical heating or cooling and a glass sliding door separating it from all existing conditioned space. Under what conditions will the Standards not apply to this addition?

Source: CEC Photographer: Andersen Windows

Answer

The Standards do not apply if the space is unconditioned. The sunspace is unconditioned if:

•The new space is not provided with heating or cooling (or supply ducts);

•The new space can be closed off from the existing house with weather stripped doors; and,

•The addition is not indirectly conditioned space.

A building official may require a sunspace to be conditioned if it appears to be habitable space, in which case the Standards apply.

1.5.3 Exempt Buildings

The following building types are exempt from the prescriptive and performance standards.

- Seasonally occupied agricultural housing limited by state or federal agency contract to occupancy not more than 180 days in any calendar year
- Low-rise residential buildings that use no energy obtained from a depletable source for either lighting or water heating and obtain space heat from wood heating or other non-mechanical system
- Temporary buildings, temporary outdoor lighting or temporary lighting in an unconditioned building, or structures erected in response to a natural disaster.

1.5.4 Building Systems Covered

The low-rise residential standards affect the design of the building envelope; the heating, ventilation and air conditioning (HVAC) system; the water heating system; and the lighting system. The Standards do not apply to residential appliances (Appliance Efficiency Regulations may apply); elevators or dumbwaiters; or to portable lighting systems that are plugged into a wall outlet. Only hardwired lighting is regulated, which includes lighting that is a permanent part of the building.

1.5.5 Additions, Alterations and Repairs

§101(b)

§152 (a)

§152 (b)

Additions, alterations, and repairs are common construction projects for California homeowners. The Standards apply to both additions and alterations, but not to repairs. See Chapter 8 for details.

- Additions are changes to an existing building that increases conditioned floor area and volume.
- Alterations are changes to a building's envelope, space conditioning system, water heating system or lighting system, that are not additions.
- Repairs are the reconstruction or renewal of any part of an existing building for the purpose of its maintenance.

Example 1-3

Question

The Standards do not specify whether buildings damaged by natural disasters can be reconstructed to their original energy performance specifications. What requirements apply under these circumstances?

Answer

Buildings destroyed or damaged by natural disasters must comply with the energy code requirements in effect when the builder or owner applies for a permit to rebuild for those portions of the building that are being rebuilt.

Example 1-4

Question

Do the Standards apply to an addition to a manufactured (“mobile”) home?

Source: CEC Photographer: Brian Vahey

Answer

No. Title 25 requirements, not Title 24, govern manufactured homes, including additions to the unit. Jurisdiction in a mobile home park comes under the authority of Housing and Community Development. Jurisdiction of a mobile home on private property may come under the authority of the local building department

Example 1-5

Question

Three stories of residential dwelling units are planned over a first story that includes retail and restaurant occupancies. Should the residential apartments comply with the Residential Standards?

Answer

No. The building envelope and HVAC equipment must comply with the nonresidential (high-rise residential) standards since the structure contains four habitable stories and, as a whole structure, is a high-rise building. The dwelling units, however, must comply with the lighting and water heating requirements for low-rise residences.

Example 1-6

Question

A four-story single family townhouse (with no shared walls) has been constructed. Should the townhouse comply with the low-rise residential standards?

Answer

Yes. As a group R-3 occupancy, the low-rise residential standards apply. The building is not an apartment house (which, according to the CBC, must be at least three dwelling units).

Example 1-7

Question

A 1,200-ft² manager's residence is being constructed as part of a new conditioned warehouse building with 14,000 ft². Which standards apply?

Answer

The whole building can comply with the nonresidential standards, and the residential unit is not required to comply separately since it is a subordinate occupancy containing less than 10% of the total conditioned floor area. However, the residential dwelling unit must meet all low-rise residential mandatory measures as well as the lighting and water heating prescriptive requirements.

Example 1-8

Question

Assume the same scenario as in the previous example, except that the dwelling unit is new and the remainder of the building is existing. Do the residential standards apply?

Answer

Yes. Since 100% of the addition being permitted is a low-rise residential occupancy, compliance under the residential standards is required.

Example 1-9

Question

A residence is being moved to a different location. What are the applicable compliance requirements?

Answer

Because this is an existing conditioned space, the requirements applicable to alterations would apply to any alterations being made. The building does not need to show compliance with the current energy standards applicable to new buildings or additions.

Example 1-10

Question

A previously conditioned retail space is remodeled to become a residential dwelling. What are the applicable compliance requirements?

Answer

The residential dwelling is treated as if it were previously a residential occupancy. In this case, the rules that apply to residential alterations are applied.

Example 1-11

Question

A 10,000 ft^2, 16-unit motel is constructed with an attached 950 ft^2 manager's residence. What are the applicable compliance requirements?

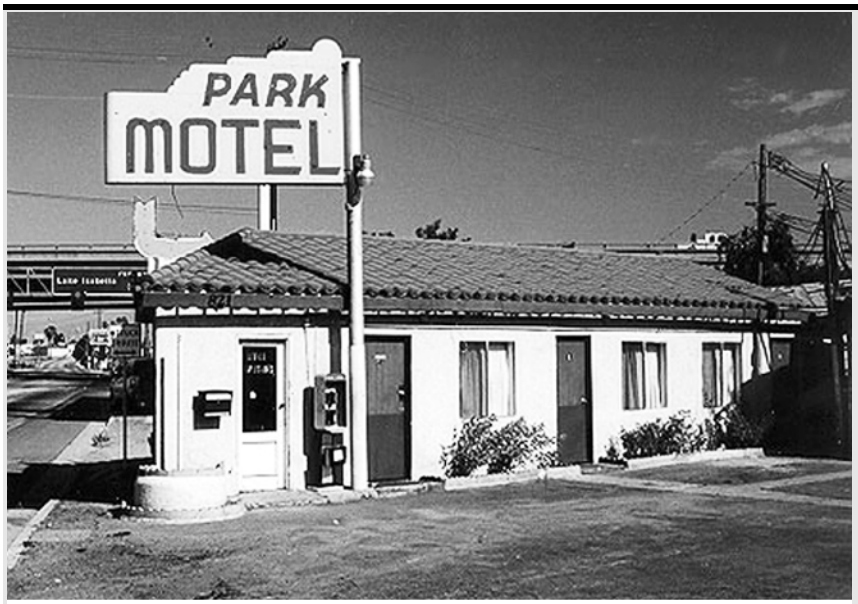

Source: http://www2.sisu.edu/faculty/wooda/calpark.jpeg

Answer

The manager's unit is less than 10% of the total floor area, so compliance of the whole building as the predominant motel occupancy would satisfy the requirements of the Standards. Either the entire building must comply with the nonresidential (high-rise residential and hotel/motel) standards; or the manager's residence must comply with the low-rise residential standards and the motel occupancy portion of the building must comply with the nonresidential standards.

Example 1-12

Question

A subdivision of detached homes includes several unit types, each of which may be constructed in any orientation. What are the applicable compliance requirements?

Answer

The low-rise residential standards are applied to each building type. All four cardinal orientations may be shown to comply or each individual unit in its planned orientation must comply.

Example 1-13

Question

A four-story apartment building has three stories of apartments and a garage on the first floor. What are the applicable compliance requirements?

Answer

For Standards compliance, the low-rise residential standards apply since the building has fewer than four habitable stories. However, for the purpose of other non-energy codes and standards this may be considered a four-story building.

1.6 Mandatory Measures and Compliance Approaches

In addition to the mandatory measures (Section 1.1.6), the Standards provide two basic methods for complying with low-rise residential energy budgets: the prescriptive approach and the performance approach. The mandatory measures must be installed with either of these but note that mandatory measures may be superseded by more stringent measures under the prescriptive approach.

1. The prescriptive approach (composed of several prescriptive packages) (Section 1.6.2) is the simpler. Each individual energy component of the proposed building must meet a prescribed minimum efficiency. The prescriptive approach offers relatively little design flexibility but is easy to use. There is some flexibility for building envelope components, such as walls, where portions of the wall that do not meet the prescriptive insulation requirement may still comply as long as they are area-weighted with the rest of the walls, and the average wall performance complies.
2. The performance approach (Section 1.6.3) is more complicated but offers considerable design flexibility. The performance approach requires an approved computer software program that models a proposed building, determines its allowed energy budget, calculates its energy use, and determines when it complies with the budget. Compliance options such as window orientation, shading, thermal mass, zonal control, and house configuration are all considered in the performance approach. This approach is popular with production home builders because of the flexibility and because it provides a way to find the most cost-effective solution for complying with the Standards.

For additions and alterations, see Chapter 8 for details of compliance approaches that are available.

1.6.1 Mandatory Measures

With either the prescriptive or performance compliance paths, there are mandatory measures that must always be installed. Many of the mandatory measures deal with infiltration control and lighting; others require minimum insulation levels and equipment efficiency. The minimum mandatory levels are sometimes superseded by more stringent prescriptive requirements. For example, if mandatory measures specify R-19 ceiling insulation and the prescriptive approach, Package D, is used, R-30 or R-38 ceiling insulation (depending on climate zone) must be installed. Conversely, the mandatory measures may be of a higher efficiency than permitted under the performance approach; in these instances, the higher mandatory levels must be installed. For example, a building may comply the performance computer modeling with only R-7 insulation in a raised floor, but R-13 must be installed because that is the mandatory minimum in prescriptive Package D.

1.6.2 Prescriptive Packages

§151(f)

The prescriptive requirements are organized by packages. The prescriptive packages are the simplest and least flexible compliance path. The central prescriptive package, Package D, establishes the stringency of the Standards for the performance approach. Approved computer programs model a house with the features of Package D to determine the space conditioning and water heating budgets.

Each prescriptive package is a set of pre-defined performance levels for various building components. Each building component must meet or exceed the minimum efficiency level specified in the package. There are two packages to choose from: Package C (the all-electric house, applied to locations where natural gas is not available) and Package D. (Packages A and B were eliminated in the 2001 Standards.)

Package D and the Package D Alternative are presented in Table 151-C (and its footnotes) in the Standards (also in Appendix B of this document). Package C is presented in Table 151-B of the Standards (Appendix B of this document).

- Standard Package D. The Package D prescriptive requirements serve as the basis of the standard design in the performance approach and determine the energy budget of a proposed design. These prescriptive requirements require that split system air conditioners or heat pumps (for definition see Joint Appendix I) be diagnostically tested to verify that they have the correct refrigerant charge (or field-verified that they are equipped with a thermostatic expansion valve) and that air distribution ducts be diagnostically tested to verify that leakage is less than 6%.
- Alternative Package D. This is a modification to Standard Package D that does not require field verification and/or diagnostic testing. Fenestration performance and space cooling system (or in some cases the heating system) efficiency is more stringent instead. This alternative package achieves equal energy savings to Standard Package D.
- Package C. This package allows electric resistance space heat, but increases stringency for most envelope features to make up for the additional TDV energy that would be used by the electric heating systems. Electric resistance water heating may also be used with Package C if the water heater is located within the building envelope and 25% of the water heating is provided by solar or a wood stove boiler where allowed. See Section 151(f)8.

1.6.3 Performance Approach

The performance approach, also known as the computer method, requires that the annual TDV energy be calculated for the proposed house and compared to the TDV energy budget. TDV energy is the “currency” for the performance approach. TDV energy not only considers the type of energy that is used (electricity, gas, or propane), but also when it is used. Energy saved during periods when California is likely to have a statewide system peak is worth more

the TDV energy budget. TDV energy is the “currency” for the performance approach. TDV energy not only considers the type of energy that is used (electricity, gas, or propane), but also when it is used. Energy saved during periods when California is likely to have a statewide system peak is worth more than energy saved at times when supply exceeds demand. Appendix III of the Joint Appendices has more information on TDV energy.

The use of Energy Commission-approved computer methods represents the most detailed and sophisticated method of compliance. While this approach requires the most effort, it also provides the greatest flexibility. The computer program automatically calculates the energy budget for space conditioning. The budget is determined from the standard design, a computer model of the building using the Package D prescriptive package. The computer software allows manipulation of the proposed building’s energy features to achieve or do better than the energy budget.

1.7 Climate Zones

To standardize calculations and to provide a basis for presenting the prescriptive requirements, the Energy Commission has established a set of standard climate data for each of the 16 climate zones. More information is provided in *Joint* Appendix II, including a listing of climate zones for all California cities. *Joint* Appendix II gives other climate information such as design temperatures for sizing HVAC equipment. The climate zone definitions and data are the same for both the low-rise residential and the nonresidential standards.

Cities may occasionally straddle two climate zones. In these instances, the exact building location and correct climate zone should be verified with the building department or by the person preparing the compliance documentation before any calculations are performed. If a single building development is split by a climate zone boundary line, it must be designed to the requirements of the climate zone in which 50% or more of the dwelling units are contained.

Figure 1-4 – California Climate Zones

1.7.1 Building Location Data

Building location data refers to specific outdoor design conditions used in calculating heating and cooling loads. Different from the climate zone used for compliance (see *Climate Zone* below), design data includes the typically warmest and coolest outdoor temperatures that a building is likely to experience in an average year in its particular location.

Temperatures are from the ASHRAE publication, *SPCDX, Climatic Data for Region X - Arizona, California, Hawaii, Nevada,* May 1982 edition (see Appendix C). For heating, the outdoor design temperature is the Winter Median of Extremes. A higher temperature is permitted, but no lower than this value. For cooling, the outdoor design temperatures must be the 1.0 percent Summer Design Dry Bulb and the 1.0 percent Wet Bulb columns.

If a building location is not listed, the local enforcement agency may determine the location for which data is available that is closest in its design characteristics to the actual building site.

1.8 Conditioned Floor Area

Conditioned floor area (CFA) is the total floor area (in square feet) of enclosed conditioned space on all floors of a building, as measured at the floor level of the exterior surfaces of exterior walls enclosing the conditioned space. [§101] This term is also referred to in the standards simply as the floor area.

This is an important value for the purpose of compliance since annual energy use is divided by this value to obtain the energy budget. In the prescriptive packages, the maximum fenestration area is expressed as a percentage of this value.

CFA is calculated from the plan dimensions of the building including the floor area of all conditioned and indirectly conditioned space on all floors. It includes lofts and mezzanines but does not include covered walkways, open roofed-over areas, porches, pipe trenches, exterior terraces or steps, chimneys, roof overhangs or parking garages. Unheated basements or closets for central gas forced air furnaces are also not included unless shown to be indirectly conditioned.

The floor area of an interior stairway is determined as the CFA beneath the stairs and the tread area of the stairs themselves.

See Figure 1-5 for an example of how CFA is calculated.

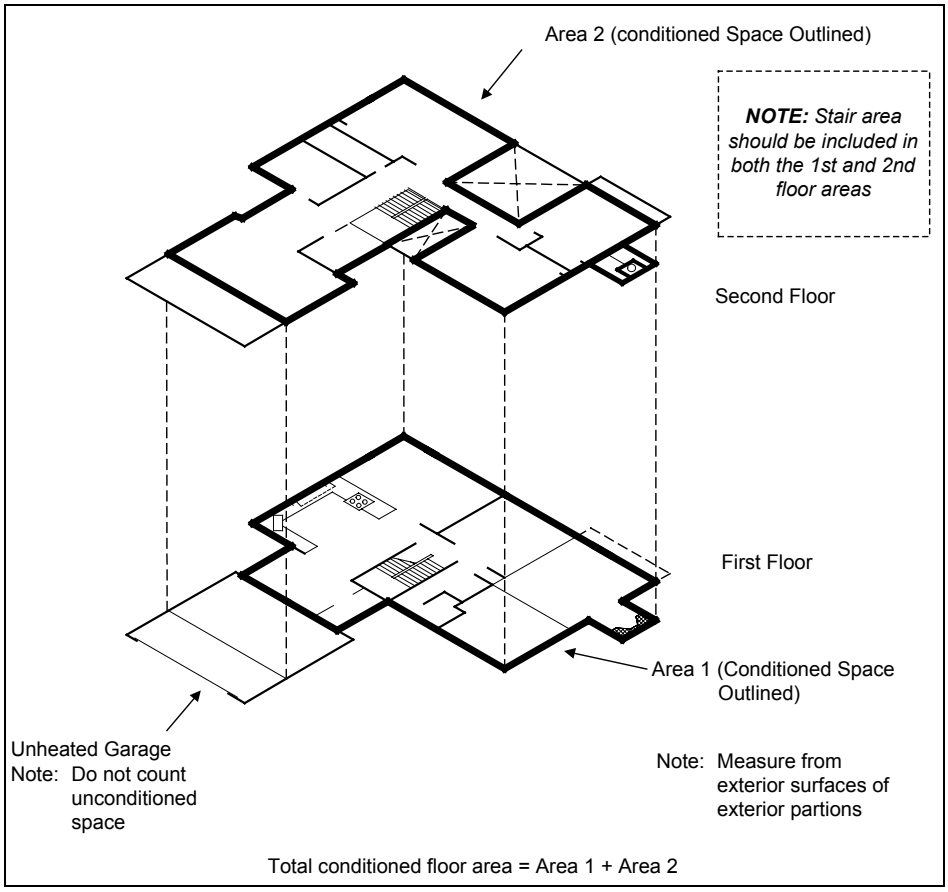

Figure 1-5 – Total Conditioned Floor Area

1.9 Where to Get Help

The Energy Commission has a number of resources to help designers, builders, homeowners and others understand and apply the Standards.

1.9.1 Energy Commission Publications and Support

Telephone Hotline

If the information contained in the Standards or this compliance manual are not sufficient to answer a specific question concerning compliance or enforcement, technical assistance is available from the Energy Commission Energy Hotline.

Your can reach the Energy Hotline on weekdays from 8:00 a.m. - noon and 1:00 p.m. – 4:30 p.m.:

(800) 772-3300
(916) 654-5106

Publications

Publications including the 2005 Standards, the *Joint Appendices*, and the *2005 Residential ACM Manual* and others are available from the Energy Commission website at http://www.energy.ca.gov/title24. Paper copies may also be ordered from:

Publications Unit
California Energy Commission
1516 Ninth Street, MS-13
Sacramento, CA 95814
(916) 654-5200

Blueprint

The Energy Commission publishes the *Blueprint*, a quarterly newsletter that answers questions and addresses issues related to enforcement and compliance. The *Blueprint* also provides updated information on technical assistance and computer compliance programs and lists of training opportunities offered throughout the state. The *Blueprint* is available online at http://www.energy.ca.gov/title24.

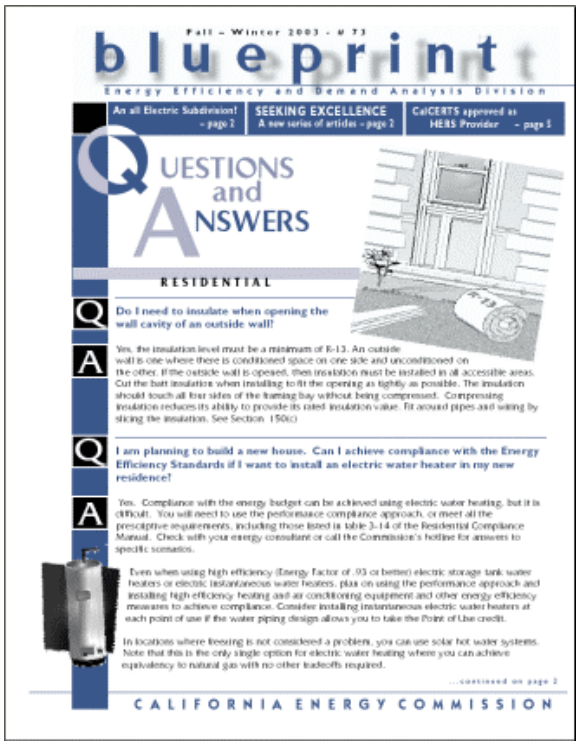

Fall – Winter 2003 - # 73

blueprint

Energy Efficiency and Demand Analysis Division

An all Electric Subdivision! – page 2 | SEEKING EXCELLENCE A new series of articles – page 2 | CalCERTS approved as HERS Provider – page 3

QUESTIONS and ANSWERS

RESIDENTIAL

Q Do I need to insulate when opening the wall cavity of an outside wall?

A Yes, the insulation level must be a minimum of R-13. An outside wall is one where there is conditioned space on one side and unconditioned on the other. If the outside wall is opened, then insulation must be installed in all accessible areas. Cut the batt insulation when installing to fit the opening as tightly as possible. The insulation should touch all four sides of the framing bay without being compressed. Compressing insulation reduces its ability to provide its rated insulation value. Fit around pipes and wiring by slicing the insulation. See Section 150(c)

Q I am planning to build a new house. Can I achieve compliance with the Energy Efficiency Standards if I want to install an electric water heater in my new residence?

A Yes. Compliance with the energy budget can be achieved using electric water heating, but it is difficult. You will need to use the performance compliance approach, or meet all the prescriptive requirements, including those listed in table 3-14 of the Residential Compliance Manual. Check with your energy consultant or call the Commission's hotline for answers to specific scenarios.

Even when using high efficiency (Energy Factor of .93 or better) electric storage tank water heaters or electric instantaneous water heaters, plus on using the performance approach and installing high efficiency heating and air conditioning equipment and other energy efficiency measures to achieve compliance. Consider installing instantaneous electric water heaters at each point of use if the water piping design allows you to take the Point of Use credit.

In locations where freezing is not considered a problem, you can use solar hot water systems. Note that this is the only single option for electric water heating where you can achieve equivalency to natural gas with no other tradeoffs required.

...continued on page 2

CALIFORNIA ENERGY COMMISSION

Figure 1-6 – Energy Commission Blueprint Newsletter

Appliance Standards

Appliances as defined by the Energy Commission include everything from dishwashers and refrigerators to air conditioners and boilers. The performance of some appliances, such as air conditioners, water heaters, and furnaces, is critical to the building energy efficiency standards. The energy efficiency of other appliances such as refrigerators, dishwashers, and clothes dryers are important to homeowners, but do not affect the building standards, since these are considered home furnishings.

The Energy Commission has comprehensive standards that affect the performance of many appliances. These are published in the Appliance Efficiency Regulations, August 2003, Publications Number P400-03-016. This document is available from the Energy Commission website at http://www.energy.ca.gov/efficiency/appliances/ or can be ordered from the Energy Commission Publications Unit (see contact information above).

Appliance Directories

The Energy Commission publishes information on the energy efficiency of appliances. Energy Commission-approved directories can be used to determine if appliances meet the mandatory measures and/or the prescriptive requirements. Data may also be used in performance calculations. The Energy Hotline (see above) can verify certification of appliances and provide information on appropriate directories.

The Energy Commission's website now includes references to listings of the most energy efficient appliances for several appliance types. The website address is:

http://www.energy.ca.gov/efficiency/appliances/index.html

The complete appliance databases can be downloaded from the Energy Commission's website at:

http://www.energy.ca.gov/efficiency/appliances/

The appliance databases, as well as manufacturer and brand codes, are spreadsheet files. After downloading, these files must be decompressed and can be viewed in Excel or other compatible software.

Directory of Certified Insulation Materials

Manufacturers whose insulating materials are certified for sale in California are listed in the Department of Consumer Affair's *Consumer Guide and Directory of Certified Insulation Material*. Each building department receives a copy of this directory. If an insulating product is not listed in the directory, or to purchase a directory, contact the Department of Consumer Affairs, Thermal Insulation Program, at (916) 574-2041.

1.9.2 Training Opportunities

If you are interested in attending a training seminar on the Standards, sign up to receive a free subscription to the *Blueprint* (see above).

Some colleges provide classes on building energy conservation and the energy standards. Information about these classes should be obtained directly from the college.

California utilities, organizations of energy consultants, building industry, and trade associations, and organizations that serve building officials often sponsor or conduct classes on compliance and enforcement of the Title 24 Building Energy Efficiency Standards. These classes are often listed in the *Blueprint* or posted on the Energy Commission's website at http://www.energy.ca.gov/title24

1.9.3 Energy Consultants

The California Association of Building Energy Consultants (CABEC) maintains a directory of consultants who provide compliance assistance. The listing is available at http://www.CABEC.org

1.9.4 On-Line Videos

The Energy Commission has a series of streaming videos that explain energy efficiency concepts and the application of the standards. They can be viewed at http://www.energyvideos.com.

Figure 1-7 – Energy Commission Video Series
More than 100 videos produced by the Energy Commission include discussions, instructions, resources, and requirements for building residential structures.

1.9.5 HERS Raters and Providers

To achieve compliance with the standards, some buildings require third-party diagnostic testing or field verification of energy efficient systems or devices. HERS (Home Energy Rating System) raters are required to be hired by the owner to perform this work. The Energy Commission approves providers who train, certify, and monitor HERS raters. Currently, two providers are certified. To find a rater, contact the Energy Commission HOTLINE at (800) 772-3300 (for calls within California) or (916) 654-5106 or query the Energy Commission website at http://www.energy.ca.gov.

Table 1-3 – Energy Commission Video Series Titles

Area	Topic	
Plan Checking	The Plan Checking Process The Plan Checking Process – Mandatory Measures Total Energy Inspection - Pt. 1 Total Energy Inspection – Pt. 2 The Inspection Process – Foundations The Inspection Process – Framing	The Inspection Process – Final Inspection CABEC Certified Energy Analysts Water Heating Overview for Inspectors Kitchen and Bath Lighting Energy Budget vs. Mandatory Measures
HERS Providers and Raters (T-24)	Blower Door California Home Energy Efficiency Rating System	HERS Rater Code Enforcement
Space Heating and Cooling	Overview Duct Sealing Duct Design Duct Sealing with Duct Tape Energy Code Requirements HVAC Lineset Insulation TXV – Proper sizing of A/C units and ducts TXV – Proper installation of A/C units and airflow	TXV – Proper charge for A/C units TXV – Title 24 and AB 970 compliance Title 24 Zonal Control HVAC Zoning for Comfort and Energy Savings Exhaust Ventilation Systems Overview of Exhaust Ventilation Exhaust Ventilation Energy Code Requirements
Water Heating	Code: Gas Water Heaters Gas Water Heating Overview for Inspectors Overview Installation	Consumer Energy Rebate Program AB-970 Gas Tankless Water Heaters - Overview Gas Tankless Water Heaters - Installation
Building Envelope	Energy Code Requirements - Fiberglass Cellulose Insulation - Overview Cellulose Insulation - Insulating Walls Cellulose Insulation - Insulating Ceilings Fiberglass Insulation - Overview and Insulating Ceilings Fiberglass Insulation - Ceiling Insulation Details Fiberglass Insulation - Installing Ductboard Fiberglass Insulation - Insulating Walls Fiberglass Insulation - Wall Insulation Details Spray Foam Insulation Structural Insulated Panels	Fenestration - Energy Code Requirements Overview of Low-e Windows Manufacturing Low-e Glass Energy Performance Area of Glass – Impact on Compliance with Title 24 Window Sizing Window Performance Housewrap - Overview Installing an Air Barrier Air Barrier Details Energy Code Requirements Radiant Barriers - Overview Installing Flexible Radiant Barriers Installing Radiant Barrier Sheathing Radiant Barrier Energy Code Requirements
Renewable Energy	Overview of Photovoltaic Technology Installing a Photovoltaic System Renewable Energy Rebates	Renewable Energy: Wind Renewable Energy: Residential Wind Generation
Beyond the Code	Major West Coast Builder Finds Profitable New Market The Building Science of It Energy Consultants: Building Better, Selling Faster Why it is Profitable as a Marketing Strategy	Biggest Production Builder Leads the Way HVAC Diagnostics Mold in Buildings Preventing Mold in Buildings
Additions and Alterations	Perspectives on Residential Additions Title 24: Residential Additions Title 24: Residential Alterations	

2. Compliance and Enforcement

2.1 Overview

Primary responsibility for compliance and enforcement with Energy Commission energy efficiency standards rests with the local building department, which is typically associated with a city or county government. Low-rise residential buildings must obtain a permit from the local jurisdiction before a new building may be constructed, before constructing an addition, and before alterations may be made to existing buildings. Before a permit is issued, the local jurisdiction examines the plans and specifications to verify that all applicable codes and standards are being complied with. The energy efficiency standards are just one of the plan check responsibilities. The plans examiner must also deal with the building code, the plumbing code, the electrical code, and the mechanical code.

Once the local jurisdiction has determined that the proposed building (as represented on the plans) complies with all applicable codes and standards, a building permit is issued. This is the first significant milestone in the compliance and enforcement process. After building construction is complete, the local jurisdiction then issues the certificate of occupancy or completes the final inspection, another significant milestone.

While the permit and the certificate of occupancy are the most significant milestones, the compliance and enforcement process is significantly more involved and requires participation by a number of other players including the architect or building designer, specialty engineers (mechanical, electrical, civil, etc.), energy consultants, contractors, the owner, third party inspectors (HERS raters), and many others.

The purpose of this chapter is to describe the overall process and to identify the roles of each party.

2.2 Compliance and Enforcement Phases

The process of complying with and enforcing energy efficiency goals in residential buildings involves many parties. Those involved may include the architect or designer, builder/developer, purchasing agent, general contractor, subcontractor/installer, energy consultant, plan checker, inspector, realtor, and owner/first occupant. All of these parties must communicate for the compliance/enforcement process to run efficiently.

The standards specify detailed reporting requirements that are intended to provide design, construction, and enforcement parties with needed information to complete the building process and ensure that the energy features are installed. Each party is accountable for ensuring that the building's energy features are correctly installed in their area of responsibility.

This section outlines each phase of the process, discussing responsibilities and requirements during the phase.

2.2.1 Design Phase

§10-103(a)(2)

This phase sets the stage for the type and style of building to be constructed. In addition to issues concerning zoning, lot orientation and infrastructure, the building's overall design and energy features are documented in the construction documents and/or specifications. Parties associated with this phase must ensure that the building complies with the standards and that the significant features required for compliance are documented on the plans and/or specifications.

During the design process, an energy consultant or other professional will typically make calculations to ensure that the building complies with the standards. When appropriate, recommendations or alternatives will be suggested to achieve compliance.

Plans and specifications are required to contain details to show the building features that are necessary to achieve compliance, including insulation levels, window performance, equipment performance, sealing and weather stripping requirements, and any other feature that was used for compliance or is a mandatory measure. Essentially the plans and specifications will be complete and thorough with regard to energy efficiency features.

2.2.2 Permit Application

§10-103(a)2

When the design is complete, the construction documents are prepared, and when other approvals (planning department, water, etc.) are secured, the owner or contractor makes an application for a building permit. This is generally the last step in a long process of planning and design. At this point, the infrastructure (streets, sewers, water lines, electricity, gas, etc.) is in place or is being constructed and it is time to begin the process of constructing the building(s).

To assist the building department in verifying that the proposed building complies with the energy efficiency standards, a set of compliance documents are submitted with the building permit application. These documents consist of a Certificate of Compliance, which is required by the energy efficiency standards (see §10-103). The length and complexity of the documentation can vary considerably depending on the number of buildings that are being permitted, whether or not an orientation-independent permit is being requested, whether the performance approach or the prescriptive approach is being used, and many other factors. An energy consultant who understands the code and is able to help the builder or owner comply with the standards in the most cost effective manner often prepares the compliance documents.

The administrative standards §10-103(a)2 require that documentation be submitted with permit applications that will enable the plans examiner to verify the building's compliance. The forms used to demonstrate compliance must be

readily legible and of substantially similar format and informational order as those specified in this compliance manual.

2.2.3 Plan Check

Local building departments check plans for conformance to building standards. This includes health and safety requirements, such as fire and structural, along with energy requirements. Vague and/or missing details on the construction documents must be corrected or clarified. Complete plans help to speed the plan check process, as the plans examiner would have all the information that they need to complete the review. Having to go back to the applicant and request more information is always a time consuming process that can be minimized with more complete construction documents.

From the building department's perspective, their job is to verify that the information contained on the construction documents matches the information that is contained on the energy efficiency compliance documents. Contractors in the field will seldom look at the compliance document when they do their job. Instead, they will rely on the plans and specifications for direction. It is essential that the building represented on the plans and specifications complies with the energy efficiency standards. The compliance documents are a tool to ensure this.

The building department also verifies that the compliance documents do not contain errors. When the compliance documents are produced by Energy Commission-approved computer programs, there is less chance that there will be computational errors, but it is still essential that the plans examiner verify that the building represented on the plans is the same building that is represented in the compliance documents. To obtain a list of Energy Commission approved compliance programs visit their Website at:

http://www.energy.ca.gov/title24/2005standards/2005_computer_prog_list.html

Or call the Efficiency Standards Hotline at 916-654-5106.

With production homes, where a builder may be constructing several identical houses at roughly the same time, the compliance documentation may be prepared in such a way that a house or model can be constructed in any orientation. When an application is filed for orientation independence, it usually follows the performance approach – if the house is shown to comply when oriented along the four main compass points, it can be assumed to comply in any orientation.

2.2.4 Building Permit

When the plans examiner is satisfied that the building meets the standards, the building permit is issued. This is the first significant milestone in the compliance and enforcement process. The building permit is the green light for the contractor to begin the work. In some cases, the building permits are issued in phases. Sometimes there is a permit for site work and grading that precedes the permit for actual building construction.

2.2.5 Construction Phase

Upon receiving a building permit from the local building department, the contractor begins construction. The permit requires the contractor to construct the building in substantial compliance with the plans and specifications, but often there are variations. Some of these variations are formalized through change orders. When change orders are issued, it is the responsibility of the permit applicant and the local jurisdiction to verify that compliance with the code is not compromised by the change order. In some cases, it will be quite clear if a change order would compromise compliance, for instance when an inexpensive single glazed window is substituted for a more expensive high performance window. Other times, it will be difficult to determine if a change order would compromise compliance, for instance when the location of a window is changed or when the configuration of the house is changed. Field changes that may result in non-compliance require building department approval of revised plans and energy compliance documentation demonstrating that the building is still in compliance.

During the construction process, the general contractor or specialty contractors are required to complete various construction certificates. The purpose of these certificates is to verify that the contractor is aware of the requirements of the standards and that they have followed the Energy Commission-approved procedures for installation. The Installation Certificate (CF-6R) is really several separate certificates that are completed by each contractor as they install the windows the water heater and plumbing the HVAC ducts and equipment, the insulation, and by the contractor or specialist responsible for building envelope tightness.

2.2.6 Building Department Field Inspection

Local building departments, or their representatives, inspect all new buildings to ensure conformance to building standards. Field construction changes and non-complying energy features require parties associated with previous phases to repeat and revise their original energy compliance documents.

Building departments will make multiple visits to a building site to verify construction. The first visit is typically made just before it is time to pour the slab or the building foundation. At this visit, the building inspector verifies that the proper reinforcing steel is in place and that necessary wiring and plumbing that will be embedded in the slab meets the requirements of the standards. This would be the best time to verify features that may be installed in concrete slab floors such as slab edge insulation or hot water recirculation loops that where piping is installed in the slab, see Section 3.3.6, Slab Insulation in the Envelope Chapter of this manual.

The second visit comes after the walls have been framed in and the wiring, plumbing, and other services have been roughed in. This inspection is generally made before the insulation is installed, otherwise it would be more difficult to verify that the services are in compliance with building code requirements. This would also be the best time to assure sealing and caulking around windows and caulking and sealing or caulking of holes through the framing for piping or electrical penetrations are complete.

The third and final inspection comes at the end after the walls have been closed and the final electrical and plumbing fixtures are in place. In the typical building inspection process, it is difficult to verify that energy efficiency is being achieved at this point. For instance, the insulation is not in place at the time of the framing inspection and is concealed at the time of the final inspection. For this and other reasons, the Installation Certificate and or field verification and/or diagnostic testing is critical. The Installation Certificate certifies the R-value of insulation installed in the roof, ceiling, walls, floor, slab and foundation walls, including the brand, thermal resistance (R-value), and the thickness.

2.2.7 Field Verification and/or Diagnostic Testing

Some building features require field verification and/or diagnostic testing by a third party inspector. The Energy Commission has a process for certifying HERS raters, and a certified HERS rater is required when field verification and/or diagnostic testing is necessary.

Both prescriptive packages C and D as well as most performance method applications require some sort of field verification and/or diagnostic testing. Some of the typical measures that require field verification and/or diagnostic testing are split system air conditioners, thermostatic expansion valve (TXV) and duct sealing. Other measures requiring verification include air, refrigerant charge, reduced duct surface area, increased duct R-value, and high EER cooling equipment. Other measures that require diagnostic testing are reduced infiltration through blower door testing and reduced fan power. Quality installation of insulation is another measure that requires field verification and/or diagnostic testing.

The requirements for field verification and/or diagnostic testing apply only when equipment or systems are installed that require verification or testing. If a house has no air distribution ducts, then a HERS rater does not have to test the ducts, since there are no ducts to test. Similarly, if a house showing prescriptive compliance does not have a split system air conditioner or heat pump, then a HERS rater does not have to test the refrigerant charge or verify that there is a TXV, because the requirements do not apply. Likewise, if compliance for a house is achieved using an alternative that does not require a TXV, then a HERS rater does not have to come to the site and verify that one has been installed.

Some homes along the coast are built without air conditioning and use hydronic systems or other heating systems without air distribution ducts. In this case, a HERS rater is not required, even when prescriptive package D or C is used for compliance, unless compliance credit is desired for measures such as quality insulation installation (see Residential ACM Appendix RH).

2.2.8 Approval for Occupancy

In multifamily dwellings of three and more units, the final step in the compliance and enforcement process is when the building department issues an occupancy permit. This is the green light for occupants to move in. Single family dwellings and duplexes may be approved for occupancy without an occupancy permit

being issued. Often a signed-off final inspection serves as an approval for occupancy. Prior to the approval for occupancy a signed CF-4R must be provided to the building official by the HERS rater (HERS rater must provide copies of CF-4R to builder, HERS provider, and building official) if field verification or diagnostic testing is required by the compliance documentation.

2.2.9 Occupancy

At the occupancy phase, the builder is required to provide the homeowner with a manual that contains instructions for operating and maintaining the features of their building efficiently. See below for more details.

2.3 Energy Standards Compliance Documentation

Compliance documentation includes the forms, reports and other information that is submitted to the building department with an application for a building permit. It also includes documentation completed by the contractor or specialty contractors to verify that certain systems and equipment have been correctly installed. It may include reports and test results by third party inspectors (HERS raters). Ultimately, the compliance documentation (or information from the compliance documentation) is included with a homeowner's manual so that the end user knows what energy features are installed in the house.

Compliance documentation is completed at the building permit phase, the construction phase, the testing and verification phase and at the final phase. The required forms and documents are shown in Table 2-1 and described in the rest of this section in more detail.

Table 2-1 – Documentation Requirements, Prescriptive and Performance Compliance Methods

Phase	Method	Documentation Required when applicable
Building Permit	Prescriptive and Performance	CF-1R, Certificate of Compliance
	Prescriptive and Performance	MF-1R, Mandatory Measures Checklist
	Prescriptive	WS-1R, Thermal Mass Worksheet Checklist
	Prescriptive	WS-2R, Area Weighted Average Calculation Worksheet
	Prescriptive	WS-3R, Solar Heat Gain Coefficient (SHGC)
	Prescriptive	WS-4R, Fenestration – Maximum Allowed Worksheet
	Prescriptive and Performance	WS-5R, Residential Kitchen Lighting Worksheet
	Prescriptive and Performance	CF-SR, Solar Water Heating Calculation Form
Field Verification and/or Diagnostic Testing	Prescriptive and Performance	CF-4R, Certificate of Field Verification and Diagnostic Testing
Construction	Prescriptive and Performance	CF-6R, Installation Certificate

2.3.1 Building Permit Phase Documentation

§10-103(a)2

Compliance documents at the building permit phase include:

- Certificate of Compliance (CF-1R)
- Mandatory Features Checklist (MF-1R)

Depending on the compliance approach, the building permit compliance documentation may also include the Solar Water Heating Calculation Form (CF-SR), the Thermal Mass Worksheet (WS-1R), the Area Weighted Average Calculation Worksheet (WS-2R), the Solar Heat Gain Coefficient (SGHC) Worksheet (WS-3R), however; the Residential Kitchen Lighting Worksheet (WS-5R) is required for both compliance approaches. Blank copies of these documents are included in Appendix A for use with the prescriptive compliance requirements. When the performance approach is used, see Table 2-1 for applicable required forms needed for Energy Commission-approved software.

The purpose of the compliance documentation is to enable the plans examiner to verify that the building design complies with the standards and to enable the field inspector to readily identify building features that are required for compliance.

Certificate of Compliance (CF-1R)

The standards require that a certificate of compliance be included on the plans. The performance CF-1R form summarizes the minimum energy performance specifications needed for compliance including the results of the heating and cooling load calculations.

Placing a copy of the CF-1R on the drawings, taping a CF-1R to the drawings or printing the CF-1R information directly on the drawings may meet the requirement that the certificate be on the plans. Verify with the local enforcement agency which is acceptable.

Mandatory Measures Checklist (MF-1R)

The mandatory measures checklist serves two purposes: it allows the designer to acknowledge their responsibility to include the features in the design and it is used in the field to verify that each of the mandatory measures is in compliance. The information on the mandatory measures checklist may be placed on the plans along with the Certificate of Compliance. Alternatively, the designer must ensure that all applicable mandatory features are indicated on the plans and specifications.

2.3.2 Construction Phase Documentation (CF-6R)

§10-103(a)3 and 4

The installation certificate, CF-6R, is completed during the construction phase of the compliance and enforcement process. The CF-6R is really several documents in one. The documents are completed by the contractors responsible for installing the windows (fenestration), the air distribution ducts and the HVAC equipment, the measures that affect building envelope tightness, the lighting system, and the insulation.

The CF-6R is signed by various installers.

- HVAC Systems. The contractor who installs mechanical equipment signs this part. Heating and cooling equipment are listed and the energy efficiency, capacity, design loads and other properties of each piece of equipment is documented.
- Water Heating Systems. This part includes information about the water heating equipment installed in the building, including model number, energy efficiency, tank size, input rating and other properties. The installer also verifies that faucets and shower heads are certified and comply with the appliance standards.
- Fenestration/Glazing. This part includes a list of all windows installed in the home. For each, the U-factor, SHGC, area, number of panes, and number of windows of this type in the building are indicated. This section is signed by the contractor that installs the windows.
- Duct Leakage and Design Diagnostics. This part is signed by the contractor responsible for installing the HVAC air distribution ducts and verifying that they comply with the leakage requirements. On this form the contractor includes the results of diagnostic tests, which will later be verified by a third-party inspector (HERS rater).
- Refrigerant Charge and Airflow Measurement. This part is signed by the contractor responsible for verifying that split system air conditioner and heat pumps have the correct refrigerant charge. This form contains diagnostic data that are later verified by a third-party inspector (HERS rater).
- Duct Location and Area Reduction Diagnostics. This part is completed and signed by the contractor who installs the HVAC air distribution ducts. It verifies the location of the ducts and/or includes information on duct location. This form is used only when the default duct area is not assumed.
- Building Envelope Leakage Diagnostics. This part is completed by the contractor responsible for testing building envelope leakage through pressurization of the house. This form contains

test results that will later be verified by a third-party inspector (HERS rater).

- Insulation Certificate. This part is completed and signed by the contractor responsible for installing the insulation. This indicates the manufacturer, brand, and thermal properties of insulation installed in the roof, ceiling, walls, and floor.
- Insulation Quality Checklist. This part is completed and signed by the insulation contractor when credit is taken for quality insulation installation. This is later verified by a third-party inspector (HERS rater). Credit for quality insulation installation is new with the 2005 standards.
- Lighting Systems. This part is completed and signed by the contractor responsible for installing hard-wired lighting systems.

Persons signing these CF-6R forms are verifying that the installed efficiencies or requirements meet or exceed those used for compliance with the standards as shown on the CF-1R. The CF-6R must be posted at the job site in a conspicuous location (e.g., in the garage) or kept with the building permit and made available to the enforcement agency upon request.

When field verification and/or diagnostic testing is required for a home, the builder shall provide a copy of the CF-6R to the HERS provider and to the building department upon request.

Information from the CF-6R is included with the homeowners' manual (see below). This provides the homeowner with information about energy efficiency features installed in their home.

2.3.3 Field Verification and/or Diagnostic Testing Documentation (CF-4R)

Many of the prescriptive requirements and some of the measures that may be used for compliance in the performance approach may require field verification and/or diagnostic testing. This must be performed by a third-party inspector that is specially trained and independent from the builder or general contractor. The Energy Commission recognizes HERS raters for this purpose.

When field verification and/or diagnostic testing is required, the *Certificate of Field Verification and Diagnostic Testing* (CF-4R) is completed and signed by the HERS rater. These documents include information about the measurements and tests that were performed. The HERS rater verifies that the requirements for compliance credit have been met.

The HERS rater provides the certificate to the builder, the HERS provider, and the building department. The builder is ultimately responsible for ensuring that the building department has received the CF-4R prior to the occupancy permit or final inspection.

Raters shall provide a separate CF-4R form for each house the rater determines has met the diagnostic requirements for compliance. The HERS rater shall not sign a CF-4R form for a house that does not have a CF-6R signed by the installer.

Form CF-4R requires a signature from a HERS rater, certifying whether the building was tested or approved as part of sample testing.

2.3.4 Homeowners Manual

§10-103(b)

The final document in the compliance and enforcement process is the information that is provided to the homeowner. At the completion of construction and prior to occupancy, the builder must provide the homeowner with a manual that contains the information needed to operate the home in an energy efficient manner and to maintain it so that it will continue to work efficiently into the future.

The Energy Commission has developed a model for this purpose:

The California Home Energy Guide (P400-99-003) and can be seen at http://www.energy.ca.gov/efficiency/home_energy_guide/ or for further information contact the Energy Hotline (800) 772-3300

The builder may use the California Home Energy Guide publication or develop its own manual that provides the same information. The manual must contain all the information from the compliance documents including:

- Certificate of Compliance (CF-1R)
- Mandatory Measures Checklist (MF-1R)
- Installation Certificate (CF-6R)

For individually owned units in a multifamily building the documentation is provided to the owner of the dwelling unit or to the individual(s) responsible for operating the feature, equipment, or device. Information must be for the appropriate dwelling unit or building (photocopies are acceptable).

Example 2-1

Question

What are the plan checking/field inspection requirements related to the CF-6R?

Answer

The CF-6R (Installation Certificate) is not required to be submitted with other compliance documentation at the time of permit application, but rather is posted or made available for field inspection. A field inspector will want to check the equipment installed against what is listed on the CF-6R and compare the CF-6R and CF-1R for consistent equipment characteristics.

For a performance approach that relies on duct efficiency improvements or reduced envelope leakage, the field inspector should check the Special Features and Modeling Assumptions and HERS Required Verification listings on the CF-1R for required installer tests for reduced duct leakage or building pressurization and verify that these tests were performed and documented on the Installation Certificate CF-6R.

California Code of Regulations §10-103 allows the enforcement agency to request additional information to verify that the building construction is consistent with approved plans and specifications. When equipment efficiencies above the minimum requirements are shown on the CF-1R (e.g., 13 SEER cooling equipment; 0.63 energy factor water heater), the building

department should have procedures in place to verify efficiency. Requiring proof of efficiency from the installer, such as a copy of the appropriate page from a directory of certified equipment, is one possibility. Another possibility is to require that the applicant send a duplicate of the CF-6R through plan check for verification.

Example 2-2

Question

What happens to the CF-6R after the final inspection?

Answer

California Code of Regulations §10-103 requires that the builder provide to the “building owner, manager, and the original occupants the appropriate Certificate(s) of Compliance and a list of the features, materials, components, and mechanical devices installed in the building, and instructions on how to use them efficiently.” At a minimum, information on the CF-6R and CF-1R must be provided to the original building occupants along with operating and maintenance information such as the "The California Home Energy Guide to California Home Comfort and Energy Savings" (Energy Commission publication number P400-99-003-FXSX, where the XX are numbers that relates to a series of subject matter inserts that can be placed in the guide).

Example 2-3

Question

As a general contractor, when I have finished building a residence, is there a list of materials I am supposed to give to the building owner?

Answer

The “owner at occupancy” must receive a copy of the following completed forms for that dwelling unit:

1. Certificate of Compliance (CF-1R)
2. Mandatory Measures Checklist (MF-1R)
3. Installation Certificate (CF-6R)
4. In addition, they must receive either:
5. A manual which contains instructions for operating and maintaining the features of their building efficiently, or
6. The Guide to California Home Comfort and Energy Savings published by the Energy Commission.

As an alternative to including the forms, the builder may format the information in a manner more suitable for home owners. See section above describing the Homeowner’s Manual.

Example 2-4

Question

I built some multifamily buildings and have some questions about the information I must provide (as required by Administrative Regulations, §10-103). Specifically:

If the building is a condominium, can I photocopy the same information for all units?

When the building is an apartment complex (not individually owned units), who gets the documentation?

If an apartment is converted to condominiums, does each owner/ occupant receive copies of the documentation?

Answer

Photocopied information is acceptable. It must be obvious that the documentation applies to that dwelling unit—that is, the features installed must match the features shown on the Installation Certificate (CF-6R). If compliance documentation is for a "building," a photocopy of the compliance forms for that building must be provided. If individual compliance is shown for each unique dwelling unit, a photocopy of the documentation which applies to that dwelling unit, must be provided.

The documentation and operating information is provided to whoever is responsible for operating the feature, equipment, or device (typically the occupant). Maintenance information is provided to whoever is responsible for maintaining the feature, equipment or device. This is either the owner or a building manager (§10-103).

If, during construction, the building changes from an apartment to condominiums, each owner at occupancy would receive the documentation. If an existing apartment building changes to condominiums at a later date, the documentation requirements are triggered only by a building permit application requiring compliance with the Energy Efficiency Standards. (Changing occupancy does not trigger compliance with the standards.)

2.4 Roles and Responsibilities

2.4.1 Designer

5537 and 6737.1 of California Business and Professions Code

The designer is the person responsible for overall building design. The designer is also responsible for compliance with the energy efficiency standards as well as all other building codes. The designer is required to sign the Certificate of Compliance (CF-1R) in the appropriate block. By signing, the designer is certifying that the building has been designed to comply with the energy efficiency standards and that they either:

- Directly prepared and coordinated the compliance documents, or
- Delegated responsibility to an energy documentation author who has provided the compliance analysis and documentation under their direction.

For many projects the designer will be an architect, engineer or other California licensed professional. However, a licensed professional is not always required for low-rise residential buildings. The California Business and Professions Code permits unlicensed designers for wood framed single family dwellings as long as they are no more than two stories in height (not counting a possible basement). Two-story wood framed multifamily buildings may also be designed by unlicensed designers as long as the building has three or fewer dwelling units.

When the designer is a licensed professional, the signature block must include the license number.

2.4.2 Documentation Author

The documentation author is the person responsible for completing the compliance documentation at the building permit phase that demonstrates that a building complies with the standards.

The documentation author is not subject to the limitations and restrictions of the *Business and Professions Code*. The documentation author's signature is to verify that the documentation is accurate and complete.

For a list of qualified documentation authors visit the Commissions website at http://www.energy.ca.gov/efficiency/cabec_roster.html

2.4.3 Builder or General Contractor

The builder means the general contractor responsible for construction. For production homes, the builder may also be the developer with responsibility for arranging financing, acquiring the land, subdividing the property, securing the necessary land planning approvals and attending to the other necessary tasks that are required prior to actual construction. Many production builders are also involved in the marketing and sales of homes after they are constructed.

During the construction process, the builder or general contractor usually hires specialty contractors to provide specific services, such as installing insulation, designing and installing HVAC systems, etc. For homes that do not require a design professional, the builder may sign the Certificate of Compliance (CF-1R) in the "Designer or Owner" signature block.

The builder may also sign the Installation Certificate (CF-6R) on behalf of the specialty contractors it hires, but normally completion and signature responsibility rests with the specialty contractor.

The contractor shall also cooperate with the HERS rater if field verification and/or diagnostic testing is required. One of the tasks is to provide the HERS provider a copy of the CF-6R signed by the appropriate builder employees or sub-contractors. This document will identify the measures that require field verification and/or diagnostic testing. Ultimately it is the builder's responsibility to ensure that the CF-6R is provided to the HERS rater (RACM Manual, chapter 7).

2.4.4 Specialty Contractors

Specialty contractors include the firms that install insulation, install windows, install HVAC systems and/or duct systems, install water heating and plumbing systems and perform other specialist type services during building construction. Though the builder has ultimate responsibility and may complete all the sections of the CF-6R, specialty contractors may, and are encouraged to, be responsible

for completing the portion of the Installation Certificate (CF-6R) representing the work for which they are responsible.

2.4.5 Building Department

The building department is the local agency with responsibility and authority to issue building permits and verify compliance with applicable codes and standards.

Building departments play several key roles in the compliance and enforcement process. They review the compliance documentation that is produced at the building permit phase and compare the documentation to the plans and specifications. When it has determined that the building design is in compliance with the standards, the building department issues a building permit.

During construction, building departments make several visits to the construction site to verify that the building is being constructed in compliance with the approved plans, specifications, and compliance documentation. As part of this process, they may review the Installation Certificate (CF-6R), which has details on energy efficiency features installed in the house and contains certifications by the appropriate contractors that the work was performed in compliance with the standards.

At its discretion, the building department may observe the diagnostic testing and field verification performed by subcontractors and the certified HERS rater, in conjunction with the building department's obligation to corroborate the results documented in installer certifications and in the Certificate of Field Verification and Diagnostic Testing (CF-4R).

For dwelling units that have used a compliance alternative that requires field verification and diagnostic testing, the building department will not approve a dwelling unit for occupancy until the building department has received from The HERS rater a Certificate of Field Verification and Diagnostic Testing (CF-4R) that has been signed and dated by the HERS rater. The builder is ultimately responsible for ensuring that the building department has received the CF-4R prior to the occupancy permit or final inspection.

2.4.6 HERS Provider

http://www.cheers.org

http://www.calcerts.com

The HERS provider is an organization that the Energy Commission has approved to administer a HERS program. The provider has responsibility to certify and train raters and maintain quality control over field verification and diagnostic testing required for compliance with the standards. In California, currently certified HERS providers are California Home Energy Efficiency Rating System (CHEERS) and California Certified Energy Rating & Testing Services (CalCERTS).

2.4.7 HERS Rater

The HERS rater is a person certified by an Energy Commission-approved HERS provider to perform the necessary field verification and diagnostic testing required for demonstrating compliance with the standards. HERS raters have special training in diagnostic techniques and building science and are capable of identifying problems while the home is still under construction. As long as the documentation author is not an employee of the builder or subcontractor whose work they are verifying, they can also act as the HERS rater.

The HERS rater is responsible for completing and signing the field verification and/or diagnostic testing certificate (CF-4R).

Example 2-5

Question

May a certified HERS rater, who does the field verification and completes and signs the CF-4R, do the testing required for the builder or installer to certify compliance with Title 24 installation requirements on the CF-6R?

Answer

Yes. This approach only works where the certified HERS rater is doing field verification for every house. It is not allowable in the case where the HERS rater is doing field verification only on a sample of homes. The builder or the installer must sign the CF-6R certifying compliance. The HERS rater may not sign the CF-6R. However, the builder or installer can rely on the HERS rater's diagnostic test results when the builder or installer signs the certification statement on the CF-6R. Of course, if the HERS rater determines that the compliance requirements are not met, the builder or installer may not sign the CF-6R until action is taken to make whatever corrections are necessary. Once corrections have been made, and the HERS rater determines that all compliance requirements are met, the builder or installer may certify the work by completing and signing the applicable section of the CF-6R. The rater then must complete and sign the CF-4R for this building.

Note that the HERS rater must complete diagnostic testing and field verification (as documented and certified on the CF-4R) after the measure is completely installed. For duct sealing, drywall must be completely installed before testing. A builder may contract with a certified HERS rater to complete testing at rough-in for quality control purposes, but such testing is not sufficient for meeting compliance requirements and certifications on the CF-4R.

2.4.8 Owner

Building owner means the owner of the dwelling unit. In the context of production homes, the owner is the person or family that the builder sells the house to. In custom homes and remodels, the owner may be the "builder" or developer and a general contractor, architect, engineer, etc. may be in their employment.

As part of the compliance process, the owner must receive a homeowner's manual at the time of occupancy.

Example 2-6

Question

What is my responsibility with respect to the CF-6R (Installation Certificate) (a) as an inspector and (b) as a builder?

Answer

The building inspector is responsible for checking the CF-6R at appropriate inspections to be sure it is filled out and signed for the completed work. Inspectors can verify that the installed features are "consistent with approved plans," as indicated on the Certificate of Compliance (CF-1R) form. Since the CF-6R may be posted at the job site or kept with the building permit, the inspector can request that this form be made available for each appropriate inspection. It is not advisable to wait until the final inspection to check the CF-6R (§10-103).

The general contractor, or his/her agent (such as the installing contractor), takes responsibility for completing and signing the form for the work performed. (A homeowner acting as the general contractor for a project may sign the CF-6R.) The compliance statement for their signature indicates that the equipment or feature: 1) is what was installed; 2) is equivalent or more efficient than required by the approved plans (as indicated on the CF-1R); and 3) meets any certification or performance requirements (§10-103).

Example 2-7

Question

I heard that there are conflict-of-interest requirements that HERS raters must abide by when doing field verification and diagnostic testing. What are these requirements?

Answer

HERS raters are expected to be objective, independent, third parties when they are fulfilling their duties as field verifiers and diagnostic testers. In this role they are serving as special inspectors for local building departments. By law HERS raters must be independent entities from the builder or subcontractor installer of the energy efficiency features being tested and verified. They can have no financial interest in the installation of the improvements. HERS raters can not be employees of the builder or subcontractor whose work they are verifying. Also, HERS raters cannot have any financial interest in the builder's or contractor's business or advocate or recommend the use of any product or service that they are verifying. Section 106.3.5 of the CBC prohibits a special inspector from being employed (by contract or other means) by the contractor who performed the work that is being inspected.

The Energy Commission expects HERS raters to enter into a contract with the builder (not with sub-contractors) to provide independent, third-party diagnostic testing and field verification, and the procedures adopted by the Energy Commission calls for direct reporting of results to the builder, the HERS provider, and the building official. Although the Energy Commission does not recommend it, a "three-party contract" with the builder is possible, provided that the contract delineates both the independent responsibilities of the HERS rater and the responsibilities of a sub-contractor to take corrective action in response to deficiencies that are found by the HERS rater. Such a "three-party contract" may also establish a role for a sub-contractor to serve as contract administrator for the contract, including scheduling the HERS rater, invoicing, and

payment provided the contract ensures that monies paid by the builder to the HERS rater can be traced through audit. It is critical that such a "three-party contract" preserves rater independence in carrying out the responsibilities specified in Energy Commission-adopted field verification procedures. Even though such a "three-party contract" is not on its face in violation of the requirements of the Energy Commission, the closer the working relationship between the HERS rater and the sub-contractor whose work is being inspected, the greater the potential for compromising the independence of the HERS rater.

CHEERS and CalCERTS have been approved by the Energy Commission to serve as HERS providers to certify and oversee HERS raters throughout the state. These providers are required to provide ongoing monitoring of the propriety and accuracy of HERS raters in the performance of their duties and to respond to complaints about HERS rater performance. In cases where there may be real or perceived compromising of HERS rater independence, they are responsible for providing increased scrutiny of the HERS rater, and taking action to ensure objective, accurate reporting of diagnostic testing and field verification results, in compliance with Energy Commission adopted procedures.

Building officials have authority to require HERS raters to demonstrate competence, to the satisfaction of the building official. Building officials should place extra scrutiny on situations where there may be either real or perceived compromising of the independence of the HERS rater, and exercise their authority to disallow a particular HERS rater from being used in their jurisdiction or disallow HERS rater practices that the building official believes will result in compromising of HERS rater independence.

2.5 Field Verification and/or Diagnostic Testing

This section describes some of the procedures and requirements for field verification and/or diagnostic testing of energy efficiency features. This section is just an overview; details are available in the documents described below.

Field verification and/or diagnostic testing are performed by special third-party inspectors. The Energy Commission has given this responsibility to the HERS raters, who are specially trained and certified to perform these services. HERS raters cannot be employees of the builder or contractor whose work they are verifying. Also HERS raters cannot have financial interest in the builder's or contractor's business or advocate or recommend the use of any product or service that they are verifying.

2.5.1 Measures Requiring Field Verification and/or Diagnostic Testing

The following features require field verification and/or diagnostic testing:

- Duct sealing
- Supply duct location, surface area and R-factor
- Refrigerant charge in split system air conditioners and heat pumps
- Installation of TXV
- Adequate air flow

- Air handler fan power
- High energy efficiency ratio (EER)
- Maximum cooling capacity
- Building envelope sealing
- High quality insulation installation.

Field verification and testing is only required when measures or equipment are installed that require field verification and/or testing. If such measures or equipment are not installed, then field verification and testing is not required. For example, if there are no air distribution ducts or no new ducts in the case of additions, then no testing of ducts is required. Similarly, if there is no split system air conditioner or heat pump in a building using package C or D for compliance, then it is not necessary to diagnostically test the refrigerant charge.

2.5.2 Sampling

At the builder's option, HERS field verification and diagnostic testing may be completed either for each dwelling unit or for a sample of dwelling units. Sampling is permitted only when multiple dwelling units of the same type are constructed within the same subdivision by the same specialty contractors.

With the sampling approach, the HERS rater tests the first home for each model. As additional homes of the same model are constructed, the builder shall identify a group of up to seven dwelling units from which a sample will be selected for testing and the HERS provider is notified. The HERS rater then randomly selects at least one dwelling unit from the group and performs the tests on that unit. If the sampled unit passes, then all homes in the group are deemed to pass the tests.

If a sampled home fails, the HERS rater shall determine whether the failure was unique or that the rest of the dwelling units are likely to have similar failings. If the failing is considered unique, then the HERS rater chooses at random another house from the sample and performs tests on that house.

If the second house fails, then the builder is required to take corrective action in all unoccupied dwelling units in the group that have not been tested. The builder may also choose another path to compliance that does not involve a feature requiring field verification and/or diagnostic testing.

For multifamily buildings, variations in exterior surface areas caused by location of dwelling units within the building shall not cause dwelling units to be considered a different model for the purpose of sampling.

2.5.3 For More Information

More detail on field verification and/or diagnostic testing is provided in the *2005 Residential ACM Manual*, as described below:

- Chapter 7 of Residential ACM, Home Energy Rating Systems (HERS) Required Field Verification And Diagnostic Testing, has detailed procedures on who can perform third-party inspections, the type of inspections that can be performed, and procedures for sampling.
- Appendix ACM RC-2005 has procedures for testing air distribution ducts.
- Appendix ACM RD-2005 has procedures for verifying refrigerant charge.
- Appendix ACM RE-2005 has procedures for testing fan flow and fan power.
- Appendix ACM RF-2005 has procedures for HVAC sizing.
- Appendix ACM RH-2005 has procedures for high quality insulation installation.
- Appendix ACM RI-2005 has procedures for verifying air conditioning features such as thermal expansion valves and high EER ratings.

Example 2-8

Question

How does the sampling procedure for diagnostic testing for air distribution ducts apply to multifamily buildings?

Answer

If the builder chooses to do sampling, then the sampling is done on a dwelling unit basis. Under sampling, first a determination needs to be made of how many different types of dwelling units there are in the development.

For multi-family buildings, variations in exterior surface areas caused by location of dwelling units within the building do not cause dwelling units to be considered a different model. In this dwelling unit, the duct system associated with every HVAC unit in this dwelling unit must be tested. After that a sample of the remaining dwelling units must be tested, according to the procedure in Section 7.5 of the *2005 Residential ACM Manual*. In a dwelling unit that is to be tested in sampling, the duct system associated with every HVAC unit in that dwelling unit must be tested. No duct systems have to be tested in dwelling units that are not selected for sampling. In other words this is a sampling of dwelling units within buildings. Testing must be done on every duct system in a dwelling unit regardless of whether it appears that the HVAC and duct system are in conditioned space or not. This is akin to a single family residence with one HVAC unit serving upstairs with ducts in the attic and another serving downstairs with ducts between floors. For this single family counterpart case, both duct systems must be tested to get the duct sealing compliance credit.

The duct pressurization test has no way to determine if leakage is to outside or to inside. So, through this T-24 test there is no way to determine if the "plenum" which contains the ducts communicates to outside or not.

Also, "inside" and "outside" for leakage purposes is not defined by the locations of walls or the number of stories. The boundary between inside and outside for leakage purposes, is defined by the air boundary, typically drywall, between inside and outside. Spaces between floors and spaces in walls (including interior walls) are often "outside" from an air leakage perspective because they are not sealed effectively to form an air barrier and communicate to the outside.

Duct insulation is not required for ducts in conditioned space because there is an expectation that there will be reduced conduction losses for these ducts. But to get full credit for ducts in conditioned space, duct leakage must be tested and meet the requirements for duct sealing. In a multifamily building in order for compliance credit to be taken for ducts in conditioned space, all of the duct systems in the building must be in conditioned space unless compliance is documented for each dwelling unit separately. To meet the mandatory requirements all HVAC units must have ducts made of UL 181 approved materials (i.e., cased coils). Coils enclosed by sheetrock do not meet the mandatory requirements.

3. Building Envelope Requirements

The building envelope is responsible for the most significant loads that affect heating and cooling energy use. The principal components of heating loads are building envelope infiltration as well as conduction losses through building envelope components – including walls, roofs, floors, slabs, windows and doors. Solar gains through the windows dominate cooling loads in conditioned buildings, but loads through the ceiling/roof and walls are also significant.

3.1 Overview

3.1.1 Introduction

The Standards have both mandatory measures and prescriptive requirements that affect the design of the building envelope. The mandatory measures and prescriptive requirements establish a minimum performance level, which can be exceeded by other compliance options and construction practices resulting in greater energy savings.

Common strategies for exceeding the minimum energy performance level include the use of better components such as more insulation, higher efficiency windows, housewrap, radiant barriers and higher efficiency heating, cooling and water heating equipment.

Design and construction practice options are discussed later in this chapter.

Those compliance options that are recognized for credit in the performance approach are called *compliance options*. Compliance options have eligibility criteria that must be satisfied before compliance credit is offered. Design options that save energy but for which there is no compliance credit are also discussed.

For the building envelope, field verification and diagnostic testing procedures exist for insulation quality and for reduced infiltration, and both are compliance options. Field verification and diagnostic testing is a way to ensure that the energy efficiency that shows up in the calculations and on the plans makes its way to the homeowner.

Following this overview, this chapter is organized by building system or building envelope component, as follows:

- Fenestration, including windows, doors, and skylights
- Insulation
- Thermal mass
- Infiltration and air leakage
- Vapor barriers and moisture protection.

Within each of these sections, the material is generally organized as follows:

- Mandatory measures
- Prescriptive requirements
- Compliance options
- Compliance and enforcement.

3.1.2 Building Orientation

The following definitions of east-, north-, west-, and south-facing apply only to the prescriptive packages and master plans analyzed according to the multiple orientation. In the computer methods the actual building orientation must be used, except in the case of master plans as stated above.

East-Facing

"East-facing is oriented to within 45 degrees of true east, including 45°0'0" south of east (SE), but excluding 45°0'0" north of east (NE)." [§101]

The designation “East-Facing” is also used in production buildings using orientation restrictions (e.g., Shaded Areas: East-Facing).

North-Facing

"North-facing is oriented to within 45 degrees of true north, including 45°0'0" east of north (NE), but excluding 45°0'0" west of north (NW)." [§101]

South-Facing

"South-facing is oriented to within 45 degrees of true south, including 45°0'0" west of south (SW), but excluding 45°0'0" east of south (SE)." [§101]

The designation “South-Facing” is also used in production buildings using orientation restrictions (e.g., Shaded Areas: East-Facing).

West-Facing

"West-facing is oriented to within 45 degrees of true west, including 45°0'0" due north of west (NW) but excluding 45°0'0" south of west (SW)." [§101]

The designation “West-Facing” is also used in production buildings using orientation restrictions (e.g., Shaded Areas: West-Facing).

3.1.3 What’s New for 2005

With the 2005 update to the Standards, the maximum fenestration area was modified, credit is offered for insulation construction quality, and high performance replacement windows are required in existing homes.

Fenestration

Package D requirements for glazing area were modified. Prior to 2005, the maximum glazing area that was permitted depended on climate zone. Along the coast, fenestration area was limited to 20% of the conditioned floor area (CFA), where in other California climate zones the limit was 16% of the CFA.

With the 2005 update, the Standards were changed to have a consistent fenestration area of 20% of the CFA in all California climate zones. For the west-facing glass a maximum of 5% of the floor area in climate zones 2, 4, and 7-15. West-facing fenestration area includes skylights tilted to the west or tilted in any direction when the pitch is less than 1:12. See §151(f) 3 C and in Section 3.2.3 of this chapter.

With the 2005 Standards, there is no longer a credit for reducing window area below the prescriptive limit of 20%. This approach is similar to the Standards for nonresidential buildings that have been in force since 1992. This change does not mean that the Energy Commission believes that reducing fenestration area will not save energy, but that window area is really more of an amenity, like floor area itself, and should not be treated as a conservation measure.

One of the significant impacts of making fenestration area neutral is that the standards become significantly more stringent for multifamily buildings and for other low-rise buildings that typically have small glass area. Multifamily buildings typically have fenestration areas in the range of 12% to 15% of the floor area. Prior to the 2005 update, when the performance method was used, a considerable credit was available based on the difference between the fenestration area in the building and the fenestration area allowed by the 2001 standards (either 16% or 20%). This credit allowed trade-offs and therefore resulted in lesser energy efficiency features installed in buildings.

The U-factors (default and required) of fenestration products were modified with the 2005 update, but these changes do not represent a change in stringency. The National Fenestration Rating Council (NFRC) rating procedure for windows was changed, resulting in the same window having a slightly lower U-factor. This change brings the requirements in line with the test results. A window that complied with the 2001 standards will still comply with the 2005 standards; both the criteria and the rated value are slightly lower.

Insulation Installation Quality

Another significant change with the 2005 update is that credit is offered for improving the quality of insulation installation. This credit, which is available only with the performance approach, requires third-party verification. The quality of the installation has a significant impact on thermal performance. Three problems can be created by improper installation: when insulation is not in contact with the air barrier(s), an air space can be created that in effect “short circuits” the effectiveness of the insulation; gaps or voids in the insulation can lead to significant portions of the wall, roof or floor being essentially not insulated; and compression of the insulation, usually around pipes or other building services

embedded in wall, ceiling, or floor cavities, can degrade insulation performance. A third-party inspection protocol is provided in the Standards.

Replacement Windows

Replacement windows in low-rise residential buildings must comply with the prescriptive requirements. This 2005 change is expected to save considerable energy as the window replacement market in California is quite large. The Commission's impact report for the Standards estimates that 25,000 homes in California have new windows installed each year. Each time windows are replaced, the average per-house savings are over 300 kilowatt-hours/year (kWh/yr) of electricity and 15 therms/yr of gas.

Walls

For compliance with the 2005 Standards, custom U-factor calculations for walls, roofs, and floors are no longer allowed. Instead, the U-factors for all construction assemblies are in the lookup tables of the Joint Appendices, Appendix IV. This change is intended to simplify enforcement and reduce the likelihood of errors or inconsistencies in U-factor calculations.

3.2 Fenestration

Windows, glazed doors, and skylights have a significant impact on energy use in a home. They may account for up to 50% of residential space heating loads, and for homes that are air-conditioned, up to 50% of the cooling load. The size, orientation, and types of fenestration products can dramatically affect the overall energy performance of a house. Glazing type, orientation, and shading not only play a major role in the building's energy use but can affect the operation of the HVAC system and the comfort of the occupants.

3.2.1 Relevant Sections in the Standards

The Standards deal with fenestration in several ways and in several places:

- Section 10-111 (Administrative Standards) establishes the rules for rating and labeling fenestration products and establishes the NFRC as the supervising authority.
- Section 116(a)1 sets air leakage requirements for all manufactured windows whether they are used in residential or nonresidential buildings.
- Sections 116(a)2 and 3 require that the U-factor and the solar heat gain coefficient (SHGC) for manufactured fenestration products be determined using NFRC procedures.
- Section 116(a)4 requires that manufactured fenestration products have both a temporary and permanent label. The temporary label shall show both the U-factor and the SHGC and

verify that the window complies with the air leakage requirements.

- Section 116(b) has default U-factors and SHGC values that are to be used for field-fabricated fenestration and exterior doors that do not have an NFRC rating.
- Section 117 requires that openings around windows and doors be caulked, gasketed, or otherwise sealed to limit air leakage.
- Sections 151(f)3 and 4 have the prescriptive requirements for fenestration in low-rise residential buildings. These include requirements for maximum glazing area, maximum U-factor, and for some climate zones, a maximum SHGC requirement.
- Section 152(a) sets the fenestration area requirements for residential additions and requires that new windows meet the prescriptive requirements.
- Section 152(b) establishes that replacement windows in existing residences meet the prescriptive requirements. Performance compliance options (existing plus alteration) are also available.

3.2.2 Mandatory Measures

The Standards define three types of fenestration products that face different mandatory measures:

- Manufactured products are delivered pre-assembled from the factory. This is the most common type of fenestration in residential construction.
- Site-built products are glazed or assembled on site using factory prepared systems. These are more common in nonresidential construction and include storefront and curtainwall systems. The glazing contractor may also pre-assemble site-built fenestration at his or her shop before final installation.
- Field-fabricated products are built on site using standard dimensional lumber or other materials not intentionally prepared for use as a fenestration product.

Complete definitions can be found in the Joint Appendices, Appendix I.

Air Leakage

§116(a)1

Manufactured Fenestration Products. Manufactured fenestration products, including exterior doors, must be tested and certified to leak not more than 0.3 cubic feet per minute (cfm) per ft^2 of window area. For a window that has an area of 10 ft^2, the maximum leakage would be 10 ft^2 times 0.3 cfm/ft^2 or a total leakage of 3 cfm. This is equal to about 86 in^3 per second or about a quart and a half of air each second. This mandatory measure applies to all manufactured windows whether they are used in new residential or nonresidential buildings.

To determine leakage, the test procedure that manufacturers use is either NFRC 100 or ASTM E283, which are essentially the same.

Site-built Products. There are no specific air leakage requirements for site-built fenestration products.

Field-fabricated Products. No testing is required for field-fabricated fenestration products; however, the Standards require limiting air leakage through weatherstripping and caulking.

Exterior Doors. Exterior doors must meet the following requirements:

- Manufactured exterior doors must be certified as meeting an air leakage rate of 0.3 cfm/ft² of door area [§116(a)1], which is the same as windows.
- They must comply with the requirements of §117, as described below in "Joints and Other Openings," e.g., they must be caulked and weatherstripped if field-fabricated.
- Any door that is more than one-half glass is a fenestration product and must comply with the mandatory measures and other Standards requirements for fenestration products.

U-factor and SHGC Ratings

§116(a)2 and §116(a)3
Table 116-A
Table 116-B

Manufactured Fenestration Products. The mandatory measures require that both the U-factor and the SHGC of manufactured fenestration products be determined from NFRC's Certified Product Directory or from Energy Commission-approved default tables. At the time of inspection, the actual fenestration U-factor and SHGC values as shown on NFRC labels or in the default tables must result in equal or lower overall energy consumption than the values indicated on the compliance documents. The default U-factors are contained in Standards Table 116-A, and the default SHGC values are contained in Standards Table 116-B (also in Appendix B of this compliance manual). A directory of NFRC certified ratings is available at http://www.NFRC.org.

Commission default values in both Tables 116-A and 116-B are on the poor side of the performance range for windows. To get credit for advanced window features such as low-e (low-emissivity) coatings and thermal break frames, the window manufacturer must have the window tested, labeled, and certified according to NFRC procedures. Figure 3-1 shows an example of an NFRC-approved temporary fenestration label.

Figure 3-1 – NFRC Temporary Label

Requiring that SHGC and U-factor be calculated using a common procedure ensures that the performance data for fenestration products are more accurate and that data provided by different manufacturers can be more easily compared. The test procedure for U-factor is NFRC 100, and the test procedure for SHGC is NFRC 200.

Site-built Fenestration Products. For low-rise residential construction, site-built products are treated the same as manufactured products: U-factor and SHGC values must come from NFRC ratings or from Standards Tables 116-A and 116-B. Note that different default values apply to nonresidential projects; default values may be found in the Nonresidential ACM Manual.

Field-fabricated Products [§116(b)]. Field-fabricated fenestration must always use the Energy Commission default U-factors from Standards Table 116-A and SHGC values from Standards Table 116-B.

For non-field-fabricated products, acceptable methods of determining U-factor are shown in Table 3-1. Acceptable methods of determining SHGC are shown in Table 3-2.

Table 3-1 – Allowable Methods for Determining U-factors

		Fenestration Category	
U-factor Determination Method	Manufactured Windows	Site-Built Fenestration	Field-Fabricated Fenestration
NFRC-100	✓	✓	
Table 116-A	✓	✓	✓

Table 3-2 – Methods for Determining Solar Heat Gain Coefficients

		Fenestration Category	
SHGC Determination Method	Manufactured Windows	Site-Built Fenestration	Field-Fabricated Fenestration
NFRC-200	✓	✓	
Table 116-B	✓	✓	✓

Temporary and Permanent Labels

See §10-111(a) and §116(a)4

Manufactured Fenestration Products. The Standards require that manufactured windows have both temporary and permanent labels that show the NFRC performance characteristics. The temporary label shows the U-factor and SHGC, for each rated window. The label must also show that the window meets the air infiltration criteria. The temporary label must not be removed before inspection by the enforcement agency.

The permanent label must, at a minimum, identify the certifying organization and have a number or code to allow tracking back to the original information on file with the certifying organization. The permanent label can be inscribed on the spacer, etched on the glass, engraved on the frame, or otherwise located so as not to affect aesthetics.

Site-Built Fenestration Products. Labeling requirements apply to site-built fenestration products as well, except that a label certificate may be provided in accordance with NFRC 100 in place of an attached temporary label. The label certificate is a document that verifies the performance of the site-built fenestration product but that is not physically attached to the product. The label certificate is kept at the job site by the contractor for field inspector verification.

Field-Fabricated Fenestration Products. A label is not required for field-fabricated fenestration products.

Example 3-1

Question

My home will have a combination of window types, including fixed, operable, wood, metal, etc., some of which are field-fabricated. What are the options for showing compliance with the Standards?

Answer

For field-fabricated windows, you must select U-factors and SHGC values from the default tables (Tables 116-A and 116-B from the Standards). Windows that are not field-fabricated

must be labeled, either with an NFRC label or with a manufacturer's label that certifies the window to have a U-factor and SHGC from the default tables (again, Tables 116-A and 116-B). The manufacturer must label the window in accordance with Section 116(a)4. If the U-factors or SHGC values do not comply with the prescriptive requirements, the performance method must be used (see Chapter 7). To simplify data entry into the compliance software, you may choose the U-factor from Table 116-A that is the highest of any of the windows and use this for all windows. However, you must use the appropriate SHGC from Table 116-B for each window type individually.

Example 3-2

Question

When windows are labeled with a default value, are there any special requirements that apply to the label?

Answer

There are two criteria that apply to fenestration products labeled with default values. First, the Administrative Regulations (§10-111) require that the words "CEC Default U-factor" and "CEC Default SHGC" appear on the temporary label in front of or before the U-factor or SHGC (i.e., not in a footnote). Second, the U-factor and SHGC for the specific product must be listed. If multiple values are listed on the label, the manufacturer must identify, in a permanent manner, the appropriate value for the labeled product. Marking the correct value may be done in the following ways only:

Circle the correct U-factor and SHGC (permanent ink);

Black out all values except the correct U-factor and SHGC (permanent ink); or

Make a hole punch next to the appropriate values.

Example 3-3

Question

What U-factor do I use for glass block? What solar heat gain coefficient do I use for clear glass block? Does it need a label?

Answer

For hollow glass block, use the U-factor and SHGC values from Standards Tables 116-A and 116-B for double-pane glass for the frame type in which the glass blocks are installed. The worst-case scenario would be a metal-framed glass block that is the same as a metal-framed window or a metal fixed frame. The U-factor for framed hollow glass block is therefore 0.71. The SHGC depends on whether the glass block is tinted. For this example, the glass block is clear, therefore the SHGC is 0.73. Glass block is considered a field-fabricated product and therefore does not need a label.

Example 3-4

Question

Is there a default U-factor for the glass in sunrooms?

Answer

Yes. For the horizontal or sloped portions of the sunroom glazing, use the U-factor for skylights. For the vertical portions, use the U-factors for either fixed windows, operable windows, or doors, as appropriate. As a simplifying alternative, the manufacturer may label the

entire sunroom with the highest U-factor of any of the individual fenestration types within the assembly.

Example 3-5

Question

How are French doors treated in compliance documentation for U-factor and dimensions? How can I determine a solar heat gain coefficient for French doors when 50% or more of the door area is glass?

Answer

French doors with 50% or more of the door area in glass are defined as fenestration products and are covered by the NFRC Rating and Certification Program. You may use either an NFRC-rated U-factor or a default glazed door U-factor. The fenestration area for compliance documentation is the entire rough opening of the door (not just the glass area).

The SHGC for French doors may be determined in one of two ways:

1. Use the NFRC rated and labeled SHGC.

2. Refer to Standards Table 116-B. The SHGCs in this table have been pre-calculated based upon glazing type and framing type.

French doors with less than 50% glass areas are treated as a door with fenestration installed within the door. Usually the fenestration in the door is treated as a field-fabricated fenestration product.

Example 3-6

Question

As a manufacturer of fenestration products, I place a temporary label with the air infiltration rates on my products. Can you clarify which products must be tested and certified?

Answer

Each product line must be tested and certified for air infiltration rates. Features such as weather seal, frame design, operator type, and direction of operation all affect air leakage. Every product must have a temporary label certifying that the air infiltration requirements are met. This temporary label may be combined with the temporary U-factor label.

Example 3-7

Question

Is a custom window “field-fabricated” for purposes of meeting air infiltration requirements?

Answer

No. Most custom windows are manufactured and delivered to the site either completely assembled or “knocked down,” which means they are a manufactured product. A window is considered field-fabricated when the windows are assembled at the building site from the various elements that are not sold together as a fenestration product (i.e., glazing, framing and weatherstripping). Field-fabricated does not include site-assembled frame components that were manufactured elsewhere with the intention of being assembled on site (such as knocked down products, sunspace kits, and curtain walls).

Example 3-8

Question

What constitutes a “double-pane” window?

Answer

Double-pane (or dual-pane) glazing is made of two panes of glass (or other glazing material) separated by space (generally 1/4" [6 mm] to 3/4" [18 mm]) filled with air or other gas. Two panes of glazing laminated together do not constitute double-pane glazing.

Example 3-9

Question

To get daylight into a room in my new house, I plan on installing a tubular skylight using the performance approach. The skylight has a clear plastic dome exterior to the roof, a single pane ¼-in.-thick acrylic diffuser mounted at the ceiling, and a metal tube connecting the two. How do I determine the U-factor and SHGC that I will need to determine if I can comply with the Standards?

Answer

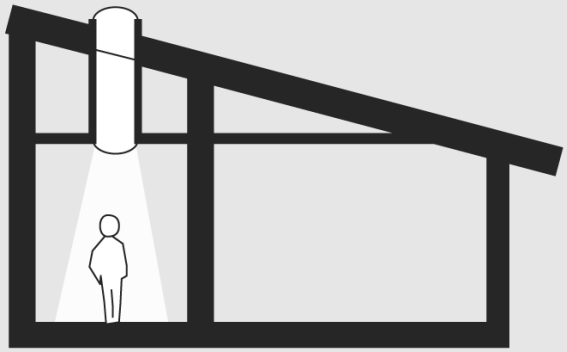

Tubular skylights are an effective means for bringing natural light into interior spaces. As a manufactured product, tubular skylights must have a temporary label.

There are three methods available for determining the U-factor for tubular skylights. The first is to use the default U-factor from Standards Table 116-A. This tubular skylight would be considered a metal frame, single-pane skylight resulting in a U-factor of 1.72, which must appear on a label preceded by the words “CEC Default U-factor.” (A tubular skylight would have to have two panes of glazing with an air space of less than two inches (50 mm)s between them at the plane of the ceiling insulation for it to be considered double-pane.)

The second method is to determine the U-factor from the Nonresidential ACM Manual, Appendix NI, Table NI-1. The U-factor for this tubular skylight is the value under Unlabeled Skylight without Curb, in the column for Aluminum without Thermal Break and the row for Single Glazing, ¼-in. Acrylic/polycarb, resulting in a U-factor of 1.21. This must appear on a label stated as “CEC Default U-factor 1.21.”

The third and best method, applicable if the skylight has been tested and certified pursuant to NFRC procedures, requires a label that states, “Manufacturer stipulates that this rating was determined in accordance with applicable NFRC procedures NFRC 100” followed by the U-factor.

There are two methods available for determining SHGC. The first is to use the default table SHGC in Standards Table 116-B. This tubular skylight would be considered a metal frame, fixed, clear, single-pane product resulting in an SHGC of 0.83, which must appear on a label stated as “CEC Default SHGC 0.83.”

The second method, applicable if the skylight has been tested and certified pursuant to NFRC procedures, requires a label that states, “Manufacturer stipulates that this rating was determined in accordance with applicable NFRC procedures NFRC 200 including Addendum A” followed by the skylight’s SHGC.

This second method for determining SHGC values is a relatively recent occurrence. Effective October 18, 2003, tubular daylight devices can be tested and labeled for SHGC in accordance with "NFRC 200, Procedure for Determining Fenestration Product Solar Heat Gain Coefficient and Visible Transmittance at Normal Incidence."

3.2.3 Prescriptive Requirements

Prescriptive requirements described in this chapter typically refer to Package D. For a list of Package C features, refer to Table 151-B of the Standards (also in Appendix B of this document).

The prescriptive requirements specify a maximum U-factor, and in climate zones where air conditioning is common, a maximum SHGC. In addition, the prescriptive requirements limit total glass area to a maximum of 20% of the conditioned floor area and west-facing glass to a maximum of 5% of the conditioned floor area in climate zones 2, 4, and 7-15. West-facing fenestration area includes skylights tilted to the west or tilted in any direction when the pitch is less than 1:12 (§151(f)3C).

Fenestration U-factor

The maximum U-factor is 0.55 for climate zone 16 (the mountain areas with cold winters). In climate zones 3 through 9 (the coastal zones), the maximum U-factor is 0.67. In other climate zones, including the central valley and the desert, the maximum U-factor is 0.57.

When using the prescriptive criteria, some windows may exceed the prescriptive requirement as long as the area-weighted average U-factor meets the requirement. Decorative or stained glass is an example that might not meet the prescriptive requirements unless weight-averaged with other fenestration. To calculate weight-averaged U-factors for prescriptive envelope compliance, see Form WS-2R in Appendix A of this manual.

The U-factor criterion applies to both windows and skylights. Most skylights are mounted on a curb, and the U-factor of such skylights according to NFRC procedures includes heat loss through a standardized portion of curb included in the tests. NFRC 100 includes the following:

If a skylight can be installed using more than one of the installation methods listed below, the skylight product line shall include all the pertinent options as individual products. The method in which a skylight is mounted will affect its U-factor. Mounting variations include these:

1. Inset Mount, where the curb of the skylight extends into the rough opening on the roof;
2. Curb Mount, where the outside of the curb is equal to the rough opening in the roof; and
3. Curb mount, where the inside of the curb is equal to the rough opening in the roof.

NRFC 100 also states the following:

- Curb mounted skylights that do not have an attached integral curb when manufactured shall be simulated and tested installed on a nominal 2 x 4 (actual size 40.0 mm x 90.0 mm or 1.5 in. x 3.5 in.) wood curb made from Douglas Fir, with no knots.
- The heat transfer characteristics of site-built curbs are not included in the NFRC rating and must be modeled as a part of the opaque building envelope. For compliance purposes with the low-rise residential standards, the U-factor for a skylight rated with any of the three mounting variations described above is applied to the area of the rough opening.

U-factors for skylights are therefore significantly higher than they are for windows, even when the construction of the skylight and the window are similar. This means that skylights will not generally comply with the prescriptive requirements, and any building that uses skylights will be forced to use the performance approach unless weight-averaging with other fenestration is used.

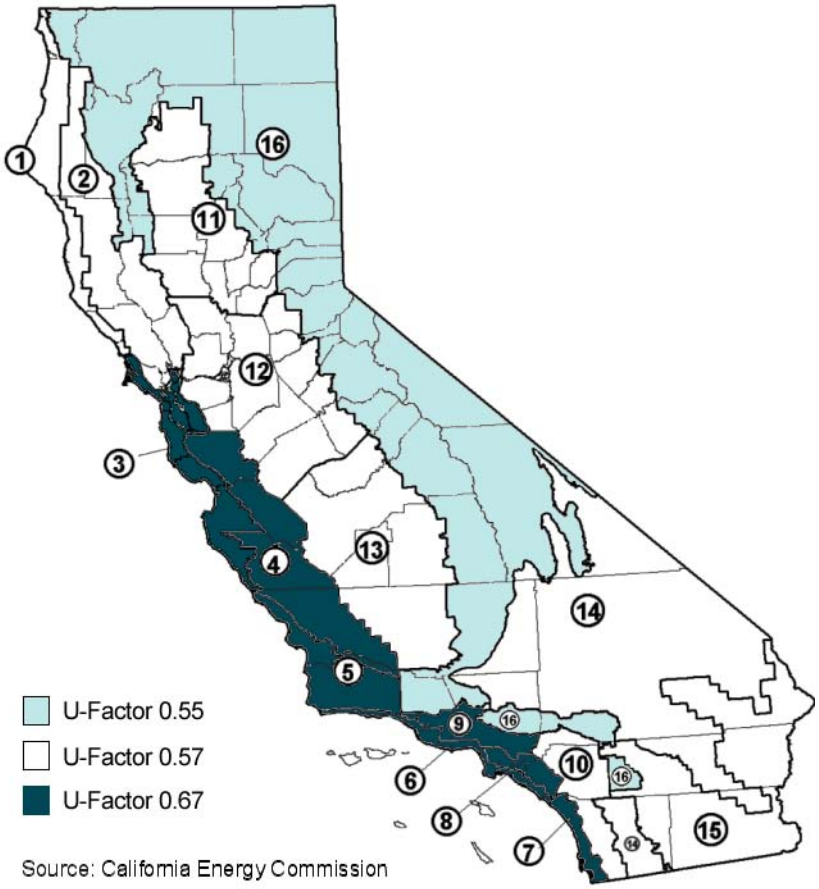

Figure 3-2 – Package D Prescriptive Fenestration U-factor Limits by Climate Zone

Table 3-3 – Maximum U-factors by Climate Zone in Packages C and D

Package C											
Climate Zone	1, 16	3	4	5	6	7	8, 9	10	2, 11-13	14	15
Maximum U-factor[2]	0.42	0.42	0.38	0.42	0.42	0.38	0.38	0.38	0.38	0.38	0.38

Package D																
Climate Zone	1	2	3	4	5	6	7	8	9	10	11	12	13	14	15	16
Maximum U-factor[2]	0.57	0.57	0.67	0.67	0.67	0.67	0.67	0.67	0.67	0.57	0.57	0.57	0.57	0.57	0.57	0.55

SHGC

The standards set a maximum SHGC of 0.40 for homes constructed in climate zones 2, 4, and 7 through 15. These are the climate zones where homes are more likely to be air conditioned. This requirement applies to the fenestration product without consideration of insect screens or interior shading devices. Other than skylights, the SHGC of windows and doors can be weight-averaged to meet the prescriptive requirement. West-facing glazing may not be averaged with non-west facing glazing. Weight-averaging must be done within the limitations on west-facing area allowance in §151(f)3C. The SHGC of all west-facing glazing may be averaged. The SHGC of all non-west-facing glazing may be averaged. Skylights must meet the SHGC requirement without weight-

averaging. However, the skylight area and required SHGC must be included with calculations of the west-facing area.

A window or fenestration product that meets the SHGC criterion will typically have a special low-e coating that reduces solar gains. The coating also has other benefits, such as reducing the admittance of UV energy, which is the principal cause of fabric fading.

While a low-e coating is the most common way to comply with the SHGC requirements, the Standards offer other options: use an exterior shade screen or louver on the outside of the window or, for south facing windows, use a properly sized overhang. Both sunscreens and overhangs are discussed in the Compliance Options section.

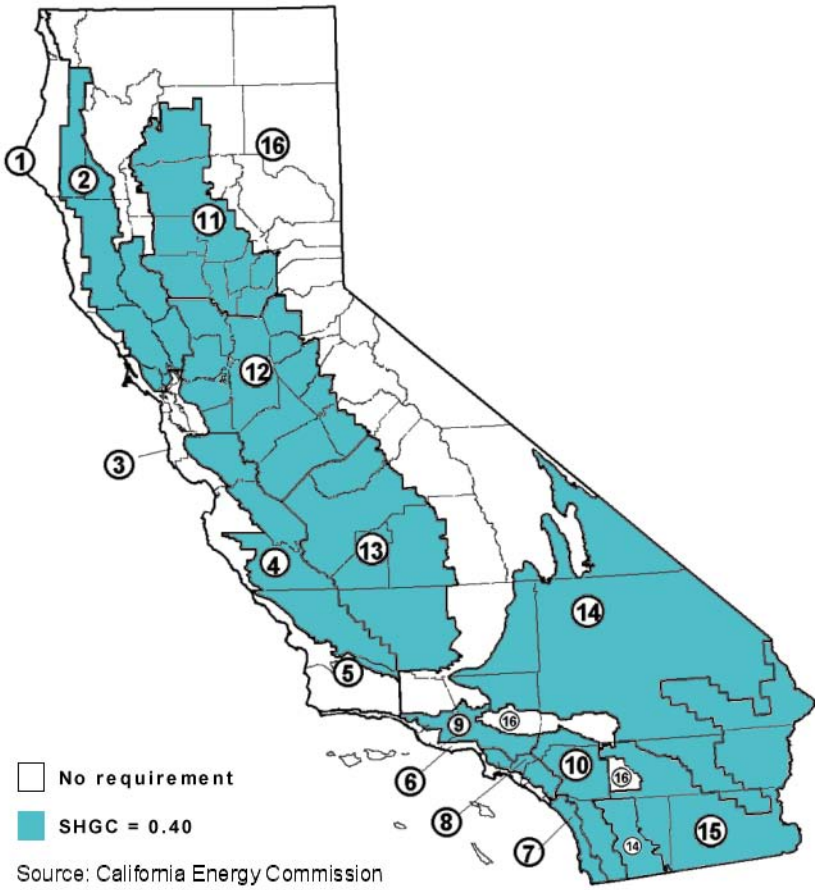

Figure 3-3 – Package C and D SHGC Criteria by Climate Zone

Table 3-4 – Package C and D SHGC Criteria by Climate Zone

Package C											
Climate Zone	1, 16	3	4	5	6	7	8, 9	10	2, 11-13	14	15
Maximum Solar Heat Gain Coefficient (SHGC)[3]	NR	NR	0.40	NR	NR	0.40	0.40	0.40	0.40	0.40	0.40
Maximum total area	14%	14%	14%	16%	14%	14%	14%	16%	16%	14%	16%
Maximum West facing area	NR	NR	5%	NR	NR	5%	5%	5%	5%	5%	5%

Package D																
Climate Zone	1	2	3	4	5	6	7	8	9	10	11	12	13	14	15	16
Maximum Solar Heat Gain Coefficient (SHGC)[3]	NR	0.40	NR	0.40	NR	NR	0.40	0.40	0.40	0.40	0.40	0.40	0.40	0.40	0.40	NR
Maximum total area	20%	20%	20%	20%	20%	20%	20%	20%	20%	20%	20%	20%	20%	20%	20%	20%
Maximum West facing area	NR	5%	NR	5%	NR	NR	5%	5%	5%	5%	5%	5%	5%	5%	5%	NR

Window Area

§101(b)
§151 (f) 3. C.
§ 151 (e)

With the prescriptive requirements, window area is limited to a maximum of 20% of the conditioned floor area in all climate zones. In climate zones 2, 4, and 7 through 15 (the same ones with an SHGC requirement), the window area facing west is limited to a maximum of 5% of the conditioned floor area.

The west-facing area requirement is intended to reduce peak demand, since west-facing windows have more solar gain during the peak cooling period and contribute more to the peak cooling load.

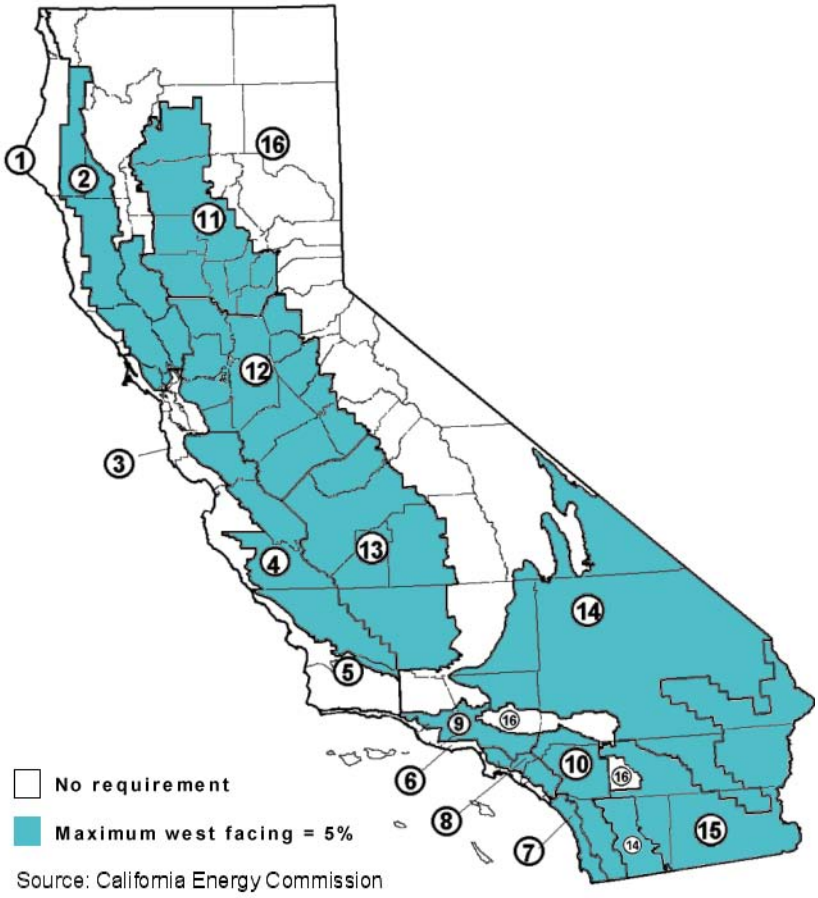

Figure 3-4 – Package C and D Prescriptive West-Facing Window Area Limits by Climate Zone

3.2.4 Compliance Options

While the prescriptive requirements and mandatory measures establish a minimum level of performance, the opportunities to exceed the requirements of the Standards are considerable. Some of these compliance options are discussed in this section. Those compliance options that are recognized for credit through the performance method are called compliance options. Most of the compliance options discussed in this section may be used only with the performance approach, but a few such as exterior shading devices and south facing overhangs may be used to comply with the prescriptive requirements.

Fenestration Area

With the 2005 update to the Standards, no credit is offered through the performance approach for reducing fenestration area below the maximum allowed 20% of the conditioned floor area (CFA).

Data show that the average window area in single family homes is about 17.3% of the CFA. In multifamily buildings, the average window area is about 14.5% of the conditioned floor area. While these are averages, the variations are considerable as shown in Figure 3-5. The reason that some houses have small

fenestration areas and some have large areas, for the most part, has little to do with considerations of energy efficiency. Multifamily buildings have less window area as a percentage of the floor area because the overall floor areas are typically larger, and more space is located in the middle of the building away from fenestration. They also have less exterior wall area per CFA. Larger window areas are desirable for many reasons including letting in natural light and allowing scenic views.

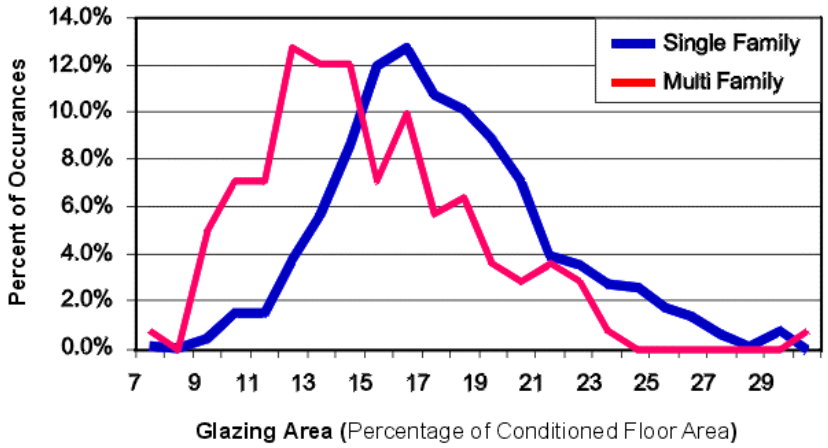

Figure 3-5 – Glass Area in Single Family and Multifamily Residence
(Source: Residential New Construction Database)

Based on data shown in Figure 3-5, and as a matter of policy, the Energy Commission made fenestration area less than or equal to 20% a neutral variable in the performance approach with the 2005 update. The Commission recognizes that area and orientation can have a big impact on energy use, but because these are so variable in buildings, the Commission does not want the energy efficiency of other building components to be eroded in buildings that have small windows because of non-energy reasons.

While there is no credit for window area less than 20% of CFA, there is a penalty for buildings that have a window area that exceeds 20% of CFA. Such buildings are permitted only with the performance approach, where the standard design has a window area equal to the proposed design (up to 20% of the conditioned floor area), and the glass area in the standard design is uniformly distributed among cardinal orientations. The proposed design, on the other hand, has the exact proposed glass area and orientation.

Orientation

Window and skylight orientation has a huge impact on both energy use and peak electric demand. Orientation is a compliance option that is recognized in the performance approach, since the standard design has windows uniformly distributed on the north, south, east, and west sides of the building.

With the 2005 update, the currency used to compare whole building performance is TDV energy. With TDV energy, savings during peak periods are worth more than savings at non-peak times. Window and skylight orientation

was always an important feature and one for which the Standards have always offered a credit. The change to TDV makes window orientation even more important in the context of compliance.

Improved Window Performance

Choosing windows that perform better than the prescriptive requirements earns credit through the performance method. In air conditioning climates, choosing a window with an SHGC lower than 0.40 will reduce the cooling loads compared to the standard design.

The magnitude of the impact will vary by climate zone; in mild coastal climates the benefit to reducing window U-factor will be smaller than in cold mountain climates. Computer compliance programs can be a useful tool to compare the impact of different windows and can help the designer determine when an investment in better windows is worthwhile.

Several factors affect window performance. For windows with NFRC ratings, these performance features are accounted for in the U-factor and SHGC ratings:

- Frame materials, design, and configuration (including cross-sectional characteristics). Fenestration is usually framed in wood, aluminum, vinyl, or composites of these. Frame materials such as wood and vinyl are better insulators than metal. Some aluminum-framed units have thermal breaks that reduce the conductive heat transfer through the framing element as compared with similar units that have no such conductive thermal barriers.
- Number of panes of glazing, coatings, and fill gases. Double-glazing offers opportunities for improving performance beyond the dimension of the air space between panes. For example, special materials that reduce emissivity of the surfaces facing the air space, including low-e or other coatings, improve the thermal performance of fenestration products. Fill gases other than dry air – such as carbon dioxide, argon, or krypton – also improve thermal performance.
- Gap width (i.e., the distance between panes).
- Window type (i.e., casement versus double hung).
- Spacer material (i.e., the type of material separating multiple panes of glass).

Fixed Shading Devices

Shading of windows is also an important compliance option. Overhangs or sidefins that are attached to the building or shading from the building itself are compliance options for which credit is offered through the performance approach. However, no credit is offered for shading from trees, adjacent buildings, or terrain.

Shading devices for which there is credit are those that are a part of the building design. For these, the designer and the builder have control over the measure

and can assure that it will be constructed correctly and will perform properly. Non-credit devices are those that the designer has little or no control over, such as the height of a neighboring house or tree.

Windows that face south can be effectively shaded by overhangs positioned above the window. The ideal overhang is one that provides shade during the months when the building is likely to be in an air conditioning mode and that allows direct solar gains in the heating months. This can be achieved because during the summer the sun is high as it passes over the south side, while in the winter it is low enabling solar radiation to pass beneath the overhang. Due to the potential effectiveness of south-facing overhangs, a prescriptive compliance option is offered. See the following section for details.

Shading is much more difficult on the east and west sides of the house (see Figure 3-6). When the sun strikes these façades it is fairly low in the sky, making overhangs ineffective. Vertical fins can be effective, but they degrade the quality of the view from the window and limit the natural light that can enter. In cooling climates, the best approach is to minimize windows that face east and west. Landscaping features can be considered to increase comfort but cannot be used for compliance credit.

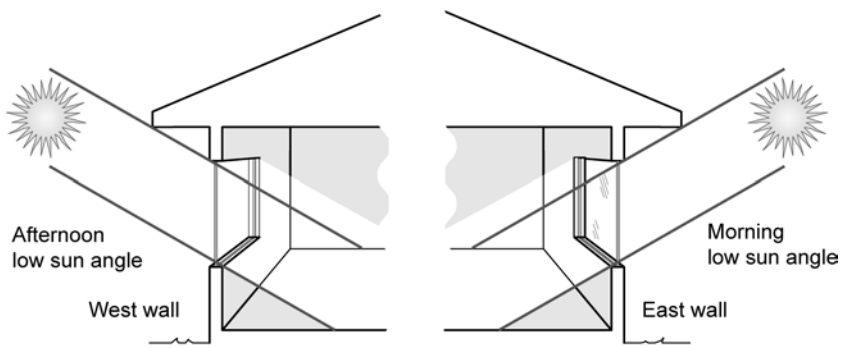

Figure 3-6 – Difficulty of Shading East- and West-Facing Windows

Prescriptive Compliance Using South-Facing Overhangs

A south-facing overhang may be used to meet the prescriptive SHGC criteria in the cooling climates. To qualify, the south overhang must be sized to completely shade the window at solar noon on August 21 and to allow the window to be substantially exposed to solar gains at solar noon on December 21. The minimum and maximum overhang depth that meet these criteria are illustrated in Figure 3-6. It is important to note that windows that do not face directly south will require larger overhangs for complete shading.

Credit is also offered for south facing overhangs with the performance method, but in this case the specific dimensions of the overhang are entered into a qualifying computer program and the benefit of the overhang is calculated for each hour of the day or sun angle. With the performance method, credit is not limited to south facing overhangs, although they are still most effective on this orientation.

When a south facing overhang is used for compliance, it must be shown on the plans.

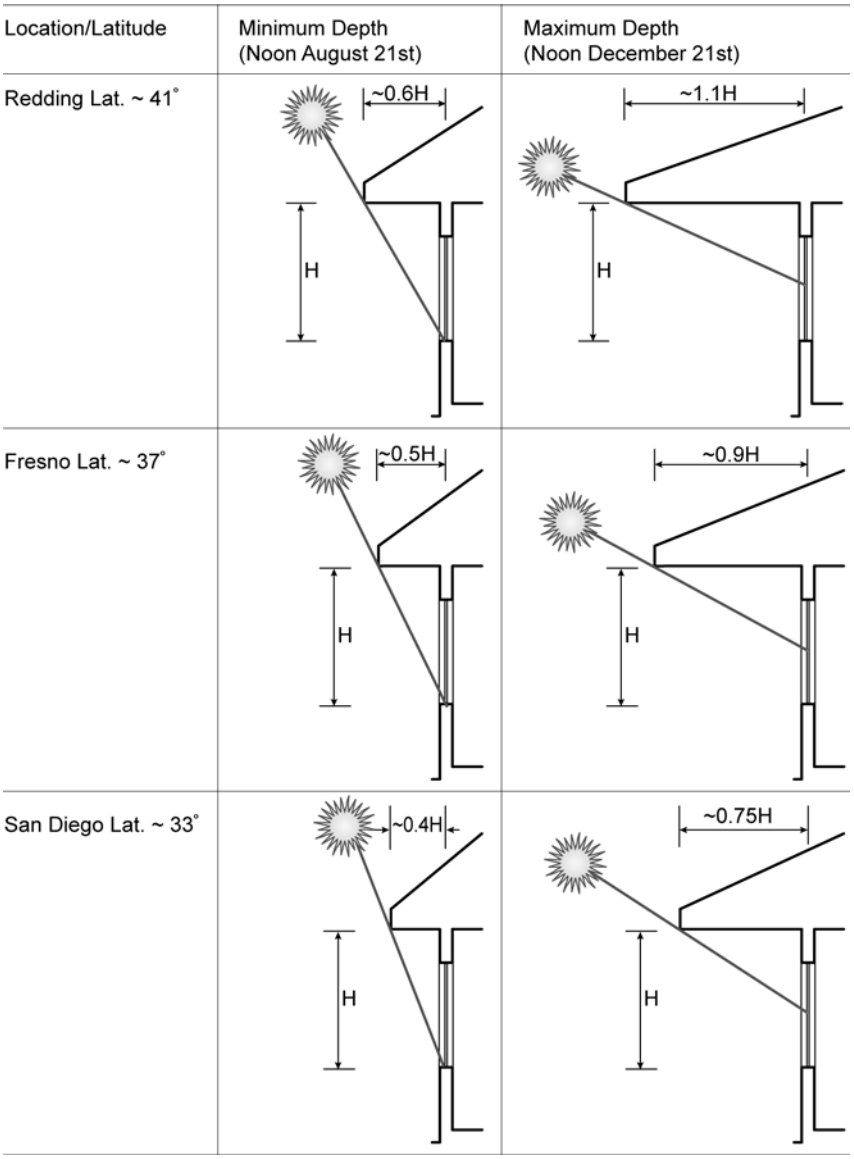

Figure 3-7 – South-Facing Overhang Dimensions for Prescriptive Compliance

Exterior Shading Devices

The prescriptive Standards require fenestration products with an SHGC of 0.40 or lower in climate zones 2, 4, and 7 through 15. However, a fenestration product with an SHGC greater than 0.40 may be used with the prescriptive requirements if a qualifying exterior shading device is used. Qualifying exterior devices and their SHGC values are shown in Table 3-5. These include woven sunscreens as well as perforated metal sunscreens. As shown in the table, these devices transmit between 13% and 30% of the sun that strikes them.

When exterior shading devices are used, the SHGC requirements of prescriptive Package D or Package D Alternative may be met for all climate zones without calculations. Any exterior shading device other than bug screens listed in Table 3-5 will achieve compliance when used in combination with any allowed fenestration product.

For compliance credit, exterior shades must be permanently attached to the outside of the residence with fasteners that require additional tools to remove (as opposed to clips, hooks, latches, snaps, or ties). Operable shading devices such as shutters may be used as long as they are permanently attached to the building. Exterior shades on windows or skylights that are prohibited by life-safety codes from being permanently attached for emergency egress reasons are exempt from this requirement.

The SHGC of the window in combination with an exterior device is given by the following equation[1]:

$SHGC_{combined} = (0.2875 \times SHGC_{max} + 0.75) \times SHGC_{min}$

All windows are assumed to have an insect screen and this is the default condition against which other window/exterior shading device combinations are compared. The standard case is a window with an SHGC of 0.40 and an insect screen with an SHGC of 0.76 (see Table 3-5). For this default case, the SHGC of the window is the $SHGC_{min}$, and the SHGC of the exterior sunscreen is $SHGC_{max}$. Working through the math on WS-3R, $SHGC_{combined}$ is 0.3874. This means that any combination of window SHGC and exterior SHGC that results in an $SHGC_{combined}$ of 0.3874 or less complies with the prescriptive requirements.

All of the qualifying shading devices (other than the default) have an SHGC of 0.30 or lower. Combining this with the SHGC of any window will always result in an $SHGC_{combined}$ which is significantly lower than the prescriptive criterion of 0.40. This method of combining the SHGC of the window with the SHGC of the exterior shading device is also used with the whole building performance approach.

Compliance WS-3R is used to calculate the combined SHGC of windows and exterior shading devices. When exterior shades are required for compliance, they must be listed on the CF-1R form and be documented on the plans.

Table 3-5 – Qualifying Exterior Shades and Solar Heat Gain Coefficients

Exterior Shading Device	SHGC
Bug (insect) Screen (default for windows)	0.76
Woven Sunscreen	0.30
Louvered Sunscreen	0.27
Low Sun Angle Sunscreen	0.13
Roll-down Awning	0.13
Roll -down Blinds or Slats	0.13

Interior Shading

There is no credit for interior shading devices, although they can be effective in reducing solar gains and should be considered by homeowners. The Energy Commission considers interior shades in the category of home furnishings and not a feature of the house that is provided by the builder. Draperies, blinds, shades, and other interior devices are therefore not offered credit toward

[1] This is Equation R4-14 from the 2005 Residential ACM Manual and it is included in WS-3R in Appendix A.

compliance. While there is no compliance credit, a default standard shade is still considered in performance calculations so that estimates of energy use are more realistic, and tradeoffs against other measures are more equitable. A default interior shade is not modeled, however, with skylights.

Bay Windows

Bay windows are a special compliance case. Bay windows may either have a unit NFRC rating (i.e., the rating covers both the window and all opaque areas of the bay window), an NFRC rating for the window only, or no NRFC rating. Non-rated bay windows may or may not have factory-installed insulation.

For bay windows that come with an NFRC rating for the entire unit, compliance is determined based on the rough opening area of the entire unit, applying the NFRC U-factor and SHGC. If the unit U-factor and SHGC do not meet the package requirements, the project must show compliance using the performance approach.

Bay windows with no rating for the entire unit (where there are multiple windows that make up the bay) and with factory-installed or field-installed insulation must comply accounting for the performance characteristics of each component separately. Opaque portions must meet the mandatory measures' minimum insulation requirements (i.e., R-19 ceiling, R-13 walls, and R-13 floor). For prescriptive compliance, the opaque portion must either meet the minimum insulation requirements of the packages for the applicable climate zone or be included in a weighted average U-factor calculation of an overall opaque assembly that does meet the package requirements. For the windows, the U-factor and SHGC values may be determined either from an NFRC rating or by using default values. If the window U-factor and SHGC meet the package requirements, the bay window complies prescriptively (if overall building fenestration area meets prescriptive compliance requirements). Bay window fenestration area is based on each individual window in the bay window. If the bay window does not meet package requirements, the project must show compliance under the performance approach. Bay window fenestration area and orientation in the performance approach are based on each individual window in the bay window.

Natural Ventilation through Windows

Operable windows can be a source of "free" cooling. During periods when the outdoor temperature is lower than the desired indoor temperature and the indoor temperature is uncomfortably warm from solar gains through windows or from heat generated inside the house, windows may be opened for some or all of the cooling. Natural ventilation can reduce the need to run the air conditioner. Not only does natural ventilation save energy, but it can also provide better air quality inside the home.

In performance calculations, natural ventilation through windows is modeled. The default assumption is that the free ventilation area is 10% of the total window area and the height difference between the inlet and the outlet is 2 feet for single-story buildings and 8 feet for two- and three-story buildings. Credit is offered for design solutions that result in better natural ventilation. Credit is offered through the performance method for buildings with a larger percent of

casement windows (larger free area than sliders) and for windows that are positioned so that the height difference between inlets and outlets is greater.

Noise is a major deterrent to opening windows for ventilation or cooling. When a house is designed, neighboring noise sources should be identified, and the design of the house should be modified to mitigate the effects. Exterior mass walls are often used to mitigate freeway or roadway noise. The location and design of windows should also be considered. Dusty conditions are also deterrents to the use of operable windows for ventilation.

Most HVAC systems used in residences do not provide outside air for ventilation, so operable windows are the only source of ventilation air to dilute indoor contaminants and allow moisture to escape. When building envelopes are sealed to reduce infiltration, there may be a need to have a mechanical means of bringing in outside air. This is discussed in greater detail in Section 3.5.

3.2.5 Compliance and Enforcement

The compliance and enforcement process for fenestration products is basically one of making sure that the data from one set of documents matches data in another, and that with the specified fenestration performance, the building complies with the Standards.

Compliance Documentation.

The person responsible for the compliance documentation must verify that data used in the calculations and entered on the compliance forms is reasonable. If data does not match the construction documents (plans) or if the plans are still under development, the compliance documentation author should make sure that the person preparing the plans understands what U-factor and SHGC are required for the fenestration products.

When performing compliance calculations and preparing documentation, the compliance author should consult manufacturers' published data (web site or catalog) or a directory of fenestration products that contains the certified U-factor ratings. The directory is available from http://www.nfrc.org.

If the exact make and model number of the fenestration products to be installed are not known, there are a few options:

- Look up the U-factors for a number of products most likely to be installed and use the highest value of those products in the compliance calculations. Whichever fenestration product is then installed will comply with the U-factor used in the calculation. Follow a similar procedure for SHGC.

- Specify a particular product and state "or equivalent." In this approach, the builder or installer must understand that the U-factor and SHGC of the installed product must match, or be less than, the U-factor and SHGC specified in the compliance documentation.
- Use the appropriate default U-factor from Standards Table 116-A and default SHGC from Standards Table 116-B; however, this approach has disadvantages:

(a) There is no guarantee that a selected product will have the same or better performance than the U-factor assigned to that generic type; and,

(b) The compliance benefits of installing a high efficiency window will be lost.

Plan Checking

The plans examiner verifies that the fenestration product U-factors and SHGCs used on the compliance documents match those on the plans. The plans examiner can also verify that special shading devices such as exterior sunscreens are documented in the special features section of the CF-1R so this information will be available for the field inspector.

Construction

The fenestration product installer needs to understand the required U-factors and product SHGC values for the specific project, based on the compliance documentation such as the Certificate of Compliance (CF-1R). The installer should check the documentation to ensure that the products have the temporary label with information documenting that the window meets the compliance requirements.

NFRC labels have U-factorand SHGC data for residential (and nonresidential) windows. Verify that the residential data complies. The temporary label must remain on the product until the field inspector has inspected it.

The fenestration contractor must complete the Installation Certificate (CF-6R).

Field Inspection

The field inspector should verify that the windows and other fenestration products installed have performance characteristics that are documented on the temporary NFRC labels and that comply with the U-factor and SHGC used in the compliance documentation, including the CF-6R. All fenestration products must have a temporary label indicating U-factor, SHGC, and air infiltration rate (only field-fabricated products are exempt from labeling requirements).

The field inspector must compare the actual installed glass area with the glass area indicated on the CF-6R and with the maximum allowed glass areas indicated on the CF-1R. If more glass is installed, then the appropriate action depends on the compliance approach. If the prescriptive method was used, the glass area must not exceed the prescriptive limit (20% of floor area and in some climates a separate 5% west-facing limit). If the performance approach was

used, then the compliance calculations must be redone to demonstrate compliance with the higher glass area.

3.3 Insulation

This section of the building envelope chapter addresses the requirements for insulating the opaque portion of the building shell. Components of the building shell include the walls, the floor, and the roof or ceiling. Windows and doors are addressed in Section 3.2, Fenestration.

3.3.1 Insulation General Mandatory Measures

§118

A number of mandatory measures apply to insulation in general, and those are covered in this section:

- Insulating materials must be certified and labeled by the manufacturer.
- Urea formaldehyde foam insulation may be installed only in exterior walls with an interior vapor barrier.
- Insulating materials installed in exposed applications must have a flame spread of 25 or less and a smoke development rating of 450 or less.

Other mandatory measures apply to specific applications, and they are covered in the sections on ceiling/roof insulation, wall insulation, floor insulation, and slab insulation.

Certification of Insulating Materials

§118(a)

The California Standards for Insulating Materials, which became effective on January 1, 1982, ensure that insulation sold or installed in the state performs according to the stated R-value and meets minimum quality, health and safety standards.

Manufacturers must certify that all insulating materials comply with California Standards for Insulating Materials. Builders may not install the types of insulating materials indicated in §118(a) unless the manufacturer has certified the product. Builders and enforcement agencies should use the Department of Consumer Affair's *Consumer Guide and Directory of Certified Insulation Material* to check compliance. Building departments receive a copy of the current directory. If an insulating product is not listed in the most recent edition of the directory, or to purchase a directory, contact the Department of Consumer Affairs Thermal Insulation Program at (916) 574-2041.

Urea Formaldehyde Foam Insulation

§118(b)

Urea formaldehyde is restricted by §1553 of CBC Title 20. If such products are certified, this is verification that the restrictions of §1553 were met. The restrictions in Standards §118 also apply, which allow the use of urea formaldehyde foam insulation only if

- it is installed in exterior side walls, and
- a four-mil-thick plastic polyethylene vapor barrier or equivalent plastic sheeting vapor barrier is installed between the urea formaldehyde foam insulation and the interior space in all applications.

Flamespread Ratings

§118(c)

California Standards for Insulating Materials require that all exposed installations of faced mineral fiber and mineral aggregate insulations must use fire retardant facings. Exposed installations are those where the insulation facings do not touch a ceiling, wall or floor surface, and faced batts on the underside of roofs with an air space between the ceiling and facing. These installations require insulation that has been tested and certified not to exceed a flame spread of 25 and a smoke development rating of 450.

Flame spread ratings and smoke development ratings are shown on the insulation or packaging material or may be obtained from the manufacturer.

3.3.2 Ceiling/Roof Insulation

Mandatory Measures

§118(d)

§118(e)

§150(a)

§150(b)

These sections are also shown in Appendix B of this document.

The following mandatory measures apply specifically to roof and ceiling insulation:

- When insulation is installed in the attics of existing buildings, at least R-38 must be installed in climate zones 1 and 16 and at least R-30 in the other climate zones. Insulation in roof/ceiling constructions must be placed in direct contact with the infiltration barrier. In most cases the attic is ventilated and the infiltration barrier is the drywall ceiling; in this case, the insulation must lie directly on top of the ceiling.
- Wood framed ceiling/roof construction assemblies must have at least R-19 insulation or a maximum U-factor of 0.051, as determined from the Joint Appendices, Appendix IV. The equivalent U-factor is from Table IV.2, entry A5, which is R-19 insulation in a wood framed rafter roof.

- Some areas of the ceiling/roof can fail to meet the mandatory minimum U-factor as long as other areas exceed the requirement and the weighted average U-factor for the overall ceiling/roof is 0.051 or less.
- In new construction, the R-19 mandatory minimum level of insulation applies for the performance compliance method. Otherwise, the R-19 minimum is superseded by the prescriptive requirements, which call for either R-30 or R-38, depending on climate zone.
- Metal-framed and ceiling/roof constructions other than wood framed must have a U-factor of 0.051 or less in order to comply with the mandatory measures. If the insulation is not penetrated by framing, such as rigid insulation laid over a structural deck, then the rigid insulation can actually have a rated R-value of less than R-19, and the mandatory measures can be satisfied.

Example 3-10

Question

A computer method analysis shows that a new house requires R-30 ceiling insulation to comply using the performance approach, but the minimum mandatory insulation level for ceiling insulation is only R-19. Which insulation level should be used?

Answer

R-30. The higher insulation level must be installed for the building to comply. In some cases such as this, minimum mandatory measures are superseded by stricter measures when using the performance approach.

Example 3-11

Question

A small addition to an existing house appears to comply using only R-15 ceiling insulation with the performance approach. Does this insulation level comply with the Standards?

Answer

No. R-15 would not be sufficient because the required minimum ceiling insulation level established by the mandatory measures is R-19. However, R-15 could be used in limited areas, as follows:

1. 16-inches on center framing with attic with the weighted average U-factor for the entire ceiling/roof is less than 0.049.

2. 24-inches on center framing with attic with the weighted average U-factor for the entire ceiling/roof is less than 0.048.

3. 16-inches on center rafter without attic with the weighted average U-factor for the entire ceiling/roof is less than 0.051.

4. 24-inches on center rafter without attic with the weighted average U-factor for the entire ceiling/roof is less than 0.049.

Prescriptive Insulation Requirements

§151(f)1A

There are two prescriptive compliance approaches, Alternative Component Package C and Alternative Component Package D. The following paragraphs discuss Alternative Component Package D, as it is the basis for the performance calculation methods. The prescriptive Package D compliance method requires R-38 insulation in climate zones 1 and 11 through 16. R-30 insulation is required in the other climate zones. In addition, a radiant barrier is required in climate zones 2, 4 and 8 through 15, the climate zones where air conditioning is more common (see Figure 3-8).

There are two ways to meet the prescriptive insulation requirement. The first is to install R-30 or R-38 insulation in wood-framed construction. Wood-framed constructions include those in Tables IV.1 and IV.2 in Joint Appendix IV.

The other is to use a different roof assembly from Joint Appendix IV, including structural insulated panel systems (SIPS) and metal-framed roofs, as long as they have a U-factor less than that for a wood-framed attic (the choices from Table IV.1 in Joint Appendix IV). The U-factor criteria are 0.026 (Table IV. 1, entry A8) in climate zones 1 and 11 through 16 (where R-38 is required) and 0.032 (Table IV.1, entry A7) in the other climate zones (where R-30 is required).

Note that R-30 or R-38 installed in a wood rafter construction (the choices from Table IV.2) are acceptable for complying with Alternative Component Package D, since they have the minimum required insulation, even though these have a U-factor higher than the U-factor criteria stated above.

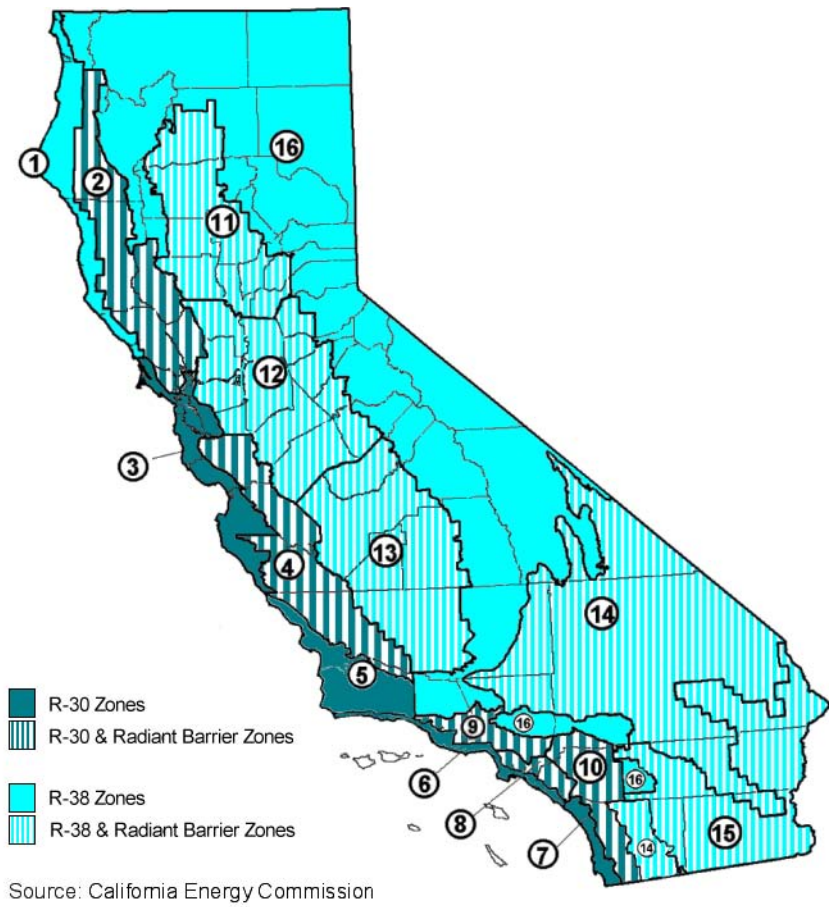

Figure 3-8 – Package D Prescriptive Ceiling/Roof Insulation Requirements

Construction Practice

Insulation Coverage

Ceiling insulation should extend far enough to the outside walls to cover the bottom chord of the truss. However, insulation should not block eave vents in attics because if the flow of air is blocked, moisture may build up in the attic and water vapor may condense on the underside of the roof. This can cause structural damage and reduce the insulation's effectiveness.

Insulation may be tapered near the eave, but it must be applied at a rate to cover the entire ceiling at the specified level. An elevated truss is not required but may be desirable. See Figure 3-9.

Loose Fill Insulation

§150(b) Loose Fill Insulation

Loose fill insulation must be blown in evenly, and insulation levels must be documented on the Installation Certificate (CF-6R). The insulation level can be verified by checking that the depth of insulation conforms to the manufacturer's coverage chart for achieving the required R-value. The insulation must also

meet the manufacturer's specified minimum weight per ft^2 for the corresponding R-value. When installing loose fill insulation, the following guidelines should be followed:

1. For wood trusses that provide a flat ceiling and a sloped roof, the slope of the roof should be at about 4:12 or greater in order to provide adequate access for installing the insulation. Insulation thickness near the edge of the attic will be reduced with all standard trusses, but this is acceptable as long as the average thickness is adequate to meet the minimum insulation requirement.

2. If the ceiling is sloped (for instance, with scissor trusses), loose fill insulation can be used as long as the slope of the ceiling is no more than 4:12. If the ceiling slope is greater than 4:12, loose fill should be used only if the insulation manufacturer will certify the installation for the slope of the ceiling.

3. At the apex of the truss, a clearance of at least 30 in. should be provided to facilitate installation and inspection.

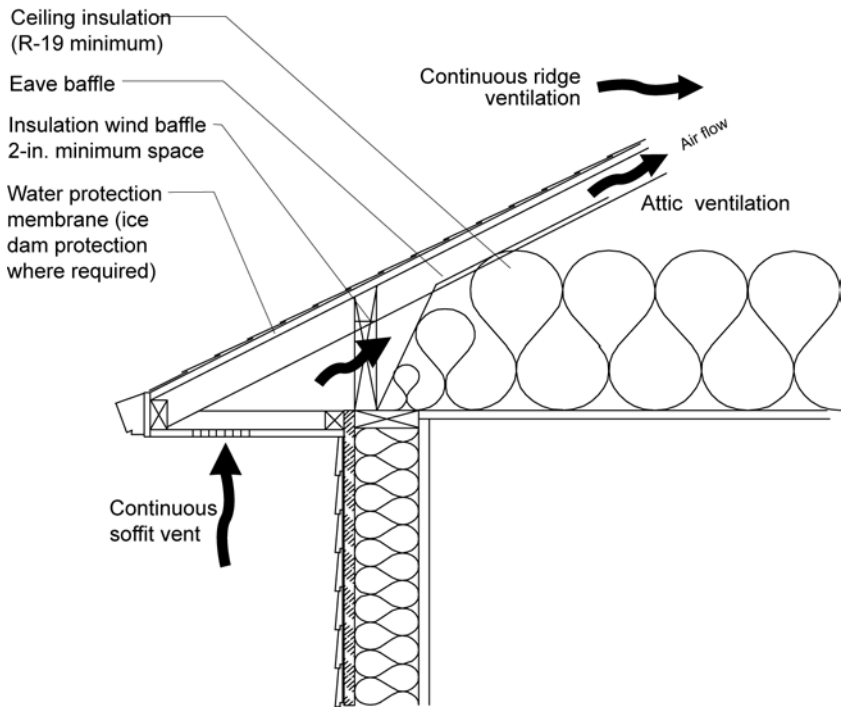

Figure 3-9 – Ceiling Insulation Construction Detail

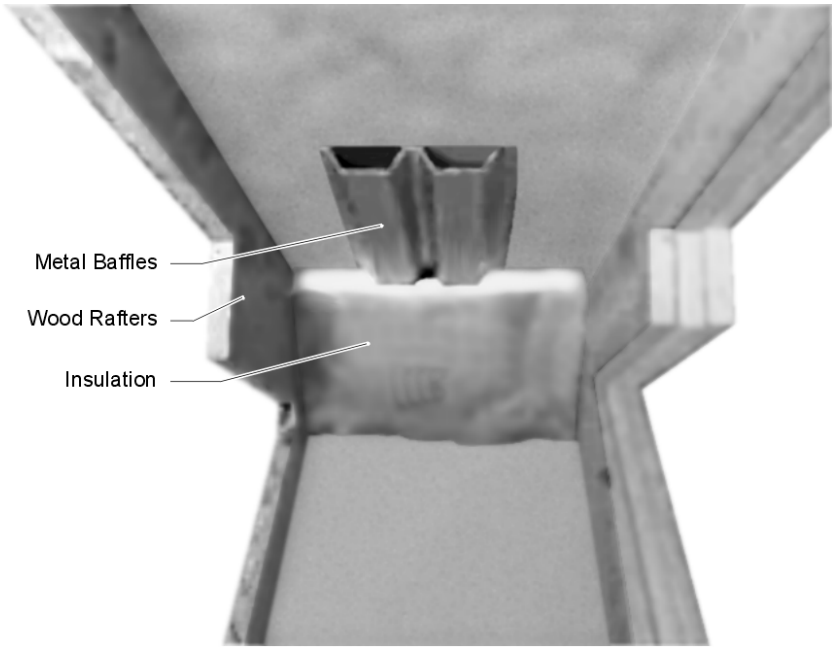

Source: California Energy Commission

Figure 3-10 – Baffles at the Eave in Attics

Ventilation

Where ceiling insulation is installed next to eave or soffit vents, a rigid baffle should be installed at the top plate to direct ventilation air up and over the ceiling insulation. See Figure 3-10. The baffle should extend beyond the height of the ceiling insulation and should have sufficient clearance between the baffle and roof deck at the top. There are a number of acceptable methods for maintaining ventilation air, including pre-formed baffles made of either paper or plastic. In some cases, plywood baffles are used.

The CBC requires a minimum vent area of one ft^2 for each 150 ft^2 of attic floor area. This ratio may be reduced to 1 to 300 if a ceiling vapor retarder is present or if high (for example, ridge or gable vents) and low (soffit vents) attic ventilation is used.

When part of the vent area is blocked by meshes or louvers, the net free area of the vent must be considered when meeting ventilation requirements.

Wood Rafter Constructions

Ventilating solid rafter spaces is more difficult than ventilating attics because each framing cavity requires its own vent openings. However, the requirement for ventilation is at the discretion of the local building official. It is common practice with cellulose insulation, for instance, to completely fill the cavity so that there is no ventilation at all. With batt insulation, it is possible to ventilate above the insulation using eave baffles, ridge vents, and careful installation.

Light Fixtures and Recessed Equipment

§150(k)5

Luminaires recessed in insulated ceilings can create thermal bridging through the insulation. Not only does this degrade the performance of the ceiling assembly, but it can also permit condensation on a cold surface of the luminaire if exposed to moist air, as in a bathroom.

For these reasons, luminaires recessed in insulated ceilings must meet three requirements:

- They must be approved for zero clearance insulation cover (IC) by Underwriters Laboratories or other testing/rating laboratories recognized by the International Conference of Building Officials. This enables insulation to be packed in direct contact with the luminaire. (See Figure 3-11.)
- The luminaire must have a label certifying air tight (AT) construction. Air tight construction means that leakage through the luminaire will not exceed 2.0 cfm when exposed to a 75 Pa pressure difference, when tested in accordance with ASTM E283.
- The luminaire must be sealed with a gasket or caulk between the housing and ceiling. For more information see Section 6.10 of this manual.

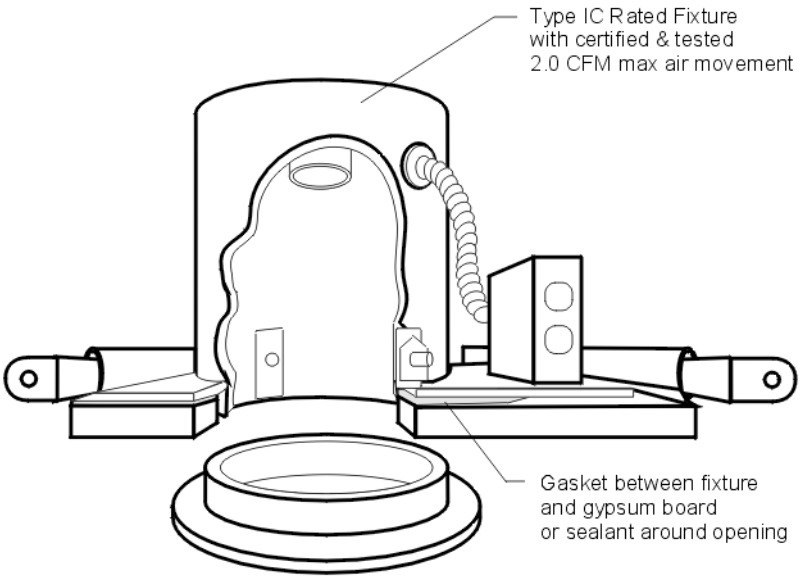

Figure 3-11 – IC-Rated Light Fixture

3.3.3 Radiant Barriers

Radiant Barrier Requirements

§151(f)2

The prescriptive requirements call for a radiant barrier in climate zones with significant cooling loads (2, 4, and 8 through 15). The radiant barrier is a reflective material that reduces radiant heat transfer caused by solar heat gain in the roof. Radiant barriers reduce the radiant gain to air distribution ducts and insulation located below the radiant barrier. In the performance approach, radiant barriers are modeled as separate adjustments to the heating U-factor and the cooling U-factor. The duct efficiency is also affected by the presence of a radiant barrier, with the performance approach.

Radiant Barrier Construction Practice

To qualify, a radiant barrier must have an emittance of 0.05 or less. The product must be tested according to ASTM C-1371-98 or ASTM E408-71(2002) and must be certified by the Department of Consumer Affairs[2]. Radiant barriers must also meet installation criteria as specified in Section 4.2.1 of the *Residential ACM Manual* (Section 4.2.1 is also reproduced in Appendix D of this document).

The most common way of meeting the radiant barrier requirement is to use roof sheathing that has a radiant barrier bonded to it in the factory. Oriented strand board (OSB) is the most common material available with a factory-applied radiant barrier. The sheathing is installed with the radiant barrier (shiny side) facing down toward the attic space. Alternatively, a radiant barrier material that meets the same ASTM test and moisture perforation requirements that apply to factory-laminated foil can be field-laminated. Field lamination must use a secure mechanical means of holding the foil to the bottom of the roof decking such as staples or nails that do not penetrate all the way through the roof deck material.

Other acceptable methods are to drape a foil type radiant barrier over the top of the top chords before the sheathing is installed, stapling the radiant barrier between the top chords after the sheathing is installed, and stapling the radiant barrier to the underside of the truss/rafters (top chord). For these installation methods, the foil must be installed with spacing requirements as described in Section 4.2.1 of the *Residential ACM Manual*. . The minimum spacing requirements do not apply to this installation since it is considered a “laminated” system.

Installation of radiant barriers is somewhat more challenging in the case of closed rafter spaces when sheathing is installed that does not include a laminated foil. Foil may be field-laminated after the sheathing has been installed by “laminating” the foil as described above to the roof sheathing between framing members. This construction type is described in the Residential ACM Manual, Section 4.2.1.

See Figure 3-12 for drawings of radiant barrier installation methods.

---

[2] Certification of radiant barriers is required by CCR, Title 24, Part 12, Chapter 12-13, Standards for Insulating Material.

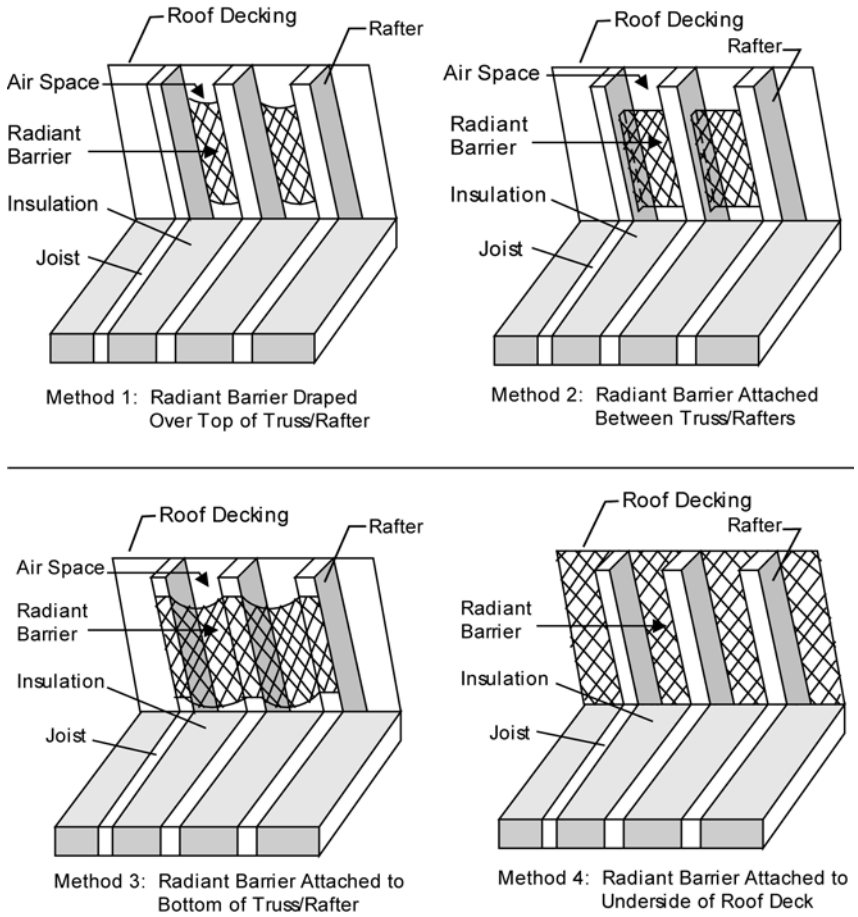

Figure 3-12 – Methods of Installation for Radiant Barriers

3.3.4 Wall Insulation

Mandatory Measures

§150(c)

The mandatory measures require that wood-framed walls above grade have at least R-13 insulation installed in the cavities between the framing members. However, the prescriptive measures for Alternative Component Package C requires more insulation than the minimum requirements in all climate zones. Likewise, Alternative Component Package D requires more insulation than the minimum requirements in climate zones 1 and 11 through 16.

Wall constructions with insulation that is not penetrated by framing members, or with metal framing, comply with this mandatory measure if they have a U-factor lower than 0.102, which is the U-factor of a wood-framed wall with R-13 insulation. Entry A3 in Table IV.9 in Joint Appendix IV is the basis for the U-factor criterion.

Insulation may be of greater insulating value in certain areas of the wall and of lesser insulating value in other areas of the wall provided that the area-weighted U-factor does not exceed 0.102 to show equivalence to an R-13 wall.

There are several cases where the mandatory measures for wall insulation do not apply or apply in a special way. These include the following:

- The mandatory measures apply to framed foundation walls of heated basements or heated crawl spaces that are located above grade, but not to the portion that is located below grade.
- Existing wood-framed walls of an addition that are already insulated with R-11 insulation need not comply with the mandatory R-13 wall insulation, but this exception applies only with the performance method. See Exception 1 to §152(a).
- Rim joists between the stories of a multi-story building are deemed to comply with these mandatory measures if they have R-13 insulation installed on the inside of the rim joist and carefully fitted between the joists.

Prescriptive Requirements – Framed Walls

§151(f)1.A.

The Package D prescriptive requirements (Standards Table 151-C, also in Figure 3-13 below and Appendix B of this document) call for R-19 wall insulation in climate zones 11 through 13 and R-21 wall insulation in climate zones 1 and 14 through 16. R-13 insulation is required in other climate zones. The Package C requirements call for significantly more insulation (see Standards Table 151-B, also in Appendix B of this document).

Wood-framed walls may comply by specifying and installing the minimum R-value indicated. For metal-framed walls, or as an alternative to meeting the installed R-value in wood-framed walls, the designer may choose any wall construction from Joint Appendix IV that has a U-factor equal to or less than the U-factor of a wood-framed wall with the required insulation.

For climates where R-13 is required, the maximum U-factor is 0.102 (Joint Appendix Table IV.9, entry A3). For climates where R-19 is required, the maximum U-factor is 0.074 (IV.9, A5). In climates where R-21 is required, the maximum U-factor is 0.069 (IV.9, A6).

Metal-framed assemblies will require rigid insulation in order to meet the maximum U-factor criteria. U-factors for metal-framed walls are given in Joint Appendix Table IV.11.

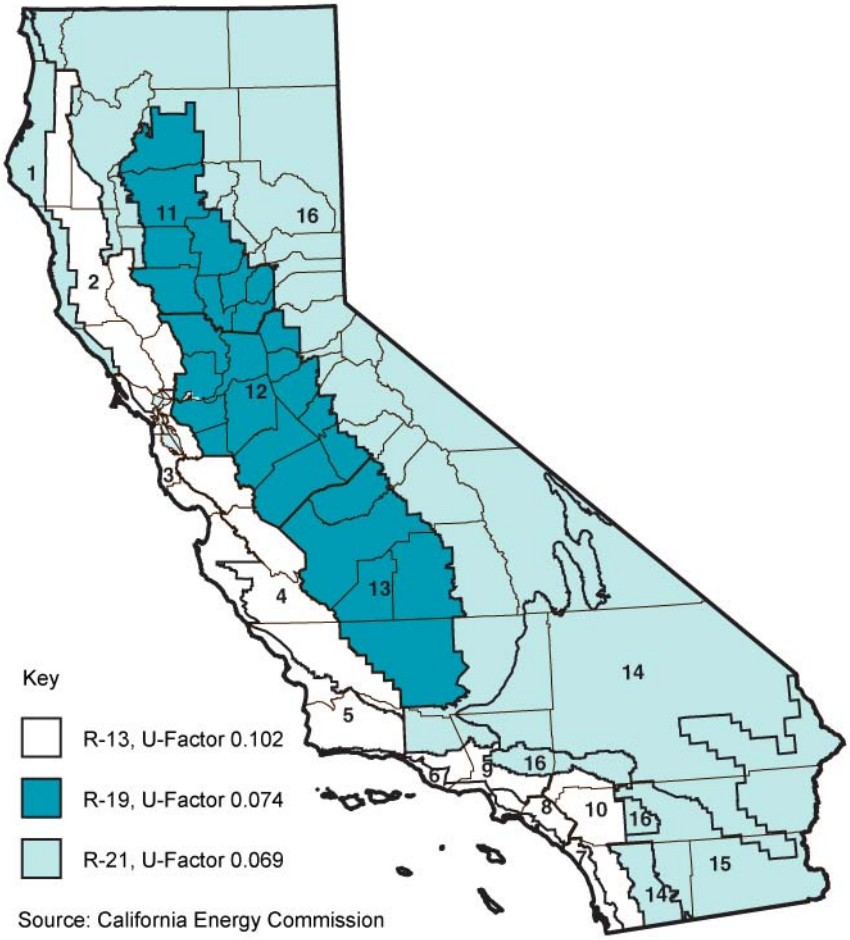

Figure 3-13 – Package D Wall Requirements by Climate Zone

Prescriptive Requirements – Mass Walls

§151(f)1.A.

§151(f)

These sections are also shown in Appendix B of this document.

The prescriptive requirements have separate criteria for heavy mass walls. While the Standards recognize both heavy mass and light mass walls, separate criteria are presented only for heavy mass walls and only for Package D. Heavy mass walls are those that weigh more than 40 lb/ft². Where the package indicates “NA” for a light mass wall the assembly must comply with 0.102 U-factor for climate zones that require R-13 for wood-framed walls, or 0.074 for where R-19 is required, or 0.069 where R-21 is required the. The “NA” applies to both heavy and light mass walls for Package C and light mass walls for Package D.

The R-value listed in Standards Table 151-C (also in Appendix B of this document) for heavy mass walls is the minimum R-value for the entire wall assembly, including insulation and both interior and exterior air films. Heavy mass walls require R-2.44 in climates 2 through 10 and R-4.76 in the other

climates. Tables IV.12 and IV.13 from Joint Appendix IV have the thermal properties of hollow unit masonry, solid core masonry, and concrete walls. Choices from these tables that have a heat capacity (HC) greater than or equal to 8.0 have a density greater than 40 lb/ft³ and qualify as heavy mass walls.[3]

To determine the total R-value of a heavy mass wall, the U-factor from Table IV.12 or IV.13 is added to an insulation layer selected from Table IV.19. When the prescriptive requirements are used, the insulation must be installed integral with or on the exterior of the heavy mass wall.

Construction Practice

- Because it is difficult to inspect wall insulation behind tub/shower enclosures after the enclosures are installed, insulation of these wall sections should be inspected during the framing inspection.
- Batt insulation should fill the wall cavity evenly. If kraft or foil-faced insulation is used, it should be installed per manufacturer recommendations to minimize air leakage and avoid sagging of the insulation.
- Wall insulation should extend into the perimeter floor joist (rim joist) cavities along the same plane as the wall.
- If a vapor barrier is required, it must be installed on the conditioned space side of the framing.

[3] This assumes a specific heat of 0.2.

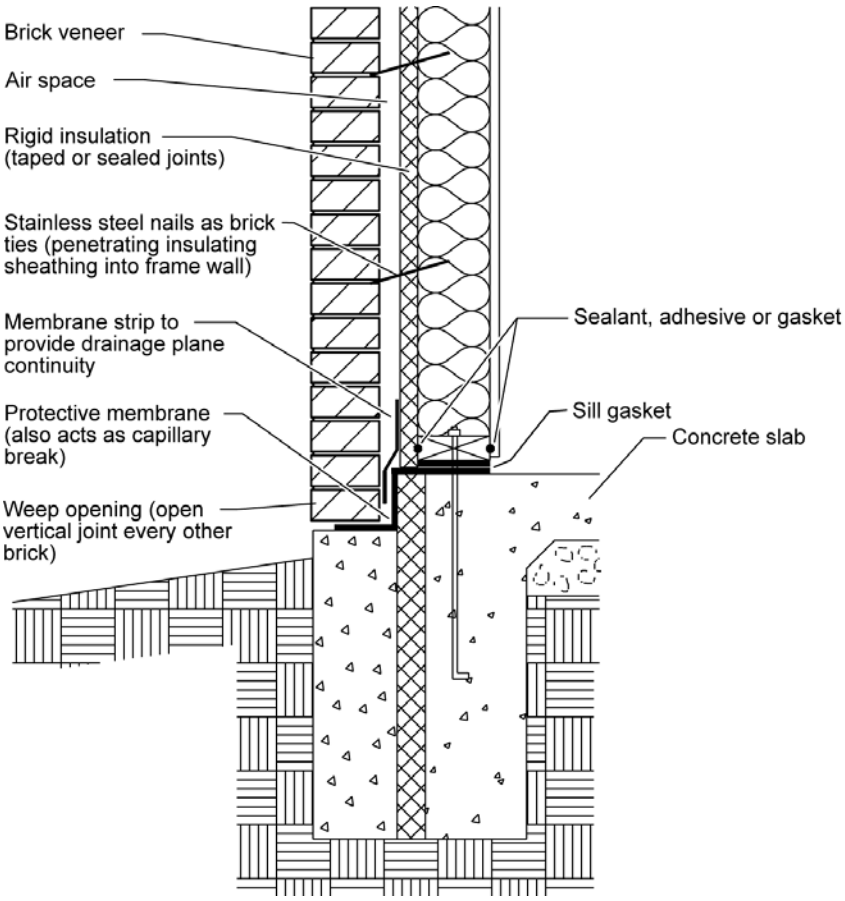

Figure 3-14 – Brick Wall Construction Details
Wood-Framed Wall with Brick Veneer, Mandatory Minimum R-13 Insulation

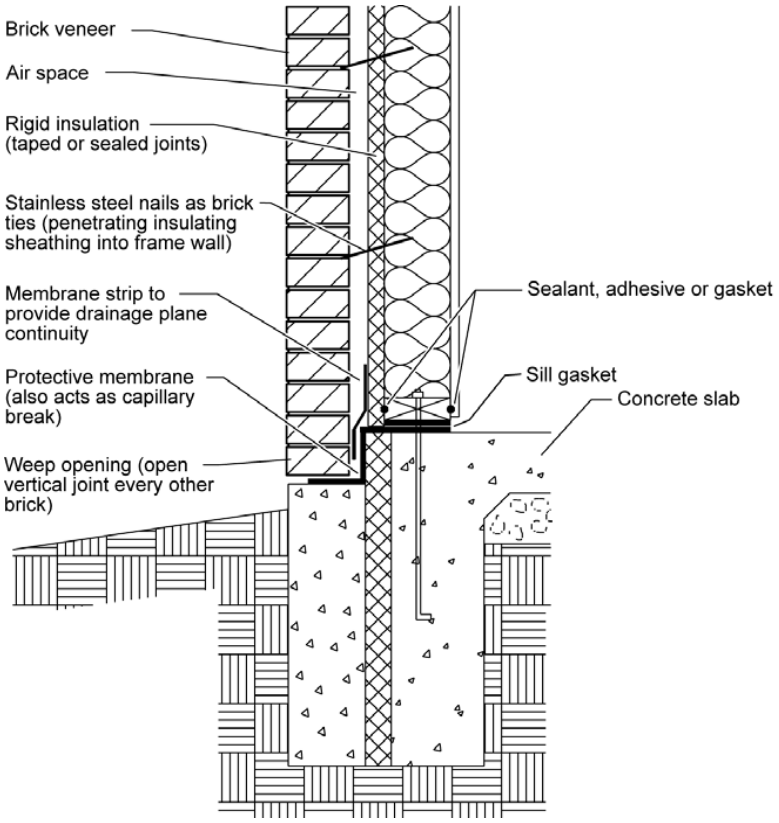

Figure 3-15 – Wall Construction Detail
Wood-Framed Wall with Vinyl or Aluminum Siding, Mandatory Minimum R-13 Insulation

Example 3-12

Question

Do new residential buildings or additions consisting of block walls (for example, converting a garage into living space) have to comply with the R-13 minimum wall insulation requirement? If not, what insulation R-value do they need?

Answer

No, the mandatory wall insulation requirement for R-13 applies to frame walls only. The amount of insulation needed, if any, will vary depending on the compliance approach selected. Performance compliance may not require any additional insulation if compliance can be achieved without insulation in that space. Prescriptive compliance may require some level of insulation, depending on the climate zone, package selected, and whether the walls are light (block) or heavy mass. Use Joint Appendix IV to determine the R-value of the mass wall alone. If additional insulation is required, it must be integral with the wall or installed on the outside of the mass wall.

3.3.5 Floor Insulation

Mandatory Measures

§150(d)

Raised floors must meet minimum insulation requirements (see Figure 3-16). Wood-framed floors must have at least R-13 insulation installed between framing members, or the construction must have a U-factor of 0.064 or less. The equivalent U-factor is based on R-13 insulation in a wood-framed floor and no crawlspace or buffer zone beneath the floor. The corresponding floor construction from Joint Appendix IV is Table IV.21, entry A3. If comparing to a crawlspace assembly, the equivalent U-factor is 0.046, which includes the effect of the crawlspace. The corresponding floor construction from Joint Appendix IV is Table IV.20, entry A3.

Other types of raised floors, except for concrete raised floors, must also meet these maximum U-factors. In all cases, some areas of the floor can have a U-factor that fails the requirements as long as other areas have a U-factor that exceeds the requirements and the area-weighted average U-factor is less than described above.

Raised slab floors with radiant heat must meet special insulation requirements that are described in Chapter 4 of this manual.

Table IV.20 from Joint Appendix IV has U-factors for floors located over a crawlspace, and Table IV.21 has U-factors for floors located over ambient conditions. The difference is that R-6 insulation is added to approximate the buffering effect of the crawlspace. The additional R-6 is also included when modeling floors over crawlspaces with the performance method.

There is an exception to the mandatory measures for controlled ventilation crawlspaces. If all eligibility and installation criteria for a controlled ventilated crawlspace are met, raised floors above the controlled ventilation crawlspace need not meet the minimum insulation requirement. See the discussion below in the Compliance Options section.

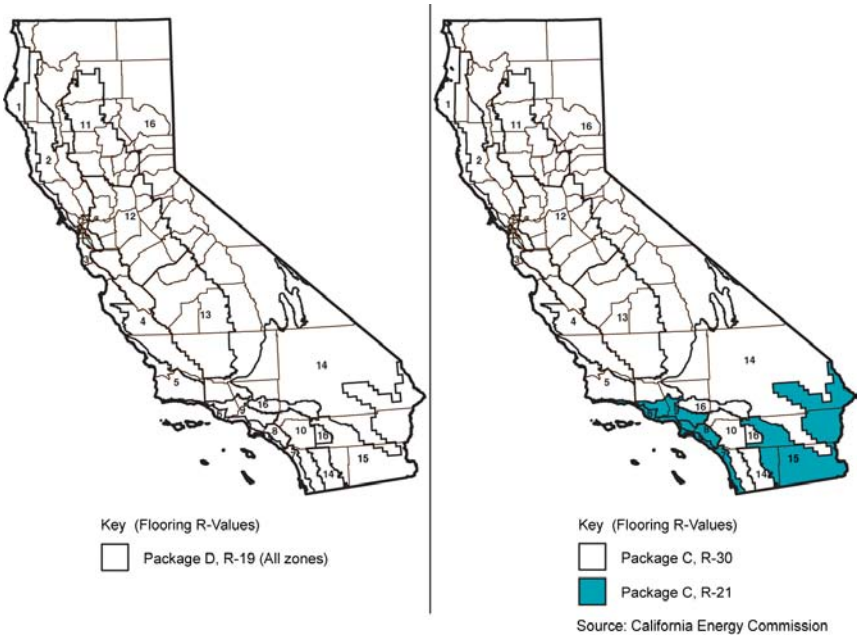

Figure 3-16 – Raised Floor Insulation Requirements by Climate Zone

Prescriptive Requirements

§151(f)1.A.

The Package D prescriptive requirements call for R-19 insulation in all climates. Package C requires R-21 in climate zones 6 through 9 and 15, and R-30 in the other climate zones.

The requirement may be satisfied by installing the specified amount of insulation in a wood-framed floor or by meeting an equivalent U-factor. Those U-factors are listed in Table 3-6 along with the corresponding constructions from Joint Appendix IV. Package D has separate requirements for concrete raised floors. This type of construction is typical for the floor that separates the first habitable floor of multifamily buildings from a parking garage. For this class of construction, R-4 insulation is required for climate zones 12 and 15, and R-8 is required for climate zones 1, 2, 11, 13, 14, and 16. No insulation is required in other climate zones. Package C indicates “NA” for concrete raised floor insulation, which means that the same insulation is required as for a wood-framed floor.

Table 3-6 – Raised Floor Constructions Used as Basis for Equivalent U-factor Compliance

Insulation R-value	Crawlspace?	Joint Appendix IV Construction	Equivalent U-factor
R-13	No	IV.21 A3	0.064
R-13	Yes	IV.20 A3	0.046
R-19	No	IV.21 A4	0.048
R-19	Yes	IV.20 A4	0.037
R-22	No	IV.21 A5	0.044
R-22	Yes	IV.20 A5	0.034
R-30	No	IV.21 A7	0.034
R-30	Yes	IV.20 A7	0.028

Construction Practice

Floor insulation should be installed in direct contact with the subfloor so that there is no air space between the insulation and the floor. Support is needed to prevent the insulation from falling, sagging, or deteriorating.

Options for support include netting stapled to the underside of floor joists, insulation hangers running perpendicular to the joists, or other suitable means. Insulation hangers should be spaced at 18 in. or less prior to rolling out the insulation. Insulation hangers are heavy wires up to 48 in. long with pointed ends, which provide positive wood penetration. Netting or mesh should be nailed or stapled to the underside of the joists. Floor insulation should not cover foundation vents.

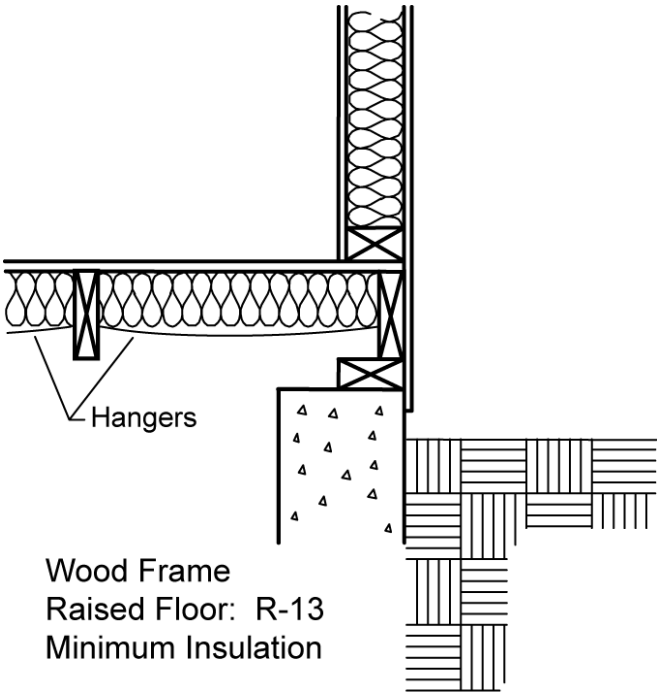

Figure 3-17 – Raised Floor Insulation

3.3.6 Slab Insulation

Mandatory Measures

§150(l)

§118(g)

The mandatory measures do not require slab insulation, but when the prescriptive requirements call for it, the mandatory measures require that the insulation material must be suitable for the application, with a water absorption rate no greater than 0.3% when tested in accordance with ASTM C272 Test Method A, 24-Hour-Immersion, and a vapor permeance no greater than 2.0 perm/in. when tested in accordance with ASTM E96. An example of an insulating material that meets these specifications is smooth-skin extruded polystyrene.

The insulation must also be protected from physical and UV degradation by either installing a water-resistant protection board, extending sheet metal flashing below grade, choosing an insulation product that has a hard durable surface on one side, or by other suitable means.

Slab edge insulation is mandatory with heated slabs, as required by Section 118(g) of the Standard*s.* See Chapter 4 of this manual for details.

Prescriptive Requirements

§151(f)1

Prescriptive Package D requires slab insulation only in climate zone 16. In this case, a minimum of R-7 must be installed. Package C requires R-7 slab insulation in all climates. The insulation must be installed to a minimum depth of 16 in. or to the bottom of the footing, whichever is less. The depth is measured from the top of the insulation, as near the top-of-slab as practical, to the bottom edge of the insulation (see Figure 3-18).

Perimeter insulation is not required along the slab edge between conditioned space and the concrete slab of an attached unconditioned enclosed space such as a garage, covered porch, or covered patio. Neither would it be practical or necessary to insulate concrete steps attached to the outside slab edge.

In situations where the slab is below grade and slab edge insulation is being applied to a basement or retaining wall, the top of the slab edge insulation should be placed as near to ground level as possible and extended down at least 16 in. In situations where the slab is above grade and slab edge insulation is being applied, the top of the slab edge insulation should be placed at the top of the slab.

Example 3-13

Question

What are the slab edge insulation requirements for a hydronic-heating system with the hot water pipes in the slab?

Answer

The requirements for insulation of heated slabs can be found in §118(g) of the Standards and are described in Chapter 4 of this manual. The material and installation specifications are as follows:

- Insulation values as shown in Table 118-B of the Standards
- Protection from physical damage and ultra-violet light deterioration
- Water absorption rate no greater than 0.3% (ASTM-C-272)
- Water vapor permeance no greater than 2.0 per/inch (ASTM-E-96)

Construction Practice

Slab-edge insulation should be protected from physical damage and ultraviolet light exposure because deterioration from moisture, pest infestation, ultraviolet light and other factors can significantly reduce the effectiveness of the insulation.

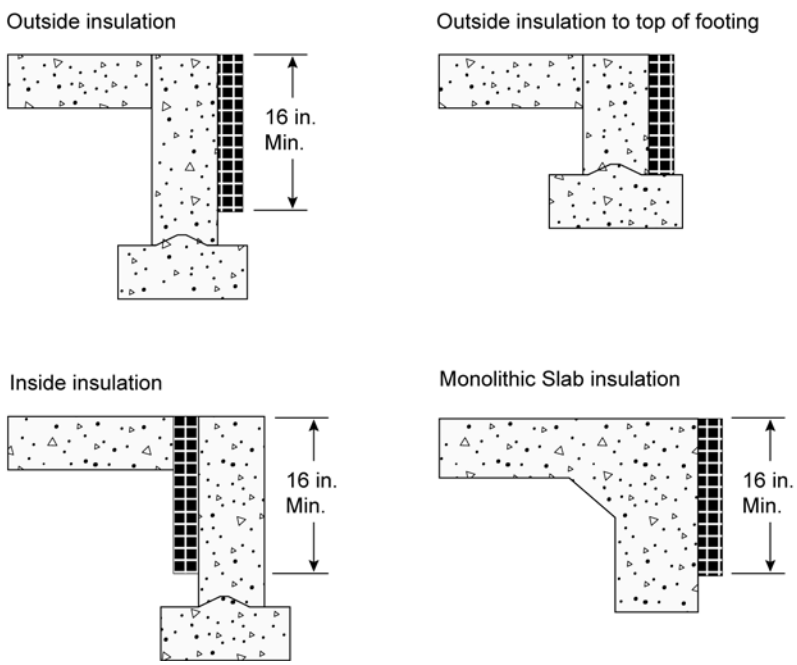

Figure 3-18 – Allowed Slab Edge Insulation Placement

When slab-edge insulation is required by the prescriptive or performance requirements, then minimum depth is 16 in. or to the top of the footing, which ever is less.

3.3.7 Compliance Options

Quality Insulation Installation

Energy Commission videos.

Residential ACM Manual Appendix RH

Typical residential insulation installations have flaws that degrade thermal performance. Three problems are generally responsible for the degradation:

- Insulation is not in contact with the air barrier creating live air spaces that short-cut the insulation.
- The insulation has voids or gaps, resulting in portions of the construction assembly that are not insulated.
- The insulation is compressed, creating a gap near the air barrier and/or reducing the thickness of the insulation.

Since these problems are so widespread, the Energy Commission assumes in its approved computer programs, prescriptive standards, and life-cycle cost analyses that insulation does not perform as effectively as standard U-factor calculations would indicate. Since the standard calculations are based on good quality installation, wall heat loss and heat gain are assumed to be 13.3% higher than a quality installation due to common installation and construction flaws. For ceiling/roof assemblies (including attics), the flaws are assumed to add 0.01 to the heating U-factor and 0.003 to the cooling U-factor relative to assemblies with verified quality insulation installations.[4]

The calculated U-factors that are presented in Joint Appendix IV do not include these adjustments; rather they are automatically added by Energy Commission approved software.

Although Residential ACM Manual Appendix RH is quite thorough and needs to be understood in its entirety, two matters warrant additional elaboration in this manual.

1. It is important to maintain contact between the wall and ceiling insulation and the interior sheetrock that forms the air barrier to prevent convection from reducing the effectiveness of the insulation. This is an issue particularly for knee walls, skylight wells, and underfloor insulation where there is traditionally no drywall or other backing material to help maintain contact between the interior surface material and the insulation. It is also a common problem when batt ceiling insulation is installed before the ceiling drywall. And it is a problem when hard covers or draft stops are not installed over drop ceilings, lighting soffits, interior and exterior wall cavities, and other interstitial spaces to form an air barrier with which the insulation will maintain contact.

2. When different areas of the ceiling are intended to have different insulation levels, compliance documentation must separately report each area and its insulation characteristics in the compliance program. For example, if an attic furnace platform is installed with less insulation under the platform than in the remainder of the attic, then the compliance forms must have separate input for the insulation characteristics for the area under the platform and remainder of the ceiling insulation. Within each of the areas that are separately listed on compliance documentation, the insulation thickness and density must be uniform.

Examples of poorly installed insulation are shown in Figure 3-19.

With the performance method, designers and contractors can get credit for correctly installing insulation to eliminate or reduce the problems described above. Residential ACM Manual Appendix RH contains a procedure for verifying

[4] See the 2005 Residential ACM Manual, Appendix RH.

the quality of insulation installation in low-rise residential buildings. Through the performance approach, a compliance credit is offered when this procedure is followed by the insulation installer and verified by a qualified HERS rater.

The procedure and credit apply to wood-framed construction with wall stud cavities, ceilings, and roof assemblies insulated with mineral fiber or cellulose insulation in low-rise residential buildings. The procedure does not allow any credits for floor assemblies. The ceiling/roof constructions are presented in Joint Appendix IV, Tables IV.1 and IV.2, and the wall assemblies presented in IV.9.

The credit does not apply to other construction assemblies listed in Joint Appendix IV, including metal-framed walls and ceiling/roof assemblies and SIPS. For non-wood framed assemblies, approved computer programs do not modify the thermal performance of the building envelope component as described above.

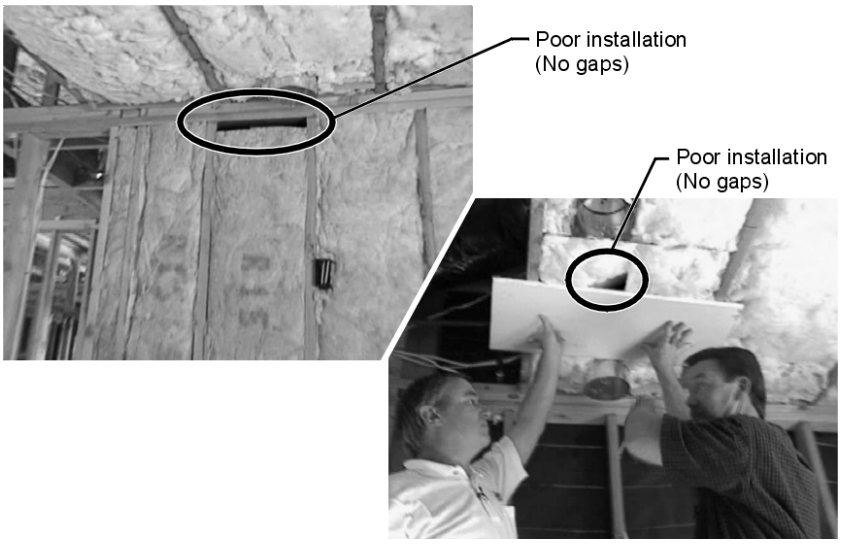

Source: California Energy Commission

Figure 3-19 – Examples of Poor Quality Insulation Installation

Sprayed Wall Insulation

See Energy Commission videos.

Sprayed wall insulation can be an effective way to deal with the irregularities of wall and ceiling cavities, especially the spaces around pipes, electric cables, junction boxes, and other equipment that is embedded in cavities. There are several types of sprayed insulation, but the two most common are cellulose (see Figure 3-20) and foamed plastic.

Cellulose is basically paper that has been treated for flame- and insect-resistance. The product is similar to the loose fill cellulose that is commonly used in attic insulation retrofits, but for walls it is mixed with a water- and starch-based binder. The binder causes the insulation to stick to the surfaces of the wall cavity. Excess insulation that extends past the wall cavity is scraped off with a special tool and recycled into the hopper with the fresh insulation.

Foam plastic insulation is sprayed into the cavity then expands to fill the cavity. Excess insulation is removed with a special tool. Waste is sometimes recycled. Icynene is one trade name.

U-factors for sprayed insulation are provided in *Joint Appendix IV*, (Tables IV.2, IV.5, IV.9, and IV.11) for both framed walls (wood or metal) as well as for rafter roofs (wood or metal). The thermal performance of cellulose and foamed plastic is similar, and one set of data is provided for both. The data in Joint Appendix IV assumes that the cavity of rafter roof constructions can be completely filled (no ventilation). Check with the building official in your area to verify that this method of insulation is acceptable.

Source: California Energy Commission

Figure 3-20 – Cellulose Insulated Wall

Metal Framing

A change from wood framing to metal framing can significantly affect compliance. Metal and wood framing are not interchangeable. Metal-framed wall construction generally requires a continuous layer of rigid insulation to meet the mandatory minimum wall insulation levels and/or the prescriptive requirements. In Joint Appendix IV, Tables IV.4 and IV.5 have U-factors for metal-framed ceiling/roof constructions. Table IV.11 has U-factors for metal-framed walls. Tables IV.23 and IV.24 have U-factors for metal-framed floors.

Cool Roofs

Compliance credit may be taken when a cool roof is installed when using the performance approach. The credit is available only if there is no radiant barrier installed. In the performance method calculations, the cooling benefit of a cool roof is assumed to be equal to that of a radiant barrier. There is no heating impact calculated for a cool roof (while there is some heating benefit assumed for a radiant barrier).

To be a cool roof material under the Standards, for low-slope roofs (rise to run of 2:12 or less), the material must be rated by the Cool Roof Rating Council (CRRC) (see http://www.coolroofs.org), and it must have an initial reflectance rating of at least 0.70 (rated by the CRRC) and an initial emittance of at least 0.75 (rated by the CRRC). There are some exceptions, one being for the more common higher roof slopes for homes: for residential buildings three stories or less (low-rise residential), concrete and clay tile roofs must have an initial reflectance rating of at least 0.40 (rated by the CRRC) and an initial emittance of at least 0.75 (rated by the CRRC). The other exceptions apply to metal roofs and liquid-applied roof coatings. Metal roofs, or any other roof with an initial emittance less than 0.75, must have a minimum initial reflectance determined by an equation given in §118(i)2 of the Standards and here: $[0.70 + 0.34 * (0.75 - \varepsilon_{initial})]$. Liquid-applied coatings are not commonly used on residential buildings, but the Standards allow for them as cool materials for low-slope applications under §118(i)3.

In addition to the questions and answers below about cool roofs, the Nonresidential Manual contains more cool roof information (including different questions and answers) in Section 3.4.

Example 3-14

Question

Is a cool roof required in new residential construction or in residential alterations or additions?

Answer

No. Cool roofs are a compliance option in all those cases and are not required. The performance approach must be used to get credit for cool roofs. Cool roof credit is not available if a radiant barrier is installed in the attic and credit has been taken for the radiant barrier.

Example 3-15

Question

I am a salesperson and represent some roofing products, and many of them are on the EPA's Energy Star list for cool roofing materials. Is this sufficient to meet Title 24 Standards?

Answer

No. Energy Star has different requirements for reflectance and NO requirements for emittance. The Cool Roof Rating Council (http://www.coolroofs.org) is the only entity currently recognized by the Energy Commission to determine what qualifies as a cool roof under Title 24.

Example 3-16

Question

Do the Title 24 Standards address high-slope residential roofs? In other words, do shingles need to be certified to meet emittance of 0.75? What about high-slope apartment complexes that are residential but not single family homes?

Answer

The Standards offer compliance credits for these other roofs under the performance method of compliance. Reflectance and emittance requirements apply for these other roofs if they are to receive credit. For high-slope roofs, roofing materials such as asphalt shingles and concrete or clay tiles need to be CRRC certified to meet required emittance and reflectance levels. (Clay or

cement roofing tiles have to meet a reflectance of only 0.40 to gain compliance credit for low-rise residential buildings.) As of this writing, few or no asphalt shingles have been certified by CRRC.

The cool roof Standards for low-rise residential buildings apply to apartment complexes that qualify as low-rise residential buildings whether they have high- or low-slope roofs.

Example 3-17

Question

How does a product get CRRC cool roof certification?

Answer

Any party wishing to have a product or products certified by CRRC should contact CRRC to get started - call toll-free (866) 465-2523 from inside the US or (510) 485-7176, or email info@coolroofs.org. CRRC staff will walk interested parties through the procedures. In addition, CRRC publishes the procedures in "CRRC-1 Program Manual," available for free on http://www.coolroofs.org or by calling CRRC. However, working with CRRC staff is strongly recommended.

Example 3-18

Question

I've heard the words reflectivity, reflectance, emissivity, and emittance? Can you explain?

Answer

"Reflectivity" and "reflectance" denote the same thing, but the Standards use only "reflectance" to avoid confusion. "Emissivity" and "emittance" denote the same thing, and again the Standards use only "emittance."

Example 3-19

Question

I understand reflectance, but what is emittance?

Answer

Even a material that reflects the sun's energy will still absorb some of that energy as heat; there are no perfectly reflecting materials being used for roofing. That absorbed heat undergoes a physical change (an increase in wavelength, for readers who remember physics) and is given off – emitted – to the environment in varying amounts by various materials and surface types. This emittance is given a unitless value between 0 and 1, and this value represents a comparison (ratio) between what a given material or surface emits and what a perfect blackbody emitter (again, recall physics) would emit at the same temperature.

A higher emittance value means more energy is released from the material or surface; scientists refer to this emitted energy as thermal radiation (as compared to the energy from the sun, solar radiation, with shorter wavelength). Emittance is a measure of the relative efficiency with which a material, surface, or body can cool itself by radiation. Lower-emitting materials become relatively hotter for not being able to get rid of the energy, which is heat. Roof materials with low emittance therefore hold onto more solar energy as heat, get hotter than high-emittance roofs, and with help

from the laws of physics, offer greater opportunity for that held heat to be given off downward into the building through conduction. More heat in the building increases the need for air conditioning for comfort. A cool roof system that reflects solar radiation (has high reflectance) and emits thermal radiation well (has high emittance) will result in a cooler roof and a cooler building with lower air-conditioning costs.

Log Homes Compliance Option

Log homes are an alternative construction type used in some parts of the state. Log home companies promote the aesthetic qualities of solid wood construction and can "package" the logs and deliver them directly to a building site. Some companies provide log wall, roof, and floor systems with special insulating "channels" or other techniques to minimize the effect of air infiltration between log members and to increase the thermal benefit of the logs.

Log walls do not have framing members like conventional wood stud walls. Therefore, the mandatory requirement for a minimum of R-13 wall insulation does not apply.

Otherwise, log walls must meet the same thermal requirements as other construction types, qualifying as either light mass or heavy mass walls depending on the thickness – remember a heat capacity (HC) of 8.0 Btu/ºF-ft² is equivalent to a heavy mass wall (40 lb/ft³). The prescriptive requirements for heavy mass walls are less stringent than the criteria for wood-framed walls. [Reduced insulation is allowed because the effects of the thermal mass (interior and exterior) can compensate for less insulation.]

The thermal performance of log walls is shown in Joint Appendix IV, Table IV.17. The U-factor ranges from 0.133 for a 6-in. wall to 0.053 for a 16-in. wall. The U-factor of an 8-in. wall is 0.102, which complies with the R-13 prescriptive requirements. U-factors for other log wall constructions (not shown in Joint Appendix IV) would have to be approved by the Energy Commission through the exceptional methods process.

Log walls have a heat capacity that is in excess of conventional construction. Joint Appendix IV [Table IV.17 16 – Thermal Properties of Log Home Walls] shows that a 6-in. wall has an HC of 4.04 which increases to 10.77 for a 16-in. wall. The thermal mass effects of log home construction can be accounted for within the performance approach.

Air infiltration between log walls can be considerably different among manufacturers depending upon the construction technique used. For purposes of compliance, infiltration is always assumed to be equivalent to a wood-frame building. However, the builder should consider using a blower door test to find and seal leaks through the exterior walls.

Straw Bale Construction

In 1995, the California Legislature passed AB1314, a bill that authorizes all California jurisdictions to adopt building codes for houses with walls constructed of straw bales. The bill provided guidelines for moisture content, bale density, seismic bracing, weather protection, and other structural requirements.

Several years ago, the Energy Commission, in conjunction with research and testing facilities, determined the thermal properties needed for straw bale walls to comply with the Standards. The thermal mass benefit of straw bale construction can be credited only through the use of the computer performance compliance approach by modeling straw bale construction using the heat capacity characteristics of the straw bales given below.

Straw bales that are 23 in. by 16 in. are assumed to have a thermal resistance of R-30, whether stacked so the walls are 23 in. wide or 16 in. wide. Performance data on other sizes of bales is not available. The minimum density of load bearing walls is 7.0 pounds per cubic foot, and this value or the actual density may be used for modeling straw bale walls in the performance approach. Specific heat is set to 0.32 Btu/lb/°F. Volumetric heat capacity (used in some computer programs) is calculated as density times specific heat. At a density of 7 lb/ft^3, for example, the volumetric heat capacity is 2.24 Btu/ft^3/°F.

The minimum dimension of the straw bales when placed in the walls must be 22 in. by 16 in. There are no restrictions on how the bales are stacked. Due to the higher resistance to heat flow across the grain of the straw, a bale laid on edge with a nominal 16-in. horizontal thickness has the same R-Value (R-30) as a bale laid flat.

Structural Insulated Panels (SIPS)

Structural Insulated Panels (SIPS) are an advanced method of constructing walls, roofs and floors. SIPS consist of rigid insulation (usually expanded polystyrene) sandwiched between two sheets of OSB or plywood. Little or no structural framing penetrates the insulation layer. Panels are typically manufactured at a factory and shipped to the job site in assemblies that can be as large as 8 ft by 20 ft.

In the field, the SIPS panels are joined in one of two ways (see Figure 3-21) and the choice affects thermal performance. The first way is to use wood spacers at the joints. These spacers allow thermal bridging but they are spaced no closer than about 48 in. The second way of joining SIPS panes is to use an OSB spline. With this technique, the insulation is notched or routed just in back of the OSB panels on each side. An OSB strip is then inserted into the pocket on each side of the panel and the assembly is fastened together with wood screws.

Joint Appendix IV, Table IV.10 has U-factors for SIPS wall assemblies. Table IV.3 has U-factors for roof/ceiling assemblies and Table IV.22 has U-factors for SIPS floor constructions. U-factors used for compliance must be taken from these tables. If manufacturers develop SIPS assemblies that are not adequately represented by choices in these tables, they may obtain approval of these assemblies through the Energy Commission's exceptional methods process.

The credits for quality insulation installation do not apply for SIPS construction.

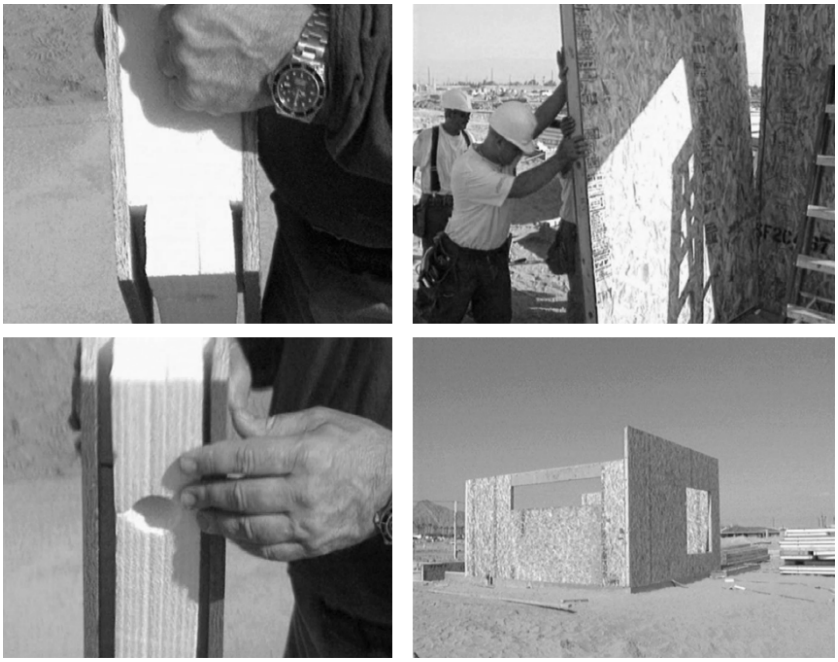

Source: California Energy Commission

Figure 3-21 – Methods of Joining SIPS Panels

Controlled Ventilation Crawlspace

CVC Eligibility Criteria in 2005 Residential ACM Manual

The Energy Commission has approved an exceptional method for buildings with raised floors that use foundation wall insulation and have automatically controlled crawl-space vents. The method is available as an option using the performance method. Refer to Figure 3-22.

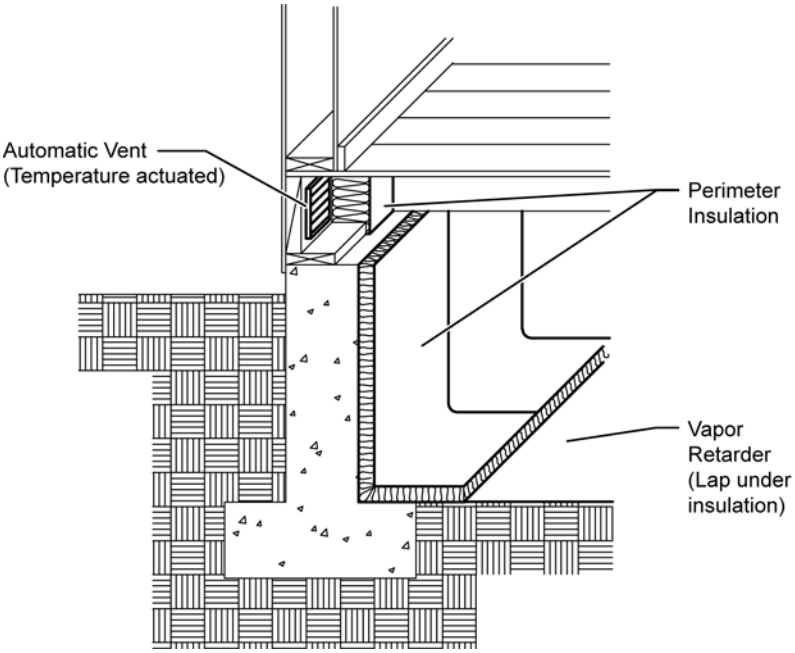

Figure 3-22 – Controlled Ventilation Crawl Space

The following eligibility criteria (from the *Residential ACM Manual*) are required in order to take credit for a controlled ventilation crawlspace.

- Drainage. Proper enforcement of site engineering and drainage, and emphasis on the importance of proper landscaping techniques in maintaining adequate site drainage, are critical.
- Ground Water and Soils. Local ground water tables at maximum winter recharge elevation should be below the lowest excavated site foundation elevations. Sites that are well drained and that do not have surface water problems are generally good candidates for this stem-wall insulation strategy. However, the eligibility of this alternative insulating technique is entirely at the building officials' discretion. Where disagreements exist, it is incumbent upon the applicant to provide sufficient proof that site drainage strategies will prevent potential problems.
- Ventilation. All crawl space vents must have automatic vent dampers to receive this credit. Automatic vent dampers must be shown on the building plans and installed. The dampers should be temperature-actuated to be fully closed at approximately 40°F and fully open at approximately 70°F. Cross ventilation consisting of the required vent area reasonably distributed between opposing foundation walls is required.
- Use of Foam Plastic Insulating Materials. Foam plastic insulating materials must be shown on the plans and installed when complying with the following requirements:

  a) Fire Safety—CBC Section 707.1. Products must be protected as specified. Certain products have been approved for exposed use in underfloor areas by testing and/or listing.

  b) Direct Earth Contact—Foam plastic insulation used for crawl-space insulation having direct earth contact must be a closed cell water resistant material and meet the slab edge insulation requirements for water absorption and water vapor transmission rate specified in the mandatory measures.
- Use of Mineral Wool Insulating Materials
- Fire Safety—CBC Section707.3. "All insulation including facings, such as vapor barriers or breather papers installed within ... crawl spaces ... shall have a flame-spread rating not to exceed 25 and a smoke density not to exceed 450 when tested in accordance with CBC Standard 8-1 Volume 3." In cases where the facing is also a vapor retarder, the facing shall be installed to the side that is warm in winter.
- Direct Earth Contact—Mineral wool batts must not be installed in direct earth contact unless protected by a vapor retarder/ground cover.
- Use of a Vapor Barrier (Ground Cover). A ground cover of 6 mil (0.006 in. thick) polyethylene, or approved equal, must be laid entirely over the ground area within crawl spaces.

- The vapor barrier must be overlapped six in. minimum at joints and must extend over the top of pier footings.
- The vapor barrier should be rated as 1.0 perm or less.
- The edges of the vapor barrier should be turned up a minimum of four inches at the stem wall.
- Penetrations in the vapor barrier should be no larger than necessary to fit piers, beam supports, plumbing and other penetrations.
- The vapor barrier must be shown on the plans and installed.
- If the crawl space ground slopes the vapor barrier should be spiked in place with 5 in. gutter nails.

3.4 Thermal Mass

Thermal mass consists of exposed tile floors over concrete, mass walls such as stone or brick, and other heavy elements within the building envelope that serve to stabilize indoor temperatures. Thermal mass acts for temperature much like a flywheel – it tends to keep things warmer when it is cold outside and keep things cooler when it is hot outside. In California's central valley and desert climates, the summer temperature range between night and day can be 30 ºF or more and thermal mass can be an effective strategy to reduce daytime cooling loads.

When thermal mass exists in exterior walls, it works to stabilize temperatures in two ways. First, there is a time delay between when the outside temperature of the wall reaches its peak and when the inside of the wall reaches its peak. For an 8-in. to 12-in. concrete wall, this time delay is on the order of 12 hours. Second, there is a dampening effect whereby the temperature range on the inside of the house is less than the temperature range on the outside of the house. These effects are illustrated in Figure 3-23.

Interior thermal mass is especially important in passive solar buildings. Passive solar buildings have large areas of south-facing fenestration. The large window area means that solar gains are quite high on winter days when the south sun is low in the sky (passive solar buildings should have south overhangs to block the sun in the summer). Large window areas also contribute to increased heat loss in the evening and at night. Without thermal mass, the south glass would create uncomfortably warm temperatures in the day and uncomfortably cold temperatures at night. Thermal mass in passive solar buildings works best if it is positioned so that the sun strikes it during the day. It can then better absorb the solar radiation for release later in the day when the space begins to cool.

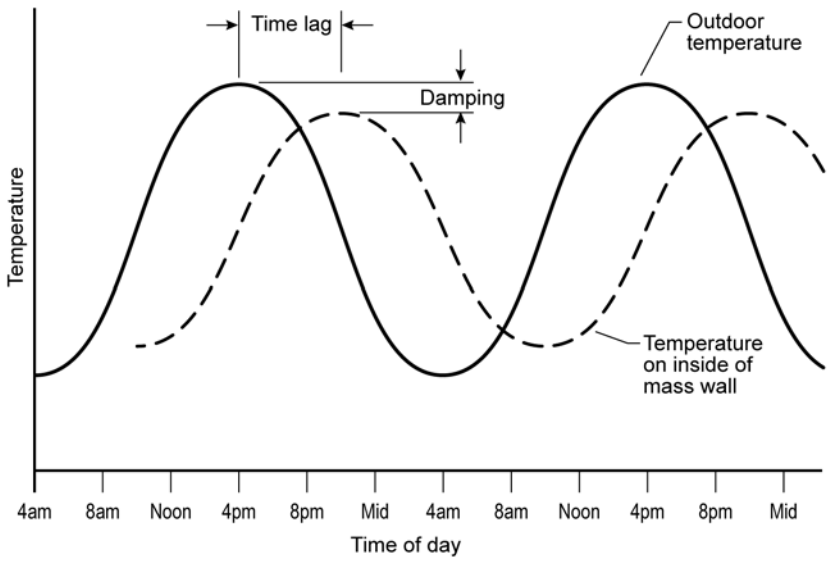

Figure 3-23 – Thermal Mass Performance

3.4.1 Mandatory Measures

There are no mandatory measures for thermal mass.

Prescriptive Requirements

§151(f)5
Residential ACM Manual Appendix RB
Table 151-A

Package D has no requirements for thermal mass, however Package C requires mass. The prescriptive requirements call for a minimum interior mass capacity (IMC). The IMC requirement for slab-on-grade buildings is 2.36 times the ground floor area. For raised floor buildings, the mass requirement is 0.18 times the ground floor area.

The Package C interior mass requirement for slab-floor buildings is equivalent to having 20% of the *ground floor slab area* exposed to the conditioned space.[5] A Package C slab-floor building may meet its thermal mass requirement by either calculating the IMC of all of the mass elements in the building, or by exposing 20% of a 3.5-in. concrete slab. Exposing the slab means covering it with tile or other materials (other than carpet) that have minimum insulating ability. See Compliance Options below for acceptable methods of “exposing” the thermal mass elements.

The interior mass requirement for Package C raised-floor buildings is based on having mass equivalent in performance to 5% of the ground floor area consisting of exposed 2-in. thick concrete.[6]

---

[5] This assumes a standard weight (140lb/ft^3) concrete slab at least 3.5 in. thick.

[6] The concrete is assumed to have a volumetric heat capacity of 28, a conductivity of 0.98, a surface conductance of 1.3 and no thermal resistance on the surface. The

IMC is a measure of the total thermal mass in a low-rise residential building. The procedure for calculating IMC is documented in Appendix RB of the Residential ACM Manual. This procedure is used to show compliance with the Package C prescriptive requirement (using Form WS-1R) as well as for credit under the performance approach.

Each material that contributes to the IMC has a unit interior mass capacity (UIMC) associated with it. For instance, the UIMC associated with a 6-in. exposed concrete slab is 5.1 Btu/ºF-ft². If the slab is covered with a carpet, the UIMC is only 1.9 Btu/ºF-ft². The UIMC of a solid-grouted 8-in. concrete masonry wall exposed on both sides is 9.6 Btu/ºF-ft². Tables RB-1, RB-2, and RB-3 from Appendix RB of the Residential ACM Manual have UIMC data for common interior mass materials.

The Residential ACM Manual Appendix RB process is to determine the surface area of each qualifying mass element, to multiply the area times the UIMC for that element and to sum the IMC values for all the mass elements. This procedure is shown in Equation RB-1. This method allows for multiple mass types common in low-rise residential construction.

Example 3-20

Question

A Package C building has 1,000 ft² of first floor area which is slab-on-grade and another 800 ft² of second floor area. What is the requirement for IMC?

Answer

The total IMC requirement is the ground floor area of 1,000 ft² times the requirement of 2.36 Btu/ºF- ft². The requirement is therefore 2,360 Btu/ºF. The second floor is not considered in determining the requirement.

3.4.2 Compliance Options

When the performance method is used, credit is offered for increasing thermal mass in buildings. However, credit for thermal mass in the proposed design may be considered only when the proposed design qualifies as a high mass building. A high mass building is one with thermal mass equivalent to having 30% of the conditioned slab floor exposed and 15% of the conditioned non-slab floor exposed 2-in.-thick concrete.

IMC is used to determine if a building qualifies as a high mass building, following the procedure in Residential ACM Manual Appendix RB. This procedure is automated in Energy Commission approved computer programs so there is no need to perform the calculations by hand.

heat capacity and conductivity performance equivalent referred to is that of standard 140 lb/ft^3 concrete.

3.5 Infiltration and Air Leakage

3.5.1 Overview

Infiltration is the *unintentional* replacement of conditioned air with unconditioned air through leaks or cracks in the building envelope. This is a major component of heating and cooling loads.

Reduction in building envelope air leakage can result in significant energy savings especially in climates with more severe winter and summer conditions. It also can result in improved building comfort, reduced moisture intrusion, and fewer air pollutants due to leakage from garages or attics.

Ventilation is the *intentional* replacement of conditioned air with unconditioned air through open windows or mechanical ventilation. Ventilation in residential buildings is typically achieved by opening windows either to provide natural ventilation for cooling purposes or to reduce stuffiness or odors.

Credit is offered through compliance methods for options that reduce building envelope air leakage. When using measured reduced infiltration compliance options to achieve credit and the building envelope becomes especially tight, some form of positive mechanical ventilation must be considered. The ventilation rate can be more carefully controlled with continuous mechanical ventilation, which can be provided through either supply fans or exhaust fans. However, using exhaust fans can depressurize the building which can lead to health threats from backdrafting of combustion byproducts from certain appliances.

ASHRAE Standard 62 *Ventilation for Acceptable Indoor Air Quality* specifies a minimum effective air exchange rate for residences. This minimum rate is the combination of infiltration, ventilation through windows and continuous mechanical ventilation. For typical California homes adequate ventilation is provided by a combination of infiltration and occasional window opening. However, as the building envelope is made tighter, windows need to be opened more frequently.

From an energy standpoint there is an optimal level of building envelope tightness when additional ventilation is provided by opening windows alone. If the envelope is too tight, there is a penalty for having to open the windows too much. If the envelope is not tight enough, then infiltration is excessive.

If building envelope leakage is reduced to a level that the Energy Commission considers to be “unusually tight” per the California Mechanical Code, it is necessary to provide continuous mechanical supply ventilation. With supply ventilation, it is no longer necessary to open windows to maintain good indoor air quality.

3.5.2 Mandatory Measures

Fenestration

Mandatory measures for air leakage for fenestration products are covered in Section 3.2.2.

Joints and Other Openings

§117

Air leakage through cracks around windows, doors, walls, roofs and floors can result in higher energy use for home heating and cooling than necessary. The following openings in the building envelope must be caulked, gasketed, weatherstripped or otherwise sealed (see Figure 3-24):

- Exterior joints around window and door frames, including doors between the house and garage, between interior HVAC closets and conditioned space, between attic access and conditioned space, and between wall sole plates, floors, exterior panels and all siding materials;
- Openings for plumbing, electricity, and gas lines in exterior walls, ceilings and floors;
- Openings in the attic floor (such as where ceiling panels meet interior and exterior walls and masonry fireplaces);
- Openings around exhaust ducts such as those for clothes dryers; and
- All other such openings in the building envelope

Note also that range hoods must have dampers.

Alternative approved techniques may be used to meet the mandatory caulking requirements for exterior walls. These include, but are not limited to:

- Continuous stucco,
- Caulking and taping all joints between wall components (e.g., between slats in wood slat walls),
- Building wraps, and
- Rigid wall insulation installed continuously on the exterior of the building.

Weatherstripping is required for all field-fabricated operable windows and doors (other windows and doors must meet infiltration requirements and be laboratory tested). This includes doors between the garage and the house, between interior HVAC closets and conditioned space, and between the attic access and conditioned space.

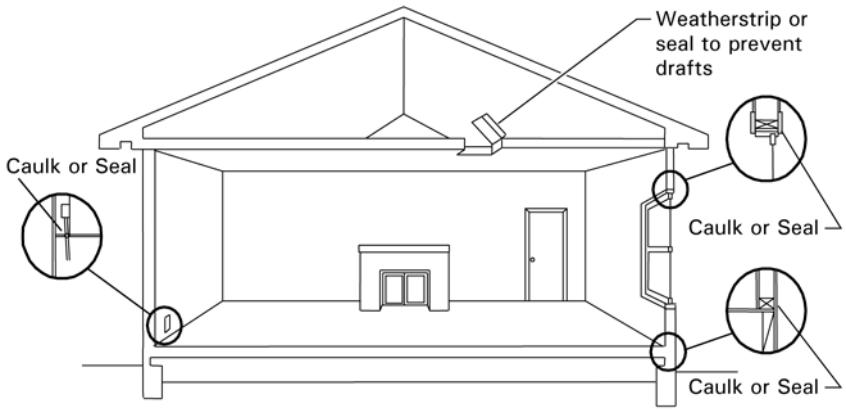

Figure 3-24 – Caulking and Weatherstripping

Fireplaces, Decorative Gas Appliances and Gas Logs

§150 (e)

The Standards have mandatory measurements to limit infiltration associated with fireplaces, decorative gas appliances, and gas logs. Fireplace efficiency can be greatly improved through proper air control, and reduced infiltration is also a benefit when the fireplace is not operating (the majority of the time for most houses).

Installation of factory-built or masonry fireplaces (see Figure 3-25) must include the following:

- Closable metal or glass doors covering the entire opening of the firebox;
- Doors covering the entire opening of the firebox that can be closed when the fire is burning. A combustion air intake that is at least 6 in.2 to draw air from outdoors equipped with a readily accessible, operable and tight-fitting damper or combustion air control device;
- A combustion air intake that is at least 6 in.2 to draw air from outdoors equipped with a readily accessible, operable and tight-fitting damper or combustion air control device (EXCEPTION: An outside combustion air intake is not required if the fireplace is installed over concrete slab flooring and the fireplace is not located on an exterior wall); and
- A flue damper with a readily accessible control. (EXCEPTION: When a gas log, log lighter, or decorative gas appliance is installed in a fireplace, the flue damper shall be blocked open if required by the manufacturer's installation instructions or the California Mechanical Code.)

Continuous burning pilot lights are prohibited for fireplaces as well as for decorative gas appliances and gas logs. In addition, indoor air may not be used for cooling a firebox jacket when that indoor air is vented to the outside of the building.

When a gas log, log lighter, or decorative gas appliance is installed in a fireplace, the flue damper must be blocked open if required by the manufacturer's installation instructions or the California Mechanical Code.

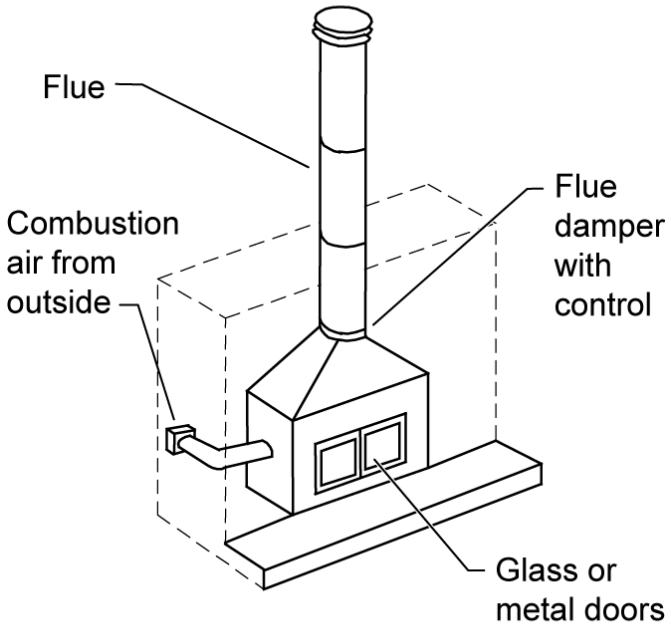

Figure 3-25 – Fireplace Installation

Example 3-21

Question

Are closable glass or metal doors required for decorative gas appliances?

Answer

No. The only requirements that apply to decorative gas appliances are the prohibition on continuously burning pilot lights and the prohibition on using indoor air to cool the firebox if the air is then vented to outdoors. If there is a question about whether a device is a fireplace, which requires glass doors, the distinction is that a fireplace has a hearth, chamber or other place in which a solid fuel fire or a decorative gas log set may be burned, while a decorative gas appliance is for visual effect only and merely simulates a fire in a fireplace.

Example 3-22

Question

If I want to have a gas log or some other device in the fireplace of my home, can I block open the damper? Can it have a standing pilot light?

Answer

Standards §150(e)1 (which contains the requirements for fireplaces, decorative gas appliances, and gas logs), allows the flue damper to be blocked open if required by either the manufacturer's installation instructions or the California Mechanical Code. Continuously burning pilot lights in these appliances are prohibited by §150(e)2.

Example 3-23

Question

§150(e)2 of the Standards states that no fireplace, decorative gas appliance or gas log can be installed if it has a continuously burning pilot light. The California Mechanical Code requires all gas appliances installed in California to have a manually operated shut-off valve, accessible to the inhabited space. Does this shut-off valve meet the intent of this section?

Answer

Not if the pilot light must be manually extinguished when the appliance is off. A unit that meets the intent of this section will have a pilot light that cannot stay on when the unit is off.

Example 3-24

Question

A building plan specifies a freestanding gas heater that is decorative; however, the equipment is vented and is rated as a room heater. Is it acceptable that this appliance have a pilot light?

Answer

Yes. Since this equipment is rated as a room heater, it can have a continuous burning pilot light.

Example 3-25

Question

Do decorative gas appliances need glass or metal doors?

Answer

Decorative gas appliances do not need doors. The door requirement applies to masonry or factory-built fireplaces only. If a decorative gas appliance is installed inside a fireplace, the fireplace needs doors. Consult with the manufacturer of the decorative gas appliance regarding combustion air requirements.

3.5.3 Compliance Options

There are several ways to take credit for infiltration reduction measures that go beyond the mandatory measures. Credit requires use of the performance compliance method and is implemented through lower air leakage assumptions. One option is blower-door testing to get an estimate of actual leakage area. Alternatively, credit is available for testing and sealing ducts and for installation of a “house wrap” (air retarding wrap).

Approved computer programs use a default specific leakage area (SLA) of 4.9 for proposed designs that do not take compliance credit for building envelope sealing. Algorithms approved by the Energy Commission keep track of the combination of infiltration, ventilation through opening windows, and continuous

mechanical ventilation and model conformance with the ASHRAE 62 standard. Approved computer programs can be used to determine optimal building envelope leakage levels that can be specified for compliance purposes.

Reduced Duct Leakage

If compliance credit is not taken for reduced building envelope air leakage through diagnostic testing (as described in detail below), a special "default" compliance credit can be taken for building envelope leakage reduction. To qualify for this credit all requirements for reduced duct leakage (see Section 4.4.3 of this manual), including diagnostic testing, must be met. A "default" reduction in SLA of 0.50 is allowed for this credit. This adjustment reduces the standard SLA from 4.9 to 4.4.

Air-Retarding Wrap Credit

§150(f)

If compliance credit is not taken for reduced building envelope air leakage through diagnostic testing, a special "default" compliance credit can be taken for building envelope leakage reduction resulting from installation of an air-retarding wrap.

Compliance credit is provided for a "default" reduction in SLA of 0.50 for an SLA of 4.4. This credit may be combined with the credit for reduced duct leakage, reducing the SLA by a total of 1.0, from 4.9 to 3.9.

To qualify for the "default" compliance credit, an air-retarding wrap must be tested and labeled by the manufacturer to comply with ASTM E1677-95 (2000), *Standard Specification for an Air Retarder (AR) Material or System for Low-Rise Framed Building* Walls, and have a minimum perm rating of 10. Insulating sheathing and building paper do not qualify as air-retarding wraps.

The air-retarding wrap must be installed per the manufacturer's specifications. In particular, it must meet the following installation requirements:

- The air-retarding wrap must be applied continuously,
- All tears or breaks must be repaired with manufacturer approved tape,
- All horizontal seams must be lapped in a shingle-like manner and taped,
- All vertical seams must be lapped,
- All windows and penetrations must be taped or caulked, and
- the air-retarding wrap must be taped or otherwise sealed at the slab junction.

When compliance credit is taken for an air-retarding wrap, the computer program will automatically include it and the above specifications in the *Special Features and Modeling* Assumptions section of the CF-1R to facilitate inspection by the local enforcement agency. Compliance credit for an air-retarding wrap does not require HERS rater verification.

Source: California Energy Commission

Figure 3-26 – Air-Retarding Wrap

Blower Door Testing

Additional credit is available through the performance approach when the house is specially sealed. This credit requires that the reduced building envelope leakage be verified through diagnostic testing. The testing process involves closing all the windows and doors, pressurizing the house with a special fan, usually positioned in a doorway (see Figure 3-27, and measuring the leakage. While the house is pressurized, it is usually possible to locate leaks and to correct them so that the house leakage reaches a desirable level.

Source: California Energy Commission

Figure 3-27 – Blower Door Testing

Changing the input for SLA in the computer calculation methods will show how much compliance credit is achievable with reduced infiltration. Compliance programs will report the corresponding target value for blower door test results, which is usually expressed in terms of $cfm50_H$ (cfm of air leakage when the home is pressurized to 50 Pascals). The default SLA value for a home that has not been tested is 4.9 ft² of leakage area per 10,000 ft² of floor area.

The procedure for performing the test and making the measurements is one that has been worked out through a consensus process involving experts in the field. The procedure is documented as ASTM E-779-03, *Standard Test Method for Determining Air Leakage Rate by Fan Pressurization*.

The target $cfm50_H$ value required for the blower door testing will be listed in the *HERS Required Verification* section on the CF-1R. The installer must perform tests to demonstrate that building envelope leakage has been reduced to the target $cfm50_H$ level or lower and document the blower door test results on the CF-6R. An approved HERS rater must also do blower door testing to verify that the target $cfm50_H$ has been achieved. The HERS rater testing is documented on the CF-4R.

Mechanical Outside Air Ventilation

Especially tight building envelopes require mechanical ventilation. Continuous mechanical ventilation (either exhaust or supply ventilation) must be installed when the target SLA is below 3.0. When the target SLA is below 1.5, only supply mechanical ventilation is acceptable. When mechanical ventilation is required, it

must provide at least 0.047 cfm/ft² of floor area; for example, a 2,000 ft² house would need 94 cfm of continuous outside air ventilation. Since there is a penalty for mechanical ventilation in terms of additional fan energy and additional heat loss/gain, reducing infiltration below an SLA of 3.0 is rarely advisable.

The need for continuous mechanical ventilation is reported automatically in the *HERS Required Verification* section of the CF-1R. Both reduced infiltration and mechanical ventilation must also be reported on the *Special Features and Modeling Assumptions* section of the CF-1R.

The mechanical ventilation features must also be documented in the homeowner's manual provided by the builder to the homeowner. This documentation must include instructions that describe how to use the operable windows or continuous mechanical ventilation for proper ventilation.

The total power consumption of the continuous supply ventilation fans and continuous exhaust fans are required inputs when compliance credit is taken for reduced building envelope leakage and mechanical ventilation is installed.

3.6 Vapor Barriers and Moisture Protection

A vapor barrier or retarder is a special covering over framing and insulation that protects the wall assembly components from possible damage due to moisture condensation. During cold weather, the inside of the house is warm and moist (from breathing, showers, etc.) and the outside is cold and dry. Moisture moves from more to less and from warm to cold. When the moisture (in vapor form) reaches a point in the wall or roof assembly that has a temperature below the dew point, it will condense into liquid water. Water build up can cause structural damage, create mold that may contribute to indoor air quality problems and can cause the insulation to lose its effectiveness.

3.6.1 Mandatory Measures

§150(g)

In climate zones 14 and 16, a continuous vapor barrier, lapped or joint sealed, must be installed on the conditioned space side of all insulation in all exterior walls, on the floors of unvented attics, and on floors over unvented crawl spaces to protect against moisture condensation. If a building has a controlled ventilation crawl space (see Section 3.3.7), a vapor barrier must be placed over the earth floor of the crawl space to reduce moisture entry and protect insulation from condensation.

The Standards define a vapor barrier as material with a permeance of one perm or less. A perm is a measure of resistance to the transmission of water vapors and is equal to one grain of water vapor transmitted per ft^2 per hour per inch of mercury pressure difference. The Energy Commission has determined that interior painted surfaces may qualify for meeting the vapor barrier requirement if the paint product is tested to have a rating of one perm or less. For all types of vapor barriers, care should be taken to seal penetrations such as electric outlets on exterior walls.

Products such as a continuous polyethylene sheet or wall board with foil backing qualify as vapor barriers, if according to the appropriate testing procedure, they meet the vapor barrier permeance rating of one perm or less. Kraft paper backing on batt insulation, under certain circumstances, may be used to meet the continuous vapor barrier requirement. Specifically, the paper backing must meet the vapor barrier permeance rating, and the product must be installed properly.

For proper installation of batt insulation with kraft paper backing (see Figure 3-28):

1. The kraft paper should *not* be stapled to the sides of framing members; instead, the kraft paper tabs on each side of the insulation batt must be fastened to the face of the conditioned side of the framing member, and

2. At the ends of the insulated cavity, the Kraft paper must overlap the framing members to create a continuous barrier at the wall cavity.

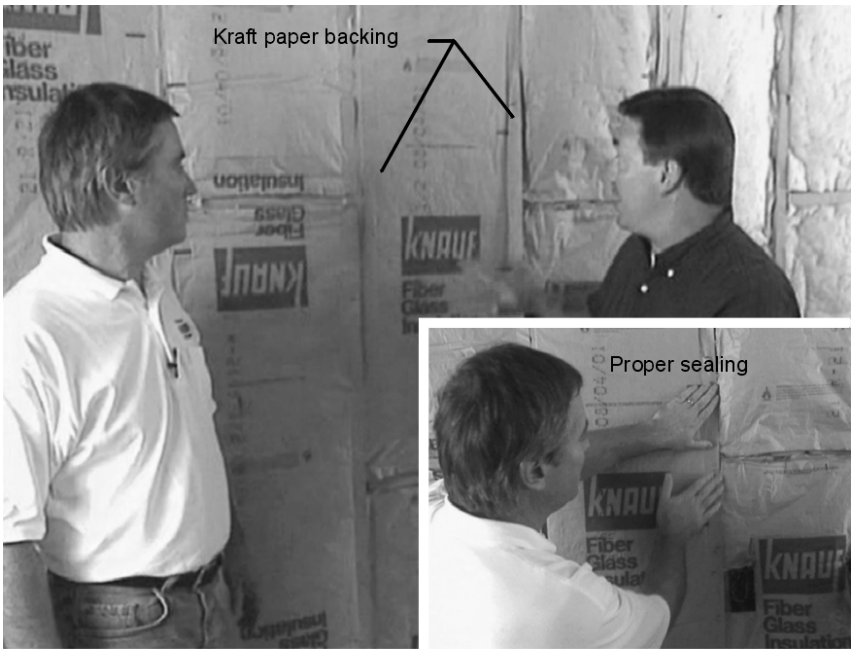

Source: California Energy Commission

Figure 3-28 – Vapor Barriers with Kraft Paper

3.7 Compliance and Enforcement

Chapter 2 addresses general compliance and enforcement issues, the roles and responsibilities of each of the major parties, the compliance forms, and the process for field verification and/or diagnostic testing. This section highlights some of the compliance and enforcement issues specifically for the building envelope.

3.7.1 Design

The initial compliance documentation consists of the Certificate of Compliance (CF-1R) and the mandatory measures checklist (MF-1R). These documents must be included on the plans and specifications. The CF-1R has a section where special envelope features are listed. The following are envelope features that should be listed in this section if they exist in the proposed design:

- Solar gain targeting (for sunspaces)
- Inter-zone ventilation
- Radiant barriers
- Non-default vent heights
- Vent area greater than 10% of the window area
- Exterior shades
- High thermal mass
- Metal-framed walls
- Sunspace with interzone surfaces
- Cool roofs
- Air retarding wrap
- Reduced infiltration (blower door)
- Quality insulation installation.

Plan checkers should verify that insulation levels, fenestration U-factors, and SHGCs listed on the CF-1R are consistent with the plans and specifications.

3.7.2 Construction

During the construction process, the contractor and/or the specialty contractors complete the necessary sections of the Installation Certificate (CF-6R):

- Fenestration/Glazing. The glazing contractor lists all the fenestration products that are installed in the building along with the model number and manufacturer, the U-factor, and the SHGC.
- Building Envelope Leakage Diagnostics. This is applicable only if the builder/contractor does blower door testing to reduce building envelope leakage.
- Insulation Installation Quality Certificate. The insulation contractor documents the insulation installation quality features that have been followed as shown on the CF-6R checklist.

- Description of Insulation. The insulation contractor documents the insulation materials installed in the walls, roofs, and floors along with the brand name of the materials and the thermal resistance.

The building official (field inspector) will visit the site multiple times during the construction process. The purpose of these visits is to verify that the equipment and materials installed are consistent with the plans and specifications.

3.7.3 Field Verification and/or Diagnostic Testing

The HERS rater may visit the site to complete building envelope portions of the Certificate of Field Verification and Diagnostic Testing (CF-4R). There are two sections of this form that relate to the building envelope. Minimum Requirements for Infiltration Reduction Compliance Credit and Requirements for Quality Insulation Installation Credit.

3.8 Glossary/Reference

The Joint Appendices contain in Appendix I a glossary of terms. For definitions of terms used in this manual refer to that section of the Joint Appendices. The following terms either expand on those definitions or are not listed there.

Fenestration Terminology

The following terms are used in describing fenestration products.

- Tinted. Darker gray, brown or green visible tint. Also, low-e or IG unit with an SHGC less than 0.5.
- Clear. Little if any observable tint. An IG unit with an SHGC of 0.5 or greater.
- Operable. The fenestration product can be opened for ventilation.
- Fixed. The fenestration product cannot be opened.
- Center of Glass U-factor. The U-factor measured only through glass at least 2.5 in. from the edge of the glass or dividers.
- Divider (Muntin). An element that actually or visually divides different lites of glass. It may be a true divided lite, between the panes, and/or applied to the exterior or interior of the glazing.
- Thermal Break Frame. Includes metal frames that are not solid metal from the inside to the outside, but are separated in the middle by a material, usually vinyl or urethane, with a significantly lower conductivity.
- Non-metal Frame. Includes vinyl, wood, or fiberglass. Vinyl is a polyvinyl chloride (PVC) compound used for frame and divider elements with a significantly lower conductivity than metal and a

similar conductivity to wood. Fiberglass has similar thermal characteristics. Non-metal frames may have metal strengthening bars entirely inside the frame extrusions or metal-cladding only on the surface.

- Gap Width. The distance between glazings in multi-glazed systems (e.g., double-or triple-glazing). This dimension is measured from inside surface to inside surface. Some manufacturers may report "overall" IG unit thickness which is measured from outside surface to outside surface.
- Grille: See Divider.
- IG Unit: Insulating glass unit. An IG unit includes the glazings, spacer(s), films (if any), gas infills, and edge caulking.
- Light or Lite. A layer of glazing material, especially in a multi-layered IG unit. Referred to as panes in §116 when the lites are separated by a spacer from inside to outside of the fenestration.
- Low-e Coating. A transparent or semitransparent metallic coating applied to glazing that reduces the emittance of the surface and that usually affects the solar heat gain of the glass. Low-e stands for low-emissivity. The coating (or film) is generally between glazings in double-pane or triple-pane fenestration products.
- Soft Coat: A low-e coating applied through a sputter process. See separate glossary term for low-e coating.
- Hard Coat. A pyrolytic low-e coating that is generally more durable but less effective than a soft coat. See separate glossary term for low-e coating.
- Muntin. See Divider.
- Spacer. A material that separates multiple panes of glass in an insulating glass unit.
- Mullion. A frame member that is used to join two individual windows into one fenestration unit.

Low-e Coatings

Low-emissivity coatings are special coatings applied to the second or third surfaces in double-glazed windows or skylights. As the name implies the surface has a low emittance. This means that radiation from that surface to the surface it “looks at” is reduced. Since radiation transfer from the hot side of the window to the cool side of the window is a major component of heat transfer in glazing, low-e coatings are very effective in reducing the U-factor. They do nothing, however, to reduce losses through the frame.

In the residential market, there are two kinds of low-e coatings: low solar gain and high solar gain. Low-solar gain low-e coatings are formulated to reduce air conditioning loads. Fenestration products with low solar gain low-e coatings typically have an SHGC of 0.40 or less, and meet the SHGC prescriptive

requirements for California's cooling climates. Low-solar gain low-e coatings are sometimes called spectrally selective coatings because they filter much of the infrared and ultra-violet portions of the sun's radiation while allowing visible light to pass through. High solar gain low-e coatings, by contrast, are formulated to maximize solar gains. Such coatings would be preferable in passive solar applications or perhaps in mountainous climates where heating loads are significant and there is little air conditioning.

Low-e coatings are applied in one of two ways. Pyrolytic low-e coatings are applied while the glass is being manufactured and while it is still very hot. Pyrolytic hard coat low-e coatings are sometimes called "hard" low-e coatings because they are more durable and resistant to scratching. Sputtered low-e coatings are applied after the glass leaves the float line and has been cut to size. The cut glass passes through a series of vacuum chambers where layers of metal are deposited on the surface of the glass to create precise solar optical properties. Sputter coatings are sometimes called "soft" coatings because they are less durable. Both soft and hard low-e coatings are typically positioned on the second or third surface so that they are protected from abrasion.

Another advantage of low-e coatings, especially low solar gain low-e coatings, is that when they filter the sun's energy, they generally remove between 80% and 85% of the ultraviolet light that would otherwise pass through the window and damage fabrics and other interior furnishings. This is a major advantage for homeowners and can be a selling point for builders.

National Fenestration Rating Council

The National Fenestration Rating Council (NFRC) is the entity recognized by the Energy Commission to supervise the rating and labeling of fenestration products. NFRC publishes the Certified Product Directory, containing NFRC certified U-factors and SHGC values for thousands of products (see http://www.nfrc.org or call 301-589-1776.

Fenestration product performance data used in compliance calculations must be provided through the NFRC rating program and must be labeled by the manufacturer with the rated U-factor and SHGC in accordance with §10-111 procedures.

R-value

R-value is a measure of a material's thermal resistance, expressed in ft^2(hr)°F/Btu. R-value is the inverse of U-factor. A higher R-value and lower U-factor indicate higher energy efficiency.

The rated R-value of fiberglass (batt) insulation is based upon its fully expanded thickness and may be obtained from the Joint Appendices, Appendix IV.2 and Appendix IV.5 or from the manufacturer's literature. When the insulation is compressed, the R-value is reduced. The most common insulation compression occurs with R-19 and R-22 insulation batts installed in locations with a nominal 6-in. framing that is actually only 5.5 in. thick. To achieve its rated insulation value, an R-19 batt of insulation expands to a thickness of six and one quarter inches. If it is compressed into 2x6 framing with an actual depth of 5.5 inches, the insulation R-Value is lowered to 17.8.

Solar Heat Gain Coefficient

Solar heat gain coefficient (SHGC) is a measure of the relative amount of heat gain from sunlight that passes through a fenestration product. SHGC is a number between zero and one that represents the ratio of solar heat that passes through the fenestration product to the total solar heat that is incident on the outside of the window. A low SHGC number (closer to 0) means that the fenestration product keeps out most solar heat. A higher SHGC number (closer to 1) means that the fenestration product lets in most of the solar heat.

U-factor of Fenestration Products

U-factor is a measure of how much heat passes through a construction assembly or, for this chapter of the manual, a fenestration product. The lower the U-factor, the more energy efficient the product. The units for U-factor are Btu of heat loss each hour per ft^2 of window area per degree ºF of temperature difference (Btu/hr-ft^2-ºF). U-factor is the inverse of R-value.

The U-factor considers not just the losses through the center of the glass, but also losses at the edge of the glass where a metal spacer is typically used to separate the double-glazing panes, losses through the frame, and losses through the mullions. For metal-framed windows, the frame losses can be quite significant, even larger in some cases than heat losses through the glass.

Estimating the rate of heat transfer through a fenestration product is complicated by the variety of frame configurations for operable windows, the different combinations of materials used for sashes and frames, and the difference in sizes available in various applications. The NFRC rating system makes the differences uniform, so that an entire fenestration product line is assumed to have only one typical size. The NFRC rated U-factor may be obtained from a directory of certified fenestration products, directly from a manufacturer's listing in product literature, or from the product label.

4. Building HVAC Requirements

4.1 Overview

4.1.1 Introduction and Organization

This chapter addresses the requirements for heating ventilating and air conditioning (HVAC) systems. All requirements are presented in this chapter so that it may serve as a single source of information for mechanical engineers and mechanical contractors.

The chapter is organized by system component or sub-system:

- Heating Equipment. The first section addresses the requirements for heating equipment, including mandatory measures, prescriptive requirements, and compliance options.
- Cooling Equipment. The second section addresses cooling equipment requirements.
- Air Distribution Ducts and Plenums. This section covers mandatory requirements such as duct insulation and construction practices as well as prescriptive requirements including duct diagnostic testing and sealing.
- Controls. This section addresses the requirements for setback thermostats and the compliance option for zonal control.
- Alternative Systems. This section covers a number of systems that are less common in California new construction, including hydronic heating, radiant floor systems, evaporative cooling, gas cooling, ground-source heat pumps, and wood space heating.
- Compliance and Enforcement. In this section the documentation requirements at each phase of the project are highlighted.
- Refrigerant Charge Testing. More information on the refrigerant charge testing procedure is included in this section, Glossary/Reference.

Chapter 8 covers the heating and cooling requirements for additions to existing dwellings and to alterations to existing heating and cooling systems.

4.1.2 Prescriptive Packages

The prescriptive requirements for HVAC systems vary depending on the prescriptive package selected. With package D, there are two options: one that

requires field verification and/or diagnostic testing and another that does not. The option that does not requires higher equipment efficiency and better windows.

Package C permits electric resistance space heating, but requires greater insulation levels and other measures. Field verification and diagnostic testing of ducts is always required under Package C.

4.1.3 Performance Method

By using the performance compliance method, designers can take credit for a number of HVAC efficiency improvements. These compliance credits are described below under the individual Compliance Options sections. Examples of measures that receive credit include improved equipment efficiency, reduced air handler fan watt draw, good duct design, adequate air conditioner air flow, and properly sized cooling capacity.

In addition to offering compliance credits, the performance method described in Chapter 7 provides flexibility for designs that do not necessarily meet all the prescriptive requirements.

4.1.4 What's New for 2005

Here is a summary of new HVAC measures for 2005:

- Split system air conditioners with single-phase power must have a minimum seasonal energy efficiency ratio (SEER) of 13.0 (as of January 23, 2006). Single-phase heat pump efficiency will also increase to SEER 13 and HSPF of 7.7.
- For the prescriptive packages, more duct insulation is required. For Package D, in climate zones 14 through 16, R-8 insulation is required. R-4.2 is required in climate zones 6 through 8, and R-6 is required in other climate zones. For Package C, R-8 is required in all climate zones.
- Duct sealing is now prescriptively required in climate zones 2 and 9 through 16 when an air conditioner or furnace is replaced and when new ducts are added or ducts are altered in an existing home.
- A number of new compliance options are offered to provide greater flexibility in complying with the standards when using the Performance Method. These include ducts covered by attic insulation, efficient air handler and duct systems, properly sized air conditioners, adequate airflow, high EER air conditioners, and gas cooling.
- There is no longer a prescriptive requirement for air conditioner airflow verification, though the requirement for testing refrigerant charge remains (with a thermostatic expansion valve as an option).

4.1.5 Common System Types

The typical new California home in the central valley and the desert has a gas furnace and a split system air conditioner. In some areas, a heat pump provides both heating and cooling, eliminating the furnace. In coastal climates and in the mountains, air conditioning is rare and most new homes are heated by gas furnaces. Heating and cooling is typically distributed to each of the rooms through air ducts. Most of the mandatory measures and prescriptive requirements are based on this type of system.

Although the Standards focus on the typical system, they also apply to other systems as well, including hydronic systems, where hot water is distributed to provide at least some of the heat to conditioned space; in contrast with conventional systems that distribute heated air to air heat the space. Electric resistance systems are also used in some areas and applications, although it is difficult for them to comply under the Standards. Ground-source heat pump (geo-exchange) systems are also used, especially in areas where there is no gas service. This chapter focuses mostly on typical systems, but a section is provided to deal with the alternative systems as well.

4.1.6 Appliance Standards and Equipment Certification

§110 – General

§111 – Appliance Standards

Most heating and cooling equipment installed in new California homes is regulated by the National Appliance Efficiency Conservation Act (NAECA) and/or the California *Appliance Efficiency Regulations*. Both the federal and state appliance standards apply to the manufacture of new equipment and are applicable for equipment used in replacements, repairs or for any other purpose. The appliance regulations are enforced at the point of sale, while the energy efficiency standards covered by this compliance manual are enforced at the building department.

The following types of heating and cooling equipment are covered by the appliance standards. For this equipment, the manufacturer must certify that the equipment complies with the *Appliance Efficiency Regulations* at the time of manufacture.

• Room air conditioners • Room air conditioning heat pumps • Central air conditioners with a cooling capacity of less than 135,000 Btu/hr • Central air conditioning heat pumps	• Gas-fired central furnaces • Gas-fired boilers • Gas-fired furnaces • Gas-fired floor furnaces • Gas-fired room heaters • Gas-fired duct furnaces • Gas-fired unit heaters.

The Appliance Efficiency Regulations do not require certification for:

- Infrared heaters
- Electric resistance heaters
- Oil-fired furnaces (some are voluntarily listed with certified gas-fired furnaces).

If any equipment does not meet the federal appliance efficiency standards, it may not be sold in California. Any equipment covered by the *Appliance Efficiency Regulations* and sold in California must have the date of manufacture permanently displayed in an accessible place on that equipment. This date is frequently included as part of the serial number.

Note: Equipment manufactured before the effective date of a new standard may be sold and installed in California indefinitely, as long as a performance approach demonstrates energy compliance of the building using the lower efficiency of the relevant appliances.

4.2 Heating Equipment

This section addresses the requirements for heating equipment, including furnaces, boilers, heat pumps and electric resistance equipment.

4.2.1 Mandatory Measures

Equipment Efficiency

§111 and §112(a)

Appliance Efficiency Regulations

The efficiency of most heating equipment is regulated by NAECA (the federal appliance standard) and the California Appliance Efficiency Regulations. These regulations are not contained in the Building Energy Efficiency Standards but are published separately. These regulations are referenced in §111 of the Standards. The Appliance Efficiency Regulations include definitions for all types of equipment. The energy efficiency of larger equipment is regulated by §112(a) of the Standards. See the Nonresidential Compliance Manual for information on larger equipment.

Gas and Oil Space Heaters

The current *Appliance Efficiency Regulations* require that the Annual Fuel Utilization Efficiency (AFUE) of all new central furnaces be at least 78 percent for equipment with output capacity less than 225,000 Btu/hr. Central furnaces with outputs greater than or equal to 225,000 Btu/hr are rated according to their Thermal (or Steady State) Efficiency. Gas and oilfired central boilers have the following AFUE or Combustion Efficiency requirements:

Table 4-1 – Minimum Heating Efficiency for Boilers

Source: California Appliance Efficiency Regulations

Type	Capacity	AFUE	Combustion Efficiency
Gas Steam Boilers (Single Phase)	Less than 300,000 Btu/h	75%	
Gas Packaged Boilers	300,000 Btu/h or larger		80%
Other Boilers (Single Phase)	Less than 300,000 Btu/h	80%	
Oil Package Boilers	300,000 Btu/h or larger		83%

Non-central gas space heaters shall be certified to have AFUE values greater than or equal to those listed in Table 4-2 below:

Table 4-2 – Minimum Heating Efficiency for Non-Ducted, Non-Central Gas Fired Heating Equipment

Source: California Appliance Efficiency Regulations

Type	Capacity	AFUE
Wall Furnace (fan type)	up to 42,000 Btu/hour	73%
	over 42,000 Btu/hour	74%
Wall Furnace (gravity type)	up to 10,000 Btu/hour	59%
	over 10,000 Btu/hour up to 12,000 Btu/hour	60%
	over 12,000 Btu/hour up to 15,000 Btu/hour	61%
	over 15,000 Btu/hour up to 19,000 Btu/hour	62%
	over 19,000 Btu/hour up to 27,000 Btu/hour	63%
	over 27,000 Btu/hour up to 46,000 Btu/hour	64%
	over 46,000 Btu/hour	65%
Floor Furnace	up to 37,000 Btu/hour	56%
	over 37,000 Btu/hour	57%
Room Heater	up to 18,000 Btu/hour	57%
	over 18,000 Btu/hour up to 20,000 Btu/hour	58%
	over 20,000 Btu/hour up to 27,000 Btu/hour	63%
	over 27,000 Btu/hour up to 46,000 Btu/hour	64%
	over 46,000 Btu/hour	65%

The AFUE of mobile home furnaces shall be certified not to be less than 75 percent.

Heat Pumps and Electric Heating

Table 4-3 summarizes the energy efficiency requirements for heat pumps. Note that the minimum heating seasonal performance factor (HSPF) changes on January 23, 2006 for single phase air source heat pumps.

Table 4-3 – Minimum Heating Efficiency for Heat Pumps
Source: California Appliance Efficiency Regulations

Equipment Type	Appliance Efficiency Regulations Reference	Configuration / Size	Minimum Heating Efficiency
Room heat pumps	Table B-2	Any	Cooling standard only
Packaged terminal heat pumps	Table B-3	Any	1.3 +[0.00016 x Cap)] COP
Single phase air source heat pumps (NAECA)	Table C-2	< 65,000 Btu/h Cooling Capacity	Packaged 6.6 (7.7) HSPF [1] Split 6.8 (7.7) HSPF [1]
		Through-the-wall < 65,000 Btu/h Cooling Capacity	See Appliance Efficiency Regulations
		Small duct high velocity < 65,000 Btu/h Cooling Capacity	See Appliance Efficiency Regulations
Three-phase air source heat pumps	Table C-3	< 65,000 Btu/h	See Appliance Efficiency Regulations
Water-source heat pumps	Table C-5	< 135,000 Btu/h	4.2 COP
		≥ 135,000 Btu/h, < 240,000 Btu/h	2.9 COP
1. HSPF values in parentheses indicate minimum efficiency effective January 23, 2006.			

There are no minimum appliance efficiency standards for electric-resistance or electric-radiant heating systems.

Heat Pump Controls

§112(b) , EXCEPTION to §150(i)

Any heat pump with supplementary electric resistance heating must have controls that have two capabilities to limit the electric resistance heating. The first is to set the cut-on and cut-off temperatures for compression and supplementary heating at different levels. For example, if the heat pump begins heating when the inside temperature reaches 68 ºF, the electric resistance heating is set to come on if the temperature gets below 65 ºF; and there is an opposite off mode such that if the heat pump shuts off when the temperature reaches 72 ºF, the back-up heating shuts off at 68ºF.

The second control capability prevents the supplementary electric resistance heater from operating when the heat pump alone can meet the heating load, except during defrost. There is a limited exception to this second function for “smart thermostats” that provide: intelligent recovery, staging, ramping, or another control mechanism that prevents the unnecessary operation of supplementary electric resistance heating when the heat pump alone can meet the heating load.

To meet the setback thermostat requirements, a setback thermostat for a heat pump must be a “smart thermostat” that minimizes the use of supplementary heating during startup and recovery from setbacks.

Note: Room air conditioner heat pumps are not required to comply with setback thermostat requirements.

Equipment Sizing

§150(h)

The Standards do not set limits on the sizing of heating equipment, but they do require that heating loads be calculated for new heating systems. Oversized equipment typically operates less efficiently and can create comfort problems due to excessive cycling and high airflow.

Acceptable load calculation procedures include methods described in the ASHRAE Handbook – Equipment, ASHRAE Handbook – Applications, ASHRAE Handbook – Fundamentals, SMACNA Residential Comfort System Installation Manual, or ACCA Manual J.

The Standards require that the outdoor design conditions for load calculations be selected from Joint Appendix II, and that the indoor design temperature for heating load calculations be 70 ºF. The outdoor design temperature must be no lower than the heating winter median of extremes as listed in the Joint Appendix. If the actual city location for a project is not included in the Joint Appendix, or if the data given for a particular city does not match the conditions at the actual site as well as that given for another nearby city, consult the local building department for guidance.

The minimum size of residential heating systems is regulated by the California Building Code (CBC), Section 310.11. The CBC requires that the heating system be capable of maintaining a temperature of 70ºF at a distance three feet above the floor throughout the conditioned space of the building.

The load calculations must be submitted with compliance documentation when requested by the building department. The load calculations may be prepared by 1) the documentation author and submitted to the mechanical contractor, 2) a mechanical engineer, or 3) the mechanical contractor who is installing the equipment.

Standby Losses and Pilot Lights

§115

Fan-type central furnaces may not have a continuously burning pilot light. This requirement does not apply to wall furnaces, floor furnaces or any gravity type furnace. Household cooking appliances also must not have a continuously burning pilot light except for those without an electrical supply voltage connection and in which each pilot consumes less than 150 Btu/hr.

§112(c)

Larger gas-fired and oil-fired forced air furnaces with input ratings ≥ 225,000 Btu/h (which is bigger than a typical residential furnace) must also have an intermittent ignition or interrupted device (IID), and either power venting or a flue damper. A vent damper is an acceptable alternative to a flue damper for furnaces where combustion air is drawn from the conditioned space. All furnaces with input ratings ≥ 225,000 Btu/h, including electric furnaces, that are not located within the conditioned space must have jacket losses not exceeding 0.75% of the input rating.

4.2.2 Prescriptive Requirements

§151(f) 6. Heating System Type

Prescriptive Package D requires that a gas heating system or a heat pump be installed. The minimum energy efficiency of the heating equipment is specified by the mandatory measures (see above).

Package C allows electric resistance and electric radiant heating, but insulation and other measures are more stringent.

Under the performance compliance method, a small credit is available for electric radiant panel heating systems relative to electric baseboard systems.

4.2.3 Compliance Options

With the performance compliance method, credit can be taken for selecting high efficiency heating equipment, such as a high efficiency furnace or heat pump. With a furnace, for example, the minimum requirement is an AFUE of 78%, but units are available with AFUE of 90% or better.

4.3 Cooling Equipment

This section addresses the requirements for primary cooling equipment.

4.3.1 Mandatory Measures

Equipment Efficiency

§111 and §112(a)

Appliance Efficiency Regulations

The efficiency of most cooling equipment is regulated by NAECA (the federal appliance standard) and the California Appliance Efficiency Regulations. These regulations are not contained in the Building Energy Efficiency standards but rather in separate documents. These regulations are referenced in §111. The Appliance Efficiency Regulations include definitions for all types of equipment. The energy efficiency of larger equipment is regulated by §112(a) of the Standards. See the Nonresidential Compliance Manual for information on larger equipment.

Central, Single Phase Air Conditioners and Air Source Heat Pumps (under 65,000 Btu/h)

The central, single phase air conditioners and air source heat pumps that are most commonly installed in residences have a smaller capacity than 65,000 Btu/h. The Appliance Efficiency Regulations for this equipment require minimum Seasonal Energy Efficiency Ratios (SEER).

The Seasonal Energy Efficiency Ratio of all new central, single phase air conditioners and air source heat pumps with output less than 65,000 Btu/h shall

be certified not to be less than the values listed below. Note that the minimum efficiency for this equipment changes on January 23, 2006.

Table 4-4 – Minimum Cooling Efficiencies for Central Air Conditioners and Heat Pumps
Source: California Appliance Efficiency Regulations

Appliance	Type	SEER	
		Prior to 1/23/06	On and After 1/23/06
Central Air Conditioners	Split System	10.0	13.0
	Single Package	9.7	13.0
Central Air Source Heat Pumps	Split System	10.0	13.0
	Single Package	9.7	13.0

Other Air Conditioners and Heat Pumps

Appliance Efficiency Regulations

The current Appliance Efficiency Regulations for larger central air conditioners and heat pumps, and for all room air conditioners and room air conditioner heat pumps shall be certified by the manufacturer to not to be less than the values listed in Table 4-5 and 4-6.

Table 4-5 – Minimum Cooling Efficiency for Larger Central Air Conditioners and Heat Pumps
Source: California Appliance Efficiency Regulations

Equipment Type	Size Category	EER
Central Air Conditioners	65,000 Btu/h up to 135,000 Btu/h	8.9
Central Air Source Heat Pumps	65,000 Btu/h up to 135,000 Btu/h	8.9
Central Water Source Heat Pumps	Up to 135,000 Btu/h	12.0

Table 4-6 – Minimum Cooling Efficiency for Non-Central Space Cooling Equipment

Including Room Air Conditioners; and Room Air Conditioner Heat Pumps; Package Terminal Air Conditioners (PTAC); Package Terminal Heat Pumps (PTHP);
Source: California Appliance Efficiency Regulations

Equipment Type	Size Category (Input)	Minimum Efficiency
Room Air Conditioners, with Louvered Sides	< 6,000 Btu/h	9.7 EER
	≥6,000 Btu/h and < 8,000 Btu/h	9.7 EER
	≥ 8,000 Btu/h and < 14,000 Btu/h	9.8EER
	≥14,000 Btu/h and < 20,000 Btu/h	9.7 EER
	≥20,000 Btu/h	8.5 EER
Room Air Conditioners, without Louvered Sides	< 6,000 Btu/h	9.0 EER
	≥6,000 Btu/h and < 8,000 Btu/h	9.0 EER
	≥ 8,000 and <20,000 Btu/h	8.5 EER
	≥20,000 Btu/h	8.5 EER
Room Air Conditioner Heat Pumps with Louvered Sides	< 20,000 Btu/h	9.0 EER
	≥ 20,000 Btu/h	8.5 EER
Room Air Conditioner Heat Pumps without Louvered Sides	< 14,000 Btu/h	8.5EER
	≥ 14,000 Btu/h	8.0 EER
Casement-Only Room Air Conditioner	All Capacities	8.7 EER
Casement-Slider Room Air Conditioner	All Capacities	9.5 EER
PTAC and PTHP	≤ 7,000 Btu/h	8.88 EER
	> 7,000 and < 15,000 Btu/h	10.0 – (0.00016 x Cap) EER
	≥ 15,000 Btu/h	7.6 EER

Insulation for Refrigerant Lines in Split System Air Conditioners

§150(j)2
§150(m)9

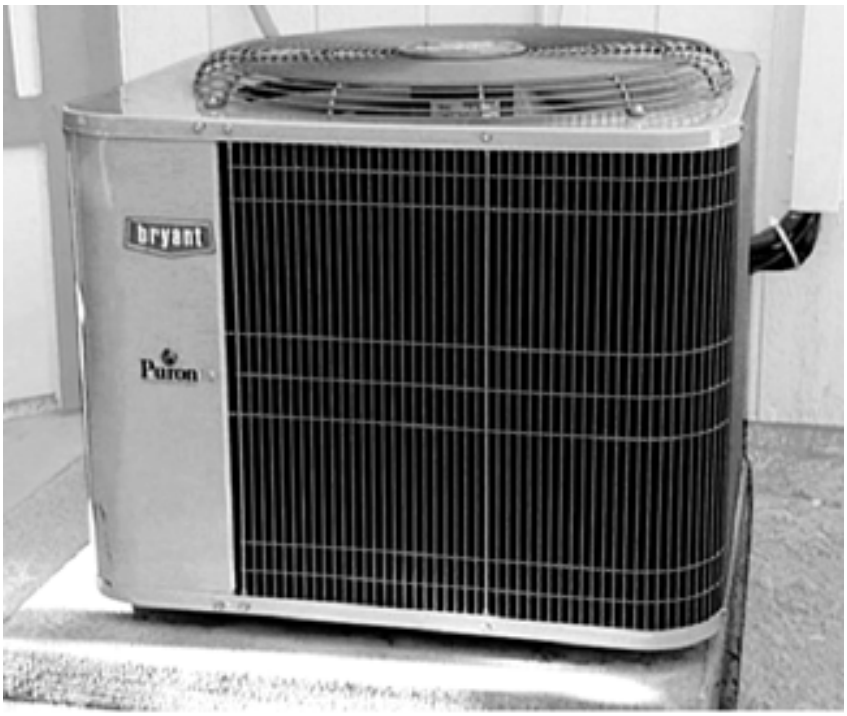

Source: California Energy Commission

Figure 4-1 – Outdoor Compressor/Condenser Unit

Two refrigerant lines connect the indoor and outdoor units of split system air conditioners and heat pumps: the liquid line (the smaller line) and the larger suction (cooling) line. The liquid line is at an elevated temperature, and heat escaping from it is helpful; therefore, it should not be insulated. However, the suction line carries refrigerant vapor that is cooler than ambient in the summer and (with heat pumps) warmer than ambient in the winter. This line, less than or equal to 2 in. in diameter, must be insulated with at least 0.75 in. of insulation per the requirements of §150 (j) 2.

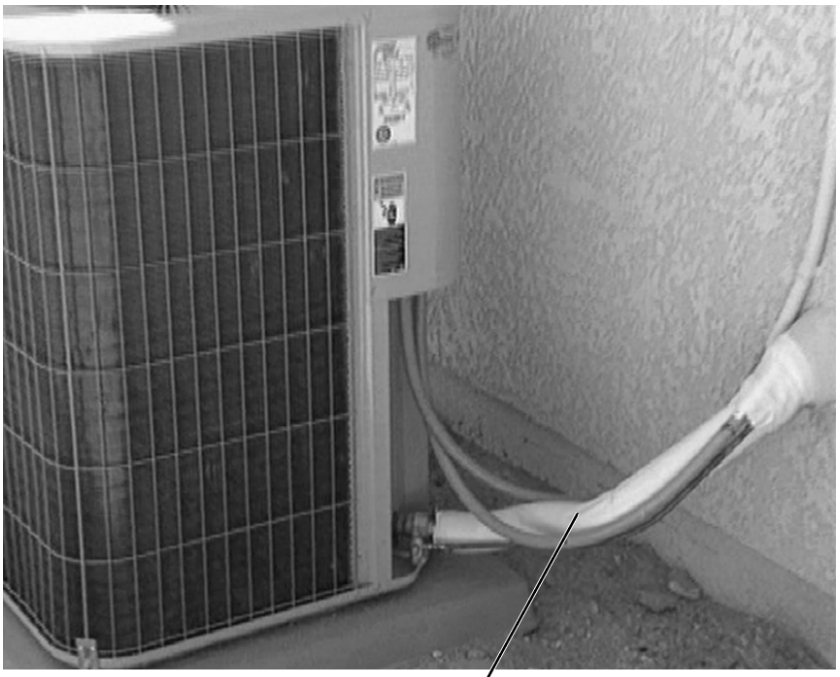

Source: California Energy Commission

Figure 4-2 – Refrigerant Line Insulation

Insulation used with the suction line must be protected from physical damage or from UV deterioration. Pipe insulation in outdoor locations is typically protected by an aluminum or sheet metal jacket, painted canvas, plastic cover, or coating that is water retardant and UV resistant. See §150(m)9 in the Standards. See *Figure 4-1.*

Equipment Sizing

§150(h)

Just as for heating equipment, the Standards do not set mandatory measures for cooling equipment sizing. However, the Standards do offer a compliance credit for properly sized air conditioning equipment when using the computer performance method (Appendix RF in the *Residential ACM Manual*). Avoiding over sizing is especially important for cooling equipment because efficiency degrades when the system cycles on and off frequently. See the Compliance Options section below for more details on the credit.

The Standards also require that cooling load calculations be performed using the ACM Manual calculation (specified in ACM Manual Appendix RF) or other load calculation procedures as listed for heating equipment in Cooling Equipment Sizing section above. Compliance credit is available when equipment is sized according to the ACM Manual calculation, and HERS rater field verification confirms that the installed equipment is consistent with the sizing calculations.
The outdoor design conditions for load calculations must be selected from Joint Appendix II, and the indoor design temperature for cooling load calculations must be 75ºF. The outdoor design temperature must be no higher than the 1.0% Cooling Dry Bulb and Mean Coincident Wet Bulb values.

As for heating calculations, the cooling load calculations must be submitted with compliance documentation when requested by the building department. The load calculations may be prepared by 1) the documentation author and submitted to the mechanical contractor, or 2) a mechanical engineer, or 3) the mechanical contractor who is installing the equipment.

4.3.2 Prescriptive Requirements

§151(f)7

Both prescriptive packages, C and D, require testing of refrigerant charge or installation of a thermostatic expansion valve (TXV) for split system equipment in climate zones 2 and 8 through 15. Package D offers an alternative to testing that requires additional efficiency in other areas.

Refrigerant Charge Measurement

The prescriptive standards require that a HERS rater verify that split system air conditioning and heat pumps have the correct refrigerant charge. The procedures that HERS raters are to follow are documented in Appendix RD in the 2005 *Residential ACM Manual*. Packaged units are not required to have refrigerant charge measurement.

The measurement and regulation of refrigerant charge can significantly improve the performance of air conditioning equipment. Refrigerants are the working fluids in air conditioning and heat pumps systems that absorb heat energy from one area (the evaporator) and transfer it to another (the condenser).

Refrigerant charge refers to the actual amount of refrigerant present in the system. Excessive refrigerant charge can lead to premature compressor failure and insufficient charge can cause compressors to overheat.

Thermostatic Expansion Valves

Option 1: TXVs may be used as an alternative to diagnostic testing of the refrigerant charge in split system air conditioning and heat pumps. TXVs are used in air conditioners or heat pumps to control the flow of refrigerant into the evaporator in response to the superheat of the refrigerant leaving it. The valve is placed upstream from the evaporator inlet and is connected to a temperature-sensing bulb. As the gaseous refrigerant leaves the evaporator, the TXV senses its temperature and pressure and adjusts the flow rate to maintain proper conditions. Eligible systems must provide a removable door for valve verification by a certified HERS rater. An access door (or removable panel) is not required if the TXV is in a readily accessible location. Readily accessible means capable of being reached quickly for operation, repair, or inspection, without requiring climbing or removing obstacles or resorting to access equipment. The body of the TXV can be anywhere that is warmer than the location of the sensing bulb (including outside the plenum). It is preferable that the refrigerant manifold be close to the TXV body.

Option 2: Visually verify that a sensing bulb is running from inside the unit and that it is visible outside of the unit. You do not need to open the unit to complete

this verification. Please note that the sensing bulb will be attached to the suction line and should be covered by insulation. You will need to verify the sensing bulb by either removing sufficient insulation to see it or by feel.

Option 3: This option is designed to allow a rater to verify a TXV based upon manufacturer's nameplate data. To use this option three steps must be completed.

Step One: Observe that for a particular brand and model that the manufacturer has installed a TXV at the factory. This may be accomplished by the air conditioner distributor or installer taking the cover off of one unit per subdivision and showing the rater that the TXV has been installed.

Step Two: Determine that the manufacturer's nameplate on the coil indicates that a TXV has been factory installed. The rater may ask for clarification of the nameplate information from the distributor.

Step Three: Verifythat the nameplate information on each unit being inspected indicates that a TXV has been installed in that unit.

Source: California Energy Commission

Figure 4-3 – Checking Refrigerant Charge

Alternative to Package D Refrigerant Charge Testing

As described in the footnotes to Table 151-C of the Standards (Appendix B of this document), measurement of refrigerant charge or a TXV is not required if additional savings measures are implemented. The required measures vary by climate zone. For example, in climate zones 2, 8, and 9, a glazing U-factor of 0.38 and glazing SHGC of 0.31 may be substituted for the field verification requirements. In the hotter climates, higher air conditioner efficiency is required in addition to better glazing, and in colder climates, higher efficiency heating efficiency is required.

Table 4-7 – Alternatives to Duct Sealing and Refrigerant Charge Measurement in New Construction Package D only (gas heat or heat pump space heating)

Climate Zone	Alternative to Duct Sealing and Refrigerant Charge Measurement/TXV All other requirements of Package D must be met in all climate zones
CZ 1, 16	Glazing U-factor ≤ 0.42 U, Furnace ≥ 90% AFUE or heat pump ≥7.6 HSPF.
CZ 2, 8, 9	Glazing U-factor ≤ 0.38 and SHGC ≤ 0.31
CZ 3, 5, 6, 7	Glazing U-factor ≤ 0.42
CZ 4	Glazing U-factor≤ 0.38 and SHGC ≤ 0.36
CZ 10, 11, 12	Glazing U-factor ≤ 0.38 and SHGC ≤ 0.31 Air conditioning ≥ SEER 13
CZ 13	Glazing U-factor ≤ 0.38 and SHGC ≤ 0.31 Air conditioning ≥ SEER 15
CZ 14	Glazing U-factor ≤ 0.38 and SHGC ≤ 0.31 Air conditioning ≥ SEER 16

4.3.3 Compliance Options

There are several options for receiving compliance credit related to the cooling system. These credits are available through the performance compliance method.

High Efficiency Air Conditioner

Air conditioner designs are available with efficiencies equivalent to a SEER up to 18.0, which is significantly better than the minimum federal efficiency of SEER 10.0 (or 13.0 starting January 23, 2006). Savings can be achieved by choosing an air conditioner that exceeds the minimum efficiency requirements.

The EER is the full load efficiency at specific operating conditions. It is possible that two units with the same SEER can have different EERs. Using the performance compliance method, credit is available for specifying an air conditioner with an EER greater than 10 (see the compliance program vendor's compliance supplement). When credit is taken for a high EER, field verification by a HERS rater is required (see Appendix RI in the *Residential ACM Manual*).

Air Handler Watt Draw

Credit is also available for demonstrating that a high efficiency fan and duct system with a low wattage fan has been installed. This credit can be achieved by selecting a unit with a high efficiency air handler fan and/or careful attention to efficient duct design. The performance compliance method allows the user's proposed fan power to be entered into the program, and credit will be earned if it is lower than the default of 0.015 watts per Btu of rated cooling capacity (see the compliance program vendor's supplement). After installation, the contractor must test the actual fan power of each system using the procedure in Appendix RE of the *Residential ACM Manual* and show that it is equal or less than what was proposed in the compliance analysis. This credit requires verification by a HERS rater.

As mentioned above in the Compliance Options section for heating equipment, air handlers with Energy Conservation Measures can be much more efficient than standard motors.

Adequate Airflow

In California's dry climates, adequate air handler airflow rates are required to deliver air conditioner rated sensible capacity, total capacity, and efficiency. Low airflow rates can also lead to ice buildup on the cooling coil and to compressor failure. The Standards offer a compliance credit for adequate airflow, which is defined as a minimum of 400 cfm per ton (operating normally with a wet cooling coil or 450 cfm per ton when tested with a dry cooling coil). The air flow for each system must be tested using one of the methods described in Appendix RE of the *Residential ACM Manual*. When an adequate airflow credit is claimed, the duct design, layout, and calculations must be submitted to the local enforcement agency and to a certified HERS rater. This credit requires verification by a HERS rater.

Maximum Cooling Capacity

With the performance method, credit is offered for cooling systems that are smaller than a prescribed criteria calculated for each proposed design. To receive credit, the installed air conditioner must be no bigger than the limit calculated by the compliance software. This credit is available only in combination with the credits for duct sealing and testing, adequate airflow, and refrigerant charge testing or TXV.

An electrical input exception may be used to achieve the same credit allowed for the maximum cooling capacity for compliance software credit. This exception allows a large equipment size to be installed if it does not use more power than the properly sized equipment. Requirements for this alternative are described in Appendix RF in the *Residential ACM Manual*.

4.4 Air Distribution Ducts and Plenums

Ducts have a big impact on HVAC system efficiency; therefore, air distribution systems face a number of mandatory measures and prescriptive requirements. The prescriptive requirements say that ducts be sealed and tested in all climates. There are also a number of compliance credits available related to duct design.

Duct efficiency is affected by the following parameters:

- duct location (attic, crawlspace, basement, inside conditioned space, or other),
- specifics of the unconditioned space, e.g., presence of a radiant barrier,
- duct insulation,
- duct surface area, and

- air leakage of the duct system.

In performance calculations, duct efficiency can be calculated in one of two ways: (1) default input assumptions or (2) diagnostic measurement values. The computer program will use default assumptions for the proposed design when the user does not intend to make improvements in duct efficiency. There is a compliance penalty if the ducts are not sealed and tested.

4.4.1 Mandatory Measures

Minimum Insulation

§150(m)1

In all cases, unless ducts are enclosed entirely in conditioned space, the minimum allowed duct insulation value is R-4.2. Note that higher values may be required by the prescriptive requirements as described below.

§150(m)5

For the purpose of determining installed R-value of duct wrap, the installed thickness of insulation must be assumed to be 75 % of the nominal thickness due to compression.

Connections and Closures

§150(m)1

§150(m)2

§150(m)3

The Standards set a number of mandatory measures related to duct connections and closures. These measures address both the materials used for duct sealing and the methods that may be used. Refer to the sections of the Standards listed above for details.

Connections between metal ducts and the inner core of flexible ducts must be mechanically fastened.

Openings must be sealed with mastic, tape, or other duct closure systems that meet the applicable requirements of UL 181, UL 181A, UL 181B or with aerosol sealant systems that meet the requirements of UL 723.

If mastic or tape is used to seal openings greater than 1/4 in., the combination of mastic and either mesh or tape must be used.

Building spaces such as cavities between walls, support platforms for air handlers, and plenums defined or constructed with materials other than sealed sheet metal, duct board, or flexible duct must not be used for conveying conditioned air including return air and supply air. The practice of using drywall materials as the interior surface of a return plenum is not allowed. Building cavities and support platforms may contain ducts. Ducts installed in cavities and support platforms must not be compressed to cause reductions in the cross sectional area of the ducts. Although a HERS rater may examine this as a part

of his or her responsibilities when involved in a project, the enforcement of these minimum standards for ducts is the responsibility of the building official.

Example 4-1

Question

I am installing a fan coil in the hallway of a multifamily dwelling unit in a space constructed of sheetrock. The sheetrocked space is formed by the original hallway ceiling at the top, the hallway sidewalls, and sheetrock across the bottom of the space with a return grill mounted in the bottom sheetrock. Does a duct have to be installed connecting the fan coil return to the return register?

Answer

This type of installation may be used only when a fan-coil unit is installed in a sheetrocked space that is constructed and sealed to meet the California Building Code (CBC) Title 24, Part 2, Volume 1. Section 310.2.2 of the CBC states that "walls and floors separating dwelling units in the same building … shall not be of less than one-hour fire-resistance construction between two dwelling units." Section 709.3.2.2 of the CBC states that "when a fire-resistive floor or floor ceiling assemblies are required, voids and intersections of these assemblies shall be sealed with an approved material. "

Also, Section 150(m) of the Standards states as follows:

"Building cavities, support platforms for air handlers, and plenums defined or constructed with materials other than sealed sheet metal, duct board or flexible duct shall not be used for conveying conditioned air."

There are two acceptable methods of complying with section 150 (m) for the fan coil space that is the subject of the question.

1. A return duct is installed between the fan coil and the return register.

2. If the builder demonstrates that the sheetrocked space in which the fan coil is installed is not a plenum, the duct in method "1" is not required.

The California Mechanical Code has the following definition of a plenum:

"PLENUM is an air compartment or chamber including uninhabited crawl spaces, areas above ceilings or below a floor, including air spaces below raised floors of computer/data processing centers, or attic spaces, to which one or more ducts are connected and which forms part of either the supply air, return air or exhaust air system, other than the occupied space being conditioned."

To demonstrate the sheetrocked space in which the fan coil is installed is not a plenum, the builder must demonstrate that it is part of the conditioned space. This fan coil space can be considered part of the conditioned space if it is demonstrated that the space

1. is within the building envelope, and

2. air leakage pathways (e.g., infiltration connections to building cavities) are sealed such that the space is more connected to the inside of the envelope than to outside the envelope.

There are two ways of demonstrating that air leakage pathways are properly sealed.

1. The easiest way is to construct the fan coil space so that an inspector is able to visually determine that the space has no leakage paths. No testing is required for this approach. The inspector must be able to inspect all joints and seams in the sheetrock, particularly horizontal seams that are above and below the sheetrocked bottom of the space, and to verify that no horizontal seams are behind the sheetrocked bottom or the mounting supports for the sheetrocked bottom of the space. The supports for the sheetrocked bottom must be mounted on the surface of the walls of the space and have sheetrock between the support and the wall framing.

Any horizontal seam in the wall-mounted sheetrock must be a minimum of ½ inch below the lower surface of the sheetrocked bottom. Also any horizontal seam in the wall of the space above the sheetrocked bottom must be a minimum of 1½ inches above the top of the mounting wood or metal brackets. This spacing is required to allow adequate room for taping the seam. All vertical sheetrock seams must be taped and sealed with joint compound or equivalent prior to the installation of the wood or metal brackets that support the dropped ceiling.

All penetrations of this space, for example refrigerant lines, water lines for hydronic heating, electrical (line and low voltage) lines, sprinkler lines, and ducts must be sealed with fire caulk or other approved sealing material as required by the building official.

Ductwork that penetrates the sheetrock must use a collar that goes entirely through the wall cavity. These collars must extend at least two inches past the sheetrock on each side of the wall cavity. The collars must then be sealed to the sheetrock on each side of the wall. The ducts must be attached and sealed to the collar.

2. The other way to demonstrate there is no air leakage pathway that is more connected to the outside than to the inside is to test the leakage of the sheetrocked space as though it were a duct. For this test, the space is sealed off and tested with duct pressurization equipment at a pressure of 25 Pa. If the tested leakage from this space is 10 cubic feet per minute or less, then the space may be considered to have no substantial leakage to outside the conditioned space (effectively zero within the instrumentation accuracy). The results of this test must be reported to the building official. See the following three figures.

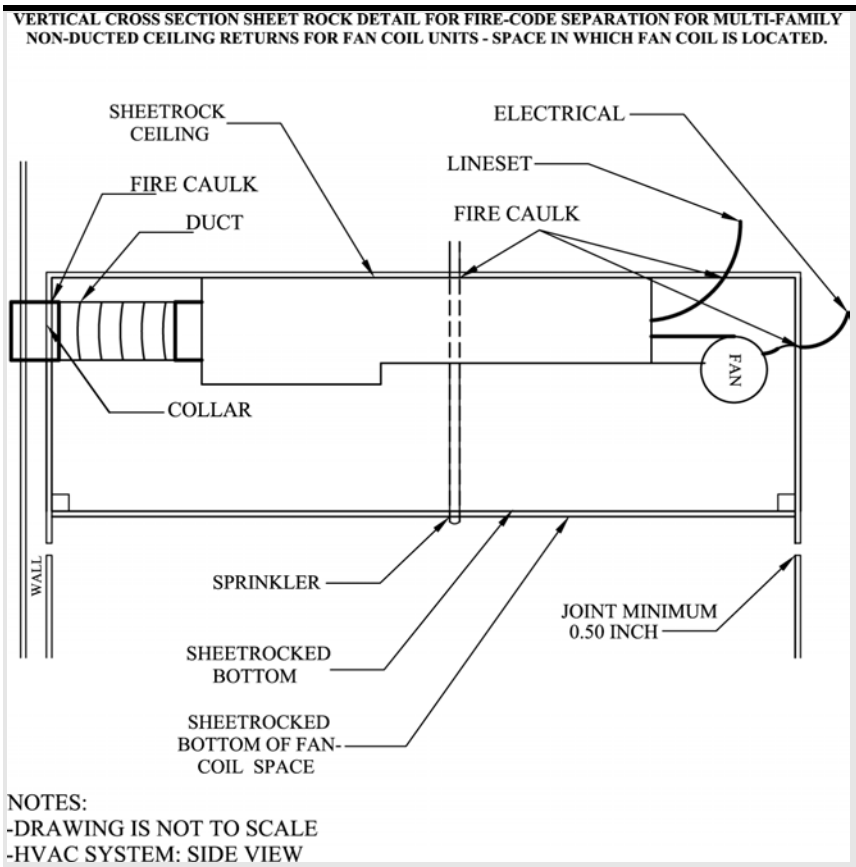

Figure 1 *Example of non-ducted ceiling returns for fan coil to meet fire code*

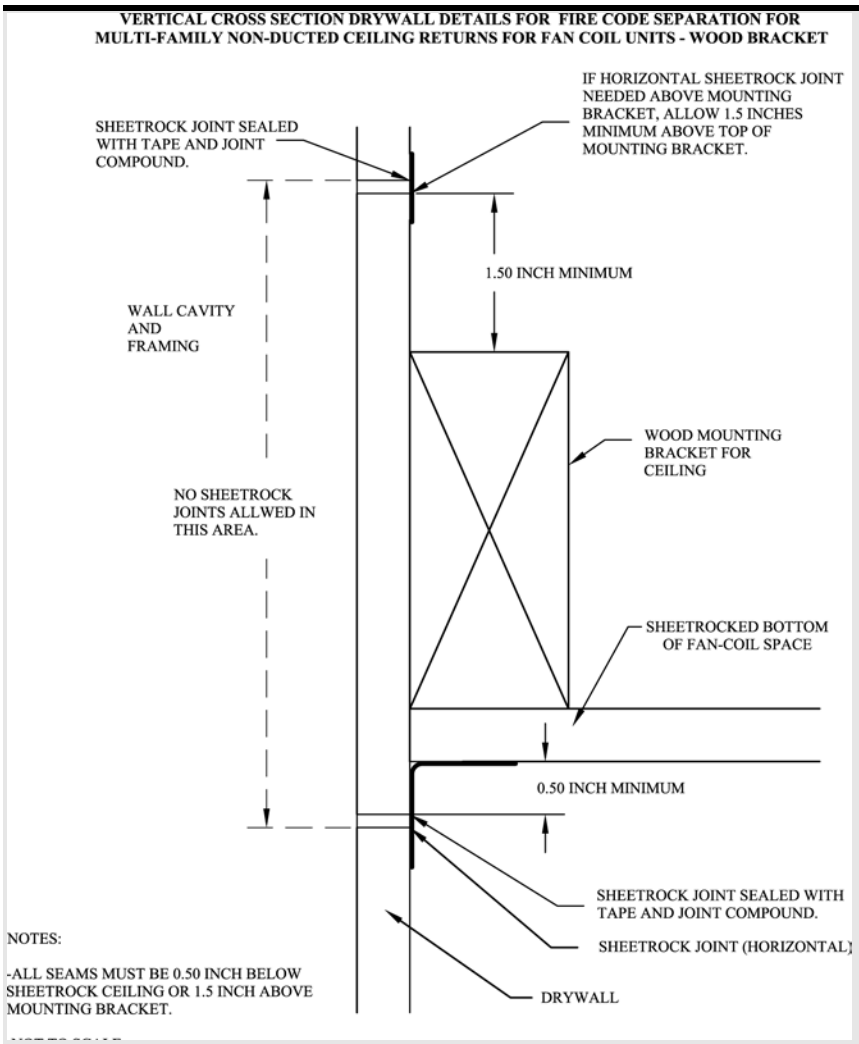

Figure 2 *Example of wood bracket support to meet fire code separation*

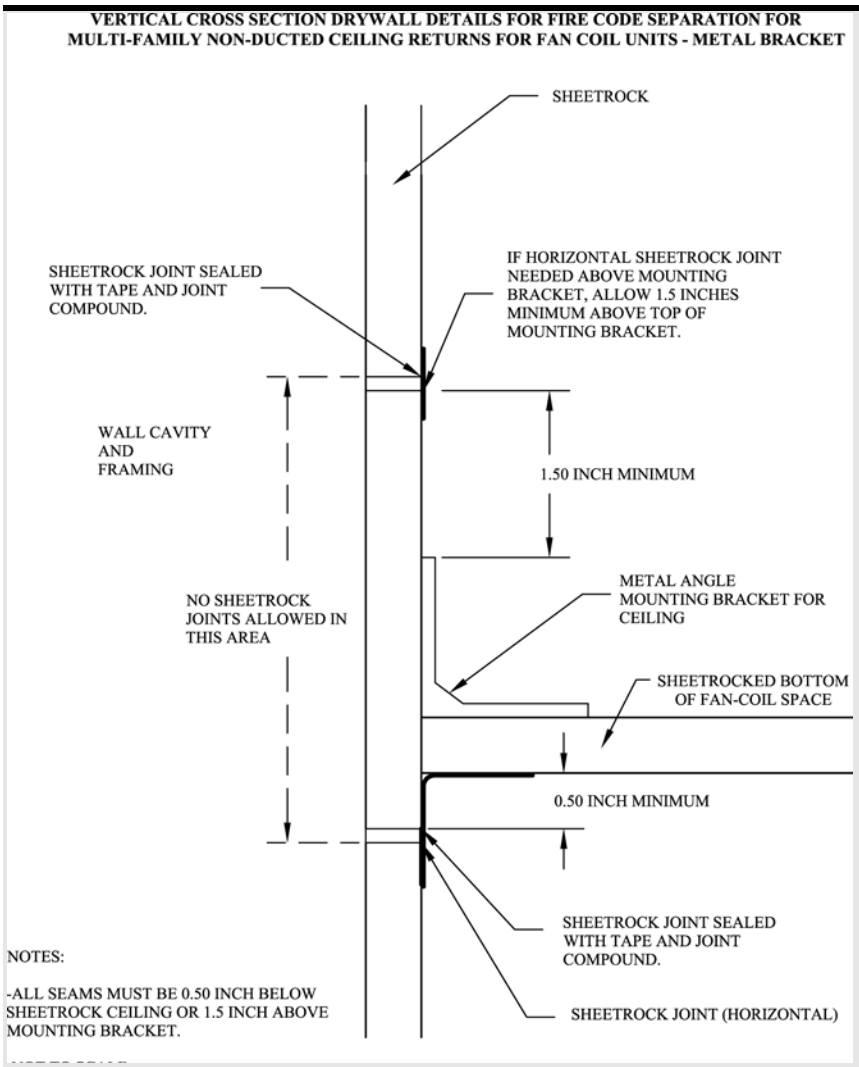

Figure 3 *Example of metal bracket support to meet fire code separation*

Ducts and fans integral to a wood heater or fireplace are exempt from these insulation and installation requirements.

§150(m)2D

§150(m)3D

Duct systems may not use cloth-back, rubber-adhesive duct tape unless it is installed in combination with mastic and drawbands. The enforcement of these minimum standards is the responsibility of the building official.

Product Markings

§150(m)6

Insulated flexible duct products installed to meet this requirement must include labels, in maximum intervals of three feet, showing the R-value for the duct insulation (excluding air films, vapor barriers, or other duct components), based on the tests and thickness specified in §150(m).

Dampers to Prevent Air Leakage

§150(m)7

Fan systems that exhaust air from the building to the outside must be provided with back draft or automatic dampers.

§150(m)8

Gravity ventilating systems must have an automatic or readily accessible, manually-operated damper in all openings to the outside, except combustion inlet and outlet air openings and elevator shaft vents. This includes clothes dryer exhaust vents when installed in conditioned space.

Protection of Insulation

§150(m)9

Insulation must be protected from damage, including that due to sunlight, moisture, equipment maintenance, and wind but not limited to the following: Insulation exposed to weather must be suitable for outdoor service e.g., protected by aluminum, sheet metal, painted canvas, or plastic cover. Cellular foam insulation shall be protected as above or painted with a coating that is water retardant and provides shielding from solar radiation that can cause degradation of the material.

Ducts in Concrete Slab

Ducts located in a concrete slab must have R-4.2 insulation, but other issues will come into play. If ducts are located in the soil beneath the slab or embedded in the slab, the insulation material should be designed and rated for such installation. Insulation installed in below-grade applications should resist moisture penetration (closed cell foam is one moisture-resistant product). Common pre-manufactured duct systems are not suitable for below-grade installations. If concrete is to be poured directly over the ducts, then the duct construction and insulation system should be sturdy enough to resist the pressure and not collapse. Insulation should be of a type that will not compress, or it should be located inside a rigid duct enclosure. The only time that common flex ducts are suitable in a below-grade application is when a channel is provided in the slab.

4.4.2 Prescriptive Requirements

Duct Insulation

§151(f)10

For Package C, the duct insulation requirement is R-8 in all climate zones. For Package D, the requirement varies between R-4.2 and R-8.0 depending on climate zone. See standards Table 151-C (reproduced in Appendix B of this document) for details.

Duct Leakage

§151(f)10

Duct sealing, including field verification and diagnostic testing, is required in all climate zones in both prescriptive packages C and D. The details of the testing methods are covered in Appendix RC in the *Residential ACM Manual*. The bottom line requirement for new duct systems is that leakage is less than 6% of the supply air flow. (Note that the requirement is slightly less stringent for testing of existing duct systems as described in Chapter 8, Additions and Alterations.)

To comply with the duct sealing requirement, the installer must first perform the tests and document the results in the appropriate portion of the CF-6R form. In addition, a HERS rater must provide independent diagnostic testing and verification and then record the findings on the CF-4R form.

There are two alternatives to the duct testing requirement. The first is to meet the alternative Package D requirements that are listed in the notes that follow Table 151-C in the Standards (or Appendix B of this document). These alternative packages contain more stringent window and HVAC efficiency requirements as a tradeoff for not performing duct testing. For example, in climate zones 10, 11, and 12, the alternative package sets the maximum window U-factor at 0.38 (vs. 0.57), the maximum SHGC at 0.31 (vs. 0.40), and the minimum SEER at 13.0 (vs. mandatory minimums that vary by type and size).

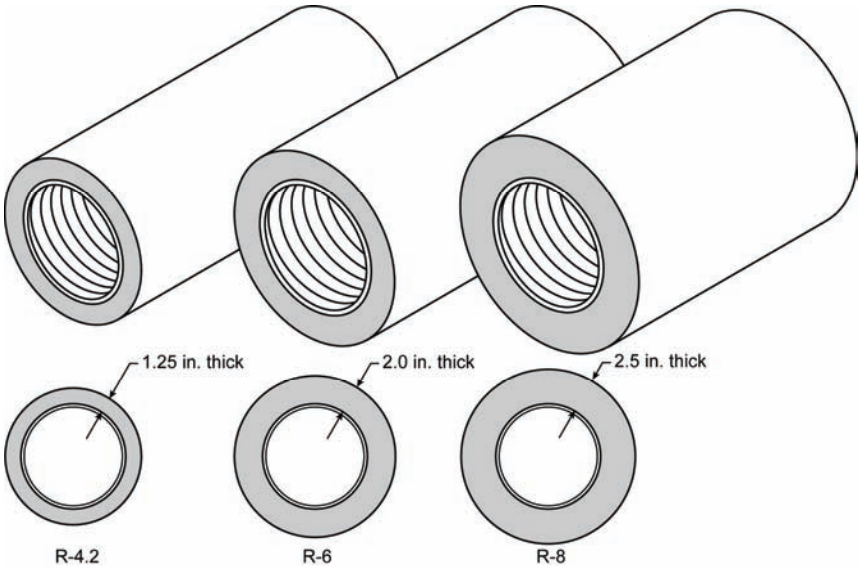

Figure 4-4 – R-4.2, R-6, and R-8 Ducts

The second alternative to duct testing is to use the performance compliance method. In this case, the computer program will automatically assume that the standard design (baseline) has been tested and sealed, while the proposed design will default to a higher leakage value.

4.4.3 Compliance Options

The Standards provide credit for several compliance options related to duct design and construction. These options are described below along with some general duct construction guidelines.

Supply Duct Location

There are three ways to achieve credit for favorable duct location when using the performance compliance method.

First, credit is available if no more than 12 linear feet of supply duct are outside conditioned space. This total must include the air handler and plenum length. This credit results in a reduction of duct surface area in the computer compliance programs. This option requires field verification by a HERS rater.

The second alternative applies when 100% of the supply ducts are located in either the crawlspace or the basement rather than in the attic. To achieve this credit, a duct layout must be included in the plans showing that all supply registers are located in the floor (or at least no more than 2 feet above the floor). This option does not require field verification by a HERS rater.

Third, credit for a good design is available through the *Diagnostic Supply Duct Location, Surface Area, and R-value* compliance option, which is described below. This option requires field verification by a HERS rater.

Note that there is no compliance credit provided for choosing a heating system such as a wall furnace, floor heater, or room heater even though those systems typically have no ducts. For these cases, the standard design in the compliance calculation uses the same type of system and also has no ducts. However, other systems, such as hydronic heating systems with a central heater or boiler and multiple terminal units, are considered central HVAC systems that are compared to a ducted system in the *Standard Design*. If the hydronic system has no ducts, there may be a significant energy credit through the performance method.

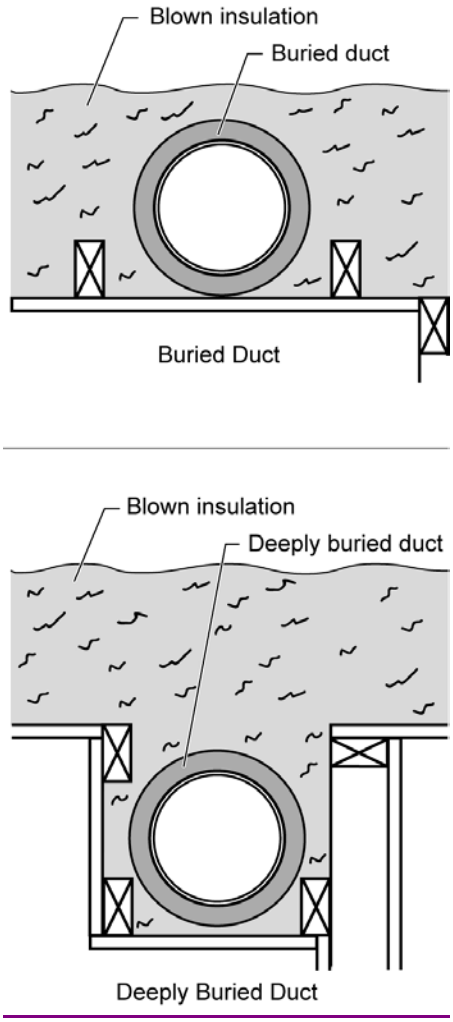

Figure 4-5 – Example: Buried Ducts on Ceiling and Deeply Buried Ducts

Duct Insulation

Performance credit is also available if all of the ducts are insulated to a level higher than required by the prescriptive package. If ducts with multiple R-values are installed, the lowest duct R-value must be used for the entire duct system. However, the air handler, plenum, connectors, and boots can be insulated to the mandatory minimum R-value.

As an alternative when there is a mix of duct insulation R-values, credit is available through the method described in the next section.

Diagnostic Supply Duct Location, Surface Area, and R-value

This compliance option allows the designer to take credit for good duct design, including designs that do not meet the criteria for the duct location and/or insulation compliance options described above. This method requires that the designer enter characteristics of all supply ducts that are not located within conditioned space. The information required includes the length, diameter,

insulation R-value, and location of all supply ducts. This method will result in a credit if the proposed duct system is better than the standard design, which exactly meets the prescriptive insulation requirement and has supply duct surface area set at 27% of floor area.

In order to claim this credit, the duct system design must be documented on the plans, and the installation must be certified by the installer on the CF-6R form and verified by a HERS rater on the CF-4R form. Details of this compliance option are described in Chapter 4 of the *Residential ACM Manual,* and verification procedures are described in Appendix RC of the same document.

This compliance option also allows credit for the special case of ducts that are buried by blown attic insulation. For ducts that lie on the ceiling (or within 3.5 in. of the ceiling), the effective R-value depends on the duct size and the depth of ceiling insulation. This case is referred to as *Buried Ducts on the Ceiling.* For the case of *Deeply Buried Ducts,* which are ducts that are enclosed in a lowered portion of the ceiling and completely covered by attic insulation, then the effective R-value is simply R-25 where the attic insulation is fiberglass and R-31 for cellulose attic insulation. In order to take credit for buried ducts, the system must have been diagnostically tested according to Appendix RC in the *Residential ACM Manual* and meet the requirements for high insulation installation quality in Appendix RH.

Ducts in Attics with Radiant Barriers

Installation of a radiant barrier in the attic increases the duct efficiency by lowering attic summer temperatures. Compliance credit for radiant barriers requires listing of the radiant barrier in the *Special Features and Modeling Assumptions* to aid the local enforcement agency's inspections. Compliance credit for a radiant barrier does not require HERS rater verification.

Duct Installation Standards

The mandatory duct construction measures referenced earlier state that duct installations must comply with California Mechanical Code Sections 601, 602, 603, 604, 605, and Standard 6-5, as well as the requirements of Title 24. Some of the highlights of these requirements are listed in this section along with some guidance on good construction practice.

Tapes and Clamps

- All tapes and clamps must meet the requirements of Section 150 (m) of the Standards.
- Cloth-back rubber-adhesive tapes must be used only in combination with mastic.

All joints must be mechanically fastened

- For residential round metal ducts, installers must overlap the joint by at least 1½ in. and use three sheet metal screws equally spaced around the joint (see Figure 4-6).

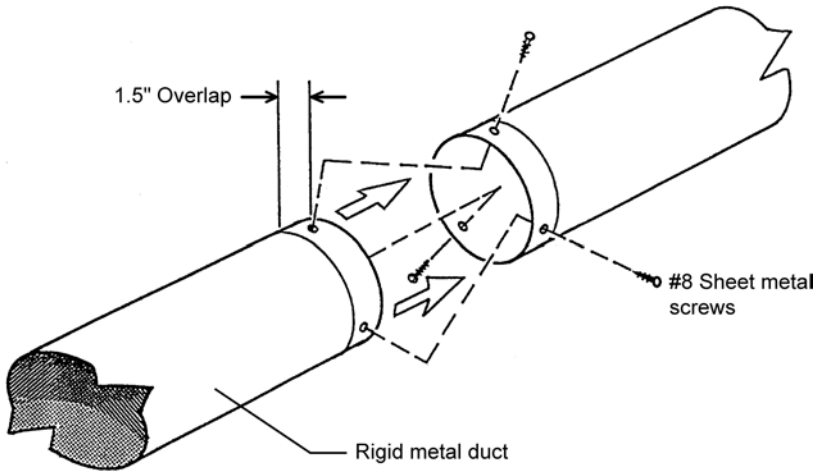

Source: Richard Heath & Associates/Pacific Gas & Electric

Figure 4-6 – Connecting Round Metallic Ducts

- For round non-metallic flex ducts, installers must insert the core over the metal collar or fitting by at least 1 in. This connection may be completed with either mesh, mastic and a clamp, or two wraps of tape and a clamp.

For the mesh and mastic connection, the installer must first tighten the clamp over the overlapping section of the core, apply a coat of mastic covering both the metal collar and the core by at least 1 in., then firmly press the fiber mesh into the mastic and cover with a second coat of mastic over the fiber mesh (see Figure 4-7).

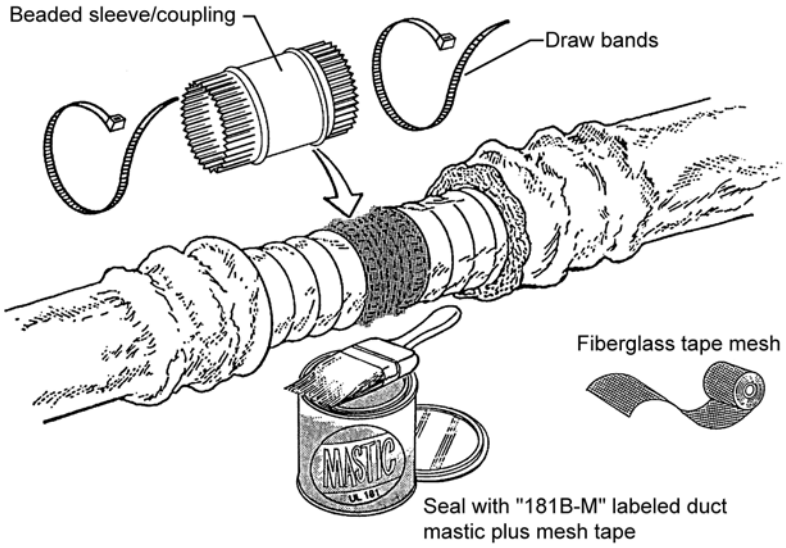

Source: Richard Heath & Associates/Pacific Gas & Electric

Figure 4-7 – Connecting Flex Ducts Using Mastic and Mesh

For the tape connection first apply at least two wraps of tape covering both the core and the metal collar by at least 1 in., then tighten the clamp over the overlapping section of the core (see Figure 4-8).

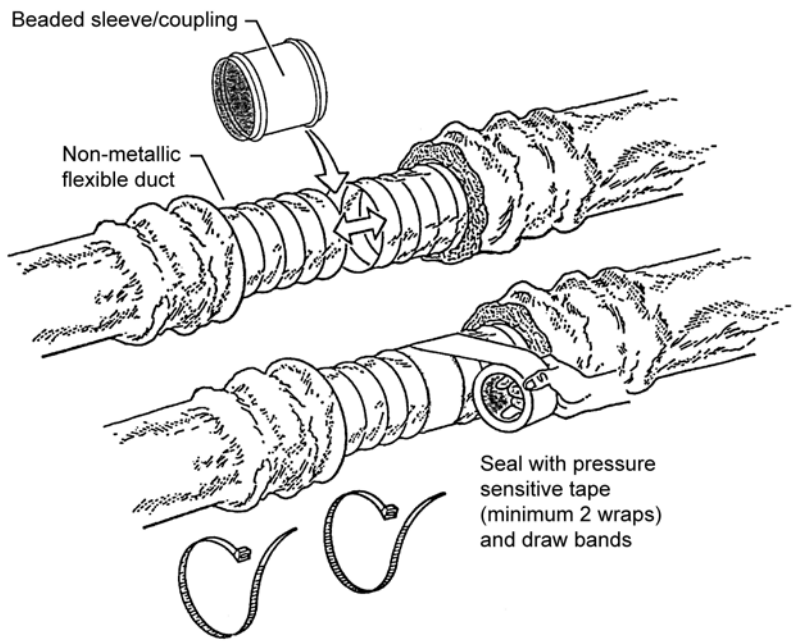

Source: Richard Heath & Associates/Pacific Gas & Electric

Figure 4-8 –Connecting Flex Ducts Using Tape and Clamps

All joints must be made airtight in accordance to §150 (m)

- Seal with mastic, tape, aerosol sealant, or other duct-closure system that meets the applicable requirements of UL 181, UL 181A, UL 181B, or UL 723. Duct systems shall not use cloth-back, rubber-adhesive duct tape regardless of UL designation, unless it is installed in combination with mastic and clamps. The Energy Commission has approved a cloth-back duct tape with a special butyl adhesive manufactured by Tyco and sold as
  Polyken 558CA or Nashua 558CA. This tape passed Lawrence Berkeley Laboratory tests comparable to those that cloth-back rubber-adhesive duct tapes failed. The Tyco tape is allowed to be used to seal flex duct to fittings without being in combination with mastic. This tape cannot be used to seal other duct system joints, such as the attachment of fittings to plenums and junction boxes.
  It has on its backing the phrase "CEC approved," a drawing of a fitting to plenum joint in a red circle with a slash through it (the international symbol of prohibition), and a statement that it can not be used to seal fitting to plenum and junction box joints.
- Mastic and mesh should be used where round or oval ducts join flat or round plenums (see Figure 4-9).

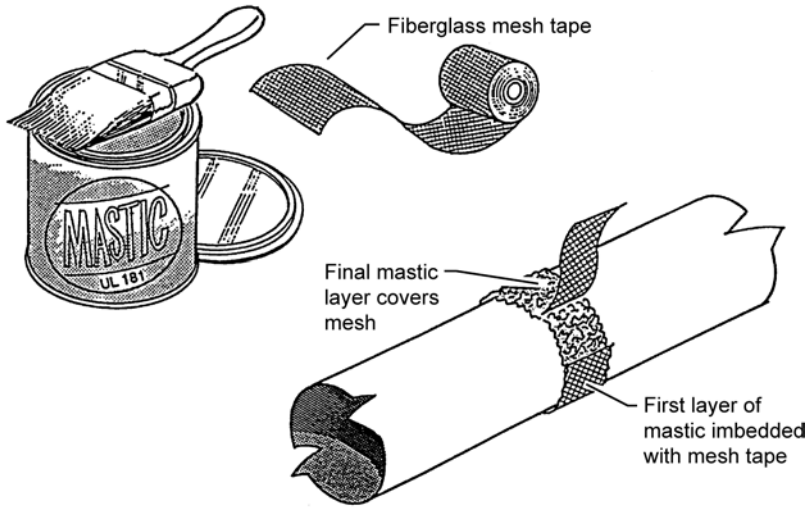

Source: Richard Heath & Associates/Pacific Gas & Electric

Figure 4-9 – Sealing Metallic Ducts with Mastic and Mesh

All ducts must be adequately supported

- Both rigid duct and flex duct may be supported on rigid building materials between ceiling joists or on ceiling joists.
- For rigid round metal ducts that are suspended from above, hangers must occur 12 ft apart or less (see Figure 4-10).

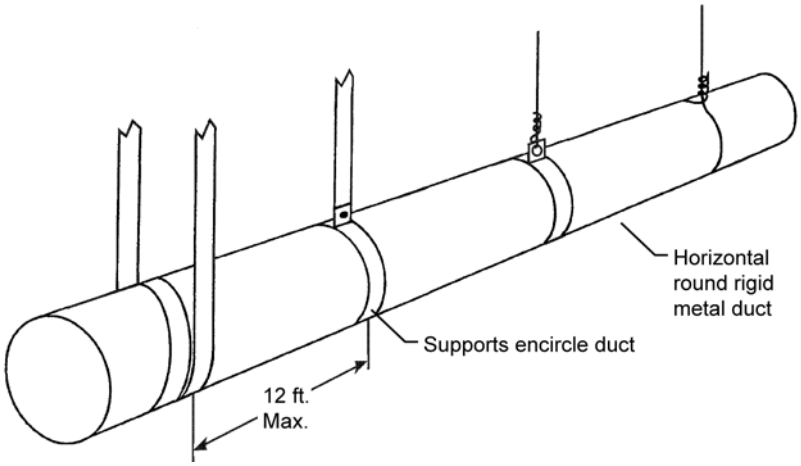

Source: Richard Heath & Associates/Pacific Gas & Electric

Figure 4-10 – Options for Suspending Rigid Round Metal Ducts

- For rectangular metal ducts that are suspended from above, hangers must occur at a minimum of 4 ft to 10 ft depending on the size of the ducts (see Table 6-2-A in the California Mechanical Code). Refer to Figure 4-11.

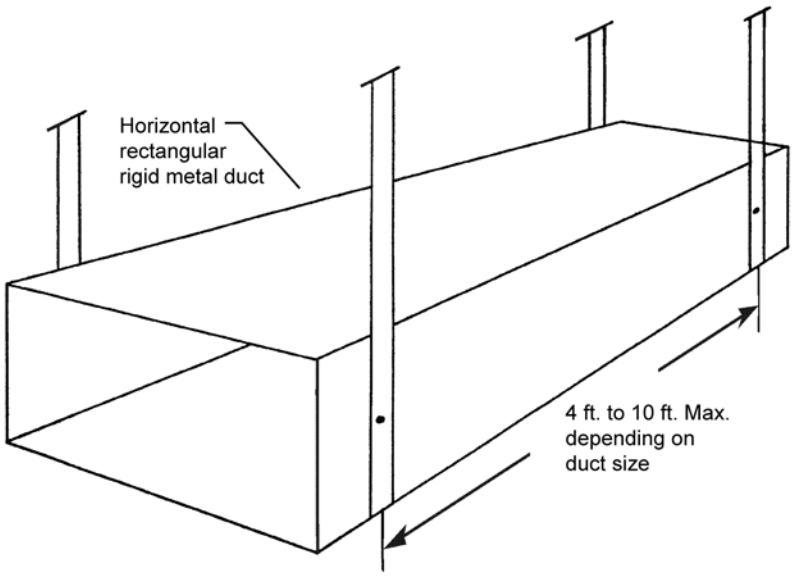

Source: Richard Heath & Associates/Pacific Gas & Electric

Figure 4-11 – Options for Suspending Rectangular Metal Ducts

- For flex ducts that are suspended from above, hangers must occur at 4 ft apart or less and all fittings and accessories must be supported separately by hangers (see Figure 4-12).

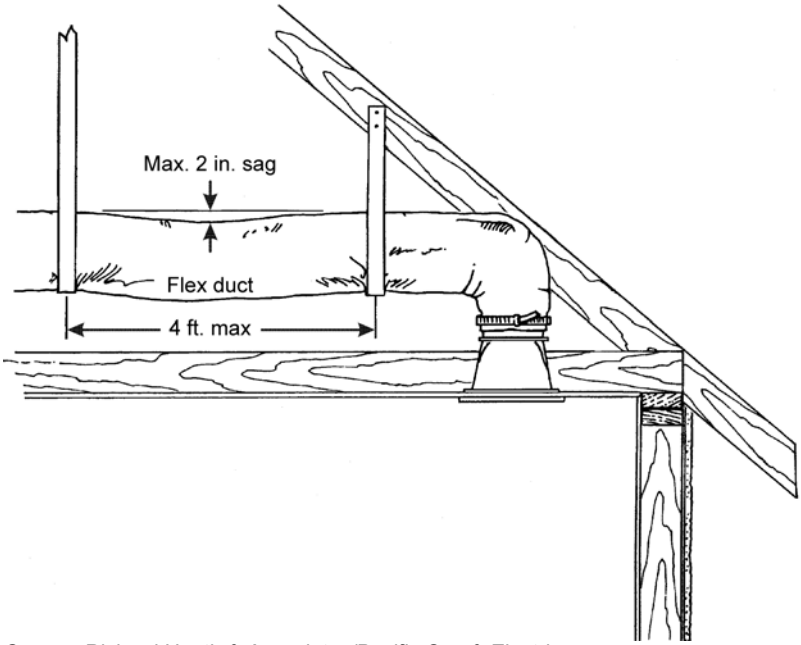

Source: Richard Heath & Associates/Pacific Gas & Electric

Figure 4-12 – Minimum Spacing for Suspended Flex Ducts

- For vertical runs of flex duct, support must occur at 6 ft intervals or less (see Figure 4-13).

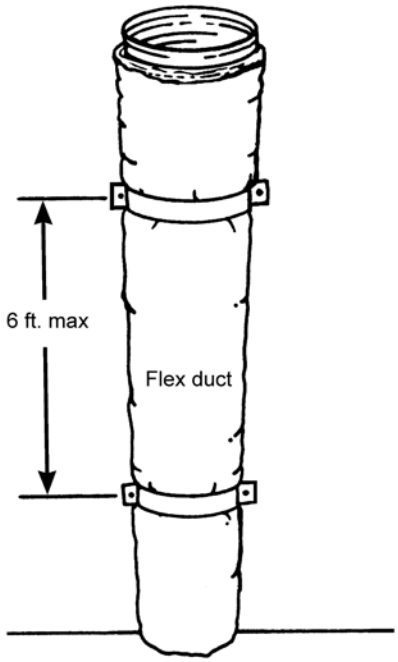

Source: Richard Heath & Associates/Pacific Gas & Electric

Figure 4-13 – Minimum Spacing for Supporting Vertical Flex Ducts

The routing and length of all duct systems can have serious impacts on system performance due to possible increased air flow resistance. The Energy Commission recommends using the minimum length of duct to make connections and the minimum possible number of turns.

For flexible duct, the Energy Commission recommends fully extending the duct by pulling the duct tight and cutting off any excess duct and avoiding bending ducts across sharp corners or compressing them to fit between framing members (see Figure 4-14). Also avoid incidental contact with metal fixtures, pipes, or conduits or installation of the duct near hot equipment such as furnaces, boilers, or steam pipes that are above the recommended flexible duct use temperature.

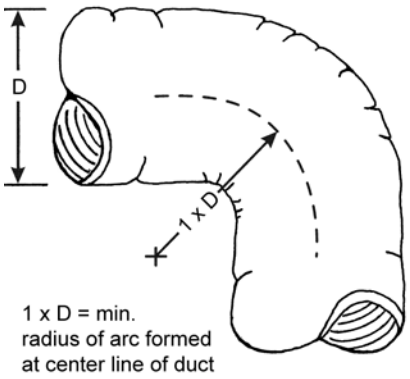

Source: Richard Heath & Associates/Pacific Gas & Electric

Figure 4-14 – Minimizing Radius for Flex Duct Bends

All joints between two sections of duct must be mechanically fastened and substantially airtight. For flex duct this must consist of a metal sleeve no less than 4 in. in length between the two sections of flex duct.

All joints must be properly insulated. For flex ducts this must consist of pulling the insulation and jacket back over the joint and using a clamp or two wraps of tape.

Aerosol sealant injection systems are an alternative that typically combines duct testing and duct sealing in one process. Figure 4-15 shows the computer-controlled injection fan temporarily connected to the supply duct. The plenum is blocked off by sheet metal to prevent sealant from entering the furnace. Supply air registers are also blocked temporarily to keep the sealant out of the house. Note that ducts must still be mechanically fastened even if an aerosol sealant system is used.

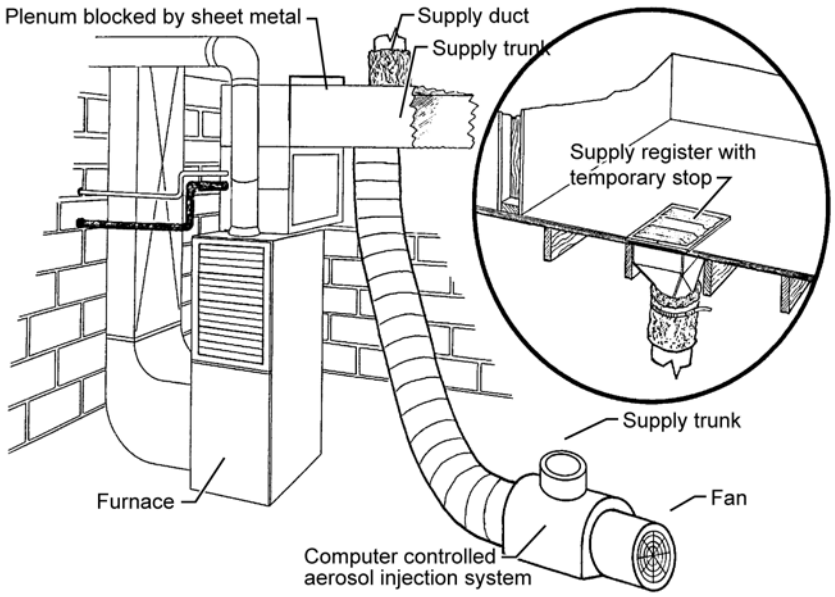

Source: Richard Heath & Associates/Pacific Gas & Electric

Figure 4-15 – Computer-Controlled Aerosol Injection System

4.5 Controls

4.5.1 Setback Thermostats

Automatic setback thermostats can add both comfort and convenience to a home. Occupants can wake up to a warm house in the winter and come home to a cool house in the summer without using unnecessary energy.

§151(f) 9

A setback thermostat is always required for central systems whether the prescriptive or performance compliance method is used. An exception is allowed only if: (1) the building complied using a computer performance approach with a

non-setback thermostat; and (2) the system is one of the following non-central types:

- Non-central electric heaters
- Room air conditioners
- Room air conditioner heat pumps
- Gravity gas wall heaters
- Gravity floor heaters
- Gravity room heaters
- Room air conditioners.

When it is required, the setback thermostat must have a clock or other mechanism that allows the building occupant to schedule the heating and/or cooling setpoint temperature over a 24-hour period. The setback thermostat must be designed so that the building occupant can program different temperature settings for at least two different time periods each day, for example, 68°F during morning hours, 60°F during the day, 68°F during evening hours, and 60°F at night.

If more than one piece of heating equipment is installed in a residence or dwelling unit, the set-back requirement may be met either by controlling all heating units by one setback thermostat or by controlling each unit with a separate setback thermostat. Separate heating units may be provided with a separate on/off control capable of overriding the setback thermostat.

Wood stoves do not need a setback thermostat

112(b)

Note that setback thermostats for heat pumps must be “smart thermostats” that minimize the use of supplementary electric resistance heating during startup and recovery from setback, as discussed earlier in the Heating Equipment section.

Example 4-2

Question

Am I exempt from the requirement for a setback thermostat if I have a gravity wall heater or any of the equipment types listed in the exception to §150(i)?

Answer

Exemption from the requirement depends on the compliance approach you are using. The exception requires that “the resulting increase in energy use due to the elimination of the setback thermostat shall be factored into the compliance analysis.” The only compliance approach that models this condition is the computer performance approach. To be exempt from the setback thermostat requirement, the building/space must be modeled with “non-setback.” Any time the alternative component packages are used for compliance, a setback thermostat is required, regardless of the type of heating/cooling system (except wood stoves).

4.5.2 Zonal Control

An energy compliance credit is provided for zoned heating and air-conditioning systems, which save energy by providing selective conditioning for only those areas of a house that are occupied. A house having at least two zones (living and sleeping) may qualify for this compliance credit. The equipment may consist of one air-conditioning system for the living areas and another system for sleeping areas or a single system with zoning capabilities, set to turn off the sleeping areas in the daytime and the living area unit at night. (See Figure 4-16).

There are unique eligibility and installation requirements for zonal control to qualify under the Standards. The following steps must be taken for the building to show compliance with the Standards under this exceptional method:

- Temperature Sensors. Each thermal zone, including a living zone and a sleeping zone, must have individual air temperature sensors that provide accurate temperature readings of the typical condition in that zone.
- Habitable Rooms. Each habitable room in each zone must have a source of space heating and/or cooling (if zonal credit for cooling is desired) such as forced air supply registers or individual conditioning units. Bathrooms, laundry, halls and/or dressing rooms are not habitable rooms.
- Noncloseable Openings. The total noncloseable opening area between adjacent living and sleeping thermal zones (i.e., halls, stairwells, and other openings) must be less than or equal to 40 ft^2. All remaining zonal boundary areas must be separated by permanent floor-to-ceiling walls and/or fully solid operable doors capable of restricting free air movement when in the closed position.

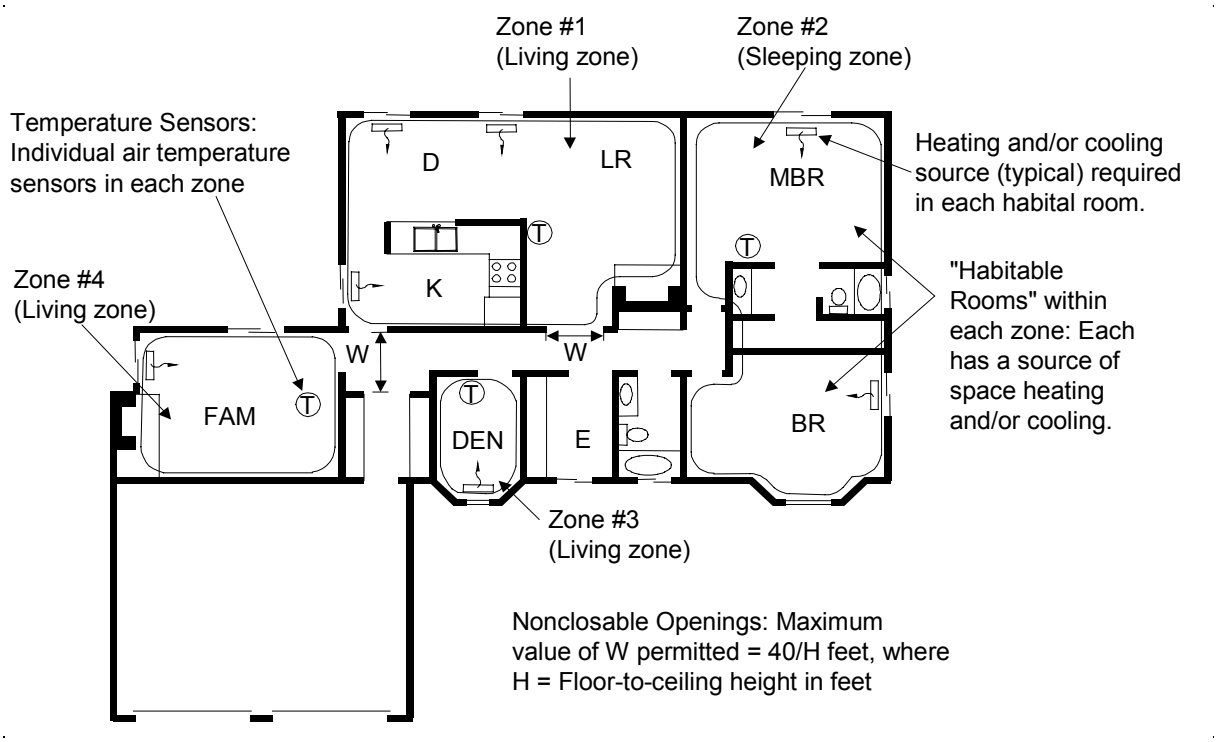

Figure 4-16 – Zonal Control Example

- *Setback Thermostats*. Each zone must be controlled by a central automatic dual setback thermostat that can control the conditioning equipment and maintain preset temperatures for varying time periods in each zone independent of the other.

Other requirements specific to forced air ducted systems include the following:

- Each zone must be served by a return air register located entirely within the zone. Return air dampers are not required.
- Supply air dampers must be manufactured and installed so that when they are closed, there is no measurable airflow at the registers.
- The system must be designed to operate within the equipment manufacturer's specifications.
- Air is to positively flow into, through, and out of a zone only when the zone is being conditioned. No measurable amount of supply air is to be discharged into unconditioned or unoccupied space in order to maintain proper air flows in the system.
- Systems that allow supply air to be by-passed to the return-air system shall be protected against short cycling and excessive temperatures of the space-conditioning equipment, and include necessary controls for efficient, safe and quiet operation.

Although multiple thermally distinct living and/or sleeping zones may exist in a residence, the correct way to model zonal control for credit requires only two

zones: one living zone and one sleeping zone. All separate living zone components must be modeled as one single living zone, and the same must be done for sleeping zones. See also Appendix RD in the *Residential ACM Manual* for modeling details.

Example 4-3

Question

In defining the living and sleeping zones for a home with a zonally controlled HVAC system, can laundry rooms and bathrooms (which are not habitable spaces) be included on whichever zone they are most suited to geographically (e.g., a bathroom located near bedrooms)?

Answer

Yes. For computer modeling, include the square footage of any nonhabitable, or indirectly conditioned spaces, with the closest zone.

Example 4-4

Question

I have two HVAC systems and want to take zonal control credit. Can the return air grilles for both zones be located next to each other in the 5 ft wide by 9 ft high hallway (in the same zone)?

Answer

No. Because of the need to prevent mixing of air between the conditioned zone and the unconditioned zone, it is necessary to (1) have the return air for each zone within that zone, and (2) limit any non-closeable openings between the two zones to 40 ft² or less. Unless these criteria and the other criteria listed in this chapter can be met, credit for a zonally controlled system cannot be taken.

4.6 Alternative Systems

4.6.1 Hydronic Heating Systems

Hydronic heating is the use of hot water to distribute heat. Hydronic heating is discussed in this compliance manual as an “Alternative System” because it is much less common in California than in other parts of the United States.

A hydronic heating system consists of a heat source, which is either a boiler or water heater, and a distribution system. There are three main types of hydronic distribution systems, and they may be used individually or in combination: baseboard or valence convectors, hot water air handlers, and radiant panel heating systems. These three options are illustrated in Figure 4-17.

- Baseboard/valence convectors are finned tubes that run along the base or top of walls. A metal enclosure conceals the finned tubes. Convectors do not require ducting.
- Air handlers consist of a blower and finned tube coil enclosed in a sheet metal box (similar to a typical residential furnace), and

may be ducted or non-ducted. Air handlers may also include refrigerant coils for air conditioning.

- Radiant panels may be mounted on or integrated with floors, walls, and ceilings. Radiant floor panels are most typical. See the separate section below for additional requirements specific to radiant floor designs.

Mandatory Requirements

For hydronic heating systems without ducts, the mandatory measures cover only pipe insulation, tank insulation, and boiler efficiency. Otherwise, for fan coils with ducted air distribution, the mandatory air distribution measures also apply as described earlier in this document. And for combined hydronic systems, as described below, mandatory water heating requirements also apply to the water heating portion of the system.

§150(j) Water System Pipe and Tank Insulation and Cooling Systems Line Insulation

The typical residential hydronic heating system operating at less than 200° F must have at least 1 in. of nominal R-4 insulation on pipes up to 2 in. in diameter and 1.5 in. of insulation on larger pipes. For other temperatures and pipe insulation characteristics see Tables 150-A and 150-B in the Standards.

There are a few exceptions where insulation is not required: sections of pipes where they penetrate framing members; pipes that provide the heat exchange surface for radiant floor heating; piping in the attic that is covered by at least 4 inches of blown insulation; and piping installed within walls if all the requirements for Insulation Installation Quality are met (see the envelope chapter).

If the system includes an unfired hot water storage tank, then the tank must be either wrapped with R-12 insulation or insulated internally to at least R-16.

§123 Requirements for Pipe Insulation

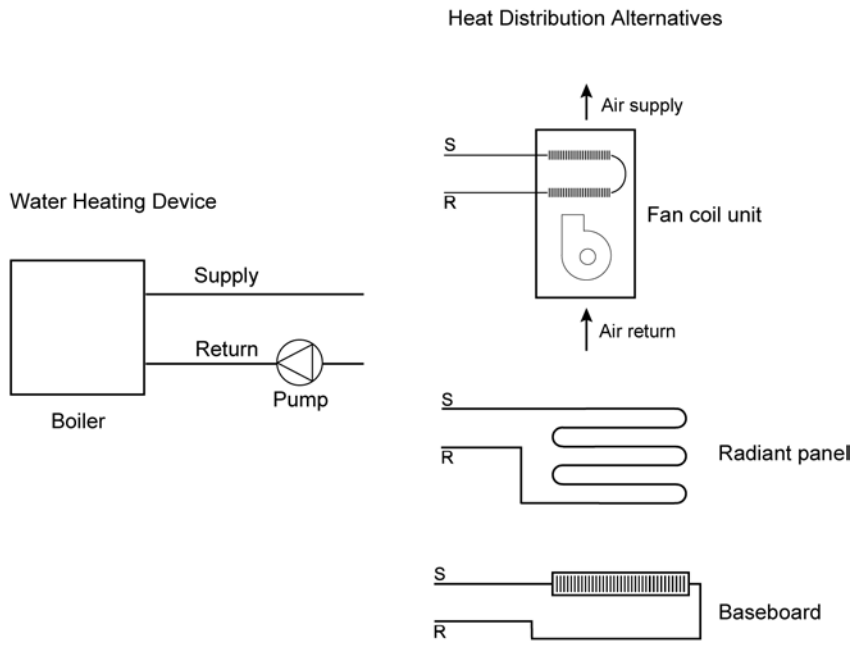

Figure 4-17 – Hydronic Heating System Components

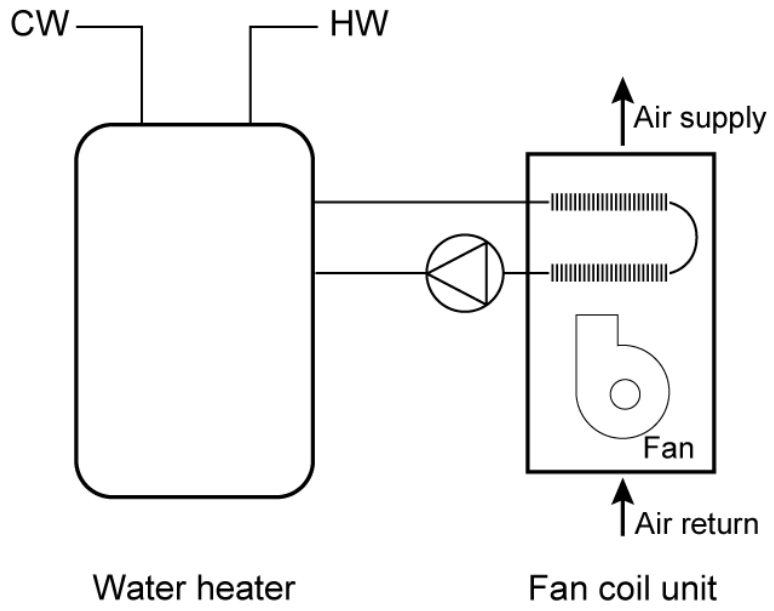

Figure 4-18– Combined
Hydronic System with Water Heater as Heat Source

For pipes in hydronic heating systems that operate at pressure greater than 15 psi, the requirements of §123 apply. These are the same requirements that apply to nonresidential piping systems.

Appliance Efficiency Regulations, Title 20

Gas or oil boilers of the size typically used for residential space heating (less than 300,000 Btu/h capacity) must be rated with an AFUE of 80% or greater. A gas or oil water heater may also be used as a dedicated source for space heating. Other hot water sources, including heat pumps or electric resistance water heaters, are not allowed for use in dedicated space heating systems. Therefore, some water heaters may be used for space heating only if used as part of a combined hydronic system as described below. In that case, the mandatory water heater requirements apply.

Thermostat requirements also apply to hydronic systems as described in an earlier section.

Prescriptive Requirements

There are no specific prescriptive requirements that apply to hydronic systems. However, if the system has a fan coil with ducted air distribution, the relevant prescriptive requirements apply, including duct insulation and duct sealing.

Compliance Options

Credit for choosing a hydronic heating system is possible using the performance compliance method. The standard design is assumed to have a furnace and ducted air distribution system. Therefore, hydronic systems without ducts can take credit for avoiding duct leakage penalties. In addition, minimizing the amount of pipe outside of conditioned space will provide some savings. Hydronic heating compliance calculations are described in the Residential ACM Manual, Section 6.2.

If the proposed hydronic system includes ducted air distribution, then the associated compliance options described earlier in this chapter may apply, such as adequate airflow (if there is air conditioning) and supply duct location.

A “combined hydronic” system is another compliance option that is possible when using the performance method. Combined hydronic heating refers to the use of a single water heating device as the heat source for both space and domestic hot water heating.

There are two types of combined hydronic systems. One uses a boiler as a heat source for the hydronic space heating system. The boiler also heats domestic water by circulating hot water through a heat exchanger in an indirect-fired water heater.

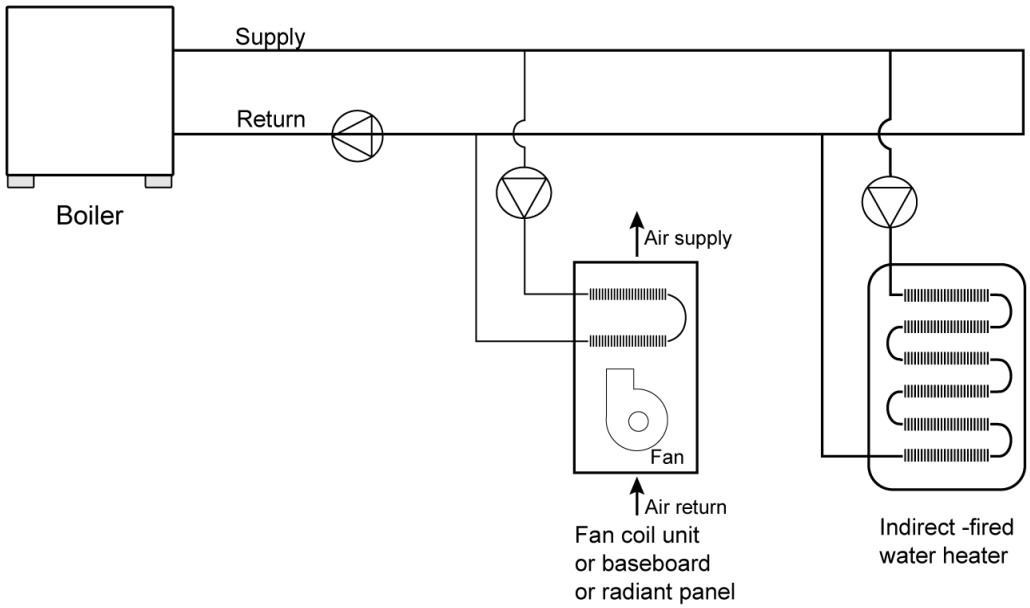

Figure 4-19 – Combined Hydronic System with Boiler and Indirect Fired Water Heater

The other type uses a water heater as a heat source. The water heater provides domestic hot water as usual. Space heating is accomplished by circulating water from the water heater through the space heating delivery system. Sometimes a heat exchanger is used to isolate potable water from the water circulated through the delivery system. Some water heaters have built-in heat exchangers for this purpose.

For compliance calculations, the water heating function of a combined hydronic system is analyzed for its water heating performance as if the space heating function were separate. For the space heating function, an “effective” AFUE or HSPF rating is calculated. These calculations are performed automatically by the compliance software (see the compliance program vendor’s supplement).

4.6.2 Radiant Floor System

One type of distribution system is the radiant floor system, either hydronic or electric, which must meet mandatory insulation measures (see below). Radiant floors may take one of several forms. Tubing or electric elements for radiant floor systems may be

- embedded in a concrete floor slab,
- installed over the top of a wood sub-floor and covered with a concrete topping,
- installed over the top of wood sub-floor in between wood furring strips, or
- installed on the underside surface of wood sub-floor.

In the latter two types of installations aluminum fins are typically installed to spread the heat evenly over the floor surface, and to reduce the temperature of

the water required. All hydronic systems use one or more pumps to circulate hot water. Pumps are controlled directly or indirectly by thermostats, or by special outdoor reset controls.

Mandatory Insulation Measures

§118(g) Insulation Requirements for Heated Slab Floors

Table 118-B Slab Insulation Requirements for Heated Slab-On-Grade Floors

Table 4-8 – Slab Insulation Requirements for Heated Slabs

Location of Insulation	Orientation of Insulation	Installation Criteria	Climate Zone	Insulation R-value
Outside edge of heated slab, either inside or outside the foundation wall	Vertical	From the level of the top of the slab, down 16 in. or to the frost line, whichever is greater. Insulation may stop at the top of the footing where this is less than the required depth. For below-grade slabs, vertical insulation shall be extended from the top of the foundation wall to the bottom of the foundation (or the top of the footing) or frost line whichever is greater.	1-15	5
			16	10
Between heated slab and outside foundation wall	Vertical and Horizontal	Vertical insulation from the top of the slab at the inside edge of the outside wall down to the top of the horizontal insulation. Horizontal insulation from the outside edge of the vertical insulation extending 4 ft toward the center of the slab in a direction normal to the outside of the building in the plan view.	1-15	5
			16	10 vertical and 7 horizontal

Radiant floor systems in concrete slabs must have insulation between the heated portion of the slab and the outdoors.

When space heating hot water pipes or heating elements are set into a concrete slab-on-grade floor, slab-edge insulation from the level of the top of the slab, down 16 in. or to the frost line, whichever is greater (insulation may stop at the top of the footing, where this is less than the required depth), or insulation installed down from the top of the slab and wrapping under the slab for a minimum of 4 ft toward the middle of the slab, is required. The required insulation value for each of these insulating methods is either R-5 or R-10 depending on climate zone as shown in Table 4-8. Any part of the slab extending outward horizontally must be insulated to the level specified in Table 4-8.

When using the performance compliance method with slab-on-grade construction, the standard design includes slab edge insulation as described above using the F-factors in Joint Appendix IV, Table IV.27.

When space heating hot water pipes or heating elements are set into a lightweight concrete topping slab laid over a raised floor, insulation must be applied to the exterior of any slab surface from the top of the slab where it meets the exterior wall, to the distance below ground level described in Table 4-8. If the slab does not meet the ground on its bottom surface, the specified insulation level must be installed on the entire bottom surface of the raised slab. Any part of the slab extending outward horizontally must be insulated to the level specified in Table 4-8. For lightweight slabs installed on raised floors and inside

exterior walls, the overall wall R-value and overall floor R-value (determined as 1/(U-factor)) may be counted toward meeting the minimum R-value requirements specified in Table 4-8.

Raised floor insulation that meets the mandatory minimum R-value for wood floor assemblies also meets the requirement for insulation wrapping under the lightweight topping slab.

Slab edge insulation applied to basement or retaining walls (with heated slab below grade) must be installed so that insulation starts at or above ground level and extends down to the bottom of the foundation or to the frost line, whichever is greater.

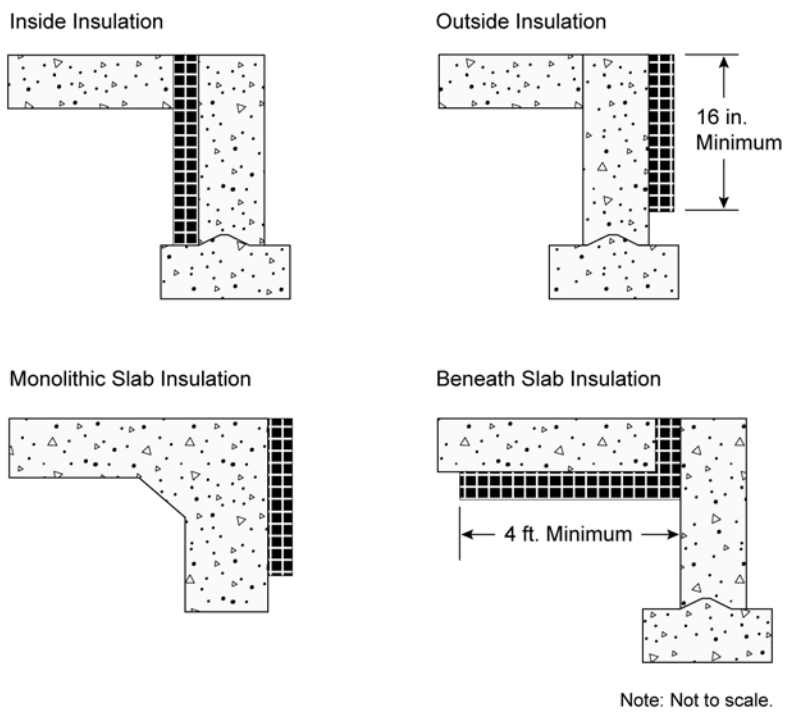

Figure 4-20– Heated Slab-On-Grade Floor Insulation Options

Local conditions (such as a high water table) may require special insulation treatment in order to achieve satisfactory system performance and efficiency. To determine the need for additional insulation, follow the recommendations of the manufacturer of the hydronic tubing or heating element being installed. Where there is a danger of termite infestation, install termite barriers, as required, to prevent hidden access for insects from the ground to the building framing.

In addition to the insulation R-value requirements, the Standards also set mandatory measures related to moisture absorption properties of the insulation and protection of the insulation from physical damage or pest intrusion.

Example 4-5

Question

My client wants a dedicated hydronic-heating system (space heating only), but a few things are unclear: (1) What piping insulation is required? (2) Can I use any compliance approach? (3) Do

I have to insulate the slab with slab edge insulation? and (4) What special documentation must be submitted for this system type?

Answer

(1) The supply lines not installed within a concrete radiant floor must be insulated in accordance with §150(j)—1.0 in. of nominal R-4 on pipes that are 2 in. or less in diameter, and 1.5 in. for pipes greater than 2 in. in diameter.

(2) You can use any compliance approach, but the boiler must meet the mandatory efficiency 80% AFUE.

(3) The slab edge insulation shown in Table 4-8 is required only when the distribution system is a radiant floor system (pipes in the slab). When this is the case the insulation values shown are mandatory measures (no modeling or credit).

(4) No special documentation is required.

Question

What are the slab edge insulation requirements for a hydronic-heating system with the hot water pipes in the slab?

Answer

The requirements for slab edge insulation can be found in §118 and §150(l) of the Standards.

Material and installation specifications are as follows:

• insulation values as shown in Table 4-8,

• protected from physical damage and ultra-violet light deterioration,

• water absorption rate no greater than 0.3% (ASTM-C-272), and

• water vapor permeance no greater than 2.0 per in. (ASTM-E-96-90).

4.6.3 Evaporative Cooling

Credit for evaporative coolers is allowed in all low-rise residential buildings. Evaporative coolers provide cooling to a building by either direct contact with water (direct evaporative cooler, often called a “swamp cooler”), or a combination of a first stage heat exchanger to pre-cool building air temperature and a second stage with direct contact with water (indirect/direct evaporative cooler).

Evaporative coolers may be used with any compliance approach. Using a performance approach, the cooling efficiency is assumed to be SEER of 11.0 for direct systems and 13.0 for indirect/direct systems. The same SEERs can be used for evaporative coolers installed with or without backup air conditioning. When an evaporative cooling system is installed in conjunction with a cooling system that is equipped with a compressor, the efficiency of the most efficient system may be used for compliance.

When selecting evaporative cooling, the following characteristics should be considered:

- Direct evaporative coolers in climates that are both hot and humid may result in uncomfortable indoor humidity levels.

- Indirect/direct evaporative coolers do not increase indoor humidity as much as direct systems and would be unlikely to produce uncomfortable indoor humidity levels, even in hot, humid areas.
- Evaporative coolers may not reduce indoor temperatures to the same degree as air conditioning.

To receive credit at the efficiencies listed above, the evaporative cooling system must meet the following requirements:

Eligibility and Installation Criteria

Evaporative cooler ducts must satisfy all requirements that apply to air conditioner ducts except for diagnostic testing for duct leakage when there is a dedicated duct system for evaporative cooling only.

Thermostats are required. If air conditioning is installed in conjunction with an evaporative cooler, a two-stage thermostat with time lockout is required.

Automatic relief venting must be provided to the building.

Evaporative coolers must be permanently installed. No credits are allowed for removable window units.

Evaporative coolers must provide minimum air movement at the minimum stated air delivery rate certified with the tests conducted in accordance with the Air Movement and Control Association (AMCA) Standard 210 (see Table 4-10 below).

4.6.4 Ground-Source Heat Pumps

Table 4-9 – Standards for Ground Water-Source and Ground-Source Heat Pumps Manufactured on or after October 29, 2003
Source: Table C-8 of the California Appliance Efficiency Regulations, Effective - August 19, 2003

Appliance	Rating Condition	Minimum Standard
Ground water source heat pumps (cooling)	59º F entering water temperature	16.2 EER
Ground water source heat pumps (heating)	50º F entering water temperature	3.6 COP
Ground source heat pumps (cooling)	77º F entering brine temperature	13.4 EER
Ground source heat pumps (heating)	32º F entering brine temperature	3.1 COP

Table 4-10 – Minimum Air Movement Requirements for Evaporative Coolers

Climate Zones	Direct (cfm ft²)	Indirect/Direct (cfm ft²)
1 – 9	1.5	1.2
10 – 13	3.2	1.6
14 – 15	4.0	2.0
16	2.6	1.3

[1] If backup air conditioning is installed, the minimum air movement for all climate zones is 1.0 cfm/sf.

A geothermal or ground-source heat pump uses the earth as a source of energy for heating and as a sink for energy when cooling. Some systems pump water from an aquifer in the ground and return the water to the ground after exchanging heat with the water. A few systems use refrigerant directly in a loop of piping buried in the ground. Those heat pumps that either use a water loop or pump water from an aquifer have efficiency test methods that are accepted by the Energy Commission.

The mandatory efficiencies for ground water source heat pumps are specified in the California Appliance Efficiency Regulations, and repeated in Table 4-9 below. These efficiency values are certified to the Energy Commission by the manufacturer and are expressed in terms of heating Coefficient of Performance (COP) and cooling EER.

For the performance compliance approach, the COP and EER must be converted to HSPF and SEER. When equipment is not tested for SEER, the EER may be used in place of the SEER. When heat pump equipment is not tested for HSPF, calculate the HSPF as follows:

Equation 4-1

$$HSPF = (3.2 \times COP) - 2.4$$

The efficiency of geothermal heat pump systems is dependent on how well the portion of the system in the ground works. Manufacturers' recommendations must be followed carefully to ensure that the system is appropriately matched to the soil types and weather conditions. Local codes may require special installation practices for the ground-installed portions of the system. Verify that the system will meet local code conditions before choosing this type of system to meet the Standards.

4.6.5 Solar Space Heating

Solar space-heating systems are not recognized within either the prescriptive packages or the performance compliance method.

4.6.6 Wood Space Heating

The Energy Commission's exceptional method for wood heaters with any type of backup heating is available in areas where natural gas is not available. If the required eligibility criteria are met, a building with one or more wood heaters may be shown to comply with the Standards using either the prescriptive or performance approaches as described below.

Prescriptive Approach

The building envelope conservation measures of any one of the Alternative Component Packages must be installed. The overall heating system efficiency (wood stove plus back-up system) must comply with the prescriptive requirements.

Performance Approach

A computer method may be used for compliance when a home has wood space heat. There is no credit, however. Both the proposed design and the standard building are modeled with the same system, e.g., with the overall heating system efficiency equivalent to a 78% AFUE central furnace with ducts in the attic insulated to Package D and with diagnostic duct testing.

Wood Heater Qualification Criteria

The Standards establish exceptional method guidelines for the use of wood heaters. If all of the criteria for the wood heat exceptional method are not met, a backup heating system must be included in the compliance calculations as the primary heat source.

The following eligibility criteria apply:

A. The building department having jurisdiction must determine that natural gas is not available.

Note: Liquefied petroleum gas, or propane, is not considered natural gas.

B. The local or regional air quality authority must determine that its authorization of this exceptional method is consistent with state and regional ambient air quality requirements pursuant to Sections 39000 to 42708 of the California Health and Safety Code.

C. The wood heater must be installed in a manner that meets the requirements of all applicable health and safety codes, including, but not limited to, the requirements for maintaining indoor air quality in the *CMC*, in particular those homes where vapor barriers are.

D. The wood heater must meet the EPA definition of a wood heater as defined in Title 40, Part 60, Subpart AAA of the Code of Federal Regulations (40CFR60 Subpart AAA) (see below).

E. The performance of the wood heater must be certified by a nationally recognized agency and approved by the building department having jurisdiction to meet the performance standards of the EPA.

F. The rated output of the wood heater must be at least sixty percent (60%) of the design heating load, using calculation methods and design conditions as specified in §150(h) of the Standards.

G. At the discretion of the local enforcement agency, a backup heating system may be required and be designed to provide all or part of the design heating load, using calculation methods and design conditions as specified in §150(h) of the Standards.

H. The wood heater must be located such that transfer of heat from the wood heater is effectively distributed throughout the entire residential unit, or it must be used in conjunction with a mechanical means of providing heat distribution throughout the dwelling.

- Habitable rooms separated from the wood heater by one free opening of less than 15 ft² or two or more doors must be provided with a positive heat distribution system, such as a

thermostatically controlled fan system. Habitable rooms do not include closets or bathrooms.

- Wood heaters on a lower level are considered to heat rooms on the next level up, provided they are not separated by two or more doors.

I. The wood heater must be installed according to manufacturer and local enforcement agency specifications and must include instructions for homeowners that describe safe operation.

J. The local enforcement agency may require documentation that demonstrates that a particular wood heater meets any and all of these requirements.

40CFR60 Subpart AAA includes minimum criteria for wood heaters established by the US EPA. These criteria define a wood heater as an enclosed, wood-burning appliance capable of and intended for space heating or domestic water heating that meets all of the following criteria:

- an air-to-fuel ratio averaging less than 35 to 1,
- a firebox volume less than 20 cubic ft.,
- a minimum burn rate less than 5 kilogram/hour (11.0 lbs/hr), and
- a maximum weight of less than 800 kilograms (1760 lbs).

The federal rules explicitly exclude furnaces, boilers, cook stoves, and open masonry fireplaces constructed on site, but include wood-heater inserts.

Wood Water Heating

Credit is also available for the use of wood heat with water heating systems. See the water heating chapter of this manual.

Example 4-6

Question

Are pellet stoves treated the same as wood stoves for the purposes of standards compliance?

Answer

Yes.

Example 4-7

Question

If a wood stove is installed in a wall, does it have to meet the fireplace requirements of standards §150(e)?

Answer

No. A wood stove that meets EPA certification requirements does not have to meet any requirements applicable to fireplaces.

4.6.7 Gas Appliances

§115 Pilot Lights

As noted in an earlier section, pilot lights are prohibited in fan-type central furnaces. The Standards also prohibit pilot lights in cooking appliances, pool heaters, and spa heaters. However, one exception is provided for household cooking appliances without an electrical supply voltage connection and in which each pilot consumes less than 150 Btu/h.

For requirements related to installation of fireplaces, decorative gas appliances, and gas logs, see the envelope chapter.

4.7 Compliance and Enforcement

The purpose of this section is to highlight compliance documentation and field verification requirements related to heating and cooling systems.

4.7.1 Design

The initial compliance documentation consists of the Certificate of Compliance (CF-1R) and the mandatory measures checklist (MF-1R). These documents are included on the plans and specifications. The CF-1R has a section where special modeling features are listed. The following are heating and cooling system features that should be listed in this section if they exist in the proposed design:

Special Features Not Requiring HERS Rater Verification:

- Ducts in a basement
- Ducts in a crawlspace
- Ducts in an attic with a radiant barrier
- Hydronic heating and system design details
- Gas-fired absorption cooling
- Zonal control.

Special Features Requiring HERS Rater Verification

- Refrigerant charge
- Thermostatic expansion valve
- Duct sealing
- Duct design
- Reduced duct surface area and ducts in conditioned space
- Air handler fan watt draw
- Maximum cooling capacity
- Adequate air flow

- High efficiency EER
- Ducts <12 ft outside conditioned space.
- Information summarizing measures requiring field verification and diagnostic testing is presented in Table R-71 in RACM Manual Appendix, Page 7-3 . The protocols that must be used to qualify for compliance credit are in the Residential ACM Manual Appendices.

4.7.2 Construction

During the construction process, the contractor and/or specialty contractors complete the necessary sections of the Installation Certificate (CF-6R). There are four sections that should be completed:

- HVAC Systems
- Duct Leakage and Design Diagnostics
- Refrigerant Charge Measurement
- Duct Location and Area Reduction Diagnostics.

4.7.3 Field Verification and/or Diagnostic Testing

The HERS rater may visit the site to complete heating and cooling system portions of the Certificate of Field Verification and Diagnostic Testing (CF-4R). There are several sections of this form that relate to heating and cooling. The following require field verification and diagnostic testing if they are used in the proposed design for compliance:

- Ducts in conditioned space
- Duct Design
- Diagnostic supply duct location, surface area, and R-value (including buried ducts)
- High efficiency air conditioner EER
- Refrigerant charge or TXV
- Forced air system fan flow/adequate airflow
- Air handler fan watt draw
- Verified maximum cooling capacity
- Verified duct leakage.

Field verification is necessary when credit is taken for the measure. For example, maximum cooling capacity need only be HERS verified if maximum cooling capacity was used to achieve credit in the proposed design

4.8 Glossary/Reference

Refer to Joint Appendix I for terms used in this chapter.

4.8.1 Refrigerant Charge Testing

This section provides an overview of the procedures for verifying refrigerant charge. The prescriptive requirements require this testing if the air conditioner does not have a TXV. Appendix RD of the *Residential ACM Manual* describes the procedures in detail, and refrigeration technicians who do the testing should refer to these and other technical documents. This section is just a summary intended for those who need to know about the procedures but will not be doing the testing.

Overview

A residential split system air conditioner undergoes its final assembly at the time of installation. This installation must be verified to ensure proper performance. One important factor is the amount of refrigerant in the system (the charge). Air conditioner energy efficiency suffers if the refrigerant charge is either too low or too high. In addition to a loss of efficiency, both too much and too little refrigerant charge can lead to premature compressor failure.

To help avoid these problems, the prescriptive standards require that systems be correctly installed. This section describes the measurements and tests required to verify proper refrigerant charge. The testing requirement applies only to ducted split system central air conditioners and ducted split system central heat pumps. An alternative to refrigerant charge testing is installing a TXV, which reduces the effect of low refrigerant. The testing requirement does not apply to packaged systems, for which final assembly is completed in the factory.

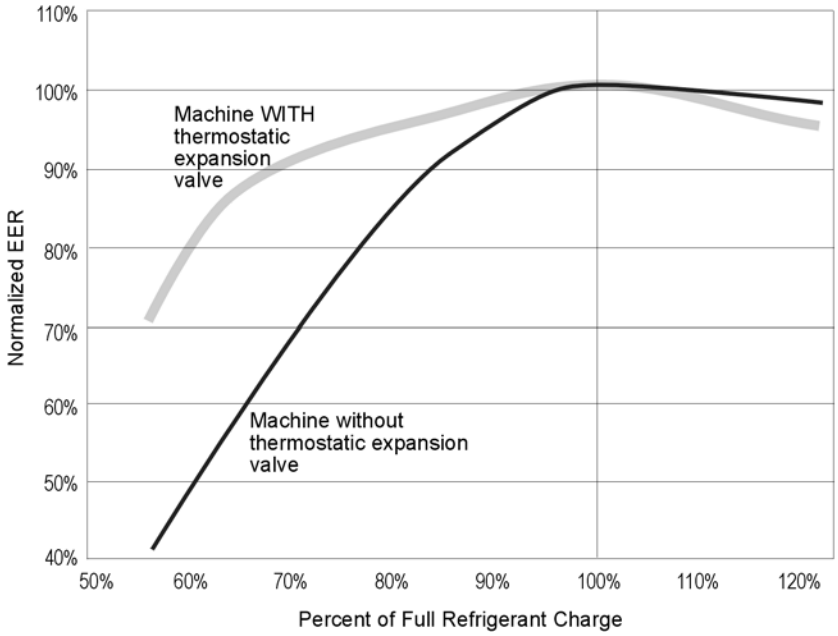

Figure 4-21 – Benefit of Thermostatic Expansion Valve

Testing refrigerant charge by the standard method requires that airflow be adequate for a valid test. This can be verified simultaneously with the Temperature Split Method, or with any of the three methods in Appendix RE of the Residential ACM Manual before the refrigerant charge test. These three methods are RE3.1.1, Plenum Pressure Matching Measurement, RE3.1.2, Flow Capture Hood Measurement, and RE3.1.3, Flow Grid Measurement. When one of these three methods is used, the system may qualify for a verified adequate airflow compliance credit and a verified fan energy compliance credit.

The testing must occur after the HVAC contractor has installed and charged the system in accordance with the manufacturer's specifications. For homes with multiple systems, each system must be tested separately.

Figure 4-21 shows how a thermostatic expansion valve can help mitigate the efficiency penalty of a system with too little refrigerant (undercharged).

Two procedures are described here for testing refrigerant charge. The first procedure, the Standard Charge Measurement, applies when the outdoor temperature is above 55ºF and is the only procedure used by a HERS rater. All HERS rater charge verification is done above 55ºF. The second procedure, Alternate Charge Measurement, must be used by the installation technician when the outdoor temperature is below 55ºF.

Standard Charge Measurement Procedure

The first step is to turn on the air conditioning system and let it run for at least 15 minutes in order to stabilize temperatures and pressures. While the system is warming up and stabilizing, the HERS rater or the installer may fit the instruments needed to take the measurements.

In order to have a valid charge test, the air flow must be verified. One option is to simultaneously perform the temperature split test. As an alternative, one of the three measurements in ACM Manual Appendix RE can be performed with a measured airflow in excess of 400 cfm/ton (dry coil). If one of the optional tests is used, there is the potential for additional compliance credits.

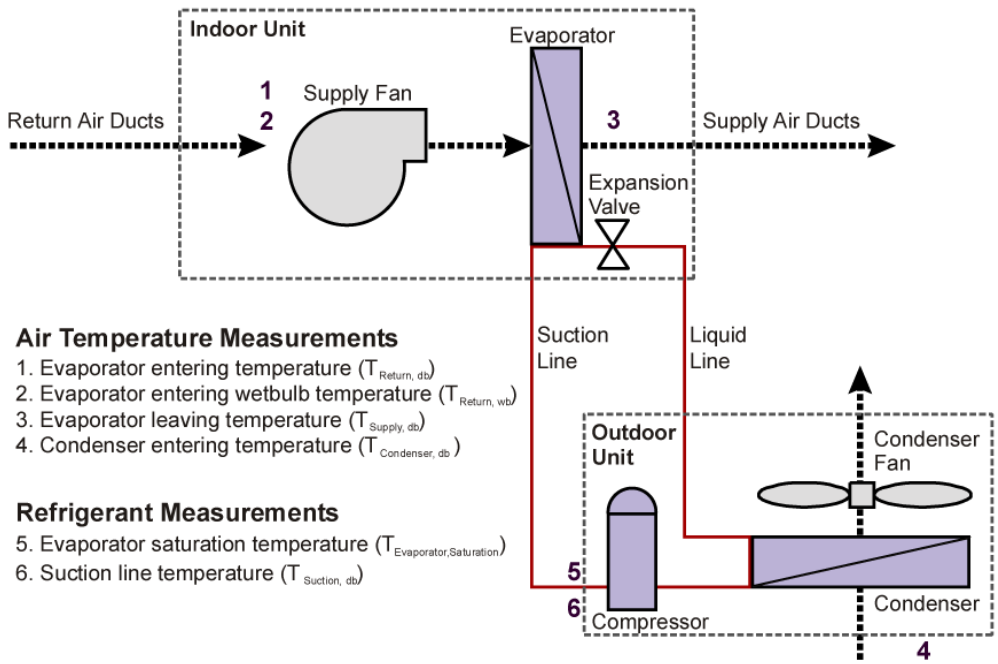

Figure 4-22 – Measurement Locations for Refrigerant Charge and Airflow Tests

Mixed air temperatures are measured in the return plenum before the blower. At this location (see points 1 and 2 in *Figure 4-22*), both the drybulb and wetbulb temperatures are measured. The supply air drybulb temperature is measured in the supply plenum down stream of the cooling coil (see point 3 in *Figure 4-22*). Finally the air temperature is measured where the air enters the outdoor condensing coil (see point 4 in *Figure 4-22*). It is important that the outdoor temperature sensor be shaded from direct sun. In addition to the air temperature measurements, two refrigerant properties need to be measured. Both of these measurements are taken near the suction line service valve before the lines enter the outdoor unit (see points 5 and 6 in *Figure 4-22*). The first measurement is the temperature of the refrigerant, which is taken by attaching a thermocouple to the outside of the suction line and insulating it against the outdoor temperature (a clamp-on thermocouple designed for this purpose may also be used). The second measurement determines the saturation temperature of the refrigerant in the evaporator coil. The saturation temperature is read directly from the low side refrigerant gauge for the refrigerant used in the machine. Alternatively the saturation temperature may be determined from the low side pressure and a saturation temperature table for the refrigerant. There is a one-to-one relationship between saturation temperature and saturation pressure.

The *Charging Method* and *Temperature Split Method* or an approved alternative are used to determine if the refrigerant charge test is valid and if the refrigerant charge is acceptable. The procedure is used when the outdoor temperature is 55°F or higher and after the HVAC installer has installed and charged the system in accordance with the manufacturer's specifications. The procedure requires properly calibrated digital thermometers, thermocouples, and a refrigerant gauge.

Superheat Charging Method

The rater and/or the installer must allow the system to run continuously for 15 minutes before performing the *Superheat Charging Method* measurements. Unless an alternative airflow verification is used the *Temperature Split Method* is performed simultaneously with the *Superheat Charging Method.*

Table 4-11 – Structure of Target Superheat Temperature

		Return Air Wet-Bulb Temperature (°F) ($T_{Return, wb}$)									
		50	51	52	53	54	55	..	..	75	76
Condenser Air Dry-Bulb Temperature (°F) ($T_{condenser, db}$)	55	Target Superheat Temperatures = (Suction Line Temperature minus Evaporator Saturation Temperature) – See Residential ACM Manual Appendix RD									
	56										
	57										
	..										
	..										
	93										
	94										
	95										

Table 4-12 – Structure of Target Temperature Split (Return Dry-Bulb minus Supply Dry-Bulb)
Complete table is in Residential ACM Manual Appendix RD

		Return Air Wet-Bulb Temperature (°F) ($T_{Return, wb}$)									
		50	51	52	53	54	55	..	..	75	76
Return Air Dry–Bulb (°F) (T return, db)	70	Target Temperature Splits = (Return Dry Bulb Temperature minus Supply Dry Bulb Temperature) – See Residential ACM Manual Appendix RD									
	71										
	72										
	..										
	..										
	82										
	83										
	84										

The *Superheat Charging Method* involves comparing the measured superheat to a target value from a table. The measured superheat is the suction line temperature ($T_{Suction, db}$) minus the saturation temperature of the refrigerant ($T_{Evaporator, Saturation}$). The target superheat is read from a table (see Appendix RD in the *Residential ACM Manual*). For illustration purposes, the structure of the table is shown below as Table 4-11. If the actual superheat and the target superheat are within 5ºF of each other, the system passes the required refrigerant charge criterion. If the actual superheat exceeds the target superheat by more than 5°F, then the system is undercharged. If the actual superheat minus the target superheat is between -5° and -100°F, then the system is overcharged. Only an EPA-certified technician may add or remove refrigerant.

The Temperature Split Method

The rater and/or the installer must allow the system to run continuously for 15 minutes before performing the *Temperature Split Method* measurements. The *Temperature Split Method* is performed simultaneously with the *Superheat Charging Method.*

With the *Temperature Split Method,* the air temperature drop across the cooling coil is compared to a target value read from a table. This temperature drop is called the temperature split, thus the name. The actual temperature split is the difference between the drybulb temperature in the return (entering the evaporator) and the drybulb temperature in the supply (leaving the evaporator).

Equation 4-2

Actual Temperature Split = $T_{Return, db} - T_{Supply, db}$

The Target Temperature Split depends on return air wet-bulb temperature ($T_{Return, wb}$) and return air dry-bulb temperature ($T_{Return, db}$). Table 4-12 shows the organization of the table. Residential ACM Manual Appendix RD has the full table. If the actual and target are within plus 3°F and minus 3°F, then the system has sufficient airflow for a valid refrigerant charge test.

If the actual temperature split exceeds the target temperature split by more than 3°F, then airflow is inadequate and must be increased. Increasing airflow can be accomplished by eliminating restrictions in the duct system, increasing blower speed, cleaning filters, or opening registers. After the installer corrects the problem and verifies adequate airflow through the installer's own testing, the HERS rater repeats the measurements to verify a correct refrigerant charge and airflow.

If the actual temperature split is more than 3°F below the target temperature split, the measurement procedure must be repeated making sure that temperatures are measured where the airflow is mixed. If the re-measured numbers still show that the actual temperature split is more than 3°F below the target temperature split, then the system passes, but it is likely that the air conditioner is not producing the capacity it was designed to produce. There may be problems with this air conditioner. (It is possible, but unlikely, that airflow is higher than average.)

Alternate Charge Measurement Procedure

This section describes the Alternate Charge Measurement Procedure. With this method, the required refrigerant charge is calculated using the *Weigh-In Charging Method,* and adequate airflow across the evaporator coil is verified using the *Measured Airflow Method*. This method is used only when the outdoor temperature is below 55°F. EPA-certified technicians must perform the procedure, as follows:

- calculate the refrigerant charge adjustment needed for refrigerant lines, which are longer, shorter, or of different diameter from the standard lineset for this air conditioner, and
- by weight, add or remove the proper amount of refrigerant to compensate for the actual lineset

5. Water Heating Requirements

5.1 Overview

5.1.1 Water Heating Energy

Water heating energy use is important in low-rise residential buildings. Standby loss is typically more than a quarter of a gas storage type water heater system's total energy use. However, when the system fuel is natural gas, there are no generation losses as are associated with electricity. Fuel type is very important in determining water heating energy use. While natural gas, LPG or oil can be burned directly to heat water, electricity is typically generated in a power plant. Approximately two thirds of the source energy used to generate electricity is lost in the generation and distribution processes. Any electric water heating system must automatically account for the inefficiency of the fuel type. Standard electric water heaters are not considered energy efficient for this reason. Electric heat pump water heaters, however, are closer to the efficiency of typical gas systems, because they use the outdoor air as a heat source in heating water. The relative values of the losses associated with different sources of energy are integrated into the TDV multiplier.

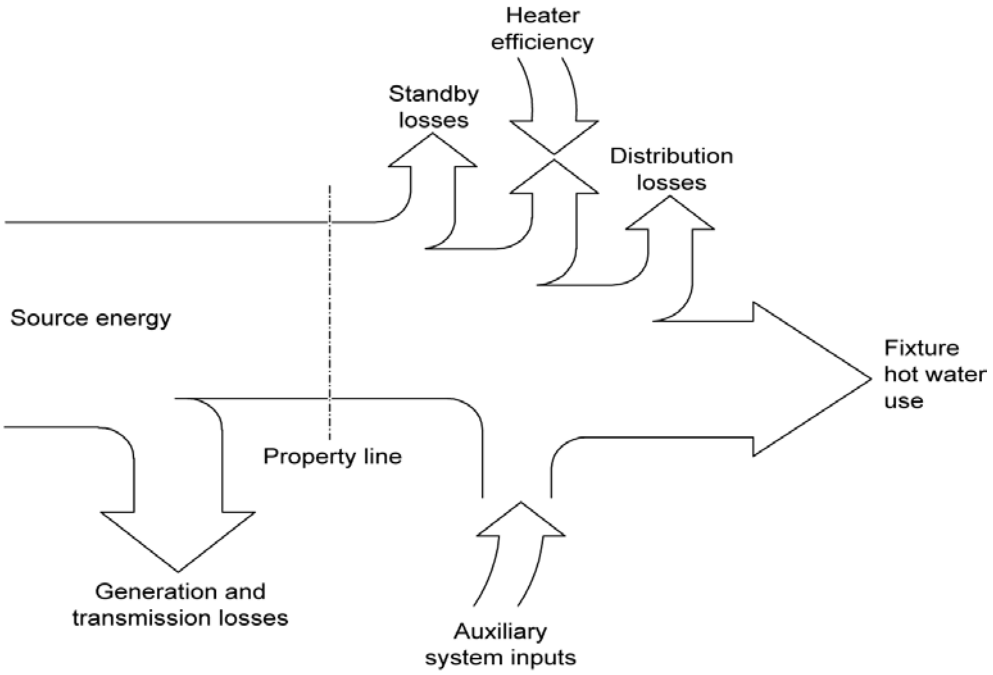

5.1.2 What's New for 2005

Probably the biggest change is in compliance methods. Due to the change to TDV energy calculations, the water heating budget calculation is no longer practical by hand, and the water heating forms have been eliminated. Therefore, if a system does not meet the prescriptive requirements or an approved alternative system, then an approved performance calculation method is necessary.

The prescriptive requirements have been expanded to allow instantaneous gas water heaters and central gas water heaters that serve multiple dwelling units.

For central systems serving multiple dwelling units, the baseline for performance calculations has been changed so that it also has a central system. The baseline when each unit has its own water heater remains the same, each unit in the baseline will also have its own water heater. The impact of this change will be to increase the stringency of the water heating budget for central systems.

An option is added that allows pipes to be considered insulated if they are located in the attic and buried by ceiling insulation.

In the discussion below, a distinction is made for applicability of various criteria and definitions of systems serving a single dwelling unit versus those serving multiple dwelling units. Some details apply to both. Also, some details applicable to a system serving a single dwelling unit are also applicable to piping within a dwelling unit served by a central water heater or boiler.

5.1.3 Water Heater Types

The following water heater types are recognized by the standards.

- Standard Water Heater - Storage Gas
- Large Storage Gas
- Storage Electric
- Storage Heat Pump
- Instantaneous Gas
- Instantaneous Electric
- Indirect Gas

5.1.4 Distribution System Types

The water heating *distribution system* is the configuration of piping, pumps and controls that deliver hot water from the water heater to fixtures within the building. The standard distribution system for a system serving a single dwelling unit has no recirculation pumps and partial pipe insulation. The standard system includes piping insulation from the water heater to the kitchen fixtures (see Prescriptive Requirements) and the first five ft of piping on the inlet and outlet from the water heater (see Mandatory Requirements).

The standards recognize other distribution systems that may be more or less efficient than the standard system. Table 5-1 gives brief definitions of all of the distribution system types for water heating serving a single dwelling that are recognized by the standards.

Table 5-1 – System Component Descriptions: Distribution Systems within a Dwelling Unit

Distribution Systems	Description
Standard (STD)	Standard system without any pumps for distributing hot water. The first 5 ft of pipes from the storage tank is insulated for both hot and cold water pipes. Pipes from the water heater to the kitchen that are 0.75 in. or larger are insulated. Pipe insulation is required per §150(j).
Point of Use (POU)	System with no more than 8 ft horizontal distance between the water heater and hot water fixtures, except laundry.
Pipe Insulation (PIA)	All hot water pipes are insulated per the requirements of §150(j).
Standard Pipes with No Insulation (SNI)	Standard system, but without insulation on the pipes to the kitchen.
Parallel Piping (PP)	Individual pipes radiate from a manifold on the water heater to each of the fixtures.
Recirculation No Control (RNC)	Distribution system using a pump to recirculate hot water to branch piping though a looped hot water main. Pump operation and water flow are continuous. Pipe insulation is required per §150(j).
Recirculation with Temperature Control (RTmp)	Recirculation system that uses temperature controls to cycle pump operation to maintain recirculated water temperatures within certain limits. Pipe insulation is required per §150(j).
Recirculation with Timer Control (RTm)	Recirculation system that uses a timer control to cycle pump operation based on time of day. Pipe insulation is required per §150(j).
Recirculation with Timer and Temperature Control (RTmTmp)	Recirculation system that uses both temperature and timer controls to regulate pump operation. Pipe insulation is required per §150(j).
Recirculation with Demand Control (RDmd)	Recirculation system that uses brief pump operation to recirculate hot water to fixtures just prior to hot water use when a demand for hot water is indicated. Pipe insulation is required per §150(j).

For water heating systems that serve multiple dwellings, there are separate distribution system definitions and requirements. The terms “Standard,” “Point of Use,” “Standard Pipes with No Insulation” and “Parallel Piping” do not apply to systems serving multiple dwellings. The term “Pipe Insulation” has a different meaning for central water heating systems than for systems serving a single dwelling unit. Piping for recirculation loops is required by the mandatory measures to be insulated, but a higher level of insulation can also save energy and is recognized by the compliance software programs.

Additionally, more information is required for demonstrating compliance of systems serving multiple dwelling units. The compliance documentation must specify the length of piping that is inside the building, outside, or underground, and the insulation R-value on each portion

The base case system used to develop the standard budget for central water heating assumes a minimal amount of piping outside and none underground. It also assumes a recirculation pump with a timer control, and R-4 or R-6 insulation on the pipes (depending upon pipe diameter). The new proposed system also is assumed to have a recirculation pump, but in an existing multiple dwelling building it may lack controls. There is an exception for multifamily

buildings of six units or less using the performance approach when no recirculation pump is installed. However, the distribution system in the Standard Design and Proposed design will both assume a pump with timer controls. See §113(c) 2 and §151(f) 8 C

5.2 Mandatory Requirements

5.2.1 Equipment Certification

§113(a)

Water heaters must be certified by manufacturers as complying with the *Appliance Efficiency Regulations* at the time of manufacture. Regulated equipment may not be sold in California unless it is certified. This includes the following types of water heaters:

- Gas water heaters and boilers
- Heat pump water heaters
- Electric water heaters and boilers
- Oil-fired water heaters and boilers.

5.2.2 Equipment Efficiency

§113(b), §111

Small water heaters are regulated by the federal standards. The efficiency requirements for such equipment are given in Table 5-2 below. The efficiency rating for small water heaters is called the energy factor (EF). The EF is intended to represent the overall efficiency of a water heater, combining the recovery efficiency and standby losses. The Energy Factor for water heaters other than heat pump water heaters is a number that varies between zero and less than one, and is based on standard test conditions designed to represent a typical 24-hour period. During the test, 64.3 gallons of hot water is withdrawn in six equal draws at one hour intervals and then the water heater sits idle for the remaining 24 hour period. Set point temperatures and inlet temperatures are standardized for the test.

Table 5-2 – Minimum Energy Factor Small Water Heaters

Source: Energy Commission Appliance Efficiency Regulations, Table F-4 – Standards for Small Federally-Regulated Water Heaters

Type	Size	Energy Factor (EF)
Gas Storage	≤ 75,000 Btu/hr	0.67-(0.0019*V)
Gas Instantaneous	≤200,000 Btu/hr	0.62-(0.0019*V)
Oil Storage	≤105,000 Btu/hr	0.59-(0.0019*V)
Oil Instantaneous	≤210,000 Btu/hr	0.59-(0.0019*V)
Electric Storage (exc. Table top)	≤ 12KW	0.97-(0.00132*V)
Electric Table Top	≤ 12KW	0.93-(0.00132*V)
Electric Instantaneous (exc. table top)	≤ 12KW	0.93-(0.00132*V)
Heat pump Water Heater	≤ 24 Amps	0.97-(.00132*V
Note: V refers to tank volume (gal). Effective Date January 20, 2004		

The energy efficiency of equipment that is larger than the sizes indicated in Table 5-2, are regulated by the California Appliance Efficiency Regulations. Energy factor is not used for larger equipment, but rather minimums are specified for thermal efficiency and standby loss as shown in Table F-3 (see Appendix B).

The minimum efficiency of new water heaters is not something that needs to be checked at the building counter when the prescriptive method is used, since this is an appliance standard and applies at the point of sale. Water heater efficiency may be a factor in compliance, however, when the performance method is used.

Energy Factor

Used to measure the efficiency of water heaters, the Energy Factor (EF) is “the ratio of energy output to energy consumption of a water heater, expressed in equivalent units, under designated operating conditions over a 24-hour use cycle, as determined using the applicable test method in the Appliance Efficiency Regulations." [§101]

HVAC equipment subject to certification includes: • Room air conditioners • Central air conditioners with a cooling capacity less than 135,000 Btu/hr • Central air conditioning heat pumps • Fan type central furnaces with input rate less than 400,000 Btu per hour • Boilers • Wall furnaces • Floor furnaces • Room heaters • Unit heaters • Duct furnaces	The following types of gas space heaters do not need to be certified: • Gravity type central furnaces • Heaters installed in mobile homes at the time of construction • Heaters designed expressly for use in recreational vehicles and other mobile equipment • Fan type central furnaces with input rates of at least 400,000 Btu per hour • Infrared heaters

Table 5-3 – Framing Percentages

Assembly Type	Framing Spacing	Framing Percentage
Walls	16"o.c.	15 %
	24"o.c.	12 %
	48"o.c.	9 %
Floors	16"o.c.	10 %
	24"o.c.	7 %
Roofs	16"o.c.	10 %
	24"o.c.	7 %
	48"o.c.	4 %

5.2.3 Pipe Insulation

§150(j)2 Pipe Insulation

Pipe insulation is a mandatory requirement in the following cases:

- Storage tanks for a non-recirculating system must have pipe insulation on both hot and cold water pipes for a length of five ft. There is no exception for water heater piping in the conditioned space.
- Recirculating sections of domestic hot water systems must be insulated (the entire length of piping, whether buried or exposed).
- Indirect fired domestic hot water system piping from the heating source to the storage tank.

Piping *exempt* from the mandatory insulation requirement includes:

- Factory installed piping within space conditioning equipment.
- Piping that penetrates framing members is not required to have insulation where it penetrates the framing. However, if the

framing is metal then some insulating material must prevent contact between the pipe and the metal framing.

- Piping located within exterior walls other than for a recirculation loop, does not need to be insulated if all the requirements for Insulation Installation Quality are met (See Appendix ACM RH-2005 in the *Residential ACM Manual).*
- Piping located in the attic does not need pipe insulation if it is buried by at least 4 in. of ceiling insulation.
- Piping that serves process loads, gas piping, cold domestic water piping (other than within five feet of the water heater), condensate drains, roof drains, vents, or waste piping.

Other installation information:

- No insulation should be installed closer than six in. from the flue. If possible, bend the pipe away from the flue. Otherwise, it may be necessary to stop pipe insulation short of the storage tank (see *2001 California Mechanical Code*, Chapter 3, Table 3-3).
- All pipe insulation seams should be sealed.
- Installed piping may not be located in supply or return air plenums.
- Hot and cold water piping, when installed in parallel runs should be a minimum of 6 in. apart.
- If a fire wall interrupts the first 5 ft of pipe, the insulation may be interrupted at the wall and continued on the other side.

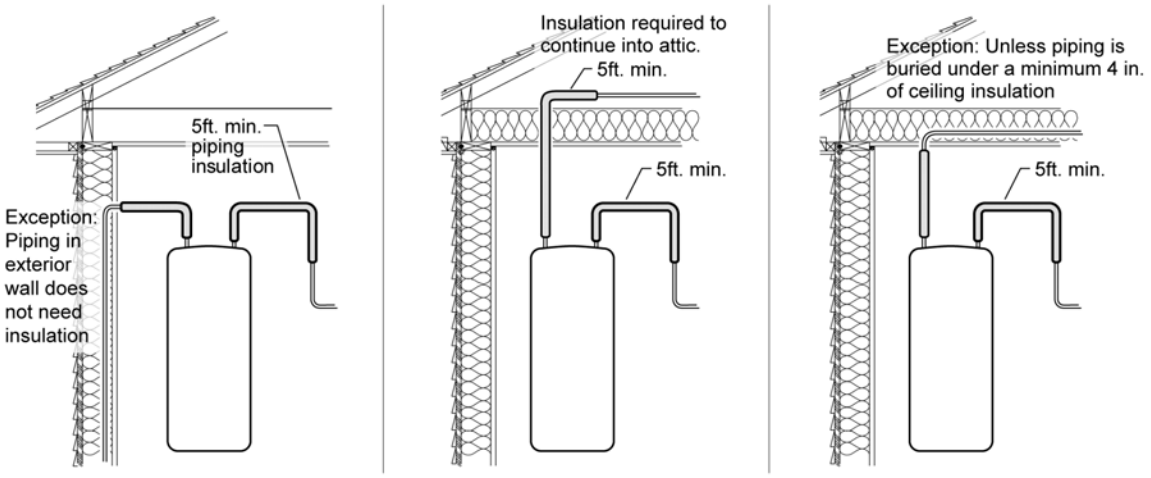

Figure 5-1 – Meeting Pipe Insulation Requirements for Storage Tank Water Heaters

Table 150-B

Where insulation is required as described above, one in. of R-4 insulation is typically required. This requirement applies to domestic hot water pipe (above

105° F) when the pipe diameter is two in. or smaller, the water temperature is between 105°F and 201°F, and the insulation conductivity between 0.24 and 0.28 Btu-in/hr-ft^2-°F (typical of cellular foam pipe insulation material). One and one half in. insulation is required on pipes greater than 2 in.

5.2.4 Insulation Protection

§150(j)3.

If hot water piping insulation is exposed to weather, it must be suitable for outdoor service. For typical cellular foam pipe insulation, this means protection with aluminum, sheet metal, painted canvas, plastic cover, or a water retardant paint coating that shields from solar radiation.

5.2.5 Certification of Showerheads and Faucets

§113(a)

Maximum flow rates are set by the Appliance Efficiency standards, and all faucets and showerheads sold in California must meet these standards. The limits for showerheads are 2.5 gallons per minute (gpm) at 80 psi water pressure. The limit for lavatory faucets and kitchen faucets is 2.2 gpm at 60 psi.

5.2.6 Storage Tank Insulation

§150(j)1 Tank Insulation

Exterior tank insulation (R-12 wrap) is a mandatory requirement for storage gas, propane or oil water heaters that have an energy factor of less than 0.58. The minimum efficiency for small water heaters up to 50 gallons is 0.58EF or greater, effectively eliminating the exterior tank insulation requirement. However, for water heater with capacity of 50 gallons or greater, a wrap may be required.

Large storage water heaters with a rated input greater than 75,000 Btu/h that are not rated with an EF are not required to have an external R-12 insulation blanket.

§113(c)4.

Any unfired tanks (used as a back-up for solar water heating or as storage for a boiler) must either be insulated externally with R-12 or have a label indicating the tank is internally insulated with R-16. Alternatively, a tank can comply with this mandatory measure if calculations are provided that show that the average heat loss is less than 6.5 Btu/hr-ft^2 when there is a temperature difference of 80ºF between the water in the tank and the ambient air.

5.2.7 Solar or Recovered Energy in State Buildings

§113(c)5.

Low-rise residential buildings constructed by the State of California shall have solar water heating systems. The solar system shall be sized and designed to

provide at least 60% of the energy needed for service water heating from site solar energy or recovered energy. See the Compliance Options section below for more information about solar water heating systems.

5.2.8 Pool and Spa Equipment

§115

Pool and spa heaters may not have continuously burning pilot lights.

§114

Before any pool or spa heating system or equipment may be installed, the manufacturer must certify to the Energy Commission that the system or equipment complies with §114. The requirements include minimum heating efficiency, an on-off switch, permanent operating instructions, no pilot light, and no electric resistance heating. There are two exceptions for electric heaters, which may be installed for:

- Listed package units with fully insulated enclosures (e.g., hot tubs), and with tight-fitting covers, insulated to at least R-6.
- Pools or spas getting 60% or more of their annual heating from site solar energy or recovered energy.

Any heated pool or spa must be installed with all of the following:

- At least 36 in. of pipe between the filter and heater to allow for the future addition of solar heating equipment.
- A cover for outdoor pools or outdoor spas except for pools or spas deriving at least 60% of the annual heating energy from site solar energy or recovered energy.

If the heating system or equipment is for a pool:

a. The pool must have directional inlets to adequately mix the pool water.

b. The circulation pump must be capable of being set to run for the minimum number of hours to maintain the water in an acceptable condition and to run at off-peak electric demand periods.

Example 5-1

Question

Under what circumstances is a constantly (or continuously) burning pilot light prohibited on certain appliances?

Answer

For compliance with the building standards, §115 prohibits continuously burning pilot lights for some natural gas burning equipment (this does not include liquefied petroleum gas burning appliances). §115 prohibits continuous pilots on the following types of equipment:

• Household cooking appliances with an electrical supply voltage connection in which each pilot consumes 150 Btu/hr or more

- Pool heaters
- Spa heaters
- Fan type central furnaces

§150 (e) prohibits continuously burning pilot lights for:

- Fireplaces
- Decorative gas appliances
- Gas logs

For compliance with federal and state appliance regulations (which apply to any appliance sold or offered for sale in California), a constant burning pilot light is prohibited on:

- Gas kitchen ranges and ovens with an electric supply cord
- Pool heaters, except those that burn liquefied petroleum gas

Example 5-2

Question

I thought I was supposed to insulate the water heater pipes for either the first 5 ft or the length of piping before coming to a wall, whichever is less. Did I misunderstand?

Answer

Yes. The requirement is that you must insulate the entire length of the first 5 ft, regardless of whether there is a wall (standards, §150(j)2). You have two options: (1) interrupt insulation for a fire wall and continue it on the other side of the wall, or (2) run the pipe through an insulated wall, making sure that the wall insulation completely surrounds the pipe.

Example 5-3

Question

When insulating the water heater piping, do I need to put insulation on the first 5 ft of cold water pipe?

Answer

Yes. §150(j)2 requires insulation on the cold water pipe also. When heated, the water expands and pushes hot water out the cold water line. This can start thermosyphoning, which continues to remove heat from the stored water. The insulation helps reduce this effect.

Example 5-4

Question

When I'm insulating the pipes for a recirculating water-heating system, I insulate the entire length of hot water pipes that are part of the recirculation loop. Do I also need to insulate the runouts?

Answer

No. Since the water in runouts does not recirculate, they do not need to be insulated. However, the standard budget in a performance calculation will assume the pipes larger than ¾ in. diameter are insulated all the way to the kitchen faucet, so your project may suffer an energy penalty for not insulating them.

5.3 Prescriptive Requirements

5.3.1 Pipe Insulation on Lines to Kitchen

§ 151 (f)8

It is a prescriptive requirement that all hot water pipes of ¾ in. or larger that run from the heating source to the kitchen fixtures must be insulated. The amount of insulation required is described above under mandatory requirements, typically one inch. Since this is a prescriptive requirement, it may be possible to comply without insulation if the water heating system as a whole meets the performance standard described in §151(b)1 or if the building as a whole complies under the performance method.

5.3.2 Systems Serving Individual Dwelling Units

Package D

§ 151(b)1 and 151(f)8

To meet the prescriptive requirements of Package D, systems serving individual dwelling units shall have a single gas, propane or oil storage type water heater with a tank capacity less than or equal to 50 gallons and a standard distribution system (no recirculating pumps). A single gas, propane or oil instantaneous water heater is also acceptable. Exterior tank insulation is only required for storage gas water heaters with an EF lower than 0.58.

The other option under the prescriptive compliance method is to meet the TDV energy budget for water heating as described in §151(b)1 of the standards. This option may be used to show equivalency to the prescriptive requirements for all other water heating systems. This path requires a rather detailed calculation that is only practical using computer compliance programs. However, Table 5-4 shows a few alternative water heater systems that have been precalculated to comply when serving a single dwelling unit. These are only a few of many possible combinations that will comply.

Table 5-4 – Preapproved Alternative Water Heating Systems for Single Dwelling Units (Equivalent to prescriptive requirement)

System type	System Approved
Multiple (more than one) Instantaneous gas or propane with no pilot light and an energy factor of 0.85 or greater	YES
Heat pump water heater of 50 gallons or less with an energy factor of 2.5 or greater with a solar system contributing at least 25% of the total water heating requirements	YES
Two 50 gallon or less storage gas or propane fired units each with energy factor of 0.67 or greater and pipe insulation	YES
Storage gas of 50 gallons or less with an energy factor of 0.59 or greater with Parallel Piping	YES
Storage Gas of 50 gallons or less with an energy factor of 0.62 or greater with Demand Recirculation	YES
Storage Gas of 50 gallons or less with an energy factor of 0.58 or greater with time and temperature recirculation control and a solar system contributing at least 25% of the total water heating energy use	YES
50 Gal Electric with an energy factor of 0.94 or greater, pipe insulation and solar with at least a 60% solar fraction.	YES (only in areas where natural gas is not available)
Water Heater heat pump of 50 gallons or less with an energy factor of 2.5 or greater and pipe insulation	YES (only in areas where natural gas is not available)

Package C

If Package C is used for overall compliance, an electric water heater is permitted only if it meets the following requirements:

- Storage tank capacity is 50-gallon or less;
- Standard or point of use distribution system (non-recirculating);
- Water heater is located within the building envelope; and
- A solar system or a wood stove boiler provides at least 25% of the water heating requirements. The wood stove boiler credit is not allowed in Climate Zones 8, 10 or 15, or in other jurisdictions that do not allow wood stoves.

Example 5-5

Question

How do the standards apply to a single family residence with one non-recirculating 40-gallon gas water heater?

Answer

This qualifies as a standard water heating system and complies automatically. No water heating calculations are required, although they may be performed to take credit for a particularly efficient water heater.

Example 5-6

Question

A 1,800 ft2 single family residence has two identical 30-gallon gas storage tank water heaters and a point of use distribution system. Does this comply?

Answer

Because there are two water heaters, this system does not meet the standard prescriptive water heating systems requirements of §151(f)8, the system must be shown to meet the water heating budget of §151(b)1. The precalculated values in Table 5-4 above shows that this system with pipe insulation and an energy factor of 0.67 meets the energy budget. If compliance credit is desired, then the performance compliance method may be used.

Example 5-7

Question

A 6,000-ft2 single family residence has 3 storage gas water heaters (40 gallon, 30 gallon and a 100-gallon unit with 80,000 Btuh input). Does it comply?

Answer

The system does not meet the standard requirements and must be shown to meet the water heating budget of §151(b)1. Therefore a performance calculation is required, either for the water heating system on its own or as part of the whole building approach.

Example 5-8

Question

A single family residence has one non-recirculating 50-gallon gas water heater. The water heater has an input rating of 76,000 Btu/hr. Does it comply?

Answer

Even though this water heater has an input rating greater than 75,000 Btu/hr, it still qualifies as a standard water heater because it is a storage gas heater of 50 gallons or less. The system still qualifies as a standard water heating system because it meets all of the stated requirements. No water heating calculations are required, and the system complies automatically.

5.3.3 Systems Serving Multiple Dwelling Units

To meet the prescriptive requirements, water heaters that serve multiple dwelling units must be gas, oil or propane central recirculating system. Any number of water heaters may be used and any size may be used as long as they are equipped with timer controls and meet the mandatory measure minimum efficiency requirements of §111 or §113.

Recirculating systems may be used as long as they have controls to turn off the pumps when hot water is not needed (e.g., timer controls). Pipes must be insulated as described earlier under mandatory requirements.

Any system not meeting these prescriptive requirements must instead meet the water heating performance budget as described in §151(b)1, or must follow the performance compliance method for the building as a whole In this case, it is

important to note a change in the ACM calculations for 2005. Previously, the performance baseline was an individual water heater for each unit in a multifamily building, regardless of the proposed system configuration. In the 2005 standards, the baseline is a central water heating system whenever the proposed system serves multiple dwelling units. The result of this change is that the water heating budget will turn out to be more stringent than in the past for systems serving multiple dwellings.

Example 5-9

Question

A 10-unit multifamily building has separate gas water heaters for each dwelling unit. Five units have 30-gallon water heaters, and five units have 50-gallon water heaters. Does this comply?

Answer

Water heating calculations are not required if each system is non-recirculating and each water heater has a 0.58 or higher EF, because each dwelling unit has a standard water heating system.

Example 5-10

Question

We are building an 8-unit, 7,800 ft^2 multifamily building with a 200 gallon storage gas water heater with a time and temperature controlled recirculation system that has R-4 insulation on all the piping. The system serves all the units. Do I have to perform calculations to show compliance?

Answer

Water heating calculations are not needed because this system meets all the requirements of Section 151(f)8.

Example 5-11

Question

We are building a 10-unit apartment building with a single large water heater. We do not plan to install a recirculation pump and loop. Does this meet the Prescriptive requirements?

Answer

No. Since it is unlikely that a non-recirculating system will satisfactorily supply hot water to meet the tenants' needs, a recirculating system must be installed to meet the Prescriptive requirements. There is an exception for multifamily buildings of six units or less using the performance approach. For central hot water systems serving six or fewer dwelling units which have (1) less than 25' of distribution piping outdoors; (2) zero distribution piping underground; (3) no recirculation pump; and (4) insulation on distribution piping that meets the requirements of Section 150 (j) of Title 24, Part 6, the distribution system in the Standard Design and Proposed design will both assume a pump with timer controls.

5.4 Compliance Options

5.4.1 Performance Compliance

The computer performance approach can be used to demonstrate compliance for system efficiency, fuel type, system type, distribution system, and auxiliary systems that do not necessarily meet the prescriptive requirements.

5.4.2 Auxiliary Systems

The Water Heating Calculation Method allows water heating credits for solar water heaters and wood stove boilers because these systems save energy by using nondepletable resources as energy sources.

Solar Water Heaters

As noted earlier, solar water heating is a mandatory requirement for State buildings. A solar system (or wood stove boiler) is also required to meet the prescriptive requirements of Package C when an electric resistance water heater is installed. For all other buildings, a water heating credit is available when following the performance compliance path. Credit is available for both passive and active solar water heating systems.

For solar water heating systems, an approved method must be used to determine the Solar Savings Multiplier. Two calculation approaches may be used. To determine the solar contribution of a solar water heating system that has been rated using the SRCC OG 300 procedure, use either form CF-SR which is located in Appendix A, or go to the Commission website at www.energy.ca.gov and download a spreadsheet form. For solar systems that are built up for single or multifamily buildings, a California version of F-chart is available at www.energy.ca.gov in the building standards area of the website.

Mandatory requirements for pipe insulation and storage tank insulation apply as described earlier in this chapter.

Wood Stove Boilers

Wood stoves equipped with heat exchangers for heating domestic hot water can receive credit through the water heating performance calculation method. The savings range from zero (no credit) up to 30% depending on the climate zone and whether or not the system uses a circulation pump.

To receive the compliance credit, the following criteria must be met:

- The building department having jurisdiction has determined that natural gas is not available.
- A tempering valve must be installed at the outlet of the water heater to prevent scalding.
- A pressure-temperature relief valve must be installed at the wood stove.

- The wood stove boiler must be properly sized to minimize the amount of excess hot water produced by the unit.
- All health and safety codes, including codes applying to pressurized boiler vessels, must be met.
- To calculate credits for wood boilers, use the performance method.

5.4.3 Combined Hydronic

Combined hydronic space heating systems serve two functions, providing both space heating and domestic hot water. The system is analyzed for its water heating performance as if the space heating function were separate. Chapter 4 provides an explanation of combined hydronic systems.

5.4.4 Distribution System Options

There are two distribution system alternatives (Point of Use and Pipe Insulation, (see Section 4.6.2, Distribution Systems) that are more efficient than the standard system, and credit is available through the performance compliance approach.

For systems serving individual dwelling units, the standard distribution meets mandatory pipe insulation requirements and also has pipe insulation on the line to the kitchen greater than or equal to ¾ in. diameter when using prescriptive compliance. Credit is available for insulating all hot water piping or for a point of use distribution system.

For systems serving multiple dwelling units with a recirculating pump, extra credit is available for additional insulation, as well as for having all the piping inside the building envelope. The standard system is assumed to have R-4 insulation on piping up to 2 in., R-6 insulation on piping over 2 in. in diameter, no piping underground, and only 5% of the piping outside.

Example 5-12

Question

Can I get pipe insulation credit for a recirculating water-heating system?

Answer

Not for systems serving a single dwelling unit. Recirculating water heating systems have a mandatory insulation requirement for the recirculating section of the hot water pipes. Pipes less than 2 in. must be insulated to R-4 and pipes greater than 2 in. need R-6 insulation. For systems serving multiple dwelling units, using R-6 where R-4 is required, and R-8 where R-6 is required, results in credit within the performance approach. All the circulation loop pipes in one location type (e.g., inside, outside, underground) must be insulated to the higher level to qualify.

5.5 Compliance and Enforcement

Chapter 2 addresses the compliance and enforcement process in a general manner and discusses the roles and responsibilities of each of the major parties, the compliance forms, and the process for field verification and/or diagnostic testing. This section highlights some of the compliance and enforcement issues for the water heating system.

5.5.1 Design

The initial compliance documentation consists of the Certificate of Compliance (CF-1R) and the mandatory measures checklist (MF-1R). These documents are included on the plans and specifications. The CF-1R has a section where special features are listed. The following are water heating features that should be listed in this section if they exist in the proposed design:

- Any system type other than one water heater per dwelling unit
- Non NAECA large water heater performance
- Indirect water heater performance
- Instantaneous gas performance
- Distribution systems
- Solar system
- Wood stove boiler
- Combined hydronic system
- Any multifamily building with a central water heating and distribution system where some dwelling units are served by an individual water heater.

5.5.2 Construction

During the construction process, the contractor and/or the specialty contractors complete the necessary sections of the Installation Certificate (CF-6R). For water heating there is only one section to be completed where information about the installed water heating system is entered.

Inspectors should check that the number and types of water heater systems installed, as indicated on the CF-6R, corresponds to the approved CF-1R. The distribution system is also significant and must correspond to plan specifications. For example:

- If a recirculation system is installed, verify that it was accounted for in the compliance documentation (CF-1R) and check for any required controls (e.g., demand pump, timer).
- If the water heating systems serves more than one dwelling unit, verify the total length of the distribution loop, the

approximate length of the loop in each of the three location types (inside, outside, underground), and the amount of insulation on the piping in each.

- If a point of use credit is specified, the water heater must be no further than 8 ft from all hot water outlets (excluding washing machines).
- Verify that the make and model number of the installed water heater unit matches that listed on the Installation Certificate (CF-6R).
- Verify installation of a timer control or a time and temperature control on a multifamily building with central water heating and recirculating system.

For most central water heating distribution systems in multifamily buildings, any distribution systems for supplying hot water from a central boiler or water heater should be assumed to have a recirculation pump and assume that one would be supplied retroactively if not initially.

For central hot water systems serving six or fewer dwelling units that have:

- less than 25 ft of distribution piping outdoors;
- zero distribution piping underground;
- no recirculation pump; and
- insulation on distribution piping that meets the requirements of §150 (j) of the standards, a pump and timer are not required to be installed. When calculating the energy use of these multifamily distribution systems, the distribution system in the Standard Design and Proposed design will both be assumed to have a pump with timer controls even when one is not installed.

5.5.3 Field Verification and/or Diagnostic Testing

The only element of a water heating system that requires field verification is where insulation credit is taken for hot water pipes located in the attic and buried by ceiling insulation. In this case, a HERS rater must verify that the Insulation Installation Quality requirements are met and indicate compliance on the Certificate of Field Verification and Diagnostic Testing (CF-4R)
Glossary/Reference

5.6 Glossary/Reference

Relevant terms are defined in Joint Appendix I.

The following are terms that are either not defined in Joint Appendix I or expansions to the Appendix I definitions.

External Tank Insulation

Insulation that is applied to the exterior of storage type water heater tanks. When installed, water heater insulation should be applied to completely cover the exterior sides of water heaters, but should not conceal controls or access ports to burners, cover combustion air openings, or interfere in any way with safe water heater operation. Insulation of top and bottom surfaces is not necessary.

Recovery Energy

Recovery energy is the energy used to heat water, including the inefficiency (or efficiency loss) of the heater.

Recovery Load

Recovery load is the amount of energy in hot water that the water heater needs to provide. It includes only the energy in the hot water that is used by the building occupant and the distribution losses.

Thermal Efficiency

Thermal efficiency is defined in the Appliance Standards as a measure of the percentage of heat from the combustion of gas or oil that is transferred to the hot water as determined using the applicable test methods.

5.6.1 Water Heater Types

Storage Gas

A gas water heater designed to heat and store water at less than 180°F. Water temperature is controlled with a thermostat. Storage gas water heaters have a manufacturer's specified storage capacity of at least two gallons and less than 75,000 Btu/h input.

Large Storage Gas

A storage gas water heater with greater than 75,000 Btuh input.

Storage Electric

An electric water heater designed to heat and store water at less than 180°F. Water temperature is controlled with a thermostat. Storage electric water heaters have a manufacturer's specified storage capacity of at least two gallons.

Storage Heat Pump

An electric water heater that uses a compressor to transfer thermal energy from one temperature level to a higher temperature level for the purpose of heating water. It includes all necessary auxiliary equipment such as fans, storage tanks,

pumps or controls. EFs for heat pump water heaters are found in the Energy Commission's Appliance Database under Certified Water Heaters.

Instantaneous Gas

A gas water heater controlled manually or automatically by a water flow activated control or a combination of water flow and thermostatic controls, with a manufacturer's specified storage capacity of less than two gallons.

Instantaneous Electric

An electric water heater controlled automatically by a thermostat, with a manufacturer's specified storage capacity of less than two gallons.

Note: Instantaneous water heaters are not generally designed for use with solar water heating systems or as heat sources for indirect fired water heaters. They are also typically inappropriate for use with recirculation systems. Consult manufacturer's literature when considering these applications.

Indirect Gas

A water heater consisting of a storage tank with no heating elements or combustion devices, connected via piping and recirculating pump to a heat source consisting of a gas or oil fired boiler, or instantaneous gas water heater (see note following the definitions of Instantaneous Gas and Electric).

As described above in the section on Mandatory Requirements, the storage tank must be insulated in accordance with §150(j)1B of the standards, which requires a factory-installed minimum of R-16 (labeled on outside of tank) or a minimum of R-12 external insulation.

The piping connecting the heating source and the storage tank must also meet the mandatory requirements, typically one in. of R-4 insulation. This includes any piping located in concrete slabs or underground.

5.6.2 Distribution Systems

The water heating distribution system is the configuration of piping, pumps and controls that regulates delivery of hot water from the water heater to all end uses within the building. The water heating calculation method gives credits for energy-efficient distribution systems, while taking penalties for less energy-efficient systems.

All criteria listed below are based on *Residential Water Heating Study*: March 31, 1991, Energy Commission contract #400-88-003.

Standard Distribution System

Systems Serving Single Dwelling Units

A standard distribution system serving a single dwelling unit that does not incorporate a pump for recirculation of hot water, and does not take credit for

any design features eligible for energy credits. As per the prescriptive requirements, all pipes running to the kitchen that are ¾ in. or larger must be insulated.

Installation Criteria:

No pumps may be used to recirculate hot water. The first 5 ft of hot and cold water piping adjacent to the water heater must be insulated according to mandatory requirements.

Systems Serving Multiple Dwelling Units

The standard distribution system for water heaters serving multiple dwelling units incorporates a recirculation pump, controls to shut the pump off when it is not needed, and insulation on all portions of the recirculation loop. As required by the prescriptive approach, the piping to the kitchen must also be insulated.

Standard Pipes with No Insulation

This case is the same as the standard distribution system above, except that the lines of ¾ in. or larger to the kitchen are not insulated.

Point of Use

A distribution piping system that limits hot water distribution system heat loss by minimizing the distance between the water heater and fixtures using hot water. This credit is not applicable to systems serving multiple dwelling units.

Installation Criteria:

The distance between the water heater and any fixture using hot water cannot exceed 8 ft, measured in plan view (see Figure 5-2).

All water heaters and hot water fixtures must be shown on plans submitted for local building department plan check.

EXCEPTION: Washing machines for clothing may be located more than eight ft from the water heater.

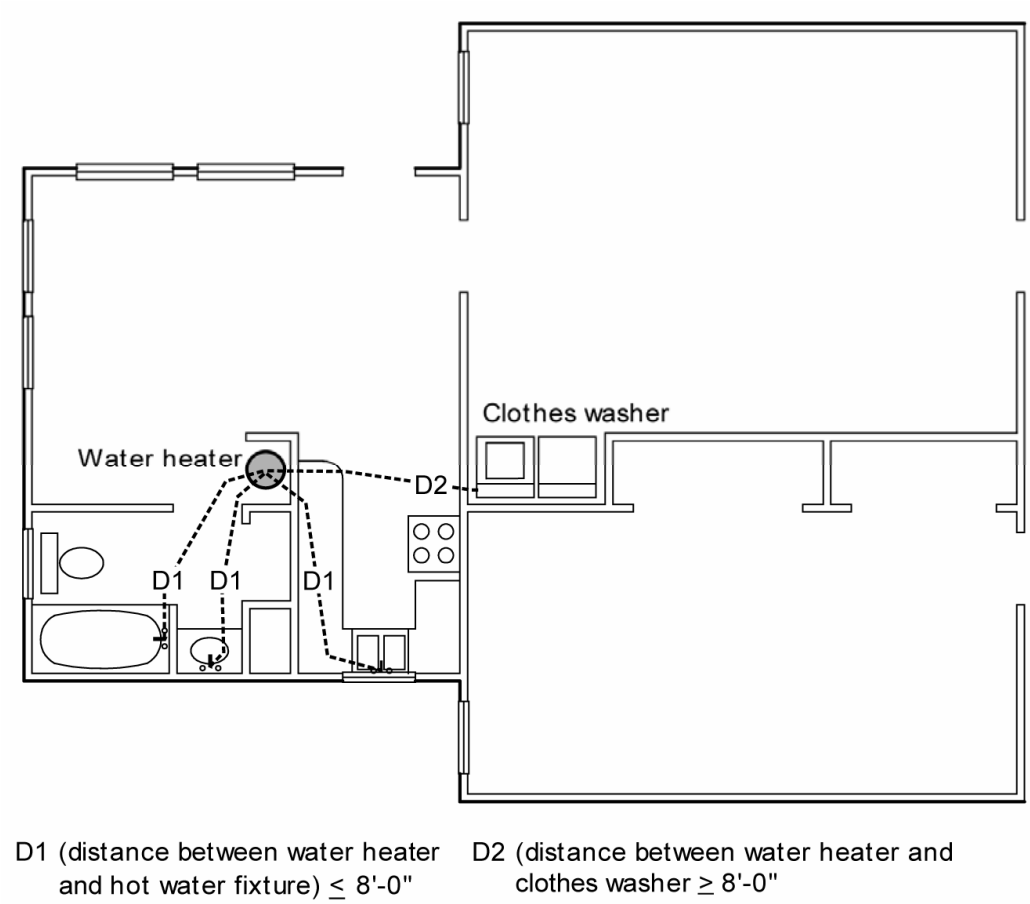

Figure 5-2 – Point of Use Distribution System

Pipe Insulation

Credit is available for insulation of hot water pipes in addition to insulation required by the mandatory requirements. For systems serving a single dwelling unit, this credit applies only to non-circulating systems. For systems serving multiple dwelling units, there is a pipe insulation credit for recirculating piping external to dwelling units if pipes are insulated to a higher R-value than the mandatory minimum.

Installation Criteria (Single Dwelling Unit):

Insulation must meet the level required in the mandatory requirements. Note that pipes buried under ceiling insulation can meet the mandatory requirements.

Note: Heat tape – electric resistance heating tape wrapped around hot water pipes – may be used only for freeze protection and cannot be used instead of mandatory pipe insulation (see Section §150(j)) or pipe insulation receiving distribution credit.

Installation Criteria (Multiple Dwelling Units):

All piping in the same location type (inside, outside, or underground) must be insulated to at least R-6 for pipes up to 2 in. in diameter, or R-8 for pipes larger than 2 in. in diameter.

Pipe insulation for piping located underground or in a slab must be protected by a material that is resistant to compression and crushing so that the insulation value is maintained after installation of covering materials.

Parallel Piping

A parallel piping system limits the amount of heat loss and water lost from the distribution piping by minimizing the volume of hot water left in the pipes at the end of each water draw.

Credit for Parallel Piping can only be used if each hot water use location (each kitchen, each bathroom and each laundry area) has a separate distribution line with a maximum size of half-inch pipe run from the location of the water heater to each hot water use location. This credit does not apply to systems serving multiple dwelling units.

Installation Criteria:

Adequate distribution piping must be supplied to meet the demand at each hot water use location as required by the plumbing code. No piping over one-half in. may be used with the exception of a manifold located within eight ft of the water heater to which the half-inch piping runs are connected. See ACM RG-2005 for detailed criteria.

All water heaters, distribution line runs and fixture points must be shown on the plans.

Recirculation System – No Control

A continuous distribution system using a pump to recirculate hot water to branch piping though a looped hot water main with no control of the pump, such that the pumping is continuous.

Installation Criteria:

All piping used to recirculate hot water must be insulated to meet the mandatory requirements. This includes any recirculating piping located in concrete slabs or underground. Since the standards require this insulation, it is not eligible for the Pipe Insulation credit. For systems serving a single dwelling unit, the recirculating loop within a dwelling unit must be laid out to be within 8 ft of all hot water fixtures served by the recirculating loop.

Recirculation System –Temperature Control

Recirculation system that uses temperature controls to cycle pump operation to maintain circulated water temperatures within certain limits.

Installation Criteria:

All criteria listed for continuous recirculation systems apply.

An automatic thermostatic control must be installed to cycle the pump on and off in response to the temperature of water returning to the water heater through the recirculation piping. Minimum differential or "deadband" of the control shall not be less than 20°F. An alternate temperature control system adjusts the boiler controls so that the temperature of the hot water that is circulated during times of low draw is at least 20º lower than the standard set point. In this case, the pump may run continuously.

Plans must indicate pump and temperature control.

Recirculation System – Timer Control

A recirculation system that uses a timer control to cycle pump operation based on time of day.

Installation Criteria:

All criteria listed for continuous recirculation systems apply.

A timer must be permanently installed to regulate pump operation. Timer setting must permit the pump to be cycled off for at least eight hours per day.

Plans must indicate pump and timer control.

Recirculation System –Timer and Temperature Control

A recirculation system that uses both temperature and timer controls to regulate pump operation, so that the pump is off when the water temperature is high enough even when the timer would have the pump on.

Installation Criteria:

All criteria listed for continuous, temperature controlled, and timer controlled recirculation systems apply.

Recirculation System – Demand Control

Recirculation system that uses brief pump operation to recirculate hot water to fixtures on demand.

Installation Criteria:

All criteria listed for continuous recirculation systems apply.

Pump start-up must be provided by a push button, occupancy sensor or flow switch.

Pump shut-off must be provided by either a temperature sensing device that shuts off the pump when hot water reaches the location of use, or by a timer which limits pump run time to two minutes or less.

For a system serving a single dwelling, at a minimum, push buttons and sensors must be located in the kitchen and master bathroom.

Plans must include a wiring/circuit diagram for the pump and timer/temperature sensing device.

Recirculation systems are not used with instantaneous water heaters.

6. Lighting

6.1 Overview

6.1.1 Introduction and Scope

This chapter is a one-stop place where a builder, contractor, or lighting designer can get the information they need about residential lighting in low-rise buildings and in the dwelling units of high-rise buildings.

For residential buildings, all of the lighting requirements are mandatory measures. Therefore, lighting energy is not part of the energy budget for the whole building performance method, except as part of the standard assumption on internal heat gains that is assumed to be the same for all buildings. There are no tradeoffs between lighting and other building features.

The lighting requirements apply to alterations and additions (including replacements) as well as newly-constructed buildings. All new luminaires that are permanently installed must be high efficacy, but existing luminaires may stay in place.

The Standards apply only to permanently installed luminaires (i.e., plug-in luminaires are not required to meet these requirements).

6.1.2 What's New for 2005

The lighting requirements have been simplified and expanded for the 2005 update of the Standards with particular emphasis on efficiency measures that are easily inspected and verified by building inspectors on the job site. The concepts of "general lighting" and "task lighting" have been eliminated as a basis for code compliance.

The most dramatic change since the previous Standards is that high efficacy luminaires are required for almost all rooms in residential buildings. Exceptions are made in kitchens for a limited percentage of watts if the luminaires are on a separate circuit, or in other specified rooms if the luminaires are controlled by occupant sensors or dimmers[7]. In addition, trade-offs between the high efficacy requirement in specific rooms is removed, and all exterior luminaires attached to a building are required to be either high efficacy luminaires or controlled by both a photocontrol and motion sensor as well. The specific language for these requirements can be found in §150(k) of the proposed 2005 Standards.

[7] A manual-on occupant sensor turns lighting off automatically when no one is present. When lighting is needed it must be turned on manually with a switch.

The requirements apply only to permanently installed luminaires, i.e., luminaires that are part of the house, as opposed to portable luminaires such as torchieres or table lamps that are provided by the occupant. Permanently installed luminaires include ceiling luminaires, chandeliers, vanity lamps, wall sconces and any other type of luminaire that is a permanent part of the house.

The new requirements may be summarized as follows:

- Kitchens. At least half the installed wattage of luminaires in kitchens shall be high efficacy and the ones that are not must be switched separately.
- Lighting in Bathrooms, Garages, Laundry Rooms and Utility Rooms. All luminaires shall either be high efficacy or shall be controlled by an occupant sensor.
- Other Rooms. All luminaires shall either be high efficacy or shall be controlled by an occupant sensor or dimmer. Closet that are less than 70 square foot are exempt from this requirements.
- Outdoor Lighting. All luminaires mounted to the building or to other buildings on the same lot shall be high efficacy luminaires or shall be controlled by a photocontrol/motion sensor combination.
- Common Areas of Multifamily Buildings. All luminaires in the common areas of multifamily buildings shall either be high efficacy or shall be controlled by an occupant sensor.

Luminaires that are recessed into insulated ceilings are required to be rated for insulation contact ("IC-rated") so that insulation can be placed over them. The housing of the luminaire shall be airtight to prevent conditioned air escaping into the ceiling cavity or attic, unconditioned air infiltrating from the ceiling or attic into the conditioned space.

An additional set of requirements apply to parking lots or garages with space for eight or more cars, which are typically for multifamily buildings. The nonresidential Standards for parking lots and/or garages apply in these cases (§132, §147).

6.1.3 Related Documents

There are a number of publications and documents available from the California Energy Commission and others that provide additional information about residential lighting. A summary of these is listed below:

- The Nonresidential Manual should be consulted for more details on the requirements for parking lots and parking garages.
- The Advanced Lighting Guidelines, available from the New Buildings Institute (http://www.newbuildings.org) is an informative resource for energy efficient lighting design, luminaires, and controls. While the document is mostly oriented for nonresidential lighting applications, it has generic information

about lamps, ballasts, luminaires, and controls that is applicable to low-rise residential buildings.

- Professionally qualified lighting designers can be quickly located via the website of the International Association of Lighting Designers (http://www.iald.org/index). Many designers are ready to offer informal advice as well as undertake commissioned work.
- Many books on residential lighting design are available. The best books explain the principles of good lighting design as well as showing examples of luminaires. The fast pace of lamp development makes recently written books much more useful.
- Guidance on the selection and use of lighting technologies is available from the Lighting Research Center's National Lighting Product Information Program, at www.lrc.rpi.edu/programs/nlpip. Additional resources for energy efficient lighting and other building systems are available from the California Building Industry Institute at http://www.thebii.org.

6.2 High Efficacy Luminaires

A luminaire is the lighting industry's term for light fixture. A luminaire consists of the housing, power supply (ballast), lamp, reflector, and in some cases a lens. A lamp is the lighting industry's term for a light bulb. Luminaires can be designed to be recessed into the ceiling, suspended by a rod or chain, or surface mounted on the wall or ceiling.

A high efficacy luminaire is one that contains only high efficacy lamps and must not contain a conventional (medium) screw-based socket. Typically, high efficacy luminaires contain, pin-based sockets, like compact or linear fluorescent lamp sockets, though other types such as screw sockets specifically rated for high intensity discharge lamps (like metal halide lamps) may also be eligible for exterior use. Luminaires with modular components that allow conversion between screw-based and pin-based sockets without changing the luminaire housing or wiring shall not be considered high efficacy luminaires. These requirements prevent low efficacy lamps being retrofitted in high efficacy luminaires. Also, compact fluorescent luminaires with permanently installed ballasts that are capable of operating a range of lamp wattages, the highest operating input wattage of the rated lamp/ballast combination must be use for determining the luminaire wattage.

There are two qualifying requirements for a high efficacy luminaire: that the lumens per watt for the lamp be above a specified threshold and that electronic ballasts be used in certain applications.

6.2.1 Lumens per Watt

The lumen is the unit of visible light. To be rated as high efficacy, a lamp must produce a certain number of lumens for each watt of electrical power it consumes. Efficacy is therefore measured in lumens per watt.

Almost all fluorescent lamps equipped with electronic ballasts qualify as high efficacy light sources; incandescent lamps (including any screw-in incandescent lamps, like regular 'A' or reflector lamps, or quartz halogen lamps, or low voltage lamps, like halogen MR lamps) do not. To be classified as high efficacy, a lamp must meet the requirements listed in Table 6-1 (documented in Table 150-C of the Standards):

For simplicity, the power used by the ballast is ignored when determining the lumens per watt for purposes of compliance with the residential lighting requirements.

Table 6-1 – High Efficacy Lamps

Lamp power	Required lamp efficacy
< 15 W	40 lm/W
15-40 W	50 lm/W
>40 W	60 lm/W
Note: the wattage of the ballast is not included when determining lamp efficacy.	

Mercury vapor lamps do not usually meet the requirements; metal halide or compact fluorescent lamps (CFLs) are good replacements. For other lamp types such as LEDs you should check with the lamp manufacturer and provide documents showing that the lamp meets the requirements.

To calculate the efficacy of a lamp, find out from the manufacturer how many lumens it produces, then divide this number by the rated wattage of the lamp. Do not include any watts consumed by the ballast.

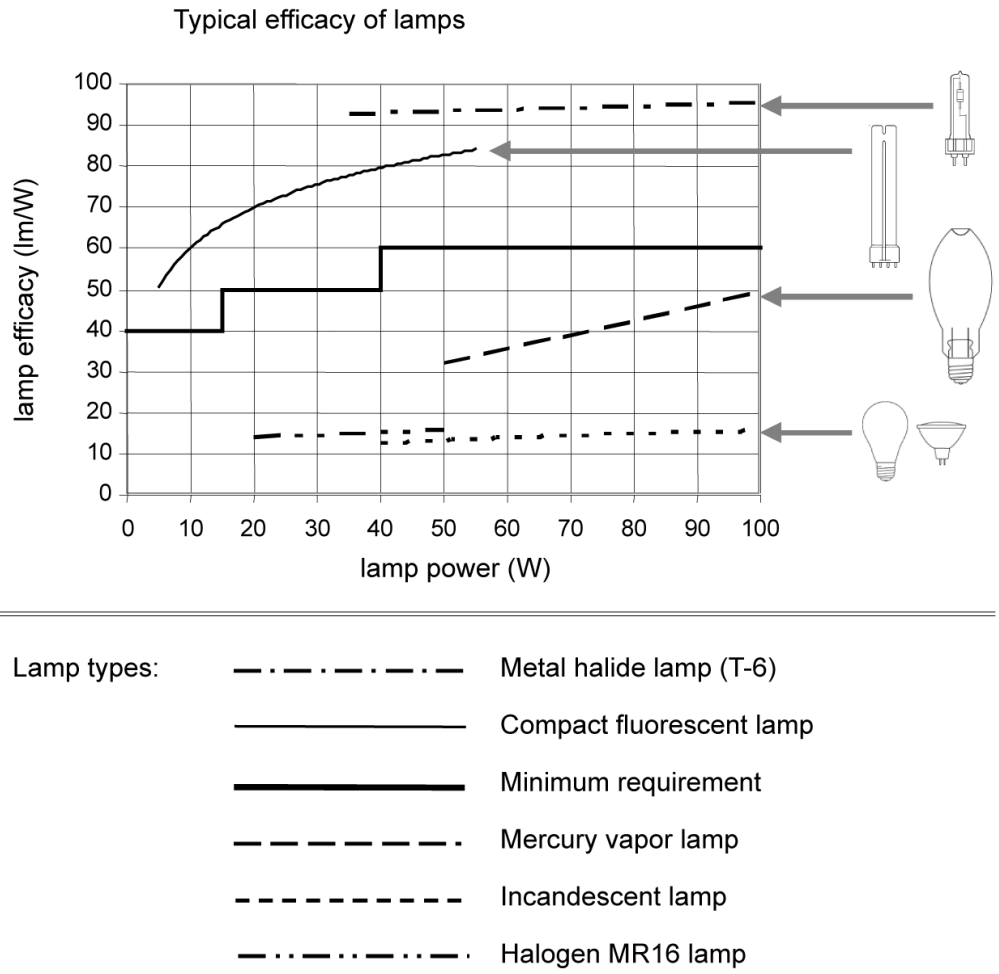

Figure 6-1 – Typical Lamp Efficacies

6.2.2 Electronic Ballasts

Additionally, fluorescent lamps with a power rating of 13 W or more shall have an electronic ballast that operates the lamp at a frequency of 20 kHz or more. All commonly available electronic ballasts meet this requirement. Outdoor luminaires with high intensity discharge (HID) lamps (like metal halide or high-pressure sodium) containing hardwired electromagnetic HID ballasts with HID rated medium base sockets and lamps meeting the minimum efficacy requirements in Table 6-1 are considered high efficacy.

At the present time, pin based compact fluorescent lamps that are operated with electronic ballasts typically have four-pin lamp holders. Pin-based compact fluorescent lamps with two-pin lamp holders typically will indicate that the ballast is magnetic. However, there are new compact fluorescent lamp holders being considered by the lighting industry.

6.2.3 Permanently Installed Luminaires

The Standards require that all permanently installed luminaires be high efficacy as defined by the Standards, with some exceptions described later in this chapter. Permanently installed luminaires include, but are not limited to those luminaires installed in, on, or hanging from the ceilings or walls (including ceiling fan lights); in or on built-in cabinets (including kitchen, nook, wet bar, and other built-in cabinets); and those mounted to the outside of the buildings. Permanently installed luminaires do not include lighting that is installed in appliances by the manufacturers including refrigerators, stoves, microwave ovens, or exhaust hoods.

6.3 Kitchens

§150(k)2.

The Standards define a residential kitchen to be “a room or area used for food storage and preparation and washing dishes including associated counter tops and cabinets, refrigerator, stove, oven, and floor areas.” The definition goes on to say, “Adjacent areas are considered kitchen if the lighting for the adjacent areas is on the same switch as the lighting for the kitchen”.

The intent of the kitchen lighting Standard is to insure the builder provides the occupant with energy efficient lighting. The permanently installed lighting should provide sufficient light levels for basic kitchen tasks without the need for augmenting with portable (plug-in) lighting.

A design recommendation may be to utilize the Illuminating Engineering Society of North America (IESNA) guidelines that at least 30 footcandles of light be provided for seeing tasks in kitchens. Seeing tasks include, but are not limited to, the basic kitchen tasks as preparing meals and washing dishes. These tasks typically occur on accessible kitchen countertops, the tops of ranges and in sinks, where food preparation, recipe reading, cooking, cleaning and related meal preparation activities take place, as well as at the front of kitchen cabinets so that the contents of the cabinet are discernable. Although the design should achieve 30 footcandles on most counter-height, horizontal work surfaces, there may be a few work surfaces where the lighting levels fall below this value and the fronts of kitchen cabinets may also be below this value. Even in these locations, the lighting level provided should not fall below the IESNA-recommended lower value for non-critical seeing tasks of 20 footcandles. Parts of counters that are not work surfaces, such as a corner underneath a cabinet, may have a lighting level below 20 footcandles and still meet the requirements of the standard, because meal preparation is unlikely to occur in those areas.

The Standards require that at least half the lighting watts in a kitchen must be consumed by high efficacy luminaires (remember that low-voltage halogen MR lamps do not count as high efficacy). Because high efficacy luminaires typically consume less power than other luminaires, about three-fourths of the luminaires in the kitchen are likely to be high efficacy. See Form WS-5R, Residential Kitchen Lighting Worksheet, Appendix A, which is completed to determine if kitchen lighting complies with the Standards.

High-efficacy fixtures and non-high efficacy fixtures are required to be switched separately. Our recommendation is to also separately switch different layers of the kitchen lighting. Each layer that can serve a unique function should have the ability to operate independent.

The following are some examples of layers that code allows to be switched together but are recommended to be switched separately:

- Recessed Downlights
- Linear fluorescent luminaires mounted on the ceiling.
- Under-cabinet lighting.

Under-cabinet lighting using 14W and 28W T5 linear fluorescent lamps
Source: www.gelighting.com

Figure 6-2 – Kitchen Work Surface Lighting

- In uplights (mounted on walls or on top of cabinets). Uplights are effective at making rooms less gloomy, so if an uplight is provided people may choose not to switch on the other lights in the room.

Non-high efficacy luminaires must be switched on a separate circuit from the high efficacy luminaires. These could include low-voltage halogen MR lamps or reflector lamps used to provide decorative spotlighting.

Lighting in areas adjacent to the kitchen, such as dining and nook areas and even family rooms, is considered to be kitchen lighting if it is not separately switched from the kitchen lighting. The switches may be mounted on the same faceplate, but as long as the lights can be switched independently, these areas do not count as being in the kitchen.

Recessed cans with 18W CFLs light specific task areas

Wall-mounted uplighters using 32W CFLs increase the sense of space

Figure 6-3 – General Kitchen Lighting

For incandescent luminaires including, but not limited to those with medium screw base sockets that can accept lamps of many different types and wattages, the wattage of the luminaire used in calculations and shown on the building plans is to be its maximum rated relamping wattage as marked on the luminaire, on a permanent factory-installed label. For luminaires with modular components that allow conversion between screw-based and pin-based sockets without changing the luminaire housing or wiring, it shall be assumed that an incandescent lamp of the maximum relamping wattage available for that system will be used. For compact fluorescent luminaires with permanently installed ballasts that are capable of operating a range of lamp wattages, the highest

operating input wattage of the rated lamp/ballast combination must be use for determining the luminaire wattage. For low voltage track lighting, use the rated wattage of the transformer listed on a permanent factory-installed label. For line voltage track lighting, use the volt-ampere rating of the branch circuit feeding the track, or the volt-ampere of a current limiter integral to the track if there is one, or the higher of the rated wattage, as listed on a permanent factory-installed label, of all the luminaires installed, or 45W per ft of track.

All other miscellaneous lighting equipment not addressed in §130 (c) 1 through 4, shall be the maximum rated wattage (for incandescent lamps) of the lighting equipment, or operating input wattage (for miscellaneous lighting systems with ballasts or transformers), as listed on a permanent factory-installed label, or published in manufacturer's catalogs, based on independent testing lab reports as specified by UL 1574 or UL 1598.

The wattage of the lamp as actually installed or as marked on the building plans shall not be used to determine if compliance has been met at site inspection. Compliance shall be determined by verifying that the wattage marked on the luminaires is consistent with the wattage used to determine compliance.

Example 6-1

Question

I am using an incandescent luminaire over the sink that is capable of housing a 150-watt lamp. I plan to install a 26-watt compact fluorescent lamp in the socket. Does this qualify as a high efficacy luminaire and what wattage should I use in determining if half the lighting power in the kitchen is high efficacy?

Answer

The luminaire does not count as high efficacy because it is capable of being lamped with an incandescent lamp. Use the maximum rated power (150 W) for determining the percent of high efficacy lighting.

Example 6-2

Question

If I use track lighting in a kitchen, how do I calculate the power?

Answer

See §130(c). For line voltage track, use the maximum relamping wattage of all of the installed luminaires as listed on permanent factory-installed labels, or 45 watts per linear foot of track, whichever is larger. An alternate method is to calculate the power based on the volt-ampere rating of the branch circuit feeding the track, or the volt-ampere of a current limiter integral to the track. For low-voltage tracks, use the rated watts of the transformer as listed on a permanent factory-installed label.

Example 6-3

Question

I am doing minor renovations to my kitchen that has six recessed incandescent cans and I am adding a new luminaire over the sink. Does this luminaire have to be a high efficacy luminaire?

Answer

Yes, all new luminaires must be high efficacy until at least 50% of the total lighting wattage comes from high efficacy luminaires (§152 (b) 1 and §152 (b) 2).

Example 6-4

Question

I am completely remodeling my kitchen and putting in an entirely new lighting system. How do the Standards apply to this case?

Answer

At least half the lighting watts must be high efficacy luminaires. This is treated like new construction.

Example 6-5

Question

Where does the kitchen lighting stop and the other lighting begin in the case of a large family room with the kitchen on just one side of an approximately 24-ft by 24-ft room. Is the kitchen nook part of the kitchen? Lighting over the eating counter? Lighting in an adjacent pantry?

Answer

Lighting over food preparation areas is kitchen lighting, including areas used for cooking, food storage and preparation and washing dishes, including associated countertops and cabinets, refrigerator, stove, oven, and floor areas. Any other lighting on the same switch is also kitchen lighting, whether or not the luminaires are in the kitchen area. Lighting for areas not specifically included in the definition of a kitchen, like the nook or the family room, is not kitchen lighting, as long as it is switched separately.

Example 6-6

Question

I am installing an extraction hood over my stove, it has lamps within it. Do these lamps have to be high efficacy?

Answer

This lighting is part of an appliance, and therefore does not have to meet the Standards for permanently installed lighting. This lighting is ignored in determining if half the kitchen lighting is high efficacy.

Example 6-7

Question

Am I still required to control the general lighting by a switch on a readily accessible lighting control panel at an entrance to the Kitchen as required in the 2001 and earlier versions of the Standards?

Answer

No. In the 2005 Standards there are no constraints on where the control for high efficacy Kitchen lighting is located, only that the high efficacy lighting must be switched separately from the low efficacy lighting.

6.4 Bathrooms, Garages, Laundry Rooms and Utility Rooms

§150(k)3

Lighting in bathrooms, garages, laundry rooms and/or utility rooms must be high efficacy, or must be controlled by a manual-on occupant sensor.

A bathroom is a room containing a shower, tub, toilet, or a sink that is used for personal hygiene.

If a sink used for personal hygiene is in a room other than a bathroom, such as bedroom, where no doors, walls, or other partitions separate the sink area from the rest of the room, and the lighting for the sink area is switched separately from room area lighting, only the luminaire(s) that are lighting the sink area must meet the bathroom lighting requirements. In this case, lighting of the sink area includes lighting of associated counters, cabinets, and mirrors.

More than one circuit of luminaires may be attached to the same manual-on occupant sensor. At least one high-efficacy luminaire should be installed so that it can be left off the occupant sensor circuit to ensure that all of the luminaires don't switch off while someone is in the bath. Even dual technology sensors may not detect a motionless and silent occupant.

Garages, laundry rooms and utility rooms can be lit entirely by high efficacy lighting. Linear fluorescent luminaires are typically between 1.5 and 4 times as efficient as CFLs, and should be used unless there is insufficient space. Luminaires should be mounted close to washer/dryer hookups and over work surfaces to ensure shadow-free illumination.

Garages present an opportunity to reduce energy use by providing task lighting. The end of the garage furthest from the door to the house is often used as a work area, and can be provided with high efficacy luminaires switched separately from the rest of the space.

Although not required, occupant sensors can be used in conjunction with high efficacy lighting to achieve the lowest possible energy use.If there are any concerns about safely using occupant sensors in conjunction with low-efficacy luminaires in a space, consider the following two options:

- In addition to the low efficacy luminaires controlled by a manual-on occupant sensor, leave one high efficacy luminaire on a separate manual switch.
- Install all high efficacy luminaires in the space; high efficacy luminaires do not require an occupant sensor to meet the requirements of the Standards.

Example 6-8

Question

What types of occupant sensors qualify for controlling low efficacy lights in bathrooms, garages and utility rooms?

Answer

Eligible occupant sensors are those that do not allow the luminaire to be turned on automatically and do not have an override that allows it to remain on.

Sensors including microwave, ultrasonic and passive infra-red (PIR) must comply with section 119 (d)

Example 6-9

Question

Is it good lighting practice to have all the lighting in a room controlled by a single occupant sensor?

Answer

Occupant sensors may fail to detect people who aren't making large movements, and their sensitivity is reduced in hot environments. Occupant sensors may cause the lights to switch off while someone is using a hazardous device. Where safety is an issue, high efficacy luminaires should be installed. High efficacy luminaires do not require an occupant sensor to meet the Standards.

Example 6-10

Question

Is the factory installed lighting system in a bathroom mounted medicine cabinet required to be either high-efficacy or controlled by a manual-on occupant sensor?

Answer

If the factory installed lighting in a medicine cabinet is designed to only illuminate the inside of the medicine cabinet, and the lighting is controlled only by a door activated switch where the lights turn off automatically when the cabinet door is closed, then the factory installed lighting is not regulated by the Standards. However, if the factory installed lighting is connected to a manually operated switch that can be turned on regardless of the position of the cabinet door, and/or the lighting is designed to illuminate and/or display the contents of the cabinet when the door is closed, then it is considered permanently installed lighting that must comply with the Standards. Also, any factory installed "bath bar" or other general lighting system is considered permanently installed lighting that must comply with the Standards.

Example 6-11

Question

Is the factory installed lighting in a built-in ironing board device required to be either high-efficacy or controlled by a manual-on occupant sensor when it is installed in a laundry room?

Answer

Yes, if the lighting is permanently wired it must be either high-efficacy or controlled by a manual-on occupant sensor. However, if the lighting plugs directly into an electrical receptacle, it is not regulated by the Standards.

6.5 Other Rooms

§150(k)4

Permanently installed lighting in other rooms must be high efficacy, or a manual-on occupant sensor or a dimmer must control it.

"Other rooms" includes hallways, dining rooms, family rooms and bedrooms – the rooms in which people are most aware of interior design both in terms of fashion and the usability of their living space.

Exception 3 to §150 (k) 4 specifies that permanently installed luminaires that are not high efficacy luminaires can be allowed in closets less than 70 square feet. These luminaires may be controlled by a simple toggle switch, manual-on occupant sensor, or an automatic-on occupant sensor.

Many people commonly add their own portable lighting. Unfortunately, portable lighting often means highly inefficient incandescent floor-standing luminaires that can consume 190 watts or more for older lamps.

Permanently installed lighting should reduce the need for such high wattage portable sources by creating variations of light throughout the room, and by reducing areas of shadow. To achieve this, use several luminaires rather than a single luminaire; wall-mounted uplights are a good choice because they are design-neutral and can be repainted. For high-end properties, linear fluorescent cove lighting and other forms of concealed lighting may increase marketability.

People like to control the appearance of their rooms; providing separate switches for each luminaire will make the space more attractive to tenants and will allow them to reduce their energy use.

Although occupant sensors can be used in living spaces, there are limitations in those living spaces where people are expected to sit still for long periods of time and not move around enough to keep the sensor activated, resulting in lights going off prematurely.

Example 6-12

Question

Can a ceiling fan with integrated lighting be a high efficacy luminaire?

Answer

Yes. Ceiling fans with integral CFL ballasts are available. Occupants are likely to prefer obscured lamps to visible lamps. A less efficient alternative, when the ceiling fan is installed in a room other than a kitchen, bathroom, garage, laundry room and/or utility room, is to use incandescent lamps on a dimming circuit separate to the fan circuit.

Example 6-13

Question

Are high-efficacy spotlights available, to replace halogen MR16s?

Answer

Some CFLs resemble spotlights, and manufacturers may describe them as spotlights, but they produce the same diffuse light as regular CFLs. Metal halide spotlights with 35W T-6 high efficacy lamps are available, and LEDs can be used as spotlights.

6.6 Outdoor Lighting

§150(k)6

Outdoor lighting attached to a building must be high efficacy, or controlled by a motion sensor with integral photocontrol. Motion sensors used in conjunction with outdoor lighting luminaires should have the capability of turning the lights on automatically. Lighting around swimming pools, water features, or other locations subject to Article 680 of the California Electric Code are exempt.

Section 119 (b) requires control devices, including motion sensors and photocontrols, to have an indicator that visibly or audibly informs the operator that the controls are operating properly, or that they have failed or malfunctioned. A light emitting diode (LED) status signal is typically used to meet this requirement. The LED status signal is also practical for use as a commissioning tool. Another option is to use the lamp in the luminaire as the status signal, as long as the lamp fails in the off position. The intention of this requirement is that if the photocell or motions sensor fails the luminaire will not turn on until the control is fixed.

Amalgam CFLs perform better at both very high and very low temperatures than non-amalgam versions, so are appropriate for outdoor lighting, although they can take a few minutes to reach full output. If instant start is important and temperatures may be low, specify a cold-weather-rated ballast. Alternatively, an incandescent source (fitted with a combination photocontrol/motion sensor) may be a good choice.

Decorative landscape lighting that is not permanently attached to buildings is not regulated by the Standards. Even though it is not required by the Standards, using a time clock or photocontrol on outdoor lighting not attached to buildings will help to prevent people accidentally leaving these lights on during the day and reduce energy use.

Example 6-14

Question

Do all residential outdoor luminaires have to be “cutoff” rated, or “flat glass” types?

Answer

Typical residential outdoor lighting does not have to be “cutoff” rated. However, residential parking lots for eight or more vehicles are required to meet the Nonresidential Standards, which do include cutoff requirements for luminaries greater than 175 watts. Even though not required for most residential outdoor lighting, cutoff luminaires are usually more efficient at providing light in the required area, so a lower wattage lamp and ballast can be used. Cutoff luminaires also reduce stray light and glare problems which can be a source of legal dispute between tenants or with neighboring property owners.

Example 6-15

Question

My house has a row of small incandescent bollards along the walk way to the front door. Do these have to be high efficacy?

Answer

No. The high efficacy requirement only applies to lighting mounted to the building.

Example 6-16

Question

I would like to install low-voltage landscape lighting in my yard. Are these required to be on a motion sensor and photocontrol?

Answer

No. Even though low-voltage lighting does not qualify as high efficacy lighting, lighting not attached to a building, like landscape lighting, is exempt from this requirement.

Example 6-17

Question

If I install high efficacy lighting on the exterior of the building, can I then install lighting that is not high efficacy in the bathrooms?

Answer

No, the provisions for "tradeoff" between exterior lighting and certain interior rooms have been eliminated in the 2005 Standards. However, you now have the option of using a manual-on occupant sensor in conjunction with outdoor luminaires that are not high efficacy.

6.7 Parking Lots and Parking Garages

§150(k)7

§132

§147

§148

Parking lots for eight or more cars must meet the nonresidential lighting requirements (see §148). A maximum lighting power of 0.08 W/ft² is permitted if you are in a rural area and 0.15 W/ft² if you are in an urban area, as defined by the U.S. Census. For more details, see the *2005 Nonresidential Manual*.

Parking garages that house eight or more cars shall meet the interior lighting power requirements of the Nonresidential Standards (see §147). A maximum lighting power of 0.4 W/ft² is permitted.

Parking lots and garages for eight or more cars are generally associated with multifamily housing.

For parking lots and parking garages that accommodate eight or more vehicles the following requirements apply:

- Lamps rated over 100W must have a lamp efficacy of at least 60 lumens per watt, or be controlled by a motion sensor;
- Lamps rated over 175 watts shall be designated "cutoff" in a photometric test report.

- Luminaires shall be controlled by a photocontrol, or an astronomical time switch that turns the lighting off when daylight is available.

Residential parking lots should be lighted uniformly to provide a sense of safety; this means that lighting should fill in shadows and dark corners. Two or more less powerful luminaires in different places are preferable to a single luminaire.

6.8 Common Areas of Multifamily Buildings

§150(k)8.

Lighting for common areas of low-rise residential buildings with four or more dwelling units shall be high efficacy, or shall be controlled by an occupant sensor. Occupant sensors used in common areas may have the capability of turning the lights on automatically.

The quality of light provided in common areas of apartments, condominiums, and townhouses must be particularly high, because older or visually impaired residents must be able to find their way safely through spaces that may contain unexpected obstacles. Providing a sufficient level of light is essential.

The lighting of staircases and stairwells is a particular safety concern; the best way to light stairs is with directional light from above, to maximize the contrast between treads and risers. CFL luminaires with reflectors provide this type of light with great efficiency.

Buildings of three stories or less are classified as low-rise. For buildings higher than three stories the Nonresidential Standards apply. The local fire code may limit the options for the use of occupant sensors in corridors and stairways.

6.9 Luminaires in Insulated Ceilings

§150(k)5

Luminaires recessed in insulated ceilings can create a thermal bridge through the insulation. Not only does this degrade insulation performance, but it can also permit condensation on the cold surface of the luminaire if exposed to moist air, for instance in a bathroom.

Luminaires recessed in insulated ceilings must meet three requirements:

- They must be rated for direct insulation contact (IC) by Underwriters Laboratories or other testing/rating laboratories recognized by the International Conference of Building Officials. This enables insulation to be packed in direct contact with the luminaire.
- They must be certified as airtight construction. Airtight construction means that leakage through the luminaire will not exceed 2.0 cubic feet per minute when exposed to a 75 Pascals

pressure difference, when tested in accordance with ASTM E283.

- They must have a sealed gasket or caulking between the housing and ceiling to prevent the flow of heated or cooled air out of the living areas and into the ceiling cavity.

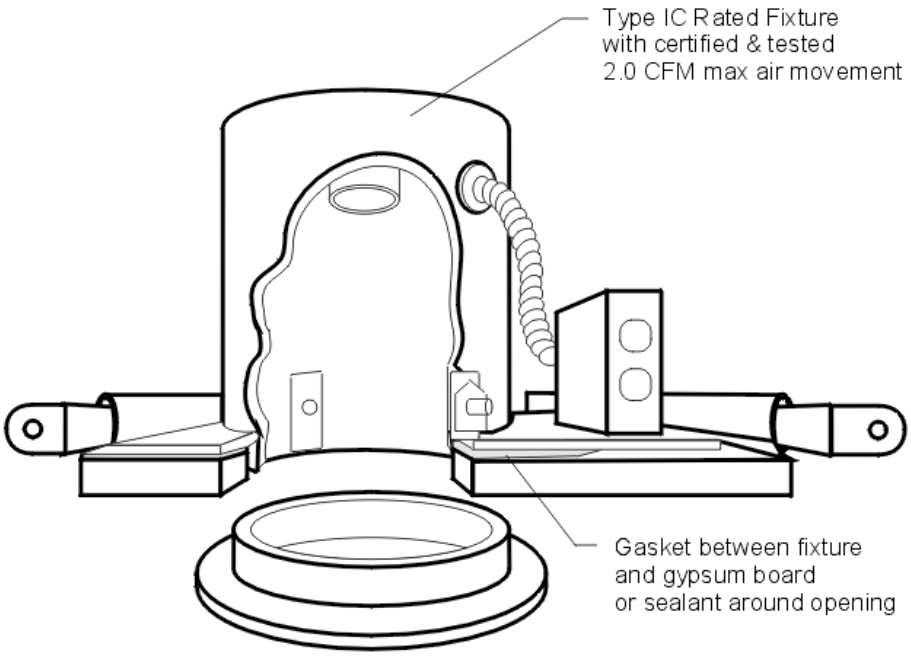

Figure 6-4 – Airtight, Type IC Luminaire

6.10 Inspection Protocol for Recessed Luminaires in Insulated Ceilings

§150(k)5.

Luminaires recessed in insulated ceilings must be IC rated and have a gasket or caulking between the housing and ceiling to prevent the flow of heated or cooled air between conditioned and unconditioned spaces. The luminaire must include a label certifying airtight or similar designation to show air leakage less than 2.0 CFM at 75 Pascals when tested in accordance with ASTM E283. The label must be clearly visible for the building inspector. The building inspector may verify the IC and ASTM E283 labels at a rough inspection. If verified at final inspection the building inspector may have to remove the trim kit to see the labels.

The ASTM E283 certification is a laboratory procedure intended to measure only leakage of the luminaire housing or, if applicable, of an airtight trim kit, and not the installation. Luminaire housings labeled as airtight, airtight ready or other airtight designation do not establish that the luminaire has been installed airtight. The luminaire manufacturer must provide instructions that explain the entire assembly required to achieve an airtight installation.

There are several different methods used by manufacturers to meet the airtight standards. The Energy Commission does not recommend one airtight method over another.

The primary intent is to install a certified airtight luminaire so that it is sufficiently airtight to prevent the flow of heated or cooled air between conditioned and unconditioned spaces. All air leak paths through the luminaire assembly or through the ceiling opening must be sealed. Leak paths in the installation assembly that are not part of the ASTM E283 testing must be sealed with either a gasket or caulk. One example may apply for assemblies where a certified airtight luminaire housing is installed in an adjustable mounting frame; all air leak paths between the certified airtight luminaire housing and the adjustable mounting frame must be sealed, either with a gasket or caulk.

Following is the process for verifying that the requirements for an airtight installation are met.

- Manufacturer specifications (a "cut sheet") of the certified airtight luminaire housing(s) and installation instructions must be made available with the plans to show all components of the assembly that will be necessary to insure an airtight installation consistent with §150 (k) 5 of the Standards. This allows the building inspector to know what method the luminaire manufacturer specifies to achieve airtight installation, and therefore, at what phase of construction the building inspector must inspect the luminaire for airtight compliance.
- One of the following primary methods is specified by the luminaire manufacturer to insure an airtight seal of the certified airtight housing to the ceiling:

1. A gasket is attached to the bottom of the certified airtight housing prior to the installation of the ceiling (i.e. drywall or other ceiling materials) to create an airtight seal. The gasket may be preinstalled at the factory, or may need to be field installed. For field installed gaskets, instructions on how the gasket is to be attached must be provided by the manufacturer. The luminaire must be installed so that the gasket will be sufficiently compressed by the ceiling when the ceiling is installed.

2. A gasket is applied between the certified airtight housing and the ceiling opening after the ceiling has been installed. The gasket creates the airtight seal. The cut sheet and installation instructions for achieving the airtight conditions must show how the gasket is to be attached.

3. Caulk is applied between the certified airtight housing and the ceiling after the ceiling has been installed. The caulk creates the airtight seal. The cut sheet or installation instructions for achieving the airtight conditions must specify the type of caulk that must be used and how the caulk must be applied.

4. A certified airtight trim kit is attached to the housing after the ceiling has been installed. The certified airtight trim kit in combination with the luminaire housing makes the manufactured luminaire airtight. Note that a decorative luminaire trim that is not ASTM E283 certified does not make the manufactured luminaire airtight. Most decorative luminaire trims are not designed to make a luminaire airtight. Rather, these trims are used to provide a finished look between the

ceiling and luminaire housing, and may include a reflector, baffle, and/or lens. However, some trim kits are specifically designed to be a critical component used to make a luminaire installation airtight. These trim kits must be certified airtight in accordance with ASTM E283. Certified airtight trim kits typically consist of a one-piece lamp-holder, reflector cone, and baffle.

The cut sheet and installation instructions for achieving the airtight conditions must show which certified airtight trim kits are designed to be installed with the luminaire housing, and how the certified airtight trim kits must be attached. A gasket must be installed between the certified airtight trim kit and the ceiling.

- The following methods for insuring an airtight seal between the certified airtight housing or certified airtight trim and the ceiling must be field verified at different phases during construction.

1. Gasket attached to the bottom of the certified airtight housing must be inspected prior to the installation of the ceiling when the rough-in electrical work is visible. The inspector must review the cut sheet or installation instructions to make sure the housing and gasket have been installed correctly. All gaskets shall be permanently in place at the time of inspection. It is important that once the ceiling material is installed the gasket will be in continuous, compressed contact with the backside of the ceiling and that the housing is attached securely to avoid vertical movement. The housing must be installed on a plane that is parallel to the ceiling plane to assure continuous compression of the gasket.

2. Gasket applied between the certified airtight housing and the ceiling after the ceiling has been installed must be inspected after the installation of the ceiling. The inspector must review the cut sheet or installation instructions to make sure the housing and gasket have been installed correctly. The gasket shall be permanently in place at the time of inspection. It is important that the gasket is in continuous, compressed contact with the ceiling, and that the housing is attached securely to avoid vertical movement.

3. Caulk applied between the certified airtight housing and the ceiling after the ceiling has been installed must be inspected after the installation of the ceiling. The inspector must review the cut sheet or installation instructions to make sure the housing has been installed correctly and the caulk has been applied correctly. It is important and that the housing is attached securely to avoid vertical movement.

4. Certified airtight trim kit must be inspected after the installation of the ceiling and the installation of the trim. The inspector must review the cut sheet or installation instructions to make sure the luminaire housing and the certified airtight trim kit have been installed correctly. It is important that the housing and the certified airtight trim kit are attached securely to avoid vertical movement. The ASTM E283 certification is a laboratory procedure where the trim kit is tested on a smooth mounting surface. However, it is common for certified airtight trim kits to be installed against a textured ceiling or other irregular ceiling surface. It is important that the gasket is in continuous, compressed contact with the ceiling and the certified airtight trim kit. Therefore, it is important to visually inspect the certified airtight trim kit and gasket next to the ceiling to assure that a continuous seal has been produced.

Certified airtight trim kits may be installed on luminaire housings that may or may not be certified airtight. If the trim kit is certified airtight, it must also have a sealed gasket between the trim kit and ceiling.

6.11 Recommendations for Luminaire Specifications

It is important that luminaires are described fully in the specifications and on drawings so that contractors and subcontractors provide and install residential lighting systems that comply with the Title 24 Residential Lighting Standards. The specifications should be clear and complete so that contractors understand what is required to comply with Standards.

Following are a few suggestions to help reduce the chance that there may be costly change orders required to bring a non-complying building into compliance.

1. Include all applicable Title 24 residential lighting requirements in the general notes on the drawings and other bid documents

2. Include the Title 24 residential lighting requirements with each luminaire listed in the lighting schedule text and details, for example:

Recommendations for Luminaire Specifications	
Luminaire Type	Notes for luminaire schedule
Bath Bar	Bath bar, incandescent lamps, must be controlled by a manual-on occupant sensor per Section 150(k)
Ceiling fixture (i.e., for a bathroom application)	Fluorescent surface-mounted ceiling luminaire, with one F32-T8 fluorescent lamp and electronic ballast, meeting the requirements of Section 150 (k)
Fluorescent Recessed Can (i.e., for a Kitchen application)	Fluorescent recessed can, with one 26 watt pin-based compact fluorescent lamp, meeting the electronic ballast, minimum efficacy, IC, and Airtight requirements of Section 150 (k)
Incandescent Recessed Can (i.e., for a Kitchen application)	Incandescent recessed can with a maximum relamping wattage of 75 watts, meeting the labeling, IC, and Airtight requirements of Section 150 (k)
Incandescent Recessed Can (i.e., for a Dining Room application)	Incandescent recessed can, meeting the IC, and Airtight requirements of Section 150 (k), and controlled by a dimmer switch meeting the requirements of Section 150 (k)
Chandelier	Chandelier, controlled by a dimmer switch meeting the requirements of Section 150 (k)
Occupant Sensor	Manual-on occupant sensor meeting the requirements of Section 150 (k)

6.12 Residential Manual-On Occupant Sensors

In bathrooms, garages, laundry rooms, and utility rooms, manual-on / automatic-off occupant sensors are allowed as an alternate compliance option to high efficacy lighting. Manual-on / automatic-off occupant sensors automatically turn lights off if an occupant forgets to turn them off when a room is unoccupied. Additionally, these sensors should readily provide the occupant with the option of turning the lights off manually upon leaving the room. This option should be available without having to remove the switchplate or any other modifications to the sensor. The manual–off feature is critical because it provides the occupants with the flexibility to control the lighting environment to their satisfaction, and

results in greater energy savings by allowing the occupants to turn off the lights when they are not needed.

Occupant sensors must be “manual-on”, i.e., the sensors must not have the ability to turn the lights on automatically and must not have a setting that can leave the lights in a permanent-on position. If a manual-on occupant sensor has an on/off switch to put the sensor into a temporary programming mode, the on/off programming switch must automatically switch off (for example, within 15 minutes) in the event the end user or installer leaves it in the programming mode.

Some models of occupant sensors have the capability to be changed by the occupant to "automatic-on" by removing the switchplate or touchplate and changing switch settings. These occupant sensors are acceptable as long as the mechanism to switch settings is not visible to the occupant, cannot be easily accessed without the removal of a switchplate or touchplate, and as long as they are delivered to the building site and installed with the "manual-on" setting.

Occupant sensors usually have built-in switches or dials that allow adjustment of the time delay between the last sensing of occupancy and when the lights are turned off. This built-in delay must be 30 minutes or less. Occupant sensors must meet the various requirements of section 119 (d); most commercially available products meet these requirements.

Some occupant sensors have minimum load requirements. For example, an occupant sensor may require that bulbs rated over 25 watts be installed before the sensor will work. However, if an occupant later installs a screw-in compact fluorescent lamp that is rated less than 25 watts, the sensor will no longer work. It is critical to select a sensor that has a low enough minimum load requirement to accommodate however small a load the occupant may install into the socket. Another solution would be to install an occupant sensor that does not have minimum load requirements.

The sensors that have a minimum load requirement are typically the ones that are designed to operate without a groundwire in the switch box which were common wiring scheme in the older residential units. Commercial grade sensors and all other sensors that are designed to take advantage of the groundwire in the switch box typically do not have a minimum load requirement and are the preferred choice to meet the requirements of the Standards.

If you are trying to control a lighting fixture from two different switches you will want to use a ceiling mounted rather than a wall switch occupant sensor. For example, if you are trying to control the lighting in a hallway with a switch at each end of the hallway a wall mounted occupant sensor will not work.

Example 6-18

Question

We would like to use incandescent lighting in a bathroom along with an occupant sensor. Although the sensor has the “manual-on” capability, it also has the capability of turning the lights on automatically by flipping a switch that is located under the switchplate cover. Does this sensor meet the requirements of the Standards?

Answer

Yes, this occupant sensor meets the requirements of the Standards, so long as the controls to switch between manual-on and automatic-on are not visible to the occupant, cannot be easily accessed without the removal of a switchplate or touchplate, and the sensor is shipped from the factory in the manual-on mode. To pass inspection, the occupant sensor must be installed with the control in manual-on.

Example 6-19

Question

Must the sensor in the example above give the occupant the option of turning the light off manually upon leaving the bathroom?

Answer

Yes. The sensors must provide the occupant with the option to turn the lights off manually upon leaving the space. If the occupant forgets to turn the lights off when a room is left unoccupied then the occupant sensor must turn the lights off automatically within 30 minutes. The lights must then be manually switched back on when the lights are needed again. This option provides the occupants with the flexibility to control the lighting environment to their satisfaction, and results in greater energy savings by allowing the occupants to turn off the lights when they are not needed.

Example 6-20

Question

What are our options if we want to use an automatic-on occupant sensor in a bathroom, garage, laundry room, or utility room?

Answer

You can use automatic-on sensors in conjunction with high efficacy luminaires. With high efficacy luminaires you may use a toggle switch, manual-on sensor, or automatic-on sensor. With luminaires in these rooms that are not high efficacy you must use a manual-on occupant sensor.

6.13 Residential Dimmers

One of the alternate options to high efficacy lighting in rooms other than kitchens, bathrooms, garages, laundry rooms, and utility rooms is the use of dimmers.

It is important to correctly match the dimmer with the type of lighting load that is being dimmed. Failure to correctly match the dimmer with the electrical lighting load may result in early equipment failure, including the dimmer, transformer, ballast, or lamp.

Dimmer manufacturers typically offer three basic types of incandescent dimmers: Line voltage (120 volt), low-voltage for use with a magnetic transformer, and low-voltage for use with an electronic transformer. Line voltage incandescent lamps, including tungsten-halogen lamps, can easily be dimmed over their full range of output with voltage control or phase control (electronic) dimmers. Tungsten-halogen lamps can be dimmed with conventional

incandescent dimmers, generally without any special considerations. When dimming a low voltage load, additional components are required in the dimmer to avoid overheating the transformer. UL has separate requirements for 120-volt and low-voltage dimmers due to the heat concern with transformers.

All fluorescent lamps 13 watts or greater, with electronic ballasts, and meeting the minimum lumens per watt already comply with Standards. Even though high efficacy fluorescent lamps with electronic ballasts do not require dimmers to meet Standards, dimmers are permitted to be used with fluorescent lighting systems. Most fluorescent lamps cannot be properly dimmed with the same simple wallbox devices typically used for dimming incandescent lamps. A special control and dimming ballast must be used. Some types of screw-in compact fluorescent lamps with integral ballasts can be dimmed by simple controls. However, many screw-in compact fluorescent lamps cannot be dimmed at all.

7. Performance Method

7.1 Overview

The Warren-Alquist Act requires “performance standards,” which establish an energy budget for the building in terms of energy consumption per square foot of floor space. This requires a complex calculation of the estimated energy consumption of the building, and the calculation is best suited for a computer. The Energy Commission uses a public domain computer program to do these calculations. For compliance purposes it also approves the use of privately developed computer programs as alternatives to the public domain computer program. The public domain computer program and the Commission-approved privately developed programs are officially called alternative calculation methods (ACMs). The rules for approval of privately developed ACMs are contained in the *Residential and Nonresidential Alternative Calculation Method Approval Manuals* that are commonly referred to as "ACM Manuals."

It's easiest to talk about these programs as "compliance software," and we will use that term throughout this manual.

This chapter explains the performance method of complying with the Standards. The method works by calculating the Time Dependent Valuation (TDV) energy use of the proposed design and comparing it to the TDV energy for the standard design (the budget). The standard design is a building with the same size as the proposed design, but incorporating all features of Prescriptive Package D. The energy budget includes water heating, space heating, and space cooling. Lighting is not included in the performance calculations. If the proposed design uses equal or less TDV energy than the standard design, then the building complies. This method provides maximum flexibility because the building designer may trade-off the energy performance of different building components and design features to achieve compliance.

Compliance credit is available if the proposed design exceeds the Package D requirements in these areas. There are significant savings opportunities, including:

- Ceiling insulation
- Wall insulation
- Floor insulation
- Window performance (U-factor and SHGC)
- Fixed shading devices
- Window orientation
- Thermal mass

- Cool roof
- Air retarding wrap
- Blower door testing
- Heating and cooling equipment efficiency
- High EER air conditioners
- Quality insulation installation
- Maximum cooling capacity
- Supply duct location
- Duct insulation
- Diagnostic supply duct location, duct sealing, minimized surface area, and increased R-value
- Ducts in attics under radiant barriers
- Air handler watt draw
- Adequate cooling air flow
- Zonal control
- Water heater efficiency and distribution system type.

Credit for many of the above features cannot be taken in the prescriptive packages, but can be taken under the performance approach.

The performance method is the most popular compliance method under the Standards, with more than 90% of building permit applications being submitted in this manner. The method is especially popular with production homebuilders because they can optimize performance and achieve compliance at the lowest possible cost.

Computer programs used for compliance are approved by the Energy Commission as being capable of calculating space conditioning and water heating energy use in accordance with a detailed set of rules. The computer programs simulate or model the thermal behavior of buildings by calculating hourly heat flows into and out of the various thermal zones of the building. The tools must demonstrate their accuracy in analyzing annual space conditioning and water heating energy use of different building conservation features, levels and techniques.

- Approved computer programs must be able to:
- Automatically calculate the standard design TDV energy budget for heating, cooling, and water heating
- Calculate the TDV energy use of the proposed design in accordance with specific fixed inputs, restricted inputs and user-specified inputs
- Print the appropriate standardized compliance reports.

This chapter provides only a general overview of the performance method. Each computer program that is approved by the Energy Commission is required to have a compliance supplement that provides more detailed information regarding the use of the software for compliance purposes. The requirements for the compliance supplement along with other requirements for approved computer programs are documented in the 2005 Residential ACM Manual.

7.2 What's New for 2005

The most significant change in the performance method for the 2005 Standards is the switch to time-dependent valuation of energy rather than the previous definition of source energy. The new method favors peak energy saving measures over off peak measures.

Credit is no longer given for reduced glazing area below the prescriptive limit.

Credit is no longer given for using a central water heating system in multifamily buildings.

Form 3Rs are eliminated. U-factors for walls, ceilings and floors must now be taken from tables of constructions listed in the Joint Appendix IV.

The old C-2R is no longer necessary. The Computer Method Summary (C-2R) is combined with the CF-1R to reduce duplication.

There are several new compliance credits:

- high EER air conditioners,
- gas cooling,
- high quality insulation installation,
- properly sized air conditioners,
- efficient air conditioner fan motors, and
- ducts buried in attic insulation.

For additions and alterations, compliance credit for alterations made to an existing building is now available only if the improved measure meets or exceeds the prescriptive requirement.

7.3 The Process

Any approved computer program may be used to comply with the Standards using the performance method. The following steps are a general outline of the typical computer program procedure:

- Collect all necessary data—areas and thermal characteristics of fenestration products, walls, doors, roofs, ceilings and floors, construction assemblies, including fenestration U-factor and solar heat gain coefficients, equipment efficiencies, water heating information—from drawings and specifications.

Although most computer programs require the same basic data, some information and the manner in which it is organized may vary according to the particular program used. Refer to the compliance software compliance supplement for additional details.

- Enter data into the computer program describing the surface areas and thermal performance properties of building envelope components, water heating system and equipment, and HVAC system and equipment. Input values and assumptions must correctly correspond to the proposed design and conform to the required mandatory measures.
- Launch a computer run to automatically calculate the TDV energy of the standard design and the proposed design.

The building complies if the total TDV energy use of the proposed design is the same as or less than the standard design TDV energy budget.

When creating a computer input file, use the space provided for the project title information to concisely and uniquely describe the building being modeled. User-designated names should be clear and internally consistent with other orientations and/or buildings being analyzed. Title names and explanatory comments should assist individuals involved in both the compliance and enforcement process.

7.3.1 Defining the Standard Design

Each approved computer program must automatically calculate the TDV energy use of the standard design. The standard design is created based upon data entered for the proposed design using all the correct fixed and restricted inputs.

The computer program defines the standard design by modifying the geometry of the proposed design and inserting the building features of prescriptive Package D. This process is built into each approved computer program and the user cannot access it. Key details on how the standard design is created and calculated by the computer programs, including the listing of fixed and restricted input assumptions, is documented in the 2005 Residential ACM Manual.

The standard design assumes the same total conditioned floor area, conditioned slab floor area, and volume as the proposed design, and the same gross exterior wall area as the proposed design, except that the wall area in each of the four cardinal orientations is equal. The standard design uses the same roof/ceiling area, raised floor area, slab-on-grade area and perimeter as the proposed design, assuming the standard insulation R-values required in the prescriptive packages.

Total fenestration area in the standard design is equal to the proposed design if the fenestration area in the proposed design is less than or equal to 20% of the floor area, otherwise, the fenestration area of the standard design is equal to 20% of the floor area. Fenestration area in the standard design is evenly distributed between the four cardinal orientations. SHGC and U-factors are those listed in Package D, and no fixed shading devices such as overhangs are assumed for the standard design.

The standard design includes minimum efficiency heating and cooling equipment, as well as the minimum duct R-value with ducts in a vented attic. Ducts are assumed to be sealed as required by Package D. The standard design also has correct refrigerant charge as required by Package D.

For water heating systems that serve individual dwelling units, the standard design is a gas storage water heater with an EF of 0.575. The standard design has a standard distribution system, i.e., the first five feet of hot and cold water piping from heating source and the entire length of piping to kitchen fixtures that are ¾ in. diameter or larger are insulated as specified in §150 (j) 2A or §150 (j) 2B.

For water heating systems that serve multiple dwelling units, the standard design system type (central or individual water heaters) is the same as the proposed design system. Other details are provided in the *2005 Residential ACM Manual*.

7.3.2 Standard Reports

For consistency and ease of enforcement, the manner in which building features are reported by compliance computer programs is standardized. Energy Commission-approved computer programs must automatically produce compliance reports in this standard format. The principal report is the Certificate of Compliance (CF-1R).

The CF-1R has two highly visible sections, one for special features and modeling assumptions, and a second for features requiring field verification and/or diagnostic testing by approved HERS raters. These two sections serve as a punch list for special consideration during compliance verification by the local building department and the HERS rater. Items listed in the Special Features and Modeling Assumptions section indicate that unusual features or assumptions are used for compliance, and they call for special care by the local building department. Items listed in the HERS Required Verification section are for features that rely on diagnostic testing and independent verification by approved HERS providers/raters to ensure proper field installation. Diagnostic testing and verification by HERS providers/raters is in addition to local building department inspections.

Table 7-1 lists some of the measures that are to be listed on the CF-1R. For each measure, the table indicates whether building official verification, HERS rater field verification, or HERS rater diagnostic testing are required.

Table 7-1 – Special Features to be Listed on CF-1R

Category	Building Official Verifi-cation of Special Features	HERS Rater Verifi-cation	HERS Rater Diag-nostic Testing	Measure
General	Y			Compliance for all orientations
Ducts			Y	Duct leakage
		Y		Less than 12 ft. of duct outside conditioned space
	Y			100% of ducts in crawlspace/basement
	Y			Supply registers within two ft of floor
		Y		Diagnostic supply duct location, surface area, and R-value
	Y			Ducts in attic with radiant barriers
	Y			Duct increased R-value
		Y		Buried ducts
		Y		Non-standard duct location
Envelope	Y			Air retarding wrap
			Y	Reduced infiltration (blower door). May also require mechanical ventilation.
		Y		Quality insulation installation
	Y			Solar gain targeting (for sunspaces)
	Y			Inter-zone ventilation
	Y			Radiant barrier
	Y			Non-default vent heights
	Y			Vent area greater than 10%
	Y			Exterior shades
	Y			High thermal mass
	Y			Metal framed walls
	Y			Sunspace with interzone surfaces
	Y			Cool roof
HVAC Equip		Y		Thermostatic expansion valve (TXV)
			Y	Refrigerant charge
		Y		High EER
	Y			Zonal control
		Y		Mechanical ventilation
			Y	Air handler fan power
			Y	Adequate air flow
	Y			Hydronic heating systems
		Y		Air conditioner size
Water heating	Y			Combined hydronic
	Y			Non-standard water heaters (wh/unit)
	Y			Water heater distribution credits
	Y			Non-NAECA water heater
	Y			High EF for existing water heaters

A sunspace is a passive solar system consisting of an unconditioned space facing south or near south. See computer program vendor's compliance supplement for modeling these spaces.

7.3.3 Professional Judgment

Some modeling techniques and compliance assumptions applied to the proposed design are fixed or restricted. There is little or no freedom to choose input values for compliance modeling purposes. However, other aspects of computer modeling remain for which some professional judgment is necessary. In those instances, exercise proper judgment in evaluating whether a given assumption is appropriate.

Building departments have full discretion to reject a particular input, especially if the user has not substantiated the value with supporting documentation.

Two questions may be asked in order to resolve whether professional judgment has been applied correctly in any particular case:

- Is a simplifying assumption appropriate for a specific case? If simplification reduces the predicted energy use of the proposed building when compared to a more explicit and detailed modeling assumption, the simplification is not acceptable (i.e., the simplification must reflect higher energy use than a more detailed modeling assumption).
- Is the approach or assumption used in modeling the proposed design consistent with the approach or assumption used in generating the energy budget?

One must always model the proposed design using the same assumption and/or technique used by the program in calculating the energy budget unless drawings and specifications indicate specific differences that warrant conservation credits or penalties.

Any unusual modeling approach, assumption or input value should be documented with published data and should conform to standard engineering practice.

For assistance in evaluating the appropriateness of particular input assumptions, call the Energy Hotline or call the vendor of the computer program.

7.4 Mixed Occupancy Buildings

§100(e)

Some residential buildings have areas of other occupancies, such as retail or office, in the same building. An example of this might be a three-story building with two floors of apartments above ground floor shops and offices. The first thing to consider when analyzing the energy compliance of a mixed occupancy building is the type and area of each occupancy type.

Depending on the area of the different occupancies, you may be able to demonstrate energy compliance as if the whole building is residential. This is allowed if the residential occupancy accounts for greater than 90% of the conditioned floor area of the building (or permitted space).

Note: Mandatory measures apply separately to each occupancy type regardless of the compliance approach used. For example, if complying under the mixed occupancy exception, both residential documentation (MF-1R form) and nonresidential documentation for mandatory measures must be submitted with other compliance documentation.

If the building design does not fit the criteria described above for a dominant occupancy, then the low-rise residential occupancy type must be shown to comply on its own. The remaining occupancy types must be shown to comply separately either by independent compliance for each occupancy or (for the nonresidential performance approach) by combining nonresidential occupancies in accordance with the rules of the Nonresidential ACM Manual. This may be done by using any of the approved prescriptive or performance methods available for each occupancy type. As a result, documentation for each occupancy type must also be considered separately, and a Certificate of Compliance must be submitted for each occupancy type. Note that mixed high-rise and low-rise residential occupancies will not occur in the same building because the designation applies to the building.

7.5 Multifamily Buildings

§101(b)

Envelope and HVAC equipment requirements for multifamily apartment buildings with four or more habitable stories (and hotels or motels of any number of stories) are covered by the Nonresidential Standards. These are explained in the *Nonresidential Compliance Manual*. Multifamily buildings with one to three habitable stories are considered low-rise residential buildings and are discussed in this manual.

Compliance for a low-rise multifamily building may be demonstrated either for the building as a whole or on a unit-by-unit basis. Floors and walls between dwelling units are considered to have no heat transfer, and may be ignored in performance calculations.

7.5.1 Whole Building Compliance

The simplest approach to compliance for a multifamily building is to treat the building as a whole, using any of the compliance paths described in earlier chapters. In practice, this process is similar to analyzing a single family residence except for some differences in water-heating budgets and internal gains, as explained in the *2005 Residential ACM Manual*.

7.5.2 Compliance Unit-By-Unit

The other compliance approach for multifamily buildings is to demonstrate that each dwelling unit complies separately. Each unique unit in the building, determined by orientation and floor level, must be separately modeled using an approved computer program. In this approach, surfaces, which separate dwelling units, may be ignored as they are assumed to have no heat loss or heat gain associated with them. Surfaces between dwelling units and a central corridor must be modeled if the corridor is not directly conditioned (see Joint Appendix I for definition). If it is conditioned, the corridor area may be modeled separately.

Different orientations and locations of each unit type within the building must be considered separately. That is, a one-bedroom apartment on the ground floor of a three-story building is different from the same plan on a middle floor or the top floor, even if all apartments have the same orientation and are otherwise identical. Likewise, end units must be modeled separately from the middle units; and opposite end units must both be modeled. With this approach every unit of the building must comply with the standard, so this approach is more stringent than modeling the building as a whole (see Figure 7-1).

Other options for showing unit-by-unit compliance are similar to those for subdivisions and are explained in Section 7.6 of this chapter.

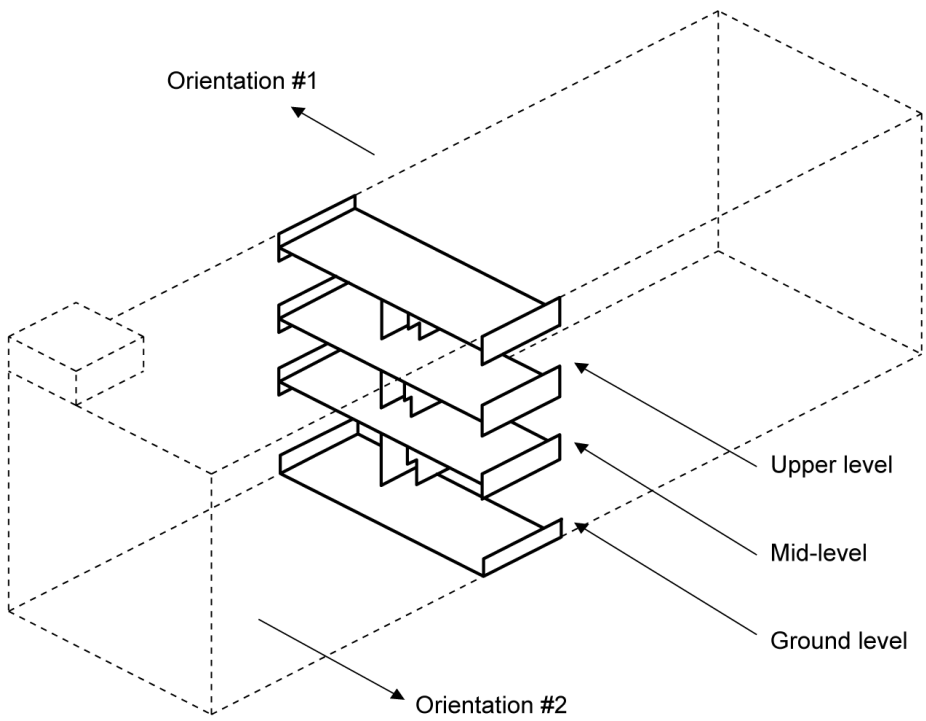

Figure 7-1– Multifamily Building Compliance Option
Demonstrate Compliance for Each Generic Unit Type in Each of its Characteristic Locations

Example 7-1

Question

When preparing compliance calculations for a three-story apartment complex, I have the option of showing compliance for each dwelling unit or for the entire building. If I use the individual dwelling unit approach, do I need to provide calculations for every dwelling unit?

Answer

Each dwelling unit must comply with the Standards when using this approach. When dwelling units have identical conditions the calculations, can be combined. This means you will show separate compliance for all unique conditions, such as:

Front facing North

Front facing West

Front/side walls facing East and North

Front/side walls facing East and South

Middle units and both end units

Exterior roof, no exterior floor

Exterior floor, no exterior roof.

Surfaces separating two conditioned spaces (such as common walls) have little heat transfer and can be disregarded in the compliance calculations. Alternatively, you can model the entire building.

7.6 Subdivisions And Master Plans

Subdivisions often require a special approach to energy compliance, since they generally include one or a few basic building or unit plans repeated in a variety of orientations. The basic floor plans, *as drawn,* may also be used in a mirror image or *reversed* configuration.

There are two compliance options for subdivisions. They are:

- Model each individual building, or building condition, separately according to its actual orientation.
- Model all four cardinal orientations for each building or plan type with identical conservation features for no orientation restrictions.

7.6.1 Individual Building Approach

The most straightforward compliance option for subdivisions is to analyze each individual building in the project separately using any compliance method. This may be practical for subdivisions with only custom buildings, or with only one or two specific orientations for each building plan. This approach requires that each unit comply separately, with separate documentation submitted for each unit plan in the orientation in which it will be constructed.

7.6.2 Multiple Orientation Alternative: No Orientation Restrictions

§151(c)

The computer method may be used to demonstrate that a single family dwelling plan or a unit plan in a multifamily building complies regardless of how it is oriented within the same climate zone. To assure compliance in any orientation, the annual energy consumption must be calculated in each of the four cardinal orientations: true north, true east, true south and true west. With this option, the buildings must have the identical combination of conservation measures and levels in each orientation and comply with the energy budget in each case.

If a building floor plan is reversed, either the original plans or the reversed plans may be shown to comply in all four cardinal orientations. Multifamily buildings may be analyzed as a whole building using this method or on a unit-by-unit approach at the option of the permit applicant.

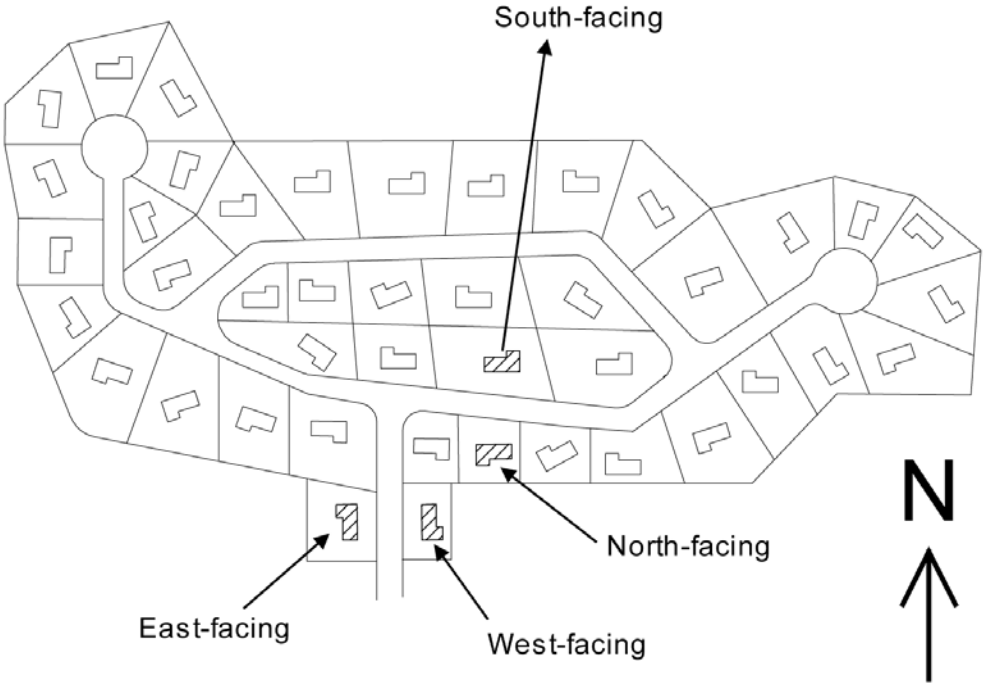

Figure 7-2– Subdivisions and Master Plans Compliance Option
Demonstrate Compliance for Each Cardinal Orientation for Each Basic Model Type

For compliance, submit documentation of the energy budgets for each of the four orientations. Only one CF-1R form is required.

7.7 HVAC Issues

7.7.1 No Cooling Installed

When a building does not have a proposed cooling system, there is no compliance credit. The air conditioning system is modeled to be equivalent to Package D.

7.7.2 Equipment without SEER

For equipment without a tested SEER, the EER is used in place of the SEER.

7.7.3 Multiple HVAC Systems

Buildings with multiple HVAC systems not meeting the zonal control criteria (see 4.4.5) may model each zone separately without taking credit for zonal control.

For buildings using more than one system type, equipment type or fuel type, where the types do not serve the same floor area, model either the building zone or enter the floor area served by each type.

For floor areas served by more than one heating system, equipment, or fuel type, indicate which system, equipment, and fuel type satisfies the heating loads. To satisfy the heating load, the equipment capacity for the specified system, equipment and fuel type must be large enough to satisfy the design heating requirements.

For floor areas served by more than one cooling system, equipment, or fuel type, indicate which system, equipment, and fuel type satisfies the cooling loads.

When there is more that one system meeting the heating or cooling load for the same space, the system that has not been selected as the proposed design for the performance compliance analysis (supplementary heating) must still meet all the mandatory requirements of the standards.

For example, an electric slab floor heating system installed in all or part of a building as supplemental heat would need to meet the slab edge insulation requirements in §118 (g) and the setback thermostat requirements of §150 (i) even though the compliance analysis uses a central gas furnace with air distribution for the entire building.

A system need not be a central system to be considered the primary system that provides heating or cooling to the space. For example, in a small apartment, a single package terminal air-conditioner or a gas wall furnace may be considered to be the primary system that provides heat to the entire apartment even though there is no distribution system (other than doorways) between the heating unit and other rooms such as the bedroom or bathroom.

If the user chooses to not install a setback thermostat on a “supplemental” heating system (exception to §150 (i)), then the user must model the supplemental system to achieve compliance. If the system without a setback

thermostat serves only a portion of the building that portion of the building is modeled with the supplemental system. The remainder of the building is modeled with the primary heating system.

7.7.4 Gas-Fired Cooling Systems

Gas-fired (absorption) cooling systems are modeled with two coefficient of performance (COP) values—one for gas and one for electric.Heating Systems using Heat Pumps

See compliance program vendor's compliance supplement for details on how to model these types of systems.

7.7.5 Cool Roofs

Compliance credit may be taken when a cool roof is installed when using the performance approach. This topic is discussed in detail in Section 3.3.7, Design Options, Cool Roofs, of this manual.

7.7.6 Existing + Addition + Alteration Approach

The performance approach may be used to show compliance for alterations in existing buildings, new additions, and Existing + Addition + Alteration. This topic is discussed in Chapter 8, Section 8.7.3 Existing + Addition + Alteration Approach of this manual.

8. Additions, Alterations and Repairs

8.1 Introduction

Additions, alterations, and repairs are common construction projects for California homeowners. The Standards apply to both additions and alterations, but not to repairs.

Additions

§152 (a)

This section is also shown in Appendix B of this document.

An addition is a change to an existing building that increases conditioned floor area *and* volume. Converting a garage or unheated basement into a conditioned living space, enclosing and conditioning a patio, or building onto a home are all examples of an addition, as is a bay window that extends all the way to the floor and therefore increases both floor area and volume.

Alterations

§152 (b)

This section is also shown in Appendix B of this document.

Alterations are changes to a building's envelope, space-conditioning system, water-heating system or lighting system, that are not additions. An alteration does not increase both conditioned volume and floor area. Examples include the following:

- Adding a new skylight (or window including a bay window that does not extend to the floor) to an existing building. If the skylight has a light well that cuts through an existing attic, the alteration adds conditioned volume but is not an addition because it does not add conditioned floor area.
- Adding a new greenhouse window to an existing building. This is an alteration rather than an addition because it adds conditioned volume to the building, but not conditioned floor area.
- Adding a loft within the existing conditioned volume of a residence. This is an alteration rather than an addition because it adds conditioned floor area but not conditioned volume.
- Installation of a new central air conditioning and heating system.
- Replacement of an air conditioner or the exterior unit or indoor coil of a split system air conditioner.

- Replacement of a furnace or water heater.
- Window replacement where all the glazing in an existing fenestration opening is replaced with a new manufactured fenestration product.
- Enlarging an existing window.
- Adding a new window or door to an exterior wall.
- Adding new hardwired lighting.

Repairs

§101(b)

Repairs to low-rise residential buildings are not within the scope of these Standards. A repair is the reconstruction or renewal of any part of an existing building for the purpose of its maintenance. In this case, "part of a building" means a component, system or equipment, for which there are requirements in the standards. In simple terms, when such a component, system, or equipment of an existing building breaks or is malfunctioning, and a maintenance person fixes it so it works properly again, that is a repair. If instead of fixing the break or malfunction, the component, system or equipment is replaced with a new or different one – it is considered an alteration and not a repair. Some examples of repairs are the following:

- Replacing a broken pane of glass but not replacing the entire window.
- Replacing a failed compressor in an air conditioner but not replacing the entire air conditioner.
- Replacing a failed fan motor or gas valve in a furnace but not replacing the entire furnace.
- Replacing a heating element in a water heater but not replacing the entire water heater.

Example 8-1

Question

A sunspace addition is designed with no mechanical heating or cooling and a glass sliding door separating it from all existing conditioned space. Under what conditions will the Standards apply to this addition?

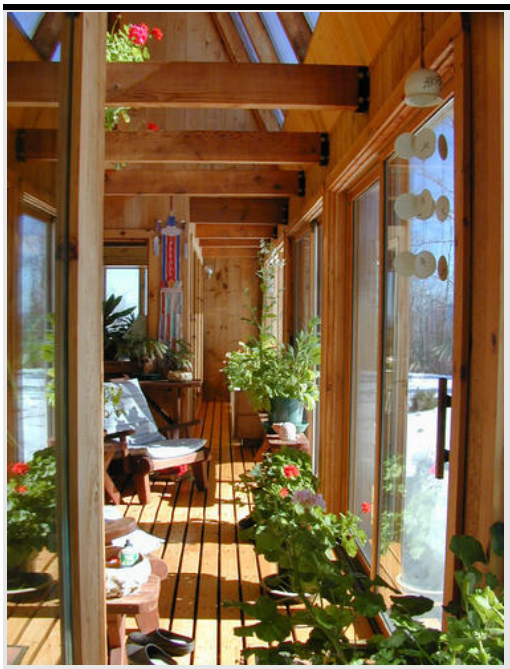

Unconditioned Sunspace

Answer

The Standards do not apply if the space is unconditioned. The sunspace is unconditioned if:

- The new space is not provided with heating or cooling (or supply ducts)
- All openings between the new space and the existing house can be closed off with weather-stripped doors and windows
- The addition is not indirectly conditioned space (defined in Joint Appendix IV)

A building official may require a sunspace to be conditioned if it appears to be habitable space, in which case the Standards apply.

Example 8-2

Question

An existing duplex is remodeled without increasing the amount of conditioned space. Do the Standards apply?

Answer

This is an alteration. Even though no new conditioned space is being created, the remodel must comply with applicable measures described in §152 (b) of the Building Energy Efficiency Standards.

Example 8-3

Question

An existing house is remodeled without increasing conditioned space. New windows are replacing old ones, and a new window is being added. Several exterior walls are being opened up to install new wiring. What requirements will apply?

Answer

New windows must meet the maximum U-factor and SHGC requirements of Package D. The house must also comply with the mandatory measures for caulking/sealing around windows and insulation in the exterior walls being altered (See Chapter 3).

8.2 Compliance Approaches

§152

There are three general approaches for showing that residential additions comply with the Standards. The entire structure may be treated as new construction ("whole building"), but this is usually the most stringent approach. The second method is to treat the addition as its own structure ("addition alone"). The third method is to consider the addition along with the existing house ("existing + addition + alteration"). This third method provides the most flexibility but requires using the performance approach.

Table 8-1 compares these three approaches, and details are documented in the vendor's performance approach compliance supplement.

For alterations there are two compliance options. The first option is the prescriptive method, which requires that all components being altered meet the Package D requirements (with a few exceptions as described later). The second compliance option for alterations is the performance method using the "existing + alteration" approach which follows the same rules as the existing + addition + alteration method described in Section 8.7.3.

Table 8-1 – Comparison of Compliance Methods for Additions

Approach	Prescriptive Method	Performance Method
Whole Building All building systems and components shall comply as if the entire structure is new construction.	This approach may be the easiest compliance method for major renovations and gut rehabilitation projects where the distinction between the existing house and the addition is muddled.	Provides most of the advantages of the performance approach for the addition alone and the existing-plus-addition-plus-alteration approach, but is likely to be more stringent.
Addition Alone The addition is treated as a separate structure.	All new components shall comply with the Package D prescriptive requirements. Glass area limits depend on the size of the addition.	Some flexibility. Allows tradeoffs in efficiency measures within the addition, but not with existing house. Fenestration area can exceed prescriptive limits if the project complies with the energy budget. Internal gains are prorated by floor area. This method is not allowed when modifications are proposed to the existing water heating system, except if only one additional water heater is installed, and it meets the criteria described in §152(a)2A Exception 3. Otherwise, the Existing + Addition + Alteration approach is required.
Existing + Addition + Alteration The existing house is modeled in its present condition. Then the existing house is modeled with all proposed alterations, as well as the proposed addition.	Not applicable	Improvements in the existing house may be used to offset features in the addition that do not meet the prescriptive requirements. Altered features must meet or exceed the prescriptive requirements in order to obtain credit. This method is also used whenever an alteration is made to existing buildings, whether or not there is an addition to the building at the same time. Fenestration area can exceed prescriptive limits if the project complies with the energy budget.

8.3 Building Envelope

This section describes the mandatory and prescriptive requirements for the building envelope as they apply to additions and alterations. The performance method is discussed in a later section.

8.3.1 Mandatory Requirements

The mandatory measures apply to all added or altered envelope components just as they do to new construction, regardless of whether the prescriptive or performance compliance method is used. The following requirements may apply. See Chapter 3 for more details.

- Fenestration air leakage
- Fenestration U-factor and SHGC ratings

- Fenestration temporary and permanent labels
- Certification of insulating materials
- Restrictions on use of urea formaldehyde foam insulation
- Flame spread ratings
- Ceiling insulation mandatory measures
- Minimum wall insulation
- Minimum floor insulation
- Slab insulation moisture resistance and physical protection (when required by the prescriptive requirements)
- Mandatory slab insulation for heated slabs
- Sealing of joints and other openings
- Vapor barrier in climate zones 14 and 16

When insulation is installed in the attics of existing buildings, at least R-38 shall be installed in climate zones 1 and 16 and at least R-30 in the other climate zones. When ceilings without attics are altered, at least R-19 shall be installed between wood-framing members, or sufficient insulation to achieve the equivalent of R-19 insulation between wood framing members (See §150 (c)). To be considered "altered", the space between framing members must become accessible as a part of a ceiling/roof modification. For example, if roofing material is being replaced, but the roof sheathing to which the roofing is nailed is not removed, then the insulation would not be required.

Existing structures that already have R-11 insulation installed in framed walls are exempt from the mandatory minimum R-13 wall insulation required by §150(c) if the building can show compliance using performance compliance and modeling R-11.

8.3.2 Prescriptive Requirements for Additions Alone

§152 (a)

In general, the prescriptive requirements apply to additions in the same way they apply to entirely new buildings and must be documented on the CF-1R Form. However, there are a few exceptions as noted below and summarized in Table 8-2.

Use the worksheet form WS-4R to document existing, removed and proposed fenestration by orientation. The total net percentage of fenestration should be 20% or less including West facing fenestration. West facing area includes skylights tilted to the west or tilted in any direction when the pitch is less than 1:12, and must not exceed 5% of the conditioned floor area (CFA).

Plan checkers will verify the WS-4R Total Percentage of Fenestration calculation against the Total Net Fenestration and the CFA to make sure that they do not exceed the allowable limits for total fenestration area as well as west facing fenestration area.

facing fenestration area in climate zones 2, 4, and 7-15, exceeds 5% of the CFA, the performance compliance approach must be used.

- If the addition has a floor area of 100 ft² or less, then up to 50 ft² of fenestration area is allowed, additions that add less than 50ft² of fenestration area need to meet the Package D requirements for fenestration U-factor and SHGC, but are exempt from the fenestration maximum total area limits (this includes both 20% of conditioned floor limit and the 5% west facing limit). There is no credit for glazing removed when using this option. For additions with floor areas of 100 ft² or less that have greater than 50 ft² of fenestration area, the performance compliance is optional or use the less than 1,000 ft² column.
- If the addition has a floor area equal to or less than 1,000 ft², then only R-13 wall insulation is required in all climate zones and shall meet all the requirements of Package D as indicated in Table 8-2. The allowed 20% CFA limit and of which a maximum 5% CFA is allowed as west facing glazing (in climate zones 2, 4, and 7-15) non-west orientations may be increased by the amount of glazing removed in the wall that separates the addition from the existing house. Note Performance approach is an alternative when not able to comply prescriptively.
- If the addition has a floor area greater than 1,000 ft² the fenestration need to meet the Package D requirements for fenestration U-factor and SHGC. The allowed 20% CFA limit and of which a maximum 5% CFA is allowed as west facing glazing (in climate zones 2, 4, and 7-15).

Table 8-2 – Prescriptive Envelope Requirements for Additions

	Size of Addition		
Component	100 ft² or less	1,000 ft² or less	More than 1,000 ft²
Ceiling Insulation	R-19	Package D	Package D
Wall Insulation [1]	R-13	R-13	Package D
Floor Insulation	R-13	Package D	Package D
Fenestration U- factor [3]	Package D	Package D	Package D
Glazing Area	≤ 50 ft²	Package D (20%) + Glass Removed[4]	Package D
Solar Heat Gain Coefficient (SHGC)	Package D	Package D	Package D
Radiant Barrier [2]	N/A	Package D	Package D

[1] Heavy mass and light mass walls may meet the Package D requirements for mass wall insulation instead of R-13.
[2] The radiant barrier requirement applies only to the roof area of the addition. It is not necessary to retrofit a radiant barrier in the existing attic.
[3] Dual-glazed greenhouse windows and dual-glazed skylights are assumed to meet the applicable U-factor requirement.
[4] No more than 5% of the CFA is allowed for west facing regardless of glass area removed to make way for the addition. The balance of removed glass area can be added to the rest of the orientations pus the maximum allowed 20% of the CFA.

The Package D Alternative, which requires more energy efficient windows and space conditioning equipment in lieu of measures that require field verification and diagnostic testing, may also be used with addition alone, provided that if space conditioning equipment is installed, it will have the specified efficiency,

and its distribution system will serve only the addition. The Package D Alternative cannot be used for alterations including additions that involve alterations to the existing building features within the scope of Title 24, Part 6. The specific requirements of Package D Alternative vary by climate zone and are described in Table 151-C of the Standards (in Appendix B of this document).

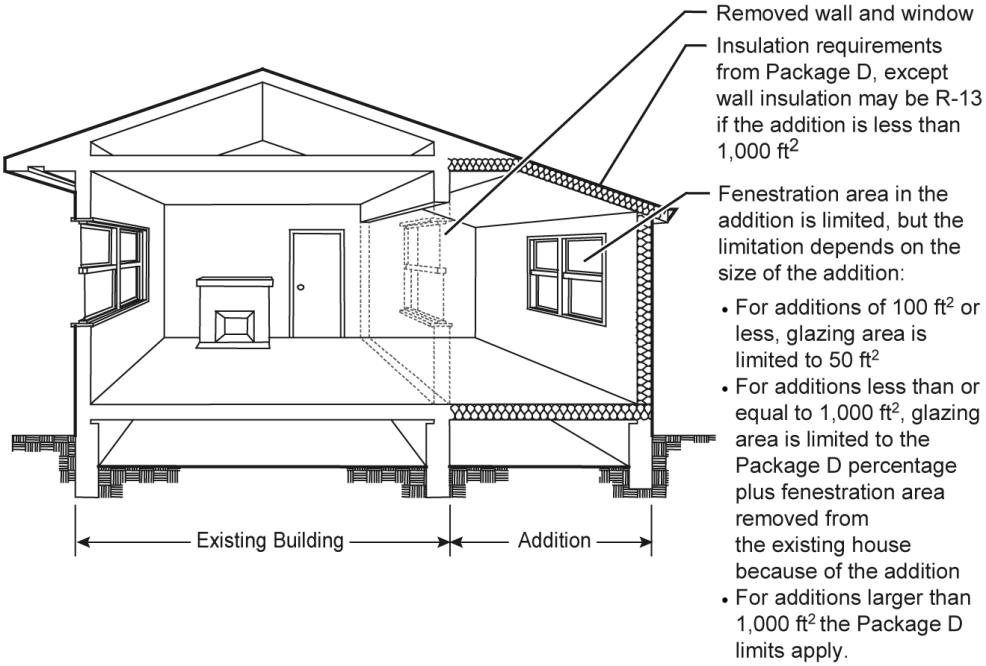

Figure 8-1 – Addition Alone Prescriptive Compliance Approach

Greenhouse Windows

Greenhouse windows are special windows that project from the façade of the building. In addition to the projected area, greenhouse windows typically have two sides, a top and a bottom surface from which heat is exchanged. The NFRC-rated U-factor for greenhouse windows is typically quite high and does not meet the prescriptive requirements for fenestration products.

When greenhouse windows are used in additions or alterations, they are deemed to comply with the prescriptive U-factor requirement when they are dual-glazed, and the prescriptive SHGC limit still applies. This applies only for greenhouse windows used in additions or alterations, not in newly constructed buildings. Greenhouse windows must either meet the SHGC requirements with an NFRC rating, or, if they are being installed with other fenestration products, they may use the default SHGC values from Table 116-B and weight average the SHGC values as described in §151 (f) 4 A.

Greenhouse windows add volume, but not floor area to the building and are therefore alterations, not additions, if this is the only change.

Skylights

Skylights are treated the same as greenhouse windows for additions or alterations. Dual-glazed skylights are deemed to comply with the U-factor

requirements, but must still comply with the prescriptive SHGC limit. The SHGC for skylights may be determined either by using an NFRC rating, a default value from Table 116-B, or by calculating the SHGC using a manufacturer's center of glass $SHGC_c$ to determine $SHGC_{fen}$ with the following equation.

$SHGC_{fen} = 0.08 + 0.86 \times SHGC_c$

8.3.3 Prescriptive Requirements for Alterations

§152(b)1

When over 50 ft^2 of fenestration area is added to an existing building, then the fenestration must meet the requirements of Package D for U-factor, fenestration area, and SHGC. The area requirement means that the total fenestration area for the whole building, including the added fenestration, must not exceed 20% of the conditioned floor area. Note that the 5% west-facing limit is not applicable to alterations. Use the worksheet form WS-4R to document existing, removed and proposed fenestration by orientation. Plan checkers will verify the WS-4R Total Percentage of Fenestration calculation against the Total Net Fenestration and the CFA to make sure that they do not exceed the allowable limits for total fenestration.

If the Total Percentage of Fenestration exceeds 20%, performance compliance approach must be used. Note that the Package D West fenestration area restriction does not apply to fenestration alterations.

Alterations that add not more than 50ft^2 of fenestration area need to meet the Package D requirements for fenestration U-factor and SHGC, but are exempt from the fenestration maximum total area limits.

An important new requirement for 2005 is that replacement windows must also meet the U-factor and SHGC requirements of Package D, even if the fenestration area does not increase. This requirement applies when all the glazing in an existing fenestration opening is replaced with a new manufactured fenestration product. The requirement applies even if only a single window is being replaced. It does not apply to repairs when only a portion of the glazing within a single opening is replaced. It also does not apply if the existing window is replaced with a field-fabricated window (defined in Chapter 3).

As noted earlier, greenhouse windows and skylights added during an alteration are deemed to comply with the prescriptive U-factor requirements as long as they are dual-glazed. The package D SHGC requirement must still be met. See Example 8-7 below for details.

Example 8-4

Question

A small addition of 75 ft^2 is being planned – an existing porch is being covered off a master bedroom. The existing heating and air conditioning system will serve the new conditioned space. The contractor wants to follow the prescriptive requirements. What requirements apply? The house is located in climate zone 7.

Answer

Since the addition is smaller than 100 ft^2, the fenestration area is limited to a maximum of 50 ft^2. The fenestration must meet the U-factor and SHGC requirements of Package D. For climate zone 7, these fenestration requirements are a maximum U-factor of 0.67 and a maximum SHGC of 0.40. For an addition of this size, insulation only must meet the mandatory requirements of R-19 ceiling insulation; R-13 wall insulation and R-13 floor insulation.

Since the existing heating and cooling equipment is being used for the addition, that equipment does not have to meet the mandatory equipment efficiency requirements. Mandatory duct insulation requirements of §150(m) apply (R 4-2 minimum in unconditioned space). All other mandatory requirements in §150 must be met. Note that this addition could comply with the requirements of §152 (a) 1 B, instead. For some additions this could allow more glazing area but additional Package D measures would apply.

Example 8-5

Question

A kitchen is being expanded by 150 ft^2. As part of the addition a sliding glass door (42 ft^2) is being removed. How much fenestration area is allowed for this addition?

Answer

Since this addition is no larger than 1000 ft^2, the Standard permits the area of fenestration removed during the remodel to be added to the Package D fenestration area allowance (20% of floor area). In this case, the Package D allowance is 30 ft^2. Therefore, the total allowance for this addition is 72 ft^2 of fenestration area. If the addition were larger than 1000 ft^2, the area of the fenestration removed could not be added to the 20% Package D fenestration area allowance.

Example 8-6

Question

If I remove a window from the existing house while doing an addition, can I re-use this window in the addition, or does it need to meet a certain U-factor criterion?

Answer

You can use this existing window in the addition; however, you must use the actual or default U-factor and SHGC of this window in showing compliance. Therefore, meeting the prescriptive requirements may not be possible, and performance compliance may be the only option. Window certification and labeling requirements of §116(a) do not apply to used windows.

Example 8-7

Question

For additions and alterations that include a greenhouse window or a skylight, what are the U-factor and SHGC requirements? What is the area used for calculations for greenhouse windows?

Answer

In additions and alterations, you can assume that double-glazed greenhouse windows or skylights have the U-factor required to comply with the prescriptive standards and that this U-factor can also be used to determine compliance with performance approaches. Alternatively, the NFRC rated U-factor may be used if it meets the U-factor required in the prescriptive package. However, for greenhouse windows or skylights the SHGC must meet the

requirements shown in the prescriptive packages or the SHGC used to show compliance in the performance approach. To meet the SHGC for greenhouse windows the proposed fenestration may use the NFRC rated SHGC or the default SHGC from Table 116-B if the area weight averaged SHGC of the greenhouse window plus other fenestration in the proposed design meets the values used for compliance. Skylights may use one of three methods for determining the proposed SHGC; NFRC rated SHGC, default SHGC from Table 116-B, or an SHGCfen calculated from the manufacturer's center of glass SHGC (SHGCc) using the following equation.

SHGCfen = 0.08 + 0.86 x SHGCc

Note, in new construction that is not associated with an existing building, the actual U-factor of fenestration products must be used for compliance documentation/calculations. For greenhouse windows, the window area is the rough opening.

Example 8-8

Question

Where do radiant barriers need to be installed when using the prescriptive Package D or meeting the performance standards where no credit is taken for retrofitting a radiant barrier in the existing house?

Answer

The radiant barrier only needs to be installed on the underside of the roof assembly associated with the addition. This is the same as entirely new buildings.

Example 8-9

Question

If I am doing an alteration to move an existing window to another location, does it need to meet the prescriptive requirements?

Answer

Once you move the window to a location where a window did not previously exist, it must meet the prescriptive requirements, because it is added fenestration rather than a window repair.

Example 8-10

Question

An existing building has all single-pane windows. All of the windows will be replaced, and one wall will be altered to have French doors in place of an existing window. What requirements apply?

Answer

The Package D prescriptive requirements apply to all new windows. All of the installed fenestration must also meet applicable mandatory measures.

Example 8-11

Question

An existing building has all single-pane, metal-frame windows. A proposed remodel will replace all the windows; no other work is being done as part of the remodel. What applies?

Answer

The Package D prescriptive requirements apply to all new windows. All of the installed fenestration must also meet applicable mandatory measures.

Example 8-12

Question

An existing building has all single-pane, wood-frame windows. Two double-pane, metal-frame greenhouse windows will be added as part of a remodel. How should the greenhouse windows be treated?

Answer

Since greenhouse windows (and some skylights) add conditioned volume, but do not add conditioned floor area, this remodel is considered an alteration rather than an addition. For the purposes of alterations, any dual-glazed greenhouse windows or skylights installed as part of an alteration may be treated as though they comply with the U-factor requirements applicable to prescriptive alterations. However, the Package D SHGC requirement applies to these windows. All applicable mandatory measures must be met.

If the added window area (the rough opening area for greenhouse windows) is no greater than 50 ft2 then no fenestration area limits apply. However, if more than 50 ft2 of fenestration is added, then the Package D limit of 20% of floor area must not be exceeded for the whole building. Otherwise, the performance method must be used.

8.4 HVAC

The Standards apply to alterations of the heating and cooling system whether or not the alterations correspond to an addition to the building. This section describes the conditions where compliance is necessary and describes the corresponding requirements.

If the heating and cooling system is left unchanged as part of an addition or alteration, then compliance with the Standards is not necessary. Extension of an existing heating and cooling system, such as extension of a duct is not considered a change to the existing heating and cooling system therefore the existing heating and cooling system components are unchanged and do not need to meet the Standards requirements. However, the extensions of the duct systems must meet mandatory and prescriptive requirements that are described in the following Sections.

8.4.1 Mandatory Requirements

§152(b) 1

§152(b) 2

Any altered components of the heating and cooling system must meet the same mandatory requirements that apply to new construction. These mandatory requirements include the following as appropriate:

- Equipment efficiency (enforced at time of sale)

- Heat pump controls
- Heating and cooling load calculations
- Standby losses and pilot lights
- Pipe insulation and refrigerant line insulation
- Minimum duct insulation
- Duct connections and closures
- Product markings for flexible ducts
- Dampers to prevent air leakage
- Protection of insulation
- Setback thermostat (in most cases)
- Fireplaces, decorative gas appliances, and gas logs (infiltration and pilot light related requirements)

See Chapter 4 for more details.

8.4.2 Prescriptive Requirements

The prescriptive requirements for HVAC alterations are described in this section. The performance method, as described later in this chapter, is an alternative to these prescriptive requirements.

Duct Sealing and Insulation

§152(b) 1 D and §152(b) 1 E

A significant new requirement in the 2005 Standards is that an existing duct system must be sealed and verified by a HERS rater when portions of the heating and cooling system are altered. The requirement applies in climate zones 2, 9, 10, 11, 12, 13, 14, 15, and 16. The ducts must be sealed (as described later below) under *any* of the following circumstances:

- An air handler is installed or replaced.
- An outdoor condensing unit of a split system air conditioner or heat pump is installed or replaced.
- A cooling or heating coil is installed or replaced.
- A furnace heat exchanger is installed or replaced.

When more than 40 ft of new or replacement ducts are installed in unconditioned space, in addition to the duct sealing requirements described above, the ducts must also meet the duct insulation requirements of Package D, §151 (f) 10.

There are a few cases where this duct sealing and verification are not required. These exceptions include the following.

- Ducts that have already been sealed, tested and certified by a HERS rater.
- Duct systems with less than 40 linear ft of duct in unconditioned spaces.
- Duct systems that are insulated or sealed with asbestos.

The requirements apply to the duct system that is affected by any one of the alterations listed above. If a residence has more than one duct system, only the ducts connected to the altered equipment need to be sealed and verified.

For completely new duct systems in existing residences, the leakage requirement is the same as described in Chapter 4 for new air distribution systems. In climate zones 2, and 9 through 16, for existing duct systems or when new ducts are being added as an extension of an existing duct system, the sealing requirements are different. There are four options to showing compliance for existing duct systems:

- Total leakage is less than 15% of fan airflow.
- Leakage to the outside is less than 10% of fan airflow.
- Leakage is reduced by more than 60% compared to before the alteration and a smoke test shows that all accessible leaks have been sealed.
- If the three leakage targets cannot be met, then compliance can be achieved by sealing all accessible leaks verified by a HERS rater inspection.

HERS field verification is required for all options listed above. For options 1,2, and 3, verification can be accomplished through sampling as described in ***Sampling for Additions or Alterations*** below. For option 4, sampling is not allowed; a certified HERS rater must do the visual inspection and the smoke test on every house that chooses option 4.

Since test equipment must be set up for the first three options, it may be most efficient to test and record the results for the existing system and then attempt to meet each option sequentially until compliance is achieved.

Instead of meeting the duct sealing requirements, a high efficiency air conditioner meeting the SEER and EER efficiencies shown in Table 8-3 may be installed.

Accessibility

§152(b)1D(ii)(c) and §152(B)1D(ii)(d) require a demonstration that all accessible duct leaks have been sealed. Accessible is defined as having access thereto, but which first may require removal or opening of access panels, doors, or similar obstructions. For example, if walls and drywalls have to be moved or removed, or if the ducts are buried under insulation, or if a joint in the duct system is in too small a space between framing member for someone to be able to get to the joint to seal it, then the duct system is not accessible. All other duct systems must meet the duct sealing requirements of the Standards. Note that

only the inaccessible portions of the duct systems do not have to be sealed; all other parts of the duct system that are accessible must still be sealed.

A smoke test may be employed to locate the leaks and to assess whether or not they are accessible.

Refrigerant Charge Measurement

§152(b) 1 C

When new or replacement split system air conditioners or heat pumps are installed in existing buildings, a refrigerant charge measurement or a TXV is required in certain climate zones. This requirement applies not only when a completely new air conditioning system is installed but also when components of an existing air conditioning system, such as the outdoor condensing unit or the indoor cooling coil are replaced. The refrigerant charge measurement and TXV require verification by a HERS rater (verification can be accomplished through sampling as described in ***Sampling for Additions or Alterations*** below). The refrigerant charge measurement/TXV requirements are described in more detail in Chapter 4. The affected climate zones are 2 and 8 through 15.

Sampling for Additions or Alterations

When compliance for an addition or alteration requires diagnostic testing and field verification, the building owner may choose for the testing and field verification to be completed for the dwelling unit alone or as part of a sample of dwelling units for which the same installing company has completed work that requires testing and field verification for compliance. The building owner or agent of the building owner (which may be the contractor) shall complete the applicable portions of a Certificate of Compliance (CF-1R). The HERS provider shall define the group for sampling purposes as all dwelling units where the building permit applicant has chosen to have testing and field verification completed as part of a sample for the same installing company. The group shall be no larger than seven. The installing company may request a smaller group for sampling. Whenever the HERS rater for the group is changed, a new group will be established. Initial Field Verification and Testing shall be completed for the first dwelling unit in each group. Re-sampling, Full Testing and Corrective Action shall be completed if necessary as specified by Residential ACM Manual Section 7.5.3.

Field verification may be completed by an approved Third Party Quality Control Program as specified in Residential ACM Manual section 7.7. The group for sampling purposes shall be no larger than thirty when a Third Party Quality Control Program is used. The Third Party Quality Control Program may define the group instead of the Provider. When a Third Party Quality Control Program is used, the CF-6R (submitted by the contractor) shall document that data checking has indicated that the dwelling unit complies. The building official may approve compliance based on the CF-6R on the condition that if sampling indicates that re-sampling, full testing and corrective action is necessary, such work shall be completed.

requirements described in Chapter 4 (Building HVAC Requirements) of this manual.

Compliance with these measures requires verification by a HERS rater. However, there are three alternative compliance options as shown in Table 8-3 that take the place of duct sealing and possibly refrigerant charge measurement.

The table provides three options as alternatives to duct sealing in the indicated climate zones as described below:

The first option requires an efficiency upgrade of the furnace only. It requires installation of a furnace with an AFUE of 0.92.

The second option is an efficiency upgrade on the cooling side only. It requires the installation of high SEER & EER equipment, plus TXV (or refrigerant charge measurement instead of TXV), and Increased Duct Insulation.

The third option requires an efficiency upgrade in both heating and cooling equipment. It requires installation of a high SEER & EER unit with TXV (or refrigerant charge measurement instead of TXV), plus 0.92 AFUE (or 0.82 AFUE plus Increased duct Insulation instead of 0.92 AFUE).

In climate zone 8, to avoid TXV or refrigerant charge measurement requirements, a SEER 14 air conditioner or a 0.82 AFUE furnace may be used.

Table 8-3 – Alternatives to Duct Sealing

	Option 1	Option 2	Option 3
Climate Zone	0.92 AFUE	SEER-14 & EER-12, with either TXV or refrigerant charge measurement, plus Increased Duct Insulation	SEER-14 & EER-12 with either TXV or refrigerant charge measurement, plus either 0.92 AFUE or 0.82 AFUE with Increased Duct Insulation
CZ2	Yes	No	Yes
CZ9	No	No	Yes
CZ10	No	Yes	Yes
CZ11	No	No	Yes
CZ12	Yes	No	Yes
CZ13	No	Yes	Yes
CZ14	No	No	Yes
CZ15	No	Yes	Yes
CZ16	Yes	No	Yes

1. Increased duct insulation refers to an additional R-4 insulation wrap on existing ducts and R-8 duct insulation for all new ducts.2. Package systems may use Option 2 or 3 without meeting the requirement for a TXV (or refrigerant charge measurement)
Note - There are no duct sealing requirements in climate zones 1 and 3-8.

Setback Thermostat

§152(b) 1 C

If the thermostat is to be replaced as part of the alteration, then a setback thermostat is required as described in Chapter 4.

Setback Thermostat

§152(b) 1 C

If the thermostat is to be replaced as part of the alteration, then a setback thermostat is required as described in Chapter 4.

Fuel Switching

§152(b) 1 C

For prescriptive compliance, new electric resistance heating systems are prohibited in alterations unless the system being replaced is an electric resistance heating system. If the existing system is gas, propane or LPG, then new electric resistance systems are not permitted. However, changing from a gas, propane or LPG space heating system to an electric heat pump is allowed as long as the heat pump efficiency meets minimum efficiency standards, and the heat pump installed size is shown to result in no more TDV energy use than the standard design heat pump using the performance method.

Table 8-4 – Acceptable Replacement Heating System Fuel Source(s)

Existing Heating System Fuel Source	Acceptable Replacement Heating System Fuel Source(s)
Electric	Electric, natural gas, or equipment with efficiency equal to or better than existing system*
Natural gas	Natural gas, or equipment with efficiency equal to or better than existing system* or a heat pump with equal or lower TDV energy use than a standard design system.
LPG	Liquefied petroleum gas, natural gas, or equipment/ system with efficiency equal to or better than existing system* or a heat pump with equal or lower TDV energy use than a standard design system.
*Proof that equipment has an efficiency that is equal to or better than the existing system can be demonstrated by an approved compliance program or other approved alternative calculation method to compare the TDV energy use of the existing system to the proposed system.	

Example 8-13

Question

I would like to replace my outdoor units in my existing house in climate zone 12 without changing the indoor unit. Can I use Table 8-3 to avoid duct sealing?

Answer

No, without changing the outdoor unit along with a matching indoor unit, it is not possible to achieve EER of 12 that is required by Table 8-3. Without changing the indoor unit as well as the outdoor units, duct sealing is the only prescriptive alternative.

Example 8-14

Question

Is HERS verification required if I choose an alternative listed in Table 8-3 to avoid duct sealing in an alteration?

Answer

Yes, HERS verification is required to verify EER of 12 and existence of TXV. However, this should be simpler verification than duct sealing.

Example 8-15

Question

How could I use Table 8-3 to avoid duct sealing if I am replacing my air conditioning unit in climate zone 11?

Answer

Based on Table 8-3, the only option available to avoid duct sealing is Option 3, the combination heating and cooling option. You must install a SEER 14 & EER 12 (note that your unit must meet both SEER of 14 AND EER of 12) equipped with a TXV (or refrigerant charge), plus a 0.92 AFUE furnace. Instead of a 0.92 AFUE furnace, you may install a 0.82 AFUE furnace and add R-4 insulation to your existing ducts and install R-8 insulated new ducts. A HERS rater must verify the TXV and the EER of 12. Note that to achieve the EER of 12 the outdoor unit must be matched with a proper indoor unit.

Example 8-16

Question

If the house in the example above is located in climate zone 13, what options do I have to avoid sealing ducts?

Answer

In climate zone 13, you have two options; Option 2, the cooling option and Option 3, the combination heating and cooling option. You can choose either option to avoid duct sealing.

Option 3 is similar to the answer in the example above.

Under Option 2, you must install a SEER 14 & EER 12 (note that your unit must meet both SEER of 14 AND EER of 12) equipped with a TXV (or airflow measurement), add R-4 insulation to your existing ducts and install R-8 insulated new ducts. A HERS rater must verify the TXV and the EER of 12. Note that to achieve the EER of 12 the outdoor unit must be matched with a proper indoor unit.

Example 8-17

Question

I have an existing electric furnace and am adding a new bedroom. Can I extend the existing ducts to the new room and use the existing furnace?

Answer

Yes. §152(b)1C generally requires that gas heating be used but allows the existing fuel type, in this case electric resistance to be extended. The existing furnace must have adequate heating capacity to meet CBC requirements for the additional space. Duct requirements apply if more than 40 ft of ducts are added.

Example 8-18

Question

I am adding a bedroom to an existing house. I would like to heat the room with an electric resistance baseboard heater rather than extend the existing ductwork to reach the new space. Is this allowed?

Answer

If the existing system is electric resistance, then the room may be heated with an electric resistance baseboard heater. (§152(a) Exception 4). If the system serving the existing house is gas or LPG, then one of those system types is required. Alternatively, the existing system may be extended to serve the addition, if there is adequate capacity to meet the CBC requirement.

Example 8-19

Question

My central gas furnace stopped working. Since it is about 30 years old I decided to get a new more efficient unit rather than repair the existing one. What are the requirements?

Answer

Mandatory requirements apply to the components being replaced. The furnace, of course, must meet minimum efficiency requirements, but all systems sold in California should already meet the minimum. If the thermostat is being replaced then the new thermostat must be a setback type that meets the requirements described earlier in this chapter. Any new ducts must meet insulation and construction requirements.

The new heating unit must also be a natural gas unit (or a heat pump that provides equal or better TDV energy performance). An electric resistance furnace is not an option.

If the home is located in climate zones 2, 9, 10, 11, 12, 13, 14, 15, or 16, then the most significant requirement is that either duct sealing and testing is required or other specific measures described in Table 4-10 are required.

Example 8-20

Question

As part of an upgrade in an existing house, one of the ducts is being replaced because of deterioration of the insulation and jacket. What requirements apply to the replacement duct?

Answer

This is an alteration since no new conditioned space is being added. The mandatory measures for ducts apply. If more than 40 ft of duct is replaced, Package D duct insulation and sealing requirements also apply which require diagnostic testing of the whole duct system.

Example 8-21

Question

An up-flow air-handling unit with a furnace and air conditioning coil is located on a platform in the garage of an existing house. The platform is used as a return air plenum. The air-handling unit is being replaced and the platform is being repositioned to the corner of the garage (three ft away from the current location). What requirements apply to this alteration?

Answer

The mandatory requirements apply to this alteration. In particular, §150 (m) prohibits raised platforms or building cavities from being used to convey conditioned air (including return air and supply air). When the platform is relocated, it is being altered, and the mandatory requirement applies. A sheet metal or other suitable duct must be installed to carry the return air to the replaced air handler. This requirement would not apply if the platform were not being altered.

In addition, the prescriptive duct sealing requirements apply per §152(b) because the air handler is being replaced, unless one of a few exceptions applies.

Example 8-22

Question

I have a residential building that was made in the 1920's. It has a freestanding gas furnace and I want to change it to an electric wall heater. Is this permitted?

Answer

No. The Building Energy Efficiency Standards §152 (b) B (ii) states that the new space-conditioning system be limited to natural gas, liquefied petroleum gas, or the existing fuel type unless it can be demonstrated that the source energy use of the new system is more efficient than the existing system. For your situation you would have to use gas or a heat pump for compliance.

8.5 Water Heating

8.5.1 Replacement Water Heaters

152(b) 1 F

Replacement water heaters must be either gas, LPG or the existing fuel type. The only exceptions are when it can be demonstrated that the TDV energy use of the new system is less than the existing system or when the water heater is being replaced as part of an alteration that is complying via the performance method. In other words, additional calculations are required if the replacement water heater is not either gas, LPG or the existing fuel type. The main intent of

this requirement is to restrict the switch from gas to electric resistance water heaters.

When a water heater is replaced, then the mandatory requirements also apply to the water heater itself as well as any other components that are replaced. The water heater must be certified by the Energy Commission for minimum efficiency. New pipes must be insulated wherever insulation is required by the mandatory requirements.

8.5.2 Additions

§ 152(a), Exception No. 3

If an addition increases the number of water heaters serving a dwelling unit, then compliance for the addition may be determined using any of the compliance approaches under certain conditions. The "addition alone" compliance may be used for one additional water heater if either:

- The additional unit is a 50 gallon or less, gas storage or gas instantaneous, nonrecirculating water heater with an EF of 0.58 or higher as defined in the Prescriptive Requirements section of Chapter 5,
- The home does not have natural gas available and the additional water heater is a 50-gallon or less electric water heater with an EF of 0.90 or greater, or
- A water-heating system determined by the Executive Director of the Energy Commission to use no more energy than the one specified in the first bullet above; or if no natural gas is connected to the building, a water-heating system determined by the Executive Director to use no more energy than the one specified in the second bullet above.

If either of the first two conditions is met, water heating calculations are not required with any of the compliance approaches, and no credit is allowed or penalty taken. Computer compliance calculations are used to determine the alternative described in the third bullet.

In order to receive credit for a water heating alteration that exceeds minimum efficiency requirements, or to use a water heater that does not meet either of the two conditions listed above, two options are available. The existing-plus-addition performance compliance method or the whole building compliance approach may be used. See the computer program vendor's compliance program supplement.

Example 8-23

Question

An existing 1,500 ft^2 single family residence is getting a 500 ft^2 addition. A new 50-gallon gas water heater will replace the existing water heating system. How do the water heating requirements apply?

Answer

Since this is an alteration to an existing water heating system, no water heating calculations are required, but the mandatory measures apply. The water heater must have an EF of 0.58 or higher, or R-12 insulation wrap. The first 5 ft. of hot and cold pipes must be insulated. Building energy compliance for the addition may be demonstrated for either the addition alone or for the existing-plus-addition.

Example 8-24

Question

An existing 2,000-ft^2 single family residence has one 50-gallon gas water heater, and a 600 ft^2 addition with a new instantaneous gas water heater is proposed. How does this comply?

Answer

When there is an increase in the number of water heaters with an addition, the standards allow addition alone compliance in certain circumstances. Since this is an instantaneous gas water heater, if it can be demonstrated that it uses no more energy than a 50-gallon gas non-recirculating storage tank (see the Prescriptive Requirements section above), then it may be installed. Since §151(f)(8)(B) declares a single instantaneous gas water heater to be equivalent to the 50-gallon storage water heater, then no water heating calculations are required. Mandatory measures apply.

Other alternatives are to show compliance with existing-plus-addition or whole building compliance.

Example 8-25

Question

Existing single family residence with one electric water heater; a 500 ft^2 addition with a 30-gallon electric water heater is proposed. Does this comply?

Answer

When there is an increase in the number of water heaters with an addition, the Standards allow addition alone compliance in certain circumstances. If this residence does not have natural gas connected to the building and the new water heater has an EF of 0.90 or greater, the system automatically complies. No water heating calculations are submitted. If it does have natural gas connected, then the new water heater must be natural gas, or calculations are required to show the proposed water heater would use no more TDV energy than a 50 gallon natural gas water heater with an EF of 0.58.

Example 8-26

Question

A single family residence with one gas water heater is replacing the water heater with a new gas water heater. How does this comply?

Answer

This system must comply with the mandatory requirements for alterations. This includes a certified water heater and pipe insulation on the first five ft of hot and cold water pipes. Since compliance with the annual water heating budget is not required, no water heating calculations are required.

Example 8-27

Question

The owner of a residential building is replacing a gas water heating system with an electric water heating system. Does this comply?

Answer

In addition to complying with mandatory requirements, changing from gas to electric is prohibited unless it "can be demonstrated that the TDV energy use of the new system is more efficient than the existing system." This is unlikely to be the case, therefore one of the performance compliance options is required. Either the whole building approach or the existing + addition + alteration approach may be used. These approaches could be used to take credit for improvements to the building being made to offset the water heating changes.

8.6 Lighting

All of the lighting requirements apply to both additions and alterations as appropriate. These are all mandatory requirements; therefore they apply regardless of whether the prescriptive or performance approach is followed for the other building components. See Chapter 6 for information about the lighting requirements.

The requirements for new additions and new lighting systems are the same as new construction that is described in Chapter 6 of this compliance manual.

Alteration requirements apply to all altered lighting components in all areas of the house that are covered under §150 (k). Luminaires or components that are not altered do not need to meet the requirements of the Standards.

Example 8-28

Question

I am doing minor renovations to my kitchen that has six recessed incandescent cans and I am adding a new luminaire over the sink. Does this luminaire have to be a high efficacy luminaire?

Answer

Yes, all new luminaires must be high efficacy until at least 50% of the total lighting wattage comes from high efficacy luminaires.

Example 8-29

Question

In the kitchen above I am replacing one of the recessed luminaires. Must the new luminaire be high efficacy?

Answer

Yes, the new luminaire is the altered component and must be high efficacy. In fact, all luminaire replacements must be high efficacy until at least 50% of the total lighting wattage comes from high efficacy luminaires.

Example 8-30

Question

I am completely remodeling my kitchen and putting in an entirely new lighting system. How do the Standards apply to this case?

Answer

At least half the lighting watts must be high efficacy luminaires. This is treated like new construction.

Example 8-31

Question

I am replacing my incandescent bath bar in the bathroom. Must the new luminaire meet the Standards requirements?

Answer

Yes, in this case, the bath bar is the altered component and must meet the Standards requirements of §150 (k), which requires high efficacy luminaires in the bathrooms. The alternative would be to use the bath bar in conjunction with a “manual-on” occupant sensor.

8.7 Performance Method for Additions and Alterations

§152(a)2

The performance compliance method is an alternative to the prescriptive requirements described in the previous sections. If the performance compliance approach is used, then the mandatory requirements still apply but the prescriptive requirements such as fenestration area limits, duct sealing, and refrigerant charge measurement may or may not be necessary depending on the overall performance of the addition or alteration.

For additions, there is a choice of three performance approaches: the whole building, the addition alone and the addition in combination with the existing house.

8.7.1 Whole Building Approach

The whole building method is usually the most stringent and is used only for major rehabilitations of existing houses that also involve an addition. Under this approach the existing building and addition are modeled together as if they were a new building. This approach may also be used for alterations. When whole building compliance is used, all components that are in the existing structure must comply with mandatory minimums or the allowed exceptions.

8.7.2 Addition Alone Approach

The "addition alone" option is similar to showing compliance for a new building.[8] Analyzing additions alone works well for relatively large additions with moderate window and skylight area. If an addition alone does not comply with the Standard*s*, improvements to the existing building may be necessary, and the Existing + Addition + Alteration method must be used.

Addition Alone method cannot be used when alterations to the existing building are required to compensate for failure of an addition to comply alone or when alterations to the water heating system are proposed. In these events, either the Whole Building or the Existing + Addition + Alteration approaches can be used.

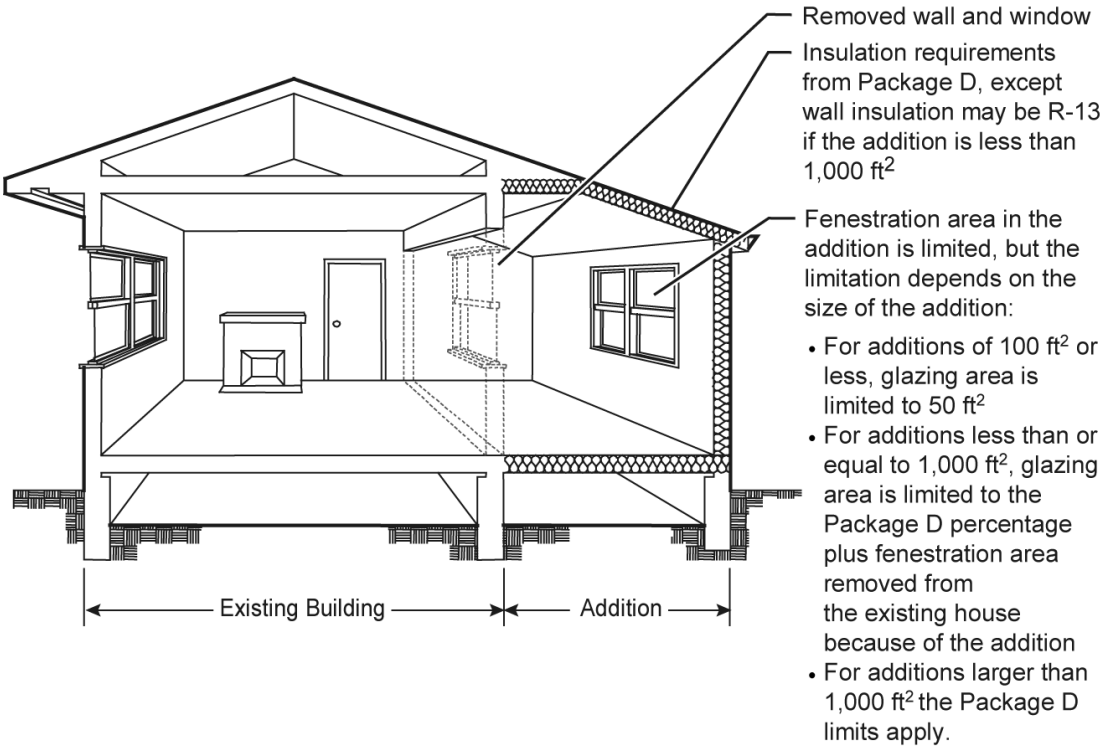

Figure 8-2 – Addition Alone Performance Compliance Approach

Example 8-32

Question

When using the performance approach for the addition alone, do the TXV or refrigerant charge and airflow measurement in §151(f) need to be met for central split system air conditioners serving an addition?

Answer

If existing equipment is used to serve the addition, this requirement does not need to be met as specified by Exception 4 to §152(a). For performance compliance in climate zones that require

[8] When modeling additions alone, the number of dwelling units is input as the ratio of the addition conditioned floor area to the entire existing house plus addition conditioned floor area. This is needed in order for the internal gains, occupant density and other modeling assumptions to be properly prorated.

a TXV or refrigerant charge and airflow measurement in Package D, a hypothetical standard design SEER split system with this credit would be modeled in both the standard and the proposed designs, resulting in neither credit nor penalty related to this feature.

If a new central split system is installed to serve the addition, it must either:

- Meet the TXV or refrigerant charge and airflow measurement in order to comply with Package D
- Meet or exceed the efficiency levels in Table 4-10 (to avoid the diagnostic testing and field verification)
- Meet the criteria modeled for the proposed design in the performance approach.

8.7.3 Existing + Addition + Alteration Approach (also applies to Existing + Alteration when there is no Addition)

For additions, the most flexible compliance method is to consider the entire existing building along with the addition (Existing + Addition + Alteration)[9]. The rules for this method are documented in the program vendor's compliance program supplement. Compliance is shown using an approved computer program. Through this method, credit may be taken for energy efficiency features added to the existing building. However, when credit is taken for a proposed improvement to the existing building, the improvement must either meet or exceed the requirements of §152(b)1 for that component or another alteration(s) must be made to the existing building, which exceeds the requirements of § 152(b)1 that saves the additional energy necessary to at least make up for the alteration(s) that fail to meet § 152(b)1. Alternatively, when there is an addition, the addition could be designed to exceed prescriptive requirements to offset proposed existing house alterations that do not meet prescriptive requirements.

In general the following rules apply to Existing + Addition + Alteration:

- Altered fenestration components must meet or exceed the requirements of § 152 (b) 1 A and B in order to result in an energy "credit" in the performance calculation. Altered fenestration components not meeting the requirements of §s 152 (b) 1 A and B will result in an energy "penalty" in the compliance calculation.
- For envelope alterations, insulation must be upgraded to meet the mandatory minimums of §150 (c) for wall insulation, §150(d) for floor insulation, and §150(a) and §118 (d) for ceiling/roof insulation Note that the requirements of §118 (d) are always more stringent than §150(a).
- Space conditioning equipment must meet the requirements of §152(b)1C (see Section 8.4, HVAC, of this chapter). The

[9] This method may also ~~is~~ be used whenever an alteration is made to existing buildings, whether or not there is an addition to the building at the same time.

mandatory measures must be met. The failure to meet non-mandatory requirements of §152(b)1C, which includes refrigerant charge or TXV, will result in an energy "penalty" in the compliance calculations.

- Duct alterations must meet the requirements of §152(b)1D and §152(b)1E (see Section 8.4, HVAC, of this chapter). The mandatory measures must be met. The failure to meet non-mandatory requirements of §152(b)1D and §152(b)1E, will result in an energy "penalty" in the compliance calculations.
- Alterations to service water heating systems must meet the requirements of §152(b)1F (see Section 8.5, Water Heating, of this chapter). The mandatory measures must be met. The failure to meet non-mandatory requirements of §152(b)1F will result in an energy "penalty" in the compliance calculations.

If the altered component meets or exceeds the requirements of § 152(b)1, then there will be an energy credit for the difference between the proposed design and the standard design, where the standard design is based on the existing condition of that component (the existing condition may be based on documentation at the time of application for the alteration permit or on the vintage table in Appendix B). If the altered component does not meet the requirements of § 152(b)1, there will be an energy penalty for the difference between the proposed design and the standard design, where the standard design is based on having that component meet the requirements in § 152(b)1.

Alterations may include previous improvements that were made to the building after original permit (when the existing building was first constructed). The upgraded efficiency value of that component will be the proposed design and the standard design will be based on the vintage of the original building. The permit applicant must provide evidence that the previous improvements were made subsequent to the original construction of the building. Such evidence may involve receipt, signed statement from previous owners, or in case where previous owners are not available, signed statement of the current owner or other record.

Note that previous improvements that have been used to achieve compliance for previous additions and alterations should not be considered for compliance for subsequent additions and alterations. In this case the efficiency value of the previously altered component should be shown as the standard design. In this case, existing insulation and glazing that are to be considered as unchanged for the purposes of achieving compliance are modeled in both the standard and proposed designs as they presently exist when this can be ascertained, and modeled in both the standard and proposed design as vintage table values when existing conditions are not readily discernible. The compliance software performance program will use the modeled existing component values or the vintage table values to develop the Standard budget based on the information described above. For example, if a 1975 building in climate zone 3 was built with R-11 ceiling insulation and was subsequently upgraded to R-30, then the compliance software performance program would model the existing condition as R-13 consistent with the Vintage Table and model the proposed condition as

R-30 consistent with the previously made improvement. Consequently, the credit would be relative to the difference between R-13 and R-30.

Note that if in this example, had the ceiling insulation been upgraded to any value less than R-30, which is the mandatory requirement in §118(d) 1 for ceiling insulation in climate zone 3, the alteration would not have been eligible for any credits. Note that according to §151 (b), Opaque envelope insulation must meet the most stringent of the mandatory requirements of §118 (d)1and 150.

Example 8-33

Question

A 1,600-square-foot 1980 house that is in climate zone 12 is being renovated as follows: A 500-square-foot room will be added including 120 square feet of new glazing, a 200-square-foot wall and 100 square feet of old glazing will be removed, and the attic insulation in the existing portion will be upgraded to R-38. The new addition will be connected to the existing HVAC and duct system. If the performance approach is used to demonstrate compliance, how does the compliance software establish the standard and proposed designs?

Answer

You must refer to the compliance software documentation for the details of modeling using the existing plus addition plus alteration approach. In general, the standard design is established by the software based on vintage table values (or on actual existing conditions if those can be determined) for roof insulation, wall insulation, floor insulation, water heating energy factor, HVAC equipment efficiencies, and fenestration U-factors and SHGC values. This includes all features of the “existing” portion of the house before any renovations begin, including the wall and window areas that are to be removed. The standard design is modeled with sealed and tested ducts for any new duct that is extended to the new addition. This establishes the standard design, which determines the energy budget that is the basis for comparison with the proposed design to determine whether or not the project complies.

The proposed design for this project is based on the entire building after the addition and all alterations are completed. For example, in the “final building," 200 square feet of old wall and 100 square feet of old windows no longer exist, and therefore are not modeled. The final building has 500 square feet of new floor space and 120 square feet of new windows. The proposed design also includes the R-38 attic insulation alteration that was made to the existing portion of the house. The area of the final building is now 2,100 square feet (1,600 + 500, existing building plus addition). The remainder of the existing house that did not go through any alterations is modeled with the same vintage table values (or actual existing conditions) that are modeled for the standard design, including the HVAC system. All components of the addition portion of the building are modeled using the proposed design values (just like for any newly constructed building). Note that any new ductwork that is extended to the new addition must either be sealed and tested or modeled as untested, which would require the higher energy use to be made up through additional efficiency measures elsewhere in the building.

If the building does not pass, other components of the existing building and/or the addition may have to be improved to achieve compliance. For example, the water heater or the HVAC equipment in the existing portion of the house may be upgraded to achieve additional credits towards compliance. Sealing the ducts in the existing portion of the house results in a relatively large compliance credit. If other components of the existing building are improved

(altered), then they must meet the requirements for those components in § 152 (b) 1 to earn compliance credit. In the addition, higher performing windows and higher levels of roof and wall insulation may also be used to achieve compliance.

Example 8-34

Question

For the building in the question above, how does the compliance software establish the proposed design if the addition is served by a new SEER 13 packaged gas/electric unit with a 0.82 AFUE?

Answer

This is similar to the example above, except the addition is now served by a SEER 13/AFUE 0.82-packaged unit instead of simply extending the ductwork that serves the existing part of the house to the addition. In this case, similar to the standard design, the existing portion of the house must be modeled with the efficiencies of the existing HVAC equipment; these may be obtained either from the vintage tables or the actual existing conditions if those can be determined. The addition must be modeled with SEER 13 and 0.82 AFUE. You must refer to the compliance software documentation for modeling details.

Example 8-35

Question

For the 1980 building in the examples above, an operable single pane metal window is replaced with a 0.65 U-factor window. Does this alteration result in a compliance credit? How about the case where the existing window is replaced with a window that has a U-factor of 0.40?

Answer

§ 152 (b) 2 B states that to get compliance credit for any alterations in the existing building, the altered components must meet all applicable mandatory and prescriptive requirements specified in § 152 (b) 1 for that component. From the vintage tables, the operable single pane window has a U-factor of 1.28. The prescriptive requirement specified in § 152 (b) 1 for window U-factor in climate zone 12 is 0.57.

When the existing window is replaced with a window with a U-factor of 0.65, which does not meet the mandatory and prescriptive requirements for that climate zone (§ 152 (b) 1), there is a compliance penalty. The standard design for the window in this case is the 0.57 U-factor specified in § 152 (b) 1, while the proposed design is the 0.65 U-factor. So the penalty would be the difference between 0.57 and 0.65.

If on the other hand, the existing window is replaced with a window that has a U-factor of 0.40 (which meets the requirements of § 152 (b) 1), then the alteration will be eligible for a large compliance credit. The standard design for the window in this case is the 1.28 U-factor from the vintage table, while the proposed design is the 0.40 U-factor. So the credit would be the difference between 1.28 and 0.40.

Although this example describes a window alteration, the same principles apply to other building systems, such as other building envelope components as well as HVAC and water heating equipment.

Example 8-36

Question

An addition of 590 ft^2 is being added to an existing 2,389-ft^2 single family house. How do you demonstrate compliance using the existing-plus-addition method?

Answer

This process requires the following steps:

Collect information about the existing building.

Enter the information about the addition and the existing building into the compliance program, identifying those features that are existing and unchanged, those that are existing and altered, and those that are new. Proper identification of each of these features is critical to determining compliance. Analyze this set of input data with the compliance program to determine if compliance is achieved.

Consult the vendor's compliance supplement to determine how to model existing plus addition plus alteration. Note that alterations to the existing building must meet the efficiency levels described in §152 before there will be credit available from the changes to the existing building that can be used for changes to efficiency measures in the addition.

Example 8-37

Question

When using the existing-plus-addition performance approach, do the TXV or refrigerant charge and airflow measurement in §151(f) need to be met for central split system air conditioners serving an addition?

Answer

If existing equipment is used to serve the addition, this requirement does not need to be met as specified by Exception 4 to §152(a). For performance compliance in climate zones that require a TXV or refrigerant charge and airflow measurement in Package D, a hypothetical standard design SEER split system with this credit would be modeled in both the standard and the proposed designs, resulting in neither credit nor penalty related to this feature.

If a new central split system is installed to serve the addition, it must meet the requirements of §152 (b) 1 C where installation of a new air conditioner to serve both the existing house and the addition is considered an alteration, and must meet the requirements for diagnostically tested refrigerant charge measurement or install a field verified TXV. The requirements of §152 (b) 1 E must also be met.

Example 8-38

Question

When using the existing-plus-addition performance compliance method, can credit be gained by installing a TXV or doing refrigerant charge measurement on the existing central split system air conditioner in the existing house?

Answer

Yes, the same requirements for the TXV or refrigerant charge and airflow measurement for a new central split system air conditioner must be met, including HERS rater verification. The credit is offered through the performance method, which adjusts the efficiency of equipment,

depending on whether or not the refrigerant charge and airflow have been diagnostically tested.

Example 8-39

Question

When using the existing plus addition performance method, can compliance credit be gained by sealing the existing ducts when it was not required for prescriptive compliance?

Answer

Yes. The standard design must be selected as either “untested duct systems in homes built after June 1, 2001” or “untested duct systems in homes built prior to June 1, 2001.” If the entire duct system is designed and tested to have a leakage less than 6% and is diagnostically verified by a HERS rater, then significant compliance credit may be available. See the discussion of the performance approach in the text above.

Example 8-40

Question

Where do radiant barriers need to be installed when using the performance approach where no credit is taken for retrofitting a radiant barrier in the existing house?

Answer

The radiant barrier only needs to be installed on the underside of the roof assembly associated with the addition.

Example 8-41

Question

When using the existing plus addition performance compliance method, can credit be gained by installing a radiant barrier in the existing house attic? If so, where does the radiant barrier need to be installed?

Answer

Yes, installing a radiant barrier in the existing building will result in a credit relative to the standard design for existing buildings permitted (or constructed) prior to June 1, 2001. The radiant barrier must be installed over the entire attic/roof area including gable walls. If there are roof/ceiling assemblies where it is not possible to reach the underside of the roof, such as roof/ceiling assemblies using enclosed rafters which are not proposed to be exposed as part of the project, the radiant barrier cannot be properly installed and compliance credit is not possible.

Example 8-42

Question

I am adding a room to an existing building. I am upgrading a single-pane clear glass window as part of an alteration to an existing building in climate zone 12. Do I receive credit toward the addition compliance for installing a window with a U-factor of 0.65 and an SHGC of 0.50?”

Answer

No. There will be a penalty toward achieving compliance since the window is not as efficient as required by the prescriptive package for climate zone 12 which requires a U-factor of 0.57 and

an SHGC of 0.40. If fenestration meeting these requirements is installed, then the credit is available.

Example 8-43

Question

I am planning on installing R-25 insulation in the attic of an existing building in climate zone 13 that was built in 1970. Can I use this added insulation as a credit for trading with features in an addition?

Answer

No. When insulation is added to an attic, it must comply with the more stringent of §118 and §150. §150 requires a minimum R-19 ceiling insulation; however, §118 (d) sets a mandatory minimum for attic insulation of R-30 for climate zone 13. No credit is allowed until the mandatory minimum R-30 is achieved. However, if you install R-30 you are allowed to take credit for the difference between the R-30 and the vintage table U-factor for a 1970 building if the vintage is documented to the building department so the building department knows which vintage values are correct. For a 1970 building, the vintage ceiling insulation is equivalent to R-11.

Example 8-44

Question

I am planning on installing R-25 insulation in a vaulted ceiling without an attic space that was built in 1970. Can I use this added insulation as a credit for trading with features in an addition?

Answer

Yes. Since there is no attic space, the requirements of §118 do not apply. Therefore, to receive credit, the ceiling must meet the requirements of §150(a), the equivalent of R-19 ceiling insulation between wood-framing members. However, when you install R-25 you are allowed to take credit for the difference between the R-25 and the vintage table U-factor for a 1970 building if the vintage is documented to the building department.

9. INDEX

A

Additions, 8-1
AFUE (Annual Fuel Utilization Efficiency), 4-8, 4-15, 4-39, 4-40, 4-46
air conditioner, 1-7, 1-8, 1-19, 1-24, 2-5, 2-8, 2-17, 2-18, 3-23, 4-2, 4-3, 4-6, 4-11, 4-13, 4-14, 4-15, 4-16, 4-34, 4-44, 4-49, 4-50, 4-54, 7-2, 7-3, 8-1, 8-2, 8-13, 8-14, 8-15, 8-16, 8-26, 8-31
Airflow, 4-16, 4-52
alterations, 1-1, 1-2, 1-3, 1-8, 1-10, 1-11, 1-14, 1-16, 1-18, 2-1, 3-5, 3-49, 4-1, 6-1, 7-3, 7-13, 8-1, 8-2, 8-3, 8-4, 8-5, 8-8, 8-9, 8-10, 8-11, 8-12, 8-13, 8-14, 8-17, 8-18, 8-20, 8-21, 8-22, 8-23, 8-25, 8-27, 8-28, 8-31, 8-32
American Mechanical Contractors Association (AMCA), 4-44
annual fuel utilization efficiency (AFUE), 4-8, 4-15, 4-39, 4-40, 4-43, 4-46, 8-17, 8-19
area-weighted averaging, 3-12, 3-41
ASHRAE Standard 62, 3-58
authority having jurisdiction, 1-12, 1-13, 1-25, 2-6, 2-16, 2-17, 3-32, 3-48, 3-54, 3-69, 4-18, 4-19, 4-22, 7-5, 8-3
automatic, 3-54, 4-23, 4-35, 5-24, 6-13, 6-20, 6-21, 6-22

B

ballast, 6-3, 6-4, 6-5, 6-9, 6-14, 6-22
  electronic, 6-3, 6-5, 6-20, 6-23
ballasts
  dimming, 6-23
batt insulation, 3-32, 3-67
boiler, 1-19, 4-25, 4-36, 4-37, 4-39, 4-43, 5-2, 5-8, 5-12, 5-15, 5-16, 5-17, 5-18, 5-20, 5-24
branch circuit, 6-9
building
  existing, 1-3, 1-8, 1-14, 2-1, 3-27, 7-3, 7-13, 8-1, 8-2, 8-5, 8-6, 8-8, 8-9, 8-11, 8-12, 8-15, 8-25, 8-27, 8-28, 8-31, 8-32
  location data, 1-21
  new, 1-6, 1-16, 2-1, 2-4, 8-6, 8-11, 8-25
  orientation, 3-2
  type, 1-8, 1-9
building envelope, 1-1, 1-2, 1-5, 1-14, 1-15, 1-18, 1-19, 2-4, 2-8, 3-1, 3-13, 3-24, 3-26, 3-47, 3-55, 3-58, 3-59, 3-62, 3-63, 3-64, 3-65, 3-66, 3-67, 3-68, 3-69, 4-19, 4-45, 5-12, 5-16, 7-4, 8-5
  air leakage, 1-2, 2-20, 3-1, 3-4, 3-5, 3-6, 3-10, 3-38, 3-58, 3-59, 3-62, 3-63, 3-65, 4-17, 4-19, 6-17, 8-5, 8-13
  internal load, 7-8
  space-conditioning categories, 1-1, 1-2, 1-3, 1-6, 1-7, 1-8, 1-9, 1-10, 1-13, 1-14, 1-15, 1-16, 1-17, 1-20, 1-26, 2-1, 3-3, 3-4, 3-5, 3-7, 3-25, 3-40, 3-45, 3-49, 3-50, 3-58, 3-70, 4-7, 4-27, 4-37, 4-39, 4-46, 4-50, 5-8, 6-1, 6-2, 6-3, 6-4, 6-6, 6-14, 6-15, 6-20, 6-21, 7-7, 7-8, 8-4, 8-21, 8-23
  trade-off option, 3-3, 6-1
building location data, 1-21
building orientation, 3-2
building type, 1-8
building types
  explanation, 1-9

C

Certificate of Compliance, 2-2, 2-7, 7-5
climate data, 1-20
Climate Zones, 1-20
  SHGC, 3-14, 3-16
  U-factors, 3-14
coefficient of performance (COP), 4-6, 4-44, 4-45, 7-13
compact fluorescent, 6-3, 6-4, 6-5, 6-8, 6-9, 6-20, 6-21, 6-23
compliance documentation, 1-1, 1-20, 2-3, 2-4, 2-6, 2-7, 2-10, 2-12, 2-13, 2-14, 3-10, 3-24, 3-25, 3-46, 3-68, 4-7, 4-13, 4-48, 5-3, 5-17, 7-8, 8-11
condensation, 3-33, 3-66, 6-16
conditioned floor area
  explanation, 1-22
construction documents, 2-2, 2-3, 3-24
control device, 3-60
Controlled Ventilation Crawlspace, 3-53
Controls, 4-33
  Heat Pump, 4-6
  Recirculation System, 5-24
cooling efficiency, 4-43
curtain wall, 3-10

D

Dampers, 4-23
daylighting, 3-11, 3-12, 6-16
deadband, 5-24
design conditions, 1-2, 4-7, 4-12, 4-46
design professional, 2-13
directly conditioned, 7-9
distribution system, 1-5, 4-16, 4-36, 4-39, 4-40, 4-43, 4-46, 5-2, 5-3, 5-11, 5-12, 5-13, 5-14, 5-15, 5-16, 5-17, 5-18, 5-20, 5-21, 5-23, 7-2, 7-5, 7-12, 8-7, 8-14
doors, 1-12, 1-13, 2-5, 3-1, 3-4, 3-5, 3-6, 3-9, 3-10, 3-14, 3-26, 3-51, 3-59, 3-60, 3-61, 3-62, 3-64, 3-65, 3-68, 4-13, 4-35, 4-46, 4-47, 6-11, 6-14, 7-2, 7-3, 7-6, 8-2, 8-3, 8-10, 8-11, 8-14
duct
  construction, 4-23, 4-25, 4-27
  insulation, 4-1, 4-2, 4-16, 4-17, 4-22, 4-23, 4-26, 4-39, 8-13, 8-17, 8-20
  leakage, 2-10, 2-20, 3-63, 4-39, 4-44, 4-49
  sealing, 1-3, 2-5, 2-15, 2-19, 2-20, 4-16, 4-17, 4-24, 4-33, 4-39, 7-2, 8-13, 8-14, 8-16, 8-17, 8-18, 8-19, 8-20, 8-21, 8-25
Duct Sealing, 4-24
dwelling unit, 1-8, 1-15, 1-16, 1-20, 2-10, 2-11, 2-12, 2-14, 2-15, 2-18, 2-19, 2-20, 4-18, 4-34, 5-2, 5-3, 5-4, 5-11, 5-13, 5-14, 5-16, 5-17, 5-18, 5-20, 5-21, 5-22, 5-23, 6-1, 6-16, 7-5, 7-8, 7-9, 7-10, 8-21

E

East-facing. *See* building orientation
EER, 4-15, 4-45
EER requirements
  Large Central Air Conditioners, 4-9
electric resistance, 1-19, 4-2, 4-4, 4-6, 4-8, 4-34, 4-39, 5-9, 5-15, 5-22, 8-17, 8-19, 8-20, 8-21
electric resistance heat, 4-6, 4-34, 5-9, 5-22, 8-17
elevators, 1-14, 4-23
emittance, 3-34, 3-49, 3-50, 3-70
enclosed space, 3-44
energy cost budget
  climate data, 1-20
  compliance calculations, 3-24, 3-25, 3-71, 4-39, 4-40, 4-46, 7-10, 8-22, 8-27
  compliance form, 2-12, 4-1
energy efficiency ratio (EER), 1-8, 2-5, 2-17, 2-19, 4-2, 4-15, 4-44, 4-45, 4-49, 7-2, 7-3, 7-6, 7-12, 8-14, 8-17, 8-18, 8-19
Energy Factor, 5-5
  water heaters, 5-5
energy factor (EF), 5-4
Evaporative Cooler, 4-43
exhaust air, 4-18, 4-23
exhaust fan, 3-58, 3-66
existing equipment, 8-26, 8-31
existing system, 8-14, 8-17, 8-18, 8-20, 8-21, 8-23
exterior lighting, 6-15
external shading devices, 3-17, 3-21, 3-22

F

fan coils, 4-18, 4-19, 4-37, 4-39
fan power, 2-5, 2-17, 2-19, 4-15, 7-6
fenestration, 1-2, 1-3, 2-8, 3-2, 3-3, 3-4, 3-5, 3-6, 3-7, 3-8, 3-9, 3-10, 3-12, 3-13, 3-14, 3-15, 3-17, 3-18, 3-19, 3-21, 3-23, 3-24, 3-25, 3-55, 3-59, 3-68, 3-69, 3-70, 3-71, 3-72, 7-3, 7-4, 8-2, 8-6, 8-7, 8-8, 8-9, 8-10, 8-11, 8-12, 8-25, 8-27, 8-32
  area, 3-2, 3-3, 3-5, 3-10, 3-12, 3-17, 3-18, 3-23, 7-4, 8-6, 8-7, 8-9, 8-10, 8-12, 8-25
  skylight, 3-11, 3-12, 3-13, 3-15, 3-18, 3-46, 8-1, 8-10, 8-25
  vertical, 1-18, 2-2, 2-4, 3-3, 3-4, 3-5, 3-6, 3-8, 3-9, 3-10, 3-11, 3-13, 3-15, 3-16, 3-17, 3-18, 3-19, 3-20, 3-22, 3-23, 3-25, 3-55, 3-58, 3-59, 3-68, 3-70, 3-71, 3-72, 4-24, 4-44, 8-1, 8-2, 8-3, 8-9, 8-10, 8-11, 8-12, 8-25, 8-32
Fenestration Terminology, 3-69
F-factor, 4-41
field inspection, 2-10
Field Inspection, 2-4, 3-25
Field Verification, 2-5
fixture, 5-21, 5-23, 6-3, 6-20, 6-21
floor
  wood framed and other, 4-42
flue damper, 3-60, 3-61, 3-62, 4-7
fluorescent lamp, 1-7, 6-3, 6-5, 6-7, 6-11, 6-13, 6-20, 6-23
framing percentages, 5-6
freeze protection, 5-22
furnaces, 1-8, 3-46, 4-2, 4-3, 4-7, 4-8, 4-25, 4-33, 4-37, 4-39, 4-46, 7-12, 8-1, 8-2, 8-13, 8-16, 8-19, 8-20, 8-21

G

garage, 1-17, 2-9, 3-40, 3-42, 3-44, 3-59, 6-11, 6-22, 8-1, 8-20
gas water heaters, 4-4, 4-7, 5-2, 5-11, 5-12, 5-13, 5-14, 5-19, 5-20, 7-5, 8-22, 8-23
general lighting, 6-1, 6-10
gross wall area, 7-4
gutter, 3-55

H

habitable story, 1-8
health, safety and environmental codes, 2-3, 3-22, 3-26, 3-58, 4-46, 5-16, 6-12, 6-16
heat capacity (HC), 3-38, 3-51, 3-52
heat exchangers, 4-39, 4-40, 4-43, 5-15, 8-13
heat pump
  controls, 4-6
heat pumps, 1-19, 2-8, 2-17, 4-1, 4-3, 4-4, 4-6, 4-34, 4-44
  definition, 1-19
heating seasonal performance factor (HSPF), 4-6, 4-15, 4-40, 4-45
historic, 1-11, 1-12
HSPF, 4-6, 4-40, 4-45
HVAC
  compliance forms, 2-12, 3-24, 3-46, 3-67, 5-17
  equipment, 1-2, 1-15, 1-20, 2-8, 7-8
  exhaust hoods, 6-6
  load calculations, 2-7, 4-7, 4-12, 4-13, 8-13
  radiant heating systems, 4-6
HVAC controls
  freeze protection, 5-22
Hydronic Heating Systems, 4-36

I

Illuminating Engineering Society of North America, 6-6
indirectly conditioned space, 1-13, 4-36, 8-3
indoor air quality, 3-58, 3-66, 4-46
infiltration, 1-2, 1-18, 2-5, 3-1, 3-8, 3-10, 3-24, 3-25, 3-27, 3-51, 3-58, 3-59, 3-60, 3-62, 3-65, 3-66, 3-68, 4-19, 7-6, 8-13
input wattage, 6-3, 6-9
Installation Certificate, 2-4, 2-8
  Construction, 3-68
Insulation, 3-26, 3-30, 3-31, 3-32, 3-33
  Certication, 3-26
  Certified Materials Directory, 1-25
  Construction, 3-38
  Floor, 3-41
  Prescriptive Compliance, 1-7, 1-18
  Prescriptive Requirement, 3-29
  Roof, 3-27
  Urea Formaldehyde, 3-26
  Wall, 3-35
  Walls, 3-37, 3-38
interior shading, 3-14, 3-22

L

labeling of materials and equipment, 3-4, 3-6, 3-9, 3-10, 3-12, 3-25, 3-26, 3-63, 3-71, 5-20, 6-17, 6-20, 8-10
lamp
  compact fluorescent, 6-3, 6-4, 6-5, 6-8, 6-9, 6-20, 6-21, 6-23
  fluorescent, 1-7, 6-3, 6-5, 6-7, 6-11, 6-13, 6-20, 6-23
  incandescent, 6-3, 6-8, 6-9, 6-13, 6-20, 6-22, 6-23
  rated wattage, 6-4, 6-9
  reflector lamp, 6-4, 6-7
lighting
  building types, 1-17
  compliance forms, 2-12, 3-24, 3-46, 3-67, 5-17
  controls, 6-10
    daylighting, 3-11, 3-12, 6-16
  corridor, 7-9
  decorative, 6-18
  default wattages, 6-3, 6-8
  dining, 6-7, 6-13
  efficacy, 1-7, 6-1, 6-2, 6-3, 6-4, 6-5, 6-6, 6-7, 6-9, 6-10, 6-11, 6-12, 6-13, 6-14, 6-15, 6-16, 6-20, 6-22, 6-23, 8-24
  garages, 1-17, 2-9, 3-40, 3-42, 3-44, 3-59, 6-11, 6-22, 8-1, 8-20
  general, 6-1, 6-10
  offices, 1-9, 7-7
  prescriptive path, 1-9
  reference, 1-1, 1-8
  storage, 1-10, 4-37, 5-1, 5-3, 5-6, 5-7, 5-8, 5-11, 5-12, 5-13, 5-14, 5-15, 5-18, 5-19, 5-20, 6-6, 6-10, 8-21, 8-22

system, 1-11, 1-14, 2-8, 2-9, 6-9, 6-10, 6-20, 6-23, 8-1, 8-24
warehouse, 1-15
lighting power allowance
interior, 1-11
Log Homes, 3-51
low-rise residential, 1-1, 1-8, 1-10, 1-14, 1-15, 1-16, 1-17, 1-18, 1-20, 2-12, 3-4, 3-5, 3-7, 3-13, 3-47, 3-49, 3-50, 3-57, 4-43, 5-1, 6-2, 6-16, 7-8, 8-2
luminaire, 3-33, 6-2, 6-3, 6-8, 6-9, 6-11, 6-13, 6-16, 6-17, 6-18, 6-19, 6-20, 8-24
luminaires
portable, 6-2
surface mounted, 6-20
track lighting, 6-9

M

manual, 1-1, 1-2, 1-8, 1-10, 1-23, 2-3, 2-4, 2-6, 2-9, 2-10, 2-11, 2-15, 3-12, 3-33, 3-41, 3-44, 3-45, 3-46, 3-63, 3-66, 3-69, 3-72, 4-3, 4-36, 4-47, 6-11, 6-12, 6-13, 6-15, 6-20, 6-21, 6-22, 7-8, 7-13, 8-24
mechanical heating, 1-12, 8-2
metal framing, 3-35, 3-48, 5-7
Mixed Occupancy Buildings, 7-7
motors, 1-8, 1-18, 1-19, 4-6, 4-15, 4-16, 5-5, 5-8, 5-13, 7-3, 7-5, 8-17, 8-20, 8-21, 8-22
Multifamily Buildings, 6-2
Multi-Family Buildings, 2-19

N

National Appliance Energy Conservation Act, 4-3, 4-4, 4-6, 4-8, 5-17, 7-6
National Fenestration Rating Council, 3-3, 3-4, 3-5, 3-6, 3-7, 3-8, 3-9, 3-10, 3-11, 3-12, 3-13, 3-19, 3-23, 3-25, 3-71, 3-72, 8-8, 8-9, 8-10
Non-Central Space Cooling Equipment, 4-10
North-facing. *See* building orientation

O

occupant sensor, 6-1, 6-2, 6-11, 6-12, 6-13, 6-15, 6-16, 6-20, 6-21, 6-22, 8-24
orientation, 1-17, 1-18, 2-2, 2-3, 3-4, 3-18, 3-20, 3-23, 7-1, 7-9, 7-10, 7-11, 8-6, 8-9
building. *See* building orientation
Orientation, 7-11
outdoor air, 3-24, 3-66, 5-1
overhang, 3-15, 3-20

P

Performance Approach, 1-18
permanently installed, 4-44, 5-24, 6-1, 6-2, 6-3, 6-6, 6-8, 6-10, 6-13
pilot light, 3-60, 3-61, 3-62, 4-7, 4-48, 5-9, 5-10, 5-12, 8-13
pipe
insulation, 4-37, 4-42, 5-2, 5-6, 5-7, 5-8, 5-12, 5-13, 5-15, 5-16, 5-22, 8-23
Plan Check, 1-27, 2-3, 3-25
plenum, 2-19, 4-13, 4-17, 4-18, 4-25, 4-26, 4-29, 4-33, 4-52, 8-20
point of use heaters, 5-12, 5-13, 5-16, 5-18
process load, 5-7
proposed building design, 1-18, 1-20, 2-1, 2-2, 7-7
pumps, 1-19, 2-8, 2-17, 4-1, 4-3, 4-4, 4-6, 4-11, 4-13, 4-34, 4-41, 4-44, 4-45, 4-50, 5-2, 5-3, 5-11, 5-13, 5-19, 5-20, 5-21, 8-15, 8-16

R

radiant heating system, 4-6
readily accessible, 3-60, 4-13, 4-23, 6-10
recirculating system, 5-6, 5-13, 5-14, 5-18
recovery efficiency, 5-4
reflectance, 3-49, 3-50, 3-51
refrigerant, 1-19, 2-5, 2-8, 2-18, 2-19, 4-1, 4-2, 4-11, 4-13, 4-14, 4-16, 4-19, 4-37, 4-45, 4-50, 4-51, 4-52, 4-53, 4-54, 7-5, 8-13, 8-15, 8-16, 8-17, 8-25, 8-26, 8-27, 8-31
Refrigerant Charge, 4-13, 4-14, 4-15, 4-16, 4-50, 4-51, 4-52, 4-53, 4-54, 8-15, 8-17
repair, 4-13, 8-2, 8-11, 8-20
reset, 4-41
residential, 1-1, 1-2, 1-3, 1-6, 1-7, 1-8, 1-10, 1-13, 1-14, 1-15, 1-16, 1-17, 1-26, 2-1, 3-4, 3-5, 3-25, 3-40, 3-45, 3-49, 3-50, 3-58, 3-70, 4-7, 4-27, 4-37, 4-39, 4-46, 4-50, 5-8, 6-1, 6-2, 6-3, 6-4, 6-6, 6-14, 6-20, 6-21, 7-7, 7-8, 8-4, 8-21, 8-23
roof, 1-2, 2-5, 2-9, 3-1, 3-3, 3-11, 3-13, 3-26, 3-27, 3-28, 3-29, 3-30, 3-31, 3-32, 3-34, 3-46, 3-47, 3-48, 3-49, 3-50, 3-51, 3-52, 3-66, 5-7, 7-2, 7-4, 7-6, 7-10, 7-13, 8-6, 8-7, 8-11, 8-27, 8-32
R-value, 1-2, 2-5, 3-3, 3-19, 3-26, 3-28, 3-30, 3-36, 3-37, 3-38, 3-40, 3-43, 3-45, 3-47, 3-

48, 3-51, 3-52, 3-69, 3-71, 3-72, 4-17, 4-22, 4-25, 4-26, 4-27, 4-41, 4-42, 4-49, 5-3, 5-22, 7-2, 7-4, 7-5, 7-6

S

seasonal energy efficiency ratio, 4-2
Seasonal Energy Efficiency Ratio. *See* SEER
SEER, 4-15, 4-45, 7-12
service water heating, 1-7, 1-19, 1-24, 2-4, 2-10, 4-36, 4-39, 4-40, 5-1, 5-2, 5-3, 5-4, 5-5, 5-6, 5-7, 5-8, 5-10, 5-11, 5-12, 5-13, 5-14, 5-15, 5-17, 5-18, 5-19, 5-20, 5-21, 5-23, 5-24, 5-25, 7-5, 7-6, 8-1, 8-2, 8-5, 8-21, 8-22, 8-23

compliance forms, 2-12, 3-24, 3-46, 3-67, 5-17

distribution losses, 5-19

insulation, 1-2, 1-6, 1-7, 1-8, 1-18, 2-2, 2-4, 2-5, 2-8, 2-9, 2-13, 2-18, 2-19, 2-20, 3-1, 3-2, 3-3, 3-11, 3-23, 3-26, 3-27, 3-28, 3-29, 3-30, 3-31, 3-32, 3-33, 3-34, 3-35, 3-36, 3-37, 3-38, 3-40, 3-41, 3-42, 3-43, 3-44, 3-45, 3-46, 3-47, 3-48, 3-51, 3-52, 3-53, 3-54, 3-59, 3-66, 3-67, 3-68, 3-69, 3-71, 4-2, 4-8, 4-11, 4-12, 4-17, 4-22, 4-23, 4-26, 4-27, 4-33, 4-37, 4-40, 4-41, 4-42, 4-43, 5-2, 5-3, 5-6, 5-7, 5-8, 5-10, 5-11, 5-14, 5-15, 5-16, 5-18, 5-20, 5-21, 5-22, 5-23, 6-2, 6-16, 7-1, 7-2, 7-3, 7-4, 7-6, 7-12, 8-4, 8-6, 8-7, 8-13, 8-14, 8-17, 8-19, 8-20, 8-21, 8-22, 8-27, 8-28, 8-32, 8-33

non-circulating systems, 5-22

reference, 1-1, 1-8

solar, 3-50, 5-9

standby losses, 5-4, 5-5

temperature controls, 5-3, 5-23
shading devices, 3-21, 3-22, 3-25, 7-1, 7-4
single-family house, 8-30
skylight well, 3-46
slab-on-grade floor, 3-56, 3-57, 4-41, 7-4
SMACNA, 4-7
soffit, 3-32
solar energy, 3-50, 5-9
solar gain, 1-5, 3-15, 3-16, 3-20, 3-22, 3-23, 3-55, 3-70, 3-71
Solar heat gain coefficient, 3-72
solar heat gain coefficient (SHGC), 3-4, 3-9, 3-10, 7-3
South-facing. *See* building orientation
spa heater, 4-48, 5-9
space

indirectly conditioned, 1-13, 4-36, 8-3

unconditioned, 1-13, 3-44, 3-58, 4-16, 4-36, 6-2, 6-17, 6-18, 7-7, 8-3, 8-13, 8-14
Standard 90.1

scope, 1-1
story, 1-8, 1-15, 1-17, 2-12, 3-23, 3-36, 7-7, 7-9, 7-10

habitable, 1-8
straw bales, 3-51

explanation, 3-52
suction lines, 4-11, 4-12, 4-52, 4-53
supply fan, 3-58
swimming pool, 4-48, 5-9

T

task lighting, 6-1, 6-11
Temperature Sensor, 4-52
thermal efficiency, 5-5
thermal mass, 1-18, 3-51, 3-52, 3-55, 3-56, 3-57, 3-68, 7-6
thermostat, 4-6, 4-33, 4-34, 4-35, 4-44, 5-19, 5-20, 5-24, 7-12, 8-13, 8-17, 8-20

setback, 4-1, 4-6, 4-33, 4-34, 4-35, 7-12, 8-17, 8-20

setpoint, 4-34
Thermostatic Expansion Valve, 2-5, 4-13, 4-51
time clock, 6-14
tinted glass, 3-9
Title 24, 1-1, 1-11, 1-25
transformer, 6-9, 6-22

U

U-factor, 2-8, 3-3, 3-4, 3-5, 3-6, 3-7, 3-8, 3-9, 3-10, 3-11, 3-12, 3-13, 3-14, 3-19, 3-23, 3-24, 3-25, 3-27, 3-28, 3-29, 3-34, 3-35, 3-36, 3-38, 3-41, 3-42, 3-43, 3-46, 3-48, 3-51, 3-52, 3-68, 3-69, 3-70, 3-71, 3-72, 4-14, 4-15, 4-24, 4-42, 7-1, 7-3, 7-4, 8-4, 8-5, 8-7, 8-8, 8-9, 8-10, 8-11, 8-12, 8-32, 8-33

V

Vapor Barrier, 3-27, 3-54, 3-55, 3-66, 3-67, 8-6
vapor retarder, 3-32, 3-54
vent damper, 3-54, 4-7
ventilation, 1-14, 3-23, 3-24, 3-32, 3-41, 3-48, 3-54, 3-58, 3-62, 3-65, 3-66, 3-68, 3-69, 7-6

Appendix A Compliance Forms

Compliance Form	*Length*
CF-1R – Certificate of Compliance: Residential	*5 Pages*
CF-SR – Solar Water Heating Calculation Form	*2 Pages*
MF-1R – Mandatory Measures Summary: Residential	*2 Pages*
WS-1R – Thermal Mass Worksheet	*1 Page*
WS-2R – Area Weighted Average Calculation Worksheet	*1 Page*
WS-3R – Solar Heat Gain Coefficient (SHGC) Worksheet	*2 Page*
WS-4R – Fenestration – Maximum Allowed Worksheet	*1 Page*
WS-5R – Residential Kitchen Lighting Worksheet	*1 Page*
CF-4R – Certificate of Field Verification and Diagnostic Testing	*8 Pages*
CF-6R – Installation Certificate	*12 Pages*

Overview

This appendix includes blank copies of the Residential Compliance Forms. Compliance documentation is completed at the building permit phase, the construction phase, and the testing and verification phase. The forms and documents submitted at each of these phases are described below.

Building Permit Phase Documentation

When the performance approach is used, the CF-1R and MF-1R forms are produced by the compliance software. Thermal Mass and Solar Heat Gain Coefficient calculations are performed internally by the software.

Certificate of Compliance-Residential (CF-1R)

The CF-1R summarizes the minimum energy performance specifications needed for compliance, including the results of the heating and cooling load calculations. The Standards require that a certificate of compliance be included on the plans (CEC approved performance ACM software automatically generates CF-1R forms, which vary is some respects from the prescriptive CF-1R forms).

Solar Water Heating Calculation Form (CF-SR)

SF-5 Form This form is used to calculate the percent of domestic water heating that is supplied by solar water heating. The form is used to either calculate the percent of solar contributed by tested solar system. All system or collector data must be based on the OG-300 test methods of the Solar Rating and Certification Corporation.

Mandatory Measures Checklist (MF-1R)

This document is applicable for both prescriptive and performance compliance.

Thermal Mass Worksheet (WS-1R)

This worksheet is completed by the documentation author when complying with the prescriptive requirements of Package C.

Area Weighted Average Calculation Worksheet (WS-2R)

This worksheet is used to calculate weight-averaged U-factors for prescriptive envelope compliance.

Solar Heat Gain Coefficient (SGHC) Worksheet (WS-3R)

This worksheet is completed by the documentation author when complying with the prescriptive requirements.

Fenestration – Maximum Allowed Worksheet (WS-4R)

This worksheet is completed by the documentation author when complying with maximum allowance fenestration when complying with the prescriptive requirements. See Table 151-B and 151-C.

Residential Kitchen Lighting Worksheet (WS-5R)

This worksheet is completed to determine if kitchen lighting complies with the Standards requirements.

Field Verification and/or Diagnostic Testing Documentation

Certificate of Field Verification and Diagnostic Testing (CF-4R)

This document is completed by the HERS rater when field verification and/or diagnostic testing is required. These documents include information about the measurements and tests that were performed. The HERS rater verifies that the requirements for compliance credit have been met. Copies of the CF-4R should be provided to the Builder, HERS Provider and Building Department with a wet signature for every home taking the HERS credit.

Construction Phase Documentation

Installation certificate (CF-6R)

The CF-6R is a set of documents completed by different contractors responsible for installing the water heating equipment, the windows (fenestration), the air distribution ducts and HVAC equipment, the measures that affect building envelope tightness, the lighting system, and the insulation. This includes the Insulation Certificate (Formerly the IC-1), which is completed by the insulation contractor.

CERTIFICATE OF COMPLIANCE: RESIDENTIAL (Page 1 of 5) CF-1R

Project Title	Date	Building Permit #
Project Address		
		Plan Check / Date
Documentation Author	Telephone	Field Check / Date
Compliance Method (Prescriptive)	Climate Zone	Enforcement Agency Use Only

Alternative Component Package Method: (check one) _____C _____D _____D (Alternative)

- Package C and Package D choices require HERS rater field verification and/or diagnostic testing (see CF-1R page 3)
- For Package D Alternative see Appendix B Table 151-C Footnotes 8-14 in the Residential Compliance Manual (RCM)

GENERAL INFORMATION

Total Conditioned Floor Area (CFA) _____ft^2

Average Ceiling Height: _____ ft

Check Applicable Boxes

Building Type: (check one or more) _____ Single Family_____ Multifamily_____ Addition _____ Alteration
(If adding fenestration fill-out WS-4R, Fenestration Maximum Allowed Area Worksheet and see Section 8.3.2 for Additions and 8.3.3 for Alterations in the RCM.)

- Maximum Allowed Total Fenestration Area _____ ft^2 (from WS-4R)
- Maximum Allowed West Facing Fenestration Area _____ ft^2 (from WS-4R)
- Number of Stories: _____ Number of Dwelling Units: _____
- Floor Construction Type: _____ Slab/Raised Floor (circle one or both)
- Front Orientation: _____ North / South / East / West : All Orientations (input front orientation in degrees from True North and circle one).

☐ **RADIANT BARRIER** (check box if required in climate zones 2, 4, 8-15)

OPAQUE SURFACES INCLUDING OPAQUE DOORS

Component Type (Wall, Roof, Floor, Slab Edge, Doors)	Frame Type (Wood or Metal)	Cavity Insulation R-Value	Continuous Insulation R-Value	Assembly U-factor (for wood, metal frame and mass assemblies) [1]	Joint Appendix IV Reference	Roof Radiant Barrier Installed[2] Yes or No	Location Comments (attic, garage, typical, etc.)

1) See Joint Appendix IV in Section IV.2, IV.3, and IV.4, which is the basis for the U-factor criterion. U-factors can not exceed prescriptive value to show equivalence to R-values.
2) This column is for the Inspector to verify installation of roof radiant barrier.

Project Title	*Date*

FENESTRATION PRODUCTS – U-FACTOR AND SHGC

✓ ☐ FENESTRATION MAXIMUM ALLOWED AREA WORKSHEET WS-4R – must be included for New Construction, Additions, and Alterations.

Fenestration #/Type/Pos. (Front, Left, Rear, Right, Skylight)	Orien-tation, N, S, E, W[1]	Area (ft^2)	U-factor[2]	U-factor Source[3]	SHGC[4]	SHGC Source[5]	Exterior Shading/Overhangs[6, 7] ✓ box if WS-3R is included
							☐
							☐
							☐
							☐
							☐
							☐
							☐

1) Skylights are now included in West-facing fenestration area if the skylights are tilted to the west or tilted in any direction when the pitch is less than 1:12. See §151(f)3C and in Section 3.2.3 of the Residential Manual.
2) Enter values in this column from either NFRC Certified Label or from Standards Default Table 116-A.
3) Indicate source either from NFRC or Table 116-A,
4) Enter values in this column from NFRC or from Standards Default Table 116B or adjusted SHGC from WS-3R.
5) Indicate source either from NFRC, Table 116B or WS-3R
6) Shading Devices are defined in Table 3-3 in the Residential Manual and see WS-3R to calculate Exterior Shading devices.
7) See Section 3.2.4 in the Residential Manual.

HVAC SYSTEMS

Heating Equipment Type and Capacity (furnace, heat pump, boiler, etc.)	Minimum Efficiency (AFUE or HSPF)	Distribution Type and Location (ducts, attic, etc.)	Duct or Piping R-Value	Thermostat Type	Configuration (split or package)

Cooling Equipment Type and Capacity (A/C, heat pump, evap. cooling)	Minimum Efficiency (SEER or EER)	Distribution Type and Location (ducts, attic, etc.)	Duct or Piping R-Value	Thermostat Type	Configuration (split or package)

Project Title	*Date*

SEALED DUCTS and TXVs (or Alternative Measures)

A signed CF-4R Form must be provided to the building department for each home for which the following are required.

✓	
☐	Sealed Ducts (all climate zones) (Installer testing and certification and HERS rater field verification required.)
☐	TXVs, readily accessible (climate zones 2 and 8-15 only) (Installer testing and certification and HERS Rater field verification required.)
☐	Refrigerant Charge (climate zones 2 and 8-15 only) (Installer testing and certification and HERS Rater field verification required.)

OR

☐	Alternative to Sealed Ducts and Refrigerant Charge /TXVs (See Package D Alternative Package Features for Project Climate Zone in the RM Appendix B Table 151-C, Footnotes 7-14.

OR

☐	No ducts installed.
☐	New ducts from existing space conditioning equipment, not exceeding 40ft. in length.
☐	For additions and alterations, duct systems that are not documented to have been previously sealed as confirmed through field verification and diagnostic testing in accordance with procedures in the Residential ACM Manual. Duct systems with more than 40 linear feet in unconditioned spaces shall meet the requirements of Section 150(m) and duct insulation requirements of Package D.

WATER HEATING SYSTEMS

✓	
☐	Check box if system meets criteria of a "Standard" system. Standard system is one gas-fired water heater per dwelling unit. If the water heater is a storage type, 50 gallons is the maximum capacity and recirculation system is not allowed.
☐	Check box when using Preapproved Alternative Water Heating table, Table 5-4 in Chapter 5 in the Residential Manual. No water heating calculations are required, and the system complies automatically.
☐	Check box if system does not meet criteria of "Standard" system, and does not comply with the Preapproved Alternative Water Heating table. In this case, the Performance Method must be used and must be included in the submittal.
☐	Check box to verify that a time control is required for a recirculating system pump for a system serving multiple u

Systems serving single dwelling units (See RM Table 5-4, Alternative Water Heating Systems for recirculation requirements)

Water Heater Type/Fuel Type	Distribution Type	Number in System	Rated Input[1] (kW or Btu/hr)	Tank Capacity (gallons)	Energy Factor[1] or Thermal Efficiency	Standby[1] Loss (%)	Tank External Insulation R-Value

System serving multiple dwelling units (See Residential Manual Section 5.3.3)

Water Heater Type	Distribution Type	Number in System	Rated Input[1] (kW or Btu/hr)	Tank Capacity (gallons)	Energy Factor[1] or Thermal Efficiency	Standby[1] Loss (%)	Tank External Insulation R-Value

1) For small gas storage water heaters (rated inputs of less than or equal to 75,000 Btu/hr), electric resistance, and heat pump water heaters, list Energy Factor. For large gas storage water heaters (rated input of greater than 75,000 Btu/hr), list Rated Input, Recovery Efficiency, Thermal Efficiency and Standby Loss. For instantaneous gas water heaters, list Rated Input and Thermal Efficiencies.

Pipe Insulation (kitchen lines ≥ 3/4 inches) All hot water pipes from the heating source to the kitchen fixtures that are ¾ inches or greater in diameter shall be thermally insulated as specified by Section 150 (j) 2 A or 150 (j) 2 B.

Project Title	*Date*

SPECIAL FEATURES REQUIRING BUILDING OFFICAL or HERS RATER VERIFICATION

Indicate which special features are parts of this project. The list below only represents special features relevant to the prescriptive method. (Check Applicable boxes)

Category	Building Official Verification of Special Features	HERS Rater Verification	HERS Rater Diagnostic Testing	Measure
Ducts				
☐	Y			100% of ducts in crawlspace/basement
☐		Y		Buried ducts
☐		Y		Diagnostic supply duct location, surface area, and R-value
☐	Y			Duct increased R-value
☐			Y	Duct leakage
☐	Y			Ducts in attic with radiant barriers
☐		Y		Less than 12 ft. of duct outside conditioned space
☐		Y		Non-standard duct location
☐	Y			Supply registers within two ft of floor
☐				
Envelope				
☐	Y			Air retarding wrap
☐	Y			Cool roof
☐	Y			Exterior shades
☐	Y			High thermal mass
☐	Y			Inter-zone ventilation
☐	Y			Metal framed walls
☐	Y			Non-default vent heights
☐		Y		Quality insulation installation
☐	Y			Radiant barrier
☐			Y	Reduced infiltration (blower door). May also require mechanical ventilation.
☐	Y			Solar gain targeting (for sunspaces)
☐	Y			Sunspace with interzone surfaces
☐	Y			Vent area greater than 10%
☐				
HVAC Equipment				
☐			Y	Adequate air flow
☐		Y		Air conditioner size
☐			Y	Air handler fan power
☐		Y		High EER
☐	Y			Hydronic heating systems
☐		Y		Mechanical ventilation
☐			Y	Refrigerant charge
☐		Y		Thermostatic expansion valve (TXV)
☐	Y			Zonal control
Water Heater				
☐	Y			Combined hydronic
☐	Y			High EF for existing water heaters
☐	Y			Non-NAECA water heater
☐	Y			Non-standard water heaters (wh/unit)
☐	Y			Water heater distribution credits

Project Title	Date

Special Remarks

COMPLIANCE STATEMENT

This certificate of compliance lists the building features and specifications needed to comply with Title 24, Parts 1 and 6 of the California Code of Regulations, and the administrative regulations to implement them. This certificate has been signed by the individual with overall design responsibility. The undersigned recognizes that compliance using duct design, duct sealing, verification of refrigerant charge and TXVs, insulation installation quality, and building envelope sealing require installer testing and certification and field verification by an approved HERS rater.

Designer or Owner (per Business and Professions Code)	**Documentation Author**
Name:	Name:
Title/Firm:	Title/Firm:
Address:	Address:
Telephone:	Telephone:
License #:	License #: (if applicable)
(signature) (date)	(signature) (date)

Enforcement Agency

Name: _____	Comments: _____
Title _____	_____
Agency: _____	_____
Telephone: _____	_____
_____	_____
(signature / stamp) (date)	_____

SOLAR WATER HEATING CALCULATION FORM CF-SR

Project Title	Date

CF-SR- Solar Water Heating Calculation Form	OG-300
Property Name: _____	Building Type: (Single Family, Multi-family): _____
Total Conditioned Floor Area (CFA)ft^2: _____	Climate zone (1-16): _____

INPUTS FOR SYSTEMS SRCC OG-300:	
1. Solar Energy Factor of OG-300 solar water heating system as listed in SRCC directory	
2. Energy Factor of Water Heater (enter .6 for gas .9 for electric)	
3. Constant - 41045 (amount of energy used in SRCC test)	41045.0
4. Constant - 3500 average parasitic loss value in SRCC test	3500.0
5. Gallons per day use value calculated as: (21.5 x .0014 x CFA) from top of page	
6. Constant – 64.3 gallons used in SRCC test method	64.3
7. Hot water supply temperature 135 degrees	135.0
8. Enter inlet water temperature (inlet water temperature values are listed on Table 1 by Climate Zone)	
9. Difference in supply and inlet water temperature (subtract line 7 from line 8)	1500.0
10. Constant - 1500 Solar radiation value used in SRCC test	
11. Solar radiation level from Table 1 below	
CALCULATION FOR SYSTEM	
12. Multiply line 2 by line 3	
13. Divide line 12 by line 1	
14. Divide line 5 by line 6	
15. Divide the result in line 9 by 77	
16. Subtract 1 by line 2	
17. Multiply lines 13 by line 14 by line 15	
18. Multiply lines 4 by line 16	
19. Add line 17 to line 18	
20. Divide line 19 by line 3	
21. Divide line 10 by line 11	
22. Multiply line 20 by line 21	
23. Subtract 1 from line 22	
Solar Fraction (from line 23)	

Table 1

Climate Zone	Water Temperature	Solar Radiation		Climate Zone	Water Temperature	Solar Radiation
1	53.90	1220		9	63.76	1685
2	57.52	1220		10	63.76	1612
3	57.69	1533		11	61.00	1580
4	59.12	1601		12	59.65	1670
5	57.93	1602		13	63.99	1726
6	61.55	1599		14	61.48	1827
7	62.63	1586		15	73.55	1884
8	62.97	1682		16	50.54	1513

Note: For all solar water heating systems rated using the SRCC OG 300 test method a copy of the SRCC test result must be attached along with this form and with the rest of the documentation. To use this approach the water heater used in compliance has the same fuel type and energy factor that was used in the SRCC test.

SOLAR WATER HEATING CALCULATION FORM CF-SR

EXAMPLE

CF-SR- Solar Water Heating Calculation Form **OG-300**

Property Name: _____ Building Type: (Single Family, Multi-family): Single Family

Total Conditioned Floor Area (CFA)ft^2 : 2500 Climate zone (1-16): 2

INPUTS FOR SYSTEMS SRCC OG-300:

1.	Enter Solar Energy Factor of OG-300 solar water heating system as listed in SRCC directory	3.40
2.	Energy Factor of Water Heater (enter .6 for gas .9 for electric)	0.90
3.	Constant - 41045 (amount of energy used in SRCC test)	41045.00
4.	Constant - 3500 average parasitic loss value in SRCC test	3500.00
5.	Gallons per day use value calculated as: (21.5 x .0014 x CFA) from top of page	75.25
6.	Constant – 64.3 gallons used in SRCC test method	64.30
7.	Constant Hot water supply temperature 135 degrees	135.00
8.	Enter inlet water temperature (inlet water temperature values are listed on Table 1 by Climate Zone)	57.52
9.	Difference in supply and inlet water temperature (subtract line 7 from line 8)	77.48
10.	Constant - 1500 Solar radiation value used in SRCC test	1500.00
11.	Solar radiation level from Table 1 below	1219.58

CALCULATION FOR SYSTEM

12.	Multiply line 2 by line 3	36940.50
13.	Divide line 12 by line 1	10864.85
14.	Divide line 5 by line 6	1.17
15.	Divide the result in line 9 by 77	1.01
16.	Subtract 1 by line 2	0.10
17.	Multiply lines 13 by line 14 by line 15	12794.90
18.	Multiply lines 4 by line 16	350.00
19.	Add line 17 to line 18	13144.90
20.	Divide line 19 by line 3	0.32
21.	Divide line 10 by line 11	1.23
22.	Multiply line 20 by line 21	.39
23.	Subtract 1 from line 22	0.61
	Solar Fraction	**0.61**

Table 1

Climate Zone	Water Temperature	Solar Radiation		Climate Zone	Water Temperature	Solar Radiation
1	53.90	1220		9	63.76	1685
2	57.52	1220		10	63.76	1612
3	57.69	1533		11	61.00	1580
4	59.12	1601		12	59.65	1670
5	57.93	1602		13	63.99	1726
6	61.55	1599		14	61.48	1827
7	62.63	1586		15	73.55	1884
8	62.97	1682		16	50.54	1513

MANDATORY MEASURES SUMMARY: RESIDENTIAL (Page 1 of 2) MF-1R

Project Title	Date

Note: Low-rise residential buildings subject to the Standards must contain these measures regardless of the compliance approach used. More stringent compliance requirements from the Certificate of Compliance supersede the items marked with an asterisk (*) below. When this checklist is incorporated into the permit documents, the features noted shall be considered by all parties as minimum component performance specifications for the mandatory measures whether they are shown elsewhere in the documents or on this checklist only.

Instructions: Check or initial applicable boxes or check NA if not applicable and included with the permit application documentation.

DESCRIPTION	NA	Designer	Enforce -ment
Building Envelope Measures:	✓	✓	✓
* §150(a): Minimum R-19 in wood frame ceiling insulation or equivalent U-factor in metal frame ceiling.	☐	☐	☐
§150(b): Loose fill insulation manufacturer's labeled R-Value: _____.	☐	☐	☐
* §150(c): Minimum R-13 wall insulation in wood framed walls or equivalent U-factor in metal frame walls (does not apply to exterior mass walls).	☐	☐	☐
* §150(d): Minimum R-13 raised floor insulation in framed floors or equivalent U-factor.	☐	☐	☐
§150(e): Installation of Fireplaces, Decorative Gas Appliances and Gas Logs.			
1. Masonry and factory-built fireplaces have:			
a. closeable metal or glass door covering the entire opening of the firebox	☐	☐	☐
b. outside air intake with damper and control, flue damper and control	☐	☐	☐
2. No continuous burning gas pilot lights allowed.	☐	☐	☐
§150(f): Air retarding wrap installed to comply with §151 meets requirements specified in the ACM Residential Manual.	☐	☐	☐
§150(g): Vapor barriers mandatory in Climate Zones 14 and 16 only.	☐	☐	☐
§150(l): Slab edge insulation - water absorption rate for the insulation material alone without facings no greater than 0.3%, water vapor permeance rate no greater than 2.0 perm/inch.	☐	☐	☐
§118: Insulation specified or installed meets insulation installation quality standards. Indicate type and include CF-6R Form: _____	☐	☐	☐
§116-§117: Fenestration Products, Exterior Doors, and Infiltration/Exfiltration Controls.			
1. Doors and windows between conditioned and unconditioned spaces designed to limit air leakage.	☐	☐	☐
2. Fenestration products (except field-fabricated) have label with certified U-factor, certified Solar Heat Gain Coefficient (SHGC), and infiltration certification.	☐	☐	☐
3. Exterior doors and windows weather-stripped; all joints and penetrations caulked and sealed.	☐	☐	☐
Space Conditioning, Water Heating and Plumbing System Measures:			
§110-§113: HVAC equipment, water heaters, showerheads and faucets certified by the Energy Commission.	☐	☐	☐
§150(h): Heating and/or cooling loads calculated in accordance with ASHRAE, SMACNA or ACCA.	☐	☐	☐
§150(i): Setback thermostat on all applicable heating and/or cooling systems.	☐	☐	☐
§150(j): Water system pipe and tank insulation and cooling systems line insulation.			
1. Storage gas water heaters rated with an Energy Factor less than 0.58 must be externally wrapped with insulation having an installed thermal resistance of R-12 or greater.	☐	☐	☐
2. Back-up tanks for solar system, unfired storage tanks, or other indirect hot water tanks have R-12 external insulation or R-16 internal insulation and indicated on the exterior of the tank showing the R-value.	☐	☐	☐
3. The following piping is insulated according to Table 150-A/B or Equation 150-A Insulation Thickness:			
1. First 5 feet of hot and cold water pipes closest to water heater tank, non-recirculating systems, and entire length of recirculating sections of hot water pipes shall be insulated to Table 150B.	☐	☐	☐
2. Cooling system piping (suction, chilled water, or brine lines), piping insulated between heating source and indirect hot water tank shall be insulated to Table 150-B and Equation 150-A.	☐	☐	☐
4. Steam hydronic heating systems or hot water systems >15 psi, meet requirements of Table 123-A.	☐	☐	☐

MANDATORY MEASURES SUMMARY: RESIDENTIAL (Page 2 of 2) MF-1R

DESCRIPTION	NA	Designer	Enforce-ment
Space Conditioning, Water Heating and Plumbing System Measures: (continued)	✓	✓	✓
5. Insulation must be protected from damage, including that due to sunlight, moisture, equipment maintenance, and wind.	☐	☐	☐
6. Insulation for chilled water piping and refrigerant suction piping includes a vapor retardant or is enclosed entirely in conditioned space.	☐	☐	☐
7. Solar water-heating systems/collectors are certified by the Solar Rating and Certification Corporation.	☐	☐	☐
* §150(m): Ducts and Fans			
1. All ducts and plenums installed, sealed and insulated to meet the requirement of the CMC Sections 601, 602, 603, 604, 605 and Standard 6-5; supply-air and return-air ducts and plenums are insulated to a minimum installed level of R-4.2 or enclosed entirely in conditioned space. Openings shall be sealed with mastic, tape or other duct-closure system that meets the applicable requirements of UL 181, UL 181A, or UL 181B or aerosol sealant that meets the requirements of UL 723. If mastic or tape is used to seal openings greater than 1/4 inch, the combination of mastic and either mesh or tape shall be used.	☐	☐	☐
2. Building cavities, support platforms for air handlers, and plenums defined or constructed with materials other than sealed sheet metal, duct board or flexible duct shall not be used for conveying conditioned air. Building cavities and support platforms may contain ducts. Ducts installed in cavities and support platforms shall not be compressed to cause reductions in the cross-sectional area of the ducts.	☐	☐	☐
3. Joints and seams of duct systems and their components shall not be sealed with cloth back rubber adhesive duct tapes unless such tape is used in combination with mastic and draw bands.	☐	☐	☐
4. Exhaust fan systems have back draft or automatic dampers.	☐	☐	☐
5. Gravity ventilating systems serving conditioned space have either automatic or readily accessible, manually operated dampers.	☐	☐	☐
6. Protection of Insulation. Insulation shall be protected from damage, including that due to sunlight, moisture, equipment maintenance, and wind. Cellular foam insulation shall be protected as above or painted with a coating that is water retardant and provides shielding from solar radiation that can cause degradation of the material.	☐	☐	☐
7. Flexible ducts cannot have porous inner cores.	☐	☐	☐
§114: Pool and Spa Heating Systems and Equipment.			
1. A thermal efficiency that complies with the Appliance Efficiency Regulations, on-off switch mounted outside of the heater, weatherproof operating instructions, no electric resistance heating and no pilot light.	☐	☐	☐
2. System is installed with:			
a. at least 36" of pipe between filter and heater for future solar heating	☐	☐	☐
b. cover for outdoor pools or outdoor spas	☐	☐	☐
3. Pool system has directional inlets and a circulation pump time switch.	☐	☐	☐
§115: Gas fired fan-type central furnaces, pool heaters, spa heaters or household cooking appliances have no continuously burning pilot light. (Exception: Non-electrical cooking appliances with pilot < 150 Btu/hr)	☐	☐	☐
§118(i): Cool Roof material meets specified criteria	☐	☐	☐
Residential Lighting Measures:			
§150(k)1: HIGH EFFICACY LUMINAIRES OTHER THAN OUTDOOR HID: contain only high efficacy lamps as outlined in Table 150-C, and do not contain a medium screw base socket (E24/E26). Ballast for lamps 13 watts or greater are electronic and have an output frequency no less than 20 kHz	☐	☐	☐
§150(k)1: HIGH EFFICACY LUMINAIRES - OUTDOOR HID: contain only high efficacy lamps as outlined in Table 150-C, luminaire has factory installed HID ballast	☐	☐	☐
§150(k)2: Permanently installed luminaires in kitchens shall be high efficacy luminaires. Up to 50 percent of the wattage, as determined in § 130 (c), of permanently installed luminaires in kitchens may be in luminaires that are not high efficacy luminaires, provided that these luminaires are controlled by switches separate from those controlling the high efficacy luminaires.	☐	☐	☐
§150(k)3: Permanently installed luminaires in bathrooms, garages, laundry rooms and utility rooms shall be high efficacy luminaires. OR are controlled by an occupant sensor(s) certified to comply with Section 119(d) that does not turn on automatically or have an always on option.	☐	☐	☐
§150(k)4: Permanently installed luminaires located other than in kitchens, bathrooms, garages, laundry rooms, and utility rooms shall be high efficacy luminaires (except closets less than 70ft^2): OR are controlled by a dimmer switch OR are controlled by an occupant sensor that complies with Section 119(d) that does not turn on automatically or have an always on option.	☐	☐	☐
§150(k)5: Luminaires that are recessed into insulated ceilings are approved for zero clearance insulation cover (IC) and are certified airtight to ASTM E283 and labeled as air tight (AT) to less than 2.0 CFM at 75 Pascals.	☐	☐	☐
§150(k)6: Luminaires providing outdoor lighting and permanently mounted to a residential building or to other buildings on the same lot shall be high efficacy luminaires (not including lighting around swimming pools/water features or other Article 680 locations) OR are controlled by occupant sensors with integral photo control certified to comply with Section 119(d).	☐	☐	☐
§150(k)7: Lighting for parking lots for 8 or more vehicles shall have lighting that complies with Sec. 130, 132, and 147. Lighting for parking garages for 8 or more vehicles shall have lighting that complies with Sec. 130, 131, and 146.	☐	☐	☐
§150(k)8: Permanently installed lighting in the enclosed, non-dwelling spaces of low-rise residential buildings with four or more dwelling units shall be high efficacy luminaires OR are controlled by occupant sensor(s) certified to comply with Section 119(d).	☐	☐	☐

THERMAL MASS WORKSHEET WS-1R

Project Title	Date

INTERIOR THERMAL MASS:

Thermal Mass required for Package C in Table 151-B shall meet or exceed the required interior mass capacity as specified below.

Choose one of the following:

Package C (Slab Floor) 2.36 x _____ = _____
Ground Floor Area-Slab Floor — Required Interior Mass Capacity

Package C (Raised Floor) 0.18 x _____ = _____
Ground Floor Area-Raised Floor — Required Interior Mass Capacity

Calculate the Interior Mass Capacity value using the worksheet space below. Look up the Unit Interior Mass Capacity for each interior mass surface in the Residential ACM, Appendix RB. For interior mass walls exposed on both (two) sides to conditioned space, enter the surface area of only one side

Description	Mass Area		Unit Interior Mass Capacity		Interior Mass Capacity
		x		=	
		x		=	
		x		=	
		x		=	
		x		=	
		x		=	
		x		=	
		x		=	

Total Interior Mass Capacity _____

The total interior mass capacity must be equal to or greater than the required interior mass capacity in order to meet the thermal mass requirements of Packages C.

_____ ≥ _____
Total Interior Mass Capacity — Required Interior Mass Capacity

AREA WEIGHTED AVERAGE CALCULATION WORKSHEET WS-2R

Project Title	Date

This worksheet should be used to calculate weight-averaged U-factors for prescriptive envelope compliance. R-values can never be area weighted; only area-weight U-factors.
Whenever two or more types of a building feature, material or construction assembly occur in a building, a weighted average of the different types must be calculated. Weighted averaging is simply a mathematical technique for combining different amounts of various components into a single number. Weighted averaging is frequently done when there is more than one level of floor, wall, or ceiling insulation in a building, or more than one type of window.

a. "Area" can be replaced throughout the formula by "Length" or any other unit of measure used for the value being averaged.
b. "Value" can be replaced throughout the formula by "U-factor," "Solar Heat Gain Coefficient," or any other value that varies throughout a residence and is appropriate to weight average.

Item No.	Type 1 Value[b]		Type 1 Area[a]		Type 2 Value[b]		Type 2 Area[a]		Type 3 Value[b]		Type 3 Area[a]		Total Area		Weighted Average Value
	[(_____)	x	(_____)	+	(_____)	x	(_____)	+	(_____)	x	(_____)]	÷		=	
	[(_____)	x	(_____)	+	(_____)	x	(_____)	+	(_____)	x	(_____)]	÷		=	
	[(_____)	x	(_____)	+	(_____)	x	(_____)	+	(_____)	x	(_____)]	÷		=	
	[(_____)	x	(_____)	+	(_____)	x	(_____)	+	(_____)	x	(_____)]	÷		=	
	[(_____)	x	(_____)	+	(_____)	x	(_____)	+	(_____)	x	(_____)]	÷		=	
	[(_____)	x	(_____)	+	(_____)	x	(_____)	+	(_____)	x	(_____)]	÷		=	
	[(_____)	x	(_____)	+	(_____)	x	(_____)	+	(_____)	x	(_____)]	÷		=	
	[(_____)	x	(_____)	+	(_____)	x	(_____)	+	(_____)	x	(_____)]	÷		=	

SOLAR HEAT GAIN COEFFICIENT WORKSHEET (Page 1 of 2) WS-3R

Project Title	Date

Items 1 through 4 must be completed for glazing/shading combinations by using the Default Table for Fenestration Products (Table 116-B of the Standard), NFRC certified data, or Solar Heat Gain Coefficients Used for Exterior Shading Attachments (Table S-1 below) for the specific conditions indicated (#1a or #1b or #3).

General Information

1a. For Fenestration Products w/NFRC testing and labels: $SHGC_{fen}$ = _____

OR

1b. For Fenestration Products without NFRC testing and labels (Table 116-B of the Standard): $SHGC_{fen}$ = _____

1c. Frame Type	1d. Product Type	1e. Glazing Type	1f. Single/Double Pane
_____	_____	_____	_____
metal, non-metal, metal w/thermal break	operable/fixed	(visibly) tinted clear (not visibly tinted)	single pane/double pane

2. Skylight (Y/N) _____
(A skylight is fenestration mounted on a roof surface at a slope less than 60º from the horizon.)

Combined Exterior Shade with Fenestration

Exterior Shade Type: _____

3. $SHGC_{Exterior\ Shade}$: _____
(If no exterior shade, assume standard bug screens, $SHGC_{Exterior\ Shade}$ = 0.76 for ordinary windows. This requirement does not apply to skylights where $SHGC_{Exterior\ Shade}$ is assumed to be 1.00. If another exterior shade is substituted for bug screens, use one of the values from Table S-1.

4. [(_____ × 0.2875) + 0.75] × _____ = [ ]
$SHGC_{max}$ $SHGC_{min}$ Total SHGC

Where:
$SHGC_{max}$ = Larger of (#1a or #1b) or #3
$SHGC_{min}$ = Smaller of (#1a or #1b) or #3

Note: Calculated Solar Heat Gain Coefficient values for Total SHGC may be used directly for prescriptive packages.

- Package C Target Value for Total SHGC is 0.38 for Climate Zones 2, 4, 7-15
- Package C Target Value for Total SHGC is 0.42 for Climate Zones 1, 3, 5, 6, 16
- Package D Target Value for Total SHGC is 0.40 for Climate Zones 2, 4, 7-15

Table S-1: Solar Heat Gain Coefficients Used for Exterior Shading Attachments for WS-3R and Computer Performance Methods [1,2]

Exterior Shading Device[3]	w/Single Pane Clear Glass & Metal Framing[4]
1) Standard Bug Screens	0.76
2) Exterior Sunscreens with Weave 53*16/inch	0.30
3) Louvered Sunscreens w/Louvers as Wide as Openings	0.27
4) Low Sun Angle (LSA) Louvered Sunscreens	0.13
5) Roll-down Awning	0.13
6) Roll Down Blinds or Slats	0.13
7) None (for skylights only)	1.00

1. These values may be used on line 3 of the Solar Heat Gain Coefficient (SHGC) Worksheet (WS-3R) to calculate exterior shading with other glazing types and combined interior and exterior shading with glazing.
2. Exterior operable awnings (canvas, plastic or metal), except those that roll vertically down and cover the entire window, should be treated as overhangs for purposes of compliance with the Standards.
3. Standard bug screens must be assumed for all fenestration unless replaced by other exterior shading attachments. The solar heat gain coefficient listed for bug screens is an area-weighted value that assumes that the screens are only on operable windows. The solar heat gain coefficient of any other exterior shade screens applied only to some window areas must be area-weighted with the solar heat gain coefficient of standard bug screens for all other glazing (see Form WS-2R). Different shading conditions may also be modeled explicitly in the computer performance method.
4. Reference glass for determining solar heat gain coefficients is 1/8 inch double strength (DSS) glass.

Instructions for WS-3R

The following explains how to calculate solar heat gain coefficients on WS-3R. The number of each item below corresponds to the appropriate item on WS-3R.

Enter either:

1a. For products with NFRC testing and labels, enter the product's labeled SHGC as #1a. $SHGC_{fen}$

OR

1b. Enter the default $SHGC_{fen}$ from Table 116-B of the Standards corresponding to the fenestration characteristics described in entries 1c, 1d, 1e, and 1f. Entries for 1c, 1d, 1e, and 1f are only needed if 1b is entered for $SHGC_{fen}$.

If 1b is entered, then:

- 1c Describe the Frame Type [metal, metal w/thermal break, or non-metal (non-metal includes both vinyl and wood)].
- 1d The Product Type (operable or fixed);
- 1e The glazing type (tinted or uncoated). Note that tints or coatings that cannot be easily observed by the building official must be classified as "uncoated;" that is, tints must be easily visible to the naked eye.
- 1f Single or double pane glazing.

2 For skylights mounted on a roof surface, enter "Y," otherwise enter "N." A skylight is fenestration mounted at a slope less than 60º from the horizon.

In a performance compliance, select s*tandard* or *draperies.* This is the only available choice and some compliance tools will eliminate this choice altogether.

3 Describe the exterior shading device in the space provided (e.g., roll down awning). List $SHGC_{Exterior\ Shade}$, the SHGC of the exterior shade with 1/8" clear single pane glass and metal framing, from Table S-1. If a single window or skylight has multiple exterior shades (i.e., shade screens and awnings) use the one shading device with the lower SHGC.

If no exterior shade is proposed, assume standard bug screens with a SHGC or 0.76 (or a SHGC or 1.00 for horizontal glazing). This applies to the full area of fixed fenestration products as well as operable.

4 Calculate $SHGC_{Shade\ Open}$ using values from Items 3 and either 1a or 1b. The result is the combined SHGC of the fenestration product and exterior device with the interior *shade open.*

FENESTRATION – MAXIMUM ALLOWED AREA WORKSHEET WS-4R

Project Title	Date

FENESTRATION PRODUCTS – NEW CONSTRUCTION- NEW BUILDINGS

Use this table for new building construction to account for total building % of fenestration.

A	B	C	D	E	F	G
#/Type/Pos. (Front, Left, Rear, Right, Skylight)	Orientation	Total Fenestration, West Facing Area (ft^2)	Total Fenestration for N, S, E Orientations Area (ft^2)	CFA (ft^2)	Total Percent of West Facing Fenestration[1] (C/E) x 100%	Total % of Fenestration[2] Including West (D/E) x 100% + F
	North					
	South					
	East					
	West					
	Totals					

1) If west facing area exceeds 5% of CFA in climate zones 2, 4, and 7-15, the performance approach must be used.
2) If total percent of fenestration exceeds 20% including West facing orientations then performance approach must be used. West facing area includes skylights tilted to the west or tilted in any direction when the pitch is less than 1:12 for Package D only.

FENESTRATION PRODUCTS – NEW CONSTRUCTION- ADDITIONS

✓ ☐Less than 100 ft^2, ☐ Less than or Equal to 1000 ft^2, ☐ Greater 1000 ft^2

A	B	C	D	E	F	G	H
#/Type/Pos. (Front, Left, Rear, Right, Skylight)	Orientation	Proposed Addition's CFA[1, 2, 3]	Proposed Addition's Fenestration Area (ft^2)[4]	Fenestration Area Removed to make way for Addition (ft^2)[2]	Total Area Added Fenestration[2] (D - E)	Total % of West Facing Fenestration[2] (G/C) x 100%	Total % of Fenestration[2, 3, 4] (F/C) x 100%
	North						
	South						
	East						
	West[4]						
					Total		

1) Additions ≤100 sf are allowed to install up to 50ft^2 of fenestration and are exempt from the 5% west facing and 20% maximum total area limits and shall meet the U-factor and SHGC requirements of Package D. See Table 8-2 in the Residential Manual. Note: Leave columns E, F, G, H, and I blank.
2) Additions ≤1,000 ft², the maximum net allowed fenestration is 20% and may be increased additionally to by the amount of glazing removed in the wall that separates the addition from the existing house. However, the total West facing fenestration can not exceed 5% of the proposed addition's CFA including skylights orientated in any direction and tilted with a pitch of < 1:12. Column G can not exceed 5% and Column H not exceed 20%.
3) Additions >1,000 ft², must meet Package D requirements. See Table 8-2 and Table 151-C in Appendix B of the RM or use Performance Approach.
4) The 5%west orientation restrictions are only for Climate zones 2, 4, and 7-15; for Climate Zones 2, 4 and 7-15 enter **zero** (0) in column E.

FENESTRATION PRODUCTS: ALTERATIONS

Use this table for alterations to an existing building where fenestrations products (windows) are being removed and/or added.

A	B	C	D	E	F	G	H	I
Existing CFA (ft^2)	Existing Orientation	Existing Area (ft^2)	Removed Orientation	Removed Area (ft2)	Proposed Installed Orientation	Proposed Installed New Area (ft2)	Total Net Fenestration (ft2) (C-E+G)	Total % of Fenestration[1, 2] (H/A) x 100% Max of 2
	North		North		North			
	South		South		South			
	East		East		East			
	West		West		West			
	Total		Total		Total			

1) When 50 ft^2 or more of fenestration area is added to an existing building, then the fenestration must meet the requirements of Package D.
2) The area requirement for the total fenestration area for the whole building, including the added fenestration, must not exceed 20%. Otherwise, the Performance Approach must be used. See Section 8.3.3 in the RM for further details.

RESIDENTIAL KITCHEN LIGHTING WORKSHEET WS-5R

Project Title	Date

At least 50% of the total rated wattage of permanently installed luminaires in the kitchen must be in luminaires that are high efficacy luminaires as defined in Table 150-C. Luminaires that are not high efficacy must be switched separately.

Kitchen Lighting Schedule. Provide the following information for all luminaires to be installed in kitchens.

Luminaire Type	High Efficacy?	Watts	x	Quantity	=	High Efficacy Watts	or	Other Watts
	Yes □ *No* □		x		=		or	
	Yes □ *No* □		x		=		or	
	Yes □ *No* □		x		=		or	
	Yes □ *No* □		x		=		or	
	Yes □ *No* □		x		=		or	
				Total:	A:		B:	
					COMPLIES IF A ≥ B		***Yes*** □	***No*** □

Rules for Determining Residential Kitchen Luminaire Wattage

Screw Base Sockets §130(c) 1
(Not containing permanently installed ballasts) The maximum relamping rated wattage of the luminaire, as listed on a permanent factory-installed label (luminaire wattage is not based on type or wattage of lamp that is used).

Permanently or Remotely Installed Ballasts §130(c) 2
The operating input wattage of the rated lamp/ballast combination based on values published in manufacturer's catalogs based on independent testing lab reports.

Line Voltage Track Lighting (90 through 480 volts) §130(c) 3

1. Volt-ampere (VA) rating of the branch circuit(s) feeding the tracks;
2. For tracks equipped with an integral current limiter, the higher of;
   - The wattage (or VA) rating of an approved integral current limiter controlling the track system or
   - 15 watts per linear foot of the track; or
3. For tracks without an integral current limiter, the higher of;
   - 45 W per linear foot of the track or
   - The total wattage of all of the luminaires included in the system.

Low Voltage Track Lighting (less than 90 volts) §130(c) 4
Rated wattage of the transformer feeding the system, as shown on a permanent factory-installed label

Other Lighting §130(c) 5
(Lighting systems that are not addressed in §130 (c) 1-4) The maximum rated wattage, or operating input wattage of the system, listed on a permanent factory installed label, or published in manufacturer's catalogs, based on independent testing lab reports.

EXAMPLE

RESIDENTIAL KITCHEN LIGHTING WORKSHEET WS-5R

Project Title	Date

Kitchen Lighting Schedule. Provide the following information for all luminaires to be installed in kitchens.

Luminaire Type	High Efficacy (y/n)	Watts	x	Quantity	=	High Efficacy Watts	or	Other Watts
CFL-1	*Yes*	*26*	x	*5*	=	*130*	or	
MR-16	*No*	*55*	x	*2*	=		or	*110*
			x		=		or	
			x		=		or	
			x		=		or	
				Total:	A:	*130*	B:	110
					COMPLIES IF A ≥ B		***Yes*** ☑	***No*** □

CERTIFICATE OF FIELD VERIFICATION & DIAGNOSTIC TESTING (Page 1 of 8)	CF-4R
Project Address	Builder or Installer Name
Builder or Installer Contact Telephone	Plan/Permit (Additions or Alterations) Number
HERS Rater Telephone	Sample Group Number
Compliance Method (Prescriptive)	Climate Zone
Certifying Signature Date	Sample House Number
Firm	HERS Provider
Street Address:	City/State/Zip:

Copies to: **BUILDER, HERS PROVIDER AND BUILDING DEPARTMENT**

HERS RATER COMPLIANCE STATEMENT

The house was: ✓ ☐ Tested ✓ ☐ Approved as part of sample testing, but was not tested

As the HERS rater providing diagnostic testing and field verification, I certify that the house identified on this form complies with the diagnostic tested compliance requirements as checked ✓ on this form. The HERS rater must check and verify that the new distribution system is fully ducted and correct tape is used before a CF-4R may be released on every tested building. The HERS rater must not release the CF-4R until a properly completed and signed CF-6R has been received for the sample and tested buildings.

- ☐ The installer has provided a copy of CF-6R (Installation Certificate).
- ☐ New ducts are fully ducted (i.e., does not use building cavities as plenums or platform returns in lieu of ducts).
- ☐ New ducts with cloth backed, rubber adhesive duct tape is installed, mastic and draw bands are used in combination with cloth backed, rubber adhesive duct tape to seal leaks at duct connections.).

✓ ☐ **MINIMUM REQUIREMENTS FOR DUCT LEAKAGE REDUCTION COMPLIANCE CREDIT**

Procedures for field verification and diagnostic testing of air distribution systems are available in RACM, Appendix RC4.3.

Duct Diagnostic Leakage Testing Results

NEW CONSTRUCTION:			
	Duct Pressurization Test Results (CFM @ 25 Pa)	Measured Values	
1	Enter Tested Leakage Flow in CFM:		
2	Fan Flow: Calculated (Nominal ✓ ☐ Cooling ✓ ☐ Heating) or ✓ ☐ Measured Enter Total Fan Flow in CFM:		✓ ✓
3	Pass if Leakage Percentage < 6% [100 x [_____(Line # 1) / _____(Line # 2)]]		☐ Pass ☐ Fail
ALTERATIONS: Duct System and/or HVAC Equipment Change-Out			
4	Enter Tested Leakage Flow in CFM from CF-6R: **Pre-Test** of Existing Duct System Prior to Duct System Alteration and/or Equipment Change-Out.		
5	Enter Tested Leakage Flow in CFM: **Final Test** of New Duct System or Altered Duct System for Duct System Alteration and/or Equipment Change-Out.		
6	Enter Reduction in Leakage for Altered Duct System [_____(Line # 4) Minus _____(Line # 5)] (Only if Applicable)		
7	Enter Tested Leakage Flow in CFM to Outside (Only if Applicable)		✓ ✓
8	Entire New Duct System - Pass if Leakage Percentage < 6% [100 x [_____(Line # 5) / _____Line # 2)]]		☐ Pass ☐ Fail
TEST OR VERIFICATION STANDARDS: For Altered Duct System and/or HVAC Equipment Change-Out Use one of the following four Test or Verification Standards for compliance:			✓ ✓
9	Pass if Leakage Percentage < 15% [100 x [_____(Line # 5) / _____ (Line # 2)]]		☐ Pass ☐ Fail
10	Pass if Leakage to Outside Percentage < 10% [100 x [_____(Line # 7) / _____ (Line # 2)]]		☐ Pass ☐ Fail
11	Pass if Leakage Reduction Percentage > 60% [100 x [_____(Line # 6) / _____ (Line # 4)]] and Verification by Smoke Test and Visual Inspection		☐ Pass ☐ Fail
	Pass if Sealing of all Accessible Leaks and Verification by Smoke Test and Visual Inspection		☐ Pass ☐ Fail
	Pass if One of Lines # 9 through # 12 pass		☐ Pass ☐ Fail

Project Address	Builders Name

Copies to: **BUILDER, HERS PROVIDER AND BUILDING DEPARTMENT**

✓ ☐ DIAGNOSTIC SUPPLY DUCT LOCATION, SURFACE AREA AND R-VALUE

Procedures for field verification and diagnostic testing for this group compliance credits are available in RACM, Appendix RC, RE & RH.

✓ ☐ LESS THAN 12 LINEAL FEET OF SUPPLY DUCT OUTSIDE OF CONDITIONED SPACE COMPLIANCE CREDIT

✓	☐Yes	☐No	Less than 12 lineal feet of supply duct outside of conditioned space.		
			Yes to this compliance credit is a pass	✓ ☐ Pass	✓ ☐ Fail

✓ ☐ SUPPLY DUCTS LOCATED IN CONDITIONED SPACE COMPLIANCE CREDIT

✓	☐ Yes	☐ No	Ducts are located within the conditioned volume of building.		
			Yes to this compliance credit is a pass	✓ ☐ Pass	✓ ☐ Fail

Duct System Design verification is required for a compliance credit for the following:

1. **Supply duct surface area reduction**
2. **Buried supply ducts on the ceiling**
3. **Deeply buried supply ducts**

✓ ☐ DUCT SYSTEM DESIGN VERIFICATION

✓	☐ Yes	☐ No	Adequate airflow verified		
✓	☐ Yes	☐ No	The duct system design plan meets the requirements specified in RACM, Appendix RE, Section RE.4.2		
✓	☐ Yes	☐ No	The duct system design plan exists on building plans		
✓	☐ Yes	☐ No	Duct sizes, duct system layout and locations of supply & return registers match the duct system design plan		
			Yes to all is a pass	✓ ☐ Pass	✓ ☐ Fail

✓ ☐ SUPPLY DUCTS SURFACE AREA REDUCTION COMPLIANCE CREDIT

Attic	Crawl Space	Basement	Covered	Deeply Covered	Other	Duct Diameter	R-4.2 Surface Area	R-6.0 Surface Area	R-8.0 Surface Area
☐	☐	☐	☐	☐	☐				
☐	☐	☐	☐	☐	☐				
☐	☐	☐	☐	☐	☐				
☐	☐	☐	☐	☐	☐				
☐	☐	☐	☐	☐	☐				
☐	☐	☐	☐	☐	☐				
☐	☐	☐	☐	☐	☐				
☐	☐	☐	☐	☐	☐				
					Total Surface Area for Each R-Value =				
✓	☐ Yes	☐ No	Duct Surface Area matches Performance's CF-1R?					✓	✓
					Yes to all is a pass			☐ Pass	☐ Fail

✓ ☐ BURIED DUCTS ON THE CEILING COMPLIANCE CREDIT

✓	☐ Yes	☐ No	Buried Ducts on the Ceiling		
✓	☐ Yes	☐ No	Verified High Insulation Installation Quality	✓	✓
Yes to duct system design, supply duct surface area reduction and this compliance credit is a pass				☐ Pass	☐ Fail

✓ ☐ DEEPLY BURIED DUCTS COMPLIANCE CREDIT

✓	☐ Yes	☐ No	Deeply Buried Ducts		
✓	☐ Yes	☐ No	Verified High Insulation Installation Quality	✓	✓
Yes to duct system design, supply duct surface area reduction and this compliance credit is a pass				☐ Pass	☐ Fail

Project Address	Builder Name
Builder Contact Telephone	Plan Number
HERS Rater Telephone	Sample Group Number
Compliance Method (Prescriptive)	Climate Zone
Certifying Signature Date	Sample House Number
Firm	HERS Provider
Street Address:	City/State/Zip:

Copies to: **BUILDER, HERS PROVIDER AND BUILDING DEPARTMENT**

HERS RATER COMPLIANCE STATEMENT

The house was: ✓☐ Tested ✓☐ Approved as part of sample testing, but was not tested

As the HERS rater providing diagnostic testing and field verification, I certify that the house identified on this form complies with the diagnostic tested compliance requirements as checked on this form.

✓☐ The installer has provided a copy of CF-6R (Installation Certificate).

✓☐ THERMOSTATIC EXPANSION VALVE (TXV)

Procedures for field verification of thermostatic expansion valves are available in RACM, Appendix RI.

				✓	✓
✓	☐ Yes	☐ No	Access is provided for inspection. The procedure shall consist of visual verification that the TXV is installed on the system and installation of the specific equipment shall be verified.	☐	☐
			Yes is a pass	Pass	Fail

✓☐ REFRIGERANT CHARGE MEASUREMENT

Verification for Required Refrigerant Charge for Split System Space Cooling Systems without Thermostatic Expansion Valves

Outdoor Unit Serial #		
Location		
Outdoor Unit Make		
Outdoor Unit Model		
Cooling Capacity		Btu/hr
Date of Verification		
Date of Refrigerant Gauge Calibration		(must be checked monthly)
Date of Thermocouple Calibration		(must be checked monthly)

Standard Charge Measurement (outdoor air dry-bulb 55 °F and above):

Note: The system should be installed and charged in accordance with the manufacturer's specifications and installer verification shall be documented on CF-6R before starting this procedure. If outdoor air dry-bulb is below 55 °F rater shall use the Alternative Charge Measure Procedure

Procedures for Determining Refrigerant Charge using the Standard Method are available in RACM, Appendix RD2.

✓	☐ Yes	☐ No	A copy of CF-6R (Installation Certificate) has been provided with refrigerant charge measurement documented.

Project Address	Builders Name

Copies to: **BUILDER, HERS PROVIDER AND BUILDING DEPARTMENT**

Measured Temperatures

Supply (evaporator leaving) air dry-bulb temperature (Tsupply, db)		°F
Return (evaporator entering) air dry-bulb temperature (Treturn, db)		°F
Return (evaporator entering) air wet-bulb temperature (Treturn, wb)		°F
Evaporator saturation temperature (Tevaporator, sat)		°F
Suction line temperature (Tsuction, db)		°F
Condenser (entering) air dry-bulb temperature (Tcondenser, db)		°F

Superheat Charge Method Calculations for Refrigerant Charge

Actual Superheat = Tsuction, db – Tevaporator, sat		°F
Target Superheat (from Table RD-2)		°F
Actual Superheat – Target Superheat (System passes if between -5 and +5°F)		°F

Temperature Split Method Calculations for Adequate Airflow
Split Method Calculation is not necessary if Adequate Airflow credit is taken

Actual Temperature Split = T return, db - Tsupply, db		°F
Target Temperature Split (from Table RD3)		°F
Actual Temperature Split - Target Temperature Split (System passes if between -3°F and +3°F or, upon remeasurement, if between -3°F and -100°F)		°F

Standard Charge Measurement Summary:
System shall pass both refrigerant charge and adequate airflow calculation criteria from the same measurements. If corrective actions were taken, both criteria must be remeasured and recalculated

✓	☐ Yes	☐ No	System Passes

Alternative Charge Measurement (outdoor air dry-bulb below 55 °F)
Note: The system should be installed and charged in accordance with the manufacturer's specifications and installer verification shall be documented on CF-6R before starting this procedure. If outdoor air dry-bulb is 55 °F or above, rater shall use the Standard Charge Measure Procedure:
Procedures for Determining Refrigerant Charge using the Alternative Method are available in RACM, Appendix RD3.

✓	☐ Yes	☐ No	*A copy of CF-6R (Installation Certificate) has been provided with refrigerant charge measurement documented.*

Weigh-In Charging Method for Refrigerant Charge

Actual liquid line length:		ft
Manufacturer's Standard liquid line length:		ft
Difference (Actual – Standard):		ft

Manufacturer's correction (ounces per foot) _____x difference in length =_____ounces
("+ " = add ounces) ("-" = remove ounces)

Alternative Charge Measurement Summary:
System shall pass both refrigerant charge and adequate airflow calculation criteria from the same measurements. If corrective actions were taken, both criteria must be remeasured and recalculated.

✓	☐ Yes	☐ No	*System Passes*

Project Address	Builder Name
Builder Contact Telephone	Plan Number
HERS Rater Telephone	Sample Group Number
Certifying Signature Date	Sample House Number
Firm	HERS Provider
Street Address:	City/State/Zip:

Copies to: **BUILDER, HERS PROVIDER AND BUILDING DEPARTMENT**

HERS RATER COMPLIANCE STATEMENT

The house was: ✓ ☐ Tested ✓ ☐ Approved as part of sample testing, but was not tested

As the HERS rater providing diagnostic testing and field verification, I certify that the house identified on this form complies with the diagnostic tested compliance requirements as checked on this form.

✓ ☐ The installer has provided a copy of CF-6R (Installation Certificate).

✓ ☐ ADEQUATE AIRFLOW VERIFICATION

Procedures for field verification and diagnostic testing of adequate airflow are available in RACM, Appendix RE4.1.

	Method For Airflow Measurement				
✓	☐ Yes	☐ No	Duct design exists on plans		
☐	RE4.1.1		Diagnostic Fan Flow Using Flow Capture Hood		
☐	RE4.1.2		Diagnostic Fan Flow Using Plenum Pressure Matching		
☐	RE4.1.3		Diagnostic Fan Flow Using Flow Grid Measurement		
			Measured Airflow:		Total CFM
			Rated Tons:		cfm/ton
				✓	✓
✓	☐ Yes	☐ No	Measured airflow is greater than the criteria in Table RE-2	☐	☐
			Yes is a pass	Pass	Fail

✓ ☐ MAXIMUM COOLING CAPACITY

Procedures for determining maximum cooling load capacity are available in RACM, Appendix RF3.

1	✓	☐ Yes	☐ No	Adequate airflow verified (see adequate airflow credit)		
2	✓	☐ Yes	☐ No	Refrigerant charge or TXV		
3	✓	☐ Yes	☐ No	Duct leakage reduction credit verified		
4	✓	☐ Yes	☐ No	Cooling capacities of installed systems are ≤ to maximum cooling capacity indicated on the Performance's CF-1R and RF-3.		
5	✓	☐ Yes	☐ No	If the cooling capacities of installed systems are > than maximum cooling capacity in the CF-1R, then the electrical input for the installed systems must be ≤ to electrical input in the CF-1R and RF-4.	✓ ☐	✓ ☐
				Yes to 1, 2, and 3; and Yes to either 4 or 5 is a pass	Pass	Fail

✓ ☐ HIGH EER AIR CONDITIONER

Procedures for verification are available in RACM, Appendix RI.

1	✓	☐ Yes	☐ No	EER values of installed systems match the CF-1R		
2	✓	☐ Yes	☐ No	For split system, indoor coil is matched to outdoor coil	✓	✓
3	✓	☐ Yes	☐ No	Time Delay Relay Verified (If Required)	☐	☐
				Yes to 1 and 2; and 3 (If Required) is a pass	Pass	Fail

Project Address	Builder Name
Builder Contact Telephone	Plan Number
HERS Rater Telephone	Sample Group Number
Certifying Signature Date	Sample House Number
Firm	HERS Provider
Street Address:	City/State/Zip:

Copies to: **BUILDER, HERS PROVIDER AND BUILDING DEPARTMENT**

HERS RATER COMPLIANCE STATEMENT

The house was: ✓ ☐ Tested ✓ ☐ Approved as part of sample testing, but was not tested

As the HERS rater providing diagnostic testing and field verification, I certify that the house identified on this form complies with the diagnostic tested compliance requirements as checked on this form.

✓ ☐ The installer has provided a copy of CF-6R (Installation Certificate).

✓ ☐ FAN WATT DRAW

Procedures for measuring the air handler watt draw are available in RACM, Appendix RE3.2.

✓ **Method For Fan Watt Draw Measurement**					
☐	RE3.2.1	Portable Watt Meter Measurement			
☐	RE3.2.2	Utility Revenue Meter Measurement			
		Measured Fan watt Draw: (enter watts here)			Watts
		Measured Fan Flow (Enter total cfm from airflow verification)			cfm
		Enter results of Watts/cfm:			Watts/cfm
			✓	✓	
✓ ☐ Yes	☐ No	Calculated fan watt/cfm is equal to or lower than the fan watt/cfm draw documented in CF-1R	☐	☐	
		Yes is a pass	Pass	Fail	

HERS RATER COMPLIANCE STATEMENT

The house was: ✓ ☐ Tested ✓ ☐ Approved as part of sample testing, but was not tested

As the HERS rater providing diagnostic testing and field verification, I certify that the house identified on this form complies with the diagnostic tested compliance requirements as checked on this form.

✓ ☐ The installer has provided a copy of CF-6R (Installation Certificate).

✓ ☐ MINIMUM REQUIREMENTS FOR INFILTRATION REDUCTION COMPLIANCE CREDIT

Procedures for field verification and diagnostic testing of infiltration reduction are available in RACM Section 3.5.

Diagnostic Testing Results

	✓	✓	Building Envelope Leakage (CFM @ 50 Pa) as measured by Rater:		
1.	☐ Yes	☐ No	Is measured envelope leakage less than or equal to the required level from CF-1R?		
2.	☐ Yes	☐ No	Is Mechanical Ventilation shown as required on the CF-1R?		
2a.	☐ Yes	☐ No	If Mechanical Ventilation is required on the CF-1R (Yes in line 2), has it been installed?		
2b.	☐ Yes	☐ No	Check this box yes if mechanical ventilation is required (Yes in line 2) and ventilation fan watts are no greater than shown on CF-1R.		
3.	☐ Yes	☐ No	Check this box yes if measured building infiltration (CFM @ 50 Pa) is greater than the CFM @ 50 values shown for an SLA of 1.5 on CF-1R (If this box is checked no, mechanical ventilation is required.)		
4.	☐ Yes	☐ No	Check this box yes if measured building infiltration (CFM @ 50 Pa) is less than the CFM @ 50 values shown for an SLA of 1.5 on CF-1R, mechanical ventilation is installed and house pressure is greater than minus 5 Pascal with all exhaust fans operating.	✓	✓
Pass if: a) Yes in line 1 and line 3, or b) Yes in line 1 and line2, 2a, and 2b, or c)Yes in line 1 and line 4, Otherwise Fail.				☐ Pass	☐ Fail

Project Address	Builder Name
Builder Contact Telephone	Plan Number
HERS Rater Telephone	Sample Group Number
Certifying Signature Date	Sample House Number
Firm	HERS Provider
Street Address:	City/State/Zip:

Copies to: **BUILDER, HERS PROVIDER AND BUILDING DEPARTMENT**

HERS RATER COMPLIANCE STATEMENT

The house was: ✓ ☐ Tested ✓ ☐ Approved as part of sample testing, but was not tested

As the HERS rater providing diagnostic testing and field verification, I certify that the house identified on this form complies with all applicable requirements of the "High Quality Installation of Insulation" protocols as specified in the Residential ACM, Appendix RH and as checked on this form. Note that to PASS and receive compliance credit, NONE of the BOXES below may be checked "No" and the first three boxes also must be checked. Check "NA" only if the item is not part of the design of the building (i.e., single story buildings do not have rim joists or there may be no recessed can lights installed, etc.).

✓ ☐ **REQUIREMENTS FOR "HIGH QUALITY INSTALLATION OF INSULATION" COMPLIANCE CREDIT**

- ✓ ☐ The building is wood frame construction with wall stud cavities, ceilings, and roof assemblies insulated with mineral fiber or cellulose insulation in low-rise residential buildings.
- ✓ ☐ Description of insulation, (CF-6R, formerly IC-1) signed by the installer stating: insulation manufacturer's name, material identification, installed R-values, and for loose-fill insulation: minimum weight per square foot and minimum inches.
- ✓ ☐ Installation Certificate, (CF-6R) signed by the installer certifying that the installation meets all applicable requirements as specified in the High Quality Insulation Installation Procedures (ACM, Appendix RH).

✓ **FLOOR**

☐ Yes	☐ No	☐ NA	All floor joist cavity insulation installed to uniformly fit the cavity side-to-side and end-to-end
☐ Yes	☐ No	☐ NA	Insulation in contact with the subfloor or rim joists insulated
☐ Yes	☐ No	☐ NA	Insulation properly supported to avoid gaps, voids, and compression
✓ **WALLS**			
☐ Yes	☐ No	☐ NA	Wall stud cavity insulation uniformly fills the cavity side-to-side, top-to-bottom, and front-to-back
☐ Yes	☐ No	☐ NA	No gaps
☐ Yes	☐ No	☐ NA	No voids over ¾" deep or more than 10% of the batt surface area.
☐ Yes	☐ No	☐ NA	Hard to access wall stud cavities such as; corner channels, wall intersections, and behind tub/shower enclosures insulated to proper R-Value
☐ Yes	☐ No	☐ NA	Small spaces filled
☐ Yes	☐ No	☐ NA	Rim-joists insulated
☐ Yes	☐ No	☐ NA	Wall stud cavities caulked or foamed to provide an air tight envelope

Project Address	Builders Name

✓ ROOF/CEILING PREPARATION			
☐ Yes	☐ No	☐ NA	All draft stops in place to form a continuous ceiling and wall air barrier
☐ Yes	☐ No	☐ NA	All drops covered with hard covers
☐ Yes	☐ No	☐ NA	All draft stops and hard covers caulked or foamed to provide an air tight envelope
☐ Yes	☐ No	☐ NA	All recessed light fixtures IC and air tight (AT) rated and sealed with a gasket or caulk between the housing and the ceiling
☐ Yes	☐ No	☐ NA	Floor cavities on multiple-story buildings have air tight draft stops to all adjoining attics
☐ Yes	☐ No	☐ NA	Eave vents prepared for blown insulation - maintain net free-ventilation area
☐ Yes	☐ No	☐ NA	Knee walls insulated or prepared for blown insulation
☐ Yes	☐ No	☐ NA	Area under equipment platforms and cat-walks insulated or accessible for blown insulation
☐ Yes	☐ No	☐ NA	Attic rulers installed

✓ ROOF/CEILING BATTS			
☐ Yes	☐ No	☐ NA	No gaps
☐ Yes	☐ No	☐ NA	No voids over ¾ in. deep or more than 10% of the batt surface area
☐ Yes	☐ No	☐ NA	Insulation in contact with the air-barrier
☐ Yes	☐ No	☐ NA	Recessed light fixtures covered
☐ Yes	☐ No	☐ NA	Net free-ventilation area maintained at eave vents

✓ ROOF/CEILING LOOSE-FILL			
☐ Yes	☐ No	☐ NA	Insulation uniformly covers the entire ceiling (or roof) area from the outside of all exterior walls
☐ Yes	☐ No	☐ NA	Baffles installed at eaves vents or soffit vents - maintain net free-ventilation area of eave vent
☐ Yes	☐ No	☐ NA	Attic access insulated
☐ Yes	☐ No	☐ NA	Recessed light fixtures covered
☐ Yes	☐ No	☐ NA	Insulation at proper depth – insulation rulers visible and indicating proper depth and R-value
☐ Yes	☐ No	☐ NA	Loose-fill mineral fiber insulation meets or exceeds manufacturer's minimum weight and thickness requirement for the target R-value. Target R-value _____ Manufacturer's minimum required weight for the target R-value _____ (pounds-per-square foot). Sample weight _____ (pounds per square foot).
☐ Yes	☐ No	☐ NA	Manufacturer's minimum required thickness at time of installation _____ (inches) Manufacturer's minimum required settled thickness _____ (inches). Number of days since loose-fill insulation was installed _____ (days). At the time of installation, the insulation shall be greater than or equal to the manufacturer's minimum initial insulation thickness. If the HERS rater does not verify the insulation at the time of installation, and if the loose-fill insulation has been in place less than seven days the thickness shall be greater than the manufacturer's minimum required thickness at the time of installation less 1/2 inch to account for settling. If the insulation has been in place for seven days or longer the insulation thickness shall be greater than or equal to the manufacturer's minimum required settled thickness. Minimum thickness measured (inches).

Site Address	Permit Number

Installation certificates (CF-6R) are required for each and every dwelling unit. When the installation of measures that require field verification and diagnostic testing is complete, the builder or the builder's subcontractor shall complete diagnostic testing and the procedures specified in this section. When the installation is complete, the builder or the builder's subcontractor shall complete the CF-6R (Installation Certificate), and keep it at the building site for review by the building department. The builder also shall provide a copy of the Installation Certificate to the HERS rater for any measures requiring field verification and diagnostic testing, per Section 10-103(a).

WATER HEATING SYSTEMS:

Heater Type	CEC Certified Mfr Name & Model Number	Distribution Type (Std, Point-of-Use, etc)	If Recirculation, Control Type	# of Identical Systems	Rated Input (kW or Btu/hr)[1]	Tank Volume (gallons)	Efficiency (EF, RE)[2]	Standby Loss (%)[2]	External Insulation R-value[2]

1 For **small gas storage** (rated input of less than or equal to 75,000 Btu/hr), **electric resistance** and **heat pump water heaters**, list Energy Factor (EF). For **large gas storage water heaters** (rated input of greater than 75,000 Btu/hr), list Recovery (RE), Thermal Efficiency, Standby Loss and Rated Input. For **instantaneous gas water heaters**, list Thermal Efficiency and Rated Input.

2. R-12 external insulation is mandatory for storage water heaters with an energy factor of less than 0.58.

Kitchen Piping:
If indicated on the CF-1R, all hot water piping ≥ 3/4 inches in diameter that runs from the hot water source to the kitchen fixtures is insulated.

Faucets & Shower Heads:
All faucets and showerheads installed are certified to the Energy Commission, pursuant to Title 24, Part 6, Section 111.

Central Water Heating in Buildings with Multiple Dwelling Units (required for prescriptive)

✓

☐ All hot water piping in main circulating loop is insulated to requirements of §150(j)

☐ Central hot water systems serving six or fewer dwelling units which have (1) less than 25' of distribution piping outdoors; (2) zero distribution piping underground; (3) no recirculation pump; and (4) insulation on distribution piping that meets the requirements of Section 150(j)

☐ Central hot water systems serving more than 6 dwelling units - presence of either a time control or a time/temperature control

✓ ☐ I, the undersigned, verify that equipment listed above my signature is: 1) the actual equipment installed; 2) equivalent to or more efficient than that specified in the certificate of compliance (Form CF-1R) submitted for compliance with the *Energy Efficiency Standards* for residential buildings; and 3) equipment that meets or exceeds the appropriate requirements for manufactured devices (from the *Appliance Efficiency Regulations* or Part 6), where applicable.

Installing Subcontractor (Co. Name) OR General Contractor (Co. Name) OR Owner	
Signature:	Date:

Copies to: BUILDING DEPARTMENT, HERS RATER (IF APPLICABLE) BUILDING OWNER AT OCCUPANCY

Site Address	Permit Number

An installation certificate is required to be posted at the building site or made available for all appropriate inspections. (The information provided on this form is required) After completion of final inspection, a copy must be provided to the building department (upon request) and the building owner at occupancy, per Section 10-103(a).

FENESTRATION/GLAZING:

Item	Manufacturer/Brand Name (GROUP LIKE RODUCTS)	Product U-factor[1] (≤ CF-1R value)[2]	Product SHGC[1] (≤CF-1R value)[2]	# of Panes	Total Quantity of Like Product (*Optional*)	Area Square Feet	Exterior Shading Device or Overhang	Comments/Location/ Special Features
1.								
2.								
3.								
4.								
5.								
6.								
7.								
8.								
9.								
10.								
11.								
12.								
13.								
14.								
15.								

1) Use values from a fenestration product's NFRC label. For fenestration products without an NFRC label, use the default values from Section 116 of the Energy Efficiency Standards.

2) Installed U-factor must be less than or equal to values from CF-1R. Installed SHGC must be less than or equal to values from CF-1R, or a shading device (exterior or overhang) is installed as specified on the CF-1R. Alternatively, installed weighted average U-factors for the total fenestration area are less than or equal to values from CF-1R. If using default table SHGC values from §116 identify whether tinted or not.

✓ ☐ I, the undersigned, verify that the fenestration/glazing listed above my signature: 1) is the actual fenestration product installed; 2) is equivalent to or has a lower U-factor and lower SHGC than that specified in the certificate of compliance (Form CF-1R) submitted for compliance with the *Energy Efficiency Standards* for residential buildings; and 3) the product meets or exceeds the appropriate requirements for manufactured devices (from Part 6), where applicable.

Item #s (if applicable)	Signature Date	Installing Subcontractor (Co. Name) OR General Contractor (Co. Name) OR Owner OR Window Distributor
Item #s (if applicable)	Signature Date	Installing Subcontractor (Co. Name) OR General Contractor (Co. Name) OR Owner OR Window Distributor
Item #s (if applicable)	Signature Date	Installing Subcontractor (Co. Name) OR General Contractor (Co. Name) OR Owner OR Window Distributor

Copies to: Building Department , HERS Rater (if applicable) Building Owner at Occupancy

Site Address	Permit Number

An installation certificate is required to be posted at the building site or made available for all appropriate inspections. (The information provided on this form is required) After completion of final inspection, a copy must be provided to the building department (upon request) and the building owner at occupancy, per Section 10-103(a).

HVAC SYSTEMS:

Heating Equipment

Equip Type (pkg. heat pump)	CEC Certified Mfr. Name and Model Number	# of Identical Systems	Efficiency (AFUE, etc.)[1] (≥CF-1R value)	Duct Location (attic, etc.)	Duct or Piping R-value	Heating Load (Btu/hr)	Heating Capacity (Btu/hr)

Cooling Equipment

Equip Type (pkg. heat pump)	CEC Certified Mfr. Name and Model Number	# of Identical Systems	Efficiency (SEER or EER)[1] (≥CF-1R value)	Duct Location (attic, etc.)	Duct R-value	Cooling Load (Btu/hr)	Cooling Capacity (Btu/hr)

1. ≥ symbol reads *greater than or equal to what is indicated on the CF-1R value.*
   Include both SEER and EER if compliance credit for high EER air conditioner is claimed.

✓ ☐I I, the undersigned, verify that equipment listed above is: 1) is the actual equipment installed, 2) equivalent to or more efficient than that specified in the certificate of compliance (Form CF-1R) submitted for compliance with the *Energy Efficiency Standards* for residential buildings, and 3) equipment that meets or exceeds the appropriate requirements for manufactured devices (from the *Appliance Efficiency Regulations* or Part 6), where applicable.

Installing Subcontractor (Co. Name) OR General Contractor (Co. Name) OR Owner	
Signature:	Date:

Copies to: BUILDING DEPARTMENT, HERS RATER (IF APPLICABLE) BUILDING OWNER AT OCCUPANCY

Site Address	Permit Number

INSTALLER COMPLIANCE STATEMENT FOR DUCT LEAKAGE

INSTALLER COMPLIANCE STATEMENT

The building was: ✓ ☐ Tested at Final ✓ ☐ Tested at Rough-in

INSTALLER VISUAL INSPECTION AT FINAL CONSTRUCTION STAGE FOR NEW DUCTS:

☐ Remove at least one supply and one return register, and verify that the spaces between the register boot and the interior finishing wall are properly sealed.

☐ If the house rough-in duct leakage test was conducted without an air handler installed, inspect the connection points between the air handler and the supply and return plenums to verify that the connection points are properly sealed.

☐ Inspect all joints to ensure that no cloth backed rubber adhesive duct tape is used *on new ducts.*

✓ ☐ **DUCT LEAKAGE REDUCTION**

Procedures for field verification and diagnostic testing of air distribution systems are available in RACM, Appendix RC4.3

NEW CONSTRUCTION:			
	Duct Pressurization Test Results (CFM @ 25 Pa)	Measured Values	
1	Enter Tested Leakage Flow in CFM:		
2	Fan Flow: Calculated (Nominal: ✓ ☐ Cooling ✓ ☐ Heating) or ✓ ☐ Measured If Fan Flow is Calculated as 400 cfm/ton x number of tons or as 21.7 cfm/(kBtu/hr) x Heating Capacity in Thousands of Btu/hr, enter total calculated or measured fan flow in CFM here:		✓ ✓
3	Pass if Leakage Percentage < 6% for Final or < 4% at Rough-in without air handler: [100 x [_____(Line # 1) / _____(Line # 2)]]		☐ Pass ☐ Fail
ALTERATIONS: Duct System and/or HVAC Equipment Change-Out			
4	Enter Tested Leakage Flow in CFM from **Pre-Test** of Existing Duct System Prior to Duct System Alteration and/or Equipment Change-Out.		
5	Enter Tested Leakage Flow in CFM from **Final Test** of New Duct System or Altered Duct System for Duct System Alteration and/or Equipment Change-Out.		
6	Enter Reduction in Leakage for Altered Duct System [_____(Line # 4) Minus _____(Line # 5)] – (Only if Applicable)		
7	Enter Tested Leakage Flow in CFM to Outside (Only if Applicable)		✓ ✓
8	Entire New Duct System - Pass if Leakage Percentage < 6% for Final. [100 x [_____(Line # 5) / _____Line # 2)]]		☐ Pass ☐ Fail
TEST OR VERIFICATION STANDARDS: For Altered Duct System and/or HVAC Equipment Change-Out Use one of the following four Test or Verification Standards for compliance:			✓ ✓
9	Pass if Leakage Percentage < 15% [100 x [_____(Line # 5) / _____ (Line # 2)]]		☐ Pass ☐ Fail
10	Pass if Leakage to Outside Percentage < 40% [100 x [_____ (Line # 7) /_____ (Line # 2)]]		☐ Pass ☐ Fail
11	Pass if Leakage Reduction Percentage > 60% [100 x [_____(Line # 6) / _____ (Line # 4)]] and Verification by Smoke Test and Visual Inspection		☐ Pass ☐ Fail
12	Pass if Sealing of all Accessible Leaks and Verification by Smoke Test and Visual Inspection		☐ Pass ☐ Fail
	Pass if One of Lines # 9 through # 12 pass		☐ Pass ☐ Fail

✓ ☐ I, the undersigned, verify that the above diagnostic test results were performed in conformance with the requirements for compliance credit. I, the undersigned, also certify that the newly installed or retrofit Air-Distribution System Ducts, Plenums and Fans comply with Mandatory requirements specified in Section 150 (m) of the 2005 Building Energy Efficiency standards.

Installing Subcontractor (Co. Name) OR General Contractor (Co. Name) OR Owner	
Signature:	Date:

Copies to: BUILDING DEPARTMENT, HERS RATER (IF APPLICABLE) BUILDING OWNER AT OCCUPANCY

Site Address	Permit Number

✓ ☐ **THERMOSTATIC EXPANSION VALVE (TXV)**

Procedures for field verification of thermostatic expansion valves are available in RACM, Appendix RI.

				✓	✓
✓	☐ Yes	☐ No	Access is provided for inspection. The procedure shall consist of visual verification that the TXV is installed on the system and installation of the specific equipment shall be verified.	☐	☐
			Yes is a pass	Pass	Fail

✓ ☐ **REFRIGERANT CHARGE MEASUREMENT**

Verification for Required Refrigerant Charge and Adequate Airflow for Split System Space Cooling Systems without Thermostatic Expansion Valves

Outdoor Unit Serial #		
Location		
Outdoor Unit Make		
Outdoor Unit Model		
Cooling Capacity		Btu/hr
Date of Verification		
Date of Refrigerant Gauge Calibration		(must be checked monthly)
Date of Thermocouple Calibration		(must be checked monthly)

Standard Charge Measurement Procedure (outdoor air dry-bulb 55°F and above):

Procedures for Determining Refrigerant Charge using the Standard Method are available in RACM, Appendix RD2.

Note: The system should be installed and charged in accordance with the manufacturer's specifications before starting this procedure.

Measured Temperatures

Supply (evaporator leaving) air dry-bulb temperature (Tsupply, db)		°F
Return (evaporator entering) air dry-bulb temperature (Treturn, db)		°F
Return (evaporator entering) air wet-bulb temperature (Treturn, wb)		°F
Evaporator saturation temperature (Tevaporator, sat)		°F
Suction line temperature (Tsuction, db)		°F
Condenser (entering) air dry-bulb temperature (Tcondenser, db)		°F

Superheat Charge Method Calculations for Refrigerant Charge

Actual Superheat = Tsuction, db – Tevaporator, sat		°F
Target Superheat (from Table RD-2)		°F
Actual Superheat – Target Superheat (System passes if between -5 and +5°F)		°F

Temperature Split Method Calculations for Adequate Airflow

Split Method Calculation is not necessary if Adequate Airflow credit is taken

Actual Temperature Split = T return, db Tsupply, db		°F
Target Temperature Split (from Table RD3)		°F
Actual Temperature Split Target Temperature Split (System passes if between -3°F and +3°F or, upon remeasurement, if between -3°F and -100°F)		°F

Site Address	Permit Number

Standard Charge Measurement Summary:

System shall pass both refrigerant charge and adequate airflow calculation criteria from the same measurements. If corrective actions were taken, both criteria must be remeasured and recalculated.

✓	☐ Yes	☐ No	System Passes

Alternate Charge Measurement Procedure (outdoor air dry-bulb below 55 ^{o}F)

Note: The system should be installed and charged in accordance with the manufacturer's specifications and installer verification shall be documented on CF-6R before starting this procedure. If outdoor air dry-bulb is 55 ^{o}F or above, installer shall use the Standard Charge Measure Procedure:

Procedures for Determining Refrigerant Charge using the Alternate Method are available in RACM, Appendix RD3.

Weigh-In Charging Method for Refrigerant Charge

Actual liquid line length:		ft
Manufacturer's Standard liquid line length:		ft
Difference (Actual – Standard):		ft
Manufacturer's correction (ounces per foot) _____x difference in length =_____ounces (+ = add) (- = remove)		

Measured Airflow Method for Adequate Airflow Verification *available in RACM, Appendix RD2.6*

Calculated Airflow: Cooling Capacity (Btu/hr)_____ X 0.033 (cfm/Btu-hr) = _____ CFM
Measured Airflow is _____CFM (Measured airflow must be greater than the calculated airflow).

Alternate Charge Measurement Summary:

System shall pass both refrigerant charge and adequate airflow calculation criteria from the same measurements. If corrective actions were taken, both criteria must be remeasured and recalculated.

✓	☐ Yes	☐ No	*System Passes*

Installing Subcontractor (Co. Name) OR General Contractor (Co. Name) OR Owner	
Signature:	Date:

Copies to: BUILDING DEPARTMENT, HERS RATER (IF APPLICABLE) BUILDING OWNER AT OCCUPANCY

Site Address	Permit Number

MISCELLANEOUS CREDITS

✓ ☐ DIAGNOSTIC SUPPLY DUCT LOCATION, SURFACE AREA AND R-VALUE

Procedures for field verification and diagnostic testing for this group compliance credits are available in RACM, Appendix RC, RE & RH.

✓ ☐ LESS THAN 12 LINEAL FEET OF SUPPLY DUCT OUTSIDE OF CONDITIONED SPACE COMPLIANCE CREDIT

✓	☐Yes	☐No	Less than 12 lineal feet of supply duct outside of conditioned space.		
			Yes to this compliance credit is a pass	✓ ☐ Pass	✓ ☐ Fail

✓ ☐ SUPPLY DUCTS LOCATED IN CONDITIONED SPACE COMPLIANCE CREDIT

✓	☐ Yes	☐ No	Ducts are located within the conditioned volume of building.		
			Yes to this compliance credit is a pass	✓ ☐ Pass	✓ ☐ Fail

Duct System Design verification is required for a compliance credit for the following:

1. **Supply duct surface area reduction**
2. **Buried supply ducts on the ceiling**
3. **Deeply buried supply ducts**

✓ ☐ DUCT SYSTEM DESIGN VERIFICATION

✓	☐ Yes	☐ No	Adequate airflow verified		
✓	☐ Yes	☐ No	The duct system design plan meets the requirements specified in RACM, Appendix RE, Section RE.4.2		
✓	☐ Yes	☐ No	The duct system design plan exists on building plans		
✓	☐ Yes	☐ No	Duct sizes, duct system layout and locations of supply & return registers match the duct system design plan		
			Yes to all is a pass	✓ ☐ Pass	✓ ☐ Fail

✓ ☐ SUPPLY DUCTS SURFACE AREA REDUCTION COMPLIANCE CREDIT

Attic	Crawl Space	Basement	Covered	Deeply Covered	Other	Duct Diameter	R-4.2 Surface Area	R-6.0 Surface Area	R-8.0 Surface Area
☐	☐	☐	☐	☐	☐				
☐	☐	☐	☐	☐	☐				
☐	☐	☐	☐	☐	☐				
☐	☐	☐	☐	☐	☐				
☐	☐	☐	☐	☐	☐				
☐	☐	☐	☐	☐	☐				
☐	☐	☐	☐	☐	☐				
						Total Surface Area for Each R-Value =			
✓	☐ Yes	☐ No	atches Performance's CF-1R?					✓	✓
						Yes to all is a pass		☐ Pass	☐ Fail

✓ ☐ BURIED DUCTS ON THE CEILING COMPLIANCE CREDIT

	☐ Yes	☐ No	Buried Ducts on the Ceiling		
	☐ Yes	☐ No	Verified High Insulation Installation Quality	✓	✓
Yes to duct system design, supply duct surface area reduction and this compliance credit is a pass				☐ Pass	☐ Fail

✓ ☐ DEEPLY BURIED DUCTS COMPLIANCE CREDIT

✓	☐ Yes	☐ No	Deeply Buried Ducts		
✓	☐ Yes	☐ No	Verified High Insulation Installation Quality	✓	✓
Yes to duct system design, supply duct surface area reduction and this compliance credit is a pass				☐Pass	☐ Fail

Copies to: BUILDING DEPARTMENT, HERS RATER (IF APPLICABLE) BUILDING OWNER AT OCCUPANCY

Site Address	Permit Number

✓☐ FAN WATT DRAW

Procedures for measuring the air handler watt draw are available in RACM, Appendix RE3.2.

✓ Method For Fan Watt Draw Measurement					
☐	RE3.2.1	Portable Watt Meter Measurement			
☐	RE3.2.2	Utility Revenue Meter Measurement			
		Measured Fan Watt Draw			Watts
		Measured Fan Flow (enter total cfm from airflow verification)			cfm
		Enter results of Watts/cfm			Watts/cfm
			✓	✓	
✓ ☐ Yes	☐ No	Measured fan watt/cfm draw is equal to or lower than the fan watt/cfm draw documented in CF-1R	☐	☐	
		Yes is a pass	Pass	Fail	

✓ ☐ ADEQUATE AIRFLOW VERIFICATION

Procedures for measuring the airflow are available in RACM, Appendix RE3.1.

✓ Method For Airflow Measurement					
☐	RE4.1.1	Diagnostic Fan Flow Using Flow Capture Hood			
☐	RE4.1.2	Diagnostic Fan Flow Using Plenum Pressure Matching			
☐	RE4.1.3	Diagnostic Fan Flow Using Flow Grid Measurement			
☐ Yes	☐ No	Duct design exists on plans			
		Measured Airflow:			Total cfm
		Rated Tons cfm/ton			cfm/ton
✓ ☐ Yes	☐ No	Measured airflow is greater than the criteria in Table RE-2	✓	✓	
		Yes is a pass	☐ Pass	☐ Fail	

✓ ☐ MAXIMUM COOLING CAPACITY

Procedures for determining maximum cooling load capacity are available in RACM, Appendix RF3.

1	✓	☐ Yes	☐ No	Adequate airflow verified (see adequate airflow credit)		
2	✓	☐ Yes	☐ No	Refrigerant charge or TXV		
3	✓	☐ Yes	☐ No	Duct leakage reduction credit verified		
4	✓	☐ Yes	☐ No	Cooling capacities of installed systems are ≤ to maximum cooling capacity indicated on the Performance's CF-1R and RF-3.		
5	✓	☐ Yes	☐ No	If the cooling capacities of installed systems are > than maximum cooling capacity in the CF-1R, then the electrical input for the installed systems must be ≤ to electrical input in the CF-1R.	✓ ☐	✓ ☐
				Yes to 1, 2, and 3; and Yes to either 4 or 5 is a pass	Pass	Fail

✓☐ HIGH EER AIR CONDITIONER

Procedures for verification are available in RACM, Appendix RI.

1	✓	☐ Yes	☐ No	EER values of installed systems match the CF-1R		
2	✓	☐ Yes	☐ No	For split system, indoor coil is matched to outdoor coil	✓	✓
3	✓	☐ Yes	☐ No	Time Delay Relay Verified (If Required)	☐	☐
				Yes to 1 and 2; and 3 (If Required) is a pass	Pass	Fail

Installing Subcontractor (Co. Name) OR General Contractor (Co. Name) OR Owner	
Signature:	Date:

Copies to: BUILDING DEPARTMENT, HERS RATER (IF APPLICABLE) BUILDING OWNER AT OCCUPANCY

Site Address	Permit Number

An installation certificate is required to be posted at the building site or made available for all appropriate inspections. (The information provided on this form is required) After completion of final inspection, a copy must be provided to the building department (upon request) and the building owner at occupancy, per Section 10-103(a).

BUILDING ENVELOPE LEAKAGE DIAGNOSTICS

✓ ☐ ENVELOPE SEALING INFILTRATION REDUCTION

Procedures for field verification and diagnostic testing of envelope leakage are available in RACM, Appendix RC.

Diagnostic Testing Results

	✓	✓	Building Envelope Leakage (CFM @ 50 Pa) as measured by Rater:		
1.	☐ Yes	☐ No	Measured envelope leakage less than or equal to the required level from CF-1R?		
2.	☐ Yes	☐ No	Is Mechanical Ventilation shown as required on the CF-1R?		
2a.	☐ Yes	☐ No	If Mechanical Ventilation is required on the CF-1R ('Yes' in line 2), has it been installed?		
2b.	☐ Yes	☐ No	Check this box 'yes' if mechanical ventilation is required ('Yes' in line 2) and ventilation fan watts are no greater than shown on CF-1R. Measured Watts =		
3.	☐ Yes	☐ No	Check this box "yes" if measured building infiltration (CFM @ 50 Pa) is greater than the CFM @ 50 values shown for an SLA of 1.5 on CF-1R (If this box is checked no, mechanical ventilation is required.)		
4.	☐ Yes	☐ No	Check this box "yes" if measured building infiltration (CFM @ 50 Pa) is less than the CFM @ 50 values shown for an SLA of 1.5 on CF-1R, mechanical ventilation is installed and house pressure is greater than minus 5 Pascal with all exhaust fans operating.		
			Pass if: a. Yes in line 1 and line 3, or b. Yes in line 1 and line2, 2a, and 2b, or c. Yes in line 1 and Yes in line 4. Otherwise fail.	✓ ☐ Pass	✓ ☐ Fail

✓ ☐ I, the undersigned, verify that the building envelope leakage meets the requirements claimed for building leakage reduction below default assumptions as used for compliance on the CF-1R. This is to certify that the above diagnostic test results and the work I performed associated with the test(s) is in conformance with the requirements for compliance credit. (The builder shall provide the HERS provider a copy of the CF-6R signed by the builder employees or subcontractors certifying that diagnostic testing and installation meet the requirements for compliance credit.)

Test Performed	
Installing Subcontractor (Co. Name) OR General Contractor (Co. Name) OR Owner	
Signature:	Date:

Copies to: BUILDING DEPARTMENT, HERS RATER (IF APPLICABLE), BUILDING OWNER AT OCCUPANCY

Site Address	Permit Number

Insulation Installation Quality Certificate

✓ ☐ Description of Insulation, (CF-6R, formerly IC-1) signed by the installer stating: insulation manufacturer's name, material identification, installed R-values, and for loose-fill insulation: minimum weight per square foot and minimum inches

✓ ☐ Installation meets all applicable requirements as specified in the High Quality Insulation Installation Procedures (ACM, Appendix RH)

✓ **FLOOR**			
☐ Yes	☐ No	☐ NA	All floor joist cavity insulation installed to uniformly fit the cavity side-to-side and end-to-end
☐ Yes	☐ No	☐ NA	Insulation in contact with the subfloor or rim joists insulated
☐ Yes	☐ No	☐ NA	Insulation properly supported to avoid gaps, voids, and compression
✓ **WALLS**			
☐ Yes	☐ No	☐ NA	*Wall stud cavities caulked or foamed to provide an air tight envelope*
☐ Yes	☐ No	☐ NA	Wall stud cavity insulation uniformly fills the cavity side-to-side, top-to-bottom, and front-to-back
☐ Yes	☐ No	☐ NA	No gaps
☐ Yes	☐ No	☐ NA	No voids over 3/4" deep or more than 10% of the batt surface area.
☐ Yes	☐ No	☐ NA	Hard to access wall stud cavities such as; corner channels, wall intersections, and behind tub/shower enclosures insulated to proper R-Value
☐ Yes	☐ No	☐ NA	Small spaces filled
☐ Yes	☐ No	☐ NA	Rim-joists insulated
☐ Yes	☐ No	☐ NA	Loose fill wall insulation meets or exceeds manufacturer's minimum weight-per-square-foot requirement
✓ **ROOF/CEILING PREPARATION**			
☐ Yes	☐ No	☐ NA	All draft stops in place to form a continuous ceiling and wall air barrier
☐ Yes	☐ No	☐ NA	All drops covered with hard covers
☐ Yes	☐ No	☐ NA	All draft stops and hard covers caulked or foamed to provide an air tight envelope
☐ Yes	☐ No	☐ NA	All recessed light fixtures IC and air tight (AT) rated and sealed with a gasket or caulk between the housing and the ceiling
☐ Yes	☐ No	☐ NA	Floor cavities on multiple-story buildings have air tight draft stops to all adjoining attics
☐ Yes	☐ No	☐ NA	Eave vents prepared for blown insulation - maintain net free-ventilation area
☐ Yes	☐ No	☐ NA	Knee walls insulated or prepared for blown insulation
☐ Yes	☐ No	☐ NA	Area under equipment platforms and cat-walks insulated or accessible for blown insulation
☐ Yes	☐ No	☐ NA	Attic rulers installed

Site Address	Permit Number

✓ **ROOF/CEILING BATTS**

☐ Yes	☐ No	☐ NA	No gaps
☐ Yes	☐ No	☐ NA	No voids over ¾ in. deep or more than 10% of the batt surface area.
☐ Yes	☐ No	☐ NA	Insulation in contact with the air-barrier
☐ Yes	☐ No	☐ NA	Recessed light fixtures covered
☐ Yes	☐ No	☐ NA	*Net free-ventilation area maintained at eave vents*
✓ **ROOF/CEILING LOOSE-FILL**			
☐ Yes	☐ No	☐ NA	Insulation uniformly covers the entire ceiling (or roof) area from the outside of all exterior walls.
☐ Yes	☐ No	☐ NA	Baffles installed at eaves vents or soffit vents - maintain net free-ventilation area of eave vent
☐ Yes	☐ No	☐ NA	Attic access insulated
☐ Yes	☐ No	☐ NA	Recessed light fixtures covered
☐ Yes	☐ No	☐ NA	Insulation at proper depth – insulation rulers visible and indicating proper depth and R-value
☐ Yes	☐ No	☐ NA	*Loose-fill insulation meets or exceeds manufacturer's minimum weight and thickness requirements for the target R-value. Target R-value _____. Manufacturer's minimum required weight for the target R-value _____ (pounds-per-square-foot). Manufacturer's minimum required thickness at time of installation _____. Manufacturer's minimum required settled thickness _____. Note: To receive compliance credit the HERS rater shall verify that the manufacturer's minimum weight and thickness has been achieved for the target R-value. (CF-6R only)*

DECLARATION

✓ ☐ I hereby certify that the installation meets all applicable requirements as specified in the Insulation Installation Procedures.

Installing Subcontractor (Co. Name) OR General Contractor (Co. Name) OR Owner	
Signature:	Date:

Copies to: BUILDING DEPARTMENT, HERS RATER (IF APPLICABLE), BUILDING OWNER AT OCCUPANCY

Site Address	Permit Number
County Subdivision	Lot Number

Description of Insulation (Formerly IC-1 Form)

1. RAISED FLOOR
   Material _____ Brand Name _____
   Thickness (inches) _____ Thermal Resistance (R-Value) _____

2. SLAB FLOOR/PERIMETER
   Material _____ Brand Name _____
   Thickness (inches) _____ Thermal Resistance (R-Value) _____
   Perimeter Insulation Depth (inches) _____

3. EXTERIOR WALL
   Frame Type _____
   A. Cavity Insulation
      Material _____ Brand Name _____
      Thickness (inches) _____ Thermal Resistance (R-Value) _____
   B . Exterior Foam Sheathing
      Material _____ Brand Name _____
      Thickness (inches) _____ Thermal Resistance (R-Value) _____

4. FOUNDATION WALL
   Material _____ Brand Name _____
   Thickness (inches) _____ Thermal Resistance (R-Value) _____

5. CEILING
   Batt or Blanket Type _____ Brand Name _____
   Thickness (inches) _____ Thermal Resistance (R-Value) _____
   Loose Fill Type _____ Brand _____
   Contractor's min installed weight/ft² _____lb Minimum thickness _____inches
   Manufacturer's installed weight per square foot to achieve Thermal Resistance (R-Value) _____

6. ROOF
   Material _____ Brand Name _____
   Thickness (inches) _____ Thermal Resistance (R-Value) _____

Declaration

✓ ☐ I hereby certify that the above insulation was installed in the building at the above location in conformance with the current *Energy Efficiency Standards* for residential buildings (Title 24, Part 6, California Code of Regulations) as indicated on the Certificate of Compliance, where applicable.

Item #s (if applicable)	Signature Date	Installing Subcontractor (Co. Name) OR General Contractor (Co. Name) OR Owner OR Window Distributor
Item #s (if applicable)	Signature Date	Installing Subcontractor (Co. Name) OR General Contractor (Co. Name) OR Owner OR Window Distributor
Item #s (if applicable)	Signature Date	Installing Subcontractor (Co. Name) OR General Contractor (Co. Name) OR Owner OR Window Distributor

Appendix B

APPLICABLE TABLES AND LANGUAGE FROM STANDARDS AND RACM

Standards Tables 116-A and 116-B

TABLE 116-A DEFAULT FENESTRATION PRODUCT U-FACTORS

FRAME TYPE[1]	PRODUCT TYPE	SINGLE-PANE U-FACTOR	DOUBLE-PANE U-FACTOR[2]
Metal	Operable	1.28	0.79
Metal	Fixed	1.19	0.71
Metal	Greenhouse/garden window	2.26	1.40
Metal	Doors	1.25	0.77
Metal	Skylight	1.98	1.3
Metal, Thermal Break	Operable	NA	0.66
Metal, Thermal Break	Fixed	NA	0.55
Metal, Thermal Break	Greenhouse/garden window	NA	1.12
Metal, Thermal Break	Doors	NA	0.59
Metal, Thermal Break	Skylight	NA	1.11
Nonmetal	Operable	0.99	0.58
Nonmetal	Fixed	1.04	0.55
Nonmetal	Doors	0.99	0.53
Nonmetal	Greenhouse/garden windows	1.94	1.06
Nonmetal	Skylight	1.47	0.84

[1] Metal includes any field-fabricated product with metal cladding. Nonmetal-framed manufactured fenestration products with metal cladding must add 0.04 to the listed U-factor. Nonmetal-frame types can include metal fasteners, hardware, and door thresholds. Thermal break product design characteristics are:

a. The material used as the thermal break must have a thermal conductivity of not more than 3.6 Btu-inch/hr/ft^2/°F,

b. The thermal break must produce a gap of not less than 0.210 inch, and

c. All metal members of the fenestration product exposed to interior and exterior air must incorporate a thermal break meeting the criteria in Items a. and b. above.

In addition, the fenestration product must be clearly labeled by the manufacturer that it qualifies as a thermally broken product in accordance with this standard. Thermal break values shall not apply to field-fabricated fenestration products.

[2] For all dual-glazed fenestration products, adjust the listed U-factors as follows:

a. Subtract 0.05 for spacers of 7/16 inch or wider.

b. Subtract 0.05 for products certified by the manufacturer as low-E glazing.

c. Add 0.05 for products with dividers between panes if spacer is less than 7/16 inch wide.

d. Add 0.05 to any product with true divided lite (dividers through the panes).

TABLE 116-B DEFAULT SOLAR HEAT GAIN COEFFICIENT

FRAME TYPE	PRODUCT	GLAZING	TOTAL WINDOW SHGC[2]	
			Single-Pane	Double-Pane
Metal	Operable	Clear	0.80	0.70
Metal	Fixed	Clear	0.83	0.73
Metal	Operable	Tinted	0.67	0.59
Metal	Fixed	Tinted	0.68	0.60
Metal, Thermal Break	Operable	Clear	NA	0.63
Metal, Thermal Break	Fixed	Clear	NA	0.69
Metal, Thermal Break	Operable	Tinted	NA	0.53
Metal, Thermal Break	Fixed	Tinted	NA	0.57
Nonmetal	Operable	Clear	0.74	0.65
Nonmetal	Fixed	Clear	0.76	0.67
Nonmetal	Operable	Tinted	0.60	0.53
Nonmetal	Fixed	Tinted	0.63	0.55

[2] SHGC = Solar Heat Gain Coefficient.

(d) **Installation of Insulation in Existing Buildings**. Insulation installed in an existing attic, or on an existing duct or water heater, shall comply with the applicable requirements of this subsection. If a contractor installs the insulation, the contractor shall certify to the customer, in writing, that the insulation meets the applicable requirements of this subsection.

1. **Attics**. If insulation is installed in the existing attic of a low-rise residential building, the R-value of the total amount of insulation (after addition of insulation to the amount, if any, already in the attic) shall be at least R-38 in climate zones 1 and 16; and R-30 in all other climate zones.

   EXCEPTION to Section 118 (d) 1: Where the accessible space in the attic is not large enough to accommodate the required R-value, the entire accessible space shall be filled with insulation provided such installation does not violate Section 1505.3 of Title 24, Part 2.

2. **Water heaters**. If external insulation is installed on an existing unfired water storage tank or on an existing back-up tank for a solar water-heating system, it shall have an R-value of at least R-12, or the heat loss of the tank surface based on an 80°F water-air temperature difference shall be less than 6.5 Btu per hour per square foot.

3. **Ducts**. If insulation is installed on an existing space-conditioning duct, it shall comply with Section 605 of the CMC.

(e) **Placement of roof/ceiling insulation.** Insulation installed to limit heat loss and gain through the top of conditioned spaces shall comply with the following:

1. Insulation shall be installed in direct contact with a continuous roof or ceiling which is sealed to limit infiltration and exfiltration as specified in Section 117, including but not limited to placing insulation either above or below the roof deck or on top of a drywall ceiling; and

2. Insulation placed on top of a suspended ceiling with removable ceiling panels shall be deemed to have no affect on envelope heat loss; and

   EXCEPTION to Section 118(e) 3: When there are conditioned spaces with a combined floor area no greater than 2,000 square feet in an otherwise unconditioned building, and when the average height of the space between the ceiling and the roof over these spaces is greater than 12 feet, insulation placed in direct contact with a suspended ceiling with removable ceiling panels shall be an acceptable method of reducing heat loss from a conditioned space and shall be accounted for in heat loss calculations.

3. Insulation shall be installed below the roofing membrane or layer used to seal the roof from water penetration unless the insulation has a maximum water absorption of 0.3 percent by volume when tested according to ASTM Standard C 272.

Any new construction in a low-rise residential building shall meet the requirements of this Section.

(a) **Ceiling Insulation**. The opaque portions of ceilings separating conditioned spaces from unconditioned spaces or ambient air shall meet the requirements of either Item 1 or 2 below:

1. Ceilings shall be insulated between wood-framing members with insulation resulting in an installed thermal resistance of R-19 or greater for the insulation alone.

   ALTERNATIVE to Section 150 (a) 1: Insulation which is not penetrated by framing members may meet an R-value equivalent to installing R-19 insulation between wood-framing members and accounting for the thermal effects of framing members.

2. The weighted average U-factor of ceilings shall not exceed the U-factor that would result from installing R-19 insulation between wood-framing members in the entire ceiling and accounting for the effects of framing members.

(b) **Loose-fill Insulation**. When loose-fill insulation is installed, the minimum installed weight per square foot shall conform with the insulation manufacturer's installed design weight per square foot at the manufacturer's labeled R-value.

STANDARDS TABLE 151-B ALTERNATIVE COMPONENT PACKAGE C

Climate Zone	1, 16	3	4	5	6	7	8, 9	10	2, 11-13	14	15
BUILDING ENVELOPE											
Insulation minimums[1]											
Ceiling	R49	R38	R38	R38	R38	R38	R38	R49	R49	R49	R49
Wood-frame walls	R29	R25	R25	R25	R21	R21	R21	R25	R29	R29	R29
"Heavy mass" walls	NA	NA	NA	NA	NA	NA	NA	NA	NA	NA	NA
"Light mass" walls	NA	NA	NA	NA	NA	NA	NA	NA	NA	NA	NA
Below-grade walls	NA	NA	NA	NA	NA	NA	NA	NA	NA	NA	NA
Slab floor perimeter	R7	R7	R7	R7	R7	R7	R7	R7	R7	R7	R7
Raised floors	R30	R30	R30	R30	R21	R21	R21	R30	R30	R30	R21
Concrete raised floors	NA	NA	NA	NA	NA	NA	NA	NA	NA	NA	NA
Radiant Barrier	NR	NR	REQ	NR	NR	NR	REQ	REQ	REQ	REQ	REQ
FENESTRATION											
Maximum U-factor[2]	0.42	0.42	0.38	0.42	0.42	0.38	0.38	0.38	0.38	0.38	0.38
Maximum Solar Heat Gain Coefficient (SHGC)[3]	NR	NR	0.40	NR	NR	0.40	0.40	0.40	0.40	0.40	0.40
Maximum total area	14%	14%	14%	16%	14%	14%	14%	16%	16%	14%	16%
Maximum West facing area	NR	NR	5%	NR	NR	5%	5%	5%	5%	5%	5%
THERMAL MASS[4]	REQ	REQ	REQ	REQ	REQ	REQ	REQ	REQ	REQ	REQ	REQ
SPACE-HEATING [5]											
Electric-resistant allowed	Yes	Yes	Yes	Yes	Yes	Yes	Yes	Yes	Yes	Yes	Yes
If gas, AFUE =	MIN	MIN	MIN	MIN	MIN	MIN	MIN	MIN	MIN	MIN	MIN
If heat pump, HSPF[6] =	MIN	MIN	MIN	MIN	MIN	MIN	MIN	MIN	MIN	MIN	MIN
SPACE-COOLING											
SEER =	MIN	MIN	MIN	MIN	MIN	MIN	MIN	MIN	MIN	MIN	MIN
If split system, Refrigerant charge measurement or thermostatic expansion valve	NR	NR	NR	NR	NR	NR	REQ	REQ	REQ	REQ	REQ
DUCTS											
Duct sealing	REQ	REQ	REQ	REQ	REQ	REQ	REQ	REQ	REQ	REQ	REQ
Duct Insulation	R-8	R-8	R-8	R-8	R-8	R-8	R-8	R-8	R-8	R-8	R-8
WATER-HEATING	System shall meet Section 151 (f) 8 or Section 151 b										

STANDARDS TABLE 151-C ALTERNATIVE COMPONENT PACKAGE D

Climate Zone	1	2	3	4	5	6	7	8	9	10	11	12	13	14	15	16
BUILDING ENVELOPE																
Insulation minimums[1]																
Ceiling	R38	R30	R30	R30	R30	R30	R30	R30	R30	R30	R38	R38	R38	R38	R38	R38
Wood-frame walls	R21	R13	R13	R13	R13	R13	R13	R13	R13	R13	R19	R19	R19	R21	R21	R21
"Heavy mass" walls	(R4.76)	(R2.44)	(R2.44)	(R2.44)	(R2.44)	(R2.44)	(R2.44)	(R2.44)	(R2.44)	(R2.44)	(R4.76)	(R4.76)	(R4.76)	(R4.76)	(R4.76)	(R4.76)
"Light mass" walls	NA	NA	NA	NA	NA	NA	NA	NA	NA	NA	NA	NA	NA	NA	NA	NA
Below-grade walls	R0	R0	R0	R0	R0	R0	R0	R0	R0	R0	R0	R0	R0	R0	R0	R13
Slab floor perimeter	NR	NR	NR	NR	NR	NR	NR	NR	NR	NR	NR	NR	NR	NR	NR	R7
Raised floors	R19	R19	R19	R19	R19	R19	R19	R19	R19	R19	R19	R19	R19	R19	R19	R19
Concrete raised floors	R8	R8	R0	R0	R0	R0	R0	R0	R0	R0	R8	R4	R8	R8	R4	R8
Radiant Barrier	NR	REQ	NR	REQ	NR	NR	NR	REQ	REQ	REQ	REQ	REQ	REQ	REQ	REQ	NR
FENESTRATION																
Maximum U-factor[2]	0.57	0.57	0.67	0.67	0.67	0.67	0.67	0.67	0.67	0.57	0.57	0.57	0.57	0.57	0.57	0.55
Maximum Solar Heat Gain Coefficient (SHGC)[3]	NR	0.40	NR	0.40	NR	NR	0.40	0.40	0.40	0.40	0.40	0.40	0.40	0.40	0.40	NR
Maximum total area	20%	20%	20%	20%	20%	20%	20%	20%	20%	20%	20%	20%	20%	20%	20%	20%
Maximum West facing area	NR	5%	NR	5%	NR	NR	5%	5%	5%	5%	5%	5%	5%	5%	5%	NR
THERMAL MASS[4]	NR	NR	NR	NR	NR	NR	NR	NR	NR	NR	NR	NR	NR	NR	NR	NR
SPACE-HEATING [5]																
Electric-resistant allowed	No	No	No	No	No	No	No	No	No	No	No	No	No	No	No	No
If gas, AFUE =	MIN	MIN	MIN	MIN	MIN	MIN	MIN	MIN	MIN	MIN	MIN	MIN	MIN	MIN	MIN	MIN
If heat pump, HSPF[6] =	MIN	MIN	MIN	MIN	MIN	MIN	MIN	MIN	MIN	MIN	MIN	MIN	MIN	MIN	MIN	MIN
SPACE-COOLING																
SEER =	MIN	MIN	MIN	MIN	MIN	MIN	MIN	MIN	MIN	MIN	MIN	MIN	MIN	MIN	MIN	MIN
If split system,	NR	REQ[9]	NR	NR	NR	NR	NR	REQ[9]	REQ[9]	REQ[12]	REQ[12]	REQ[12]	REQ[13]	REQ[14]	REQ	NR
Refrigerant charge measurement or Thermostatic Expansion valve																
DUCTS																
Duct sealing	REQ[8]	REQ[9]	REQ[10]	REQ[11]	REQ[10]	REQ[10]	REQ[10]	REQ[9]	REQ[9]	REQ[12]	REQ[12]	REQ[12]	REQ[13]	REQ[14]	REQ	REQ[8]
Duct Insulation	R-6	R-6	R-6	R-6	R-6	R-4.2	R-4.2	R-4.2	R-6	R-6	R-6	R-6	R-6	R-8	R-8	R-8
WATER-HEATING	System shall meet Section 151 (f) 8 or Section 151 b															

Notes to Standards Tables 151-B and 151-C

1. The R-values shown for ceiling, wood frame wall and raised floor are for wood-frame construction with insulation installed between the framing members. For alternative construction assemblies, see Section 151 (f) 1 A. The heavy mass wall R-value in parentheses is the minimum R-value for the entire wall assembly if the wall weight exceeds 40 pounds per square foot. The light mass wall R-value in brackets is the minimum R-value for the entire assembly if the heat capacity of the wall meets or exceeds the result of multiplying the bracketed minimum R-value by 0.65. Any insulation installed on heavy or light mass walls must be integral with, or installed on the outside of, the exterior mass. The inside surface of the thermal mass, including plaster or gypsum board in direct contact with the masonry wall, shall be exposed to the room air. The exterior wall used to meet the R-value in parentheses cannot also be used to meet the thermal mass requirement.
2. The installed fenestration products shall meet the requirements of §151 (f) 3 and §151 (f) 4
3. The installed fenestration products shall meet the requirements of Section 151 (f) 4.
4. If the package requires thermal mass, the thermal mass shall meet the requirements of Section 151 (f) 5.
5. Automatic setback thermostats shall be installed in conjunction with all space-heating systems in accordance with Section 151 (f) 9.
6. HSPF means "heating seasonal performance factor."
7. Electric-resistance water heating may be installed as the main water heating source in Package C only if the water heater is located within the building envelope and a minimum of 25 percent of the energy for water heating is provided by a passive or active solar system or a wood stove boiler. A wood stove boiler credit shall not be used in Climate Zones 8, 10, and 15, nor in localities that do not allow wood stoves.
8. As an alternative under Package D in climate zones 1 and 16, glazing with a maximum 0.42 U-factor and a 90% AFUE furnace or a 7.6 HSPF heat pump may be substituted for duct sealing. All other requirements of Package D must be met.
9. As an alternative under Package D in climate zones 2, 8, and 9, glazing with a maximum 0.38 U-factor and maximum 0.31 SHGC may be substituted for duct sealing and either refrigerant charge measurement or a thermostatic expansion valve. All other requirements of Package D must be met.
10. As an alternative under Package D in climate zones 3, 5, 6 and 7, glazing with a maximum 0.42 U-factor may be substituted for duct sealing. All other requirements of Package D must be met.
11. As an alternative under Package D in climate zone 4, glazing with a maximum 0.38 U-factor and maximum 0.36 Solar Heat Gain Coefficient may be substituted for duct sealing. All other requirements of Package D must be met.
12. As an alternative under Package D in climate zones 10, 11, and 12, glazing with a maximum 0.38 U-factor and maximum 0.31 Solar Heat Gain Coefficient, and a minimum 13.0 SEER space cooling system may be substituted for duct sealing and either refrigerant charge measurement or a thermostatic expansion valve. All other requirements of Package D must be met.
13. As an alternative under Package D in climate zone 13, glazing with a maximum 0.38 U-factor and maximum 0.31 Solar Heat Gain Coefficient, and a minimum 15.0 SEER space cooling system may be substituted for duct sealing and either refrigerant charge measurement or a thermostatic expansion valve. All other requirements of Package D must be met.
14. As an alternative under Package D in climate zone 14, glazing with a maximum 0.38 U-factor and maximum 0.31 Solar Heat Gain Coefficient, and a minimum 16.0 SEER space cooling system may be substituted for duct sealing and either refrigerant charge measurement or a thermostatic expansion valve. All other requirements of Package D must be met.

(a) **Additions**. Additions to existing residential buildings shall meet the requirements of Sections 111 through 118, Section 119 (d), and Section 150, and either Section 152 (a) 1 or 2.

1. **Prescriptive approach**. Additions to existing buildings shall meet the following additional requirements:

   A. Fenestration in additions up to 100 square feet shall not have more than 50 square feet of fenestration area, and shall meet the U-factor and Solar Heat Gain Coefficient requirements of Package D (Sections 151 (f) 3 A, 151 (f) 4 and **STANDARDS TABLE 151-C**); or

   B. Additions up to 1000 square feet shall meet all the requirements of Package D [Section 151(f) and **STANDARDS TABLE 151-C**], except that the addition's total glazing area limit is the maximum allowed in Package D plus the glazing area that was removed by the addition, and the wall insulation value need not exceed R-13.

   C. Additions of more than 1000 square feet shall meet all the requirements of Package D [Section 151(f) and **STANDARDS TABLE 151-C** .

2. **Performance approach**. Performance calculations shall meet the requirements of Section 151 (a) through (e), pursuant to either Item A or B, below.

   A. The addition complies if the addition alone meets the combined water-heating and space-conditioning energy budgets.

   B. The addition complies if the energy efficiency of the existing building is improved such that the TDV energy consumption of the improved existing building and the addition is equal to or less than that of the unimproved existing building plus an addition that complies with the applicable energy budget. When an improvement is proposed to the existing building to comply with this subsection, the improvement shall meet the requirements of Section 152 (b) 2 for that component.

EXCEPTION 1 to Section 152 (a): Existing structures with R-11 framed walls showing compliance with Section 152 (a) 2 (Performance Approach) are exempt from Section 150 (c).

EXCEPTION 2 to Section 152 (a): Any dual-glazed greenhouse window and dual-glazed skylight installed in an addition complies with the U-factor requirements in Section 151 (f) 3 A.

EXCEPTION 3 to Section 152 (a): If the addition will increase the total number of water heaters in the building, one of the following types of water heaters may be installed to comply with Section 152 (a) 1 or Section 152 (a) 2 A:

1. A gas storage nonrecirculating water-heating system that does not exceed 50 gallons capacity; or

2. If no natural gas is connected to the building, an electric storage water heater that does not exceed 50 gallons capacity, and has an energy factor not less than 0.90; or

3. A water-heating system determined by the executive director to use no more energy than the one specified in Item 1 above; or if no natural gas is connected to the building, a water-heating system determined by the executive director to use no more energy than the one specified in Item 2 above.

For prescriptive compliance with Section 152 (a) 1, the water-heating systems requirement in Section 151 (f) 8 shall not apply. For performance compliance for the addition alone, only the space-conditioning budgets of Section 151 (b) 2 shall be used; the water-heating budgets of Section 151 (b) 1 shall not apply.

The performance approach for the existing building and the addition in Section 152 (a) 2 B may be used to show compliance, regardless of the type of water heater installed.

EXCEPTION 4 to Section 152 (a): When heating and/or cooling will be extended to an addition from the existing system(s), the existing heating and cooling equipment need not comply with Title 24, Part 6. The heating system capacity must be adequate to meet the minimum requirements of CBC Section 310.11.

EXCEPTION 5 to Section 152 (a): When ducts will be extended from an existing duct system to serve the addition, the ducts shall meet the requirements of Section 152 (b) 1 D.

(b) **Alterations**. Alterations to existing residential buildings or alterations in conjunction with a change in building occupancy to a low-rise residential occupancy shall meet either Item 1 or 2 below.

1. **Prescriptive approach.** The altered component and any newly installed equipment serving the alteration shall meet the applicable requirements of Sections 110 through 118, Section 119 (d), and Section 150; and

   A. Alterations that add fenestration area shall meet the U-factor requirements of Package D [Section 151 (f) 3 A and **STANDARDS TABLE 151-C** , the total fenestration area requirements of Package D [Section 151 (f) 3 B and **STANDARDS TABLE 151-C**], and the Solar Heat Gain coefficient requirements of Package D [Section 151 (f) 4 and **STANDARDS TABLE 151-C**

      EXCEPTION to Section 152(b) 1 A.: Alterations that add fenestration area of up to 50 square feet shall not be required to meet the total fenestration area requirements of Section 151 (f) 3. B.

   B. Replacement fenestration, where all the glazing in an existing fenestration opening is replaced with a new manufactured fenestration product, shall not exceed the U-factor and Solar Heat Gain Coefficient requirements of Package D [Sections 151 (f) 3 A and 151 (f) 4 and **STANDARDS TABLE 151-C**].

      NOTE: Glass replaced in an existing sash and frame, or replacement of a single sash in a multi-sash fenestration product are considered repairs.

C. New space-conditioning systems or components other than new or replacement space conditioning ducts shall:

   i. Meet the requirements of Section s150 (h), 150 (i), 150 (j) 2, 151 (f) 7, and 151 (f) 9; and

   ii. Be limited to natural gas, liquefied petroleum gas, or the existing fuel type unless it can be demonstrated that the TDV energy use of the new system is more efficient than the existing system.

D. When more than 40 feet of new or replacement space-conditioning ducts are installed in unconditioned space, the new ducts shall meet the requirements of Section 150 (m) and the duct insulation requirements of Package D Section 151 (f) 10, and if in climate zones 2, 9, 10, 11, 12, 13, 14, 15, or 16, the duct system shall be sealed as confirmed through field verification and diagnostic testing in accordance with procedures for duct sealing of existing duct systems as specified in the Residential ACM manual, to meet one of the following requirements:

   i. If the new ducts form an entirely new duct system directly connected to the air handler, the measured duct leakage shall be less than 6% of fan flow; or

   ii. If the new ducts are an extension of an existing duct system, the combined new and existing duct system shall meet one of the following requirements:

      a. The measured duct leakage shall be less than 15% of fan flow; or

      b. The measured duct leakage to outside shall be less than 10% of fan flow; or

      c. The duct leakage shall be reduced by more than 60% relative to the leakage prior to the installation of the new ducts and a visual inspection including a smoke test shall demonstrate that all accessible leaks have been sealed or

      d. If it is not possible to meet the duct sealing requirements of Subsection a, b, or c, all accessible leaks shall be sealed and verified through a visual inspection and a smoke test by a certified HERS rater.

      EXCEPTION to Section 152 (b) 1 D ii: Existing duct systems that are extended, which are constructed, insulated or sealed with asbestos.

E. In climate zones 2, 9, 10, 11, 12, 13, 14, 15, and 16, when a space-conditioning system is altered by the installation or replacement of space-conditioning equipment (including replacement of the air handler, outdoor condensing unit of a split system air conditioner or heat pump, cooling or heating coil, or the furnace heat exchanger) the duct system that is connected to the new or replacement space-conditioning equipment shall be sealed, as confirmed through field verification and diagnostic testing in accordance with procedures for duct sealing of existing duct systems as specified in the Residential ACM manual, to one of the following requirements.
   i. The measured duct leakage shall be less than 15% of fan flow; or

ii. The measured duct leakage to outside shall be less than 10% of fan flow; or

iii. The measured duct leakage shall be reduced by more than 60% relative to the measured leakage prior to the installation or replacement of the space conditioning equipment and a visual inspection including a smoke test shall demonstrate that all accessible leaks have been sealed; or

iv. If it is not possible to meet the duct requirements of i, ii, or iii, all accessible leaks shall be sealed and verified through a visual inspection and a smoke test by a certified HERS rater.

EXCEPTION 1 to Section 152 (b) 1 E: Duct systems that are documented to have been previously sealed as confirmed through field verification and diagnostic testing in accordance with procedures in the Residential ACM manual.

EXCEPTION 2 to Section 152 (b) 1 E: Duct systems with less than 40 linear feet in unconditioned spaces.

EXCEPTION 3 to Section 152 (b) 1 E: Existing duct systems constructed, insulated or sealed with asbestos.

F. New service water-heating systems or components shall:

i. Meet the requirements of Section 150; and

ii. Be limited to natural gas, liquefied petroleum gas, or the existing fuel type unless it can be demonstrated that the TDV energy use of the new system is more efficient than the existing system.

2. **Performance approach.**

A. The altered components shall meet the applicable requirements of Sections 110 through 118, Section 119 (d), and Section 150; and

B. The energy efficiency of the existing building shall be improved so that the building meets the energy budget in Section 151 that would apply if the existing building was unchanged except that those altered components that do not meet the requirements of Section 152 (b) 1 (including improvements proposed to comply with this section) are assumed to be upgraded to comply with Section 152 (b) 1 as specified in the Residential ACM Manual.

EXCEPTION 1 to Section 152 (b): The EXCEPTION to Section 150 (k) 2 applies only for alterations to kitchen lighting where all permanently installed kitchen luminaires are replaced.

EXCEPTION 2 to Section 152 (b): Any dual-glazed greenhouse window and dual-glazed skylight installed as part of an alteration complies with the U-factor requirements in Section 151 (f) 3 A.

TABLE R3-11 – DEFAULT ASSUMPTIONS FOR EXISTING BUILDINGS – VINTAGE TABLE VALUES

	Default Assumptions for Year Built (Vintage)							
Conservation Measure	Before 1978	1978 to 1983	1984 to 1991	1992 to 1998	1999 - 2000	2001-2003	2004-2005	2006 and Later
INSULATION U-FACTOR								
Roof	0.079	0.049	0.049	0.049	0.049	0.049	0.049	0.049
Wall	0.356	0.110	0.110	0.102	0.102	0.102	0.102	0.102
Raised Floor –CrawlSp	0.099	0.099	0.099	0.046	0.046	0.046	0.046	0.046
Raised Floor-No CrawlSp	0.238	0.238	0.238	0.064	0.064	0.064	0.064	0.064
Slab Edge F-factor =	0.73	0.73	0.73	0.73	0.73	0.73	0.73	0.73
Ducts	R-2.1	R-2.1	R-2.1	R-4.2	R-4.2	R-4.2	R-4.2	R-4.2
LEAKAGE								
Building (SLA)	4.9	4.9	4.9	4.9	4.9	4.9	4.9	4.9
Duct Leakage Factor (See Table 4-13)	0.86	0.86	0.86	0.86	0.86	0.89	0.89	0.89
FENESTRATION								
U-factor	Use Table 116-A - Title 24, Part 6, Section 116 for all Vintages							
SHGC	Use Table 116-B - Title 24, Part 6, Section 116 for all Vintages							
Shading Dev.	Use Table R3-7 for all Vintages							
SPACE HEATING EFFICIENCY								
Gas Furnace (Central) AFUE	0.75	0.78	0.78	0.78	0.78	0.78	0.78	0.78
Gas Heater (Room) AFUE	0.65	0.65	0.65	0.65	0.65	0.65	0.65	0.65
Heat Pump HSPF	5.6	5.6	6.6	6.6	6.8	6.8	6.8	7.4
Electric Resistance HSPF	3.413	3.413	3.413	3.413	3.413	3.413	3.413	3.413
SPACE COOLING EFFICIENCY								
All Types, SEER	8.0	8.0	8.9	9.7	9.7	9.7	9.7	12.0
WATER HEATING								
Energy Factor	0.525	0.525	0.525	0.525	0.58	0.58	0.575	0.575
Rated Input, MBH	28.0	28.0	28.0	28.0	28.0	28.0	28.0	28.0

Table F-3 Standards for Large Water Heaters

Table F-3
Standards for Large Water Heaters
(New Standards Effective October 29, 2003)

Appliance	*Category*	*Size or Rating*	*Minimum Thermal Efficiency (%)*	*Maximum Standby Loss*[1,2]
Gas storage water heaters	< 4,000 Btu/hr/gal	≤ 155,000 Btu/hr	80	Q/800 + 110√V Btu/hr
		> 155,000 Btu/hr	80	Q/800 + 110√V Btu/hr
Gas instantaneous water heaters	≥ 4,000 Btu/hr/gal	≥ 10 gal	80	Q/800 + 110√V Btu/hr
Oil storage water heaters	< 4,000 Btu/hr/gal	≤ 155,000 Btu/hr	78	Q/800 + 110√V Btu/hr
		> 155,000 Btu/hr	78	Q/800 + 110√V Btu/hr
Oil instantaneous water heaters	≥ 4,000 Btu/hr/gal	< 10 gal	80	–
		≥ 10 gal	78	Q/800 + 110√V Btu/hr
Gas hot water supply boilers	≥ 4,000 Btu/hr/gal	≥ 10 gal	80	Q/800 + 110√V Btu/hr
Oil hot water supply boilers	≥ 4,000 Btu/hr/gal	≥ 10 gal	78	Q/800 + 110√V Btu/hr
Electric water heaters	All	All	No requirement	0.30 + 27/V % Per hour

[1] Standby loss is based on a 70° F temperature difference between stored water and ambient requirements. In the standby loss equations, V is the rated volume in gallons, and Q is the nameplate input rate in Btu/hr.

[2] Water heaters and hot water supply boilers having more than 140 gallons of storage capacity are not required to meet the standby loss requirement if the tank surface is thermally insulated to R-12.5, if a standing pilot light is not installed, and for gas- or oil-fired storage water heaters, there is a flue damper or fan-assisted combustion.

Table F-4
Standards for Large Water Heaters
(Existing Standards Remaining in Effect On and After October 29, 2003)

Fuel	*Input Rating*	*Volume (gallons)*	*Input to Volume Ratio (Btu/gal)*	*Minimum Thermal Efficiency (%)*	*Maximum Standby Loss (%/hour)*[1,2]
Gas	> 200,000 (Btu/hour)	< 10	≥ 4,000	80	Not applicable
Electric	> 12 kW	≤ 140	< 4,000	Not applicable	0.3 + 27/V
Electric	> 12 kW	> 140	< 4,000	Not applicable	0.3 + 27/V
Electric	> 12 kW	< 10	≥ 4,000	80	Not applicable
Electric	> 12 kW	≥ 10	≥ 4,000	77	2.3 + 67/V

[1] Volume (V) = measured storage volume in gallons

[2] Storage-type water heaters with volume exceeding 140 gallons need not meet the standby loss requirement if they are thermally insulated to at least R-12.5 and a standing pilot light is not used.

Appendix C

NATURAL GAS APPLIANCE TESTING (NGAT) STANDARDS

The NGAT standards, "Natural Gas Appliance Testing (NGAT) Standards", are found in Section 29 of the "California Conventional Home Weatherization Installation Standards" manual (WIS); edition dated January 1, 2004. A copy may be obtained from contacting:

James E. O'Bannon

Richard Heath and Associates

1026 Mangrove Avenue, Suite 20

Chico, CA 95926

Phone: (530) 898-1323

Fax: (530) 898-1325

email: jim@rhainc.com

Appendix D

Eligibility Criteria for Radiant Barriers

Radiant barriers shall meet specific eligibility and installation criteria to be modeled by any ACM and receive energy credit for compliance with the energy efficiency standards for low-rise residential buildings.

- The emittance of the radiant barrier shall be less than or equal to 0.05 as tested in accordance with ASTM C-1371 or ASTM E-408.
- Installation shall conform to ASTM C-1158 [Standard Practice For Use and Installation Of Radiant Barrier Systems (RBS) In Building Construction.], ASTM C-727 (Standard Practice For Installation and Use Of Reflective Insulation In Building Constructions.), ASTM C-1313 (Standard Specification for Sheet Radiant Barriers for Building Construction Applications), and ASTM C-1224 (Standard Specification for Reflective Insulation for Building Applications). The radiant barrier shall be securely installed in a permanent manner with the shiny side facing down toward the interior of the building (ceiling or attic floor). Moreover, radiant barriers shall be installed at the top chords of the roof truss/rafters in ***any*** of the following methods:
    1. Draped over the truss/rafter (the top chords) before the upper roof decking is installed.
    2. Spanning between the truss/rafters (top chords) and secured (stapled) to each side.
    3. Secured (stapled) to the bottom surface of the truss/rafter (top chord). A minimum air space shall be maintained between the top surface of the radiant barrier and roof decking of not less than 1.5 inches at the center of the truss/rafter span.
    4. Attached [laminated] directly to the underside of the roof decking. The radiant barrier shall be laminated and perforated by the manufacturer to allow moisture/vapor transfer through the roof deck.

    In addition, the radiant barrier shall be installed to cover all gable end walls and other vertical surfaces in the attic.
- The attic shall be ventilated to:
    1. Conform to the radiant barrier manufacturer's instructions.
    2. Provide a minimum free ventilation area of not less than one square foot of vent area for each 150 square feet of attic floor area.
    3. Provide no less than 30 percent upper vents.

Ridge vents or gable end vents are recommended to achieve the best performance. The material should be cut to allow for full airflow to the venting.

- The radiant barrier (except for radiant barriers laminated directly to the roof deck) shall be installed to have a minimum gap of 3.5 inches between the bottom of the radiant barrier and the top of the ceiling insulation to allow ventilation air to flow between the roof decking and the top surface of the radiant barrier, and have a minimum of six (6) inches (measured horizontally) left at the roof peak to allow hot air to escape from the air space between the roof decking and the top surface of the radiant barrier.
- When installed in enclosed rafter spaces where ceilings are applied directly to the underside of roof rafters, a minimum air space of 1 inch shall be provided between the radiant barrier and the top of the ceiling insulation, and ventilation shall be provided for every rafter space. Vents shall be provided at both the upper and lower ends of the enclosed rafter space.
- The product shall meet all requirements for California certified insulation materials (radiant barriers) of the Department of Consumer Affairs, Bureau of Home Furnishings and Thermal Insulation, as specified by CCR, Title 24, Part 12, Chapter 12-13, Standards for Insulating Material.
- The use of a radiant barrier shall be listed in the *Special Features and Modeling Assumptions* listings of the CF-1R and described in detail in the ACM Compliance Supplement.