Arnold Schwarzenegger
*Governor*

# CALIFORNIA ENVIRONMENTAL SENSING AND COMMUNICATIONS

PIER PROJECT REPORT

*Prepared For:*
**California Energy Commission**
Public Interest Energy Research Program

*Prepared By:*
**Scripps Institution of Oceanography**

February 2005
CEC-500-2005-050

**California Climate Change Center**
**Report Series Number 2005-013**

***Prepared By:***
Dan Cayan
Scripps Institution of Oceanography
La Jolla, California
Contract No. 500-02-004
Work Authorization MR-002

***Prepared For:***
California Energy Commission
Public Interest Energy Research (PIER) Program

Guido Franco,
***Contract Manager***

Kelly Birkinshaw,
***Program Area Team Lead***

Ron Kukulka,
***Acting Deputy Director***
**ENERGY RESEARCH AND DEVELOPMENT DIVISION**

Robert L. Therkelsen
***Executive Director***

**DISCLAIMER**

This report was prepared as the result of work sponsored by the California Energy Commission. It does not necessarily represent the views of the Energy Commission, its employees or the State of California. The Energy Commission, the State of California, its employees, contractors and subcontractors make no warrant, express or implied, and assume no legal liability for the information in this report; nor does any party represent that the uses of this information will not infringe upon privately owned rights. This report has not been approved or disapproved by the California Energy Commission nor has the California Energy Commission passed upon the accuracy or adequacy of the information in this report.

# Acknowledgements

Funding for this research was provided by the California Energy Commission's Public Interest Energy Research (PIER) program. Additional funding during portions of this project was provided by the California Institute for Telecommunications and Information Technology (Cal-(IT)$^2$), the National Oceanic and Atmospheric Administration (NOAA) Office of Global Programs, the National Science Foundation (NSF) ROADNet Information Technology Research Project and the Canon National Parks Foundation, and PIER. The PIER funding was invaluable for designing, building, and field testing the DL1-Met. Along with the other funding sources, the PIER Environmental Sensing and Communications funding has provided for the engineering and technical support and the hardware necessary for designing the logger; building a set of 10-meter meteorological towers and installing the logger, attendant instruments, and transmitting antenna; field testing; and developing the database and Web interface.

Please cite this report as follows:

Cayan, Dan. 2005. *California Environmental Sensing and Communications.* Scripps Institution of Oceanography for the California Energy Commission, PIER Energy-Related Environmental Research. CEC-500-2005-050.

# Preface

The Public Interest Energy Research (PIER) Program supports public interest energy research and development that will help improve the quality of life in California by bringing environmentally safe, affordable, and reliable energy services and products to the marketplace.

The PIER Program, managed by the California Energy Commission (Energy Commission), annually awards up to $62 million to conduct the most promising public interest energy research by partnering with Research, Development, and Demonstration (RD&D) organizations, including individuals, businesses, utilities, and public or private research institutions.

PIER funding efforts are focused on the following RD&D program areas:

- Buildings End-Use Energy Efficiency
- Energy-Related Environmental Research
- Energy Systems Integration
- Environmentally Preferred Advanced Generation
- Industrial/Agricultural/Water End-Use Energy Efficiency
- Renewable Energy Technologies

**The California Climate Change Center (CCCC)** is sponsored by the PIER program and coordinated by its Energy-Related Environmental Research area. The Center is managed by the California Energy Commission, Scripps Institution of Oceanography at the University of California at San Diego, and the University of California at Berkeley. The Scripps Institution of Oceanography conducts and administers research on climate change detection, analysis, and modeling; and the University of California at Berkeley conducts and administers research on economic analyses and policy issues. The Center also supports the Global Climate Change Grant Program, which offers competitive solicitations for climate research.

**The California Climate Change Center Report Series** details ongoing Center-sponsored research. As interim project results, these reports receive minimal editing, and the information contained in these reports may change; authors should be contacted for the most recent project results. By providing ready access to this timely research, the Center seeks to inform the public and expand dissemination of climate change information; thereby leveraging collaborative efforts and increasing the benefits of this research to California's citizens, environment, and economy.

The work described in this report was conducted under the California Environmental Sensing and Communications contract, number 500-02-004, work authorization MR-002, conducted by the Scripps Institution of Oceanography.

For more information on the PIER Program, please visit the Energy Commission's Web site www.energy.ca.gov/pier/ or contract the Energy Commission at (916) 654-4628. For more information on this research, please contact Dr. Dan Cayan, Scripps Institution of Oceanography, at 858-534-4507.

# Table of Contents

Preface ..... ii
Abstract ..... v
Executive Summary ..... 1
1.0 Introduction ..... 2
2.0 Objectives ..... 2
3.0 Overview ..... 2
4.0 Logger Design ..... 2
5.0 Data Transmission Network ..... 4
6.0 Field Testing ..... 5
7.0 Future Plans ..... 6
Appendix A: Meteorology and Hydrology in Yosemite National Park: A Sensor Network Application ..... A-1

# List of Figures

Figure 1—DL1-Met ..... 7
Figure 2—RM Young wind monitor interface ..... 7
Figure 3—Solar radiation meter ..... 8
Figure 4—Temperature ..... 8
Figure 5—Tipping bucket ..... 9
Figure 6—Core MSP module ..... 9
Figure 7—MSP430F149 ..... 10
Figure 8—SP1 ..... 10
Figure 9—EEPROM ..... 11
Figure 10—MultiMediaCard ..... 11
Figure 11—Power ..... 12
Figure 12—RM Young wind monitor interface ..... 12

Figure 13—RM Young wind monitor interface ..... 13
Figure 14—Electronics enclosure mounted on tower ..... 13
Figure 15—10 m tower with DL1-Met and sensors ..... 14
Figure 16—Network topology ..... 14
Figure 17—Map of DL1-Mets installed at Santa Margarita Ecological Reserve ..... 15
Figure 18—Plot of transmitted data from three stations during January 2005 ..... 16

## List of Tables

Table 1 – Sensor list ..... 3

# Abstract

To monitor the environment in the complex topography over the California region requires a denser network of meteorological and hydrological stations than is currently operating. The DL1-Met, an environmental data logger with an integrated telemetry system was developed to operate in a variety of locations, including remote meteorological and hydrological monitoring applications which require low power, low cost, and a small format.

The telemetry system gives scientists near real-time access to the data from remote installations. Field tests of a network of loggers have been ongoing since March 2003 in the Santa Margarita Ecological Reserve (SMER) northeast of San Diego, where the logger has proved to be durable and reliable.

A number of DL1-Met loggers installed in southern and central California are currently operational, collecting meteorological data at one-minute sampling intervals. The report describes an example of a network of low-cost hydrometeorological data loggers in Yosemite National Park, where the first few DL1-METs were installed in late summer, 2004.

Data from the loggers in SMER are transmitted by spread spectrum radio into a wireless network that deposits it into a dynamic data file system and Web access at the Scripps Institution of Oceanography's Hydroclimate Weather Observation Program website, at http://meteora.ucsd.edu/weather/observations/sio_other/crd_obs.html.

# Executive Summary

More climate information is needed in California non-urban and wilderness areas, which contain much of the State's hydropower, water resources, ecosystems, and recreation. The DL1-Met is a low-cost, low-power, small format environmental data logger and transmitter for remote meteorological and hydrological monitoring applications. It features an integrated telemetry system that gives scientists near real-time access to the data from remote installations. This data logger has been field tested in the Santa Margarita Ecological Reserve (SMER) northeast of San Diego, and a number of improvements to the hardware and software have been implemented during the period since March 2003. A set of DL1-Met loggers installed in southern and central California are currently operational, collecting meteorological data at one minute sampling intervals. Two DL1-Met loggers have been introduced in a hydrometeorological network in Yosemite National Park to understand weather, climate, and hydrologic conditions associated with variations and changes in the Sierra Nevada water budget. Where Internet connections are available, data from the loggers in SMER are transmitted by spread spectrum radio into a wireless network that deposits it into a dynamic data file system, with a Web interface at the Scripps Institution of Oceanography (SIO) (see http://meteora.ucsd.edu/weather/observations/sio_other/crd_obs.html).

## 1.0 Introduction

Wilderness areas in California are important sources of water supply and hydropower, and provide habitat landscapes that serve as key carbon dioxide sinks, ecosystem reserves, and recreation areas. Alternating current (AC) power is not available in many areas, and often there are requirements for small footprints, in order to keep impact low and maintain a high quality visitor wilderness experience. There is great variation in the climate and hydrology over the complex landscape in California, so there is need for monitoring hardware that is affordable enough to deploy in multiples over the landscape.

## 2.0 Objectives

The objectives of this project were to develop a low-power, low-cost data logger and communications package to record and transmit meteorological and other environmental information, and to develop a set of standard sensors and radio transmission capability.

## 3.0 Overview

The DL1-Met is a low-cost, low-power environmental data logger with an integrated telemetry system. The DL1-Met is being developed by the Integrative Oceanography Division at Scripps Institution of Oceanography (SIO) in collaboration with Drs. Dan Cayan and Mike Dettinger of the SIO Climate Research Division, who needed a low-power, low-cost, small-format logger/transmitter for remote meteorological and hydrological monitoring applications.

The telemetry system gives scientists near real-time access to the data from remote installations. Field tests of a network of loggers have been ongoing since March 2003 in the Santa Margarita Ecological Reserve (SMER) northeast of San Diego. These tests have resulted in improvements to the logger hardware and software, as well as in the development of a data storage and Web interface. Twenty-six DL1-Met loggers installed in southern and central California are currently operational, collecting meteorological data at one-minute sampling intervals. Data from the loggers in SMER are transmitted by spread spectrum radio into a wireless network that deposits the information into a dynamic data file system at SIO.

## 4.0 Logger Design

The DL1-Met is an embedded system built around a Texas Instruments MSP430F149 mixed signal microcontroller. This microcontroller was selected because of its low power requirements, integrated 12-bit analog-to-digital (A/D), and multiple timer input channels. A diverse suite of environmental sensors connects to the logger (Table 1). Engineering schematics of the DL1-Met and its components are provided in Figures 1–13. Temperature, humidity, winds, and solar radiation are sampled each second and averaged over the minute. Maximum gusts for winds are stored along with the average wind values. Barometric pressure is measured once per minute. Precipitation (Figure 5) is stored as a running total. Data are continuously logged and stored internally, and a subset is transmitted via a wireless network.

**Table 1 – Sensor list**

| Sensor | Channels | Range and Accuracy | Manufacturer | Model # |
|---|---|---|---|---|
| Temperature | 2 | -30°C to 50°C ± 0.2°C | ThermX | YPT8-3.5-33T-20-SX |
| Humidity | 1 | 10% to 90% RH ± 2%<br>0-10%, 90% to 100% RH ± 4% | Sensiron | SHT75 |
| Solar Radiation | 1 | 3000 W/m$^2$ ± 5% | Licor | LI-200SA |
| Precipitation | 1 | ±1% at rates of 1in/hr | Texas Electronics | TE525WS |
| Wind | 2 | Speed: 0.9 to 78 m/s ± 5%<br>Direction: 0-360° ± 7º | Davis Instruments | 7914 |
| | | Speed: 0.4 to 49 m/s ± 1.1%<br>Direction: 0-360° ± 4º | Met One | 034B |
| | | Speed: 0.5 to 50 m/s ± 0.5 m/s<br>Direction: 0-360° ± 5º | RM Young | 03001 |
| Pressure | 1 | 300-1100 mbar ± 1.5 mbar<br>(-10°C to 60°C) | Intersema | MS5534A |
| Battery Voltage | 1 | 3-18V | n/a | n/a |

The logger uses a MultiMediaCard (MMC) for data storage (Figure 10). MMCs are non-volatile, removable storage media that are in common use in many MP3 players and digital cameras. The current design uses a 32 MB MMC, but any size MMC can be used. Under the one minute sampling rate operating on the present suite of 15 variables, a 32 MB card allows the logger to record almost two years of data. Prior to logger deployment, a computer is used to format the MMC, and write a blank data file to it. This obviates the additional development required to design and implement a file system on the logger. The data are written in 512 byte blocks, starting at the first unwritten sector of the data file. Each block includes a header with logger number, date and time stamp, and battery voltage. The rest of the block is filled with sensor data records from the previous 16 minutes of sampling. The recorded data file can be read from the MMC at the end of the deployment with any computer that supports MMCs.

Quiescent power consumption of the full system is on the order of 7.5 mW, with peak power consumption jumping to ~500 mW when the radio is operational. An alkaline D cell battery pack is used to power the logger (Figure 11). The battery pack is made up of 12 cells: two parallel banks of six cells in series. Battery life is projected at one year, given 75% efficiencies of the batteries and power supplies. Alternate sources of powers such as solar or AC can also be used to power the logger, to extend the time it can be deployed.

The logger, telemetry unit, and batteries are housed in an inexpensive, plastic, waterproof, enclosure with O-ring seal (Figure 14). The logger and associated sensors are installed on 10 m towers (Figure 15). All of the external sensors are cabled back to the enclosure and connect using water-resistant connectors. An antenna cable connected to the telemetry unit runs from the enclosure up to a 3 dB omnidirectional antenna at the top of the tower.

The overall cost of a fully packaged DL1-Met including one temperature probe, humidity sensor, pressure sensor, and battery pack is approximately $600. The cost of the telemetry system—radio, antenna, lightning arrestor, and cabling—is approximately $500.

## 5.0 Data Transmission Network

The logger has an RS-232 interface that allows it to interface to a broad range of communications devices. At SMER, the present configuration is integrated with a telemetry package that interconnects to a higher-level network allowing data to be broadcast in near real time via the Internet for display or analysis (Figure 16). Groups of loggers are setup in a star network. Each logger in the network sends its data to a central hub. At each hub, data received from the loggers is converted from a serial stream to an Ethernet stream. At SMER, the hubs are linked to an 802.11b wireless SMERnet backbone http://fs.sdsu.edu/kf/reserves/smer/ maintained in the reserve by San Diego State University, which connects to the National Science Foundation (NSF) supported High Performance Wireless Research and Education Network (HPWREN) wireless network http://hpwren.ucsd.edu/. Data from transmitting loggers are streamed directly into an SQL database. The database is queried on an hourly basis to update Web plots from each of the sensors for public display on the Internet.

Telemetry in the star networks between the logger and the hub is provided by MaxStream 9XStream 900 MHz 19200 Baud Wireless OEM Modules (www.maxstream.net). The MaxStream modules operate in the 900 MHz license-free ISM band. They have a transmission range greater than 11 kilometers (km) (6.8 miles) with standard omnidirectional antennas. Radio range can be increased through the use of higher-gain directional antennas.

The transmission links between the loggers and a hub are optimized with Time Division Multiple Access (TDMA) protocols to maximize throughput while minimizing the potential for data collisions. Each logger is programmed with a predefined time slot to transmit its data. A subset of the internally recorded data is transmitted every half hour. Each transmission consists of six frames of data filled at five-minute intervals during the previous half hour. For example, the six frames might include data collected at 5, 10, 15, 20, 25, and 30 minutes past the hour. A frame is a one-minute data sample of 55 bytes that is made up of a time stamp, battery voltage, and each of the 10 environmental variables, including pressure, two temperatures, humidity, rainfall, solar radiation, two north-east wind components, and two north-east wind gusts. The six frames are combined into an ensemble. The ensembles are sent twice during each transmission period to increase the probability of a continuous data record. An analysis of the data return through the network from 10 stations over a twelve-day period showed that the total throughput was better than 99.8% with a standard deviation of ± 0.3%.

At the hubs, conversion from a serial stream to an Ethernet stream is done using external device servers from Digi International (www.digi.com). Two different Digi devices are being used for the project. One is the Digi One TS with MEI (with one serial port) and the other is a Digi PortServer TS 2 with MEI (with two serial ports). These devices are powered off 9-30V DC, which made them suitable for connection to a solar power system already installed at the hub sites. The Digi devices were connected to an Ethernet switch and 802.11b wireless network already part of the infrastructure at SMER. These units can be remotely configured and checked over the Internet using software provided by Digi.

The Digi devices forward the data frames over the Internet to a server on the Scripps campus. An autonomous data collection script converts the data frames to engineering units and inserts them into an SQL database. The database is queried on a hourly basis and plots are generated for display on the Scripps Hydroclimate Weather Observation Program website. (See http://meteora.ucsd.edu/weather/observations/sio_other/crd_obs.html.)

## 6.0 Field Testing

A total of twenty-six stations have been installed in southern and central California. Eighteen stations have been installed in the Santa Margarita Ecological Reserve (SMER) northeast of San Diego (Figure 17). The reserve is a 4344-acre research station straddling the borders of San Diego and Riverside counties. One station (Cockleburr) has been deployed overlooking the Pacific Ocean just north of the mouth of the Santa Margarita River in Marine Corps Base Camp Pendleton. Two stations (Greenhouse and SIO Pier) are installed on the campus of the University of California, San Diego. Two stations (Gin Flat and Dana Meadows) are installed in Yosemite National Park; these stations are part of a network of hydrological and meteorological sensors that are described in Appendix A. One station is installed just east of Yosemite National Park at the United States Forest Service office in Lee Vining. Several of the stations have been collecting data for over a year. These data have been used to improve system design and integrity, and to improve sensor quality.

Early field tests showed problems with the original humidity sensor design. The initial designs used a humidity sensor from General Eastern. There were considerable differences between sensors, which would have resulted in costly calibration in a long field program. Based on the data collected, a new humidity sensor from Humirel was selected for field testing. The interchangeability of these sensors was much better, and no calibration was required. However, the Humirel humidity sensors started to fail in the field. The cause of the failure was determined to be corrosion of the sensor element. The logger now uses a SHT75 High Precision Humidity Sensor from Sensiron. This new sensor has an absolute accuracy of ± 2% relative humidity (RH) (10% to 90% RH). It is protected from contamination with a GORE Prevent filter. The response of the SHT75 has been compared to a Vaisala Humitter 50, with favorable results.

The pressure sensor in the initial design has been replaced with a Intersema MS5534A. This sensor precludes the need for costly calibrations and reduces the complexity of the original logger design. It has been tested against a Paroscientific 216-B Digiquartz Pressure Transducer, with favorable results.

The design of the transmission format between the loggers and hub has undergone extensive changes as result of testing in the field. The modifications increased the reliability and throughput of the data link. Testing also demonstrated the need to change the hardware at each of the hub sites. The original network was designed with Intrinsyc Cerfcubes at each of the hubs. The CerfCube was a Linux-based embedded Ethernet device. These units have been replaced by Digi terminal servers, which are much easier to administrate.

Figure 5 shows a plot of the data collected from three stations for a week's duration during the month of March 2004. It is indicative of the quality of the data coming in from all eighteen of the sites in the study area.

## 7.0 Future Plans

Future improvements to the logger are planned. Most important, the integration of several new sensors will be included in the design. These include: a fuel moisture sensor, a stream gauge sensor, and a soil moisture probe. The addition of these additional sensors will require some minor revisions to the electronics. During this revision process, the following additional changes to the logger design will be made: (1) migrate to Secure Digital (SD) memory cards for data storage, (2) add additional general purpose A/D inputs, and (3) change transmission data frame length to incorporate new sensors. Three DL1-Met loggers and attendant sensors are presently being field tested in the cold weather and snowy environment of Yosemite National Park and the United States Forest Service office in Lee Vining. Although these instruments are not transmitting, the initial view of a downloaded dataset in late 2004 indicated that the loggers were operating normally. Further evaluation will be made in late spring, 2005 when loggers can be accessed to download the entire fall-winter-spring 2004–2005 data sequence.

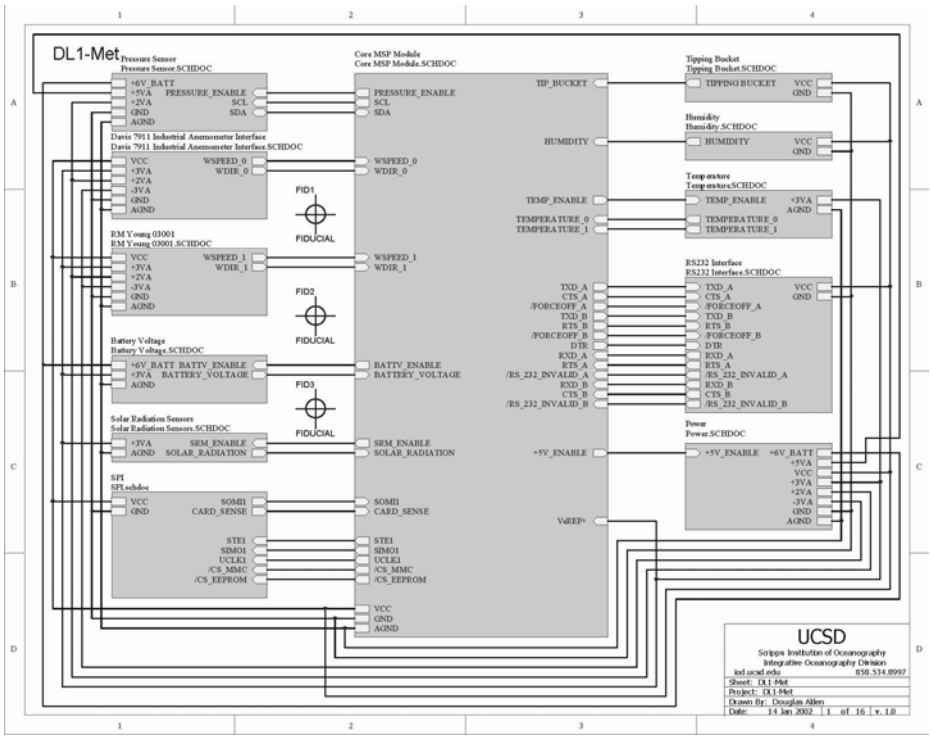


**Figure 1 – DL1-Met**

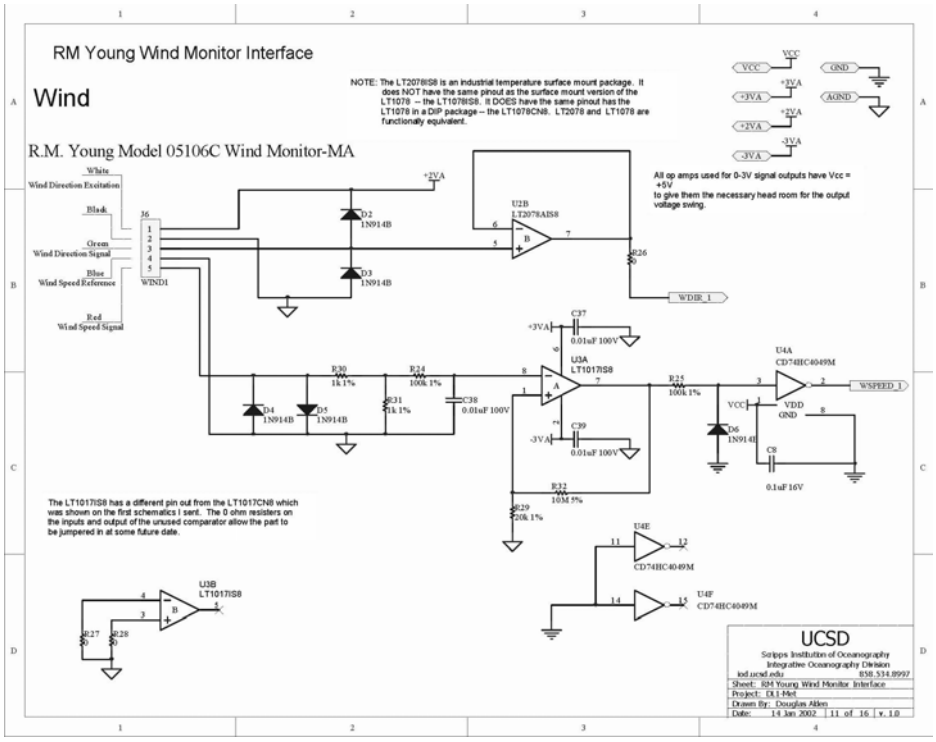


**Figure 2 – RM Young wind monitor interface**

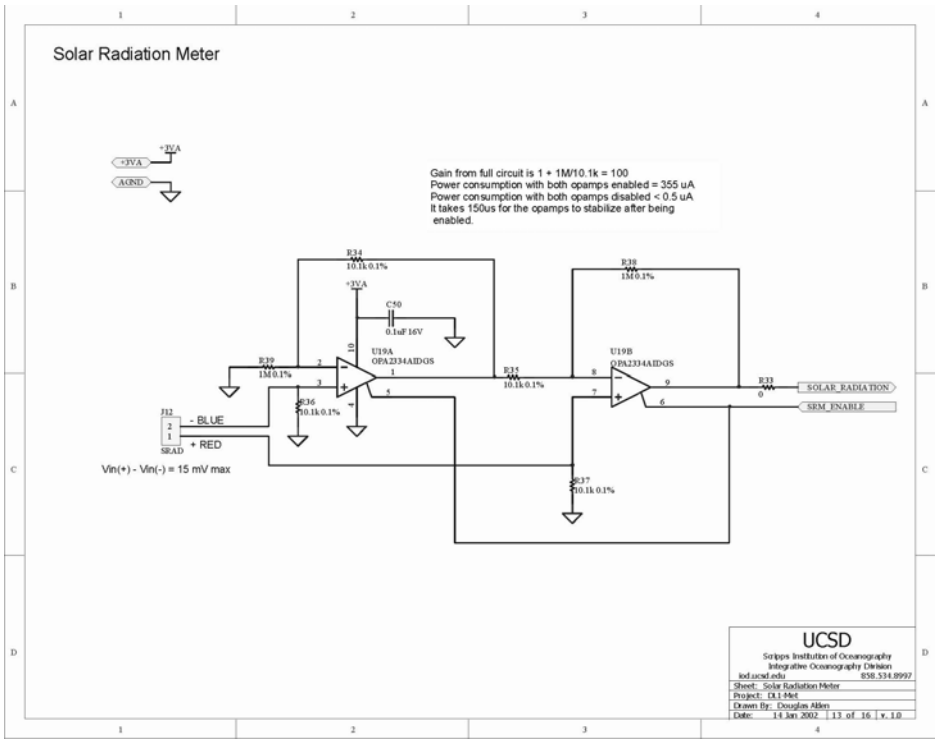


**Figure 3 — Solar radiation meter**

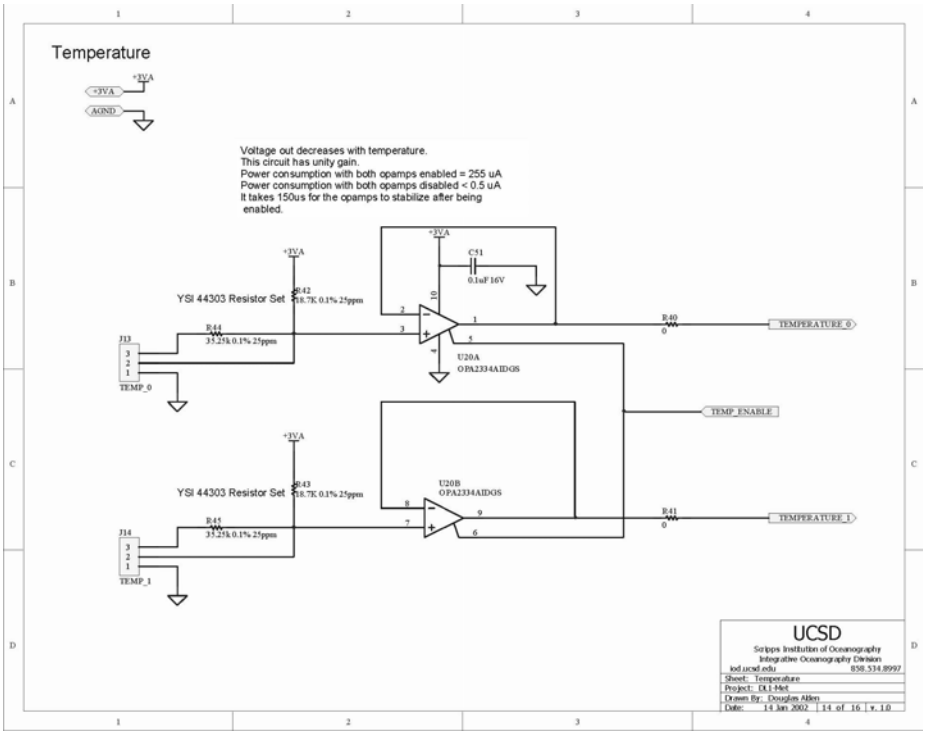


**Figure 4 — Temperature**

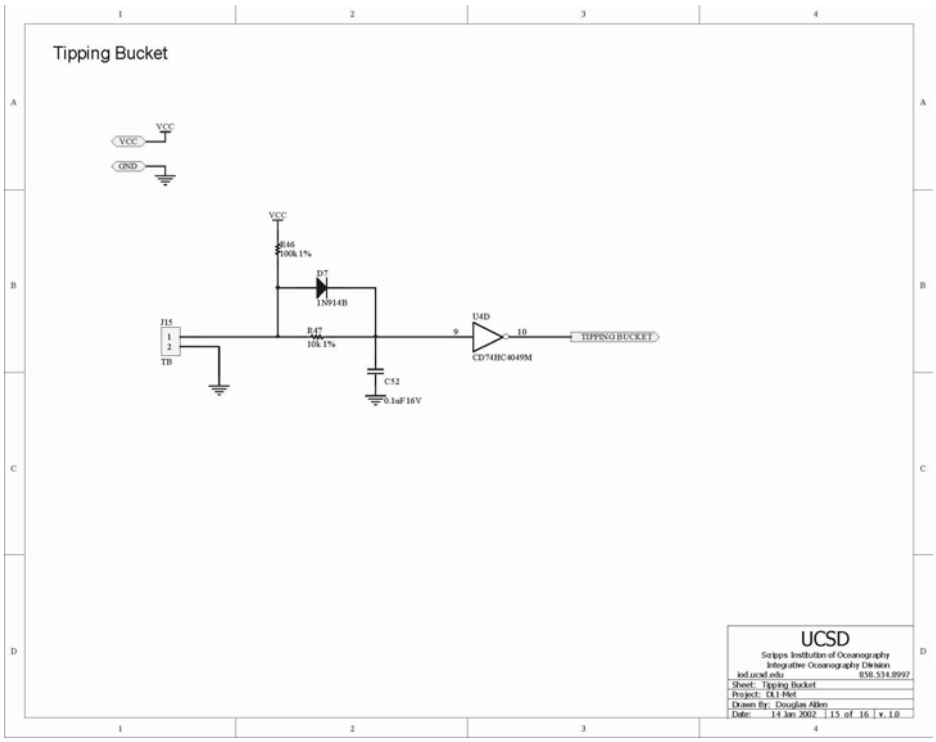


**Figure 5—Tipping bucket**

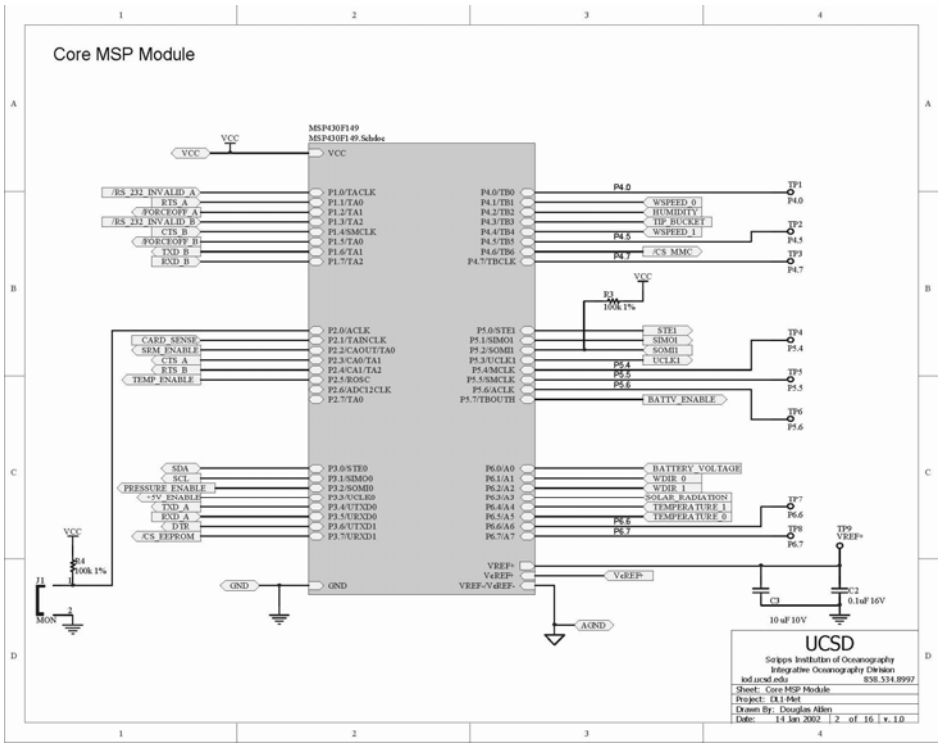


**Figure 6—Core MSP module**

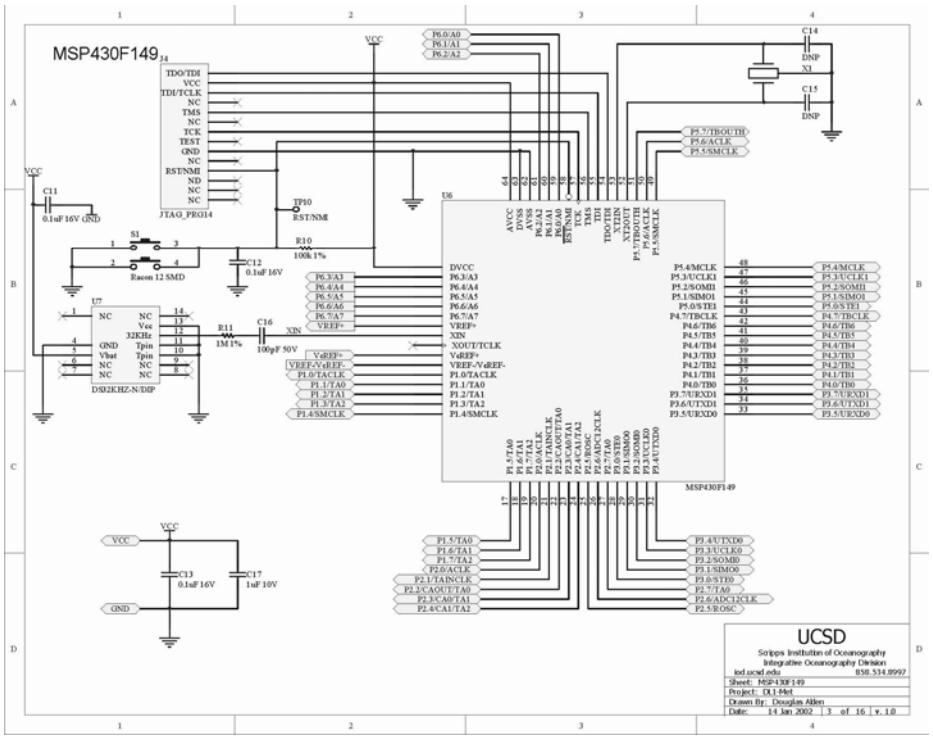


**Figure 7 – MSP430F149**

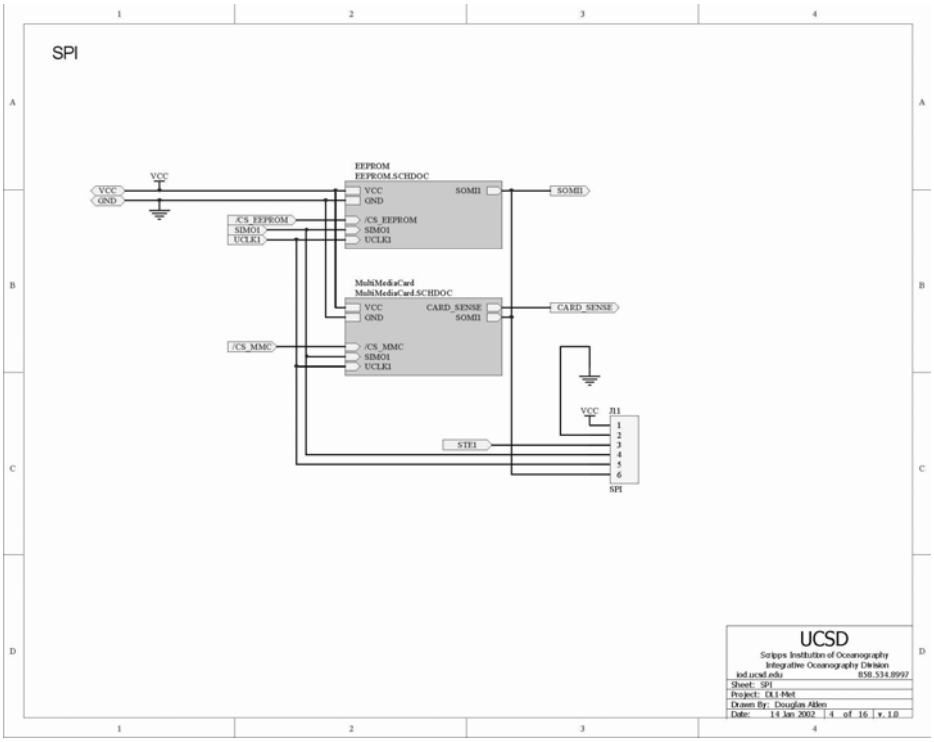


**Figure 8 – SP1**

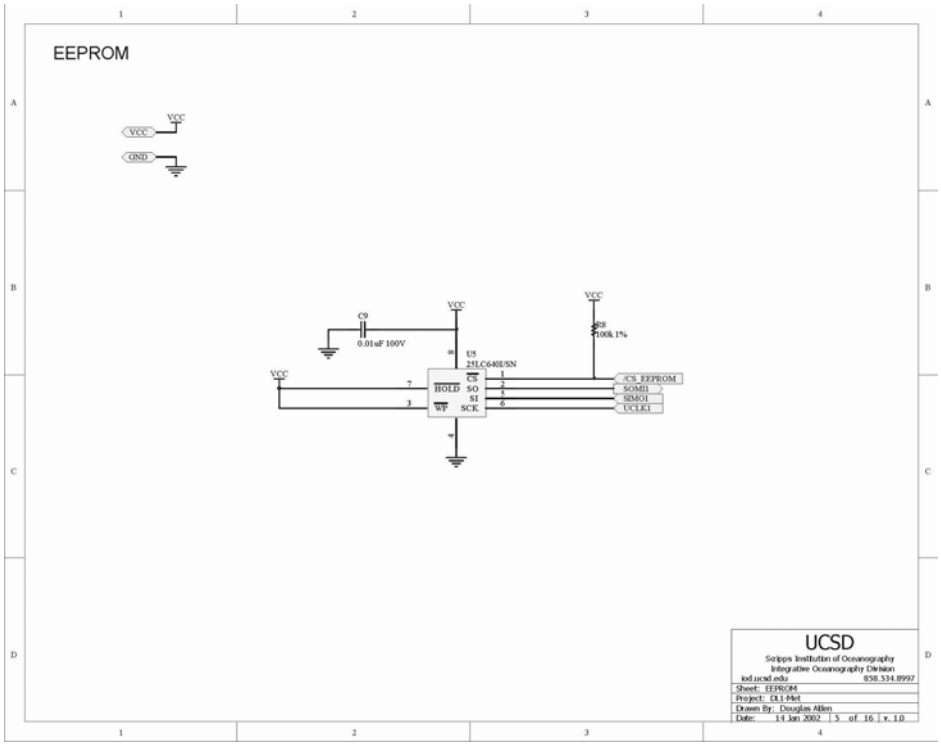


**Figure 9 — EEPROM**

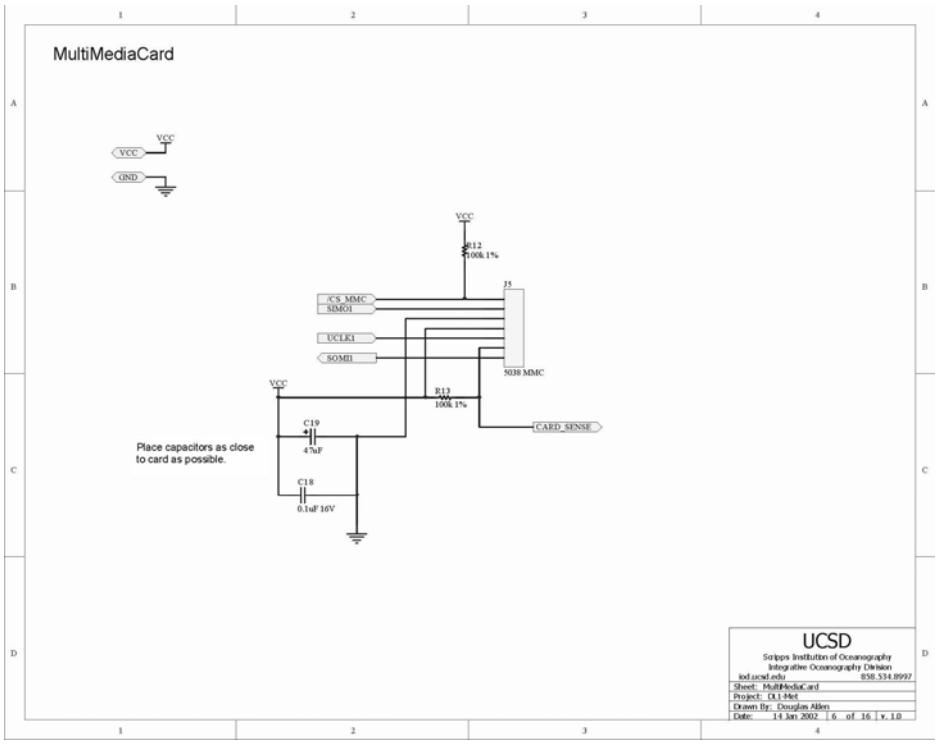


**Figure 10 — MultiMediaCard**

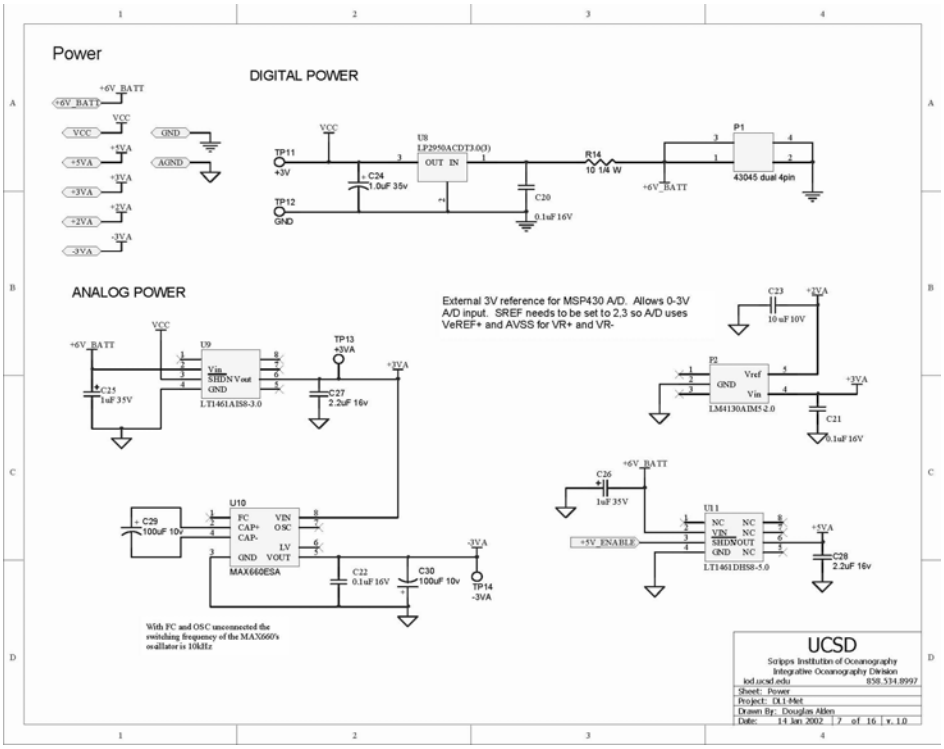


**Figure 11 – Power**

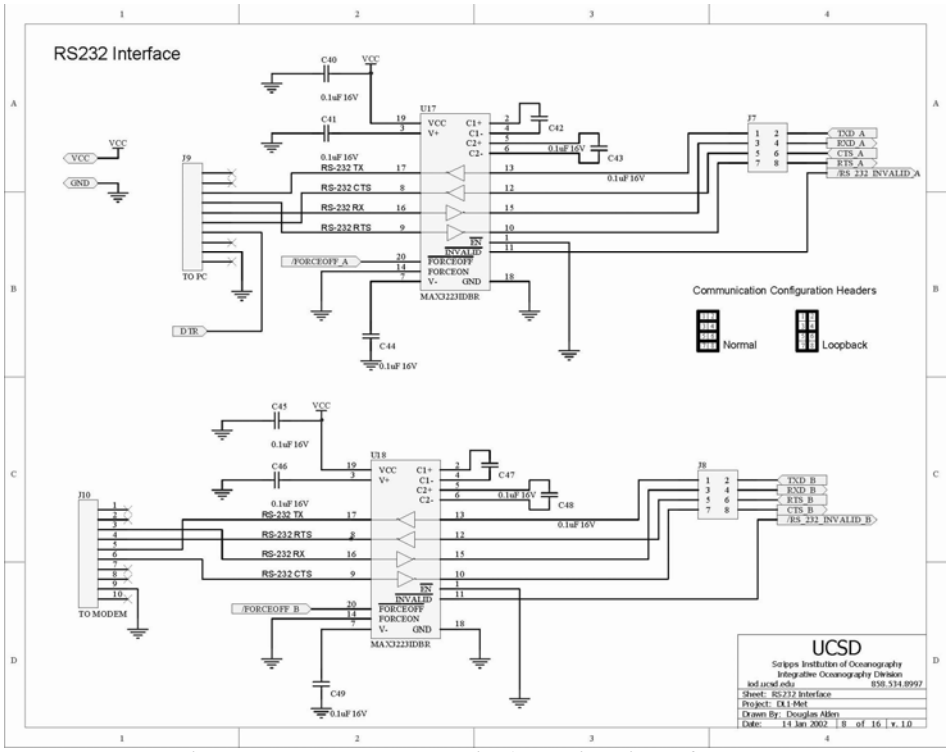


**Figure 12 – RM Young wind monitor interface**

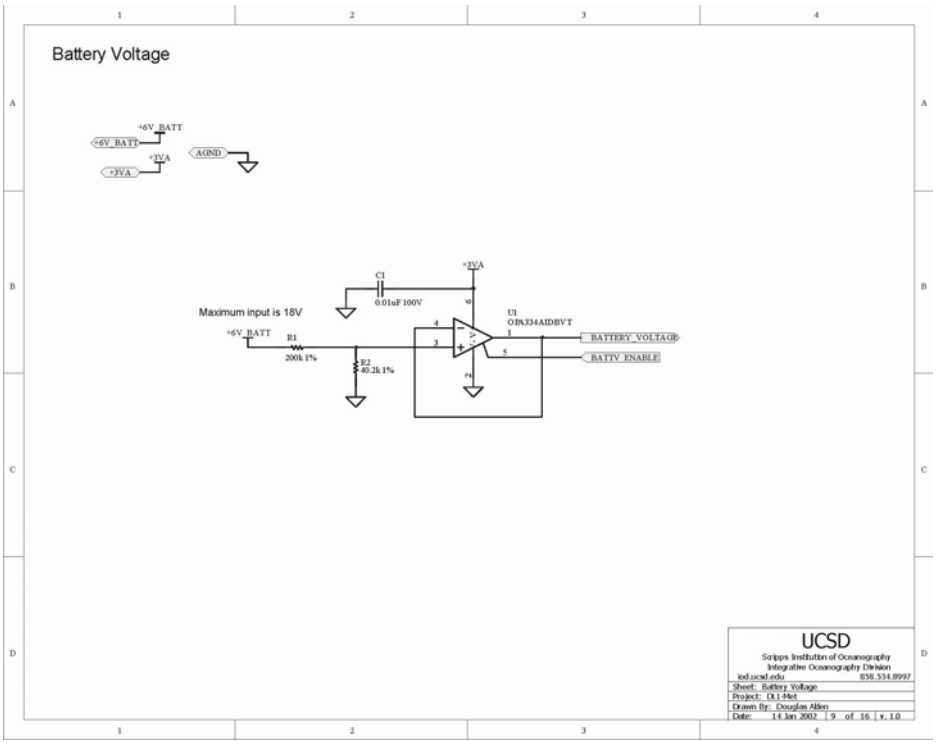


**Figure 13—RM Young wind monitor interface**

**Figure 14—Electronics enclosure mounted on tower**

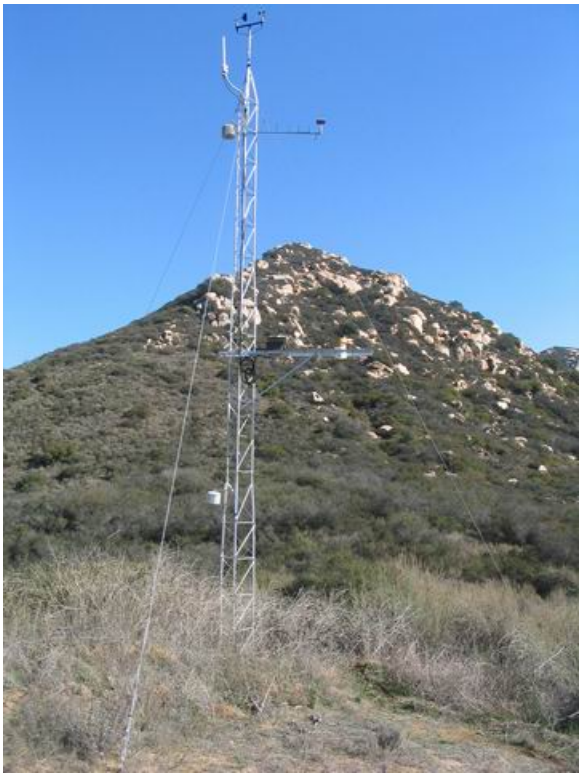

**Figure 15—10 m tower with DL1-Met and sensors**

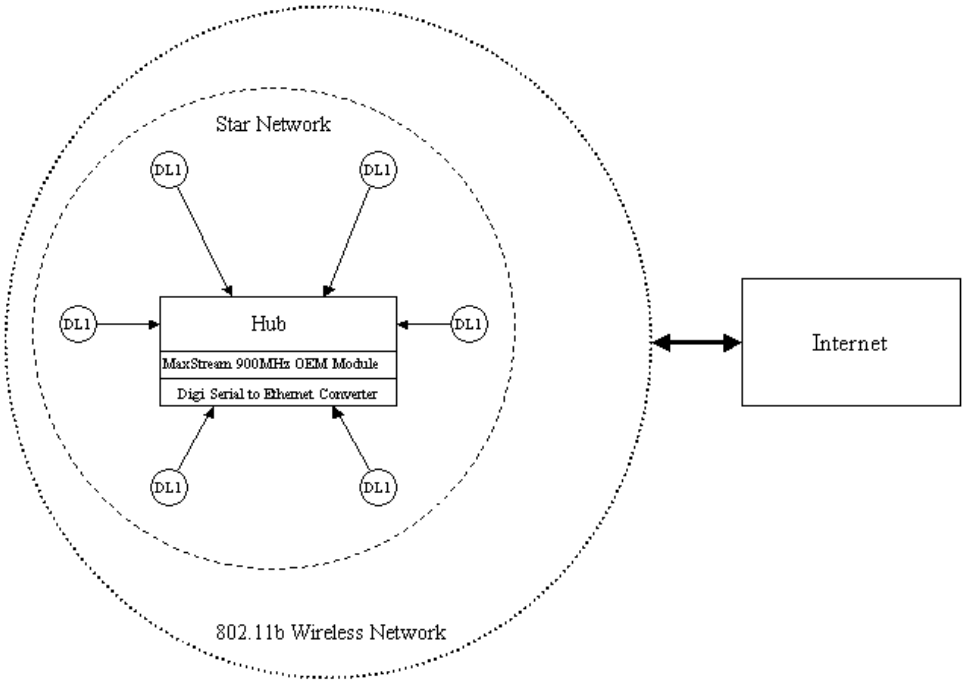


**Figure 16—Network topology**

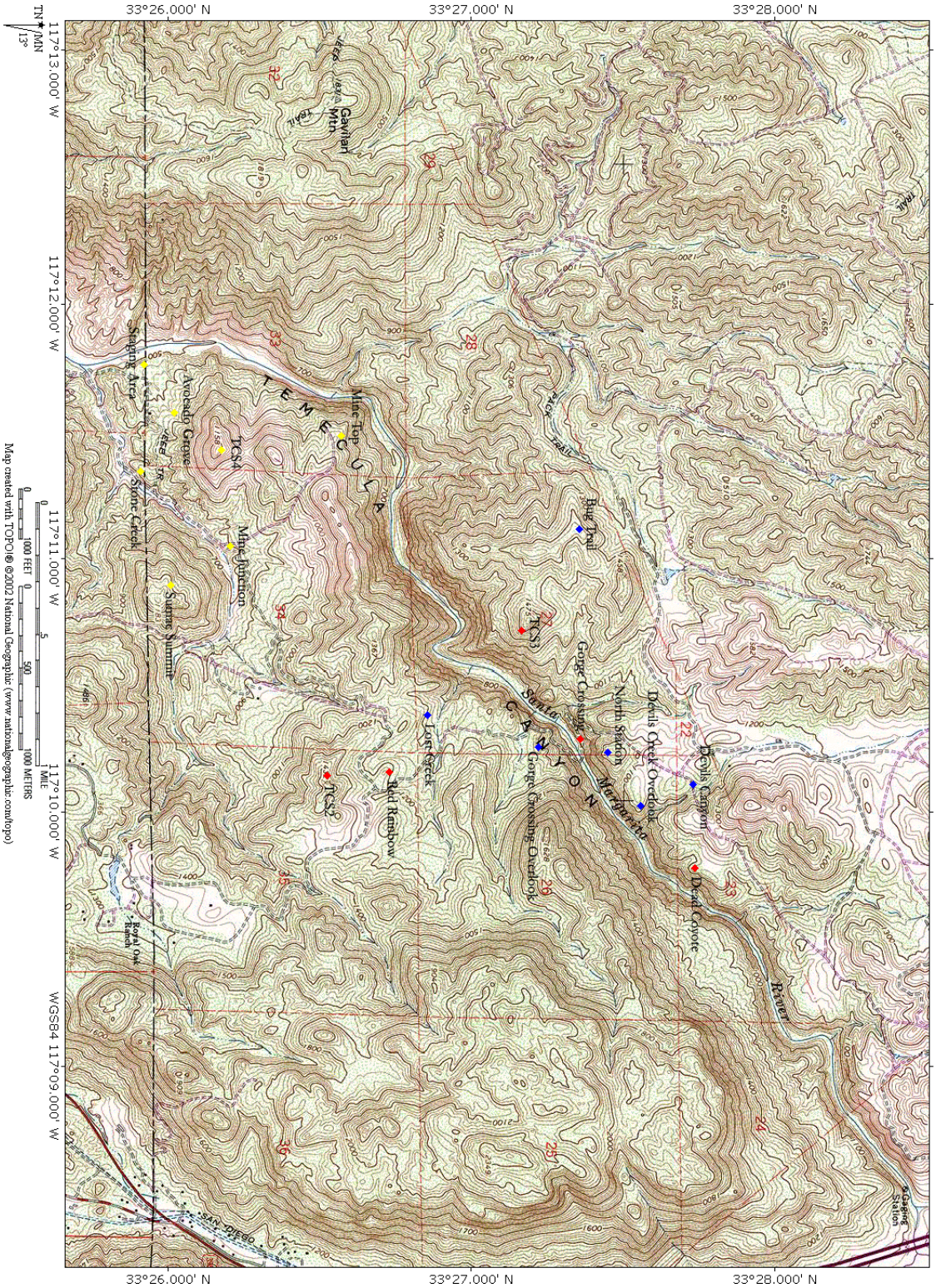
33°28.000' N
33°27.000' N
33°26.000' N
117°13.000' W
117°12.000' W
117°11.000' W
117°10.000' W
117°09.000' W
WGS84
Gavilan Mtn
Mine Top
Avocado Grove
Stone Creek
Mine Junction
Sugarloaf Summit
Bug Pass
Gorge Crossing
North Station
Devils Creek Overlook
Devils Canyon
Dead Coyote
Gorge Crossing Overlook
Lost Creek
Red Rainbow
Santa Margarita
River
Gabbro Station
Rancho Trail
Ridge Trail
Rocky Trail
Rocky Trail
Rocky

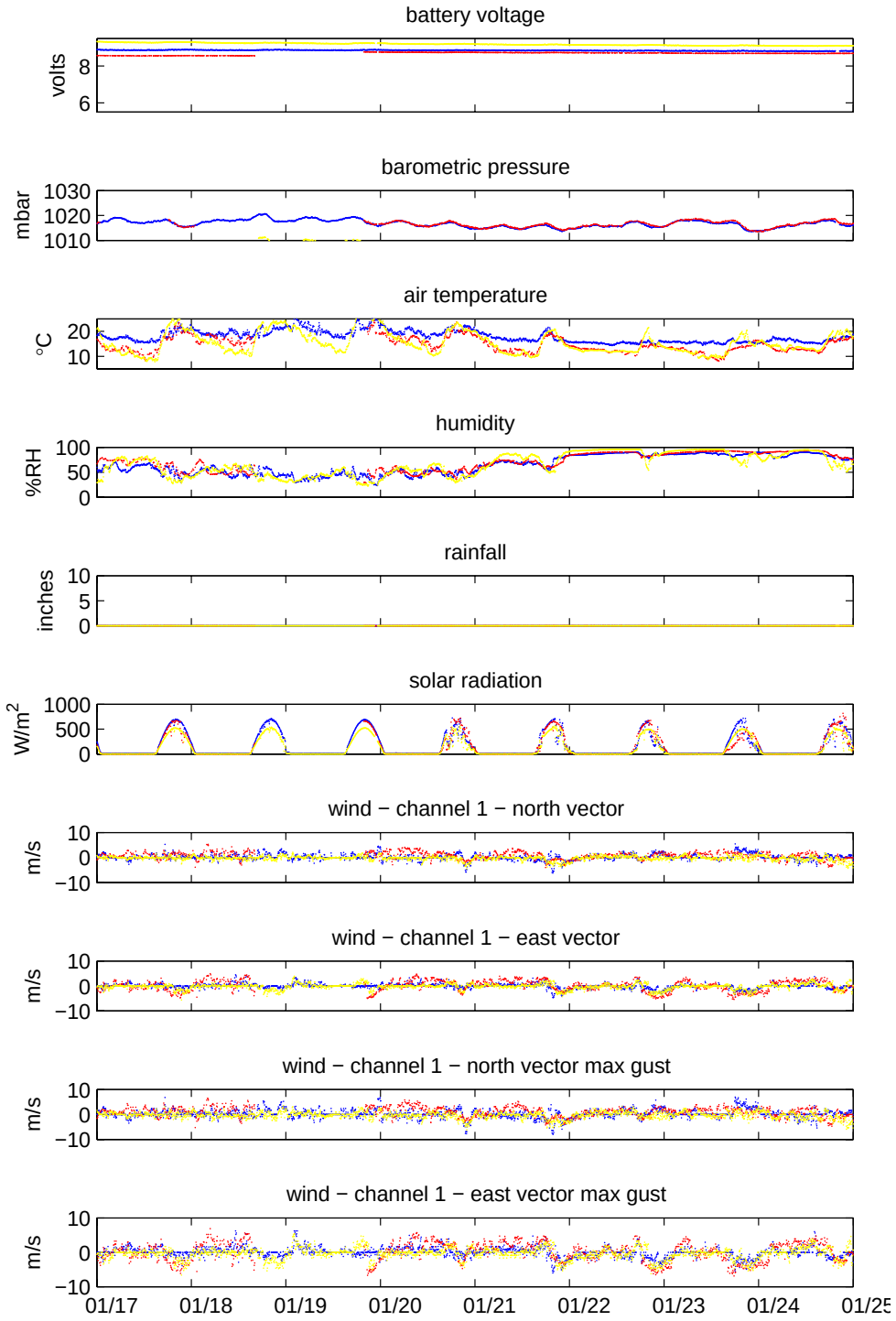


**Figure 18—Plot of transmitted data from three stations during January 2005**

# Appendix A

# Meteorology and Hydrology in Yosemite National Park: A Sensor Network Application

Jessica D. Lundquist[1], Daniel R. Cayan[1,2], and Michael D. Dettinger[2,1]
[1] Scripps Institution of Oceanography (SIO), UCSD MC-0213, 9500 Gilman Drive, La Jolla, CA 92039
{jlundquist, dcayan}@ucsd.edu
[2] United States Geological Survey, 9500 Gilman Drive, La Jolla, CA 92039
dettinge@tenaya.ucsd.edu

## Abstract

Over half of California's water supply comes from high elevations in the snowmelt-dominated Sierra Nevada. Natural climate fluctuations, global warming, and the growing needs of water consumers demand intelligent management of this water resource. This requires a comprehensive monitoring system across and within the Sierra Nevada. Unfortunately, because of severe terrain and limited access, few measurements exist. Thus, meteorological and hydrologic processes are not well understood at high altitudes. However, new sensor and wireless communication technologies are beginning to provide sensor packages designed for low maintenance operation, low power consumption and unobtrusive footprints. A prototype network of meteorological and hydrological sensors has been deployed in Yosemite National Park, traversing elevation zones from 1,200 to 3,700 m. Communication techniques must be tailored to suit each location, resulting in a hybrid network of radio, cell-phone, land-line, and satellite transmissions. Results are showing how, in some years, snowmelt may occur quite uniformly over the Sierra, while in others it varies with elevation.

## Introduction

California's water resources depend vitally upon runoff from its high elevations, particularly the snowmelt-dominated Sierra Nevada. In addition to providing over half of the state's water supply, rivers and river basins in the Sierra Nevada carry sediment, nutrients and pollutants and act as vital arteries in the regional airshed. Climate variability in the region is high, and annual precipitation and runoff fluctuate from under 50% to over 200% of climatological averages. In recent decades, streamflow records from watersheds in western North America, collected at relatively low elevation gages, suggest that an alarming change toward earlier snowmelt and snowmelt runoff has been occurring (Cayan et al 2001, Stewart et al 2002, Dettinger and Cayan 1995). Whether this reflects a natural climate variation or an early symptom of anthropogenic climate warming is not known. In the long run, it is estimated that, in response to projected global warming of 3 degrees C, the spring-summer

snowmelt would be diminished by one third to one half (Roos 1987). Additionally, virtually all modern climate models suggest there will be higher annual evaporative demands as climate warming develops, and some models have predicted substantial changes in the State's precipitation. However, the data necessary to detect and understand these changes, and provide ground truth for numerical models is sparse, to the point that many of the variations and processes involved are ill-known and can only be inferred.

Much of the problem arises from our historic monitoring system. Currently, most meteorological observations are collected near highly populated, low elevation regions (Figure 1), while many of the important hydrologic processes occur in unpopulated wilderness areas, often in rugged terrain and high elevations. For example, snowmelt processes are spatially complex and thus difficult to forecast and incorporate in large-scale hydrologic and atmospheric models. Much of the difficulty arises because snow occurs in patches of nonuniform depth and density, particularly in mountainous regions. In situ measurements of the snowpack are both difficult to make and not necessarily representative of region-wide characteristics. Satellite images and geographical information systems have increased spatial coverage, but this data, which is often infrequent in time, is still difficult to relate to the actual river discharge originating from a basin. Apparently simple characteristics, such as the distribution and timing of snow accumulation, snowmelt, and runoff into rivers with elevation, are not routinely quantified.

Data collection in high elevation wilderness areas historically has been difficult and expensive because of the extra costs and logistics required to visit snowy sites and preserve their undisturbed character. Many such regions are designated as national parks and wilderness, requiring special permission for instrument installation and access. However, new sensor and wireless communication technologies designed for low maintenance operation, low power consumption and small, unobtrusive footprints are providing new opportunities to monitor mountainous watersheds. Such technologies will allow a significant expansion of data collection vital for understanding, predicting and informing about the variability of climate and water resources in the State and the Nation.

## Sensor Network: Yosemite National Park

For high altitude monitoring, the most immediate concerns are access -- both in terms of transportation to the monitoring sites and in terms of permission to use the given sites -- and scientific merit. With these factors in mind, the Merced and Tuolumne Rivers in Yosemite National Park, which drain the western slope of the Southern Sierra from a range of snowmelt-contributing elevations from 1,200 to 3,700 m, have been chosen as test basins. One of the greatest assets of this region is the Tioga Road (Highway 120), which crosses the range at elevations from 1,200 to 3,050 m. This is one of only five highways transecting the Sierra Nevada, and of the five, it has the highest summit. The river basins have been protected by the National Park Service for over 100 years. Not only does this make the region an excellent

laboratory for natural, unimpaired processes, but it provides an important opportunity for designing instruments for wilderness areas.

Scientifically, the Merced River gage at Happy Isles has a long daily record (1916-present) of unimpaired flows, and a spatially-distributed USGS watershed model is available for testing hypotheses. Several studies (Cayan et al 2001, Peterson et al 2000) have shown that the Merced's flow characteristics are representative of basins throughout the Western United States. Since 1999, instruments measuring hourly water levels, conductivities, and temperatures have been installed at Pohono Bridge, on Tenaya Creek, and at Happy Isles on the Merced River. Starting in summer 2000, hourly measurements of snow depth and downward shortwave radiation have been added to augment measurements of air temperature, humidity, precipitation, and snow liquid water content measurements at five California Department of Water Resources (CDWR) telemetered snow pillow stations at elevations ranging from 2,000 to 3,000 m.

In summer 2001, in consultation with Park planners and scientists, the USGS, and the CDWR, we obtained necessary research permits and began installing a river monitoring network in the high country of Yosemite National Park. As a result, twenty instruments recording hourly water level and temperature were installed in the upper reaches of the Merced and Tuolumne Rivers (Figure 2) to provide information about how and when different subbasins contribute to the river's flow. Sensor locations were selected to monitor subbasins with a variety of topographic characteristics. For example, some drain primarily north-facing slopes, and some drain primarily south-facing slopes. These measurements will be combined with remote-sensing and models to understand where and when snowmelt occurs and how it moves through these basins. Four water conductivity sensors were also deployed to make hourly measurements in the Merced and Tuolumne Basins. In summer 2002, stream chemistry measurements were made by NPS personnel at various points along both watersheds to measure water quality and composition throughout the summer. At the same time, discharge measurements were made at each station to establish curves relating discharge rates to water levels.

Along Highway 120, during Summer 2002, we also began to establish a set of meteorological stations (Figure 2) that augment the snow/meteorological stations operated by the CDWR Snow Surveys. Presently, our stations consist of approximately 25 internally-recording temperature/relative humidity sensors, stationed along Highway 120, along the west slope of the Sierra up to the crest of Tioga Pass, and down to the Mono Basin at Lee Vining. This array will monitor weather systems and air masses as they sweep across the Sierra from the Pacific, or occasionally, from the Western Great Basin. We have plans to expand the sensor suite at several of these stations to include other elements such as wind and solar radiation. We also expect to install a webcam at Tioga Pass to view snow in surrounding alpine areas. In addition to our stream and atmospheric temperature/humidity gages, we are collaborating with Frank Gehrke of CDWR to install a full snow/meteorological station at Merced Lake, in the Upper Merced River drainage, complete with GOES satellite telemetry.

## Preliminary Results

Because of the scarcity of high elevation data, our first year's measurements already provide interesting new insights into how snow melts and spring runoff begins at different altitudes in the Sierra. Common experience and intuition suggest that snow at lower elevations melts first. The standard atmospheric lapse rate describes a decrease in temperature of 6.5°C per 1000 m elevation gain. Reece and Aguado (1992) studied snow pillow stations in the Truckee River Basin and found an approximate 4-day delay in the start of the snowmelt season for each 100 m increase in altitude. Averaged over many years (Figure 3), these results are typical. Sierra Nevada temperature (Figure 3, right axis) increases steadily through the spring. Because temperatures decrease with increasing elevation, the average day of maximum snow accumulation, which we are using as an index of snowmelt initiation (Figure 3, dots, left axis), is later in the season for higher elevation snow pillow stations. However, what happens in a given year, as exemplified by spring 2002, may vary widely from the average values.

In Spring 2002, ten water-pressure sensors measured the onset of spring runoff in subbasins of the Tuolumne River in Yosemite National Park, California. Subbasin areas ranged from 6 $km^2$ to 775 $km^2$, and measurement elevations ranged from 1200 m (3,800 ft) at Hetch Hetchy to 2900 m (9,600 ft) at Gaylor Creek. Some were north-facing and some were south-facing. Estimated mean April radiation varied from 552 $W/m^2$ in Budd Creek Basin to 635 $W/m^2$ in Gaylor Creek Basin. Despite these differences, streamflow rose simultaneously, just before April 1st, at all gages (Figure 4). The date of maximum snow accumulation and initiation of spring melt also was remarkably uniform from elevation to elevation (Figure 5). Using the same stations, mean temperature and melt rates were calculated in five elevation bands. In 2002, two large increases in temperature preceded spring snowmelt (Figure 6a). After the first, a small amount of melting occurred at all elevations (Figure 6b) so that, during the second temperature increase, melting began in earnest everywhere. Notice that stream runoff only began in earnest after minimum temperatures exceeded 0°C at most elevations.

The rapid and simultaneous initiation of snowmelt and runoff at all elevations in 2002 shows that the onset of spring can differ greatly from the long-term average conditions. How common are sudden springs compared to gradual ones? The 85 years of Yosemite Valley temperature and Merced River discharge data suggest that spring most often occurs suddenly. Averaging the temperatures before and after the day the river started rising (spring pulse days, as described in Cayan et al. 2001) reveals that maximum temperatures (Figure 7a) rise about 8°C and minimum temperatures (Figure 7b) rise about 5°C during the weeks surrounding the spring pulse. Out of 85 years, only 8 years had rapid flow increases that were not accompanied by dramatic temperature rises. This suggests that spring runoff is closely tied to large-scale atmospheric circulation patterns, and further study may reveal ways to use this link to improve forecasts of water supply and timing. However, before forecasts can improve, real-time data is essential.

## Communications Issues

Communications in the Park are difficult because of the high relief. Conditions are especially challenging in river valleys, which are crucial to our study but are typically isolated by surrounding topography. We are exploring potential wireless communications options that include digital cellular, satellite, and land line (phone line) links to the Internet. At several sites (circled sites on map, Figure 2), we have obtained or requested Park approval to install communications equipment. There is tension between the resource-management interests of the Park, which seek more environmental information, and the wilderness-preservation interests, which seek to protect wilderness values from instrument installations. Seeking to balance these interests, our communications will depend on site location and will likely include radio, cell phone and satellite transmissions. The equipment will need to interface with the variety of existing and new sensors and data loggers used by the agencies working in this area. Implementing workable communications solutions in Yosemite will serve as a prototype for other instrumental nodes and networks that will need to be developed to serve California's increasingly multifaceted environmental monitoring needs.

Because access is often difficult in these remote and snowy settings, power consumption and long-term backups of data collected are important design considerations. Thus, SIO Development Engineer Douglas Alden is building a low cost, low power data logger (Figure 8) that will log, record and wirelessly transmit data from several meteorological and hydrological sensors. The logger is designed for wilderness applications and will accommodate several standard meteorological and hydrological sensors. The current version will be powered by a small battery pack, and its 32MB of memory is adequate to store several months of data (while logging measurements at three-minute intervals).

Installing and monitoring a high density of sensors in Yosemite will reveal the spatial variability of meteorological properties at high altitudes. Data intercomparison within the region will also help identify sensors that may not be properly calibrated or indicative of region characteristics, prompting timely repairs and replacements. Connecting the instruments to the internet will eliminate the limitations of data storage and will minimize the travel costs involved in data retrieval. However, battery power will continue to be a limiting factor. Solar panels, in conjunction with 12-volt batteries, are currently used at the CDWR snow pillows, but the large visible panels are not unobtrusive enough for protected wilderness areas. Further technological advances in power generation and consumption are desirable.

## Future Directions

High altitude observations are necessary to improve understanding of mountain snowpacks, a crucial resource that provides over half of California's water supply. Because the settings are in remote, protected areas, instruments must be designed for low maintenance operation, low power consumption and small, unobtrusive packaging. The technology also must

perform despite the lack of traditional cell phone coverage in these regions and the isolated nature of river valleys surrounded by steep terrain. Fortunately, the demand for these measurements is such that any communications advances will be quickly incorporated, and more real-time high-altitude measurements will become available online in the future.

## Acknowledgments

Funding for this research was provided by Public Interest Energy Research (PIER) program, of the California Energy Commission. Additional funding during portions of this project was provided by the California Institute for Telecommunications and Information Technology (Cal-(IT)$^2$), the NOAA Office of Global Programs, the NSF ROADNet Information Technology Research Project and the Canon National Parks Foundation.

## References

1. Cayan, D. R., S. A. Kammerdiener, M. D. Dettinger, J. M. Caprio, and D. H. Peterson, 2001. Changes in the onset of spring in the Western United States. Bull. Am. Met. Soc., 82, 399-415.

2. Dettinger, M. D. and D. R. Cayan, 1995. Large-scale atmospheric forcing of recent trends toward early snowmelt runoff in California. J. Climate, 8, 606-623.

3. Peterson, D. H., R. E. Smith, M. D. Dettinger, D. R. Cayan, and L. Riddle, 2000: An organized signal in snowmelt runoff in the western United States. J. Am. Water Resour. Ass., 36, 421-432.

4. Reece, B. and E. Aguado, 1992. Accumulation and melt characteristics of Northeastern Sierra Nevada snowpacks. Managing water resources during global change: AWRA 28th annual conference and symposium: Reno, NV, Nov. 1-5, 1992, 631-640.

5. Roos, M., 1987. Possible changes in California snowmelt runoff patterns. Proceedings of the 4th Annual PACLIM Workshop, Pacific Grove, CA., 22-31.

6. Stewart, I.T., D.R. Cayan, M.D. Dettinger, 2002. Changes in Snowmelt Runoff Timing in Western North America under a "Business as Usual" Climate Change Scenario. Submitted to Climate Change 10/31/02.

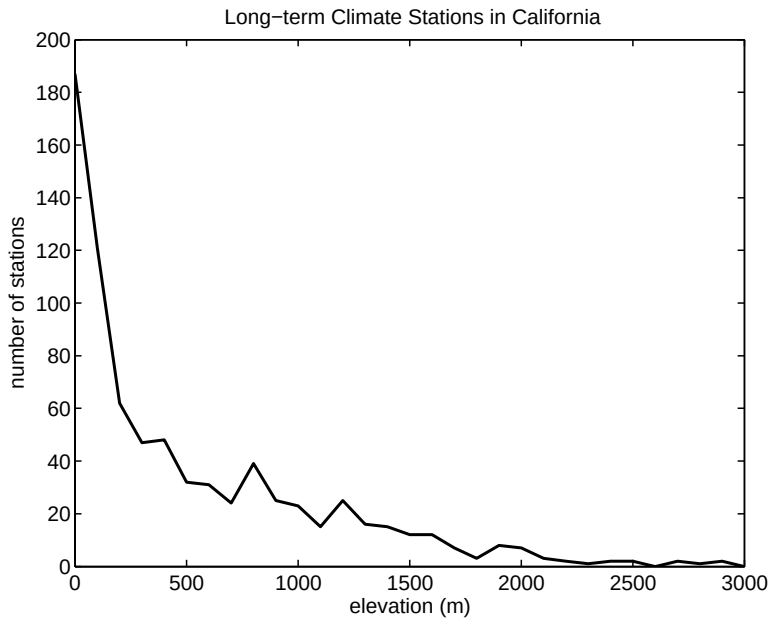


**Fig. 1.** Number of long-term climate stations in each 100 m elevation band in California. Only two stations, operated by the White Mountain Research Center, exist above 3000 m

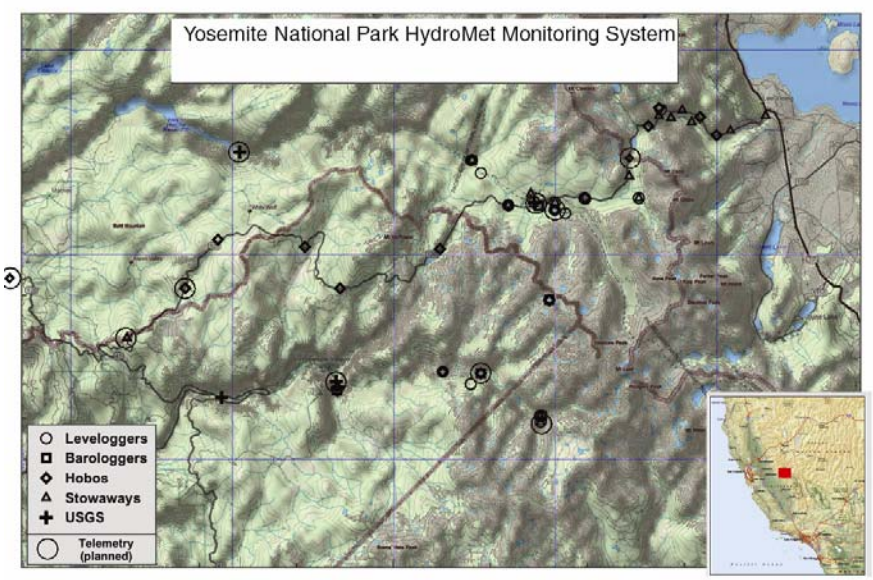


**Fig. 2.** Map of sensor locations in Yosemite National Park, as of September 2002. Sensors include water level and temperature (*circles*), stream chemistry (*crosses*), air pressure (*squares*), air temperature and humidity (*diamonds*), and air temperature alone (*triangles*). Circled stations have been approved by the National Park Service for telemetry

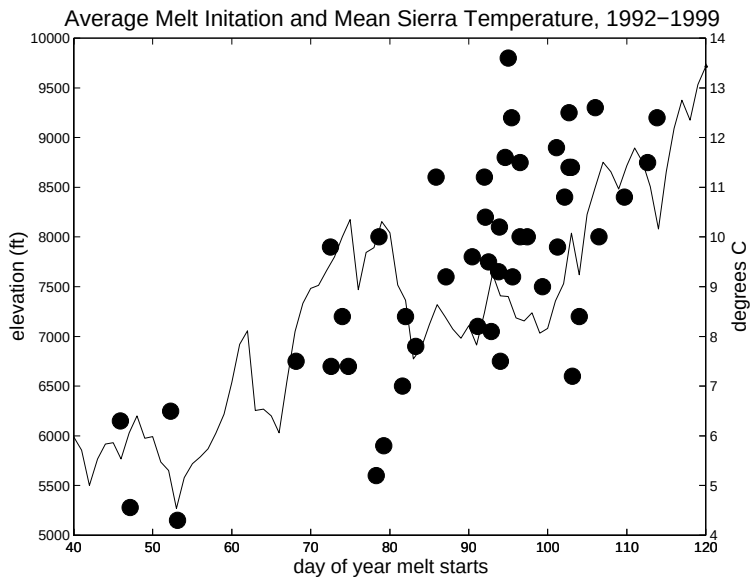


**Fig. 3.** A weighted average of mean temperatures at Nevada City, Tahoe City, Sacramento, and Hetch Hetchy (*line, right axis*) from 1992 to 1999 shows that, on average, temperature increases smoothly through the spring. Average days of maximum snow accumulation (*circles, left axis*) at 44 CDWR snowpillows over the same period show that higher elevations start melting later in the season, on average

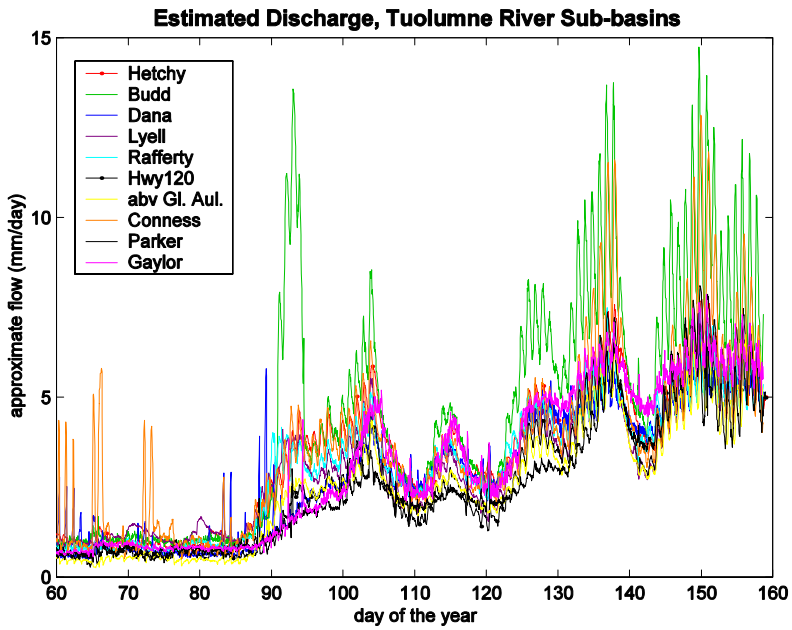


**Fig. 4.** Spring runoff began simultaneously in ten instrumented sub-basins of the Tuolumne River in Yosemite National Park in spring 2002

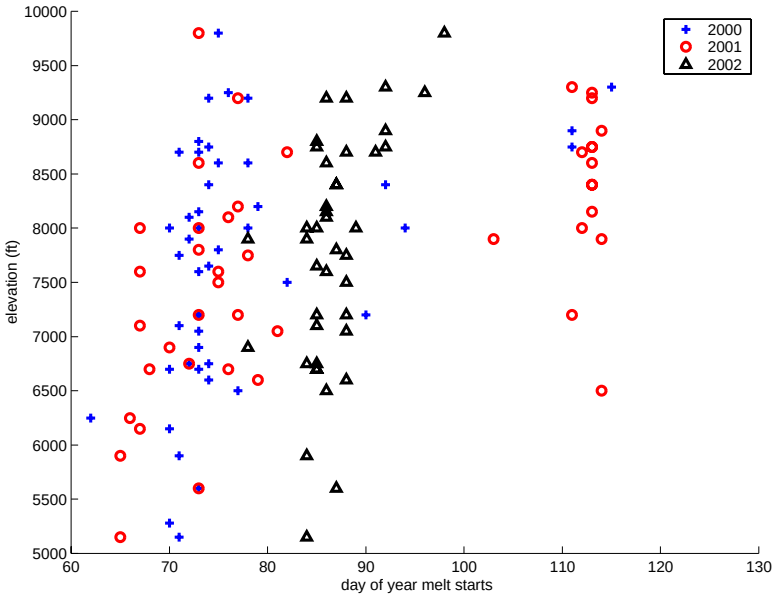


**Fig. 5.** The dates of maximum snow accumulation (shown here) and snowmelt initiation at 44 snow pillows in the Central Sierra were remarkably similar from elevation to elevation in spring 2002 (*triangles*). Similarly, in 2000 (*crosses*) and 2001 (*circles*), snow at most elevations began melting at the same time (before day 80, March 21st), but several stations at higher altitudes waited until weeks later

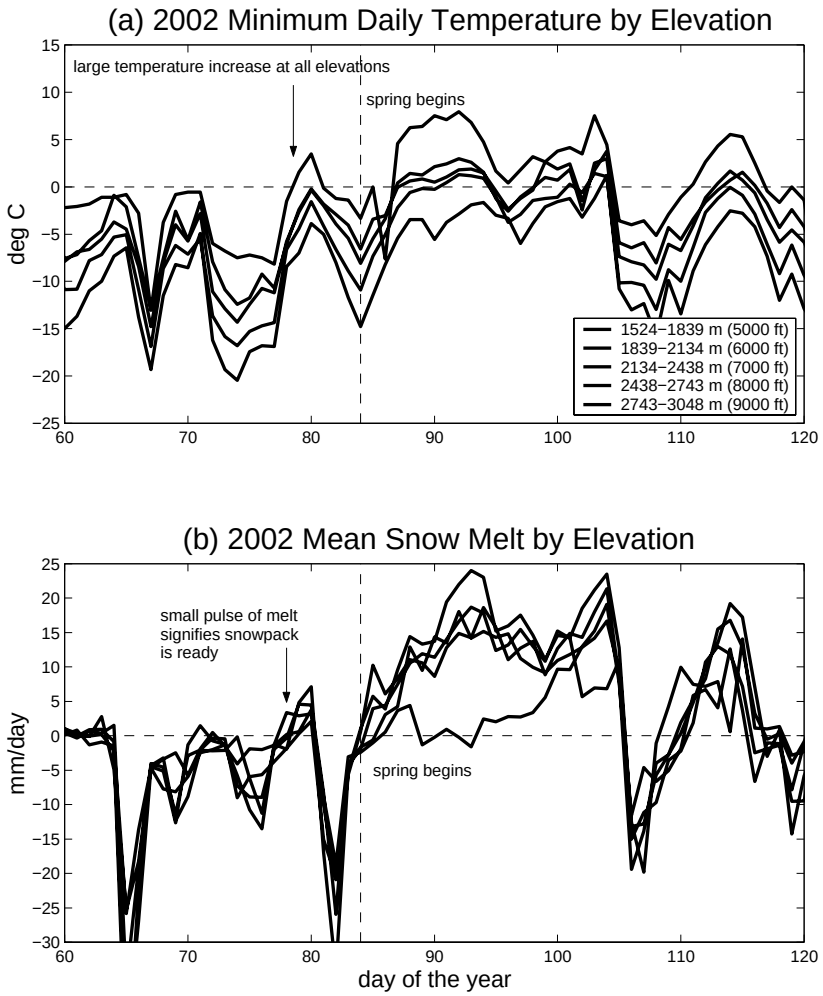


**Fig. 6.** Average temperatures (*a*) and snowmelt rates (*b*) by elevation for 44 snow pillows in the Central Sierra. In each graph, the top curve is the lowest elevation bin (1524 -1839 m, 5000 - 6000 ft) and the lowest curve is the highest elevation bin (2743 - 3048 m, 9000 - 10000 ft)

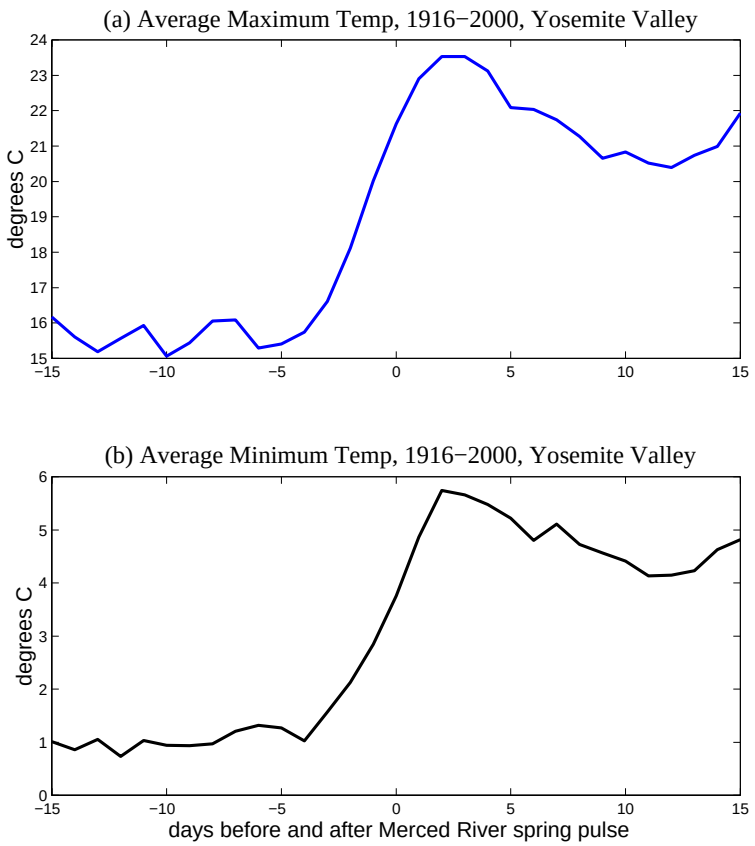


**Fig. 7.** Average maximum temperatures (*a*) and minimum temperatures (*b*) in Yosemite Valley, 1916-2000, for the 15 days before and after the start of spring runoff in the Merced River at Happy Isles

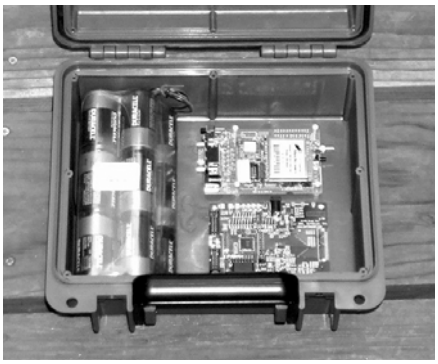

**Fig. 8.** View of interior of data logger being developed by Douglas Alden. Battery pack (to the left) provides power for data storage and transmission (electronics on right)