SIMPLE AND RELIABLE ACTIVE POWER FILTER FOR ENERGY EFFICIENCY AND POWER QUALITY

FEASIBILITY ANALYSIS AND FINAL EISG REPORT

Prepared For:
California Energy Commission
Energy Innovations Small Grant Program

Prepared By:
Keyue Ma Smedley
University of California, Irvine

May 2005
CEC-500-2005-086

ENERGY INNOVATIONS SMALL GRANT (EISG) PROGRAM

INDEPENDENT ASSESSMENT REPORT (IAR)

SIMPLE AND RELIABLE ACTIVE POWER FILTER FOR ENERGY EFFICIENCY AND POWER QUALITY

EISG AWARDEE
Dept. Of Electrical And Computer Engineering
University Of California Irvine
644 ET Tower
Irvine, CA 92697-2625
Phone: (949)824-6710
Email: smedley@uci.edu
Principal Investigator: Keyue Ma Smedley

AUTHOR
EISG Program Administrator

Grant #: 00-27
Grant Funding: $75,000
Term: Sep 2001 – March 2003
PIER Subject Area: Industrial/Agricultural/Water End Use Efficiency

LEGAL NOTICE

This report was prepared as a result of work sponsored by the California Energy Commission (Commission). It does not necessarily represent the views of the Commission, its employees, or the state of California. The Commission, the state of California, its employees, contractors, and subcontractors make no warranty, express or implied, and assume no legal liability for the information in this report; nor does any party represent that the use of this information will not infringe upon privately owned rights. This report has not been approved or disapproved by the Commission nor has the Commission passed upon the accuracy or adequacy of the information in this report.

PREFACE

The Public Interest Energy Research (PIER) Program supports public interest energy research and development that will help improve the quality of life in California by bringing environmentally safe, affordable and reliable energy services and products to the marketplace. The PIER Program, managed by the California Energy Commission (Commission), annually awards up to $62 million of which $2.4 million/year is allocated to the Energy Innovation Small Grant (EISG) Program for grants. The EISG Program is administered by the San Diego State University Foundation under contract to the California State University, which is under contract to the Commission.

The EISG Program conducts four solicitations a year and awards grants up to $75,000 for promising proof-of-concept energy research.
PIER funding efforts are focused on the following six RD&D program areas:

- Residential and Commercial Building End-Use Energy Efficiency
- Industrial/Agricultural/Water End-Use Energy Efficiency
- Renewable Energy Technologies
- Environmentally-Preferred Advanced Generation
- Energy-Related Environmental Research
- Energy Systems Integration

The EISG Program Administrator is required by contract to generate and deliver to the Commission an Independent Assessment Report (IAR) on all completed grant projects. The purpose of the IAR is to provide a concise summary and independent assessment of the grant project in order to provide the Commission and the general public with information that would assist in making follow-on funding decisions. The IAR is organized into the following sections:

- Introduction
- Objectives
- Outcomes (relative to objectives)
- Conclusions
- Recommendations
- Benefits to California
- Overall Technology Assessment
- Appendices
    - Appendix A: Final Report (under separate cover)
    - Appendix B: Awardee Rebuttal to Independent Assessment (Awardee option)

For more information on the EISG Program or to download a copy of the IAR, please visit the EISG program page on the Commission's Web site at:
http://www.energy.ca.gov/research/innovations
or contact the EISG Program Administrator at (619) 594-1049, or email at:
eisgp@energy.state.ca.us.
For more information on the overall PIER Program, please visit the Commission's Web site at http://www.energy.ca.gov/research/index.html.

.

Simple And Reliable Active Power Filter For Energy Efficiency And Power Quality

EISG Grant # 00-27

Awardee:	University of California, Irvine
Principal Investigator:	Keyue Ma Smedley
PI Contact Info:	Phone: (949)824-6710; Email: smedley@uci.edu
Grant Funding:	$75,000
Grant Term:	Sep 2001 – March 2003

Introduction

The electric utility grid generates, transmits, and distributes power with sinusoidal voltage waveforms. When currents flowing in the grid are sinusoidal and in phase with the voltages, the system operates at the highest efficiencies and transmits maximum power. Unfortunately, most electronic loads draw non-sinusoidal currents that introduce harmonics and reactive current into the utility grid. As electronic applications in industry, commerce, agriculture, and residences have increased in recent years, harmonics in the utility grid have become a very serious power-quality issue. Harmonics deteriorate energy efficiency, reduce power transmission capability by 30% or more, cause harmful power disturbances to other appliances on the grid, and lead to potential blackouts. This project focused on the improvement of energy transmission efficiency and power quality via harmonic-current reduction.

The techniques for remedying harmonics can be classified into two groups, passive and active. The passive method involves harmonic trapping using inductors and capacitors. These devices are usually large in size and susceptible to resonance. The active method, known as active power filtering (APF), is based on power electronics and automatic control technology. The advantages of APF include: consistent performance against variable parameters (i.e. no tuning or aging error); the damping of potential resonance; compensating harmonic and reactive power separately or together; and the performance of complex frequency processing not provided by passive filters. When applied to a line with 30% total harmonic distortion, a successful APF will result in the recovery of power transmission capability.

The PI proposed building a simple, reliable, and cost-effective APF based on one-cycle control (OCC). This method would eliminate the need of sensing three-phase load current, the nontrivial tasks of calculating harmonics and reactive current components, and the use of multipliers, as required by previous control methods. By applying one-cycle control and sensing the main-line current, this APF can realize unity power factor and low input current with a very simple circuit. The one-cycle control method also has the advantages of operating in constant frequency for reduced magnetic losses and of using space-vector mode for lowering switching losses. Figure 1 is a photograph of the finished device included to illustrate the scale of the task.

Objectives

The goal of this project was to determine the feasibility of a one-cycle-control, active-power filter to reduce transmission energy loss by 30% and to improve quality by achieving total harmonic distortion (THD)<5% in power lines. The researcher established the following project objectives:

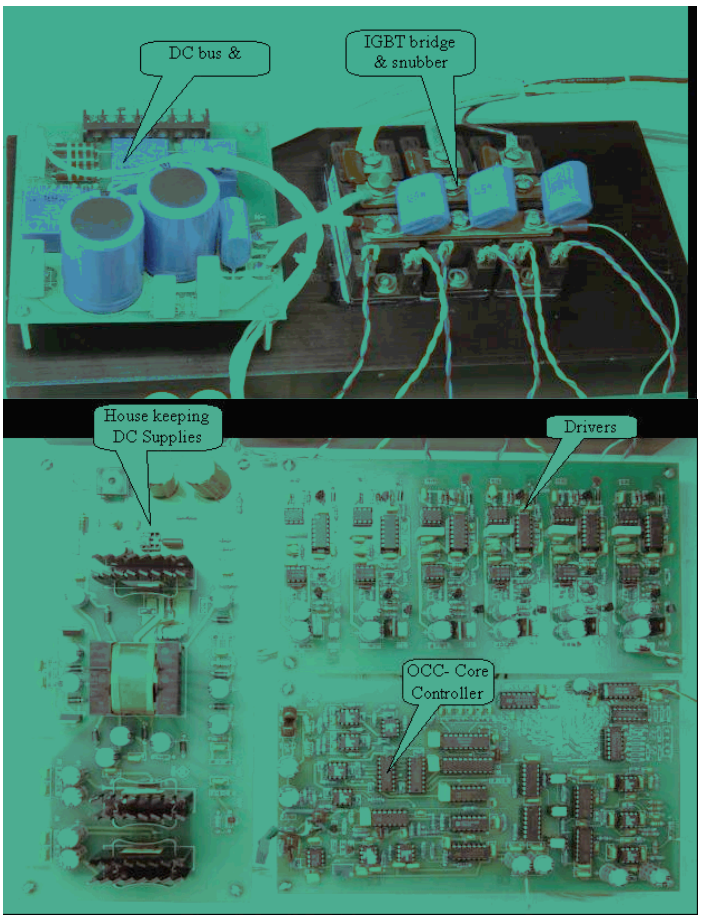

Figure 1. The illustrated 5 KVA Automatic Power Filter was designed, built and tested during the performance of this project. While carefully constructed, it is only a prototype so a device suitable for commercialization must still be built.

1. Fabricate and test a prototype one-cycle-control, active-power filter capable of 5 KVA.

2. Demonstrate capability to correct up to 30% THD and to maintain THD <5%.

3. Target manufacturing costs of less than $200/KVA.

Outcomes

1. The PI performed both dynamic analysis and steady-state analysis and design to achieve stable operation. Then he built, debugged, and optimized a prototype OCC-APF circuit featuring one-cycle control with a power capacity of 5 kVA. Dynamic experiments have shown excellent stability.

2. Steady-state tests have demonstrated that the OCC-APF can reduce the THD in the power line from 30% to less than 5% and to maintain it for a wide range of operation at an efficiency of 96%.

3. Cost analysis reflects parts count and 10,000-unit production.

Conclusions

1. This project designed and built an OCC-APF circuit that is capable of eliminating the harmonics in power-line currents. Its feasibility has been verified by the demonstrated stability and performance. The reliability, maintainability, and cost of the OCC-APF are superior to other proposed APF because of the significantly reduced part count.

2. With a demonstrated ability to correct line-current THD of 30% and maintain a low THD of less than 5%, the proposed OCC-APF provides an excellent solution to the problem of harmonic distortion in California and the US.

3. The PI is confident that the target cost of $200/KVA can be met, since the circuit is very simple.

This project demonstrated the feasibility of a one-cycle-control, active-power filter to reduce transmission energy loss by 30% and to improve power quality by achieving total harmonic distortion (THD)<5% in power lines. Preliminary cost estimates indicate that this device is economically feasible.

Recommendations

Based on the success of this research and development, the Program Administrator recommends:

1. Identification of a commercialization partner,

2. Development of a series of full-scale, pre-production, industrial OCC-APFs (10kW~1MW),

3. Field test of the full-scale industrial models.

After taking into consideration: (a) research findings in the grant project, (b) overall development status, and (c) relevance of the technology to California and the PIER program, the Program Administrator has determined that the proposed technology should be considered for follow-on funding within the PIER program.

Receiving follow-on funding ultimately depends upon: (a) availability of funds, (b) submission of a proposal in response to an invitation or solicitation, and (c) successful evaluation of the proposal.

Benefits to California

Public benefits derived from PIER research and development are assessed within the following context:

- Reduced environmental impacts of the California electricity supply or transmission or distribution system

- Increased public safety of the California electricity system

- Increased reliability of the California electricity system

- Increased affordability of electricity in California

The primary benefit to the ratepayer from this research is reduced environmental impacts of the California electricity supply, transmission, or distribution system. Assuming installation of the proposed devices in 50% of the users, the PI reports a total saving of 4.0×10^{15} Btu. The

potential environmental benefit is derived by reducing the air-borne emissions from the electric power industry in the United States (according to the statistics of 1999):

Sulfur dioxide (SO_2): 0.65 million tons

Nitrogen oxides (NO_X): 0.4 million tons

Carbon dioxide (CO_2): 125 million tons

According to reports from EPRI, Automated Research Corporation (ARC), Energy Information Administration (EIA) of DOE, and Manufacturing Energy Consumption Survey, (MECS), at least 10% of the total rated capacity of every electrical substation cannot be used due to reactive and harmonic current flow. The OCC-APF provides a solution by canceling the harmonics and reactive components in the line. At this time there are no devices installed comparable to OCC-APF, since previously proposed systems are too complicated to be reliable and cost effective.

The California Energy Commission reported in a recent study of California industries that the single most potent cause of end-user power-quality problems is voltage sags or swells; the second is harmonics; the third is grounding or wiring issues. Together these three problems account for more than 85% of the power-quality investigations conducted. The study also showed that California has the highest costs in the nation for both outages and power-quality phenomena, between $13.2 billion and $20.4 billion. While this study does not directly address the cost of harmonics (harmonic distortion), it does indicate that the OCC-APF can eliminate a major contributor to a very large and expensive power problem.

Overall Technology Transition Assessment

As the basis for this assessment, the Program Administrator reviewed the researcher's overall development effort, which includes all activities related to a coordinated development effort, not just the work performed with EISG grant funds.

Marketing/Connection to the Market

A company formed under the auspices of the principal investigator (PI) will pursue the development of a new product and market based on one-cycle control. The PI is the patent holder for the underlying technology. He plans to develop and test a complete power range of OCC-APF units in collaboration with utility companies with the goal of taking the product to market.

Engineering/Technical

This project demonstrated the feasibility of a 5 kVA one-cycle-control, active-power filter. Additional development and testing of devices with a range of capacities is required to bring the product to market. Since the technology is inherently scaleable, there should be no remaining feasibility issues.

Legal/Contractual

The Principal Investigator holds the fundamental patents on the one-cycle control methodology.

Environmental, Safety, Risk Assessments/ Quality Plans

The researcher has decided to delay the development of quality plans until a manufacturer has been identified. The manufacturer would develop the plans consistent with manufacturing procedures and processes at that location. Quality Plans include Reliability Analysis, Failure Mode Analysis, Manufacturability, Cost and Maintainability Analyses, Hazard Analysis, Coordinated Test Plan, and Product Safety and Environmental**.**

Production Readiness/Commercialization

The researcher demonstrated the feasibility of the OCC-APF. Although professionally packaged, the 5 kVA prototype device was considered to be a feasibility test article, not a pre-production prototype. The PI proposes to develop a series of full-scale pre-production prototypes ranging from10kW to 1000kW capacity. This task will require substantial resources of both labor and capital.

Appendix A: Final Report (under separate cover)

Appendix B: Awardee Rebuttal to Independent Assessment (none submitted)

Appendix A to FAR 00-27

ENERGY INNOVATIONS SMALL GRANT (EISG) PROGRAM

EISG FINAL REPORT

SIMPLE AND RELIABLE ACTIVE POWER FILTER FOR ENERGY EFFICIENCY AND POWER QUALITY

EISG AWARDEE
DEPT. OF ELECTRICAL AND COMPUTER ENGINEERING
UNIVERSITY OF CALIFORNIA IRVINE
644 ET Tower
Irvine, CA 92697-2625
Phone: (949)824-6710
Email: smedley@uci.edu

AUTHORS
Keyue Ma Smedley, Principal Investigator

Grant #: 52100A/00-27
Grant Funding: $75,000
Term: September 2001 – March 2003
PIER Subject Area: Industrial/Agriculture/Water
End-Use Efficiency & Building End-Use Efficiency

Legal Notice

This report was prepared as a result of work sponsored by the California Energy Commission (Commission). It does not necessarily represent the views of the Commission, its employees, or the State of California. The Commission, the State of California, its employees, contractors, and subcontractors make no warranty, express or implied, and assume no legal liability for the information in this report; nor does any party represent that the use of this information will not infringe upon privately owned rights. This report has not been approved or disapproved by the Commission nor has the Commission passed upon the accuracy or adequacy of the information in this report.

Inquiries related to this final report should be directed to the Awardee (see contact information on cover page) or the EISG Program Administrator at (619) 594-1049 or email eisgp@energy.state.ca.us.

Table of Contents

Abstract 1
Executive Summary 2
Introduction 5
Project Objectives 7
Project Approach 8
Project Outcomes 8
Conclusions 18
Recommendations 18
Public Benefits to California 19
Development Stage Assessment 20
References 20
Appendix ..... **Error! Bookmark not defined.**

List of Figures

Fig.1 Current waveforms and their spectrum of typical nonlinear loads…… 5

Fig.2 The diagram of the three-phase APF with one cycle controller…… 7

Fig.3 The diagram of the OCC-APF…… 9

Fig.4 OCC-APF Operation Flow Chart…….. 10

Fig.5 OCC-APF Status Chart…….. …… 10

Fig.6 PCB layout & Photos of constructed circuits…….. …… 12

Fig.7 Experimental Test diagram of developed OCC-APF…….. …… 13

Fig.8 Synchronized Clock series of the OCC control core…….. …… 14

Fig.9 Integrator output triangle signals in open-loop (left) & closed-loop operation…… 14

Fig.10 Gate drive signals of the main bridge (Phase A) …….. …… 14

Fig.11 Voltage & current waveforms and current spectrum in load branch (Phase A) …… 15

Fig.12 Voltage & current waveforms and current spectrum in source branch (Phase A) … 15

Fig.13 Source voltage & APF output current waveforms and current spectrum (Phase A)… 15

Fig.14 Start up transient waveforms of the branches of source /APF (Phase A) …… 16

Fig.15 Start dynamical waveforms of three-phase source currents, DC bus voltage …… 17

Fig.16 Dynamical waveforms as the load changed from 50% to 100% power …… 17

Fig.17 Main circuit, conjunction & sensors of OCC-APF…….. …… 22

Fig.18 Drive circuit with optical isolation & real-time over current protection…….. …… 23

Fig.19 OCC-core circuit including integrator, clock, feedback filters, region generator…… 24

Fig.20 Auxiliary control circuit…….. …… 25

Fig.21 House keeping circuit (9-groups independent DC power supplies) …….. …… 26

List of Tables

Table.1 Measured data the currents & THD of load, source & APF branches (phase A) … 16

Table.2 The main industries & typical equipment related problems of energy quality. …… 19

Table.3 Development Assessment Matrix…… 20

Abstract

The harmonics problem has become more and more serious as the usage of non-linear loads increases in industry, commercial, agriculture, and residential fields. It reduces the transmission capacity and efficiency, causes transformer overheating, and disturbs other appliances.

Active power filters are recognized as one of most promising technologies to suppress harmonic currents in the power lines. Many Active power filter circuits have been reported recent years. However, most of them are complex, high cost, and low reliability, which prevents them from commercialization.

With the proposed One-Cycle Control method, a prototype active power filter (OCC-APF) has been developed with power capacity of 5kVA. A series rigorous experiments have demonstrated that the OCC-APF is capable of correcting the line current THD (Total Harmonic Distortion) from 30% to 5%. This OCC APF has excellent stability and reliability. The energy efficiency is about 96% itself. Through the development of this bench-scale prototype, the low cost objective is also achieved and the estimated volume cost is about $200/kVA.

The developed technology provides an excellent solution for power quality control and efficient energy use. Commercialization of this technology shall bring a profound impact on the economy and the environment.

Executive Summary

1. Introduction

The harmonics problem has become more and more serious as the usage of non-linear loads increases in industry, commercial, agriculture, and residential fields. It reduces the transmission capacity and efficiency, causes transformer overheating, and disturbs other appliances.

Active power filters are recognized as one of most promising technologies to suppress harmonic currents in the power lines. Many Active power filter circuits have been reported recent years. However, most of them are complex, high cost, and low reliability, which prevents them from commercialization.

The aim of this his project was to demonstrate the simplicity, reliability, and feasibility of the one cycle control APF (OCC-APF) by developing a three-phase 5 kVA prototype.

2. Project Objectives

Following objectives have been achieved.

- Fabricate a prototype active power filter capable of 5 kVA.
- Demonstrate an active power filter capable of one-cycle control
- Demonstrate capability to correct up 30% THD
- Demonstrate capability to maintain THD to <5%
- Conduct the measurement for dynamical performance of the prototype
- Targeted capital cost of proposed power filter $200/kVA.

3. Project Approach

Following tasks were performed to achieve the objectives.

- Task 1: Build a prototype of three-phase active power filter.
- Task 1.1: Perform steady state analysis and design
- Task 1.2: Perform dynamic analysis for stable operation
- Task 1.3: Circuit construction
- Task 1.4: Circuit debugging and optimization
- Task 2: Develop a test plan and deliver to EISG Program Administrator for approval.
- Task 3: Conduct performance tests on prototype power filter.
- Task 4: Perform reporting requirements (Progress Report and Final Report).

4. Project Outcomes

a). Design & fabricate the prototype

A prototype OCC-APF of 5KV has been designed. The design details of function block, schematic circuits, and PCB layouts are provided in detail. The major parameters of the designed prototype are shown as following:

- Voltage rating: 115v/60Hz, 3-phase
- Load rating: 5kVA nonlinear load;
- Load current THD: 30% ~80%;
- DC bus voltage: 350~450V(protected at <250V or >600V);;
- Switching frequency: 20~50kHz (changeable according prototype test);
- Switcher rating: 30A/600V, MOSFET or 75A/600V IGBT module
- Isolation: 20MHz wideband opto-coupler with 2500V isolation voltage;
- Source Current Residual THD: 5% (at full and most load condition);
- Full protection, Fan cooling, Suitcase enclosure.

b). Demonstration of steady state performance

A series of rigid tests were conducted in steady state to evaluate the capability of one-cycle control for active power filter and the stability of the designed system. The designed OCC-APF prototype was tested at rated 5 kW load power and the THD was measured below 5%.

c). Demonstration of the dynamic performance

Two types of dynamic situations commonly seen in practice were studied: the start-up transient and the load step-up transient. It was found that the system has quick transient response (~1 line cycle) and low overshoot, which is important for the OCC-APF to be commercialized.

d). Efficiency

The efficiency of the prototype was measure as high as 96% itself.

e). Estimated commercial cost

Through the development of this bench-scale prototype, low cost objective is also verified $200/kVA for volume production.

5. Conclusions

Based on the OCC theory, a prototype APF with power capacity of 5 kVA has been fabricated. Steady state tests demonstrate that the OCC-APF has the capability of improve the line current THD (Total Harmonic Distortion) from 30% to 5%. Dynamic experiments show that this OCC APF has excellent stability. The OCC-APF has an efficiency of 96% itself. Through the development of this bench-scale prototype, low cost objective is also verified to $200/kVA for commercial produce of this type OCC APF, if the components are purchased in the volume of 10,000 or more.

The prototype complies with the all the proposed objectives and is proven to be a promising candidate to be commercialized for harmonic elimination in the commercial, residential and industrial environments.

6. Recommendations

Based on the success of this research and development, it is recommended

(1) To develop a series of full-scale pre-industrial OCC-APFs (10kW~1MW)
(2) To put the full scale industrial models into field demonstration;
(3) To commercialize the developed OCC-APF technology.

7. Public Benefits to California

According to the report from EPRI, ARC (Automated Research Corporation), EIA (Energy Information Administration) of DOE, and MECS (Manufacturing Energy Consumption Survey), at least 10~20% of the total electrical power rating of every electrical substation were not used due to the reactive and harmonic current flow. The energy loss associate with this reactive and harmonic power is about $8.0*10^{15}$ Btu or $7.6*10^{11}$ kilowatt-hours (10% of the domestic electrical energy consumption, 1997).

The developed technology has demonstrated its ability to reduce the total harmonic distortion in the power line from 30% to below 5%. . The potential overall energy savings after installing the proposed devices in 50% of substations in united states could be up to $4.0*10^{15}$ Btu or $3.8*10^{11}$ kilowatt-hours.

The energy benefit is very significant and so is the environmental impact thanks to the reduced power generation/pollutence emission. Furthermore the proposed technology when deployed will generate a huge market, which directly impacts our national economy.

Introduction

Our current power system, the utility grid, generates, transmits, and distributes power with sinusoidal voltage waveforms. When currents flowing in the grid are sinusoidal and in phase with the voltages, the power system operates at the highest efficiencies and features the maximum power handling capability. Unfortunately, most electronic loads draw nonsinusoidal currents that introduce harmonics and reactive current into the utility grid. In recent years, as the applications of electronic equipment in industry, commercial, agriculture, and residential fields increase, harmonics in the utility grid have become a very serious power quality issue, which deteriorate the energy efficiency, reduce the power transmission capability, and cause harmful pollution to other appliances in the grid. The research work reported herein is related to the improvement of energy efficiency and power quality via harmonic current reduction, which is an important focus area of the EISG program.

- **The harmonics problem & its harms**

Fig.1 (a) and (b) show some current waveforms of typical nonlinear loads, such as voltage-type and current-type rectifiers, measured in the real industrial environment. The THD (Total Harmonic Distortion) is about 70% and 30% for fig.1 (a) and (b) respectively.

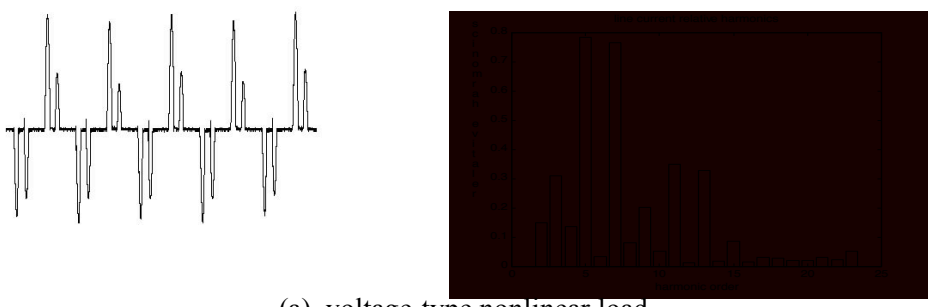

(a) voltage-type nonlinear load

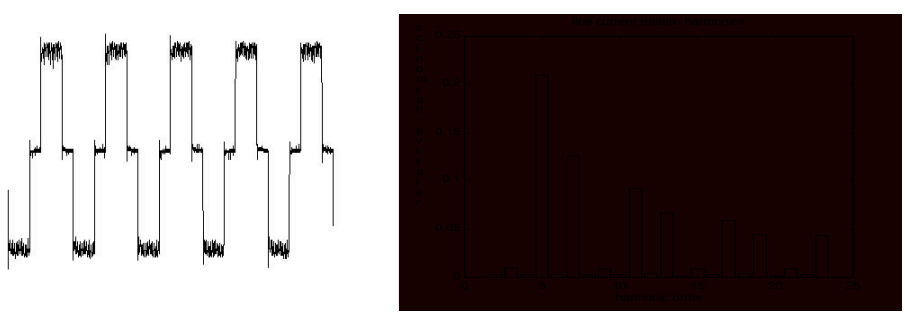

(b) current-type nonlinear load

Figure 1 Current waveforms and their spectrum of typical nonlinear loads

The existence of the harmonic and reactive current is harmful to the power system itself and also to the other equipment in the neighborhood. The evidences are included below:

1. Reducing the power handling capability of the power system because of the delivery of harmonic & reactive current;
2. Increasing the level & accelerating aging of the insulation due to the elevated peak current;
3. Lowering the energy efficiency because of the additional copper loss on the transmission line & equipment;
4. Decreasing the PF (Power Factor) for harmonics contribute reactive power flow;

5. Disturbing the neighborhood equipment with distorted voltage and EMI, and causing additional heat loss,
6. Dangerous to the safety of protection device & therefore of the whole power system.

- **Technologies for Harmonic Treatment**

The techniques for remedying harmonics can be classified into two groups, passive and active ones. The passive method involves inductor and capacitor harmonic trapping, which is usually large in size and is susceptible to resonance. The active method is known as active power filtering (APF) based on power electronics and automatic control technology. The advantages of APF include consistent performance against variable parameters (i.e. no tuning or aging error), damping potential resonance, compensating harmonic and reactive power separately/together, and ability of complex frequency processing as compared with passive ones.

There are many reported topologies of APF in the recent years. Basically, they are parallel /shunt APF [1], series APF [2], and shunt plus series APF [3]. Among them, the shunt APF is the basic configuration. A shunt APF is a device that is connected in parallel to and cancels the harmonic and reactive currents from a group of nonlinear loads so that the resulting total current drawn from the AC main is sinusoidal. Ideally, the APF needs to generate just enough reactive and harmonic current to compensate the nonlinear loads in the line, thus it handles only a fraction of the total power to the load.

A typical three-phase shunt APF is composed of a three-phase voltage source converter (VSC) and control circuitry. Most previously reported control approaches need to sense the input voltage, the load current and then calculate the harmonics and reactive components in the load in order to generate the reference for controlling the voltage source converter. In addition, *d-q* conversion is needed in the control unit. Those control methods require fast and real-time calculation so that a high-speed digital microprocessor and high performance A/D converters are necessary, which yields high cost, complexity and low stability. Many articles have been published that focus on obtaining the current reference for three phase or single phase APF[4~6].

Some indirect control methods were reported which sense the line current and force it to follow the line voltage[7~9]. In these methods, calculation of the current reference is no longer necessary, which greatly simplifies the control circuitry. However precision multipliers are still required to measure the current according to the load level.

In this proposal, the PI proposed to build a simple, reliable and cost effective APF based on one-cycle control[10][11]. This method eliminates the need of sensing the three-phase load current, the nontrivial task of calculating the harmonics and reactive current components, as well as the use of any multipliers, as required by previously reported control methods. By applying one-cycle control and sensing the mains line current, unity power factor and low input current distortion can be realized by one integrator with reset along with a few linear and logic components such as flip-flops, comparators, and clock. It also has the advantages of operating in constant frequency for reduced magnetic losses and using space-vector mode for lowering the switching losses.

The three-phase 5 kVA prototype of APF built by this project is based on the one-cycle control (OCC) method.

- **Diagram of three-phase OCC APF [11]**

Fig.2 shows the proposed three-phase OCC active power filter with one-cycle control in vector operation mode. The bridge inverter form the power train forms the power train of the active power filter, which is in parallel to the nonlinear load. The controller is comprised of a region selection circuit that divides the line cycle into six regions using the line voltage zero crossing information, a current signal selector that uses analog switches to direct two non-dominant phase currents out of three to the One-Cycle Control core, an One-Cycle Control core that calculates the necessary duty ratios for the switches according to the control low, a logic block that directs the duty ratio signals to the appropriate drivers for the switches, and a voltage loop compensator that compares the dc bus voltage with a reference to regulate the dc bus voltage to a desired range.

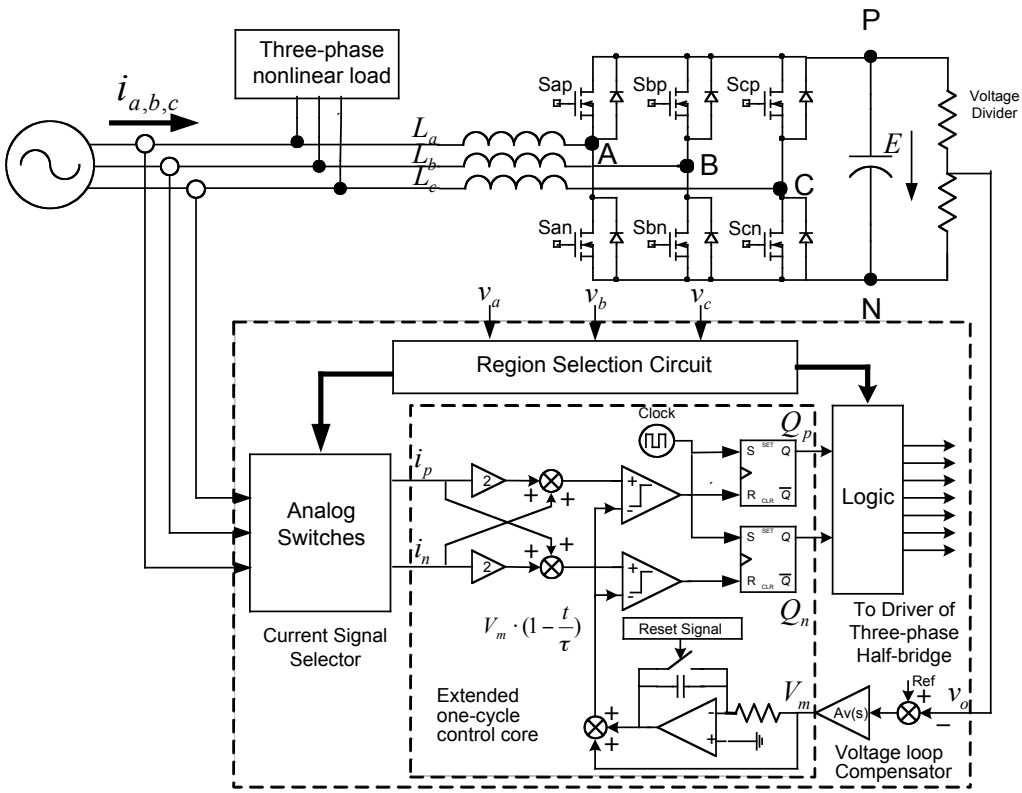

Figure 2 The diagram of the three-phase APF with one cycle controller

For detail illustration of OCC APF principle, please see reference [11] & progress report 1 (Appendix III).

Project Objectives

- Fabricate a prototype active power filter capable of 5 KVA.
- Demonstrate an active power filter capable of one-cycle control
- Demonstrate capability to correct up 30% THD
- Demonstrate capability to maintain THD to <5%
- Conduct the measurement for dynamical performance of the prototype
- Targeted capital cost of proposed power filter $200/KVA.

Project Approach

- Task 1: Build a prototype of three-phase active power filter.
- Task 1.1: Perform steady state analysis and design
- Task 1.2: Perform dynamic analysis for stable operation
- Task 1.3: Circuit construction
- Task 1.4: Circuit debugging and optimization
- Task 2: Develop a test plan and deliver to EISG Program Administrator for approval.
- Task 3: Conduct performance tests on prototype power filter.
- Task 4: Perform reporting requirements (Progress Report and Final Report).

Project Outcomes

- **Objective 1: Design & Fabricate the prototype active power filter capable of 5 KVA**.

Major design parameters are shown as following:

- Voltage rating: 115V/60Hz, 3-phase
- Load rating: 5kVA nonlinear load;
- Load current THD: 30% ~80%;
- DC bus voltage: 350~450V(protected at <250V or >600V);;
- Switching frequency: 20~50kHz (changeable according prototype test);
- Switcher rating: 30A/600V, MOSFET or 75A/600V IGBT module
- Isolation: 20MHz wideband opto-coupler with 2500V isolation voltage;
- Source Current Residual THD: 5% (at full and most load condition);
- Full protection, Fan cooling, and Suitcase enclosure.

The blocks of the designed One Cycle Controlled (OCC) Active Power Filter (APF) is shown as fig.3.

The proposed active power filter consists of a voltage source converter, a ripple filter, an EMI filter controller, a driver circuitry, several DC housekeeping power supplies, and a protection circuitry, a connection block etc.

The voltage source converter is connected in parallel with the nonlinear load and operates at high switching frequency with the control of OCC method so that the outline of the utility line current following the line voltage waveform. Therefore, realizes the function of harmonic suppression in the utility lines.

The switching ripple filter is used to reduce the switching ripple.

The EMI filter is used to attenuate switching frequency harmonics in order to meet the related standards of electrical-magnetic interface.

The controller contains the OCC core for solve the control key equations with a signal router that directs the source current, voltage, and the DC bus voltage to the right ports.

The diver circuit transfers the trigger signals to the power stage. The opto-isolation provides the electrical isolation between line power and the control power and prevents reverse current conduction.

The housekeeping block produces the necessary DC power supplies for the controller and all the drivers.

The protection block that has the function of over-current, heat, voltage and low-voltage protection.

The connection block provides the convenience for installation and operation of this system.

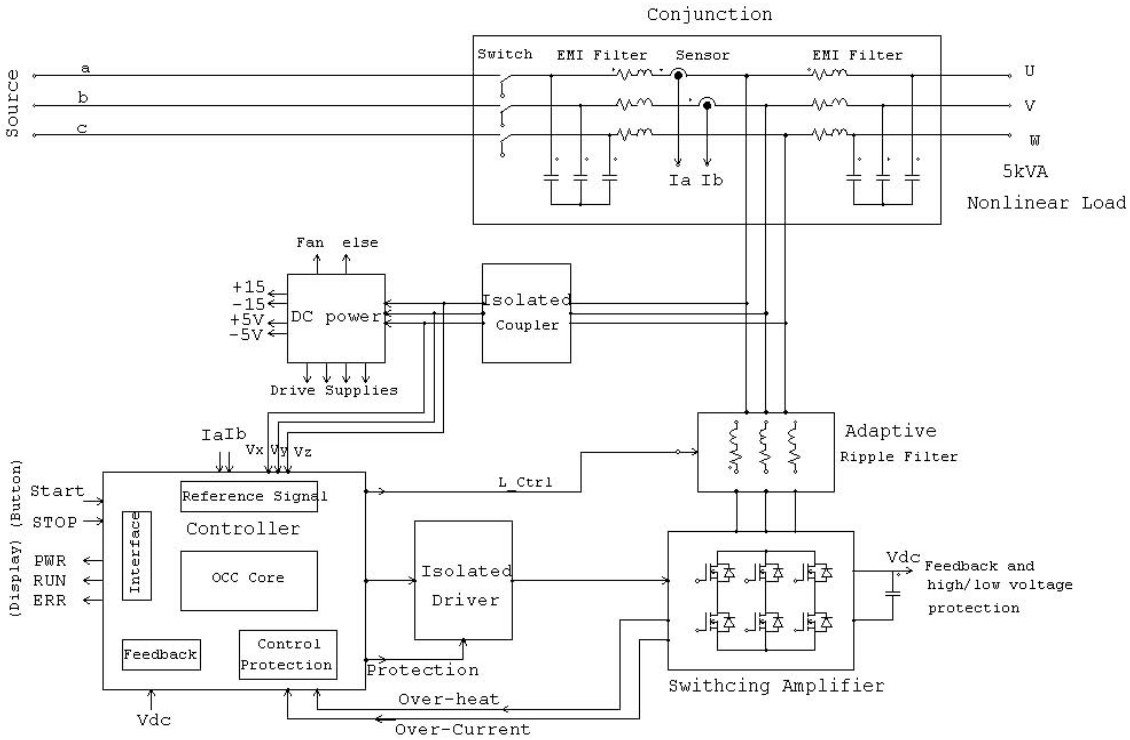

Figure 3 The diagram of the OCC-APF

Operation flow chart & status chart

The operation procedures of the designed OCC-APF prototype are illustrated by a flow chat in Fig.4 and Fig.5 respectively.

Figure 4 OCC-APF Operation Flow Chart

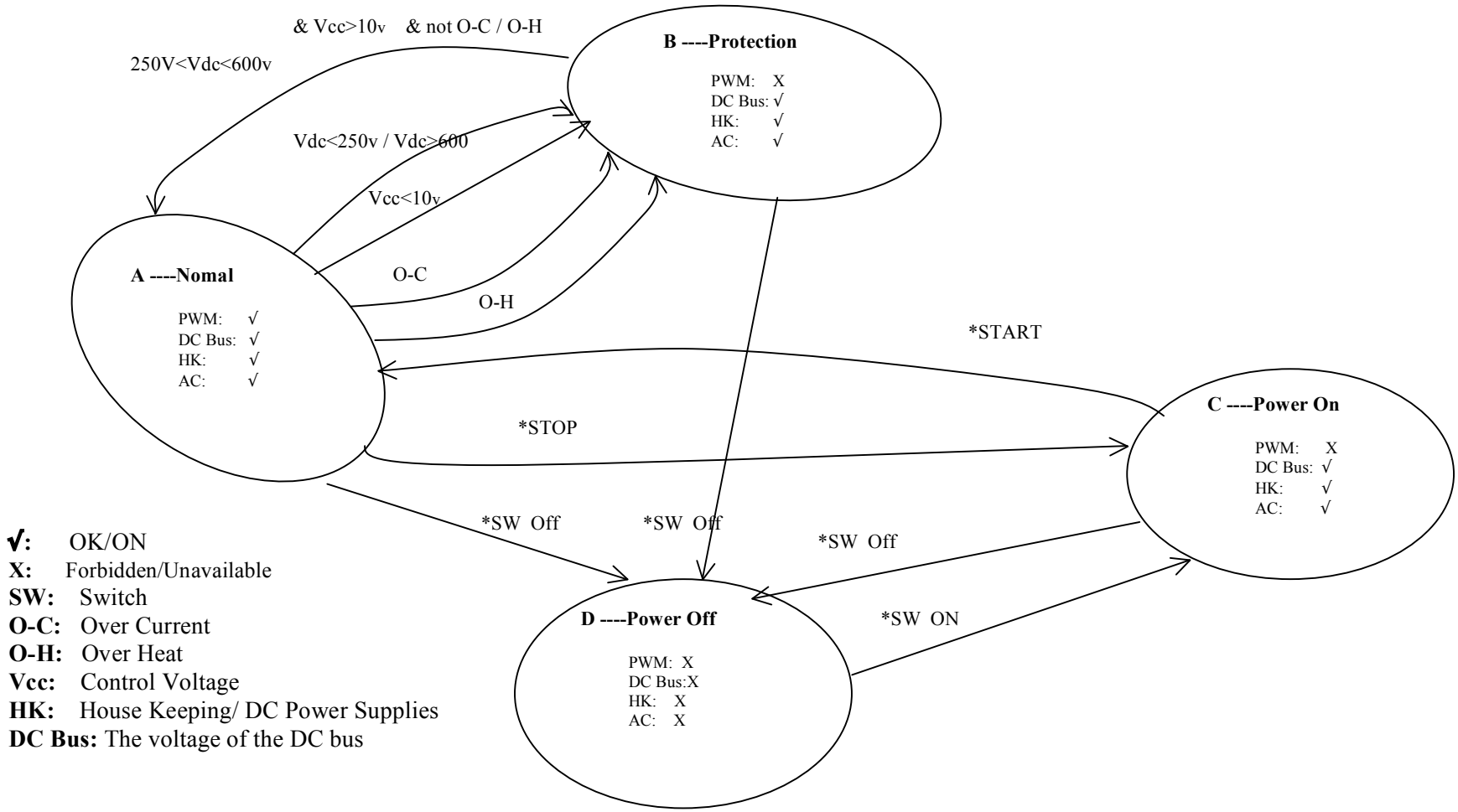

Figure 5 OCC-APF Status Chart

Schematic circuits design

The schematic circuits are shown in Appendix IV. There are voltage source converters, ripple filter, EMI filter, controller, driver circuitry, several DC housekeeping power supplies, and protection circuitry, connection block etc.

The main circuit, Shown in Fig.5, consists of a voltage source converter (the three-phase IGBT/MOSFET Bridge), DC capacitors, line current and DC voltage sensors, and conjunction block etc. It is the power part in the designed system. It also provides the signals of the heat-sink temperature and the main grid voltage. The main circuit is the executing part to implement the harmonics suppression with the control of the OCC-core.

The drive circuit shown in Fig.6 includes six identical drivers for the six IGBT/MOSFETS in the three-phase bridge. Each driver has a current amplifier to drive the power switches (IGBT/MOSFET) and optical coupler with a 20MHZ bandwidth and 2500 volts isolation. To protect the system in real-time against over current, each driver has a direct shut-off by the detected on-voltage across the switches that turns off the switch in about 6 us when the current is over the limit.

As the OCC principle, Fig.7 gives the schematic circuit of the OCC core. The zero crossing signals detected from the line voltages divides each line cycle into six regions. A timer chip is used to produce the clock which resets the integrator and provide synchronized signal. Some filters are adopted to eliminate noise of the input signals. The feedback main current is used to generate the PWM of the three-phase bridge according to the OCC control method mentioned above.

The auxiliary control circuit, shown in Fig.8 provides a friendly in-/out- port of the operation. It consists of a Stop/Start buttons, DC bus low and high voltage protection, over thermal protection, dynamical procedure protection etc.

The housing keeping is designed to provide nine groups of independent DC power supplies as shown in Fig.9. Among them, four 15Vdc of them are used for the six drive circuits, two ±18Vdc used for OCC-core & auxiliary control, two ±8Vdc used for isolated cycle region generator, one 24Vdc for cooling fan supply. These supplies are realized with TOP-switch technology.

PCB layouts & practical circuits

PCB layout is one of key factors leading to the success of power electronics circuits. The project prototype has four PCBs in all. All the PCBs were performed with taking consideration of some power electronics principles/rules, including that of,

- Current density,
- Voltage insulation,
- Shortest loop length,
- Smallest loop areas,
- Systemic optimization,
- Minimizing EMI,
- Maximizing thermal dissipation,
- Convenience for operation, measurement & debugging,
- Factors of mechanics, appearance & cost, etc

The PCB layouts and practical constructed circuits are shown in fig. 6.

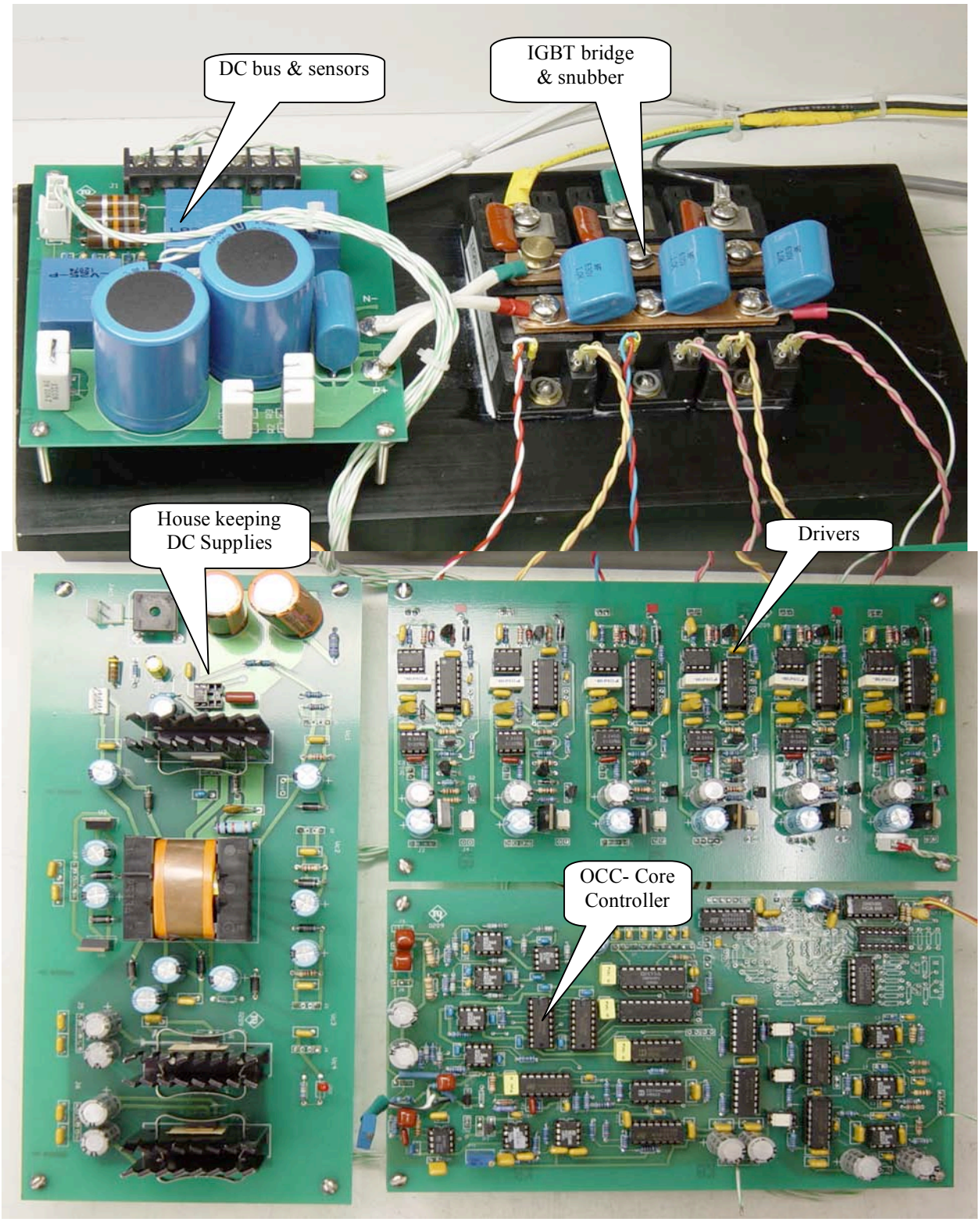

Figure 6 PCB layout & Photos of constructed circuits

- Objective 2~4: Demonstrate an active power filter capable of one-cycle control & the capability of THD suppression----(steady state performance)

All tests were performed on the developed APF with an experimental setup shown in fig.7.

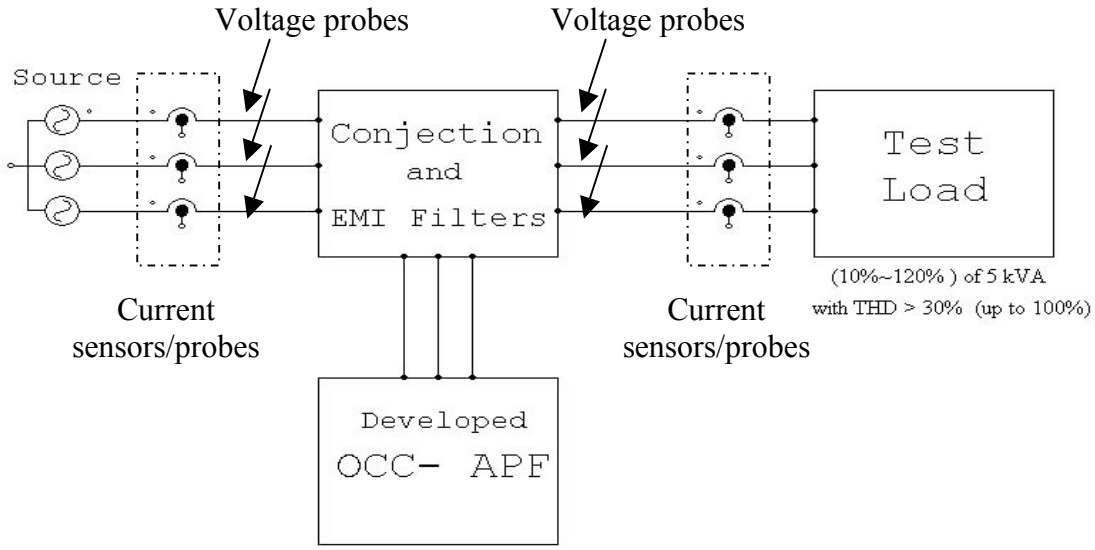

Figure 7 Experimental Test diagram for the developed OCC-APF

The project test concludes power rating, THD (total harmonic distortion), steady state operating, dynamic test, and efficiency test etc.

The test conditions are listed below,

- APF mode;
- Input phase voltage 120 Vac rms;
- Load Power Rating 10~100% of 5 kW (80~15Ω at 200~278Vdc)
- THD of the load current ~ 30%;
- Switching frequency 23.78 kHz;
- All bandwidths of test sensors and probes are above 100 kHZ, ie. More than twice of the switching frequency and much higher than the highest harmonic frequency.
- The waveforms recorded with TDS3032B and/or TDS3014B oscilloscopes, which have 100/300 MHZ bandwidth and 9-bit accuracy.
- The spectrums were gotten with the FFT analyzer of the TDS3202/3014 oscilloscopes.

Fig.8~fig.10 are some important waveforms of controller to demonstrate the capable of active power filter (APF) with OCC method. The measured parameters of are also shown in the figures respectively.

From fig.8~fig.9 it can be seen: the clocks and the integration signal of the OCC controller are stable and showing the desired manners. Fig.10 shows that the switches of the APF can operate normally according to the OCC-controller commands without large EMI appearing.

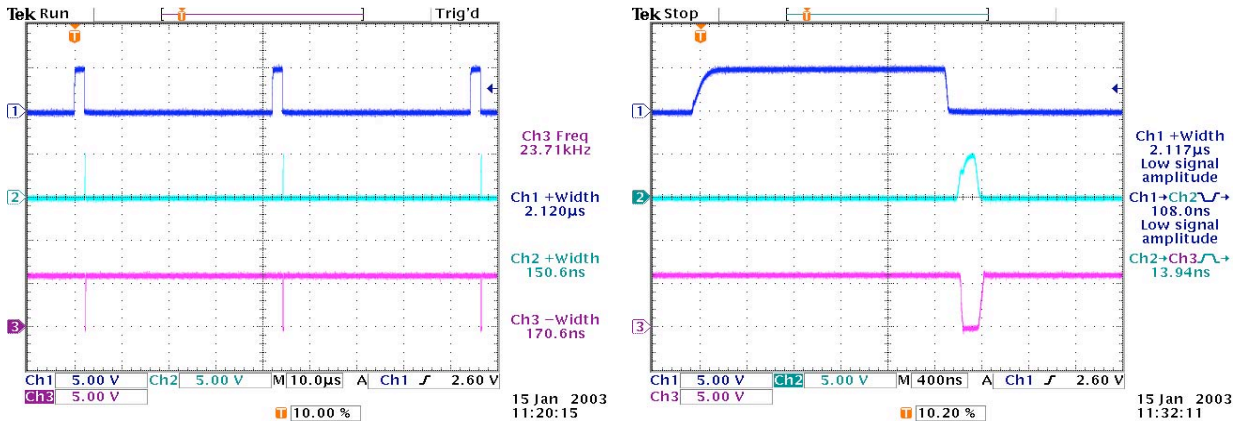

Figure 8 Synchronized Clock series of the OCC control core

From up to bottom: Maximum duration protect signal, main clock, and inverted main clock

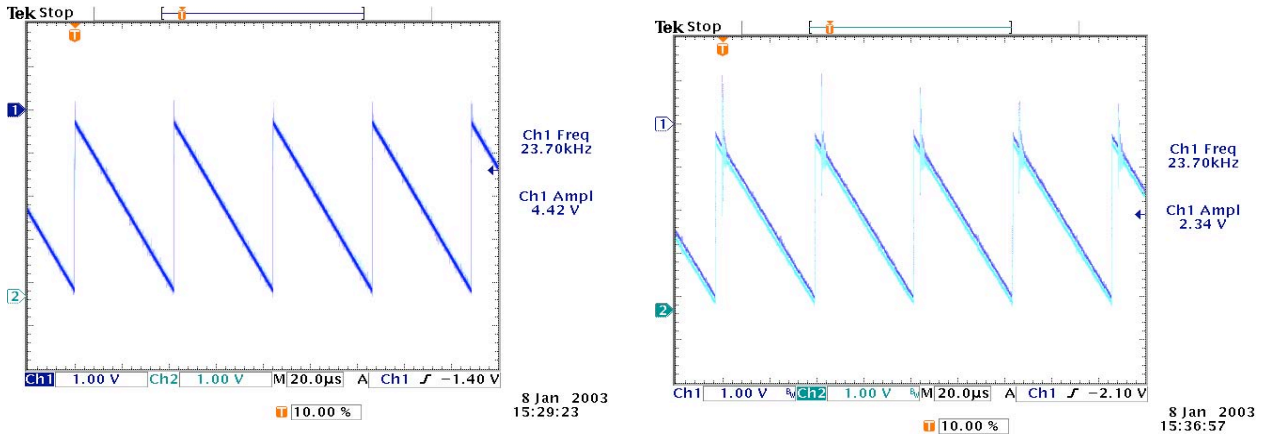

Figure 9 Integrator output triangle signals in open-loop (left) & closed-loop operation (right)

(Ch1: negative integrated waveform; Ch2: positive integrated waveform)

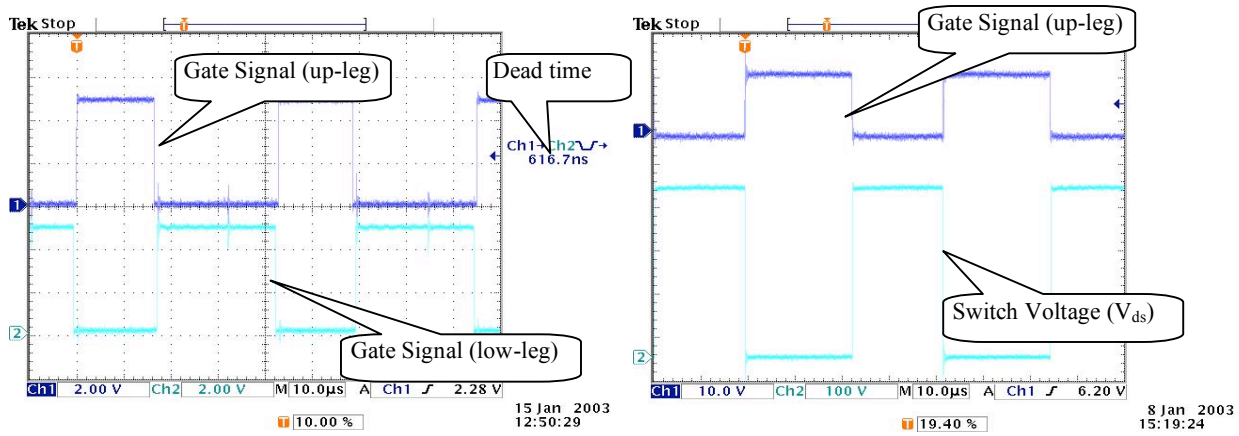

Figure 10 Left: Gate drive signals of up-leg (up) & low-leg (Low) of the main bridge (Phase A) Right: Gate drive signals (up) & switch voltage (low, V_{DS}) (up-leg of Phase A)

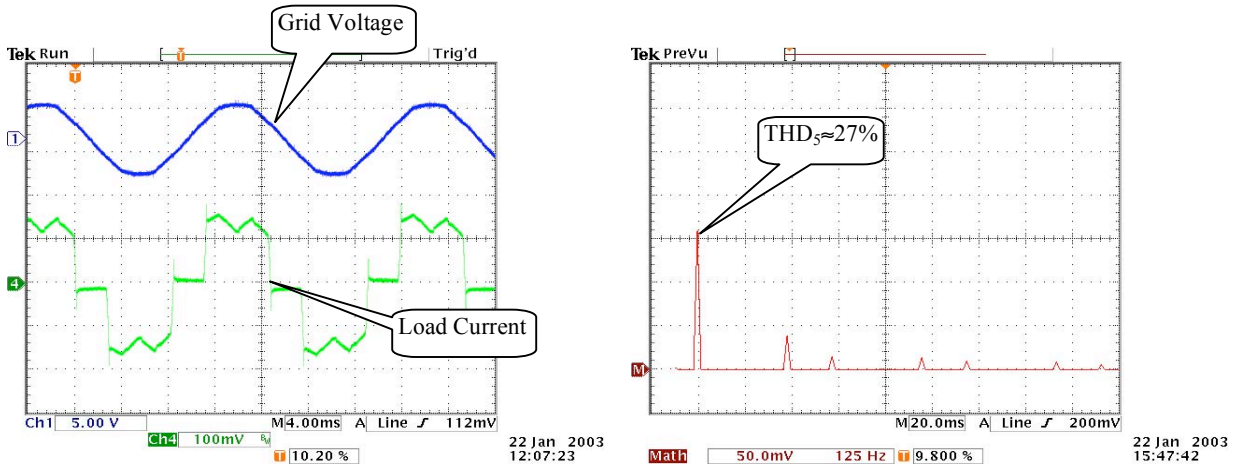

Figure 11 Voltage (up) & current (Low) waveforms and current spectrum in load branch (Phase A)

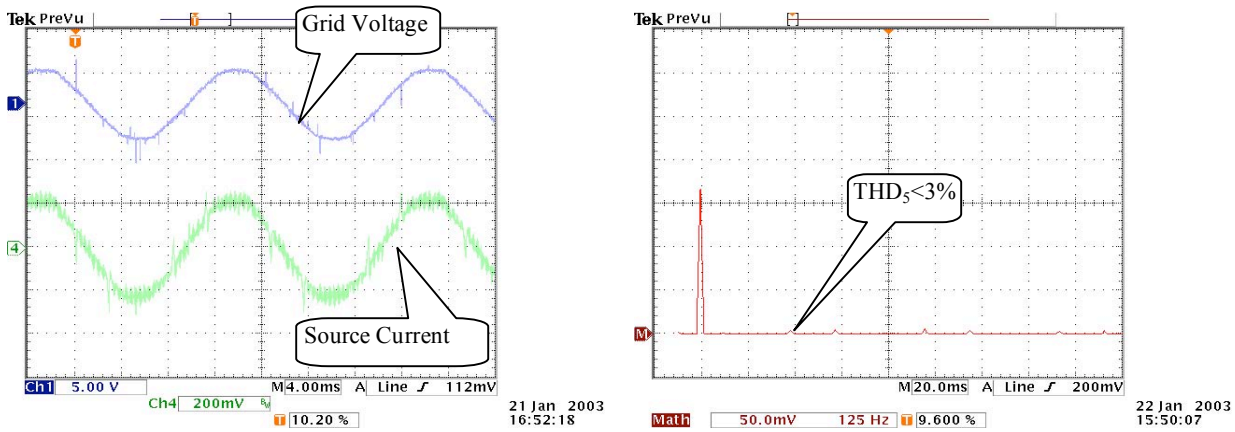

Figure 12 Voltage (up) & current (Low) waveforms and current spectrum in source branch (Phase A)

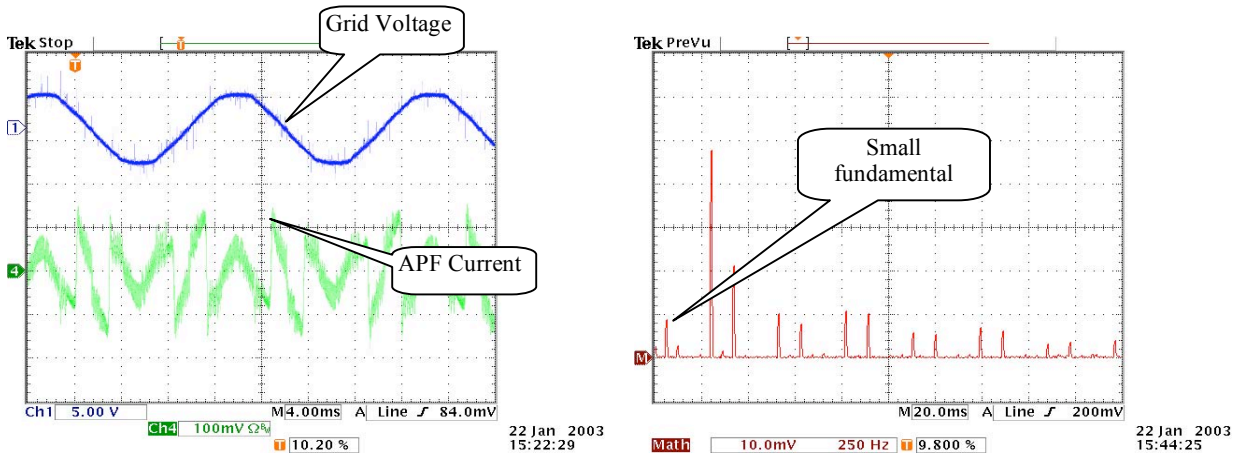

Figure 13 Source voltage (up) & APF output current (Low) waveforms and current spectrum in APF branch (Phase A)

Fig.11~fig.13 show the experimental waveforms of the developed OCC-APF measured at the load, source and APF output respectively.

Table.1 Measured data the currents & THD of load, source & APF branches (phase A)

Harmonic Order / Branch	1 th	5th	7th	11th	13th	17th	19th	23rd	THD
Source (I_n/ I_1)	100%	2.6%	2.3%	2.7%	2.8%	0	0	0	~ 5 %
APF (I_n/ I_{rms})	11%	88%	39%	18%	15%	0	0	0	-
Load (I_n/ I_1)	100%	27%	9.6%	7.9%	6.2%	4.5%	4%	2.8%	~30%

The experimental results shown in fig.11~13 & table.1 demonstrate that the designed APF can improve the current THD caused by the nonlinear load from ~30% to ~5 %; i.e. the APF compensates the harmonics so that the system draws approximate pure sinusoidal current from the grid/source; while the APF generate almost the all harmonics produced by the nonlinear load, and a very small fundamental component exist so that to keep the DC bus voltage constant. i.e. the OCC-APF has excellent steady-state performance.

As a result, the objectives 2~4 are well satisfied.

- Objective 5: Conduct the measurement for dynamical performance of the prototype

Fig.14~fig.15 demonstrate the dynamical specifications of the prototype as it is started. They are the source current, APF current and the DC bus voltage of the APF.

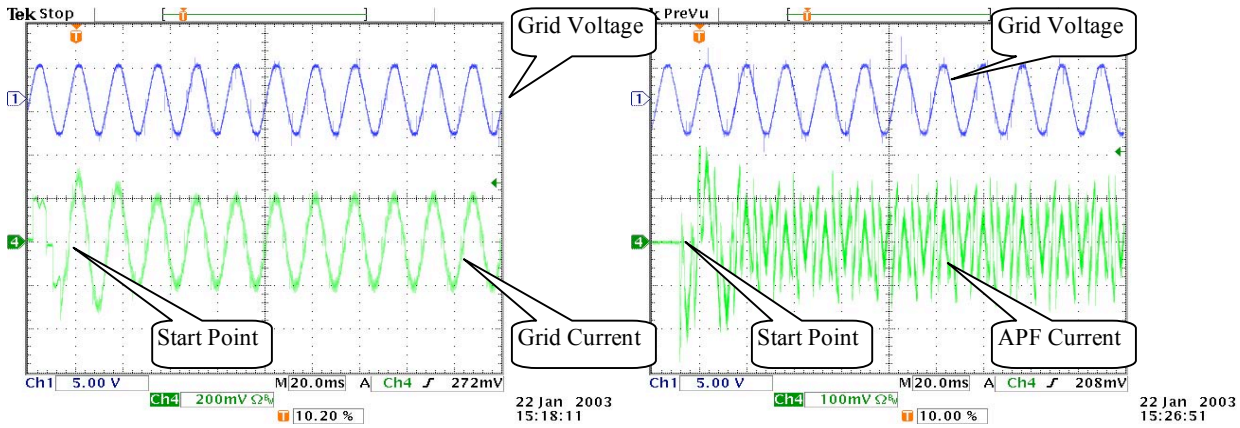

Figure 14 t up transient waveforms of source the current of the branches of source (left)/APF(right) (Phase A)g.14

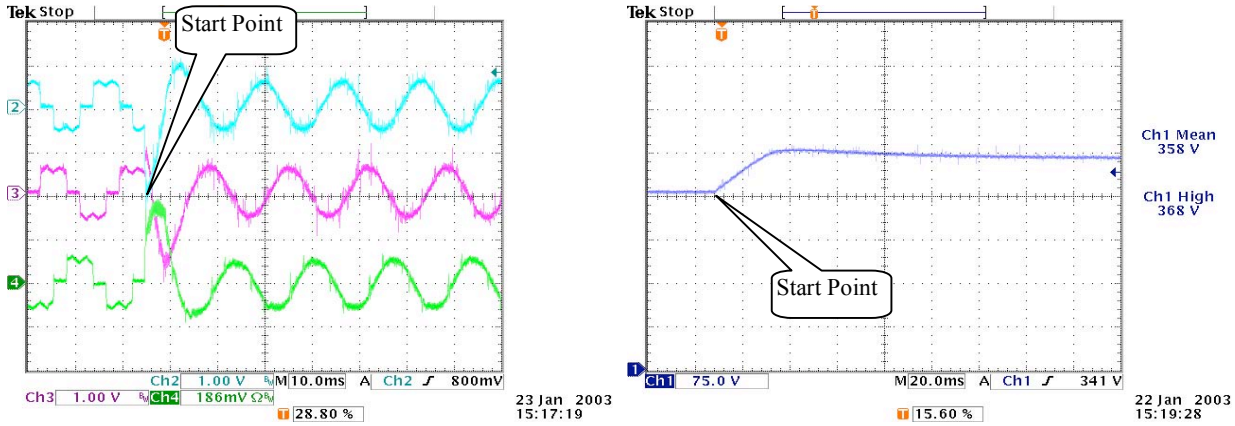

Figure 15 Start dynamical waveforms of three-phase source currents Right: Start dynamical waveforms DC bus voltage of the APF

Fig.16 shows the dynamical performance as the load steps up from 50% to 100% power rating. The three line current, load current and the APF current are shown in fig.16 (a), (b) and (c) respectively.

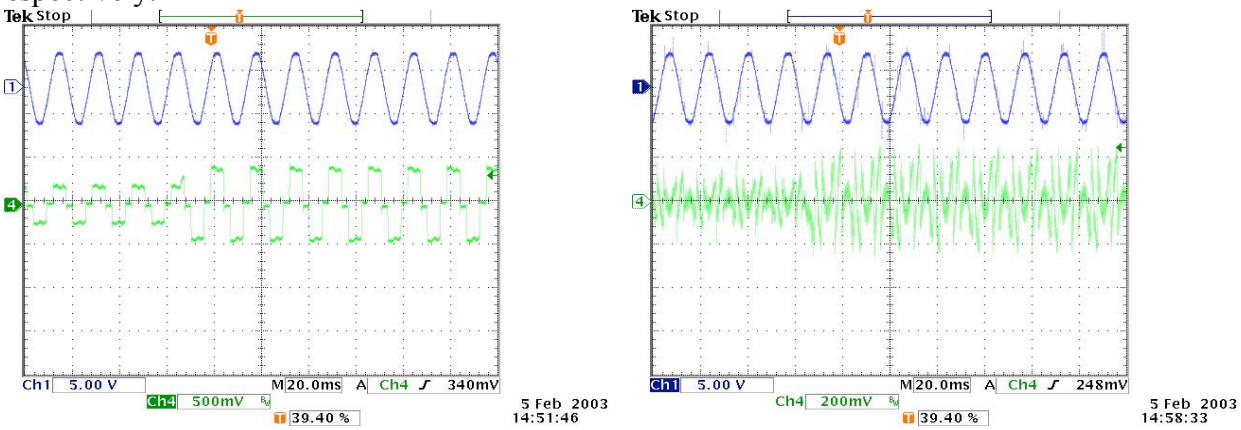

(a) Source Voltage (up) & Load Current (low) (b) Source Voltage (up) & APF Current (low)

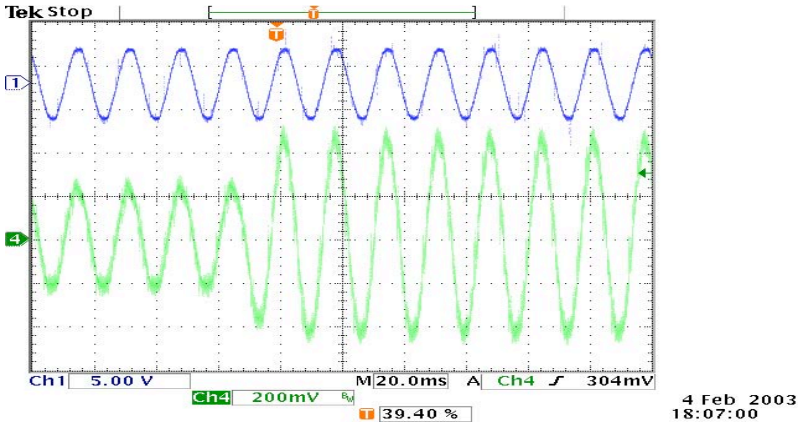

(c) Grid Voltage (up) & Source Current (low)

Figure 16 Dynamical waveforms as the load changed from 50% to 100% power rating

From fig.14~fig.16, it is clear that the system has excellent dynamic performance including short transient time (~1 line cycle) and low overshot, which are important for the OCC-APF to be commercialized.

Also, experimental measurements show the prototype itself has the efficiency about 96% at the rated power.

- Objective 6: Targeted capital cost of proposed power filter $200/KVA

Through the development of this bench-scale prototype, low cost objective is also verified to $200/kVA for commercial produce of this type OCC APF, if the components are purchased in the volume of 10,000 or more.

Conclusions

Active Power Filters are effective for the harmonic problems. With many advantages compared with previously proposed ones, the principal investigator (PI) of this project proposed an new APF with One Cycle Control. This method eliminates the need of sensing the three-phase load current, the nontrivial task of calculating the harmonics and reactive current components, as well as the use of any multipliers, as required by previously reported control methods.

Based on the OCC theory, a prototype APF with power capacity of 5 kVA has been fabricated. Steady state tests demonstrate that the OCC-APF has the capability of improve the line current THD (Total Harmonic Distortion) from 30% to 5%. Dynamic experiments show that this OCC APF has excellent stability. The OCC-APF has an efficiency of 96% itself. Through the development of this bench-scale prototype, low cost objective is also verified to $200/kVA for commercial produce of this type OCC APF, if the components are purchased in the volume of 10,000 or more.

The prototype complies with the all the proposed objectives and is proven to be a promising candidate to be commercialized for harmonic elimination in the commercial, residential and industrial environments.

Recommendations

Based on the success of this research and development, it recommend
(1) To develop a series of full-scale pre-industrial OCC-APFs (10kW~1MW)
(2) To put the full scale industrial model into field demonstration;
(3) To commercialize the developed OCC-APF technology.

Public Benefits to California

Energy benefits

According to the report from EPRI, ARC (Automated Research Corporation), EIA (Energy Information Administration) of DOE, and MECS (Manufacturing Energy Consumption Survey), at least 10~20% of the total electrical power rating of every electrical substation can not be used due to the reactive and harmonic current flow. The energy loss associate with this reactive and harmonic power is about $8.0*10^{15}$ Btu or $7.6*10^{11}$ kilowatt-hours (10% of the domestic electrical energy consumption, 1997).

Currently, there are no similar/comparable devices installed since the previously proposed systems are too complicated to be reliable and cost-effective. Therefore, we can only make comparison to the case without OCC-APF devices. The potential overall energy savings after installing the proposed devices in 50% of substations in united states could be up to $4.0*10^{15}$ Btu or $3.8*10^{11}$ kilowatt-hours.

Economic benefit

The direct benefit of using the proposed devices is the energy saving of $3.8*10^{11}$ kilowatt-hour and the boost of the power transmission capacity of 5%. In addition, it will generate a huge OCC-APF market that can penetrate into every sector of our economy. The markets for the proposed device are in the industries which face the serious problems of reactive power and/or harmonics as shown in table 2.

Table 2. The main industries & typical equipment related problems of energy quality.

Main Industries / Typical Related Equipment	Steel	Aluminum	Petrol / Oil	Water	Glass	Railway	Mining	Machine	Utility	Construct	Tel. Com.	Hi. Tech.	Building	Power Sys.
AC driver	√	√	√	√	√	√	√	√		√				
Heater	√				√			√		√				
Rectifier	√	√	√	√	√	√	√	√	√	√	√	√	√	√
AC/DC Converter		√				√			√	√	√			√
Office/Home	√	√	√	√	√	√	√	√	√	√	√	√	√	√

The total market capacity is estimated to be billion dollars, taking consideration that the total domestic capacity is 800,000 megawatts (from the statistics of 1999) and the volume price of the proposed device is $200/kVA. The market capacity is estimated to be 1.5 billion and 2 billion dollars in 2010 and 2020 respectively. The estimated manufacture cost of proposed devices is $50/kW.

Environmental benefit

By installing the proposed devices in 50% of the users, we can reduce the resources used in power generation. As a result, under the assumption of total saving 4.0×1015 Btu, the potential environmental benefit is derived by reducing the air-borne emissions from the electric power industry in the United State (according to the statistics of 1999):

Sulfur dioxide (SO2) : 0.65 million tons.
Nitrogen oxides (NOx) : 0.4 million tons;
Carbon dioxide (CO2) : 125 million tons.

Development Stage Assessment

Table.3 is the evaluation matrix for the development stage. As it was suggested previously to develop a series of full-scale pre-industrial OCC-APFs (10kW~1000kW) and put into field demonstration; and to look for technology transformation partner(s) in industry & investigate the product market;

Table .3 Development Assessment Matrix

Stages / Activity	1 Idea Generation	2 Technical & Market Analysis	3 Research	4 Technology Develop-ment	5 Product Develop-ment	6 Demon-stration	7 Market Transfor-mation	8 Commer-cialization
Marketing								
Engineering / Technical								
Legal/ Contractual								
Risk Assess/ Quality Plans								
Strategic								
Production. Readiness/								
Public Benefits/ Cost								

References

[1] H. Akagi, "New trends in active filters for power conditioning," IEEE Trans. Ind. Applicat., vol. 32, no. 6, pp. 1312–1322, 1996.

[2] F. Z. Peng, H. Akagi, and A. Nabae, "A new approach to harmonic compensation in power systems—A combined system of shunt passive and series active filters," IEEE Trans. Ind. Applicat., vol. 26, no. 6, pp.983–990, 1990.

[3] Fujita,H.;Akagi,H, The unified power quality conditioner: the integration of series and shunt-active filters, Power Electronics, IEEE Transactions on , Volume: 13 Issue: 2 , Page(s): 315 -322, Mar 1998.

[4] H. Akagi, Y. Kanazawa, and A. Nabae, "Generalized theory of the instantaneous reactive power in three-phase circuits," in Proc. IPEC-Tokyo, 1983, pp. 1375–1386..

[5] L. S. Czarnecki, "Orthogonal decomposition of the currents in a 3-phase nonlinear asymmetrical circuit with a nonsinusoidal voltage source," IEEE Trans. Instrum. Meas., vol. 37, pp. 30–34, Mar. 1988.

[6] J. H. R. Enslin and J. D. V. Wyk, "Measurement, compensation of fictitious power under nonsinusoidal voltage, current conditions," IEEE Trans. Instrum. Meas., vol. 37, pp. 403–408, Sept. 1988.

[7] D. A. Torrey, A Al-Zamel, "Single –phase active power filter for multiple nonlinear loads"

IEEE Transactions on Power Electronics, Vol. 10, pp.263-271, May 1995.
[8] J.-C. Wu and H.-L. Jou “Simplified control method for the single-phase active power filter” IEE. Proc. Electr.Power Appl.., ol. 143, No. 3, May 1996.
[9] Fabiana Pottker and Iov Barbi “Power Factor Correction of Nonlinear Load Employing a Single Phase Active Power Filter: Control Strategy, Design Methodology and Experimentation” PESC 1997 Record 28th annual IEEE Power Electronics Specialists conference.
[10] K.Smedley and S. Cuk "Switching Flow-Graph Nonlinear Modeling Technique," IEEE Transactions on Power Electronics, July 1994, Vol. 9, (no.4): 405-13
[11] C. Qiao, T. Jin, and K. Smedley, Unified Constant-frequency Integration Control of Three-phase Active-Power-Filter with Vector Operation Power Electronics Specialists Conference, 2001.PESC.2001 IEEE 32nd Annual , Volume: 3 , 2001 Page(s): 1608 -1614 vol. 3