Arnold Schwarzenegger
*Governor*

# LIGHTING RESEARCH PROGRAM PROJECT 2.1 HYBRID OUTDOOR LIGHTING SYSTEMS

PIER FINAL PROJECT REPORT

*Prepared For:*
**California Energy Commission**
Public Interest Energy Research Program

*Prepared By:*
California Lighting Technology Center

April 2007
CEC-500-2005-141-A2

***Prepared By:***
California Lighting Technology Center
Kevin Gauna
Erik Page
Davis, CA 95616

***Managed By:***
Architectural Energy Corporation
Judie Porter, Program Director
Boulder, CO 80301

***Prepared For:***
Public Interest Energy Research (PIER)
**California Energy Commission**

Michael Seaman
***Contract Manager***

Norm Bourassa
***Program Area Lead***
***Building End-Use Energy Efficiency Program***

Daryl Mills
***Office Manager***
***Energy Efficiency Research Office***

Martha Krebs, Ph.D.
***PIER Research Director***

Thom Kelly, Ph.D.
***Deputy Director***
***ENERGY RESEARCH AND DEVELOPMENT DIVISION***

Melissa Jones
***Executive Director***

**DISCLAIMER**

This report was prepared as the result of work sponsored by the California Energy Commission. It does not necessarily represent the views of the Energy Commission, its employees or the State of California. The Energy Commission, the State of California, its employees, contractors and subcontractors make no warrant, express or implied, and assume no legal liability for the information in this report; nor does any party represent that the uses of this information will not infringe upon privately owned rights. This report has not been approved or disapproved by the California Energy Commission nor has the California Energy Commission passed upon the accuracy or adequacy of the information in this report.

This report is dedicated to the memory of Don Aumann,

the California Energy Commission's

Lighting Research Program Project Manager from 2002–2005.

Don was the consummate engineer, dedicated to energy efficiency and his work. Most important, he was a wonderful family man and friend. He will be missed.

Don Aumann

June 17, 1959 – March 9, 2007

# Acknowledgments

The California Lighting Technology Center (CLTC) greatly appreciates and wishes to acknowledge the invaluable assistance of the following individuals:

**Technical and Market Expertise:** Randy Borden and Barry Gould, Shaper Lighting; Jerry Mix, Jon Null, Roy Nishi, The Watt Stopper; Dave Bisbee and Connie Buchan, Sacramento Municipal Utility District; Greg Barry, Brett Parent, and Chuck Dean, Morrison Homes; and Marticus Electric.

**Element 2 Lead**: Steve Johnson, Lawrence Berkeley National Laboratory.

**Element 2 Technical Advisory Group**: Al Marble, Advance Transformer; James Ibbetson, Cree Lighting; Ted Ferreira, City Design Group; Bill Daiber, WFD Associates.

**Program Advisory Committee**: Ron Lewis, Department of Energy; Jerry Mills, Easy Lite; Gregg Ander, Southern California Edison; Bill Daiber, WFD Associates; James Bryan, Arden Realty; Neall Digert, Solatube; Jim Benya, Benya Lighting; Dennis Tiede, Sempra Utilities; Noah Horowitz, Natural Resources Defense Council; Amy Cortese, Northwest Energy Efficiency Alliance; Pekka Hakkarainen, Lutron; Peter Turnbull, Pacific Gas and Electric Company; Michael Waxer, Carmel Development Co; Kit Tuveson, Tuveson & Associates; David Kaneda, Integrated Design Associates, Inc; Connie Buchan, Sacramento Municipal Utility District.

**Editorial assistance:** Holly Larsen, Larsen Communications

**Program and Contract Management**: Judi Efhan, Nancy Jenkins, Steve Williams, Ann Peterson, Sunni Chacon, and Michael Seaman, California Energy Commission; Karl Johnson, California Institute for Energy Efficiency; Eric Stubee, SAIC; Don Frey and Judie Porter, Architectural Energy Corporation; Don Aumann, California Lighting Technology Center; Holly Larsen, Larsen Communications.



Please cite this report as follows:
Gauna, Kevin and Page, Erik. 2006. *Hybrid LED Outdoor Luminaires.* California Lighting Technology Center for the California Energy Commission, PIER Energy-Related Environmental Research. CEC-500-2005-141-A2.

# Preface

The California Energy Commission's Public Interest Energy Research (PIER) Program supports public interest energy research and development that will help improve the quality of life in California by bringing environmentally safe, affordable, and reliable energy services and products to the marketplace.

The PIER Program conducts public interest research, development, and demonstration (RD&D) projects to benefit the electricity and natural gas ratepayers in California.

The PIER program strives to conduct the most promising public interest energy research by partnering with RD&D entities, including individuals, businesses, utilities, and public or private research institutions.

PIER funding efforts are focused on the following RD&D program areas:

- Buildings End-Use Energy Efficiency
- Energy-Related Environmental Research
- Energy Systems Integration
- Environmentally Preferred Advanced Generation
- Industrial/Agricultural/Water End-Use Energy Efficiency
- Renewable Energy Technologies
- Transportation

*Lighting Research Program Project 2.1 Hybrid Outdoor Lighting Systems* is one of three final reports for the Advanced Lighting Technologies Element of the PIER Lighting Research Program (contract number 500-01-041). This project was conducted by the California Lighting Technology Center (CLTC) and managed by Architectural Energy Corporation. This report is an appendix to the final report for the PIER Lighting Research Program conducted by Architectural Energy Corporation. The information from this project contributes to PIER's Building End-Use Energy Efficiency program.

For more information about the PIER Program, please visit the Energy Commission's website at www.energy.ca.gov/pier/ or contact the Energy Commission at 916-654-5164.

# Table of Contents


Preface ..... i
Abstract ..... v
Executive Summary ..... vii
1.0 Introduction ..... 1
1.1. Background ..... 1
1.2. Technology ..... 1
1.3. Opportunities ..... 2
2.0 Project Development ..... 5
2.1. The LED Hybrid Approach ..... 5
2.2. Fixture Controls ..... 6
2.3. Identification of Low-Cost, Efficient LEDs ..... 6
2.4. Osram Golden Dragon ..... 6
2.5. Optical Configurations ..... 7
3.0 Project Outcomes ..... 13
3.1. Energy Savings ..... 13
3.2. Prototypes ..... 14
3.3. Prototype 2: Wall pack Hybrid fixture – LED with Incandescent ..... 15
3.4. Laboratory Tests ..... 18
3.5. Field Tests ..... 18
3.6. Product Specification Overview ..... 19
3.7. Market Connections ..... 20
4.0 Other Considerations ..... 21
4.1. LED Efficacy ..... 21
4.2. LED Color Rendering ..... 21
4.3. End-User Acceptability ..... 22
4.4. Title 24 Standards ..... 22
5.0 Current Status and Next Steps ..... 25
6.0 Conclusions and Recommendations ..... 27
6.1. Conclusions ..... 27
6.2. Recommendations ..... 27
6.3. Benefits to California ..... 27
7.0 Glossary ..... 29
Appendix A: Detailed Product Specifications ..... 31
Appendix B: Energy Analysis ..... 35

## List of Figures

Figure 1. Left: Both LED and conventional lamp on; right: LED only ..... 5
Figure 2. Osram Golden Dragon LED ..... 7
Figure 3. LED reflector design ..... 8
Figure 4. Side view of Osram Golden Dragon LED ..... 9
Figure 5. Dragon LED mounted to an FR4 pcb with thermal vias ..... 10
Figure 6. Orcad screen shot showing the LED array ..... 10
Figure 7. Photo of prototype fixture ..... 15
Figure 8. Solid model CAD drawing of fixture ..... 15
Figure 9. Goniometer plot ..... 15
Figure 10. Photo of prototype fixture ..... 16
Figure 11. Solid model CAD drawing of fixture ..... 16
Figure 12. LED Array output (wall on left side) ..... 16
Figure 13. PAR security lamp; LED off ..... 17
Figure 14. PAR security lamp; LED on ..... 17
Figure 15. LED array output (wall on right side) ..... 17
Figure 16. PAR security lamp ..... 19
Figure 17. Solid model prototype with LEDs on and PAR lamps off ..... 20
Figure 18. Solid model prototype with LEDs off and PAR lamps on ..... 20

## List of Tables

Table 1. Energy use comparison (see Appendix B for additional notes) ..... 13
Table 2. Heatsink temperatures ..... 18

# Abstract

This report is an appendix to the final report developed under the Lighting Research Program, which supported the creation of new lighting technologies and products that can save energy, cut peak demand, and reduce air pollution for the citizens of California. It comprised 15 research projects conducted in four major research areas and three market connection projects, and encompassed both residential and commercial sectors, as well as outdoor lighting associated with buildings.

This report describes an effort to create products to provide residential and commercial customers a more energy efficient and cost-effective alternative for outdoor entry and walkway lights, which typically use incandescent or compact fluorescent lamps. To this end, the California Lighting Technology Center designed and built prototypes of a series of outdoor luminaires incorporating efficient light-emitting diode technology and intelligent controls. Shaper Lighting, a division of Cooper Lighting, manufactured the first series of a production luminaire, named the LED Hybrid, and commercialized the product in December 2004. The LED Hybrid electricity cost is about $0.01/day, and the fixture is expected to reduce energy consumption by 87 percent compared to standard incandescent fixtures and 53 percent compared to compact fluorescent fixtures. In addition, The Watt Stopper and Hunter Lighting have plans to manufacture similar products.

A number of follow-up commercialization efforts are in progress, including field demonstrations with Sacramento Municipal Utility District and at University of California and California State University campuses. Furthermore, a second manufacturer is developing additional product variations.



**Keywords:** light-emitting diode, LED, compact fluorescent luminaire, CFL, efficient lighting, outdoor luminaire, hybrid luminaire, LED hybrid, energy efficient outdoor entry light, energy efficient walkway light

# Executive Summary

## Introduction

Many exterior entry and walkway lights in homes and businesses use incandescent lamps because they are small and inexpensive. However, incandescent lamps are inefficient and burn out quickly - typically four times per year in this application if operated all night - causing high operating costs and security concerns. These fixtures can also use compact fluorescent lamps, which typically last two to four years but are expensive and can be difficult to fit into existing fixtures. In addition, the replacement of burned-out pin-based compact fluorescent lamps can be problematic, since retail stocking is inconsistent.

## Purpose

This project was initiated to find an energy efficient, low-cost, and convenient alternative to existing residential and commercial exterior entry and walkway lights. The current project also sought to ensure that the most promising concept would be transferred to the market.

## Objective

- Develop and bring to market an energy-efficient, economic, and reliable option for lighting residential and commercial exterior entries and walkways

## Project Outcomes

The California Lighting Technology Center research team generated 10 luminaire concepts and developed 4 prototypes. Of these, the Light-Emitting Diode Hybrid prototype emerged as the most promising fixture system. In this prototype, a continuously running light-emitting diode, controlled by a photosensor, provides a low level of highly energy efficient lighting during periods of darkness, and an incandescent bulb provides a higher level of light only when needed, as controlled by an occupancy sensor.

The research team partnered with The Watt Stopper Corporation on the controls and Shaper Lighting, a division of Cooper Lighting, on a commercial version of the fixture. Shaper Lighting commercialized the fixture in December 2004, pricing it for about $200.

The commercial Light-Emitting Diode Hybrid fixture uses five watts of light-emitting diode lighting all night long - costing only about $0.01/night - and 60 watts of incandescent lighting during “occupied” periods. Thus configured, the Light-Emitting Diode Hybrid is expected to reduce energy consumption 87 percent compared to a standard incandescent fixture.

A 13-watt compact fluorescent lamp could be substituted for the incandescent lamp. The Light-Emitting Diode Hybrid is expected to reduce energy consumption by 53 percent compared to a standard compact fluorescent lamp fixture. However, the low wattage of a 13-watt compact fluorescent lamp versus a 60-W incandescent lamp gives the Light-Emitting Diode Hybrid a longer marginal payback -nearly 10 years for residential applications and around five years for commercial - compared to the much greater savings versus an incandescent lamp. Also, the

light level of the compact fluorescent lamp at start-up may lag that of an incandescent lamp, which could create user acceptance issues.

Building on the successful product development efforts, the research team established a number of follow-up activities that were in progress at the project's completion:

- The National Parks Service hosted a demonstration and testing program in one of their parks. The Regional Energy Manager, Steve Butterworth, will assist in choosing and coordinating the test site.
- Sacramento Municipal Utility District purchased 50 units for application and testing in the Woodburn Apartments in Sacramento.
- The Watt Stopper Company was in the tooling phase for another version of the Light-Emitting Diode Hybrid concept based on the popular residential PAR lamp security light.
- Public Interest Energy Research-sponsored field demonstrations were to take place on the campuses of Cal Poly Pomona, California State University, San Marcos, and University of California, Davis, in mid-2005.

Due to market dynamics and the normal passage of time between the completion of research and the publication of research results, products anticipated for market delivery in this report may not necessarily reflect the actual array of products as delivered, or planned for delivery, by manufacturers. Therefore, the reader is advised to contact the lighting product manufacturers directly to ascertain the current status of products.

**Recommendations**

The Light-Emitting Diode Hybrid luminaire takes advantage of the strengths of different lighting technologies. The light-emitting diode component provides functional low-level illumination with long lamp life and wayfinding directionality at great energy savings. The incandescent and compact fluorescent lamp lamps provide high light levels when needed for security and greater vision. For future efforts, the research team recommends that other manufacturers adopt light-emitting diode lighting components for specialty applications, such as outdoor fixtures using occupancy sensors. In particular, mass-market applications at lower cost than the semi-custom Shaper units would stimulate widespread use of hybrid-type fixtures. However, the research team recommends assisting manufacturers in adopting light-emitting diode technology because, although relatively simple to use, it is new to many lighting manufacturers and can present technical challenges in system design and application.

**Benefits to California**

A 2000 survey conducted by RLW Analytics of 1,000 California homes found that roughly 80 percent of exterior residential lights use incandescent lamps, just over 6 percent of homes used a compact fluorescent lamp for exterior lighting, and only 15 percent of all porch lights are equipped with some form of control device, such as a motion detector, photocell, or timer.

Based on the above findings and on an estimated 28,443,000 sockets existing in California residential porch lights, researchers predicted that a one percent market penetration of the Light-Emitting Diode Hybrid could yield statewide energy savings of approximately 65,000 megawatt-hours per year. Demand savings would reach 15 megawatts.

Alternatively, California Energy Commission data shows 3,055 megawatts and 21,737 gigawatt-hours used in residential lighting. Assuming 11 percent is for outdoor lighting and using one percent market penetration for the hybrid fixture, the energy savings would be 20,150 megawatt-hours per year. Demand savings would be 2.4 megawatts.

Statewide energy impacts from a commercial version of this product were not calculated but are also expected to be significant.

# 1.0 Introduction

## 1.1. Background

There have been few fundamental breakthroughs in traditional lighting technologies for about 40 years. Nevertheless, significant incremental improvement has increased the efficiency of building lighting technologies by up to 50%. Even with these improvements, new scientific knowledge indicates the potential for additional improvements of up to 100%. Recent advances in solid state lighting technologies are enabling light-emitting diodes (LEDs) to create light, including white light, at levels and efficacies approaching or exceeding that of traditional light sources. LEDs have already widely adopted in cost-effective applications, such as traffic light signaling, and are beginning to be developed for promising commercial and residential applications.

Still, barriers remain to the widespread or rapid adoption of LED technology in illumination applications. Lumen outputs for LEDs are low compared to those for incandescent, fluorescent, or discharge type lamp sources. Specifically, current LED output is about 20–30 lumens per watt (lpw), compared to 15–20 lpw for incandescent lamps, 50– 60 lpw for CFL lamps, 90–100 lpw for full-size fluorescent lamps, and 50–130 lpw for high intensity discharge lamp sources. Further, costs for LEDs remain relatively high. Thus, LED applications making strong headway into the lighting marketplace are those that capture and utilize the unique benefits that the technology has to offer.

## 1.2. Technology

LEDs are solid state light emitters. A single LED comprises several parts, primarily the LED "chip" or "die," the surrounding LED "package," and, in the case of high-power LEDs, the heatsink. A high-power LED is configured to allow higher currents and higher lumen (lm) outputs than low-power LEDs. Put simply, high-power LEDs typically run at 1 watt or above and have package configurations that allow enhanced heat dissipation away from the LED die.

The major unique properties of typically associated with LED sources are described below:

- Long lifetime: The long lifetime of LEDs typically translates into low maintenance for LED applications. This can be especially beneficial in applications where replacement and maintenance costs run high, such as traffic signals, buoy lights and airport runway indicators. LEDs also offer the possibility to design fixtures without allowing for the replacement of the source, because the life of the source is greater than or equal to the life of the fixture. This presents the opportunity to design 'embedded' systems where the LED source is not removable from the fixture.
- High durability: The high durability of LEDs is particularly beneficial in portable applications, such as flashlight, that can suffer from impact and physical shocks. In contrast, the light source is not the weak link in permanent fixtures. Rather, the durability of the entire permanent fixture will be considered, without undue attention given to the light source.

- Very low profile: The low profile nature of LED technology allows LED fixture design and placement in small, hidden, or otherwise restricted spaces too small for many other light sources (cold cathode fluorescent lamps and miniature incandescent lamps being two exceptions). The benefits from this property, however, can be limited by a need for secondary optics to alter the distribution of light or control direct glare. Secondary optical devices are often required for light distribution and usually have spatial dimensions much larger than do the LEDs themselves.
- Highly directional output: The light distribution of LED sources is typically contained within 180 degrees, and can be focused into a relatively narrow beam angle with the appropriate chip/lens configuration. This tight focus can be an advantage in the design of task lighting, as it reduces the optical engineering necessary to deliver light to a specific area. It can also enable the coupling of the LED light source with fiber optics or light guides, which may lead to novel perimeter lighting methods. One drawback to this approach is the relatively poor efficiency of such coupled systems, which puts a higher lumen requirement on an already lumen-challenged technology

Yet LED technology is rapidly evolving. Even within the duration of this project, the state-of-the-art LED changed dramatically. Lumen outputs increased, new package designs emerged, and white LEDs became available with high color rendering indexes (CRIs) and low color temperatures. This is not to say that the technology is mature; on the contrary, the barriers to adoption mentioned above still exist. However, with the evolution of the technology comes increased opportunity to develop viable, energy efficient lighting systems that can compete with more mature lighting technologies dominant in the marketplace today.

## 1.3. Opportunities

The California Lighting Technology Center (CLTC) identified several near-term illumination opportunities for LED technology. These opportunities were identified in an earlier report for this project (*Report 2.2.1, LED Market Opportunity Report*). The list in that report was compiled during the later part of 2002, and some of these opportunities were subsequently developed by industry into market products or became product efforts under development by others. A subset of the identified opportunities was chosen for further development and exploration for this project.

Outdoor lighting was chosen as the focus for the PIER-sponsored development of LED hybrid luminaries. Because many outdoor environments have lower illuminance needs and less stringent color rendering requirements than typical indoor environments, outdoor lighting was considered a good opportunity for LED technologies. Adaptation by the eye to darkness, as well as the types of tasks performed outdoors (people usually do not read outside at night) allow lighting designers and engineers to build systems that produce less light than indoor systems. It was thus deemed most promising to develop LED exterior fixtures to replace large-area, low-glare fixtures or to replace fixtures that produce very high delivered lumens.

The term "delivered lumens" refers to the lumen output of a fixture system onto a specific task plane. For exterior lighting, this task plane is defined as the wall beneath the fixture and the ground adjacent to this wall. The exact dimensions of these surfaces are then defined to meet certain visibility or coverage requirements. In residential applications, the visibility requirement calls for providing coverage to a front porch or other area in front of the fixture with possible additional coverage to a pathway leading to a door or entryway. In commercial or institutional applications, the visibility requirement calls for installing multiple fixtures along the side of a building and providing continuous coverage along the line of the building. For wayfinding or in commercial and institutional settings, the spacing of the fixtures becomes important in lighting system design. LEDs, with their inherent directional qualities, have the potential to yield high fixture efficiencies and very good delivered lumen levels in the various applications.

The following issues were considered in the context of developing a viable LED illumination source for outdoor applications:

- The majority of commercial lighting fixtures and sources have lumen outputs near or above 1000 lumens. This high lumen requirement makes building comparable LED-based fixtures difficult, calling for multiple LEDs in an array, with associated cost factors. On the positive side, LEDs have specific, directional light output qualities that can be utilized to place light where it is needed.
- Colored incandescent sources rely on color filters to output specific wavelengths. As an example, a 60-watt 'white' incandescent lamp emits ~ 900 lm at about 15 lpw. The same lamp is used for colored bulbs, with a filter applied to the bulb surface. A 60-watt yellow 'bug' lamp emits ~ 500 lm (8 lpw). The remaining lumen output in other wavelengths is essentially thrown away.
- As noted above, LEDs exhibit high lifetimes, low failure rates, and robust physical designs that can withstand considerable shock and vibration. These qualities have been a major driving force for LEDs in applications where lamp replacement and maintenance is difficult or expensive. Also, LEDs are low voltage and very low profile sources, which can allow for low profile fixtures or inclusion of sources in areas otherwise inaccessible.

Given these issues, researchers felt that the best near-term opportunities for LEDs were outdoor applications with lower lumen output requirements, highly directional output characteristics, and colored illumination, or critical performance applications where maintenance is difficult or expensive. In addition, using LED technology—coupled with an incandescent lamp or compact fluorescent lamp (CFL) and a motion sensor—for outdoor applications provides the following benefits:

- *Increased security*: The color change that occurs with motion activation increases user awareness that someone is in the control area.
- *Back-up light*: If the incandescent or CFL fails, the LED portion will remain on.
- *Increased lighting flexibility*: The LED illumination can light a door, address numbers, or other features.

- *Societal benefit*s: LED-based fixtures have the capability to reduce light trespass and light pollution.

# 2.0 Project Development

## 2.1. The LED Hybrid Approach

The product attributes and LED opportunities identified in this project were used to generate a series of LED fixture concepts for initial prototyping and testing. The incorporation of the various identified elements led to an overall fixture design approach: the LED Hybrid fixture. These fixtures use LED arrays in conjunction with traditional incandescent or fluorescent sources. The entire fixture is controlled by a photocell that keeps all lights off during the day. At night, the photocell turns the fixture on. The low-wattage LED array stays on for the duration of the evening and provides low level ambient illumination in the area around the fixture. When the motion sensor detects motion, it turns on the incandescent or fluorescent lamp for a short duration to raise the light output of the fixture to a level equal with standard outdoor fixtures (see Figure 1).

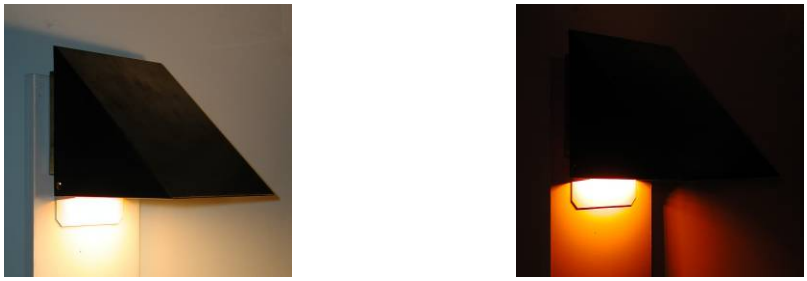

**Figure 1. Left: Both LED and conventional lamp on; right: LED only**

This approach offers the following benefits:

- The fixtures save energy by switching on the incandescent or fluorescent lamp only when motion is detected.
- The fixtures provide pleasant, ambient LED background and wayfinding light, eliminating dark spots commonly associated with motion sensor systems that do not provide constant illumination.
- If the primary incandescent or CFL lamp burns out, the LED will still yield functional light from the fixture.
- While LED technology could be used for both low-level and high-level illumination, the use of incandescent or fluorescent lamps together with low-level LED illumination eliminates the need for relatively more expensive high lumen output LED arrays.
- The use of colored LEDs provides a color-changing feature as an added benefit.

The generation and selection of prototype concepts were guided by such product features as color rendering, lumen output and delivered lumens, visibility, and control, which are detailed

in an earlier report (*2.1.2 Product Attribute Matrix*) for this project. These features were necessary to consider in developing new concepts for energy-efficient LED luminaries.

## 2.2. Fixture Controls

The research team determined that it was necessary to integrate the following fixture controls into the prototype designs:

- **Daylight sensing**: The ability of an outdoor luminaire to sense the presence of daylight and switch off a lamp accordingly.
- **Motion sensing**: The ability of a luminaire to sense physical movement in a specific zone and change its photometric output. Studies at Lawrence Berkeley National Laboratory have shown that motion sensing can produce dramatic energy savings in applications with long burn hours.
- **Dimming**: The ability of a lamp/control system to deliver a variable amount of light output.

## 2.3. Identification of Low-Cost, Efficient LEDs

The research team purchased and evaluated several different LEDs from various manufacturers, considering such features as light output and the ration of light output to cost, availability, and assembly requirements. After initial testing and evaluation, LEDs from Lumiled and Osram were chosen for further examination. The Osram Golden Dragon was finally selected for use in the fixtures from Shaper.

## 2.4. Osram Golden Dragon

Osram's high output LED series is called the "Dragon" series (see Figure 2). These LEDs are 1-watt devices aimed at high output, automated production applications. Product details are listed below:

- Efficacy: 20 lm/W, rated
- Inexpensive ($1.63/piece)
- Small package
- Automated assembly

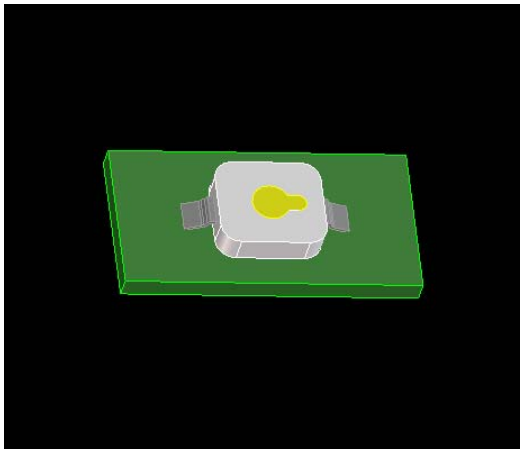

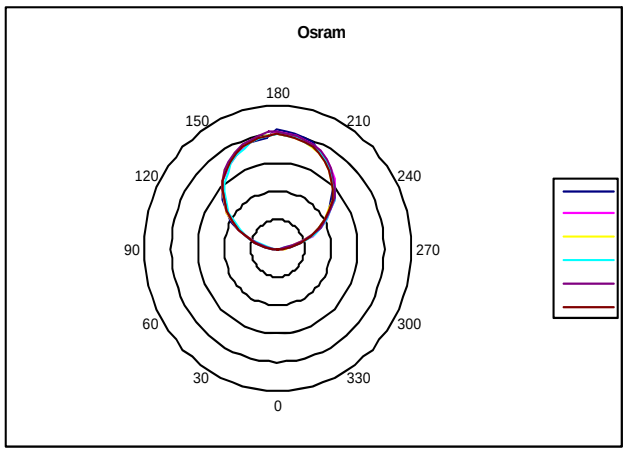


**Figure 2. Osram Golden Dragon LED**

## 2.5. Optical Configurations

### 2.5.1. Considerations

Any fixture that allows direct viewing of the LED chip source will produce objectionable disability glare to the viewer. In an outdoor nighttime environment, this glare will impair the ability of the eye to adapt to low ambient light levels. As LED efficiencies and outputs increase, so will the need to mitigate the problem of direct glare.

Cutoff angles are also important when considering the reflector/diffuser design. Deep reflector designs can eliminate the possibility of glare, but will also be physically much larger than the LEDs' own dimensions. Also, sharp cutoff angles can create heavy shading at the edge of the distribution.

### 2.5.2. Options

The options considered for decreasing direct LED glare, and distributing the light along the wall and ground were as follows:

- **Diffusers:** Diffusers have transmittances in the range of 45–70%. Inter-reflections within the light cavity can increase the external transmission. Researchers experimented with the traditional diffusers of acrylic and frosted glass. Neither was able to produce fixture efficiencies over 75% in the experiments performed. The light distribution was, however, aesthetically acceptable. Holographic diffusers from Wavefront Technologies were also used in experiments. Holographic diffusers have microscopic patterns pressed into thin plastic sheets. The light output distributions obtainable with these diffusers were good, but the experiments were unable to produce efficiencies greater than 80%.

- **Prismatic lens arrays:** Acrylic prismatic lenses were able to mitigate the glare problem and give reasonable efficiencies. Most acrylic lenses allow transmissions higher than 90%. Some lens imaging occurred, but proper design should be able to address this issue. The experiments at the lab produced efficiencies closer to 85%.

While the use of these lenses can produce acceptable results, other novel approaches evolved that appeared more suitable.

- **Specular reflectors:** Specular reflectors are easy to form and offer reflectivities in the 92–98% range. These reflectors do not address the issue of multiple shadows, and most designs using LEDs will need deep fixture geometries to avoid direct glare. No favorable specular reflector designs were generated.
- **Diffuse reflectors:** Diffuse reflectors produce reflectivities in the 80–96% range. The type found to offer the most appealing output was a gloss white high reflection powder coat paint. Experiments were performed to determine the best configuration, and a preferred embodiment was identified.

The reflector shown in Figure 3 aims the light emitted by the LEDs back at the wall at an angle of 45 degrees to the horizontal. The reflector has one 90-degree angle and one 135-degree angle, as well as holes corresponding to the LED locations to allow light into the cavity. No front cover was used, and a portion of direct LED flux was allowed to reach the wall and floor beneath the fixture. Another portion of the flux was diffusely reflected down and away from the wall. Glare was mitigated, and multiple shadows were smoothed out from the diffuse light.

The design yielded an output with a wall component and a ground component, and the cutoff angle was very soft. Depending on the entire fixture geometry, there was no, or a negligible portion of, the flux above the horizontal. The nature of the design made this approach scalable to accommodate any number of LEDs in a linear row, and the diffuse reflection allowed variations in reflector dimensions without greatly affecting the efficiency. The reflector was 1–1.5 inches in depth, and most designs had efficiencies in the 90–94% range. Overall impressions of the output were very positive. Issues concerning the direct exposure of the LED lens were investigated.

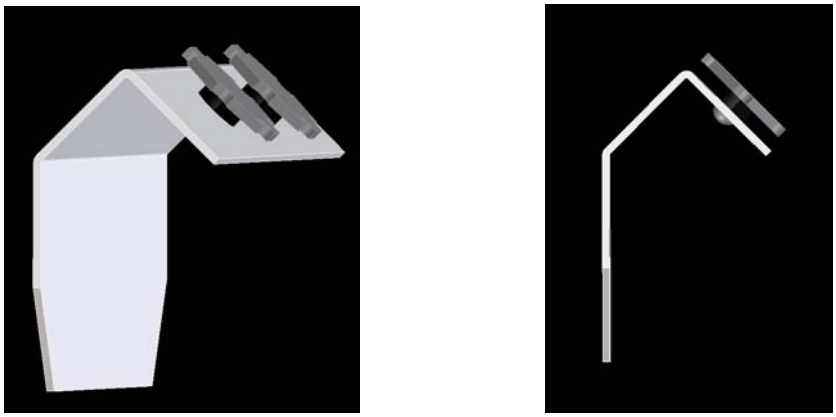

**Figure 3. LED reflector design**

The diffuse reflector approach was shown to have the best results for efficiency and desired output. The design is both simple and inexpensive, and allows integration into any number of fixture geometries.

### 2.5.3. LED array design

Osram Golden Dragon LEDs are designed to be mounted to a heat sink to conduct the heat away from the LED chip. The semiconductor chip (or 'die') is mounted to a copper slug which is exposed on the bottom of the LED package. This exposed surface then must be connected (with solder or thermal epoxy) to an external heat sink (see Figure 4).

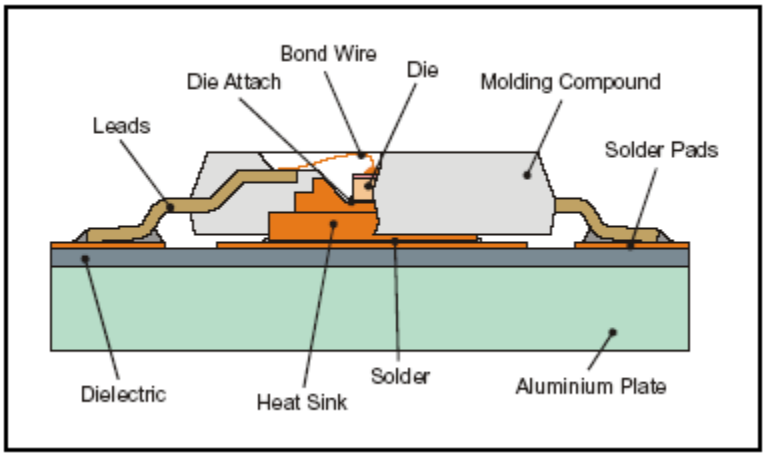


**Figure 4. Side view of Osram Golden Dragon LED**

Osram has tested and published acceptable methods to accomplish this thermal dissipation. One method employs metal core printed circuit board (mcpcb) technology, where a printed circuit board (pcb) layer is laminated to an aluminum base plate. This configuration is typical for high-power LEDs. Another method, common to electronic assemblies in general, is to use plated through-holes on a double-sided circuit board as thermal vias.

Typical circuit boards (see Figure 5) have two layers of copper laminated to both sides of a fiberglass (FR4) epoxy sheet. The copper layers are etched to produce wire 'traces' which carry electrical signals. Electronic components are soldered to copper 'pads' etched onto the pattern. Plated through-hole vias are holes that have been drilled into the sheet and metallically plated to conduct electric signals from one side of the board to the other. These vias will also conduct heat, and in this application are used to conduct heat from the copper slug of the LED package to the back side of the circuit board, where it then is conducted to another external heat sink (in this case the aluminum reflector of the assembly)

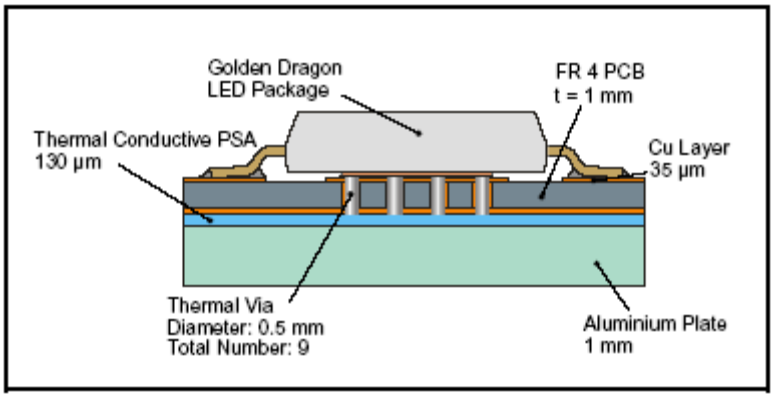


**Figure 5. Dragon LED mounted to an FR4 pcb with thermal vias**

The printed circuit board array design was set up using Orca design software. The basic process for designing a printed circuit board begins with a schematic diagram that shows the electrical components and connections in symbolic form. This schematic design is then translated to a graphic representation of the physical circuit board showing trace lines, copper pads, through hole vias, board outlines, solder mask outlines, and other features. A series of files (called Gerber files) is generated, which a circuit board manufacturer uses to fabricate the part.

The printed circuit board array for the project's design uses 2-ounce copper layers on a 0.032-inch thick FR4 board. The via drill diameters are .015 inches. The overall board dimension is 0.625 inches X 3.25 inches

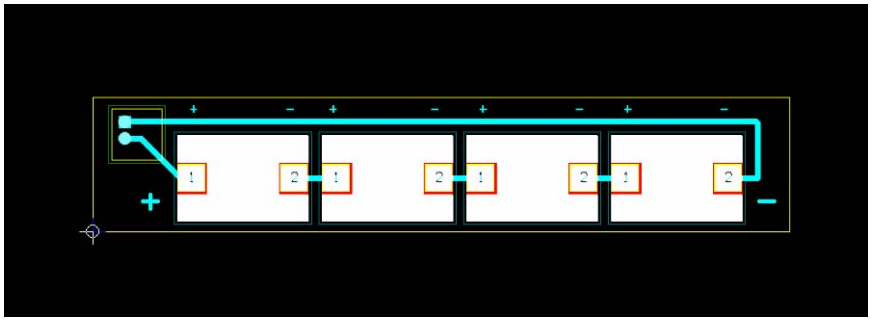

**Figure 6. Orcad screen shot showing the LED array**

The array in Figure 6 shows four Osram LEDs connected in series with mounting pads for an external electrical connector (header) used to connect the array to the driver.

Once the printed circuit board has been fabricated, the LEDs are 'assembled' onto the board. Basically, this step entails soldering the LEDs onto the appropriate pads. The design of the Osram Dragon LED requires the use of solder paste in a reflow process. Solder paste is applied to the pads, the LEDs are placed onto the solder paste, and the board is heated to a temperature high enough to melt the solder and 'reflow' the electrical connections.

The assembled LED array is mounted to an external heatsink. In this design, the aluminum reflector also serves as the heatsink. Several different methods for attaching the array to the heatsink exist. Typically these methods fall into three major categories:

- **Thermal transfer tapes:** These are essentially double-sided tapes with thermally enhanced fillers to allow heat conduction through the tape. These tapes offer the advantages of ease of assembly, the ability to remove the part if necessary, and low cost.
- **Thermal epoxies:** These are epoxies specifically formulated to allow heat conduction through the epoxy. These epoxies typically offer higher performance than the thermal tapes but are more difficult to use in the assembly process and are higher cost. When using thermal epoxies, the assembly process must include time for the epoxy to cure, during which the part must not be disturbed. Epoxies typically are permanent.
- **Mechanical attachment**: In this standard practice, set screws typically hold the printed circuit board onto the heatsink. A thermal pad or thermal grease is applied to the back contact surface to fill gaps and encourage heat transfer. Mechanical attachment requires the heatsink to include screw posts or screw holes. During assembly, mechanical attachment is frequently more labor intensive than thermal tapes and on par with thermal epoxies.

# 3.0 Project Outcomes

## 3.1. Energy Savings

Energy savings for these fixtures are based on estimated occupancy rates for the coverage area of the fixtures and the base energy usage of comparable fixture systems (see Table 1). When compared to existing motion-controlled-only fixtures with the same primary lamp source, the LED Hybrid fixture offers no energy savings because of the added 5-watt LED component. When compared to non-motion controlled systems with the same primary lamp source, energy savings are inversely proportional to the occupancy of the coverage area (less motion equals higher savings) Finally, when compared to existing systems with different primary lamp sources (specifically, incandescent plus LED versus CFL), there is an energy use crossover point dependent on the duration of activation of the incandescent lamp.

The sample analysis assumes 12 hours per night average usage and fixtures using a 60-watt incandescent lamp or 13-watt CFL lamp (requiring 16 watts including the ballast). We assumed occupancy-sensor-controlled usage for the conventional lamps in the hybrid fixture to be 0.5 hour/night. Under this scenario, the hybrid LED fixture with a conventional lamp cuts energy use by 87% compared to a continuously-operating incandescent lamp and 53% compared to a continuously-operating 13 watt CFL. The Hybrid fixture with an incandescent lamp uses less energy than a continuously operating CFL until the hybrid fixture's occupancy sensor requires more than 8.25 hours of incandescent operation.

Substituting a 13-watt CFL for the 60-watt incandescent shows modest energy savings of about $1.00/year—not enough to justify an estimated $10 additional equipment cost for the LED functionality. However a CFL requires time to warm up to its full light level and the time needed for a CFL to reach its full level at start-up generally lags that of incandescent lamps.

Table 1 summarizes the analyses for the various scenarios tried in the project.

**Table 1. Energy use comparison (see Appendix B for additional notes)**

| *Scenario* | *Lamp #1* | | | | | *Lamp #2* | | | | | *Total* | | |
|---|---|---|---|---|---|---|---|---|---|---|---|---|---|
| | *type* | *W* | *hr/night* | *kWh/yr* | *$/yr* | *type* | *W* | *hr/night* | *kWh/yr* | *$/yr* | *$/yr* | *%* | *%* |
| 1. Base Case | Inc | 60 | 12 | 263 | 34.16 | n/a | 0 | 0 | 0 | 0.00 | $34.16 | 100% | |
| 2. Base w/occ | Inc | 60 | 0.5 | 11 | 1.42 | n/a | 0 | 0 | 0 | 0.00 | $1.42 | 4% | |
| 3. CFL | CFL | 16 | 12 | 70 | 9.11 | n/a | 0 | 0 | 0 | 0.00 | $9.11 | 27% | 213% |
| 4. CFL w/occ | CFL | 16 | 0.5 | 3 | 0.38 | n/a | 0 | 0 | 0 | 0.00 | $0.38 | 1% | |
| 5. LED w/inc | LED | 5 | 12 | 22 | 2.85 | Inc | 60 | 0.5 | 11 | 1.42 | $4.27 | 13% | 100% |
| 6. LED w/CFL | LED | 5 | 12 | 22 | 2.85 | CFL | 16 | 0.5 | 3 | 0.38 | $3.23 | 9% | 76% |
| 7. x-over #5 vs #3 | LED | 5 | 12 | 22 | 2.85 | CFL | 16 | 8.25 | 48 | 6.26 | $9.11 | 27% | |

As can be seen in the above calculations, the energy use and savings of the LED Hybrid fixture is a function of the application environment. This fixture is intended for areas where traditional motion-controlled fixtures and CFL-based fixtures have not been able to penetrate the standard incandescent market.

A 2000 survey, conducted by RLW Analytics, of 1000 California homes made the following conclusions on the use of exterior residential lights:

- Roughly 80% of all porch lights use incandescent lamps, with just over 6% of homes using a CFL.
- Only 15% of all porch lights are equipped with some form of control device such as a motion detector, photocell, or timer.

A 1% product penetration by the LED hybrid luminaire would reduce California energy use by about 3.3 million kWh/year.[1]

## 3.2. Prototypes

The following prototypes are representative of the designs that have received subsequent development. Many other prototypes were developed but are not discussed in this report. The hybrid fixture prototypes paired LED technology with incandescent lamps; however, the fixtures may also use CFL lamps.

These prototypes used optical and thermal design elements identified earlier in this report (see sections on optical configurations and LED array design). All designs started with some form of existing exterior fixture modified to incorporate an LED optical array. This was a conscious decision made to increase the ease of manufacturability and the chances that the prototypes would achieve market development.

Included in each prototype description are photometric test results of the LED light output of each fixture. Output tests were performed with an integrating sphere and a goniophotometer.

### 3.2.1. Prototype 1: Wall pack Hybrid fixture – LED with incandescent

Key features of this prototype follow:

- Wall pack fixture. 2 x 3 watt Luxeon III white. (Figure 7 and 8)
- LED power usage: 7 watt (one LED = 4 watt)
- LED output: 122 lm
- Fixture efficiency: 92%

1. 28,443,000 sockets in California residential porch lights (Energy Commission report P400-98-004-VI, pg 56) with 230 kWh/year savings (as noted in Appendix B: Energy Analysis) for 5% of the fixtures.

Figure 7. Photo of prototype fixture

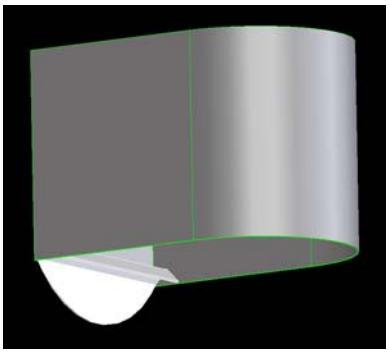

Figure 8. Solid model CAD drawing of fixture

As shown in Figure 9, the plot of the LED light has a flux directed back at the wall and down to the ground.

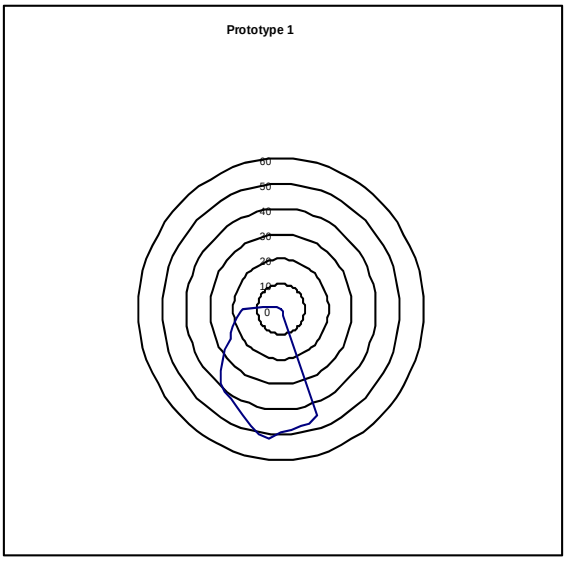


Figure 9. Goniometer plot

## 3.3. Prototype 2: Wall pack Hybrid fixture – LED with Incandescent

Key features of this prototype follow:

- Wall pack fixture. 8 x 1 watt Osram Golden Dragon (Figures 10, 11, and 12)
- LED power usage: 8.6 W (could be 4.4 watt)
- LED output: 101 lm
- Fixture efficiency: 90%

**Figure 10. Photo of prototype fixture**

**Figure 11. Solid model CAD drawing of fixture**

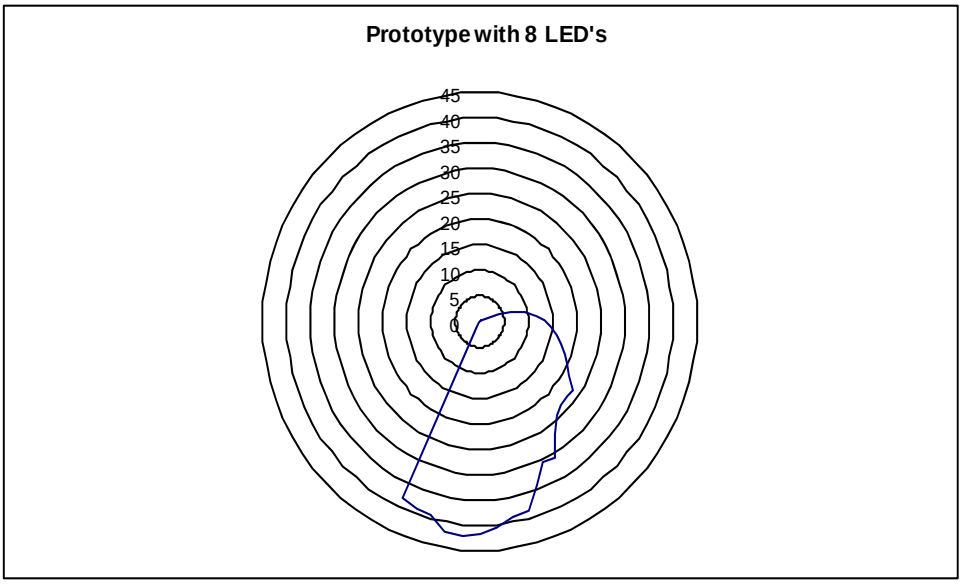


**Figure 12. LED Array output (wall on left side)**

### 3.3.1. Prototype 3: PAR lamp Hybrid fixture – LED with incandescent

Key features of this prototype follow:

- PAR lamp security fixture. 4 x 1 watt Osram Golden Dragon (Figures 13, 14, and 15)
- LED power usage: 4.4 W
- LED output: 61 lm
- Fixture efficiency: 91%

**Figure 13. PAR security lamp; LED off**

**Figure 14. PAR security lamp; LED on**

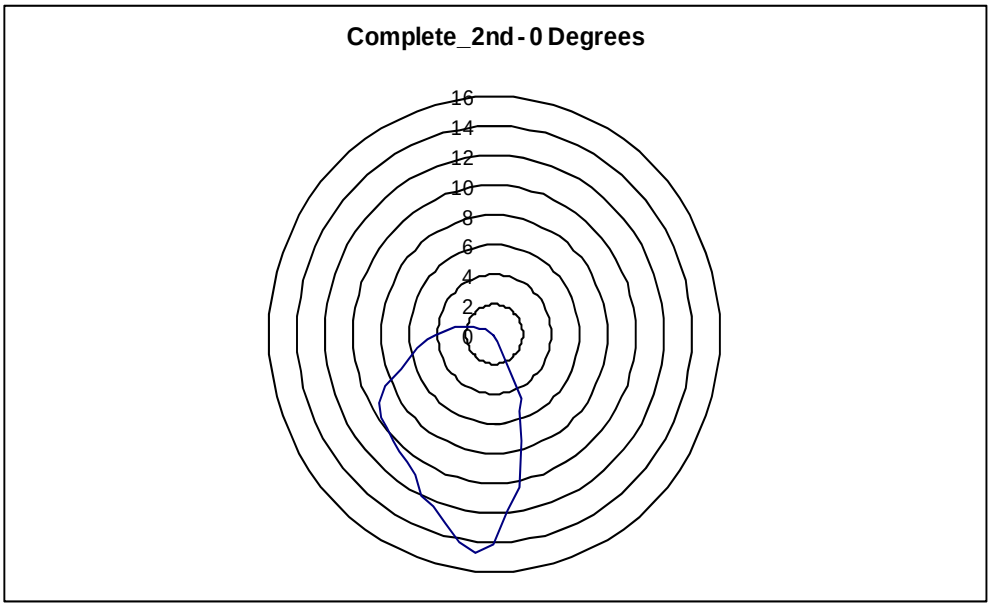


**Figure 15. LED array output (wall on right side)**

## 3.4. Laboratory Tests

The research team performed thermal tests with the different methods of array/heatsink attachment to evaluate which method was appropriate for use. The tests used similar and, where possible identical, heatsinks to determine the steady-state LED chip junction temperature under typical operating conditions (see Table 2).

The tests used the following thermal materials:

- 3M Thermal Transfer Tape # 8810
- Aavid Ultrastick thermal grease
- Wakefield Delta Bond epoxy

The tests were performed under different ambient temperatures. Each heatsink was 3 x 4 inch .040 aluminum. Test results show pin temperature ranges for each array, as given in Table 2. The cathode pin of each LED package was electrically and thermally connected to the heatsink slug of the LED. The temperature of this pin corresponded to the chip junction temperature and could therefore be used to calculate the approximate temperature of the LED chip.

**Table 2. Heatsink temperatures**

| | | *Aavid UltraStick Thermal Paste* | *Wakefield Delta Bond 155* | *3M Thermally Conductive Tape* |
|---|---|---|---|---|
| sample 1 | Tambient=25°C | Pin Temp = 46–49 ° C | Pin Temp = 45–48 ° C | Pin Temp = 48–51 ° C |
| sample 2 | Tambient=22°C | Pin Temp = 43–44 ° C | Pin Temp = 43–45 ° C | Pin Temp = 44–46 ° C |
| sample 3 | Tambient=24°C | Pin Temp = 42–44 ° C | Pin Temp = 43–45 ° C | Pin Temp = 47–50 ° C |
| sample 4 | Tambient=25°C | Pin Temp = 46–49 ° C | Pin Temp = 46–49 ° C | Pin Temp = 47–52 ° C |

Using the thermal resistance of the chip to the heatsink of the individual LED package, the researchers calculated the maximum chip junction temperature with any of the methods used to be 78° C. The maximum allowable chip junction temperature for this device is 125° C, so the researchers concluded that any of the above methods would be suitable for use in heatsinking these arrays.

## 3.5. Field Tests

As of the writing of this report, the field tests performed used the available laboratory prototypes manufactured during the development of the final fixture designs. Basic functionality tests were done with all of the prototypes and configurations, with no modifications made to improve performance.

Several final prototypes were displayed and functioned for a period of several months at CLTC. These units saw heavy foot traffic in excess of what would be anticipated for this design. Two units were tested at the homes of CLTC researchers and performed as expected. Another two units were installed at the Southern California Edison Lighting Center in Irwiindale, CA. During all of these tests, problems were identified and addressed as necessary. In addition to tests performed with completed fixtures, the individual components used in these fixtures were also tested in these and other products. The LED arrays operated continuously for up to six

months with no identified problems. The drivers and controls had been used in other commercial products and received testing from their own manufacturers.

## 3.6. Product Specification Overview

### 3.6.1 LED Hybrid fixture

The final specifications given in this report are for the LED Hybrid fixtures manufactured by Shaper Lighting. Current Specifications for The Watt Stopper Security Light are also provided.

There are two basic fixture models in production at the time of this report. The wedge fixture and the hooded lantern fixture are intended for wall mounting or can also be used as a post mount with available additional cedar (direct burial) post.

The basic specifications for these fixtures follow:

- Lamp/socket: One 60-watt A-19 lamp. INC socket fired ceramic rated for 660 watt and 250 volt. Lamps furnished by others.
- Installation: Supplied with a mounting bracket for a standard 4-inch J-box or stucco ring.
- Motion Sensor: WattStopper FS-155 lighting control. Timeout set range approximately 1 minute.
- LED driver: Xitanium LED Driver #120A0350C33F 350mA output @ 4 watt.

More detailed specifications can be found in Appendix A of this report.

### 3.6.2. PAR lamp security light

By the end of the project period, The Watt Stopper's security light design was not as progressed as the Shaper unit. That design, though, led to 3-dimensional drawings and solid model prototypes.

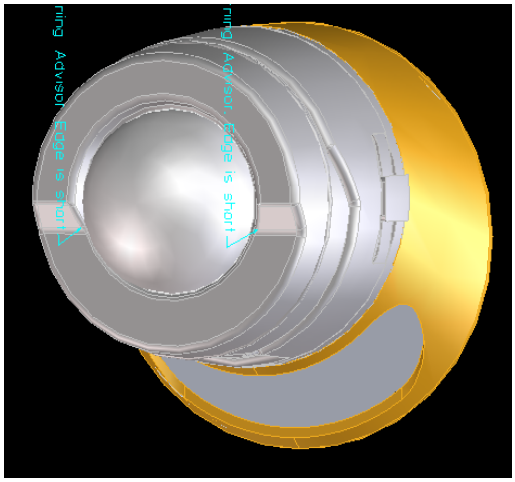


**Figure 16. PAR security lamp**

Figure 16 shows a drawing of The Watt Stopper unit without incandescent lampholders. The base portion shown in the drawing will house the lampholders and LED array. Figures 17 and 18 show the prototype PAR security fixture with LED lights on and off, respectively.

**Figure 17. Solid model prototype with LEDs on and PAR lamps off**

**Figure 18. Solid model prototype with LEDs off and PAR lamps on**

## 3.7. Market Connections

CLTC and Southern California Edison's Southern California Lighting Technology Center have demonstrated an LED Hybrid fixture on display to hundreds of visitors. CLTC sent fixtures for display to Pacific Gas and Electric, Sacramento Municipal Utility District (SMUD), San Diego Gas and Electric and the San Diego Regional Energy Office as well. Shaper Lighting made its fixtures commercially available in 2005.

As part of PIER-sponsored field studies of energy-saving technologies for the University of California/California State University (UC/CSU) system, UC Davis installed about 50 of The Watt Stopper's PAR fixture for field studies provided by the LED Hybrid project.

SMUD placed 50 Shaper units, the 685 Hooded Lantern style, in the Woodburn Apartments in Sacramento and monitored their energy use for about 2 months to establish energy use patterns. Follow up surveys of the apartment tenants were intended to determine user acceptance.

CLTC provide 30 more units, both the 685 Hooded Lantern and the 682 Wedge fixture types, to the National Parks Service for demonstration in National Parks and other locations. The National Park Services Regional Energy Manager, Steve Butterworth, assisted in choosing and coordinating the test site(s).

# 4.0 Other Considerations

LEDs are difficult to quantify using metrics typically applied for incandescent, fluorescent, and metal halide lamps. Such considerations are summarized below.

## 4.1. LED Efficacy

With the hybrid fixtures and the concrete-mount LED pathlight, it was questionable whether the performance of these LED fixtures is good enough 'on paper' to fulfill the high efficacy requirements of the 2005 California Title 24 Energy Efficiency Standards for Residential and Nonresidential Buildings. Specifically, Title 24 requires a lamp efficacy of 40 lpw, and LEDs at present provide only around 25 lpw. The requirement for a minimum bare-lamp efficacy favors omni-directional lamps such as CFLs that have high bare lamp efficacies but lower application efficacies (because the reflector required typically reduces efficacy by 20–60%). Alternative methods of quantifying luminaire efficiency, such as the Luminaire Efficiency Rating might be more equitable because such alternatives *do* account for reflector losses.

However, the ability of point sources such as tungsten halogen lamps and LEDs to project lumens efficiently toward a target is generally not recognized by luminaire efficiency metrics. The lack of a measure for this beneficial feature is a major barrier to the use of potentially efficient fixtures.

One solution would be to define "application efficacy", or the number of lumens that arrive at a target, divided by the power consumed by the fixture. No standard measure of application efficacy currently exists, except for the "cone diagrams" for spotlights that give the diameter of the pool of light at various distances from the fixture and the average illuminance within this pool of light. Application efficacy would have to be calculated differently for each application.

## 4.2. LED Color Rendering

Color rendering is an important issue in lighting. The poor color rendering of CFL lamps (despite CRI values in excess of 80) is widely believed to contribute to low acceptance for CFLs in the residential market (differences in chromaticity are also believed to be a factor). Manufacturers interested in commercializing LED luminaires for the residential market should therefore pay very close attention to the color quality of the light sources and not rely on CRI as a guide.

Because LEDs are not always optimized to score well on the color rendering index, their CRI values vary widely. Many LED manufacturers do not give CRI figures for their LEDs. However, Lumileds, for instance, produces 'warm white" LEDs with CRI values between 70 and 90, and a paper by Shakir and Narendran quotes measured CRI values as low as 48 and as high as 80. To compare, triphosphor fluorescent lamps typically score between 80 and 85, and incandescents score 100 by definition, since they are one of the standards by which other lamps are judged.

CRI is intended as a measure of how accurately a light source allows the colors of illuminated surfaces to be judged. It is a very simple system and, although very widely used, has not been extensively tested against subjective judgments of overall color quality. CRI may also not be

suitable as an indicator of other qualities, such as 'colorfulness,' which may be equally important as color accuracy in many applications. Shakir and Narendran found that LEDs with low CRI values were judged to be more colorful than LEDs and other light sources with higher CRI values. A similar effect can be seen with neodymium-doped incandescent lamps. One example is GE's Reveal product, which has a lower CRI value than a regular incandescent lamp but is often judged to produce more vibrant color.

Although there has been no conclusive evidence of the shortcomings of CRI, there is widespread skepticism among the research community about its usefulness, and further research is ongoing. The International Commission on Illumination (CIE) published a document in 1997 establishing a set of standards for LED photometry. These standards, TC2-45 *Measurement of LEDs - Revision of CIE 127* and TC2-46 *CIE/ISO standards on LED intensity measurements*, are under continuing review by CIE committees. Some of this research work is being carried out at National Institute of Standards and Technology (NIST).

## 4.3. End-User Acceptability

The suitability of this fixture for the residential market is predicated on the assumption that homeowners will accept the fixture as long as the LED provides illumination sufficient to provide coverage to the wall and ground area adjacent to and under the fixture. This is a photometric, rather than an aesthetic, requirement, and it assumes that the purpose of the luminaire is to provide functional illumination (for security or way-finding) of the ground and the wall, rather than to contribute to the night-time appearance of the building.

Homeowners' reasons for buying porch lights and other exterior fixtures are not well understood, and it seems likely that homeowners require both functional and aesthetic criteria. No research has been conducted in this area. The commercial outdoor lighting, in contrast, is much better understood. Furthermore, since residential outdoor fixtures are rarely sold directly by the manufacturer, manufacturers have only a second-hand understanding of homeowner reasons for buying these fixtures, or their reasons for either keeping fixtures, returning them to the store, or disposing of them. Consequently, there is little understanding of the market for residential outdoor fixtures even among key market actors.

Some basic research into the key aesthetic and performance criteria that homeowners look for would clarify whether the appearance and the photometry of the current LED units are appropriate or whether a different design would make this fixture better suited to its target market.

## 4.4. Title 24 Standards

Commercial and institutional exterior, porch, and perimeter lighting employing lamps with greater than 100 watts are directly addressed by the current California Title 24 energy standards. These are considered permanently installed luminaires, which must either be high efficacy (i.e., lamp efficacy of at least 60 lpw), or be controlled by a combination of motion control devices and photocontrols. Also, residential lighting requirements have a provision that calls for high-efficacy light sources or motion sensors on porch lights.

The 2005 Title 24 standards include similar provisions that require either high efficacy lighting or occupancy sensor–based control. Thus, LED light fixtures without occupancy sensors currently will not qualify for the outdoor lighting requirements. However, integrating daylight and occupancy sensing features, along with the combination of LEDs during non-occupied hours and a high-efficacy source (such as a CFL) when there is occupancy, would help this product meet the code requirements.

Absent an astronomical time clock or daylight sensing, the LEDs would remain on during daytime hours too, which would affect the potential energy savings from the product on a daily and seasonal basis. For this reason the project recommends use of a photocell to control the LED segment.

# 5.0 Current Status and Next Steps

Beyond the PIER-sponsored UC/CSU field study at UC Davis, additional campus may participate in field demonstrations. The National Park Service is at present in the process of undertaking its own field demonstration(s).

Currently, Shaper does not list the fixture in its catalog. A follow-on study of alternative LED hybrid designs began at CLTC in 2006. Figures 19 illustrates the prototypes of porch lights being evaluated by CLTC. As part of that project a manufacturer has also come forth to explore use of the concept in lighted bollards.

**Figure 19. LED Hybrid porch light under evaluation at CLTC.**

When the project concluded, The Watt Stopper PAR Lamp LED security light was under development. Solid model prototypes had been fabricated for testing and development. Tooling had been designed for the plastic injection molded parts. The electronics for the system were intended to integrate the motion sensing controls and LED driver circuitry on one circuit board, to result in cost savings.

# 6.0 Conclusions and Recommendations

## 6.1. Conclusions

Aiming to produce an energy efficient alternative for outdoor entry and walkway lighting, the CLTC research team generated 10 luminaire concepts and developed four prototypes. The team then successfully built two pre-production prototypes—a Hybrid LED fixture and a PAR security light. The hybrid fixture was made commercially available from Shaper Lighting, and the PAR security light was underdevelopment by The Watt Stopper in 2005. In addition, other manufacturers are considering production of similar products.

Using LEDs together with occupancy sensors is an excellent application for outdoor lighting. This combination provides low-level ambient lighting all night long, switching to full light level only when needed. The LEDs use only about 0.06 kWh per night, costing less than $0.01 per night. Because of the low usage, comparisons with incandescent lamp fixtures show more cost effectiveness than comparisons with compact fluorescent fixtures for full light level, with the marginal payback for the CFLs at about 10 years. Though CFLs have a long marginal payback because of such low usage, intermittent use of CFLs is not the best application because a CFLs warm-up time causes dim conditions and reduces user satisfaction for the very short period of illumination need.

## 6.2. Recommendations

For future efforts, the research team recommends that other manufacturers adopt LED lighting components for specialty applications, such as outdoor fixtures using occupancy sensors and photocells. In particular, mass-market applications at lower cost than the semi-custom Shaper units could stimulate wide-spread use of hybrid-type fixtures. However, the research team recommends assisting manufacturers in adopting LED technology because, although relatively simple to use, it is new to many lighting manufacturers and can present technical challenges in system design and application.

## 6.3. Benefits to California

A 2000 survey conducted by RLW Analytics of 1000 California homes found that roughly 80% of exterior residential lights use incandescent lamps, just over 6% of homes used a CFL for exterior lighting, and only 15%of all porch lights are equipped with some form of control device, such as a motion detector, photocell, or timer.

Based on the above findings and an estimated 28,443,000 sockets exist in California residential porch lights, researchers predicted that a 1% market penetration of the LED Hybrid could yield statewide energy savings of approximately 65,000 megawatt-hours (MWh) per year. Demand savings would reach 15 megawatts (MW).

Alternatively, California Energy Commission data shows 3055 MW and 21,737 gigawatt-hours (GWh) used in residential lighting. Assuming 11% is for outdoor lighting and using 1% market penetration for the hybrid fixture, the energy savings would be 20,150 MWh per year. Demand savings would be 2.4 MW.

Statewide energy impacts from a commercial version of this product were not calculated, but are also expected to be significant.

# 7.0 Glossary

| | |
|---|---|
| CFL | compact fluorescent lamp |
| CIE | International Commission on Illumination |
| CLTC | California Lighting Technology Center |
| CRI | color rendering index |
| CSU | California State University |
| Energy Commission | California Energy Commission |
| GWh | gigawatt-hour |
| LED | light-emitting diode |
| lm | lumen |
| lpw | lumens per watt |
| mcpcb | metal core printed circuit board |
| MW | megawatt |
| MWh | megawatt-hour |
| NIST | National Institute of Standards and Technology |
| PIER | Public Interest Energy Research |
| SMUD | Sacramento Municipal Utility District |
| UC | University of California |
| W | watt |

# Appendix A: Detailed Product Specifications

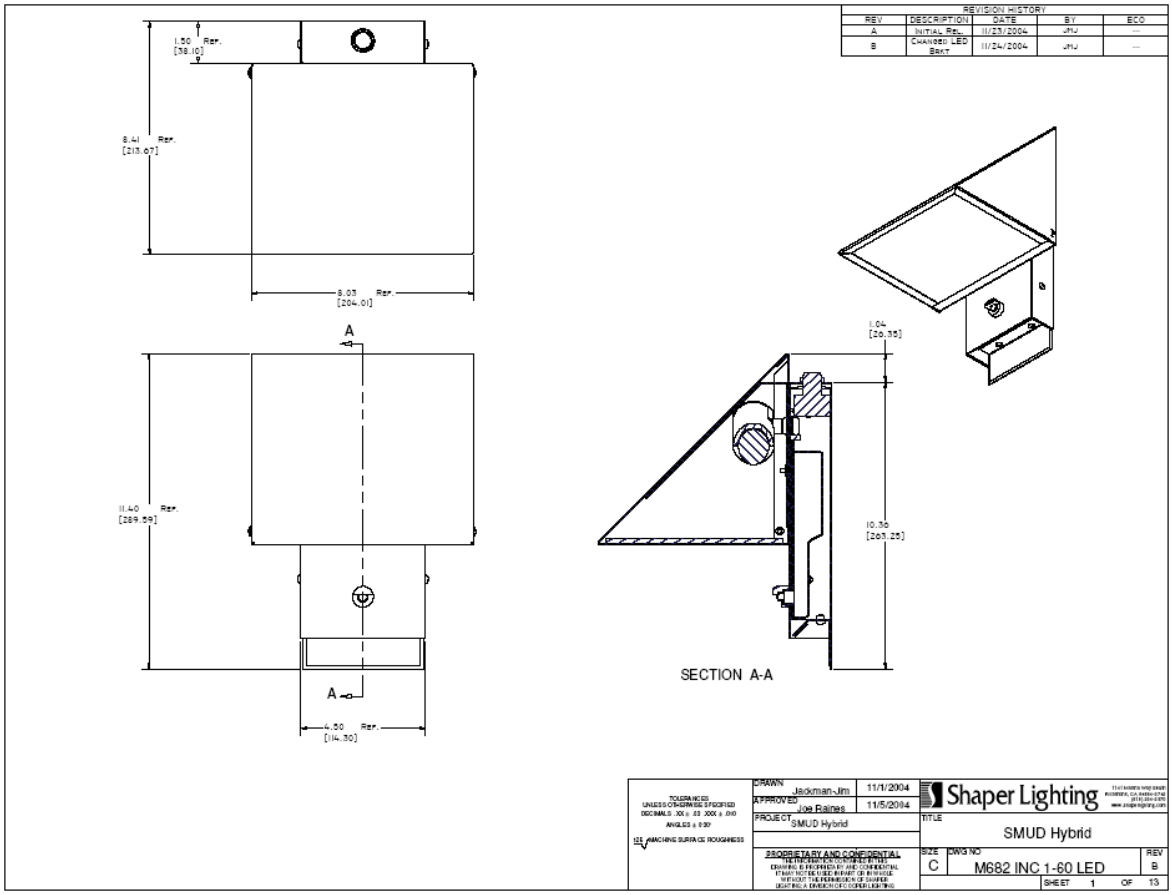


**M682 LED Hybrid 'Wedge' Wall Mount Fixture**
**Specifications**

*Material*

Solid Bronze. 1/8" White Acrylic Diffuser

*Finish*

Natural Bronze. Note: Bronze will weather to a dark bronze patina

*Lamp/Socket*

One 60 watt A-19 lamp. Incandescent socket fired ceramic rated for 660W – 250V. Lamps furnished by others

*Installation*

Supplied with a mounting bracket for a standard 4" J-box or stucco ring.

*Motion Sensor*

WattStopper FS-155 lighting control. Timeout set range 30 sec-30 min

*LED driver*

Xitanium LED Driver #120A0350C33F 350mA output @ 4W

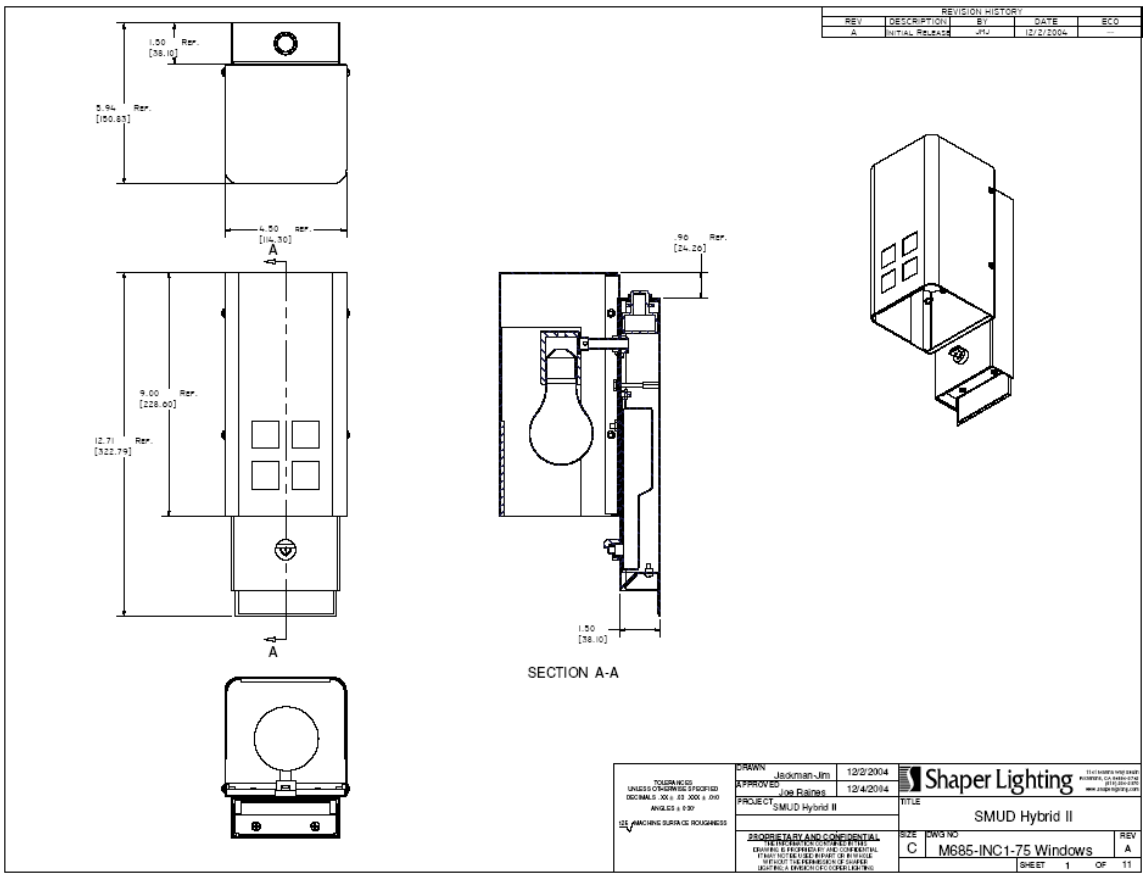


**M685 LED Hybrid 'Hooded Lantern' Wall Mount Fixture**
**Specifications**

*Material*

Solid Bronze.

*Finish*

Natural Bronze. Note: Bronze will weather to a dark bronze patina

*Lamp/Socket*

One 60 watt A-19 lamp. Incandescent socket fired ceramic rated for 660W – 250V. Lamps furnished by others

*Installation*

Supplied with a mounting bracket for a standard 4" J-box or stucco ring

*Motion Sensor*

WattStopper FS-155 lighting control. Timeout set range 30 sec-30 min

*LED driver*

Xitanium LED Driver #120A0350C33F 350mA output @ 4W

# Appendix B: Energy Analysis

**LED HYBRID FIXTURE ENERGY ANALYSIS**

| *Scenario* | *Lamp #1* | | | | | *Lamp #2* | | | | | *Total* | |
|---|---|---|---|---|---|---|---|---|---|---|---|---|
| | *type* | *W* | *hr/night* | *kWh/yr* | *$/yr* | *type* | *W* | *hr/night* | *kWh/yr* | *$/yr* | *$/yr* | *%* |
| 1. Base Case | Inc | 60 | 12 | 263 | 34.16 | n/a | 0 | 0 | 0 | 0.00 | $34.16 | 100% |
| 2. Base w/occ | Inc | 60 | 0.5 | 11 | 1.42 | n/a | 0 | 0 | 0 | 0.00 | $1.42 | 4% |
| 3. CFL | CFL | 16 | 12 | 70 | 9.11 | n/a | 0 | 0 | 0 | 0.00 | $9.11 | 27% |
| 4. CFL w/occ | CFL | 16 | 0.5 | 3 | 0.38 | n/a | 0 | 0 | 0 | 0.00 | $0.38 | 1% |
| 5. LED w/inc | LED | 5 | 12 | 22 | 2.85 | Inc | 60 | 0.5 | 11 | 1.42 | $4.27 | 13% |
| 6. LED w/CFL | LED | 5 | 12 | 22 | 2.85 | CFL | 16 | 0.5 | 3 | 0.38 | $3.23 | 9% |
| 7. x-over #5 vs #3 | LED | 5 | 12 | 22 | 2.85 | CFL | 16 | 8.25 | 48 | 6.26 | $9.11 | 27% |

**Marginal Payback: LED w/incandescent vs. LED w/CFL**

| | |
|---|---|
| $1.04 | /yr additional savings |
| $10.00 | additional cost (est) |
| 9.6 | years simple payback |

**Cross-Over Analysis**

| | |
|---|---|
| Hybrid LED w/inc vs CFL w/cont. operation | -- LED Hybrid always has lower energy cost until the occupancy sensor requires 8.25 or more hours/night of usage |

**Notes:**

| | |
|---|---|
| 16 | W total use for 13-W CFL lamp plus ballast (Advance Smart Mate ballast) |
| $0.13 | /kWh |
| occ = | occupancy sensor |
| 0.5 | hr/night use w/occupancy sensor |
| Concerns w/CFL w/occ | 1. long (1-2 minutes) warm-up is adverse for quick, short-term use |
| | 2. excessive starting can reduce lamp life |