Arnold Schwarzenegger,
Governor

LIGHTING RESEARCH PROGRAM PROJECT 3.2 ENERGY EFFICIENT LOAD-SHEDDING LIGHTING TECHNOLOGY

PIER FINAL PROJECT REPORT

Prepared For:
California Energy Commission
Public Interest Energy Research Program

Prepared By:
Lighting Research Center

February 2008

CEC-500-2005-141-A6

Prepared By:
Lighting Research Center
Andrew Bierman, Project Lead
Troy, New York 12180

Managed By:
Architectural Energy Corporation
Judie Porter, Program Director
Boulder, Colorado 80301
CEC Contract # 500-01-041

Prepared For:

California Energy Commission

Public Interest Energy Research (PIER) Program

Michael Seaman
Contract Manager

Norm Bourassa
Building End-Use Energy Efficiency Team Lead

Daryl Mills
Office Manager
ENERGY EFFICIENCY RESEARCH OFFICE

Martha Krebs, Ph.D.
Deputy Director
ENERGY RESEARCH AND DEVELOPMENT DIVISION

Melissa Jones
Executive Director

DISCLAIMER

This report was prepared as the result of work sponsored by the California Energy Commission. It does not necessarily represent the views of the Energy Commission, its employees or the State of California. The Energy Commission, the State of California, its employees, contractors and subcontractors make no warrant, express or implied, and assume no legal liability for the information in this report; nor does any party represent that the uses of this information will not infringe upon privately owned rights. This report has not been approved or disapproved by the California Energy Commission nor has the California Energy Commission passed upon the accuracy or adequacy of the information in this report.

This report is dedicated to the memory of Don Aumann,

the California Energy Commission's

Lighting Research Program Project Manager from 2002–2005.

Don was the consummate engineer, dedicated to energy efficiency and his work. Most important, he was a wonderful family man and friend. He will be missed.

Don Aumann

June 17, 1959 – March 9, 2007

Acknowledgments

The research, outcomes, and product development presented in this report are a result of funding provided by the California Energy Commission's Public Interest Energy Research (PIER) program's Lighting Research Program (LRP) on behalf of the citizens of California. Architectural Energy Corporation acknowledges the support and contributions of the individuals below:

Project Director: Andrew Bierman, Lighting Research Center

Technical Assistance: Yukio Akashi, Terry Klein, Mark Dyble and Peter Morante, Lighting Research Center; Michael Williams and Joseph Parisella, OSI; George Bilenko, Intech21

Element 3 Lead: George Loisos, Loisos + Ubbelohde

Program Advisory Committee: Ron Lewis, Department of Energy; Jerry Mills, Easy Lite; Gregg Ander, SCE; Bill Daiber, WFD Associates; James Bryan, Arden Realty; Neall Digert, Solatube; Jim Benya, Benya Lighting; Dennis Tiede, Sempra Utilities; Noah Horowitz, Natural Resources Defense Council; Amy Cortese, Northwest Energy Efficiency Alliance; Pekka Hakkarainen, Lutron; Peter Turnbull, Pacific Gas and Electric Company; Michael Waxer, Carmel Development Co; Kit Tuveson, Tuveson & Associates; David Kaneda, Integrated Design Associates, Inc; Connie Buchan, Sacramento Municipal Utility District.

Program and Contract Management: Judi Efhan, Nancy Jenkins, Ann Peterson, Steve Williams, Sunni Chacon, and Michael Seaman, California Energy Commission; Karl Johnson, California Institute for Energy Efficiency; Eric Stubee, SAIC; Don Frey and Judie Porter, Architectural Energy Corporation; Don Aumann, California Lighting Technology Center; Holly Larsen, Larsen Communications.

Please cite this report as follows:

Bierman, Andrew. 2007. *Lighting Research Program Project 3.2 Energy Efficient Load-Shedding Lighting Technology*. Lighting Research Center and Architectural Energy Corporation for the California Energy Commission, PIER Building End-Use Energy Efficiency Program. CEC-500-2005-141-A6.

Preface

The Public Interest Energy Research (PIER) Program supports public interest energy research and development that will help improve the quality of life in California by bringing environmentally safe, affordable, and reliable energy services and products to the marketplace.

The PIER Program, managed by the California Energy Commission (Energy Commission), conducts public interest research, development, and demonstration (RD&D) projects to benefit the electricity and natural gas ratepayers in California.

The PIER program strives to conduct the most promising public interest energy research by partnering with RD&D entities, including individuals, businesses, utilities, and public or private research institutions.

PIER funding efforts are focused on the following RD&D program areas:

- Buildings End-Use Energy Efficiency
- Energy-Related Environmental Research
- Energy Systems Integration
- Environmentally Preferred Advanced Generation
- Industrial/Agricultural/Water End-Use Energy Efficiency
- Renewable Energy Technologies
- Transportation

Lighting Research Program Project 3.2 Energy Efficient Load-Shedding Lighting Technology is one of three final reports for the Demand Responsive Lighting Systems Element of the PIER Lighting Research Program (contract number 500-01-041). This project was conducted by the Lighting Research Center and managed by Architectural Energy Corporation. This report is an appendix to the final report for the PIER Lighting Research Program conducted by Architectural Energy Corporation. The information from this project contributes to PIER's Building End-Use Energy Efficiency program.

For more information about the PIER Program, please visit the Energy Commission's website at www.energy.ca.gov/pier/ or contact the Energy Commission at 916-654-5164.

Table of Contents

Preface iii
Abstract ix
Executive Summary 1
1.0 Introduction 3
1.1. Managing Electrical Demand 3
1.2. Lighting as a Demand Resource 3
1.3. The Need for New Lighting Technology 4
1.4. The Load-Shedding Ballast Solution 5
2.0 Market Research 7
2.1. California Focus Group 7
2.2. Roundtable of Distributed Resources, Utilities, and Lighting Experts 8
2.3. California Energy Impact 10
2.4. Conclusions and Recommendations Regarding the Load-Shedding Ballast Design 13
3.0 Economic Analysis 15
3.1. End-use Customer Return on Investment Analysis 15
3.2. Utility Total Resource Cost Test for California 17
4.0 Specification Development 19
4.1. Industry Input 19
4.2. Draft Specification 20
4.3. Justification and Discussion of the Specification 22
5.0 Technology Development 33
5.1. Dimming Instant Start–Operated Lamps 33
5.2. Power Line Carrier Signaling 44
6.0 Testing 61
6.1. Lamp Life when Dimming Instant-Start Operated Lamps 61
6.2. Previous Instant-Start Dimming Work 64
6.3. Design of Life Test 66
6.4. Conclusions 74
6.5. Power Line Carrier Receiver Testing 75
7.0 Conclusions and Recommendation 87
7.1. Conclusions 87
7.2. Recommendations 87
7.3. Benefits to California 88
8.0 References 89

9.0 Glossary 91
Appendix A: Load-Shedding Roundtable 1
Appendix B: Economic Analysis for Utility and End-Use Customers 1
Appendix C: Power Line Communication Companies and Products 1
Appendix D: Circuit Schematic and Bill of Material for Load-Shedding Add-on Prototype . 1
Appendix E: Circuit Schematic and Bill of Material for Superheterodyne, Radio-based, Add-on, Load-Shedding Prototype 1
Appendix F: PLC Signal Reception Testing 1

List of Figures

Figure 1. Typical background noise levels for power lines (Van der Gracht 1985) 28
Figure 2. Power line noise spectrum from common appliances (Dostert 2001) 29
Figure 3. Switched capacitor dimming of instant start–operated lamp 35
Figure 4. Dimming circuit of load-shedding add-on prototype 41
Figure 5: Current drive of SSRs 43
Figure 6. Timing diagram for subharmonic synchronous detection of PLC signals 50
Figure 7. Block diagram of load-shedding receiver 51
Figure 8. Line coupling circuit 52
Figure 9. Tuned amplifier circuit 53
Figure 10. Frequency response of tuned transistor amplifier 53
Figure 11. Signal rectification and low-pass filtering circuit 54
Figure 12. Synchronous detection circuit 55
Figure 13. Digital portion of receiver circuit 56
Figure 14. Power supply circuit for load-shedding receiver and dimming control circuits 57
Figure 15. Complete load-shedding add-on device using the synchronous detection method ... 59
. 59
Figure 16. Complete load-shedding add-on device using the superheterodyne radio chip receiver. 59
Figure 17. DOE-funded instant-start life test started prior to this project 66
Figure 18. Lamp failures for continuous operation at low currents for different lamp manufacturers 68
Figure 19. Lamp life versus continuous operating lamp current 69

Figure 20. Schematic showing the timing of the cycling experiment 71

Figure 21. Lamp failures for lamps operated on full/dim cycles 71

Figure 22. Median lamp life for different lamp currents and full/dim cycling periods 73

Figure 23. Power line carrier signal measured at test bench 76

Figure 24. Power line carrier signal measured at remote location (grad studio) 77

Figure 25. Power line carrier signal measured at remote location (3rd floor conference room) 78

Figure 26. Ceiling of load-shed lighting demonstration area 81

Figure 27. Circuit layout of demonstration test area 82

Figure 28. Photograph of fixtures in demonstration area showing open ballast compartment with the add-on load-shedding prototypes installed. 83

Figure 29. Website for initiating load-shedding signal remotely through an Internet website 84

Figure 30. Power line carrier transmitter incorporating web server and Ethernet interface (via RJ45 connector) for remote activation of load-shedding via a local area network 84

List of Tables

Table 1: Market size 11

Table 2: Market penetration (as percent of total market) 12

Table 3: Annual sales and demand reductions 12

Table 4. Cost savings to customer of installing load-shedding ballast technology based on electrical utility rate structures 16

Table 5. Relative efficacy of commercially available ballast types 23

Table 6. Comparison of fluorescent lamp ballast technologies* 64

Table 7. Median lamp life for continuous operation at very low lamp currents 68

Table 8. Calculations of lamp life for different load-shedding times and dim levels assuming a 20,000 hour lamp life for full light output operation 74

Table 9. Test results 79

Table 10. Electrical load distribution of demonstration area 81

Table 11. Phase distribution for each circuit in the demonstration area 85

Table 12. Individual circuit load with and without load shedding activated 86

Abstract

This report is an appendix to the final report developed under the Lighting Research Program, which supported the creation of new lighting technologies and products that can save energy, cut peak demand, and reduce air pollution for the residents of California. It comprised 15 research projects conducted in four major research areas and three market connection projects and encompassed both residential and commercial sectors, as well as outdoor lighting associated with buildings.

This report describes development of aload-shedding ballast—a device that combines electronic instant-start ballasts for fluorescent lamps with technology for remote signaling to allow on-command dimming of all lights in an area, reducing lighting power by 33 percent. The technology is intended to help utilities shed load (or decrease the demand for electricity) at minimum disruption and cost to customers. The ballast is signaled via a power line carrier so no additional wiring is required, keeping installation costs low. The device also maintains the highest available energy efficiency among competing ballast types. Based on an anticipated incremental cost of $9 per ballast and a national average of electric rates, the simple payback on investment is approximately three years for new construction, remodeling, and replacement markets, with much faster payback in areas of the country where demand shortages frequently occur.

To commercialize the load-shedding ballast, the LRC is partnering with a large ballast manufacturer.

Keywords: wireless load-shedding ballast, energy efficient lighting, electrical demand response, cost-effective demand response, dimming instant-start, power line carrier

Executive Summary

Background

In an effort to eliminate blackouts and their potentially crippling economic effects, electric utilities offer financial incentives to businesses that reduce loads when supply is not sufficient to meet demand. Most of these incentive programs, called demand response programs, require participants to shed at least 100 kilowatts (kW)—a requirement that calls for major action, such as manually turning off lights and adjusting thermostats (New York Independent System Operator 2001). However, turning off lights manually is inconvenient and disruptive to employees—and at the end of the crisis, manual intervention is needed to turn the lights back on.

Purpose

This project developed a technology, called the load-shedding ballast, that provides businesses a convenient and low-cost means of reducing electricity power use without disrupting employees during times of peak electric demand.

Objectives

- Conduct focus groups to determine customer needs and preferences related to demand response programs and technologies.
- Analyze the technical issues on to the use of the instant-start ballast platform for dimming
- Conduct experiments to determing the effects of power reductions on lamp life
- Develop the load-shedding ballast specifications and circuitry

Outcomes

The research showed that customers accept lighting load-shedding technology that provides a reasonable return on investment and is easy to install, own, and maintain. Customers indicated they accept dimming levels of up to 50 percent for short (four-hour) periods of time.

Lamp life experiments showed that power reductions of 33 percent for periods when load shedding is needed have virtually no effect on lamp life. In light of this finding, and to make the power reduction comparable to systems that shut off one lamp in a group of three, the power reduction for the load-shedding ballast was set at 33 percent with a corresponding light level reduction of approximately 35 percent.

A switched capacitor circuit was successfully developed to reduce current to the lamps by approximately 35 percent to cause a power reduction of 33 percent. To signal the device, the LRC developed two power-line carrier (PLC) signaling methods: a heterodyne detection circuit based on an am radio receiver chip and a novel synchronous detection method using sub-line frequency harmonics. Both designs were constrained to contribute less than $2 to the manufacturing cost of the load-shedding

ballast. Laboratory testing showed that the synchronous method provided robust detection of signals broadcasted on the power lines and successfully instructed the ballasts to dim lights to produce the 33 percent reduction in power use.

Laboratory testing confirmed the technical feasibility of creating a load-shedding ballast based on an instant-start electronic fluorescent ballast platform—the lowest cost and most widely sold ballast today. Instant-start fluorescent systems also have some of the highest efficacies among the different ballast types. The load-shedding ballast developed dims fluorescent lighting in response to an external signal with virtually no effect on lamp life. The incremental cost to the customer is estimated at $9.00 per ballast, including all installation, set-up, and controller costs. With the estimated energy savings, the payback is approximately three years.

LRC partnered with OSRAM Sylvania (www.sylvania.com), a large ballast manufacturer, to commercialize the load-shedding ballast, and the company has produced a first batch of 500 ballasts. Of these, 150 were installed in a section of the library at University of California, Santa Barbara, in September 2006 for a several-month demonstration. Early tests showed that the ballasts effectively dimmed the lighting by one-third in response to a signal sent from outside the building. The ballast signaling device used in this project was developed by LRC.

Another 150 ballasts installed in a building in Rye, New York, that is owned by Consolidated Edison Company of New York, have also been successfully tested. The New York demonstration, which is also focused on development and testing of a commercial ballast signaling device, is being co-funded by the New York State Energy Research and Development Authority (NYSERDA).

The ballasts are expected to remain in the buildings at the close of the demonstration.

Benefits to California

Based on an expected peak lighting load reduction of at least one-third and a market penetration of 4 percent into the new construction and remodeling markets of the load-shedding lighting system developed by this project, LRC expects to reduce peak electric demand in California by 2.4 MW within three to five years of the commercialization of this system. This number will continue to grow each year and could represent load reductions of 100 MW in the future.

1.0 Introduction

1.1. Managing Electrical Demand

During recent summers, residents from New York to California have heard messages urging them to "take steps to reduce electricity consumption." (Murphy and Sullivan 2002). These pleadings are generally issued by Independent System Operators (ISOs), the independent bodies established to maintain a stable and reliable electricity grid. The messages are generated when utilities may not have enough power to meet consumer demand. These periods are referred to as times of "peak load" and pose a very real threat: if demand for electricity exceeds the supply, blackouts can result, interrupting businesses in a city, state, or even an entire region.

Because current technology cannot economically store large amounts of electricity in a useful manner, the amount of electricity generated must be greater than the consumption at all times in order to avoid blackout. The traditional response to managing peak load has been to build more power plants or transmission lines. This strategy has been successful at avoiding major blackouts, but has not eliminated the dangerously thin margin between peak demand and supply. In addition, an increasing number of cities and regions, notably Chicago and Long Island, have resorted to renting trailer-mounted generators to ensure adequate supply (Garceau 2000; McGinty 2002).

Building new generators concentrates on increasing capacity, but just as effective at preventing blackouts is working with the other side of the equation to reduce demand (Federal Energy Regulatory Commission 2001). Demand response programs—or programs that provide financial incentives to encourage businesses to reduce demand during peak periods—have emerged as a major means of reducing demand. Most demand response programs require participants to shed a minimum 100 kilowatts (kW). Thus, the majority of businesses that choose to participate in demand response programs have agreed to undertake major actions to reduce their load, such as shutting down an assembly line, starting-up a backup generator (which is frequently more polluting than a commercial power plant), or even shutting down an entire plant. The remainder of customers who choose to participate meet their requirements by manually turning off lights and adjusting thermostats (New York Independent System Operator 2001).

1.2. Lighting as a Demand Resource

A major deterrent to widespread use of demand response programs is the lack of opportunities for participation, unless a business is willing to make costly and disruptive changes to its normal operations. For example, shutting off or "dimming" computers and other building equipment for even short periods of time will cause major disruptions to business activities and employee productivity that have significant negative impacts to a business's bottom line. Shutting off another large load, air conditioning is problematic. After being shut off, an air conditioner can require many hours to bring a building back to the desired temperature, adding considerably to energy bills. Further, the amount of load shed by switching off air conditioning equipment depends on the time of day and weather conditions, making the amount of load shed unpredictable. Adjusting the thermostat decreases employee comfort and can damage equipment that relies on continuous cooling.

Lighting is a natural choice for use as a demand response resource. Using a building's lighting system to shed electric load has none of the drawbacks noted above. Lighting can be dimmed to a level that significantly reduces load, while still providing enough light to allow employees to continue their work with minimal impact. In fact, shedding lighting load has little effect on the company, other than reducing energy consumption and, of course, electric demand. And unlike air conditioning load reductions, the amount of load shed from lighting is predictable and repeatable.

Reducing lighting load offers other key benefits. The lighting load reduction is nearly immediate, occurring in less than a few minutes, which makes it useful for emergency response measures where the time needed to get additional generation or load reduction resources on-line is critical. Further, reducing the lighting load in turn reduces the cooling load, since lighting adds significant amounts of heat to a building. Reducing only about 10% of the lighting load during peak periods in California will decrease load by 400 megawatts (MW), which can cause a major decrease in prices and increases in grid stability.

In addition, because all business have lighting, most customers can participate. Rather than creating a scenario that requires a handful of companies to shut down an assembly line or forces society to bear increased pollution, load-shedding lighting systems allow nearly all customers to participate equally in reducing energy demand.

Thus, a demand-responsive lighting system can provide a simple, reliable, and painless way to decrease load. Millions of ballasts dimming millions of lights reduce load in a manner that will not impact productivity. Indeed, many people cannot even detect the change in light levels.

Developing a load-shedding lighting system that will be available for widespread implementation in California is critical to combating the growing negative impacts that rising electricity demand brings to California's economy and environment. Nearly every business in California uses electric lights, with lighting comprising 26% of a typical business' electricity consumption. During periods of peak load, air conditioners and other devices consume more energy than they do during normal conditions. However, lighting still comprises about 15 to 18% of the total electricity demand during peak load events. Based on an expected peak lighting load reduction of at least one-third and a market penetration of 4% into the new construction and remodeling markets for the load-shedding lighting system developed by this project, the Lighting Research Center (LRC) expects to reduce peak electric demand in California by 2.4 MW within three to five years of the commercialization of this system. This number will continue to grow each year and could represent load reductions of 100 MW in the future.

1.3. The Need for New Lighting Technology

Currently, lighting in most commercial buildings is controlled with manual on/off switching. Even buildings that have energy management systems typically neglect to include the building's lighting in the control scheme: only about 10% of building management systems have lighting as part of their control. California's energy code (Title 24) now requires multiple manual switches to control the lamps in a single light fixture. This feature allows users to switch off one or two of the lamps in a three-lamp fixture to reduce demand. However, the requirement covers manual switching only.

Even when lighting is connected to a building's energy management system, the system generally just turns off or on the lights at given times, acting like nothing more than a glorified time clock.

In today's buildings, using lighting to reduce electrical demand requires someone to manually turn off different lighting circuits either room-by-room at the wall switch or at the lighting panel. At the end of any load reduction period, someone has to return to each switch that was turned off and turn the lights back on. This method is thus time-consuming and costs money to execute. Since most commercial buildings are not wired to turn off some of the lamps within a given light fixture or some of the light fixtures within a given building area, it may be necessary to plunge portions of the building into darkness if lighting is used to reduce demand. This is not conducive to maintaining productivity within the workspace. In fact, most businesses will not jeopardize productivity to reduce the demand for electricity, since the losses in productivity far exceed any payment a utility or independent system operator could give the customer.

1.4. The Load-Shedding Ballast Solution

The goal of this project is to develop, test, and commercialize a system that will use a building's lighting equipment to shed electric load quickly, easily, and cost-effectively at times of peak demand without compromising the comfort, safety, or productivity of building occupants. To accomplish this goal, this project developed an easy-to-use, cost-effective load-shedding ballast that will lower the amount of electricity demanded by the building's lighting by one-third (by dimming some of the lamps in each fixture) in periods of peak demand in response a power line carrier (PLC) signal broadcast from within the building. LRC human factors research has shown that this amount of dimming is imperceptible to many people and is considered acceptable to the vast majority of people. Both dimming and restoration of lighting after the emergency period are automatic.

The load-shedding ballast developed therefore eliminates much of the hassle associated with using the building's lighting to reduce peak electric loads. As such, the device offers an alternative to the pricey, polluting, and inefficient policy of building new power plants to meet short-term spikes in electrical demand. Although dimming a single light bulb does not lead to a very large reduction in electricity demand, the ability to dim thousands of lights with the touch of a button gives these ballasts the equivalent of building several new generators. Being able to easily aggregate the widely distributed lighting load is the main point of this project.

LRC has worked with the lighting industry (lamp and ballast manufacturers) to build consensus about the development of a load-shedding lighting system that will significantly reduce electric load, be low-cost, and not compromise the life of fluorescent lamps. When commercialized, the device is expected to have an incremental cost of approximately $9.00 over a standard instant-start ballast.

Further development of the signaling device is being conducted by LRC under a grant from New York State Energy Research and Development Authority (NYSERDA). This grant also includes putting all the pieces together (a signal received from a utility to shed load which is then passed onto the load-shedding ballasts to dim lamps by 33%) to demonstrate and evaluate the effectiveness of a load-shedding lighting system.

It's important to note the signal path that initiates the broadcast PLC signal was not a focus of the study described in this report. That signal to shed load can originate from within the building or externally from an ISO, utility, or other control center, and it can take advantage of the many forms of commercially available communications (e.g., internet, phone lines, wireless pager, radio).

2.0 Market Research

2.1. California Focus Group

A focus group of large building (greater than 100,000 square feet [ft^2]) owners, developers and tenants was held on March 5, 2003, in Sacramento, California. The focus group explored four issues.

- Electric load management during times of high electric usage
- The use of lighting systems to reduce electric loads
- The load-shedding ballast
- Communication issues

Customers indicated they wanted load management programs, in general, to have the following elements:

- Tangible customer benefits such as monetary payments (what's in it for the customer approach)
- Products to help control loads
- A simplistic (easy to understand and use) load management program
- First costs to install any needed control systems paid for by a utility
- A financing program for any equipment that a customer installed to control loads
- A short implementation period for participating in the program (rather than a long period of time (six months) needed to have the utility or others install equipment and get all the paperwork completed)

Focus group participants believed using the lighting system to reduce electric loads during times of peak usage is a good way to reduce electric demand. When asked why it was a good load to control, they indicated the following:

- There is so much lighting in use
- Simple to control
- Little or no impact on building occupants or operations if done correctly
- Takes less time to reduce lighting loads than other types of loads
- Payback is quicker

Participants were asked what attributes the load-shed ballast had to have to be used by customers. Following are their comments:

- The ballast must be low maintenance.
- Longevity of the ballast is a concern.
- The ballast must be cost-effective.
- Ballast operation must not cause lights to flicker when dimming.
- If the ballast fails, the lights must fail in the on position (100% light output).
- The ballast must be easy to install.
- The ballast must have an Underwriters Laboratory (UL) listing.

- The ballast must be easy to purchase (availability).
- The ballast must use a wireless signal.
- Other building signaling devices cannot interfere with the signal to the ballast.
- The ballast cannot reduce lamp life.
- The ballast must be compatible with other lighting equipment provided by other manufacturers.
- The ballast must fit into a standard light fixture.

Of these attributes, cost-effectiveness was the most important to the focus group participants.

Participants were asked what information they would require to purchase and use the load-shedding ballast system. The following are their responses:

- Affects of the system on the bottom line
- Specifics on how the system works
- Dimming standards
- The rebate amount
- The penalties for not shedding load
- Warranty information
- Case studies of other installations
- References
- Details on who controls the load
- Details on who supports the technology
- Length of required customer and utility commitment to the program
- Clear utility communications when load-shedding events occur
- Operating instructions

Participants also said that they found the utility to be the most trusted information source.

2.2. Roundtable of Distributed Resources, Utilities, and Lighting Experts

A roundtable was conducted on March 6, 2003, with utility representatives, lighting consultants, lighting and control equipment manufacturers, lighting researchers, members of the PIER Lighting Research Program, and representatives from state agencies. The goals for the roundtable were to discuss existing load management programs, compatible lighting technologies being developed by others, and the use of lighting systems to reduce electric peak loads. A final goal was to discuss and demonstrate the load-shedding ballast technology with this non end–user contingent.

When asked what would it take to include the load-shedding ballast in their load management programs, utility representatives responded as follows:

- The decision to include the load-shedding ballast and its companion retrofit device is largely financialy driven.

- The system must provide reliable and predictable load reductions to the utilities.
- Utility representatives present a portfolio of energy management tools and programs to their customers. This load-shedding technology would be just one of several offerings in their portfolio. The customer may be better served to re-lamp an entire facility and lower overall light levels rather than install the load-shedding device and see energy and demand savings only during peak periods.

Comments from other roundtable participants concerning utility-based load management programs included the following:

- Utilities still have generation capabilities that have not been not sold to third parties.
- It appears California's governmental bodies and utilities are returning to a more vertically integrated (regulated business) model for planning purposes.
- The utility rate schedules should reflect/encourage load-shedding capabilities.
- Utilities have the relationship with end-use customers.
- The required hours of load management are different throughout California and may be as high as 676 hours per year in some places to account for summer peak periods and meet tariff requirements.
- Pacifica Gas and Electric Company (PG&E) claims the gap between the peak load and average load is getting smaller. This may cause load shedding to be less acceptable.
- Two-way signaling is important to utilities because it allows them to ensure the load has been shed.
- Lighting control manufacturers will not start a product line based on utility incentives.
- Load shedding is not a strategy in itself. It needs to be part of a larger program of energy management strategies.
- The Energy Commission may want to explore a future research program that involves installing a switch on the "B" lighting circuit of a building to provide load shedding during peak energy periods. It could be part of a Title 24 code requirement.
- A critical peak pricing (CPP) rate is proposed for the three investor-owned utilities (IOUs) and could become effective in 2003. Information about the rate is available at http://www.energy.ca.gov/demandresponse/index.html.
- Marketing should focus on owner-occupied buildings because decision making is centered in one organization. In tenant-occupied buildings, building owners do not feel an obligation to install cost-reducing devices because many times the tenant pays the electric bill and receives the benefits, not the building owner.

Roundtable participants were asked why customers participate in current load management programs.

- A clear price signal is given to customers to reduce load.

- Customers feel an obligation to be good corporate citizens and assist in maintaining the integrity of the electric system.

Roundtable participants believe customers do not use their lighting systems exclusively to control loads because the control is not automated. Someone has to be sent to each lighting panel and manually turn off lights. When lights are reduced for load-shedding purposes, customers use switches or breakers to manually turn the lights off. Sacramento Municipal Utility District (SMUD) web-based system that can provide direct control of lighting systems.

All roundtable participants were asked to list the load-shedding ballast characteristics they would require the ballast to have.

- Long ramp period for dimming to preset limit
- No negative impact on customer productivity
- Flexibility on how to control/send the signal from the utility
- Compatibility with future technologies
- 20% total harmonic distortion
- No interference with other customer equipment
- A seal of approval beyond UL listing (such as ENERGY STAR®)
- Minimal impact on lamp life and no impact on manufacturer's warranty
- A device to limit number of hours per year in the dim mode
- Clear economic payback to the customer
- Lower life-cycle cost

2.3. California Energy Impact

2.3.1. Energy and demand savings potential

The load-shedding ballast and the retrofit device reduce demand during times of customer or utility peak electric loads. Each device will reduce approximately 30% of the connected fixture lighting load. Little or no energy savings is achieved at the building site. However, the ability to better manage load on the electrical grid may allow more efficient use of energy resources, which in turn could produce a grid-wide energy savings. This analysis focuses on demand reduction, so any potential grid-wide energy savings were not considered. The following indicates the demand reduction per load-shedding ballast (or add-on retrofit device) based on the number of lamps per lighting fixture.

- T-8, electronic ballast, 2-lamp fixture: 20 watts (W)
- T-8, electronic ballast, 3-lamp fixture: 30 W
- T-8, electronic ballast, 4-lamp fixture: 40 W

2.3.2. Sales and energy savings volumes

The primary markets for the load-shed ballast are new construction and remodeling of owner-occupied office buildings and public buildings. After a five-year ramp up period, the size of these combined markets approaches 500,000 load shed ballasts annually

nationwide and 40,000 ballasts annually within California. Demand reductions would increase by 15,000 kW nationally and 1,200 kW within California each year at the above sales estimates.

Other substantial markets exist for the load-shedding ballast but are not included as part of this analysis because of the difficulty or high marketing costs of reaching these markets. The commercial retail floor space is substantial. However, the primary business purpose of retail customers is to sell products from their stores. Dimming lights to save a minimum amount of money would not be acceptable if lost sales were encountered. Non-owner occupied office space is also substantial. However, the issue of who pays for the installation vs. who reaps the benefits—a systemic problem for many energy efficiency improvements in such buildings—would definitely be present for the load-shed ballast.

Market analysis is limited to the load-shedding ballast only. The retrofit device is not considered because its avoided costs are negative, as discussed in Section 3.0 Economic Analysis.

2.3.3. Market segmentation, size and price effects

The markets for the load-shed ballast are segmented into new construction and building remodeling/renovation. They are further segmented into owner-occupied office space and public buildings (Table 1). The national and California markets sizes are developed from Energy Information Administration and census data. New construction is based on the percent non-farm job growth (2.3% in the United States, 2.0% in California), which indicates that people need space to work. Remodeling estimates are based on existing floor space replacing light fixtures every 15 years for the office segment and 25 years for the public building segment.

Table 1: Market size

Segment	U.S.	California
New Construction		
Owner Occupied Offices	138,000,000 ft^2	18,000,000 ft^2
Public Buildings	246,000,000 ft^2	24,000,000 ft^2
Remodeling/Renovation		
Owner Occupied Offices	820,000,000 ft^2	52,500,000 ft^2
Public Buildings	492,000,000 ft^2	42,000,000 ft^2

Annual sales are a function of market penetration, which is directly affected by the acceptance of the load-shed technology and marketing efforts. For purposes of this analysis, LRC has assumed penetration rates that differ by year from the date of technology introduction and by market segment. It is believed momentum and acceptance of the new technology will build over time and that acceptance within the public building arena will be greater than within owner occupied office buildings.

Table 2 presents the percentages of market penetration by year and by market segment.

Table 2: Market penetration (as percent of total market)

	Offices	Public Buildings
Year 1	0.1%	0.5%
Year 2	0.5%	1.0%
Year 3	1.0%	2.0%
Year 4	2.0%	5.0%
Year 5	4.0%	8.0%

Annual sales nationally and within California are estimated on the basis of market size and penetration as stated above and the assumption that one ballast will be used for every 200 ft^2 of floor space. Based on this information and a demand reduction of 30 W per ballast, Table 3 provides estimates of load-shedding ballast sales and demand reductions for the U.S. market and for California.

Table 3: Annual sales and demand reductions

	U.S		California	
	Sales	Demand Reduced	Sales	Demand Reduced
Year 1	23,240	697 kW	2,002	60 kW
Year 2	60,890	1,827 kW	5,062	152 kW
Year 3	121,700	3,651 kW	10,125	304 kW
Year 4	280,300	8,409 kW	23,550	707 kW
Year 5	487,000	14,610 kW	40,500	1,215 kW

2.3.4. The buyer and other influencers

The buying decision makers are commercial building owners, especially of owner/occupied and public buildings. The decision will occur normally during the building design process for new and remodeled buildings. Building occupants may also be considered buyers for the retrofit device if it meets their economic criteria.

Building designers (architects, consulting engineers and lighting designers) play an important role of informing and educating building owners of the value of including load shedding into the building's lighting scheme.

The primary competitive product of the load-shed ballast is a lighting panel dimming control. The estimated cost of the load-shed ballast and panel dimming are comparable, however their operation differs. Panel dimming requires dimming of all lights associated with that lighting panel. In contrast, the load-shed ballast allows the customer to select which light fixtures they wish to dim. Panel dimming, which is commercially available, is not currently experiencing large sales volumes.

The load-shed ballast is a new and different technology. It needs the support of the utility industry to be successful. The utility industry needs assurances that the technology works and offers value to customers and the utility. This assurance can be attained through the development and evaluation of demonstration sites. Another concern is the warrantee of lamps being dimmed through an instant-start ballast technology. Will lamp manufacturers invalidate their warrantees? Discussions to date with the major lamp manufacturers indicate they are willing to stand behind their warrantees as long as the load-shed dimming hours are limited to approximately 100 hours per year.

The primary barrier to the load-shed ballast is cost-effectiveness. While the cost maybe well known, the benefits are uncertain from year to year. Each year will bring a different benefit from utilities or state-run load management programs based on the amount of curtailment necessary for that year. A customer wants and needs certainty for the return on an investment such as the load-shed ballast. Uncertainty will cause many customers not to buy.

2.4. Conclusions and Recommendations Regarding the Load-Shedding Ballast Design

Conclusions and recommendations listed below were drawn from the focus group and the roundtable results.

2.4.1. Conclusions

- Utility-sponsored load management programs must provide monetary payments to attract participating customers.
- Customer participation in utility-based load management programs has declined in recent years.
- To attract customers to load management programs, the cost to participate must be aligned with the benefits.
- Lighting is an excellent load to control because there is so much lighting and dimming has little impact on building occupants or operations if done correctly. Lighting also provides a predicable amount of load shedding.
- An ideal lighting control scheme must be easy to use and allow dimming of the lights from a single location.
- The load-shedding ballast and its companion retrofit device must be cost-effective and be easy to install.
- The load-shedding ballast must have a variety of characteristics: minimal impact on lamp life with no impact on manufacturer's warranty, a "good housekeeping" seal of approval beyond just a UL-listing (such as ENERGY STAR), a dimming signal that does not create interference with other customer equipment, and technical support of the ballast and signaling equipment after installation.
- Customers would accept 30% dimming of light output.
- Customers would allow utilities to control the load-shedding ballast directly if customers had override capabilities.

- Some type of cost/benefit analysis specific to the customer is required to achieve customer acceptance of the program.
- Customers want demonstrated proof that the load-shedding technology works.
- Customers look first to their utility for information regarding the load-shedding ballast and a related load management program and second to their trade associations.
- Customers do not want electronic communications about the load-shedding ballast or load management programs.

2.4.2. Recommendations

- The cost for load-shedding ballast or the companion retrofit device cannot exceed more than three years worth of customer monetary benefits from participation in utility-based load management programs. Equipment rebates may assist in increasing benefits to customers.
- The load-shedding ballast must not reduce lamp life significantly or fail in the full-on position. Signaling cannot interfere with other customer operations and the equipment must be easy to install by in-house personnel without special training. The load must controllable from a single location.
- LRC should concentrate its development efforts on the load-shedding retrofit device because of the substantial stock of existing commercial and industrial buildings.
- LRC must find a manufacturer with customer name recognition and an established distribution network to produce and obtain, as a minimum, a UL-listing for the load-shedding ballast and related signaling device. This manufacturer needs to provide follow-on technical support to customers after installation.
- A customer financial model must be developed that includes utility rate structures, rebates, and equipment costs to help utility representatives sell this load management program and to prove to customers the benefits of participating in such a program.
- Utilities should be allowed to market load management programs to customers, including the load-shedding ballast program, since they are the most trusted source of information in this area.
- Utilities or others should run demonstrations of the load-shedding ballast technologies in actual installations around California for interested customers to view.

The full report on the roundtable and focus groups conducted for market analysis is referenced in Appendix A of this report.

3.0 Economic Analysis

The economic analysis for the load-shedding ballast must be examined in two ways:

- The economic benefits for the end-use customer
- The avoided costs to the utilities and society in using the load-shedding ballast technology

3.1. End-use Customer Return on Investment Analysis

This analysis (shown in Table 4) compares the customer cost savings of applying the load-shedding ballast technology to the incremental cost of a conventional ballast. The savings are expressed on a per light fixture/ballast basis. Firm, interruptible, and load management rates of Southern California Edison (SCE), PG&E, San Diego Gas and Electric (SDG&E), SMUD, and Los Angeles Department of Water and Power (LADWP) were used to determine customer cost savings.

The load-shedding ballast has an incremental cost of $9 over that of the instant-start ballast. These prices include sharing the cost for the signaling device. Installing the retrofit device or load-shedding ballast into an existing light fixture is estimated to cost $10 per fixture. There is no incremental installation cost for a new light fixture with the load-shedding ballast installed and used in new construction or as part of a building's renovation.

Table 4. Cost savings to customer of installing load-shedding ballast technology based on electrical utility rate structures

Action	Rate	Annual Savings per Device
SCE		
Monthly Peak Demand Reduction	TOU-8	$3.48
Interruptible Rate	I-6-BIP	$2.52
Critical Peak Pricing Rate	TOU-8-CPP	pricing not available
PG&E		
Monthly Peak Demand Reduction	E-20S	$3.06
Interruptible Rate	E-BIP	$2.52
Demand Bidding	E-DBP	$1.05
Load Reduction	E-SLRP	$0.30
Critical Peak Pricing Rate	E-CPP	$3.96
SDG&E		
Monthly Peak Demand Reduction	AL-TOU	$3.08
Interruptible Rate	BIP	$2.52
Demand Bidding	DBP	$1.05
Load Reduction	SLRP	$0.30
Critical Peak Pricing Rate		pricing not available
SMUD		
Monthly Peak Demand Reduction	GS-TOU1	$1.51
Load Reduction	PowerNet	$0.75
LADWP		
Monthly Peak Demand Reduction	A-3, Rate C	$1.81
Real-Time Pricing	XRT	$4.17

Based on the above customer cost savings, the load-shedding ballast installed in light fixtures used in new construction or building renovations would essentially meet a three-year payback criteria. For retrofit applications, the installation cost of a load-shedding ballast in an existing light fixture essentially doubles the payback period to six years.

Certain rebate programs sponsored by the California Energy Commission (Energy Commission) can offset some of the initial capital cost for the purchase and installation of the load-shedding ballast or the retrofit device. One program, "Bring Me a Watt", will pay up to $250 per kW of peak load reduction. This is equivalent to $7.50 per load-shedding ballast.

The Energy Commission has identified exposing end-use customers to real-time electric prices as a priority in controlling peak electrical loads. Congress, in the Energy Policy Act 2003 legislation, also placed emphasis on real time pricing for businesses. Real-time prices could increase the economic advantage of the load-shedding ballast to the customer.

3.2. Utility Total Resource Cost Test for California

The load-shedding ballast and retrofit device are strictly demand reduction devices and do not offer additional energy savings over those offered by the use of electronic instant-start ballasts. Therefore, the use of the standard avoided cost values as prepared and approved by the California Public Utility Commission (CPUC) that reflect only energy savings and not demand reductions is inappropriate. LRC used information developed in the second report by Working Group 2 of Rulemaking on Policies and Practices for Advanced Metering, Demand Response and Dynamic Pricing to determine the cost-effectiveness of a demand response device such as the load-shedding ballast. (This report is available on CPUC's website.) Working Group 2's mission was to develop demand response tariffs and programs and to determine their cost-effectiveness.

Based on the methodology presented in the above referenced report, LRC found the load-shedding ballast to be cost-effective under the high avoided cost case and found the retrofit device to be not cost-effective under any case.

The full economic analysis for end-use customers and utilities is referenced in Appendix B of this report.

4.0 Specification Development

The specification of a load-shedding ballast began at LRC during fall 2001 as part of a project on lighting controls sponsored by the U.S. Department of Energy (DOE) (Lighting Research Center 2002). During this project, lighting was identified as a potential demand resource with very unique and desirable characteristics, as discussed in previous sections. At this time too, it was realized that the current offering of lighting controls and equipment was inadequate for achieving widespread use of lighting as a demand resource. In fact, analysis conducted for the DOE project on the status of fluorescent dimming revealed that dimming technology of any kind was not ready for full-scale implementation due to nagging technical issues and lack of standardization. The load-shedding dimming ballast was thought to be the best use of dimming for mainstream applications in the commercial and industrial markets because it offered a positive economic return and would require only a moderate amount of technical development. In short, it could be simple and effective.

4.1. Industry Input

Due to the high-volume nature of the ballast market and the desire for large-scale implementation to garner all the societal benefits of demand-responsive lighting, LRC researchers and others realized from the start that demand-responsive lighting would benefit greatly from industry standardization on the function of a load-shedding ballast and interoperability of load-shedding products. To this end, the LRC convened several roundtable-style meetings with lamp and ballast manufacturers during 2003 to gain industry acceptance and consensus on demand-responsive lighting, specifically, the load-shedding ballast.

Representatives from the following lamp and ballast companies participated in these meetings:

- OSI
- Advance Transformer
- GE Lighting
- Universal Lighting Technology
- Philips Lighting

The primary result of these meetings was a specific, guiding definition of lighting load-shedding for T8 fluorescent systems for commercial and industrial applications. The definition is given below.

4.1.1. Definition of load-shedding lighting

- **What:** A ballast specification for reducing power demand by dimming fluorescent lighting (T-8 lamps) from a centralized point of control.
- **Why:** To manage load on the electrical grid; used by electricity suppliers/grid operators as a substitute for power generating resources in times of critical peak system demand and for managing demand at any time for more efficient system operation and risk avoidance.

- **How:** Dimming and/or switching T-8 fluorescent lamps to reduce luminaire power input by 33% or 50% and aggregating those loads via a building-wide signaling system.

  There are two scenarios for control of dimming:

  - Scenario 1. Dimming is controlled by the electricity supplier/grid operator via remote signaling and distributed automatically to the luminaires (i.e., ballasts). Dimming times and payments are determined through negotiated contracts between the utility/grid operator and electricity customers. Payments to customers are based on minimizing the customer's electric demand while reducing operating risk for utility/grid operator.
  - Scenario 2. Dimming is controlled by the building owner/manager and used as a load management resource to limit peak electrical demand, resulting in lower electrical demand charges. An automated system that tracks electrical demand and initiates load shedding is envisioned.
- **When:** As needed up to a maximum of 100 hours per year of lamp operating time.
- **Where:** The technology is applicable to all commercial and industrial applications except where light-dependent critical tasks or processes are conducted (e.g., hospital operating rooms).

This definition formed the basis for developing a performance specification for the load-shedding ballast.

4.2. Draft Specification

A draft performance specification was developed early in the project to guide development of the load-shedding ballast technology. A specification is especially important for this development process for a number of reasons. First, the concept for load-responsive lighting involves the fusion of ideas from many diverse sources, such as the electricity market, human factors and lighting design, lamp/ballast technology, and electronic signaling. A detailed specification helps ensure that all aspects are addressed in the resulting product. Through the process of writing the specification, the essential attributes of the product are defined and the non-essential technological relics are identified and left out.

Second, a performance specification establishes a criterion, or benchmark, against which to judge the success of what is ultimately developed, and where along the development path improvements need to be made.

Third, a performance specification provides a concise and clear means of communicating the product idea to potential manufacturers. It helps ensure that the ideas are communicated correctly and that important aspects are not overlooked. Once a specification is in place, manufacturers can concentrate on the details of how their product will meet or exceed the specification, rather than face uncertainties about what to produce.

Much effort went into making the specification as technologically neutral as possible. Objective performance metrics were used that concentrate on the result and not on the

means for achieving that result. This was considered important for allowing the technology to be easily adopted by different ballast and controls manufacturers who would each have their own preferred and/or proprietary means of actually building the ballast. Established performance metrics were used if applicable, such as for specifying the energy efficiency with ballast efficiency factor (BEF).

An exception to a solely performance-based specification is the signaling section. Here it is important to have a level of standardization across products so that they will all respond to the same standardized signal. Therefore, the method of signal modulation and choice of frequency(s) had to be defined. Even so, within the confines of a particular modulation method, manufacturers are free to choose their own methods of demodulation and reception.

4.2.1. Performance specification

4.2.1.1. Physical

- Same size and form factor of standard ballast
- Wiring connections and number of wires identical to standard instant-start ballast

4.2.1.2. Energy and electrical

- Ballast efficiency factor (equal to current instant-start products)
- Ballast factor: 0.77 to 0.9 (157–188 milliamps [mA] full output, 105–125 mA dimmed)
- Power quality; total harmonic distortion (THD) < 20%, power factor (PF) > 0.9 for normal and dimmed operation

4.2.1.3. Dimming

- Dimming rate: -10% per second < Rate < -0.3% per second measured with a 50 Hertz (Hz) upper frequency response (basically a ramp function dimming over a period of 3–120 seconds with no abrupt changes visible to the human eye.
- Always start lamps at full nominal power level (100%) and maintain that level for at least 20 seconds
- Default mode (in case of signaling error) is full nominal power level

4.2.1.4. Signaling

Power line carrier signal

- Amplitude shift keying (ASK) modulation with 100% modulation depth (carrier present/absent)
- Modulation frequency: 7.5 Hz (1/8 of alternating current [AC] line frequency)
- Modulation phase: Synchronized to 60 Hz AC line frequency with phase shifting by one 60 Hz cycle (16.67 millisecond [ms]) every 4 seconds. (In three-phase systems two of the phases will be a constant 120 degrees out of phase with the modulation frequency and this is acceptable.)
- Carrier frequency: 145 kilohertz (kHz) ±5 kHz

Load shed operation

- Presence of signal triggers and sustains load shed, absence of signal triggers and sustains nominal light output (The default condition with no signal present is, therefore, full light output.)

Receiver characteristics

- Sensitivity: Operates for signals in the range from 5 millivolt (mV) root mean squared (rms) to 5 volt (V) rms (60 decibel [dB] range)
- Response time: 180 seconds
- Noise/interference rejection
- Guard against false triggering
- Detection in the presence of noise (white, impulse, and harmonic)

4.3. Justification and Discussion of the Specification

4.3.1. Physical size

To fully capitalize on load shedding opportunities for fluorescent lighting, it is important that a load-shedding ballast can be substituted for a standard ballast and fit within the confines of different luminaire styles. In the United States, most ballasts for T-8 fluorescent lamps conform to two basic shapes:

- The standard "brick" measuring 9.50 x 2.38 x 1.50 inches (in)
- The smaller profile measuring 9.50 x 1.70 x 1.18 in

Both sizes have the same size mounting brackets, but many luminaries require the smaller, lower profile ballast size so that the luminaire can have a smaller profile as well. The industry trend is towards making things smaller and luminaire manufacturers are quick to capitalize on this when designing new luminaries. Any increase in the size requirements for load-shedding ballasts would limit their appeal and applicability for certain luminaire types.

The additional circuit components needed for load-shedding ballasts are small and would require less than 0.5 W of additional heat management. Because instant-start ballasts have fewer components than other ballast types, if it is possible to make a four-lamp dimming ballast fit within the confines of a standard "brick" ballast case, it seems very probable that a four-lamp load-shedding ballast should fit comfortably into that same space.

Related to ballast size is the number of wiring connections that need to be made when ballasts are installed. Not only do extra wiring connections require extra labor and increase the probability of incorrect hookup, the wires and their points of attachment require space within both the luminaire case and the ballast case. Instant-start ballasts require the minimum number of wire connections between the lamp and the ballast, and a PLC signaling method eliminates the need for any other wiring connections. Therefore, a load-shedding ballast can be identical in shape to standard ballasts and have identical installation requirements.

4.3.2. Energy and electrical

The efficiency of full-dimming ballasts is lower than that of comparable non-dimming ballasts for two reasons. First, the design of lamps and ballasts can be optimized more easily for one specific power level than for a range of power levels. For example, lamp electrodes are designed to operate at a specific temperature. Consequently, they are sized so that self-heating from the discharge current provides sufficient heating. Adjusting the discharge current changes the amount of self heating and the operation of the lamp.

Second, the electronics necessary for control and communication require power to operate. For large loads, the power required to operate the controls can be made a small percentage of the power required by the device under control, but as the load size decreases, the power requirements of controls do not scale proportionally with the total system power requirements and consume a larger percentage of the total power. Small, widely distributed loads, such as fluorescent lamp ballasts, require proportionally more power to control than large, centralized loads.

Although the primary purpose of the load-shedding ballast is to reduce power demand at certain times, minimizing energy use is still an important aspect of a commercially successful ballast. Given that controls require power to function, the design goal is to minimize that extra power requirement so that the net energy use of the system, considering the proportion of time operated at dimmed levels, is equal to or less than systems without the control. Minimizing energy use is accomplished in three ways:

- Using an efficient ballast design
- Ensuring the control has minimal impact on efficacy under normal, full power operation
- Minimizing the power requirements of the control gear

Regarding ballast design, Table 5 shows the relative efficacies of the commercially available ballast types. Except where indicated, the data in Table 4 are the average values from a sampling of energy efficient products from many different manufacturers as taken from National Lighting Product Information Program (NLPIP) Specifier Reports on electronic ballasts and dimming ballasts (NLPIP 2000; NLPIP 1999).

Table 5. Relative efficacy of commercially available ballast types

Ballast type	BEF (2-lamp)	BEF standard deviation	Relative efficacy	Input power for equal light output
Instant-start	1.52	0.031	1.00	60.0
Rapid-start	1.45	0.048	0.95	63.2
Programmed-start	1.50*	NA*	0.99*	60.6*
Conventional dimming ballast	1.38	0.049	0.91	65.9

* Based on one manufacturer's data

Instant-start ballasts have the highest efficacy. The slightly lower efficacy of programmed-start ballasts is most likely due to the power required for the extra circuitry involved with programmed starting and residual cathode heating during operation. As with instant-start, most programmed-start ballasts do not provide supplemental electrode heating, except during starting. However, measurements performed at LRC show some residual electrode heating voltage remains after the lamps have started, which probably accounts for the slight decrease in efficiency compared to instant-start systems. Building a load-shedding ballast on an instant- or programmed-start platform permits high efficacy to be maintained. Rapid-start and traditional dimming ballast platforms that continuously provide supplemental electrode heating are not as attractive for load-shedding applications because of the substantial increase in energy use for full light output operation. Since the ballast is operated at full output for the vast majority of the time, high efficiency under this condition is essential.

Adding the ability to dim potentially decreases the efficacy of ballasts, even when the ballast is operated at full power. This impact must be limited as much as possible since a load-shedding ballast operates at full power for the vast majority of the time.

Minimizing the power requirements of the control gear greatly affects overall system efficacy. The control gear consists of the PLC receiver in the ballast, circuitry in the ballast that engages dimming, and the central transmitter of the PLC signal. The power consumption of the transmitter is the least critical factor because one transmitter serves potentially hundreds of ballasts or more and the transmitter doesn't need to transmit any signal except during load-shedding events. In contrast, the PLC receiver and other control circuitry inside each ballast are critical since any power consumption and associated energy use directly subtracts from the efficacy of every ballast.

4.3.3. Ballast efficiency factor

Considering the above, the specification for a load-shedding ballast should ensure that adding load-shedding capability does not compromise overall energy savings. A load-shedding ballast must therefore have a BEF that nearly matches the widely used instant-start products on the market with a small allowance, or decrease, in efficacy for the control aspect. The resulting increase in energy use for this allowance should be no larger than the energy savings expected from dimming the ballast during the brief load-shedding periods. In other words, the net energy use of a load-shedding ballast should not exceed that of the commonly used instant-start system. For example, dimming a three-lamp instant-start system (90 W) that is operated 2600 hours per year (10 hours per day, 5 days per week) for a 33% power reduction, for 100 hours per year, saves three kilowatt-hours (kWh) per year. This energy savings is equivalent to an efficacy reduction of 1.3%, or, an allowance of 1.15 W per ballast for the ability to control and dim the lighting.

4.3.4. Ballast factor

The choice of ballast factor provides lighting designers and specifiers the ability to fine-tune their lighting designs so that lighting objectives are met with the least amount of connected load. Choosing a load-shedding ballast should not take away this design flexibility. However, low ballast factor ballasts already operate lamps at current levels well below the nominal operating currents. For such ballasts, further reducing the

current to obtain the required power reduction might have a greater impact on lamp life than would such a change for higher ballast factor ballasts. Present life test data indicate that dimming up to 50% for short periods has minimal impact on lamp life, so it appears safe to include low ballast factor ballasts. As more data on the impact on lamp life when operating lamps at reduced currents without supplemental cathode heating are gathered, the decision to include low ballast factor ballasts should be revisited.

4.3.5. Power quality

Similar to the argument for BEF, the power quality of a load-shedding ballast should be equal to or better than accepted industry norms to ensure widespread use of the technology.

4.3.6. Dimming range and transition

The amount of dimming is determined by three factors:

- The desire to reduce the power consumption of ballasts as much as possible so that lighting load shedding can have the greatest impact
- The need to provide and maintain adequate illumination for the building
- The technology limitation involved with cost-effective dimming with instant-start systems

Fortunately, the relationship between system power reduction and light output is nearly linear over most of the dimming range considered and nearly proportional near full light output. Because a portion of the power losses in lamps and ballasts is nearly constant regardless of dim level, the relationship between system power consumption and light output has a positive offset that makes the relationship not strictly proportional. The offset, on the order of a few W per lamp, becomes more significant at low power levels. However, power reductions of up to approximately 30% correspond to roughly equivalent percentage reductions in light output.

Previous work at LRC on the detection and acceptability of temporarily reduced light levels (i.e., dimming for load shedding) showed that a reduction of 15% in illuminance levels is approximately the threshold for noticing changes under typical office lighting conditions (LRC 2003b). However, light level reductions that are deemed acceptable in an office environment range from approximately 25 to 50% depending on the office task (for example, lower acceptable levels are acceptable for computer tasks than for paper work) and on whether the occupants were informed of the purpose of dimming. When informed about the benefits of load shedding, which include cost savings and the local and global environmental benefits from avoiding power plant and transmission line construction, an additional 20–30% illuminance reduction was acceptable to test subjects.

It is recognized that dimming all the lamps in a luminaire with a special load-shedding ballast is not the only way to participate in lighting load shedding. A dimming effect can also be achieved by switching techniques. These techniques include using tandem-wired ballasts, which allows for separate switching of a fraction of the lamps in multi-lamp luminaries, or employing a multi-lamp ballast that can separately switch-off a fraction of the lamps it operates. With different techniques available to implement lighting load shed with varying amounts of demand reductions, it was recognized that the

marketplace would likely be plagued by confusing claims about load-shedding products if any amount of dimming were to be called load-shedding.

Therefore, after discussions with lamp and ballast manufacturers, load-shed dimming was tentatively defined, taking into account what was thought technically possible and worthwhile (as previously discussed in the section 4.1 Industry Input). Since it was deemed important to include both switching and dimming as means of achieving power reductions, the levels 33% and 50% were chosen. The 33% level is achieved through either dimming or switching off one lamp in three-lamp ballasts, while the 50% level is attained by switching-off lamps in two- and four-lamp ballasts. When these strategies were decided, dimming instant-start lamps to 50% was considered too detrimental to lamp life to be an option. However, recent life test data indicate that acceptable lamp life might be obtained for short dimming periods of up to 50%, at least for some high ballast factor ballasts (see "Lamp life when dimming instant-start operated lamps" in Testing section).

4.3.7. Dimming transition

The transition from normal, full light output to a dimmed, load-shedding condition can be made less noticeable to occupants by a dimming gradually over several seconds thereby avoiding sudden fluctuations in light level. Previous work at the LRC investigated the effect of different dimming rates and transition profiles on occupants' acceptability of dimming (LRC 2003b). From these studies, and the existing literature on this topic, it was concluded that the transition profile and the time over which dimming occurs has little or no effect on occupants' detection of illuminance changes. The dimming periods tested ranged from 3 to 120 seconds. The research pointed to memory of the initial brightness as being the primary factor in determining when a change in illuminance is detected.

4.3.8. Signaling

Cost-effective, reliable, and compatible with existing control systems are the main requirements of a lighting load-shedding system. Keeping the costs low for the receiver technology is perhaps the most challenging requirement due to the narrow price margins on fluorescent lamp ballasts. To make use of existing communication systems, and to build on existing infrastructure, the signaling path for load shedding is divided into 3 domains:

- Utility/ISO to building or facility
- Communication within the facility or building to major electrical distribution centers
- From the electrical distribution centers to the individual ballasts.

Each of these communication domains has a different optimal solution based on the distances that are covered and available communication infrastructure and services. It is proposed that Internet website posting and existing building automation/communication systems provide solutions for the first two domains. However, no cost-effective communication system exists for the last domain that distributes the signal to the individual lighting loads, i.e., the ballasts.

Any signaling method that requires new wiring or physical linking of individual ballasts is considered too costly for a load-shedding lighting system. Of the available wireless techniques, optical signaling has too limited a range within buildings and, as with radio, would require a wave-guide or antenna to enable a metal-enclosed ballast to receive a signal. Wireless radio signaling has future potential, but presently the technology is too expensive as a system due to government regulation requirements needed for sharing the communication channel with other equipment.

While not exactly wireless, power line carrier (PLC) signaling techniques do not require any additional physical infrastructure. While a cost-effective off-the-shelf solution using PLC technology could not be found, all the elements of a solution are present with existing PLC technology. Obtaining a solution for load-shedding involves trading-off the high data rates of current systems for lower-cost systems that operate over relatively short intra-building distances. The challenge with using the power lines for signaling is coping with its variable and noisy characteristics. Signaling techniques that work well for radio and dedicated wire networks often have reliability problems when used in the power line environment (Dostert 2001). However, a load-shedding signaling system that takes advantage of the unique requirements of load management by incorporating specialized modulation techniques can dramatically improve the reliability and cost-effectiveness of a PLC system (LRC 2003c).

4.3.9. Noise and reliability problems with power line carrier signaling

Perhaps the most difficult challenge with using the power lines as a communication medium is dealing with power line noise. Noise arises from both natural causes, such as corona discharges and lightning strikes, and man-made sources such as radio and television stations, as well as from appliances and other devices that are connected to the power lines. Because of the diversity of appliances connected to the power lines and the relatively high power levels at which they operate, noise problems when using the power lines are potentially much worse than for other communication media.

Power line noise is classified into at least three types: background noise, narrow-band noise, and impulsive noise. Figure 1 shows a spectral plot of typical background noise levels found on power lines. Background noise has a continuous spectral power density and decreases with frequency. At 150 kHz, background noise is often 0.1% of levels found at 20 kHz (Dostert 2001). Background noise, being similar in characteristics to noise in other communication media, presents no additional challenges for power line communication. Certain devices, however, produce large amounts of full-spectrum, background-like noise that can affect nearby communication. Universal motors, typically found in such household appliances as kitchen appliances, vacuum cleaners, and power tools, emit large amounts of background noise that can jam nearby receivers.

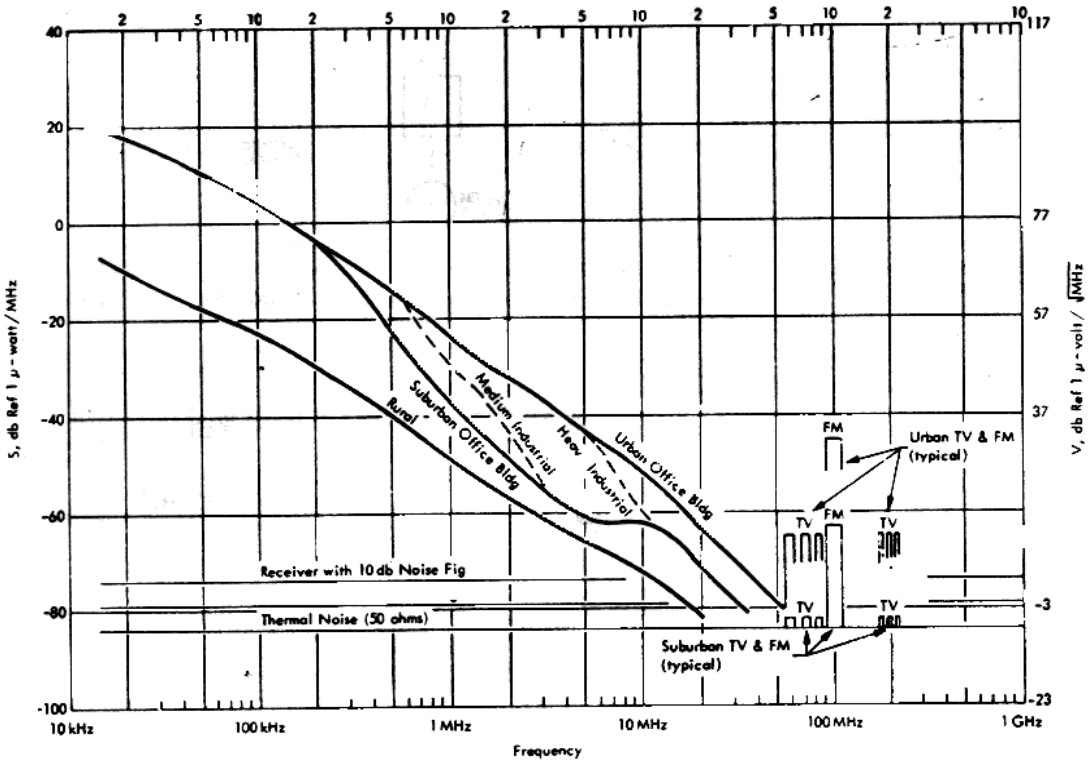

Figure 1. Typical background noise levels for power lines (Van der Gracht 1985)

Figure 1 also shows examples of narrow-band noise, in this case arising from TV and radio broadcasts. The power lines act as an antenna, picking up and emitting radio frequency signals. Generally, narrow-band noise from intentional emitters, such as broadcasting stations, can easily be avoided by selection of appropriate carrier frequencies. More problematic are narrow-band emissions from unintentional emitters such as televisions and CRT monitors. Figure 2 shows the noise spectrum from a television set, which clearly shows narrow band emissions at the harmonics of the 15.734 kHz line raster frequency. If all CRT devices operated at the same resolution and refresh rates, then interference from these devices would be easy to avoid, but CRTs, especially computer monitors, have many different resolutions and refresh rates making it hard to predict the frequencies of narrow band emissions. Switching power supplies (including electronic fluorescent lamp ballasts) are another source of narrow band emissions for which the frequency of their operation ranges from a few kHz up to hundreds of kHz.

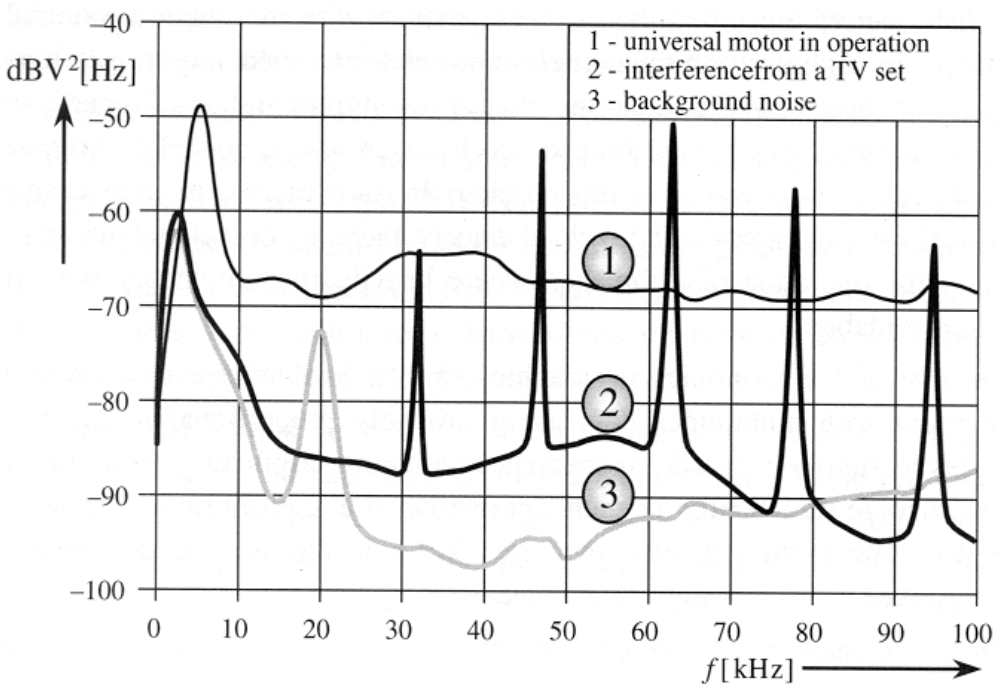

Figure 2. Power line noise spectrum from common appliances (Dostert 2001)

Impulsive noise is described as sporadic pulses, or disturbances, on the power lines. They usually arise from the switching of large loads. The noise from a switching transient is a brief, continuous spectrum that decreases with frequency. Impulsive noise can be caused by randomly occurring events, or from periodic switching events. The common triac-based incandescent lamp dimmer that uses phase-controlled switching to control its load is an example of a device that produces periodic impulsive noise on the power lines. A switching transient occurs each half-cycle of the AC waveform with little or no noise generated between events. Switching transients are small, near the zero-crossing of the AC waveform, which is the basis for the popular X-10 PLC protocol that claims increased signal reliability by timing short data transmissions to occur near the zero-crossings of the AC power waveform. Impulsive noise is difficult to measure because its average power is low, but its peak power can be very large. Its effect on high speed digital communication is typically the introduction of bit-errors, making the received data unreliable.

For low information-rate signaling, as needed for a lighting load-shedding system, randomly occurring impulsive noise can easily be overcome with receivers that have long signal integration times. Similarly, background noise can also be overcome to a large extent by long integration times, provided that the noise level is not so large that it exceeds the dynamic range of the receiver, effectively jamming it. With long integration times, periodic impulsive noise can be expected to have a similar effect on reception as background noise, provided that the integration time is much longer than the period of the impulses. However, the magnitude of impulsive noise is typically much greater than background noise. Narrow-band noise is perhaps the trickiest to handle because of its potentially high power levels at a particular frequency. If the frequency of a narrowband emitter happens to coincide with the PLC carrier frequency, the signal can easily be

jammed. While narrowing the bandwidth of the receiver decreases the chances of a coincidence of frequencies, it increases the cost of the system and does not guarantee freedom from interference. Spread-spectrum modulation techniques offer the best solution to narrowband interference originating from unpredictable, unknown sources, however, such techniques require sophisticated receivers, which add considerably to the cost.

4.3.10. Proposed PLC signaling method

A simple form of synchronous detection is proposed in the load-shedding specification to overcome the noise problems and to have a cost-effective solution. Synchronous detection is a well established technique for recovering signals in the presence of noise and other interfering signals. The basic technique is also called lock-in detection, or phase detection.

With synchronous detection, the transmitted signal is made periodic, such as by turning it on and off in a square-wave pattern. The receiver is synchronized to the transmitted signal so that it positively integrates, or sums, the reception of the signal along with whatever noise is present when the signal is being transmitted, and negatively integrates (i.e., subtracts) the reception of the noise during periods when the signal is not being transmitted. Over the course of many cycles, the received noise nulls to zero because it is positively integrated for exactly half the time and negatively integrated for half the time. The signal, on the other hand, is not present when the negative integration occurs, so its value builds over time. As more cycles of the periodic signal are integrated, noise cancellation becomes more complete, and the signal strength grows. Therefore, receiver sensitivity and noise rejection is improved with longer integration times (i.e., slower data rates).

Applying synchronous detection to a widely distributed signaling system is complicated by the need for the transmitter and receiver to be precisely synchronized. After all, if a synchronizing clock signal could easily be sent between transmitter and receiver, what would be the point of using synchronous detection in the first place? Fortunately, the electrical distribution system has a "built-in" clock: the 60-Hz AC line frequency. However, using 60 Hz, or a multiple of it, for the modulating frequency does not isolate the transmitted signal because most noise on the power lines, especially impulsive noise, is also periodic with the 60-Hz fundamental frequency of the line or a multiple of it.

Using a modulating frequency lower than 60 Hz is effective for reducing power line noise, and if the modulation frequency is a subharmonic of 60 Hz, the 60 Hz associated noise is completely canceled over one integration period. A subharmonic is a frequency that can be divided into another an exact number of times; thus, 7.5 Hz is a subharmonic of 60 Hz, being exactly 1/8 the frequency. The relatively slow modulation rates associated with 60 Hz subharmonics limits the rate at which information, or data, can be transmitted to what is considered extremely slow by today's standards (on the order of 1 bit per second), but the slow information rate is perfectly acceptable for a load-shedding system with a required response time of up to several minutes.

Further details on the implementation of a synchronous detection scheme are given in the following section on technology development. The main point to be made here in the specification section is that in order to deal with power line noise and signal attenuation

between the neutral and line conductors, special signaling methods are needed, and the method of synchronous detection appears to fulfill this requirement and remain cost effective. Other modulation and signaling techniques might become apparent as more development work on load-shedding ballasts ensues, and if shown to meet the requirements better than synchronous detection, then this part of the specification should change to make use of a better solution. So, while it is necessary at this time to have a signaling method precisely defined, thereby demonstrating that it is indeed feasible, the exact specification of it should be viewed as a placeholder until the industry agrees or settles on a method of its own choice.

4.3.11. Triggering load shed and the default condition

It is highly important to avoid false triggering in and out of the load-shedding condition. Such false triggering is detrimental to the life of the lamps and could unnecessarily annoy occupants. The default condition of the ballasts shall be full light output. Full light output is necessary during the starting of the lamps and for normal operation of ballasts in the presence of no PLC signal. Therefore, if a customer decides not to participate in load-shedding practices, the ballasts will provide full light output by simply disabling the signaling system.

Triggering of load shedding must be refreshed approximately every ten minutes so that lighting loads switched on after the initial load-shed signal is broadcasted will be able to go into the load-shedding condition. Periodically refreshing the signal also prevents people from manually exiting the load-shedding condition by cycling the lights off and on.

To address the above issues, the triggering of load shedding shall be based on the presence or absence of the PLC signal; the presence of the signal triggers and maintains load shedding, while the absence of a signal triggers and maintains normal, full light output operation. Signal conditioning shall be provided so that the ballast is not sensitive to momentary interruptions of signal. For example, triggering that requires a sustained signal, or lack of one, for several minutes would limit the possibility of false triggering.

4.3.12. Receiver characteristics (sensitivity, noise rejection, false triggering, etc.)

To avoid false triggering of a load-shedding operation, and to ensure reliable power reductions when load shedding is initiated, the receiver must operate in the presence of power line noise and other environmental conditions to which electronic ballasts are subject. Metrics for these conditions and performance levels are yet to be determined.

5.0 Technology Development

The technology development for the load-shedding ballast focused on two distinct areas of research:

- A method of dimming that could be applied to instant-start operated lamps
- The PLC signal receiver

These are discussed separately and have little interaction with one another.

5.1. Dimming Instant Start–Operated Lamps

Dimming a fluorescent lamp amounts to reducing the electrical current supplied across the length of the lamp. There are many ways to accomplish a reduction in lamp current, some of which are used in existing dimming ballast designs. Working solely with electronic instant-start ballasts simplifies the problem considerably. It avoids the whole issue of maintaining an appropriate amount of supplemental electrode heating during dimming, which is a problem that lacks adequate scientific understanding, and displays little consensus among manufacturers as to what the optimal supplemental electrode heating should be when dimming lamps. A survey conducted by the LRC of dimming ballast electrode heating characteristics shows different amounts of supplemental electrode heating among major ballast brands and different strategies for changing the heating as lamps are dimmed, i.e., some ballasts increase electrode heating as the lamps are dimmed, while others keep it relatively constant. Research is now underway at the LRC to help better understand the relationship between dimming and lamp life with different amounts of supplemental electrode heating. This research is aimed at developing specifications for supplemental electrode heating when dimming T8 lamps and is funded by the DOE and with support from the National Electrical Manufacturers Association (NEMA), through which lamp and ballast manufacturers are taking an active role.

Dimming is also greatly simplified by the limited range of dimming required for load shedding. Some methods for dimming do not work below certain limits. For example, a simple reduction in supply voltage, a commonly practiced method of dimming done at the electrical panel, only works up to a point before the lamp arc extinguishes, or ballast components fail to work properly due to the low input voltage (NLPIP 1992). Keeping the lamp arc stable at extremely low current levels, corresponding to dim levels less than approximately 15% of nominal full light output, is troublesome as well. Part of the cause of this trouble at very low lamp current is the changing plasma dynamics within the lamp and a lack of understanding of the basic plasma physics describing these changes (LRC 2002). Because dimming for load shedding doesn't enter into this realm of deep dimming, the project team anticipated that dimming for the load-shedding ballast would be much simpler than that of traditional full-range dimming ballasts, and could meet the low-cost requirements set fourth in this project.

Some of the methods available for dimming lamps operated on electronic instant-start ballasts, with a dimming range of less than 50%, are as follows:

- Reduce the internal buss voltage that provides power to the high-frequency resonate output circuit. This is similar to what happens to unregulated electronic ballasts when the input voltage (i.e., power line voltage) is reduced.
- Vary the drive on the inverter transistors that feed power to the output circuit. For example, a pulse-width-modulation (PWM) scheme can be used to vary the amount of power delivered to the output circuit that powers the lamps.
- Vary the frequency of the output circuit. This technique is widely used in traditional dimming ballast design. As the drive frequency of the lamp circuit is increased, the impedance of the circuit changes, thereby changing the amount of power delivered to the lamp. Sometimes this is described as moving the frequency away from resonance. In traditional dimming ballasts, it is common to measure a frequency change from 40 kHz to 70 kHz as the lamp is dimmed.
- Add reactive impedance to the output circuit that powers the lamp. The effect of adding additional reactive impedance to the circuit is essentially the same as varying the frequency. Less current flows though the circuit when the impedance, which is frequency dependent, is increased. Adding reactive impedance amounts to adding a capacitor in series with the lamp. Because the frequency is relatively high (circa 40 kHz), the value of added capacitance is on the order of one nanofarad (10^{-9} farads) – a practical, inexpensive value to obtain. The method is called "switched capacitor dimming."

When designing a new ballast or modifying an existing ballast design, all these dimming options are available since the circuitry can be altered anywhere. For making an add-on device to be applied to existing ballasts, however, the options are limited to numbers 1 and 4 above. Option 1 has limited applicability to existing ballasts, though, because certain ballast designs, such as those described as "active front-end" or "active power factor correction," have power regulation making them insensitive to input supply voltage variations. Changing the input voltage can also have detrimental effects to the operation of the ballast since the operating characteristics of many electronic components are voltage dependent. Therefore, Option 4 was chosen for further development because it could be used for both an add-on device and incorporated into the ballast case of an existing ballast design.

It is worth mentioning that a solution that preserves the design of existing commercial ballasts is worth a lot to manufacturers. Embarking on a new ballast design involves risk and much cost is involved with testing and verifying the new design, not to mention the fact that existing ballast designs have likely gone through many price optimization redesigns. A tested technology that can be applied to any existing electronic instant-start ballast type has a better chance of attracting manufacturers' attention than one requiring substantial design changes.

Figure 3 schematically shows the method of dimming where a capacitor is added in series with the lamp. The ballast in Figure 3 is modeled as a 600-V AC voltage source in series with a 2.2 nF capacitor. This is a simplification of an actual electronic ballast output circuit, but it is suitable for first-order predictions of lamp current and output voltages. The output circuit of an instant-start ballast is designed to operate safely over a wide range of lamp impedances. It must work safely under the open-circuit condition when no lamp is present, when a lamp fails, or at the instant of starting the lamp. Once

the lamp is operating the voltage across, it is about 130 V, corresponding to impedance in the range from 500 to 1000 ohms. As the current to the lamp is decreased, i.e., the lamp is dimmed, the voltage across the lamp rises slightly, and the impedance rises sharply to values in the thousands of ohms.

To instantly start a four-foot lamp, the minimum open circuit voltage produced by the ballast is several hundred V, and a survey of manufacturer provided data on instant-start ballasts show that most report open circuit voltages of 600 VAC rms or more (NLPIP 2000). The wave shape is typically sinusoidal so that the peak voltages developed by the ballast are in excess of 850 V. Measurements of actual ballasts show peak open circuit voltages typically exceeding 1000 V peak, with some as high as 1400 V peak. These open circuit voltages are used to determine the voltages that the series connected capacitor and switch must withstand.

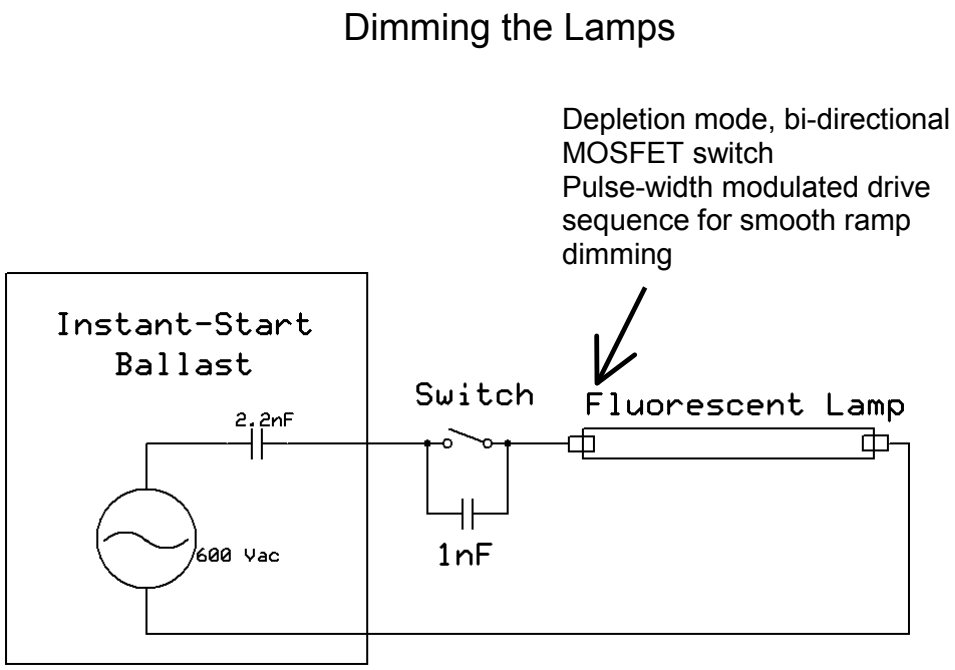

Figure 3. Switched capacitor dimming of instant start–operated lamp

5.1.1. Implementing Switched Capacitor Dimming

Though simple in concept, the switched capacitor dimming method has some challenging implementation issues for use in a low-cost load-shedding ballast. The major design issues are listed below.

- The high voltages present in the lamp circuit
- AC operation, i.e., bi-directional voltages and current flow
- Sizeable lamp currents (circa 200 mA per lamp)
- Relatively high frequency (40 kHz to 100 kHz)
- The desire to smoothly ramp-down lamp current over a few seconds (i.e., avoid a sudden transition in light level)

Calculation of the voltage that the capacitor and switch must withstand was approximated by treating the lamp as a constant voltage drop of about 100 V. In other words, the voltage across the lamp remains constant, to a first approximation, as the lamp is dimmed. With the lamp modeled this way, the circuit becomes a capacitive voltage divider with a source voltage of the ballast open circuit voltage minus the lamp voltage. The voltage across the added capacitor is calculated as

$$V_{C2} = V \frac{C_1}{(C_1 + C_2)}$$

Where C_2 is the added capacitor, C_1 is the capacitor internal to the ballast, V is the source voltage and V_{C2} is the voltage across the added capacitor.

For 33% dimming the capacitor is about 1 nF and the voltage that the capacitor and switch must withstand is about two-thirds of the open circuit voltage of the ballast, or 400 V rms. Since it is the peak voltage that determines breakdown and safety limits for components, and assuming sinusoidal waveforms, the peak voltage is 565 V peak. Adding a safety margin to account for high crest factor waveforms and ballasts that exceed 600 V open circuit voltage easily puts the minimum component ratings at 600 V peak.

For the capacitor, 600 V ratings are not problematic since ceramic capacitors with 1000 to 3000 V ratings and good high frequency performance are readily available, although they are somewhat more expensive than lower voltage capacitors, and slightly larger in size. Given the modest value of the required capacitance (1 nF) the volume of the capacitor is less than 0.5 cm^3.

Designing a switching method that allows the capacitor to be automatically taken in and out of the circuit, and one that enables a smoothly ramping dimming transition was difficult. Two avenues were explored. One avenue was using an electromechanical relay and another was using a solid-state electronic switch.

5.1.2. Electromechanical relay

Three main problems with electromechanical relays are 1) they are relatively slow to respond with response times in the 1 to 20 ms range, 2) for switching high voltages with relatively high currents their size becomes an issue, and 3) the power required to activate them is significant, especially for larger sized ones with high voltage and current capability.

Because they are slow to respond, and since they have only two discrete states, open and closed, the capability to smoothly ramp dimming is not immediately obvious. To achieve ramp dimming a gradual change in resistance of the switch from infinite (open) to zero (closed) is needed. When the switch is fully open or closed no power is dissipated in the switch, but at an intermediate value of resistance the switch dissipates heat corresponding to relation $P=I^2R$, where P is power (W), I is lamp current (amperes) and R is the resistance of the switch (ohms). The idea of using resistors that change their resistance by orders of magnitude upon heating in combination with a relay switch was explored. These resistors are called either positive temperature coefficient (PTC), or negative temperature coefficient (NTC) thermistors. PTC thermistors are commonly

used in power electronic gear as in-rush current limiters and are readily available in sizes and voltage ratings that are suitable for the lamp circuit. Though the project team was able to achieve smooth dimming transitions from one state to another by using PTC thermistors, the residual resistance of the devices reduced the efficiency of operation, generated a lot of heat to deal with, and the variable capacitance of the devices made the actual amount of dimming unpredictable. In addition, smoothly ramping transitions for both dimming and restoring full light output would likely required many components and likely exceed the cost imitations. The use of thermistors was not developed further than some preliminary laboratory tests. Perhaps with some specially designed thermistors this technique could be perfected into a viable method of making a smoothly ramping dimming transition.

Not having a means to smoothly ramp the dimming when using electromechanical relays limited their appeal for use in the load-shedding ballast. Nevertheless, an understanding of the other limitation of using electromechanical relays is important to pursue because the smooth ramp specification for load-shedding is not a necessity and so could be dropped from the specification if it proved too difficult to obtain.

Electromechanical relays in packages for printed circuit board applications (relatively small size) with switching voltage rating above 600 V are apparently not commonly used devices and only a few specialty vendors supply them. Consequently, the cost tends to be quite high. Relays meeting the voltage and current specifications that the LRC purchased to run the fluorescent lamp life test cost more than $20 each, and their large size makes them unsuitable for incorporating them into a ballast case (20 cm^3 per relay). While many relays are available with high stand-off voltage ratings, they are not suitable for switching active loads, that is, they are not suitable for interrupting current flow when high drive voltages are present. A few relays that the team tried that had the required stand-off voltage rating, but not the active switching current rating, lasted only one or two cycles before failing with their contacts welded shut, presumably from the excessive electrical arcing as the contacts opened or shut. From the project team's practical, although admittedly non-analytical approach to selecting a suitable relay, the project team concluded that a relay, by itself, was not a practical switching component to use in the load-shedding ballast design. To produce the ballast at low-cost would require a solid-state type of switch.

5.1.3. Solid-state switch options: SCR, MOSFET

Two categories of solid-state relays are available for switching AC loads. The lowest cost and most commonly used devices are based on a device called a silicon controlled rectifier (SCR). An SCR is a unidirectional switch, meaning that it can only handle dc current, but two devices can be arranged with reversed polarity to control AC currents. A variant of the SCR that handles AC current flow is known as a triac, or thyristor. These devices are commonly used in power control devices such as incandescent lamp dimmers, heaters, and motor controls. SCRs are available with voltage ratings up to 800 V or more, and with current carrying capacity of 10 amps or more with a package size less than 0.5 cm^3. In high voltage applications they have very efficient operation due to very fast turn-on times and a low impedance on-state with about a 1 V drop across the device. Their shortcoming is their inability to control high frequency signals.

SCRs have a maximum dv/dt rating that specifies the maximum rate of the change in voltage applied across the switch terminals for the device to remain in the off-state (non-conducting). If the rate of change in voltage exceeds the dv/dt limit, the device self-triggers and conducts current as though it were signaled to go into the on-state. The project team could not find dv/dt ratings that were higher than about 20 V/μs. For a lamp circuit operated by an instant-start ballast at 40 kHz, and with a voltage across the capacitor of 400 Vrms the maximum dv/dt of the voltage is:

$$\max\frac{dV}{dt} = \max\frac{d}{dt}(345\sqrt{2}\sin(2\pi ft) = \left[345\sqrt{2}\cdot 2\pi f\cos(2\pi ft)\right]_{t=0} = 1.42\cdot 10^{8}\ \text{v/s}$$

Unfortunately, the highest dv/dt ratings for SCR devices are nearly an order of magnitude below the above number. Common triacs are rated from 1 to 10 v/μs. From the above calculation a value significantly greater than 142 V/μs is needed. Being experimentalists, the team tried using triacs with the 10 V/μs rating and found that when in the lamp circuit they would continuously conduct regardless of the signaled state.

Metal-oxide-semiconductor field-effect transistor (MOSFETs) are a type of transistor consisting of a conduction channel that can be switched between states of extremely high resistance (10^{14} ohms) and low resistance (a few ohms or less) by a low voltage gate signal. The gate is separated from the channel by a thin insulating dielectric layer. MOSFET is an acronym for *metal oxide semiconductor field-effect transistor*. The metal oxide is the insulating layer between the gate and the conduction channel, and the term field-effect describes the action of the device whereby the conductance of the channel is regulated by the electric field produced by the voltage between the gate terminal and one of the conduction channel terminals named the source. MOSFETs are used extensively in power electronic devices. They have voltage ratings up to several hundred V and can be operated in series for higher voltages than a single device can handle. As with SCR devices, they are very efficient devices with fast switching times and large current capacities for certain package styles. Unlike SRC devices, there is no dv/dt limitation making them suitable for high frequency applications. Also, multiple devices can be operated in parallel to increase the current carrying capacity beyond that of a single device without special precautions and circuitry to evenly spread the current between devices as needed with SCRs.

Unlike SCRs, MOSFETs do not come in a bi-directional AC version analogous to a triac, so for AC circuits pairs of MOSFETs are needed to conduct current in both directions. This pairing involves other components to block and/or shunt current around the reversed biased MOSFET during alternating half cycles of the AC waveform and electrically isolated drive circuitry to keep the proper polarity on the gate voltages. A particularly useful circuit for using MOSFETs in AC circuits is to use optically isolated gate drives. In this type of circuit the gate voltage is produced by a photocell that receives the optical signal from an electrically isolated light emitting diode (LED). In addition to enabling proper biasing of the MOSFETs to conduct AC currents, the optical isolation makes interfacing the lamp circuitry with the signal receiver circuitry easy.

Integrated MOSFET switches, with optically isolated gate photocells and drive LEDs, are made as complete electronic packages and constitute one type of solid-state relay (SSR).

The limitation with the integrated solid-state relays of this type is that the packaging style is limited to about 500 mW of heat dissipation that affects the current carrying capacity of the device. When used in high power circuits these devices are typically used for their electrical isolation as drivers for larger discrete transistors. Adding the large discrete transistors increases the cost considerably, though. Compounding the limited heat dissipation of the integrated SSRs is the increasing on-resistance of MOSFETs as the voltage rating increases. The on-resistance, denoted as rds-on in datasheets, is the resistance of the conduction channel measured from the drain terminal to the source terminal. For voltage ratings less than 20 V the rds-on of MOSFETs are typically less than 1 ohm leading to a maximum current carrying capacity of a few amperes. For a 400 V rated device, however, the rds-on is approximately 10 ohms, limiting the current carrying capacity to about 200 mA.

Because the rds-on of a MOSFET increases with temperature, the devices can be operated in parallel for increased current carrying capacity with no additional circuitry to ensure uniform current sharing between devices. The cost of multiple devices is a consideration with this approach, however, and at some point higher current levels can more economically met with discrete power devices. For high-voltage applications multiple, lower voltage devices can be operated in series, but there doesn't appear to be any advantage to this over multiple high-voltage devices operated in parallel. In fact, the team learned from one semiconductor manufacturer, Solid State Optronics, that this technique of series/parallel operation of MOSFET dies is already exploited in the manufacturer of their SSRs to obtain the range of voltage and current carrying capacities of their product line with the ultimate limitation being the power dissipation of the package.

5.1.4. Ballast connections

For the load-shedding ballast application, the MOSFET switch must carry the full current of the lamp or lamps in a multiple lamp ballast. That current ranges from 220 mA per lamp for a high ballast factor ballast to 160 mA per lamp for a low ballast factor ballast. Since 2- and 3-lamp instant-start ballasts have parallel lamp operation with one end of each lamp being connected the same circuit position, dimming of all the lamps can be done by connection to the common side line. Four-lamp instant-start ballasts typically operate the lamps in pairs so the dimming circuit has to be connected in two locations to dim all four lamps.

5.1.5. Fail-safe operation

The default operating mode of the load-shedding ballast is the full current condition, and if there should be any malfunction of the load-shedding circuitry, or loss of the load-shedding signal, the ballast should operate the lamps at full light output. Full light output corresponds to the switch across the capacitor to be closed, thereby shorting the capacitor. In addition, during starting of the lamp, when power is applied to the ballast, the switch should also be closed to start the lamps at full power. For these reasons a normally closed relay is highly preferable to a normally open relay. Not that a normally open relay could not be made to work, especially if one had access to the internal circuitry of the ballast, but the design would likely be more complicated and less fail-safe.

Both normally open and normally closed MOSFET SSRs are available, but many manufacturers do not offer normally closed versions and the ones that do have a more limited selection of voltage and current ratings for the normally closed version than for normally open relays. The project team heard from one manufacturer that the semiconductor industry is making fewer and fewer normally closed SSRs. To make a normally closed MOSFET SSR requires a different type of MOSFET than what is used in a normally open SSR. Most MOSFETs are enhancement-mode devices meaning that the gate has to have a positive voltage (1 to 3 V) for the MOSFET to conduct current, otherwise the MOSFET has a high impedance. Different doping on the gate of the MOSFET produces a depletion-mode MOSFET where the channel conducts at zero gate voltage and a negative voltage is needed to switch-off the device. Normally closed SSRs are made from depletion-mode MOSFETs that allows them to conduct when no power or drive signal is applied to the gate.

If a normally open SSR were used for the load-shed dimming circuit the gate voltage would need to be provided before the ballast starts the lamp in order to bypass the dimming capacitor. Since all the circuitry of the load-shedding ballast is powered from the same AC line, both the lamp operating circuit and load-shedding circuit get activated at the same time. To guarantee that the SSR were closed before the lamp starting sequence begins, the lamp starting would need to be delayed. This would add cost to the ballast and compromise the instant-starting feature of instant-start ballasts.

5.1.6. Final dimming design

Figure 4 shows the schematic for the dimming circuitry used in the add-on load-shedding demonstration devices. In this design, six 400 V SSR devices are used in a series/parallel configuration to achieve the voltage and current handling requirements. Two SSRs are packaged in one 8-pin DIP, and the pairs of relays per package are operated in series to obtain an 800 V breakdown limit. When operating devices in series it is important that switching occurs at precisely the same time, or else the full voltage will be impressed across one device. Due to device variations it is impossible to have the devices switch at the same exact time, even when triggered from the same control signal, so over-voltage protection is needed across the output terminals of each device to limit the voltage to slightly less than 400 V. Bi-directional transient voltage suppressors (TVS) with a breakdown rating of 350 V are placed across each SSR device. TVS act like back-to-back reverse-biased zener diodes and clamp the voltage at their breakdown limit. Therefore, if one MOSFET switches before the other one connected in series, the TVS across the device that did not yet switch will conduct to keep the voltage less than 400 V. The TVS conducts current for only a short period of time until the second SSR switches; less than one millisecond. Because it conducts for such a short period of time the energy input to the TVS is very low. The TVS devices in the design are rated for 500 W which is far in excess to the power that the ballast puts out.

Each SSR device is rated at 200 mA, which is just barely enough to handle the current of one lamp operated by a normal ballast factor ballast. A high ballast factor ballast would have a lamp current of 210 to 225 mA. With three SSR devices in parallel the dimming circuit can handle 600 mA, or up to three normal to low ballast factor operated lamps, or two high ballast factor lamps. It is unfortunate that no SSR could be found that supported higher currents than 200 mA per device and thereby requiring so many

multiple devices to be used. Further development work to lower the price of the dimming circuit would involve designing a MOSFET switch out of discrete components that had a current carrying capacity of one ampere or more.

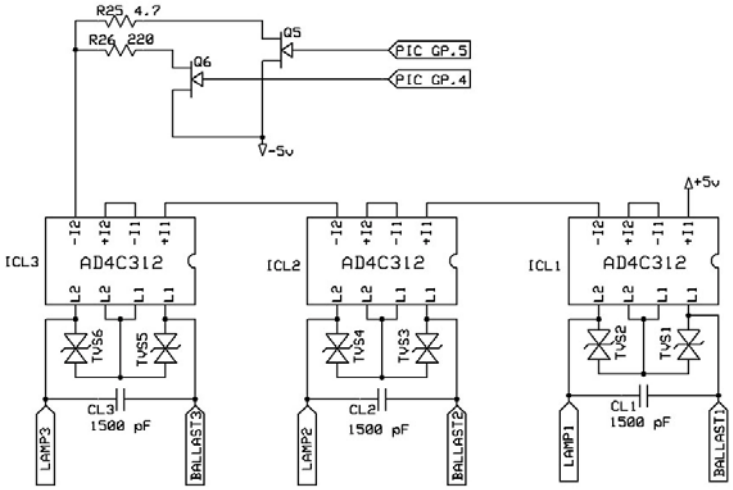

Figure 4. Dimming circuit of load-shedding add-on prototype

5.1.7. Driving the SSRs

To have the lamps dim with a perceptually smooth, ramping transition between full light output and dim, a PWM scheme is used to drive the SSRs. The frequency and duty cycle range of the PWM are constrained by both human perceptual abilities and the switching speed limitations of the SSR.

The human visual system is maximally sensitive to flicker at a frequency of approximately 15 Hz. As the frequency of the light modulation is increased, flicker becomes less apparent, and then at the critical flicker fusion frequency (CFF), flicker is not longer perceived. CFF occurs in the range from 40 to 70 Hz depending on the size and location of the stimulus within the field of view with large stimuli in the periphery having the highest CFF. Therefore, to avoid the perception of flicker for a large light source that is not directly viewed, the frequency of PWM must be greater than about 70 Hz. The result of this analysis is consistent with the refresh rates of computer monitors. At a 60 Hz screen refresh rate many people are bothered by flicker, but raising the refresh rate of the monitor to 70 or 80 Hz eliminates this problem.

The SSRs have a turn-off (applying drive current to the LED) response time of 2 ms and a turn-on (removing drive current) response time of 0.1 ms. If a drive signal is modulated faster than the devices can turn off or turn on, then the switch will either remain in the closed position, or take on an intermediate resistance value between being fully closed (~ 10 ohms) and fully open (>10^8 ohms). With an intermediate value of resistance, the relay switch dissipates considerable power and is destroyed within a few seconds, so this condition must be avoided.

Effective PWM for flicker-free dimming requires response times less than 1 ms. At first this might seem overly demanding since 1 ms response time corresponds to a maximum switching frequency of 500 Hz, but to accurately obtain a smoothly varying range of precise changes in duty cycle requires switching speeds much greater than the full-wave (on plus off period) frequency of 70 Hz. For example, with a PWM full-wave frequency of 100 Hz and a duty cycle ranging from 10% to 90% requires a switching response time of roughly 100 Hz/0.1, or 1 ms. Essentially, the device must turn on and off within 10% of the time period of 100 Hz. Slower response times limit the range of possible duty cycles which in turn makes the dimming choppier. If the duty cycle can be lowered to only 20%, then the appearance of the dimming transition would be a sudden drop in light level of 20% times the 33% load-shed change, or 7%, which would be quite noticeable since it occurs suddenly. From a visual evaluation, a sudden change in light output of less than about 3% seems acceptable.

Testing of the SSRs revealed that the turn-off times result from two distinct phenomena. First, there is a delay between when the drive current is applied and before any change in resistance occurs. Second, the resistance change is not instantaneous, but occurs as a continuous rate of change over a short time period. To prevent the switch from overheating, it is important that the time spent at an intermediate resistance value be kept as short as possible. Both of the response time constituents are affected by drive current, the more drive current, the shorter the response delay and the faster the resistance transition. Minimum drive currents of a few milliamps result in response times of a few milliseconds, while drive currents in the 20 to 40 mA range yield response times of less than one millisecond. Unfortunately, providing drive currents greater than a few milliamps requires a more substantial power supply than what was being used in the load-shedding ballast receiver. To increase the power supply size would add considerable cost and size to the device as well as decrease the overall efficacy of the load-shedding ballast.

The inexpensive transformerless power supply design of the prototype add-on device is capable of providing about 6 mA of current at 10 V. All the SSR devices can be driven in series, and considering the 1 to 2 mA required by the receiver circuit leaves only four to five milliamps to drive the SSRs. At this low a drive current the switching times are too slow to provide flicker-free PWM dimming, and worse yet, the relatively slow resistance change of the SSRs led to overheating and malfunction of the devices.

A solution to the drive problem is to pulse the input of the SSRs with a large current (40-60 mA) for about a millisecond period of time (until it switches), then reduce the current to about 2.5 milliamps so that the SSR holds its state. The power supply can provide this momentary pulse of high current without a significant voltage drop due to the 470 microfarad energy storage capacitors used in the supply. With the availability of the microprocessor and an available output pin, this switching scheme was easy to implement with only one additional resistor required and some extra lines of software code. An oscilloscope trace of the drive current to the relays is shown in Figure 5.

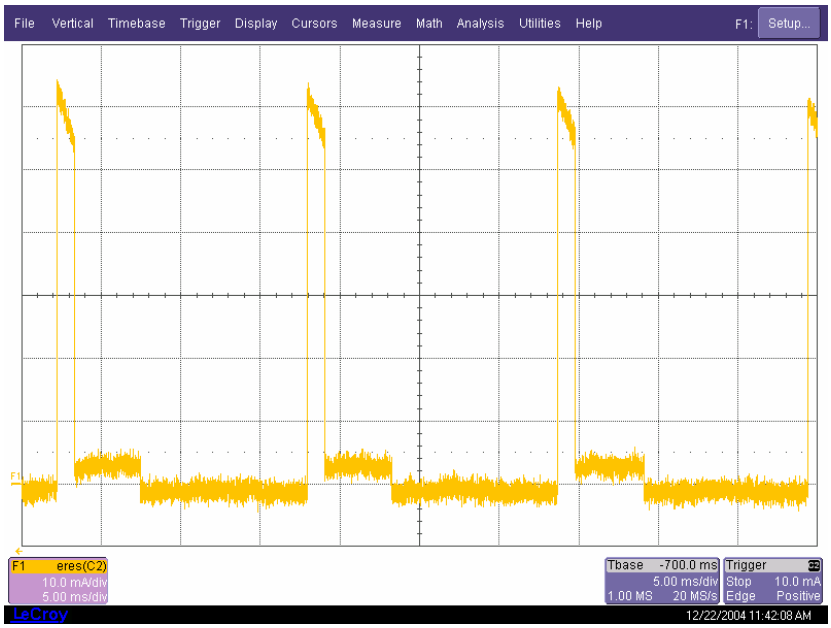

Figure 5: Current drive of SSRs

This oscilloscope trace was captured 700 ms into the dimming transition and shows the state of the PWM. At this point in the dimming transition the SSRs are driven for approximately 6 ms of the 15 ms period. Note the 60 mA pulse of current for approximately 1 ms needed to speed-up switching of the SSRs, followed by about 5 ms of current at approximately 2.5 mA.

5.1.8. Cost of dimming circuit

Component costs for the dimming circuit are listed in Appendix D. Absent from the list is the cost of the microprocessor because its cost is included with the cost of the receiver (next section). The parts cost for the dimming circuit totals $12.74 for quantities of 1000, and $9.42 for quantities in the millions, for producing the circuit exactly as depicted in the schematics.

For the prototype circuit, the team paid $3.99 (quantity = 100) for each of the dual MOSFET switch packages used to dim the fluorescent lamps. This price would drop for higher quantities, but no more were available from this particular manufacturer. Another manufacturer's price is $3.50 each, quantity = 1000 and $2.77 each, quantity 100,000. The same type of device in the more common normally-open configuration is offered at about one third the cost. Still, this cost is much too high for low-cost requirements of the load-shedding ballast. Alternate dimming circuits, or methods would need to be employed by ballast manufacturers to effect dimming, such as designing the circuit using discrete components. Conversations with the ballast manufacturing partner suggested that an inexpensive method for adding dimming capability to instant-start ballasts is not a difficult hurdle to overcome. And, indeed, as of November 2004, the manufacturing partner produced a dimming circuit using discrete MOSFETs and optical isolators with a parts cost of approximately one dollar.

5.2. Power Line Carrier Signaling

5.2.1. Description of control system

The control system for an automated demand responsive lighting system aggregates the small, widely distributed individual lighting fixtures of the lighting load so that it functions as a single, large electric load, and provides access to controlling that load. Since the amount of aggregation varies from building-wide, to community-wide, to an entire region of the country, (e.g., all of the southwestern United States), and since control can be shared by many different local and regional authorities, from individual building owners controlling their own building's demand, to ISOs protecting the reliability of the grid, the entire control system is potentially very complicated and diverse. To discuss control systems clearly and intelligibly, therefore, requires breaking down the control system into functional, hierarchical pieces that combine together to make the complete system. Since this project concerns mainly the hardware development of devices near the fixture, the logical way of separating the elements of the control system is by the physical proximity to the lighting fixture.

5.2.2. Three-domain architecture

It is unlikely that one communication technology could serve all the needs of a demand-responsive lighting system, spanning the distance from a utility or grid operator to a fixture in a building potentially hundreds, if not thousands of miles away, while at the same time satisfying cost, reliability, and security issues and supporting the desirable features at each different level of control. Thus, it was clear from the start that many different communication technologies would be brought together to form the complete system. Separating the signal path into three domains based on proximity to the fixture takes advantage of the fact that certain communication media are better suited for particular environments than others, and proximity to the fixture roughly corresponds to the level of cost, reliability, security and features required by the communication media. The three domains are:

- From the signal initiator (e.g., utility, ISO, corporate headquarters) to the primary receiving location at a building or facility (**A to B**).
- From the primary building receiving location to the branch circuits supplying power to the lighting loads (**B to C**).
- From each branch circuit panel to the individual fluorescent lamp ballasts and other lighting control gear (**C to D**).

The first two communication domains are discussed in more detail, with examples of different implementation schemes, in the CL&P Load-Shedding Ballast Report (LRC 2003c). Suffice it here to say that many commercial options are available for communication within these first two domains. In fact, ongoing research by groups such as the California Demand Research Center seeks to network together large facilities and buildings over the internet using XML protocols (Watson et al. 2004). (This study points out the complication of getting signals through the many different layers of control protocols and networks that are commonly used in buildings. The hardware functionality seems to be in place, but the interoperability of different protocols and security issues need to be worked out.)

The third domain, from the branch circuit distribution panel to the individual lighting fixtures and ballasts, is the focus of this study. It is this level of signal distribution that separates lighting from other types of large loads that are useful for demand management. Other loads, such as heating, ventilation, and air conditioning (HVAC), and manufacturing processes tend to be individually large to begin with (thousands of watts), and tend to already have associated control systems that permit centralized monitoring and control. Lighting, on the other hand, consists of individually small loads (30 to 120 W per fixture) that are typically controlled by a local, manually operated switch. Lighting also is spread uniformly throughout a building and is present in both the main occupant spaces, as well as in minor spaces, such as utility corridors, closets, bathrooms, and equipment rooms. Though in many commercial buildings the majority of the fluorescent lighting is confined to dedicated 277 V circuits, this is not always the case and fluorescent lighting is often on the same circuits as other building equipment. These characteristics of the lighting load make this final signal distribution domain a challenging problem.

The power lines offer an existing infrastructure of wiring that can be exploited for communication purposes between appliances. Unfortunately, the power lines within buildings have proven to be a very difficult medium to exploit for reliable commercial data transmission. This is due to a number of reasons attributable to the fact that power lines are optimized for low frequency power transmission with no regard or provisions for other uses.

Signal attenuation is highly variable depending on the type of wiring in use (e.g., BX cable versus individual wires in conduit), the topology of the wiring layout and what is actually attached to the line. Equipment with line filters, such as certain power strips, office equipment, and switching power supplies, can knock out reception in the vicinity of the device and downstream of the transmitter.

Interference and electrical "noise" are major obstacles with power line signaling. It is not uncommon for noise levels to exceed 100mV at frequencies above 100 kHz, and be of even greater magnitude for lower frequencies. If near the carrier frequency of the PLC receiver, noise will effectively jam the device. High gain is needed to overcome attenuation, but high gain leads to easy jamming when noise is present. Automatic gain control (AGC) might help in circumstances when the signal strength is high, but for the combined effect of a highly attenuated signal and the presence of noise AGC is not entirely effective. A large dynamic range of response is needed to overcome both attenuation and noise.

5.2.3. Signaling requirements

The signaling requirements for a load-shedding system were first ascertained in an earlier project for Connecticut Light and Power. The requirements were summarized as follows.

- One-way communication: from central transmitter to ballast
- One bit of information: On/off binary signal
- Less than 10-minute response time (extremely low speed compared to voice/data)

- Reliability
- Within building: Does not reduce the reliability of luminaries for providing full light output, but sporadic failures to enter into load-shedding mode are acceptable
- Over utility/ISO's service area: Internet/phone line is acceptable as made evident in existing demand reduction programs
- Does not conflict or interfere with existing ballast functions, or other building control systems

These requirements were developed from a review of existing ISO demand reduction programs and researcher rationalizations based on essential performance. These requirements have remained unchallenged during the course of this project except for the first one specifying one-way communication. At least a couple of attendees at the March 2003 California roundtable thought that some type of status reporting from fixtures, or groups of fixtures would be very desirable, especially for troubleshooting. This status reporting would require two-way communication. In the communication domains where existing communication services and technologies are used, A to B and B to C, this presents little additional effort since most systems are already designed to accommodate two-way communication. However, in the B to C domain, adding two-way communication would incur a large cost both in hardware costs and in the added complexity of the system, e.g., software and commissioning. Besides, it is the authors' opinion that information on the status of each and every lighting fixture regarding whether it is in load-shed operation or not would rarely, if ever, be used and therefore would not be worth the cost. Remember, this status feedback is not information that the utility, or ISO would use in determining the amount of load shed. That information would come from the building's recording watt-hour meter.

Recognizing that some type of status feedback is useful for verifying proper operation of the system, and to aid with trouble-shooting, two-way communication up to the B to C domain should be included. This would isolate problems to specific branch circuits, each of which would be powering on the order of 100 to 1000 ballasts.

The 10-minute response time for the system is important and worth elaboration. This response time puts lighting load shedding on an even par with peaking power plants and other generation resources. In other words, 10 minutes is the threshold for which utilities consider the reduction a resource equivalent to bringing a generator on-line. Being an equivalent resource to generation forms the basis for the economic analysis described previously. The 10-minute response time essentially requires a fully automated response. It not only includes the time to communicate a signal from the utility to the load, but also the time needed to reduce that load. The ability to immediately reduce light levels (within a few seconds even considering a smooth ramp-down of illumination levels) is one of the great advantages of lighting load-shedding. Other forms of load shedding, such as shutting down plant processes, often require much more time.

While cost is not mentioned here as a performance requirement, it must be remembered that, according to the economic analysis section herein, the entire cost of the load-shedding system must not exceed $10 per ballast. Of that $10, a significant amount will

be used to add the dimming functionality to the instant-start platform. Adding the cost constraint to the performance requirement is what makes this an especially challenging project.

5.2.4. Existing power line carrier technology

PLC communication and signaling has been in use since the 1930's for utilities to relay messages and activate control gear across the high voltage electrical grid. Inside buildings PLC systems have been used for decades to synchronize clocks and provide voice intercom services and other building control functions. With the introduction of inexpensive low-voltage semiconductor electronics, the widespread use of radio technology, and advances in network technology where many systems can exploit the same high-bandwidth provided by an inexpensive network of twisted pair wires, the power lines have been used less and less as a communication medium.

One area where power line technology is still being actively developed is the home automation market. Recently this market has expanded to include high-bandwidth communications for computer networks in the home. The home environment is much better suited for PLC data applications than commercial and industrial environments because distances tend to be much shorter, interference and electrical noise levels are lower, and perhaps requirements for reliability are less stringent. For basic, low bandwidth home automation needs the relatively simple X-10 protocol works effectively judging by its sustained place in the residential market.

For commercial and industrial applications, X-10 type protocols have been found to be too unreliable as made evident by their lack of use in these applications. More sophisticated and elaborate devices and protocols are available, such as CeBus and Lonwork's Echelon. These systems make extensive use of digital signal processing to reliably detect and distinguish weak signals from noise, making them quite expensive. In addition to the cost of the special purpose digital signal processors, the power supply and supporting electronics in these systems add up to an expensive solution. A cost of tens of dollars per node is acceptable for large individual loads, such as water heaters, air conditioning units, etc., but would be impractical for controlling a 60-W florescent lamp ballast.

Because of the extremely low-cost requirement placed on the load-shedding ballast, and because it must work within commercial and industrial environments, no existing off-the-shelf PLC technology was identified that could be used for signaling a load-shedding ballast. This came as no surprise since load shedding has such unique signaling requirements. Most other recent PLC technology is concerned primarily with communicating data across the power line, and doing it as quickly as possible. For example, in home automation, when someone flips a switch to turn on the room lights, the room lights must come on immediately (within a few hundred milliseconds). In addition, there must be a means for addressing individual fixtures and appliances which means that considerably more than one bit of data must be transmitted and received. Because the load-shedding signal was conceived as a broadcasted signal with no addressing, and because the time response is orders of magnitude longer than that required by other communication and signaling applications, researchers at the LRC

expected that considerable cost savings and increased reliability could be obtained with a custom solution.

In a related project, Instant Snap-in Load-shed Device for Incandescent Lighting, funded by the state of California's Energy Innovations Small Grant program, existing and forthcoming PLC products were reviewed for their suitability for this load-shedding application. A table from the above report that lists the products found, and some information about them, is included in Appendix C.

The approach taken by the LRC in developing a PLC-based signaling method was to take advantage of the relatively long time available for receiving a signal by using signal conditioning techniques that improve the signal-to-noise ratio by acquiring the signal over long periods of time. These techniques amount to reducing the range of frequencies, or bandwidth, to which the receiver responds to a very limited, narrow range centered on the frequency of the transmitted signal.

Since the signaling to ballast is strictly one-way (the ballast is only a receiver, not transceiver), the transmitter and receiver can be optimized for their functions and cost constraints; the receiver costs must be less than a few dollars, while the transmitter cost can be in the $50 to $100 range because its cost is spread over hundreds of ballasts. Therefore, the signal characteristics can be chosen so that it makes detection simple and inexpensive even if it adds some complication and cost to the transmitter.

5.2.4.1. The LRC prototype circuit

PLC Signaling Method: Sub-harmonic amplitude modulation of a high-frequency carrier with phase stepping

Detection Method: Sub-harmonic phase-synchronous integration with post integration frequency detection of the phase stepping frequency.

The approach to developing the signaling method was to limit the cost associated with the receiver as much as possible by placing the burden of signal complexity on the transmitter where cost and low power consumption are not as critical. Still, in order to achieve the detection requirements, the receiver must make use of some sophistication.

Phase synchronous detection is a powerful method of detecting weak signals in the presence of noise and interference. Different forms of it go by various names such as lock-in detection or phase detection. The limitation of phase detection is that the receiver needs phase-synchronizing information so that it can synchronize its integration periods to the signal that it is detecting. This presents a real problem for power line communication because the transmitter and receiver are separate devices that are only connected by the power lines. If a synchronizing signal could be sent, then that signal could by itself provide the load-shedding signal with no need to transmit anything else. The 60 Hz power frequency can serve as a synchronizing signal, but integration periods over exactly one power line period would do little to reduce power line noise that is periodic with the AC power frequency. Most noise, as it turns out, is periodic with the power line. This is not a coincidence, but the result of many electronic devices that perform switching that is periodic with the AC line frequency such as incandescent dimmers, motor controls and heating element controllers.

The solution to avoiding 60 Hz noise is to synchronize to a lower frequency that is a subharmonic of 60 Hz. If the modulation frequency is a subharmonic of 60 Hz, the 60 Hz associated noise is completely canceled over one integration period. A subharmonic is a frequency that can be divided into another an exact number of times; thus, 7.5 Hz is a subharmonic of 60 Hz, being exactly 1/8 the frequency. The relatively slow modulation rates associated with 60 Hz subharmonics limits the rate at which information, or data, can be transmitted to what is considered extremely slow by today's standards (on the order of one bit per second), but the slow information rate is perfectly acceptable for a load-shedding system with a required response time of up to several minutes.

Synchronizing signals that are subharmonics to the synchronizing clock signal does not guarantee that the signals will be matched in phase. Because the synchronizing clock is a multiple of the operating frequency, two devices can phase align to any one of the clock cycles occurring within one period of the subharmonic frequency. For example, the eighth subharmonic contains eight cycles of the clock waveform and so separate devices have a 1/8 probability of aligning to the same cycle.

A solution to this problem is to have one of the devices, say the transmitter, advance or delay its phase by one clock cycle every so often. Eventually the two devices will phase align for a period of time. When the devices are phase aligned the received signal will be at maximum amplitude. When the two devices are exactly 180° out of phase, the signal amplitude will be at a minimum negative value. At 90° phase difference, the received signal will be zero, and so on. The received signal amplitude will trace out a sine wave pattern as the phases go in and out of alignment. The period of this sine wave pattern is equal to the time period that the transmitter lingers at a particular phase angle multiplied by the inverse of the subharmonic used for modulation. For example, lingering at each phase interval of the clock frequency (60 Hz) for four seconds and using a modulation frequency at the 1/8 subharmonic of 60 Hz produces a received sine wave with a period of 32 seconds. Figure 6 shows the timing of the amplitude modulation for such a scheme.

The low frequency sine wave signal at the receiver resulting from this method of subharmonic synchronous detection is a unique, highly noise resistant signal that is suitable for triggering the ballast to go into and out of the load-shedding condition.

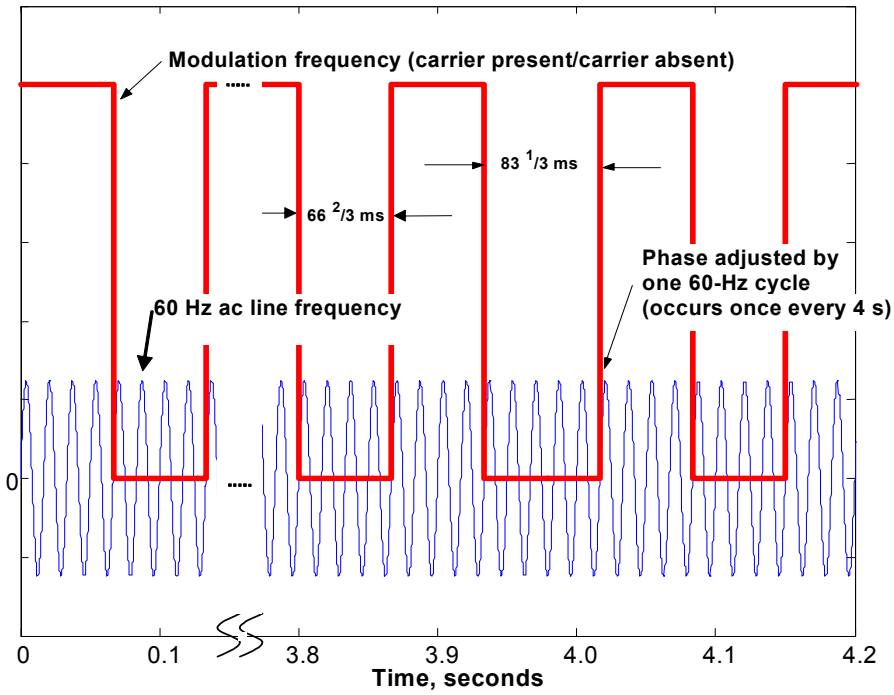

Figure 6. Timing diagram for subharmonic synchronous detection of PLC signals

5.2.5. Circuit description

The receiver consists of the following functional blocks.

- Coupling to the power line
- High-pass filtering to reject the 60 Hz power signal
- Tuned amplification
- Signal rectification
- Low-pass filtering
- Amplification
- Synchronous detection
- Integration
- Level detection (comparator)
- Post integration frequency detection
- Dimming logic and timing (PIC microprocessor)

A block diagram showing the functional blocks of the receiver is shown in Figure 7. A complete circuit schematic showing how the receiver is implemented is shown in Appendix D. Each major block is described below.

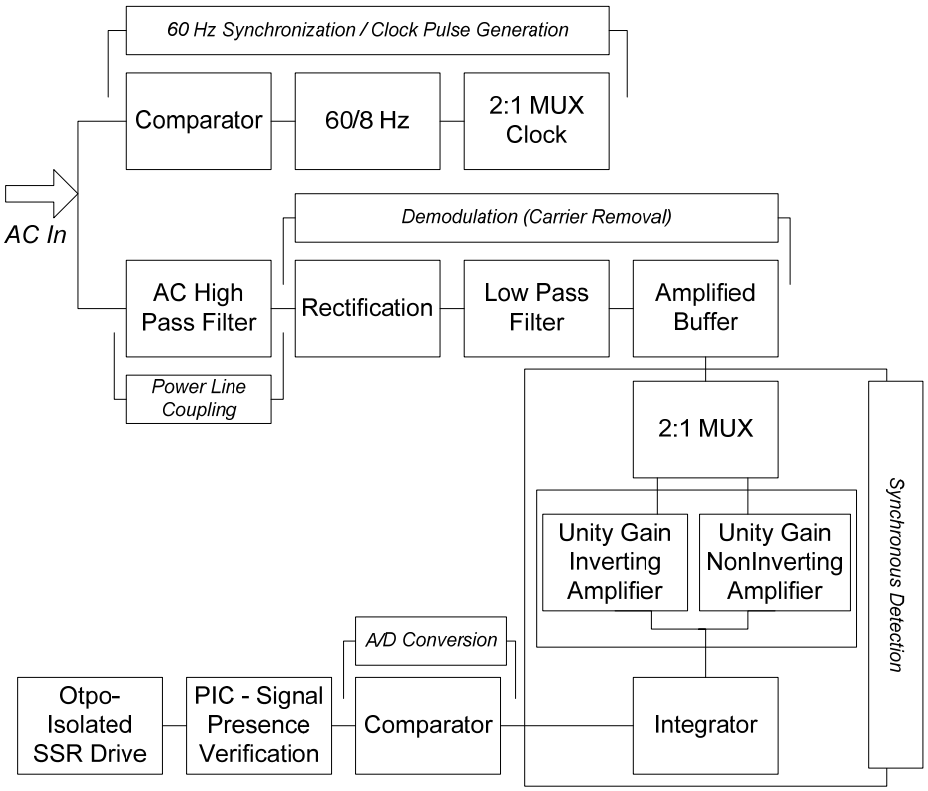

Figure 7. Block diagram of load-shedding receiver

5.2.6. Power line coupling

Coupling to the AC power line is achieved with two capacitors and two resistors that form a high-pass filter that greatly attenuates the 60 Hz power signal, while passing the signals with frequencies above 130 kHz with near unity voltage gain. The coupling circuit is shown in Figure 8. Filters with much improved frequency responses are possible by using inductors in place of resistors, but the cost of inductors for use at these relatively low frequencies is much more than that of resistors: 0.5 cents or less for a resistor compared to more than 50 cents for an inductor. Transformer coupling offers the possibility of even better coupling with higher gain of the desired transmitted signal and sharp cutoff frequency response, but the cost of transformers for this purpose is even greater than inductors. Another benefit of transformer coupling is galvanic electrical isolation between the line and the rest of the circuit, which most likely makes it the method of choice for most communication PLC systems and worth the expense. In this application, however, the receiver is not being connected to any other equipment, other than the components that are contained inside the ballast case, so there is no need for galvanic isolation of the receiver, at least for safety reasons.

An important disadvantage of an RC coupling circuit compared to one employing inductors and transformers is that capacitors are not as inherently rugged as inductors and transformers in terms of susceptibility to high voltage transients. Underwriters

Laboratory places strict requirements on capacitors that are employed across the power lines designating them as type X1 or Y1 capacitors. Capacitors with this designation are more expensive than other types of capacitors of equal voltage and size. It is thought that only one of the capacitors used in the coupling circuit needs the XI classification. In addition to the X1 classification, voltage transient protection for the input capacitor might be necessary for a robust design. Care must be taken, however, to avoid attenuation of the high frequency signal when using transient voltage protection.

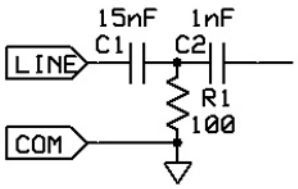

Figure 8. Line coupling circuit

The value of the input capacitor was determined by the desired impedance of the RC filter. The value is a compromise between wanting a relatively low impedance on the receiver circuit side while needing to maintain a relatively high impedance on the line side, so that having multiple (100s) of such devices connected to line will not significantly attenuate the signal. A second consideration was the cost of a particular size capacitor; the larger the capacitor value, the more expensive and physically larger it is. The prototype uses a 15 nF capacitor with a 100 ohm resistor providing an input impedance of nearly 100 ohm (dominated by the resistor at 150 kHz), and a -3dB cutoff at 106 kHz. The second stage of the RC filter has approximately 15 times the impedance of the first stage, to minimize loading effects, with a capacitor value of 1.0 nF, and resulting in an output impedance of 1000 ohm.

5.2.7. Tuned amplification

Due to the severe and unpredictable signal attenuation on the power lines, signal strength measured at the ballast location is commonly only a few mV even when the signal measured at the transmitter is several V. Amplification is needed to bring the coupled signal up to a level suitable for further conditioning and detection. With gain levels of 1000 or more, it is imperative that only the signal of interest is amplified, otherwise noise will greatly overpower the amplifier. A tuned amplifier is required that has a high gain only for a small range of frequencies about the transmitted signal. A single transistor amplifier was chosen for its simplicity, low cost, low power requirements, and frequency response. The tuned amplifier circuit schematic is shown in Figure 9. The amplifier circuitry uses a tuned LC tank circuit to set the center frequency with the pass band determined by the quality of the LC components and the input impedance of the following stage. The measured frequency response of the tuned amplifier is shown in Figure 10.

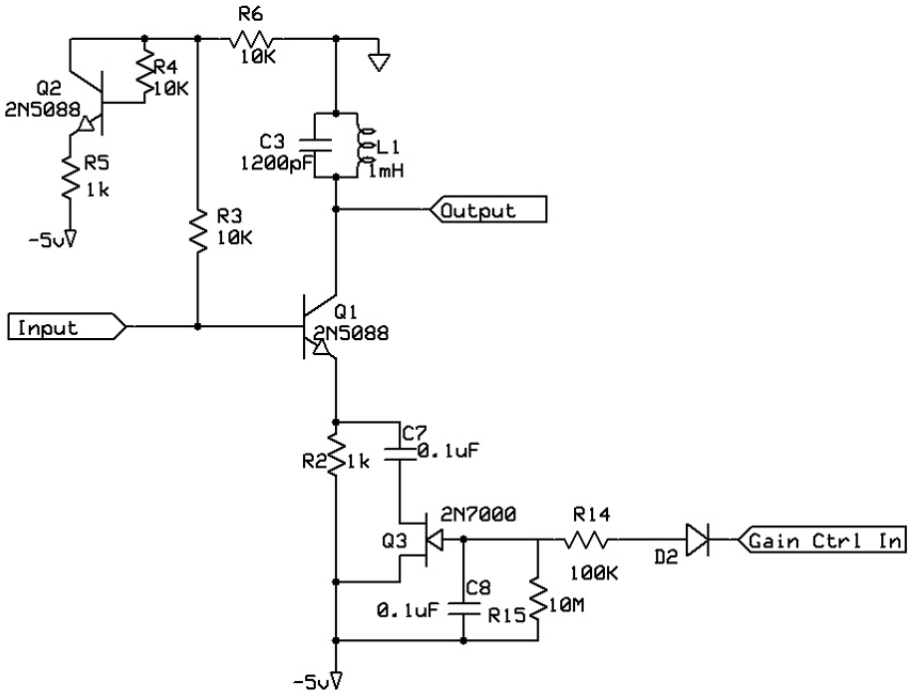

Figure 9. Tuned amplifier circuit

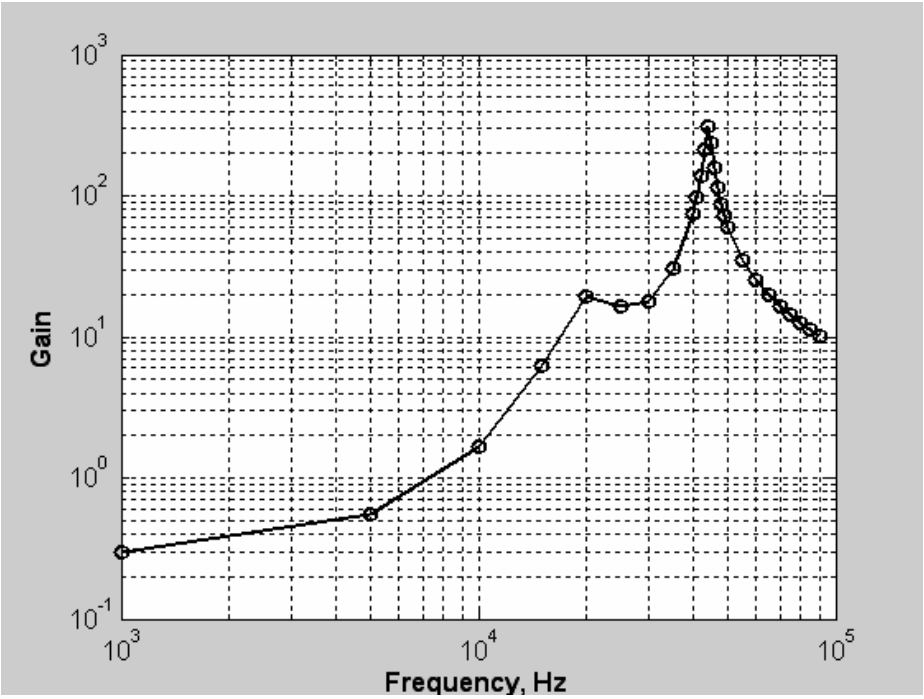

Figure 10. Frequency response of tuned transistor amplifier

The center frequency is 45 kHz, which was later changed to 145 kHz.

A significant improvement to the simple tuned amplifier is the addition of automatic gain control. By replacing a fixed emitter resistor with a variable resistance, the gain of

the transistor amplifier can be varied over at least two orders of magnitude. An N-channel MOSFET was used as the variable emitter resistor with its gate driven by an inverted and amplified signal found later in the circuit. Thereby, this arrangement of automatic gain control uses negative feedback to turn up the gain when little or no signal is detected, and turn down the gain when the signal level is high to avoid saturation. The automatic gain control has a time constant of a couple seconds so that its action does not defeat detection of the 7.5 Hz modulated signal.

5.2.8. Signal rectification and low-pass filtering

The high frequency carrier is removed by rectification followed by low-pass filtering. Figure 11 shows the circuit schematic. For simplicity and low cost, a single diode, half-wave rectifier was used in the prototype. The disadvantages of this type of rectifier are that half of the power is lost, and that signals less than about 0.4 V are not passed when using standard silicon diodes. The project team experimented with germanium diodes and Schottky diodes with forward voltage drops of less than 0.2 V, but due to the increased leakage of these devices, combined with the high impedance of this stage of the circuit, the performance was only marginally better and not worth the added cost of these less common components. Full-wave rectification would double the forward voltage drop, but active rectification schemes were judged not to be worth the extra circuit complexity and component cost. Certainly, active rectification should definitely be reconsidered in an integrated circuit approach.

The output of this stage is the low frequency (7.5 Hz) phase synchronous modulation. This signal is then amplified by a factor of 30. High amplification is easy to obtain with inexpensive op-amps because the frequency is so low. Signal fidelity is not an issue since only the presence or absence of the 7.5 Hz signal is necessary for detection. The fact that for input signals of moderate strength the output is clamped at the power supply limit is therefore of no consequence.

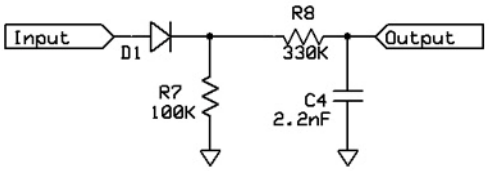

Figure 11. Signal rectification and low-pass filtering circuit

5.2.9. Synchronous detection

The next circuit stage is synchronous detection of the 7.5 Hz signal. Synchronous detection is achieved by alternately inverting (changing sign) and not-inverting the signal as controlled by a clock signal that is synchronous to the signal being detected, and then integrating the output over a period of time significantly longer than the period corresponding to 7.5 Hz. Signals that are not correlated with the 7.5 Hz clock signal tend to sum to zero as negative and positive values are integrated, while signals that are correlated with the clock signal are always of the same polarity and grow larger in magnitude as integrated over each successive clock cycle. The integrator action in the

circuit is accomplished by a second-order low pass filter. The circuit schematic is shown in Figure 12.

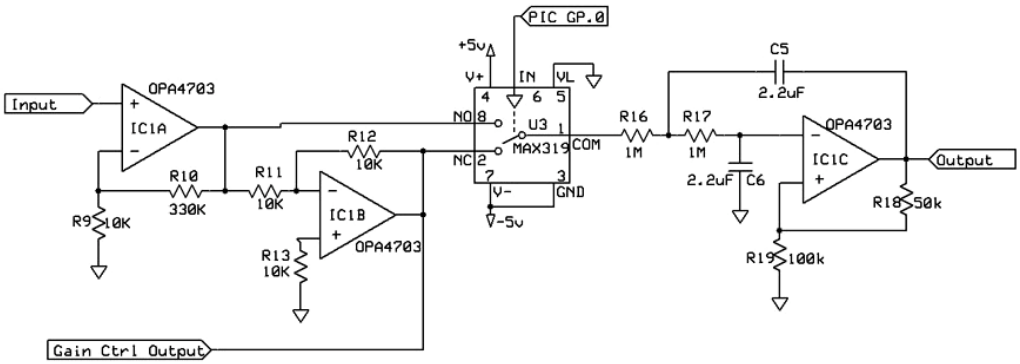

Figure 12. Synchronous detection circuit

The 7.5 Hz clock signal is generated by a divide-by-eight operation on a 60 Hz signal that is derived from the power line and processed by the PIC microprocessor (GP.0 pin). This 7.5 Hz clock signal is phase aligned to the 60 Hz power line, meaning that zero-crossings of the power line voltage occur at the same time as clock transitions, but there are multiple clock transitions (eight) per 60 Hz cycle. Because 60 Hz is an exact multiple of 7.5 Hz, the 7.5 Hz signal is described as a sub-harmonic of 60 Hz. The 7.5 Hz clock signal in the receiver can synchronize to any of the eight 60 Hz cycles within one period, so there is only a one-in-eight chance that the clock signal will be in phase with the transmitted 7.5 Hz signal. If the transmitted signal and receiver clock are in phase, the receiver output is maximized. For a 180° phase shift the signal is also maximized, but negative, and the signal integrates to zero if the phase is 90° or 270°. The receiver has no way of distinguishing between a no-signal condition and a 90° or 270° phase shift.

The solution to this problem is to have the transmitter periodically change the phase of the 7.5 Hz modulated signal being broadcasted by 1/8 increments. Eventually, the transmitter and the receiver clock will be in phase and the signal will get detected. This solution takes advantage of the relatively slow time response requirements for load shedding because the transmitter might have to cycle through eight phase changes before it and the receiver become phase aligned. The transmitter must stay in one particular phase for a time significantly longer than one 7.5 Hz period for the synchronous detection method to work effectively. A four-second period was chosen as the dwell time for each phase condition, resulting in a maximum receiver response time of 32 seconds.

The received signal is only maximally present during the four seconds of transmitter dwell time at a particular phase. During the remainder of the period the signal is varying in a stepped sine wave fashion as the clock and transmitted signal go in and out of phase. A comparator is used to determine the zero-crossings of this stepped sine wave. Applying positive feedback to the input of the comparator provides about 50 mV of hysteresis to avoid multiple zero-crossing signals due to noise. The comparator circuit and the remaining digital portion of the circuit are shown schematically in Figure 13.

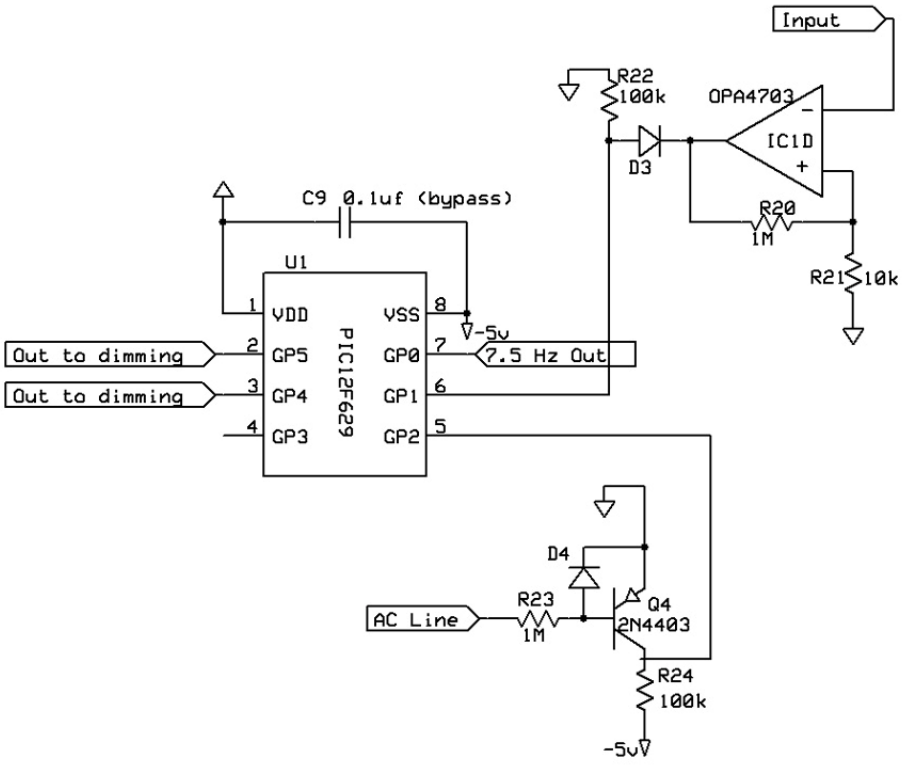

Figure 13. Digital portion of receiver circuit

The output of the comparator is a very unique and reliable signal that indicates the presence of a load-shedding signal. This signal, however, is not suitable for triggering the ballast to dim because it is a periodically varying signal, and because of the conditional requirements that the ballast must always start the lamps at full power and operate them at full power for 20 seconds after starting. In addition, applying other criteria to the signal before dimming the lamps can reduce even further the possibility of false triggering, or falsely returning to the full light output condition. The output of the comparator serves as input to an 8-bit digital microcontroller which in turn uses logic and timing to obtain a signal suitable for triggering dimming. The microcontroller does further timing checks on the comparator output to verify that the zero-crossing transitions occur with a period of 32 seconds (± 4 seconds) before triggering load shedding. To do this timing check, the comparator must receive at least three zero-crossing signals which can happen in as little as one waveform period (32 seconds), but no more than 1-1/2 periods (48 seconds). To decrease the probability of a false trigger, the timing criteria can be tightened, and the number of consecutive zero crossings meeting that criterion can be increased, but this is done at the expense of possibility missing a slightly distorted signal, and requiring more time to respond.

Much effort went into designing circuitry that avoided the use of a microcontroller because it was thought that having a microcontroller would add cost and complexity, and make the circuit less reliable (for example, if the microcontroller malfunctioned due to a spike in voltage). In the end, however, use of a microcontroller actually simplified the circuit design, eliminated the number of circuit components, and provided very

desirable control features that would be difficult to obtain without the use of the digital logic and timing capabilities of a microcontroller.

The microcontroller serves three circuit functions. First, it provides the 7.5 Hz clock signal that is synchronized to the power line by performing a divide-by-8 function on the AC power line signal. This eliminated a 14-pin CMOS counter logic chip. Second, the microcontroller provides the final signal conditioning on the received load-shedding signal as described above. With the ability to accurately time the zero-crossings and apply logic, the resulting load-shedding signal is made very robust. Third, the microcontroller enables a smooth dimming transition by providing the drive for the optically coupled solid state MOSFET relays that dim the lamps. The microcontroller applies a rapid PWM switching scheme to the relay inputs for the visual effect of a smooth, ramping transition from full light output to dim level. Even though the microcontroller provides these three functions, the required processing power is very minimal due to the low frequencies involved, and because the PWM does not need to be done concurrently with the other functions. The resources of this particular 8-bit microcontroller are barely utilized, even though it is the smallest microcontroller the team could find in a convenient package. For simplicity in programming, and for using the built-in oscillator, the microcontroller operates at 4 MHz, but this speed could be reduced to 32 kHz or less while still maintaining effective performance because all the critical timing is derived from the 60 Hz line frequency.

5.2.10. Power supply

A low voltage power supply (Figure 14) is needed to power the active circuit elements and drive the SSRs. Because of the type of analog signal processing involved with synchronous detection, a split supply is used providing symmetric plus and minus 5 V with the neutral conductor serving as the ground reference (0 V). To keep costs low, the capacity of the supply was limited to about 6 mA. About 2 mA is used by the detection circuitry (including the PIC microprocessor) with the balance reserved for driving the SSRs. The most expensive component of the supply is the 0.33 mF capacitor (C10) because it must be rated for direct connection to the power line (X type). Increasing the current capacity of the supply has a dramatic impact on cost as the size of this capacitor increases. Precise regulation of the voltage is not important since the PIC microprocessor will operate over a supply range from 2.5 to 5.5 V, and the analog components operate over the range from about 5 V to 12 V.

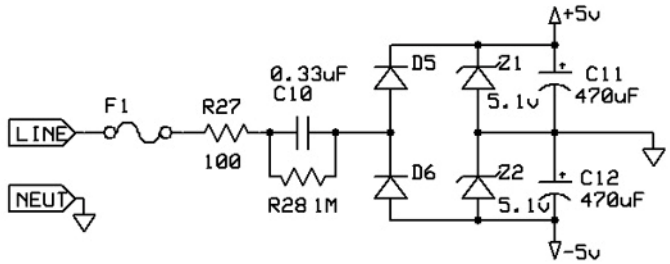

Figure 14. Power supply circuit for load-shedding receiver and dimming control circuits

5.2.11. Cost of receiver circuitry

Appendix D contains a complete bill of materials (BOM) with pricing information. The BOM is divided into three parts; the receiver, the power supply, and the dimming circuitry. When the technology is implemented inside a ballast case, a portion of the circuitry for the power supply and the dimming might already be present in the ballast, and therefore, the cost of implementation might be less. This is especially true for dimming, which can be accomplished in different ways.

The cost of components to build the receiver is $3.49 when purchased in quantities of 1000. These component prices were quoted from Digi-Key Corporation, a large distributor of electronic components, from their website. A significant component of this price is Digi-Key's mark-up for stocking, handling and profit. Based on conversations with people with experienced in building electronic devices, the prices quoted by electronic supply companies (in this case Digi-Key) are considerably higher, by a factor of two or more, than the price that a large-scale manufacturer would pay. As an estimate of these lower prices, Digi-Key's prices (quantities of 1000) were compared to known wholesale prices (quantities of one million) of a few commonly used devices to arrive at a "calibration" for estimating the cost of the other, less common devices. The calibration resulted in about a reduction by a factor of approximately two for large volume purchasing. Using the estimated large volume pricing, the cost of the receiver components is $1.48. The power supply cost is $1.33 for quantities of 1000, and estimated to be $0.46 for large volumes.

5.2.12. Alternate method (superheterodyne radio)

Radio circuits rely heavily on bandwidth narrowing techniques that are similar in function to the above circuit, and are capable of receiving very weak signals in the presence of noise and other interfering signals. Over many years a tremendous amount of development has gone into inexpensive radio circuits. This is illustrated by the fact that a complete AM/FM radio was purchased at a Wal-Mart retail store for approximately five dollars. Considering all the components that go into a radio, the basic receiver circuitry must be very inexpensive. Inspection of the radio revealed that the majority of the signal conditioning and filtering was accomplished by a single integrated circuit component. A load-shedding receiver circuit was designed around a single chip radio circuit, similar to the chip used in the Wal-Mart radio, to compare its performance and cost to the low frequency circuit discussed above.

The single chip radio circuit uses a Sanyo LA1600 AM radio chip. The chip implements a superheterodyne receiver. Other supporting components include a 450 kHz crystal ladder filter and a tunable LC oscillator. The transmitted signal was a 140 kHz carrier modulated with a 1 kHz tone. A National Semiconductor tone detector IC was used with the AM receiver to detect the 1 kHz tone.

The positive features of this circuit are that it has very good sensitivity and a relatively fast response time of less than one second. The disadvantages of the circuit are that it is more expensive than the synchronous detector when all the components are considered, and at least one of the magnetic components requires some tuning, or adjustment which would add expense to the manufacturing process.

The schematic for the radio-chip circuit is included in Appendix E. Figure 15 and Figure 16 are photographs of the complete add-on devices: the synchronous detection circuit and the radio-chip circuit.

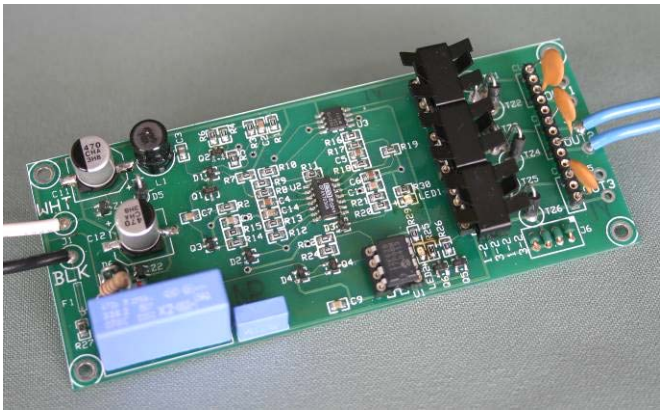

Figure 15. Complete load-shedding add-on device using the synchronous detection method

.

Figure 16. Complete load-shedding add-on device using the superheterodyne radio chip receiver.

6.0 Testing

6.1. Lamp Life when Dimming Instant-Start Operated Lamps

Two key requirements for a commercially successful load-shedding ballast are 1) energy efficiency that is at least as good as that of commonly used ballasts types, and 2) cost effectiveness. Dimming ballasts that are presently on the market do not meet either of these requirements in comparison to non-dimming instant-start ballasts which have over 90% market share for sales of electronic ballasts. Dimming ballasts cost two to three times as much as instant-start ballasts and require, on average, 9% more power to produce the same light output (LRC 2002). Therefore, an approach other than using existing dimming ballasts is needed for the development of a successful load-shedding ballast — one that can compete with the high efficiencies and low cost of instant-start systems.

Because of the special dimming requirements for load shedding, including relatively small amounts of dimming for a small percentage of operating time, the LRC identified instant-start systems as a promising platform on which to develop an efficient and cost effective load-shedding ballast. Conventional wisdom on fluorescent lamp systems was that lamp life would be dramatically reduced if lamps being operated on instant-start ballasts were operated at reduced current levels, i.e., dimmed. However, the amounts of lamp-life reduction for particular lamp current levels are not quantified in any literature the team could find on the topic. To the team's knowledge, lamp-life data for instant-start systems operated below 140 mA, the minimum possible current for low ballast-factor ballasts operated at the lowest specified input voltage, does not exist.

6.1.1. Previous literature on dimming instant-start operated lamps

Fluorescent lamps can certainly be dimmed to reduce power demand and many dimming electronic ballasts are available to do this. However, all dimming ballasts on the market are either rapid-start or programmed-start ballasts that provide supplemental electrode heating to the lamp electrodes. This supplemental heating is about 2 W per lamp resulting in about a 5 to 7% reduction in lamp efficacy compared to instant-start lamp operation. The remaining 2 to 4% reduction in efficacy measured for dimming ballasts is attributable to the extra circuitry of the dimming control interface. To the team's knowledge, no dimming ballasts exist that switch supplemental electrode heating on and off according to the lamp current level. If such a ballast did exist, it could conceivably come close to matching the efficacy of non-dimming instant-start systems under non-dimmed operation.

Very little specific information exists on dimming fluorescent lamps without supplemental electrode heating. While it is well known that operating a fluorescent lamp far below its rated current with an instant-start ballast (i.e., without supplemental cathode heating) can negatively affect its life, just how much of a reduction in operating current is tolerable is unclear (Lowry 1951; Hammer 1995; Waymouth 1971). Note, however, that T8 fluorescent lamps are routinely operated on instant-start ballasts over a range of operating currents, all of which are less than the rated 265 mA ANSI specification current. Reasons for this include the desire to operate lamps on low ballast-factor ballasts to save energy when smaller lumen packages are needed, and, with the

efficiency gains had by high frequency operation, lamps can be operated at lower currents while still providing the same light output.

A review of the literature on dimming fluorescent lamps was written by the LRC for a previous project on load-shedding ballasts, *Energy saving load-shedding ballast for fluorescent systems: Task 2, Investigation of the effects of dimming on lamp life.* (LRC 2003d)

6.1.2. Overview of fluorescent lamp operation

To fully appreciate the issues and interconnections between lamp-life, ballast type, dimming, and efficacy, a basic understanding of the operation of the fluorescent lamp is necessary. A fluorescent lamp operates with a low-pressure electrical discharge occurring between two electrodes within the glass envelope of the lamp. The lamp is filled with a mixture of noble gases (mainly argon) and mercury at pressures ranging from 100 to 400 Pa (Rea 2000). The partial pressure of mercury is determined by the natural vapor pressure of the excess liquid mercury within the lamp. Some lamp types mix the mercury with other metals to form an alloy, or amalgam, which can greatly affect the vapor pressure of mercury. The vapor pressure is highly temperature dependent, and mercury will condense at the coldest location within the glass envelope of the lamp. Therefore, the physical dimensions and shape of the lamp, as well as the ambient temperature, determine the mercury pressure during operation. The mercury pressure, in turn, governs the voltage and power of the discharge, and consequently the light output. Once a lamp warms up to its operating temperature, most of the power delivered to the lamp goes to ionizing and exciting mercury atoms which then emit their characteristic spectrum, which is dominated by the UV spectral line at 254 nm. Phosphors that coat the inside of the discharge envelope convert this UV radiation to visible light.

Certain electrical conditions must be met in order to maintain a stable mercury discharge within the lamp. These conditions are maintained by the both the lamp electrodes and the ballast. A ballast performs three functions: starting the lamps, that is, initiating the electrical discharge, providing the proper voltage and power levels to operate the lamp, and regulating the lamp power for stable operation. The lamp electrodes provide the interface between the flow of electrons in the metal wires and their injection into the gaseous plasma within the lamp that constitutes the mercury discharge.

The electrode interface is potentially a place of great inefficiency for the fluorescent lamp. For lamps that use bare metal electrodes, known as cold cathode lamps, a significant amount of the lamp power is dissipated at the lamp electrodes where high voltages are required to pull electrons off the electrodes. The resulting inefficiency of cold cathode lamps limits their use to low-wattage/low-output lamps, typically used for signage. By coating the electrodes with compounds that readily give off electrons, especially when heated, the efficiency of lamps is substantially increased, as well as their power handling capacity. This enables higher lamp wattage designs than with cold cathodes. Lamps with electron-emissive coatings are known as hot cathode lamps because the electrodes need to operate at temperatures around 700°C (Waymouth 1971) for long life and proper functioning of the electron-emissive coatings.

General purpose fluorescent lamps used in lighting, such as T8, T12, and compact fluorescent lamps, all use hot cathodes. These lamps rely on the special emissive coating on their electrodes for proper operation. During operation, and especially during lamp starting for certain starting methods, this emissive coating is gradually removed from the electrode filament either by evaporation, or sputtering. Sputtering is the removal of material at the atomic level due to the impact of charged ions. The result of sputtering and evaporation is degradation of the emissive coating on the filament and lamp-end blackening from the material being re-deposited on the lamp envelope in the vicinity of the electrodes. Typical end-of-life failure for fluorescent lamps occurs when the emissive coating is fully depleted.

Ballast design is extremely important for ensuring a long electrode life, and consequently a long lamp life. The main distinction among the different electronic ballast types (e.g., instant-start, rapid-start, and programmed-start) is the lamp starting method. Starting is potentially very detrimental to lamp electrodes. The electrodes must be kept at an operating temperature in excess of 700°C for the emissive coating to function as a low-energy electron emitter, otherwise high voltages across the electrode-plasma interface cause significant sputtering damage. Two approaches are used to minimize electrode damage when starting lamps; preheat the filament with an auxiliary electrical circuitry, or apply a high starting voltage (> 600 VAC) so the electrodes heat-up quickly with minimal sputtering time.

Pre-heat, rapid-start, and programmed-start all attempt to heat the lamp electrodes before initiating the electrical discharge. Programmed-start is the modern electronic version of pre-heat where heating current is applied to the electrodes before lamp voltage is applied across the lamp. With rapid-start, the electrode heating current and the lamp voltage are applied together—not necessarily because it offers better performance, but because it is an inexpensive design for magnetic ballasts. Different variants of these starting methods exist with the aim of optimizing lamp life, efficient operation, and low cost.

Instant-start ballasts provide no auxiliary circuit for heating the lamp electrodes. Instead, a voltage exceeding 600 V is applied across the lamp which is sufficient to initiate a discharge and overcome any cold cathode inefficiencies. However, due to the high inefficiencies of a cold electrode, the electrodes, or at least a small spot on each electrode, heat-up quickly and convert to hot cathode operation within a few milliseconds.

During lamp operation, the electrodes are heated by the lamp current passing through them, and by the energy dissipated by extracting and collecting electrons from the plasma. For rapid-start ballasts, additional heating is provided by the auxiliary electrode heating circuitry. This additional heating increases the electron emissions of the electrodes, thereby lowering some of the electrode/plasma interface losses. However, this slight gain in electrode efficiency is outweighed by the power required to heat the electrode, so the net system efficacy is lower for rapid-start than for ballast types that switch off cathode heating during operation, or like instant-start, that do not have any supplemental electrode heating. Table 6 compares system efficacies.

Table 6. Comparison of fluorescent lamp ballast technologies*

Ballast type	System efficacy		Comments
	T8 lamps LPW	"Super T8" lamps LPW	
Instant-start	76	91	Inexpensive
Rapid-start	72	86	The standard for magnetic ballasts (electronic versions of rapid start are becoming obsolete)
Programmed-start	75	90	Longer lamp life (especially for frequent starting)
Dimming	68	82	Able to dim, expensive

*Data compiled from NLPIP Specifier Reports: Electronic Ballasts (2000) and Dimming Electronic Ballasts (1999) and manufacturers' data sheets

Since the electrode temperature during lamp operation is mainly provided by the self-heating effects of lamp current, the magnitude of lamp current is critical for proper lamp operation and long electrode life, unless supplemental electrode heating is provided. For this reason, all the dimming ballasts on the market provide supplemental electrode heating. The amount of supplemental electrode heating for different lamp currents is not well known and is the subject of on-going investigations. For example, the LRC is currently involved with a study investigating the optimal amounts of supplemental electrode heating for dimming linear T8 lamps. With funding by the DOE and support from NEMA, the study aims to provide information for developing a standard that specifies electrode heating requirements for dimming.

In the investigations on lamp life and electrode heating, measurements of cathode fall voltage are thought to be of key importance for understanding the operational state of the electrode. Cathode fall voltage is the voltage measured across the interface between the lamp electrode (when it is operating as a cathode) and the plasma. Cathode fall is directly related to the efficiency of electrode operation and is an indicator of conditions that cause evaporation and sputtering of the electrode. Investigative work on measuring cathode fall was done by graduate student Xiaomei Lou. Her master's thesis, *Cathode fall voltage and lamp life for instant-start fluorescent systems operated at low current levels*, provides more detailed background information on fluorescent lamp operation as well as measurement techniques for cathode fall voltage (Lou 2003). The results of her thesis help with understanding the physics of low current lamp operation.

6.2. Previous Instant-Start Dimming Work

Previous to this work, the LRC had started a small life test on instant-start systems operating at low current levels. This work was funded by the DOE as part of a project

entitled "Reducing Barriers to the Use of Efficient Lighting Technologies" (LRC, 2003a). The life test had accumulated approximately 4000 hours of operation when this project started, and the results were looking very encouraging for using instant-start ballasts for load-shedding applications.

The experiment used standard design T8 fluorescent lamps and single-lamp electronic ballasts from one manufacturer. The lamps were modified by the manufacturer on the assembly line by wiping away the phosphor coating on the inside of the lamps-ends to enable viewing of the electrodes. Lamps were dimmed by installing a capacitor in series between the lamp and the ballast. The addition of a series capacitor reduces the magnitude of the lamp current; the smaller capacitance, the lower the lamp current. Ten systems, each consisting of a lamp, a ballast and a capacitor for dimming, were tested at the following lamp current levels: 20, 24, 30, 41, 64, 120, and 180 mA. The 180 mA level is the undimmed, full current level without a capacitor in the circuit which corresponds to a 0.88 ballast factor.

Figure 17 shows the results of this first life test as of August 2004 after nearly 18,000 hours of operation. Median lamp lives for each lamp current condition are plotted as a function of an experimental metric. The metric, based on the magnitude of cathode fall voltage during operation, is being studied as a method for predicting the lamp life. The metric shows a high correlation with the logarithm of median lamp life. A departure in the straight line curve fit is expected for lamp currents approaching 180 mA, however, as other life determining effects come into play (e.g., electrode evaporation and mercury loss). For the 120 mA condition, lamp life may approach or even exceed the expected lamp life at full light output conditions. Possible reasons for this are that the maximum lamp life for this lamp type/manufacturer might be for an operating current less than 180 mA, or that a threshold lamp current exists for which life is unaffected as lamp current is reduced until the threshold current level is reached.

A more extensive life test was needed, however, to substantiate these initial finding and to provide answers to the following questions:

- Are the results reproducible?
- Are the results applicable to other lamp types (i.e., manufacturers)?
- What is the effect of cycling power levels?

The original life test continues to accumulate hours for the 120 and 180 mA current levels, and it is expected that the lamps will last another year or more.

The relationship between lamp life and cathode fall that this first study began to explore is also worth pursuing because it provides some understanding of why low current operation is detrimental to lamp life. Such an understanding helps define suitable operational parameters for dimming specifications and helps set meaningful limits.

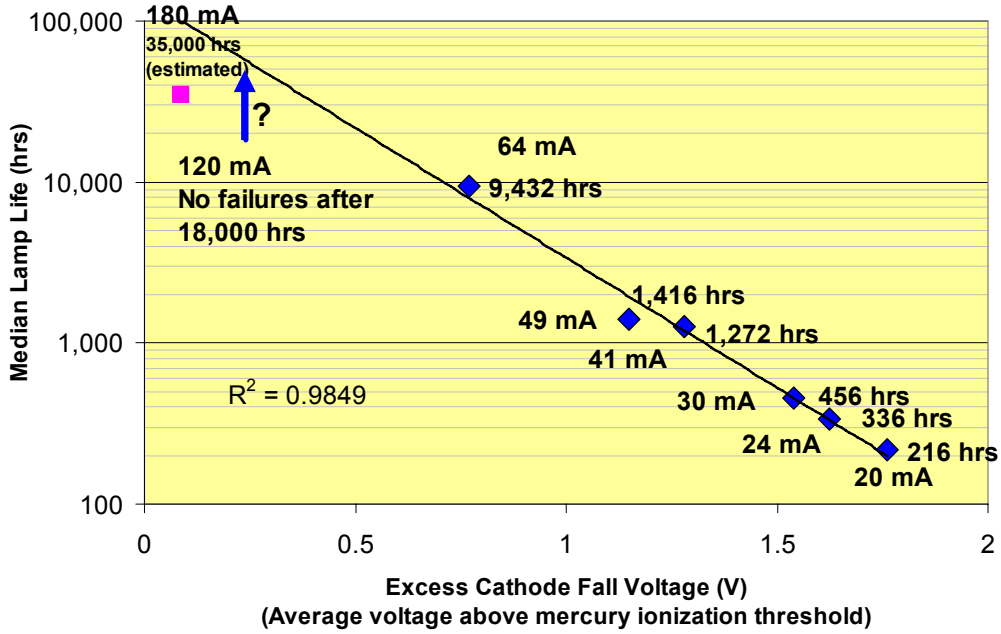

Figure 17. DOE-funded instant-start life test started prior to this project

No lamp failures for the 120 mA condition after 18,000 hours of operation implies that life might approach or exceed life at nominal lamp current (180 mA). Lamp life for continuous operation at nominal full-output is estimated to be 35,000 hours.

6.3. Design of Life Test

Two sets of life tests were designed and started. One tested whether lamps of different designs, as made by different manufacturers, have similar lifetimes when operated at low lamp currents without supplemental electrode heating. This test also helped establish the reproducibility of the previous results. A second set-up explored the effect of cycling the lamps between states of full light output and dimmed conditions as would occur in actual load-shedding applications.

6.3.1. Lamp life at different dim levels (lamp currents) for different lamp designs

Lamps from three different manufacturers, OSRAM Sylvania, GE Lighting and Philips, are included in a life test to determine life at substantially reduced operating currents. The experimental methodology is similar to that used in the previous DOE instant-start life test. Lamps are operated on single-lamp electronic instant-start ballasts with an appropriately sized capacitor in series with the lamp to obtain the desired operating current. The same brand and model ballasts are used for all the current levels and lamp types. Three current levels were planned for each lamp type, 30, 40 and 50 mA, but due to limited rack space and other constraints, only the 50 mA current level was realized for one of the manufacturers (Brand-C lamps). Each condition has ten lamps.

Since the same manufacturer as was used in the previous DOE life test is also used in this test, the reproducibility of the dimming results can be evaluated, although a direct comparison cannot be made because a different lamp model was used. Low mercury,

ECO designated lamps were used in the present life test while standard T8 lamps were used previously. Low mercury lamps are expected to be the dominant type of lamp on the market in the near future.

6.3.1.1. Use of extremely low lamp current levels

As evidenced by the DOE life test, lamps operating at current levels above 64 mA likely have median lives in excess of 10,000 hours (1.1 years). Considering the time schedule of this project, the experiment was designed to produce useful and timely information. Reasons for testing at lamp currents that are substantially lower than required for load shedding are listed below.

- There was a need to gather data quickly within the two-year project period.
- There was a need to compare lamp types, and the most complete data readily available is for the lower current levels.
- The purpose of the life tests are to show that lamp life is within acceptable limits when lamps are dimmed for short periods of time. If lamp life is shown to be acceptable for these extremely low lamp currents, then it can be concluded that life is acceptable for higher lamp currents as well. What lamp life actually turns out to be for more realistic load shedding conditions is not essential.

6.3.1.2. Continuous operation at low current levels

This present life test deviates from actual lamp operation in two ways. In practice, lamps are switched on and off a few times per day, and this is known to shorten lamp life, especially for instant-start lamp operation. On/off switching was not included in this life test because the team didn't want to add the variability of another experimental variable, and wanted to be able to compare the results to the previous DOE life test. Since the load-shedding ballast specification calls for lamps to always be started at full power conditions, the team does not expect an interaction between life degradation due to starting and load-shedding operation. Therefore, the team is assuming that the starting degradation to lamps is independent of operating current and would reduce life by some amount depending on the number of starts per day regardless of load shedding.

The difference between continuous dim lamp operation and load shedding, which occurs infrequently, is addressed in a separate life test described below.

6.3.1.3. Results and analysis for different lamp brands

Figure 18 plots the failure times for the continuously operated dim life test for different brands of lamps. As of August 15, 2004, every lamp condition has had over half of the lamps fail, so median lifetimes can be calculated. Table 7 shows the median lifetimes for each condition.

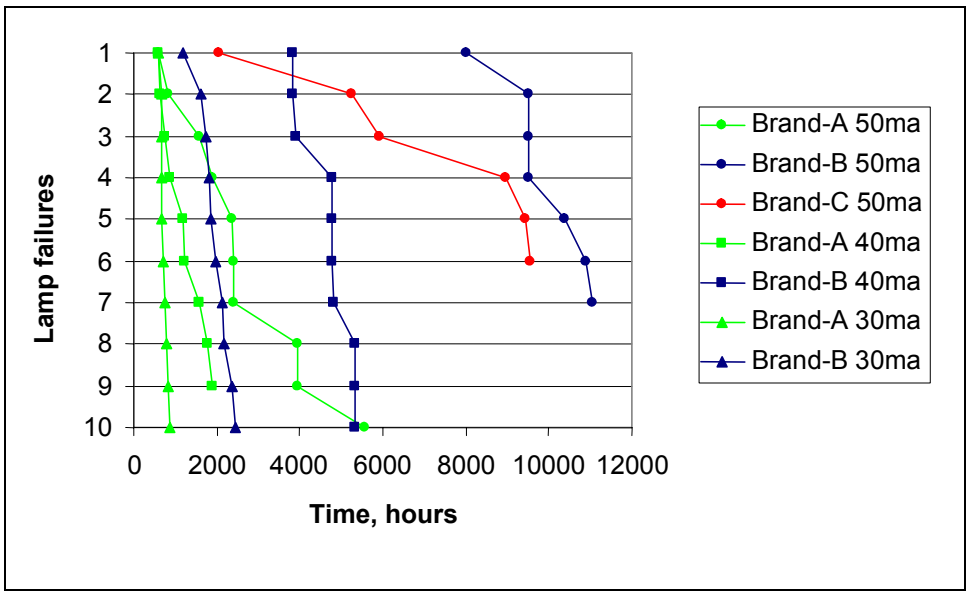

Figure 18. Lamp failures for continuous operation at low currents for different lamp manufacturers

Table 7. Median lamp life for continuous operation at very low lamp currents

Lamp type and operating current	Median life (hours)
Brand-A 30 mA	693
Brand-B 30 mA	1920
Brand-A 40 mA	1200
Brand-B 40 mA	4778
Brand-A 50 mA	2390
Brand-B 50 mA	9962
Brand-C 50 mA	9206

The data clearly show that different brands of lamps have very different lifetimes when they are operated at these very low currents. For example, Brand-B and Brand-C median lamp lives at a current of 50 mA are roughly four times that of Brand-A at the same current level. These results indicate significant differences in lamp design among the different brands of lamps. It is hypothesized that these differences mainly concern the electrode design of the lamps. Some of the electrode design differences are clearly visible, such as stick filaments (Brand-A) compared to triple-coiled filaments (Brand-B), and the addition of metal shrouds around the filaments (Brand-C). However, other differences in the chemical composition of the electrode coating are probably more significant to electrode performance at these low current levels.

While such differences make it impossible to generalize what the effect of operation at very low lamps currents is for all lamps, these results demonstrate the range of effects for the majority of the lamps on the U.S. market. By using the Brand-A lamp data for estimating the effect of load shedding on lamp life, one could be confident that the effect would be at least equal, if not much less, for the other two lamp types.

6.3.1.4. Lamp life versus lamp current

Comparing these latest lamp life results to the previous DOE lamp life test shows excellent reproducibility for the Brand-A lamps. Figure 19 plots the data of the two experiments showing lamp life versus operating current. Not only do the data points for the Brand-A lamps at similar operating currents nearly fall on top of one another, the steep rise in slope for lamp currents greater than 50 mA exhibited in the DOE data parallels that for the Brand-B and, presumably, the Brand-C data, which show a rapid increase in lamp life as current is increased, but which is shifted to lower lamp currents than the Brand-A data.

Also shown on the graph is the current 18,000-hour mark for the DOE life test for Brand-A lamps operated at 120 mA for which there are currently no lamp failures. The significance of 120 mA is that this is the current corresponding to a 33% reduction in lamp power for a normal ballast factor ballast. The fact that the median lamp life will be much greater than 18,000 hours is consistent with extrapolation of the life verses lamp current curve, even if one assumes a sigmoid shaped curve fit.

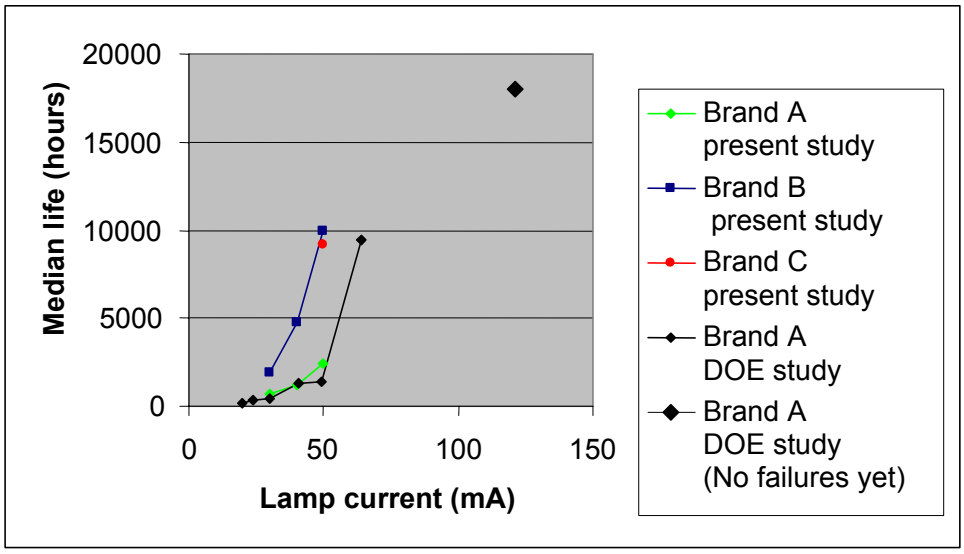

Figure 19. Lamp life versus continuous operating lamp current

6.3.2. Cycling between dim and full power

A life test was explicitly designed to investigate the difference in lamp life between continuous dim operation and cycling between dimmed operation and full power as this would occur in practice with a load-shedding ballast. Since this method of operation more closely follows how lamps will be operated in practice, this cycling life test included conditions of lamp current that are within the range of actual load-shed

dimming, even though it was expected that most of the lamps would not fail within the duration of this project.

6.3.2.1. Cycling hypothesis

The specific hypothesis for the cycle test is whether lamp life reduction for low current operation is proportional to the amount of time the lamp is operated at the low current level. Stated mathematically, the correctness of the following equation for lamp life is under question.

Electrode life model

$$1 \text{ (electrode)} = t_1 * \alpha + t_2 * \beta$$

$$\text{Life} = t_1 + t_2$$

Where t_1 = time in condition 1
t_2 = time in condition 2
α = condition 1 degradation rate (loss/hour)
β = condition 2 degradation rate (loss/hour)

Knowledge about the cumulative damage to lamps resulting from low current operation is important for estimating the effect on lamp life of different amounts of load shedding time per year. Currently, the specification calls for a maximum of 200 hours of load shedding per year, a number based on what is needed to gather the majority of economic benefit of load-shedding and not based on lamp life data. Results that show little effect on lamp life will likely relax this time-of-use requirement for load shedding and possibly open opportunities for additional cost saving activities not included in the present economic analysis of the load-shedding ballast.

6.3.2.2. Cycling method

The experimental method for the cycling test is similar to that for the continuous operation life test. Brand-A lamps were operated on single-lamp ballasts and capacitors were used in series with the lamp to achieve the appropriate low current dim conditions. An electromechanical relay was used with each lamp to short the capacitor, thereby allowing automatic control of dim and full power operation for each individual lamp. The high voltage across the dimming capacitors and the relatively high current levels at which the lamps operated (~180 mA) required special relays for reliable operation. Relays were tested prior to the start of the life test on similar lamp/ballast equipment under rapid cycling to make sure they could perform the required number of switches over the life test period.

Lamps were tested at the following dim levels: 40, 50, 60, 90, and 120 mA. Two cycles were tested: 4 hours dim/4 hours full, and 4 hours dim/8 hours full. Figure 20 shows schematically the timing of the different cycles. The continuously dim cycle uses the data from the first experiment described above. The four-hour dim period is typical for a load-shedding situation. The full-power periods were chosen so that if the proportionality hypothesis is correct, the median lifetimes for the cycled lamps should be nearly twice and three times as long as the continuously dim operated lamps.

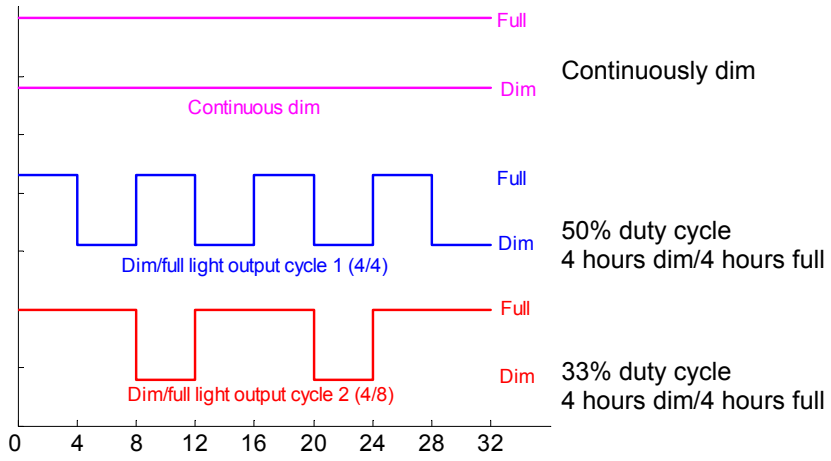

Figure 20. Schematic showing the timing of the cycling experiment

6.3.2.3. Cycling results

Figure 21 plots the failure times for the lamps in the cycle test. The 60, 90, and 120 mA conditions are not shown because there are **no failures** as of the time of this report. As of August 20, 2004, the lamps in the life test have been operated over 10,000 hours.

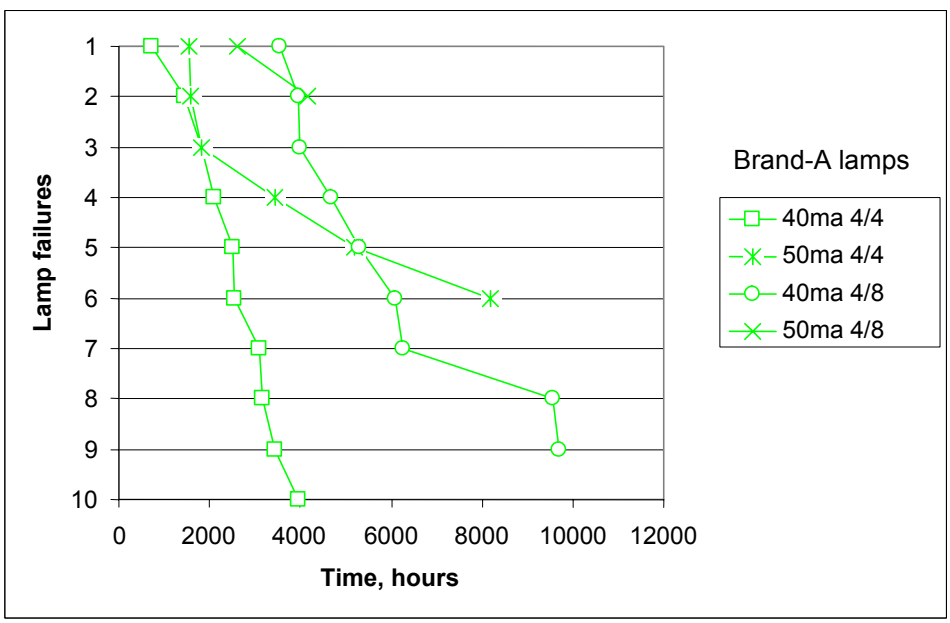

Figure 21. Lamp failures for lamps operated on full/dim cycles

6.3.3. Cycling data analysis

For a lamp with life L, the degradation rate can be expressed as 1/L. For example, if life is given in hours, then the degradation rate is the fraction of life lost each hour. For the cycling life test there are, according to the hypothesis, two degradation rates, R1 and R2, and these degradation rates are assumed to be independent of each other. For a lamp that is operated a portion of its life at one degradation rate, and the remainder of its life at another degradation rate, an average degradation rate can be calculated and the

reciprocal of the average degradation rate is the life of the lamp. Knowing the cycle times, the average degradation rate is calculated according to:

$$Ravg = R1*(t1/(t1+t2)) + R2*(t2/(t1+t2))$$

And the life of the lamp is given by:

$$L = 1/Ravg$$

For the cycling test, t1 and t2 are both 4 hours for the 4/4 cycle, and for the 4/8 cycle, t1 is 4 hours and t2 is 8 hours. R1 is the reciprocal of the median life for the corresponding low current continuous operation condition (from Table 7) and R2 is the reciprocal of the rated median life for full-power operation. While the rated life of instant-start lamps is not precisely known, the team estimates it to be 30,000 hours. This estimate is based on the following. For continuous operation on instant-start ballasts, life is significantly longer than the rated life for the three hours per start standard life test. At three hours per start, the rated life for instant-start systems is 15,000 to 20,000 hours. For programmed-start systems, the rated life is 30,000 to 40,000 hours, but programmed-start may also provide some supplemental cathode heating during operation that would probably extend life. The LRC has an ongoing instant-start life test that has accumulated approximately 28,000 hours of continuous operation without any failures. Even if the 30,000 hour estimate is off by several thousand hours, the effect on the analysis is slight since life is dominated by the much higher degradation rates of the low current conditions for which the team has actual data. For example, a continuous-operation life of 40,000 hours only changes the predicted life on the 4/8 cycle by 3.5%.

Figure 22 shows the median lifetimes for the two lowest current levels for the different cycling periods as well as median lifetimes as predicted by the proportionality hypothesis shown above. Data for continuous operation is from the previously described life test using the same lamp type and brand.

Figure 22 clearly shows that the proportionality hypothesis is not supported. Instead of two to three times the life as predicted, the lifetimes of the cycled lamps were three to five times as long. From these results, the team finds that dimming instant-start operated lamps for short periods of time is not nearly as damaging as first thought. It appears that either the lamp electrodes are less affected by short dimming periods than long dimming periods, and/or when operating at full power, the electrodes “heal” to some extent and recover some of their electron emissive function.

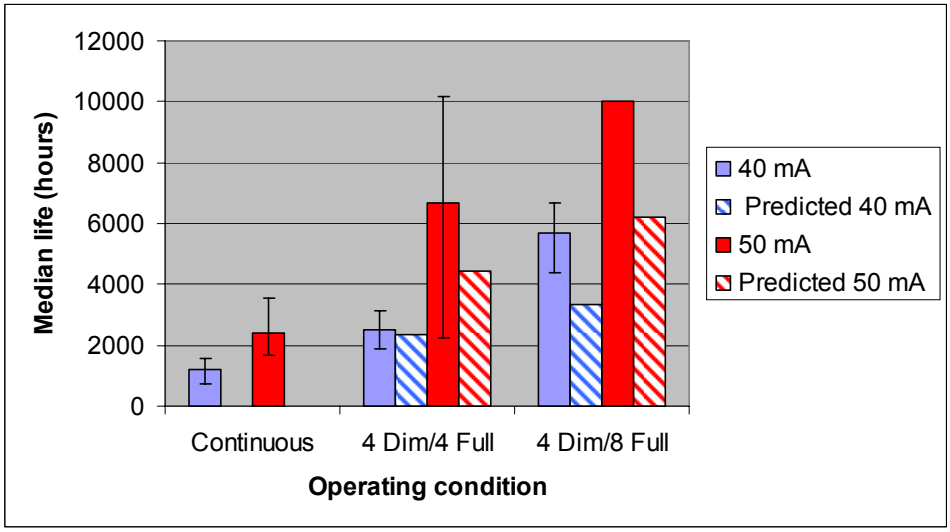

Figure 22. Median lamp life for different lamp currents and full/dim cycling periods

Error bars show first and third quartiles in cases where enough lamps failed to calculate values. With only two lamp failures out of ten lamps for the 50 mA, 4/8 cycle condition, the 10,000 hour life shows the current operating hours and not the actual median life. The large error bar shown for the 50 mA, 4/4 cycle condition results from a number of lamp failures occurring much earlier than the median life as is seen in Figure 21. The 4/8 cycle appears to be starting a similar trend with the first two failures occurring at about the same time as the first failures for the corresponding 40 mA condition. This high variability is consistent with the 50 mA current level being at the "knee" of the curve where lamp life dramatically increases with increasing lamp current.

6.3.4. Calculated lamp life for various load-shedding scenarios

Without any lamp failures at the 120 mA condition (either continuous or cycled), the project team is unable to make precise estimates about lamp life for load-shedding practices as described in the load-shedding specification. Nevertheless, using the data available, the team can make estimates based on the conditions for which data exist. When compared to how load shedding will likely be practiced, these estimates are extremely conservative. Table 8 shows two such estimates.

The first set of estimates uses data from the 50mA condition of the 4/8 cycle. This is a gross underestimation of life for load-shedding applications because 50 mA is just at the knee of the rapid increase in life for the higher lamp currents associated with load shedding. The estimate also uses an average degradation rate that is weighted according to the time spent in each condition. For example, for 100 hours of dimming per year, the time spent in the 4/8 cycle is 300 hours and for the balance of the time, (2700 hours) the lamp is operating at full power. Therefore, to calculate the average degradation rate, the 4/8 cycle is weighted by 300 and the life at full power is weighted by 2700. As was shown by the cycling life test results, the average degradation rate as calculated above underestimates the actual life when lamps are cycled.

The second set of estimates assumes that the median life for the 120 mA condition is equal to the number of hours tested so far in the continuously operated DOE life test.

Not only is this an underestimation of the actual median lamp life, since no lamps have yet failed under this condition, but it is for continuous operation at the dimmed level. This set of estimates is also calculated using an average degradation rate weighted by the time spent under each condition.

Table 8. Calculations of lamp life for different load-shedding times and dim levels assuming a 20,000 hour lamp life for full light output operation

	Dim to 50 mA		Dim to 120 mA	
Hours load-shed/year	Life (hours)	% Reduction	Life (hours)	% Reduction
100	18,182	-9	19,926	-0.4
200	16,667	-17	19,853	-0.7
300	15,385	-23	19,780	-1.1
500	13,333	-33	19,636	-1.8
1000	10,000	-50	19,286	-3.6

It is important to point out that the effect of switching the lamps on and off was not included in these life tests, yet Table 8 uses a rated lamp life of 20,000 to include the effect of on/off switching on overall lamp life. On/off cycling is responsible for the shorter rated life of instant-start systems, bringing life down to half of what it is under continuous operation (e.g., from 40,000 hours to 20,000 hours). However, since it is required in the proposed specification that load-shedding ballasts always start lamps at full power, it is expected that the damage due to starting will be the same regardless of whether the lamp has ever been dimmed. Even if there is an interaction between switching and dimming, which might be revealed at very low dimming levels, at higher dim levels the effect would likely vanish because the damage to the electrodes during operation must be minimal to account for the observed long lamp lifetimes. This is supported by a study on lamp life using traditional dimming ballasts that shows no interaction between switching and dimming (Tetri 2000).

6.4. Conclusions

- The results of the continuously dim life test corroborate the results of the previous DOE life test. This is important because the results of the DOE life test were used to guide the development of the load-shedding ballast specification. Nothing in the specification needs to change, but it appears quite possible to extend the permitted hours of load shedding per year and/or increase the power reduction beyond 33% with little effect on lamp life.
- Lamp life is different for the three major U.S. lamp manufacturers' T8, low-mercury lamps for low current operation. However, lamp lives for the two manufacturers' lamps not tested in the previous DOE life test were substantially longer than those of the other manufacturer. Therefore, while life predictions at low current levels do not generalize across lamp types, the impact on lamp life

for the additional two brands of lamps is no worse than for the brand first studied.

- For all the lamp brands tested, lamp life appears to increase dramatically for increases in lamp current above a threshold ranging from 30 to 50 mA. This is consistent with the lack of lamp failures for operating currents closer to the range of those required for load shedding. There is no evidence at this time that lamp life for lamps operated at 120 mA will be any less than for lamps operated at a full-power condition of 180 mA.
- Cycling between full-power operation and dimmed operation results in lamp lifetimes that are substantially longer that would be predicted by assuming constant degradation rates for full-power and dimmed conditions. Since load shedding occurs for relatively brief, infrequent periods, it appears that the effect on lamp life is much less than previously assumed by using time-weighted average degradation rates.
- With no failures for lamps operated at 60 mA and above, is it impossible to make accurate estimates of what the reduction in lamp life will be for the proposed load shedding scenario (approximately 120 mA operation for 200 hours per year). Instead, estimates were made using the available data. At a dimmed lamp current of 50 mA (less than half of the proposed level), estimates of lamp life reduction range from 9 to 50% for load shedding periods ranging from 100 to 1000 hours per year. For dim levels closer to those actually required for load shedding, ranging from 90 to 120 mA, lamp life is expected to be much, much less affected. Evidence of this is provided by the DOE life test which has logged over 18,000 hours without any failures for lamps operated *continuously* at 120 mA.

6.5. Power Line Carrier Receiver Testing

6.5.1. Signal strength and noise rejection testing (preliminary testing)

Early in the project it was known that a successful power line carrier signaling method must overcome considerable amounts of noise and signal attenuation present on the power lines. When the first synchronous detection circuit was developed, testing was performed within the LRC to determine how well the signal propagated and how well it could be detected. The following graphs show measurements of signal strength and noise present on the LRC power lines at three example locations. The top graph of each pair is the time-domain representation of the measurement, or in other words, a waveform graph showing what the oscilloscope recorded over a 0.6 ms period. The bottom graph of each pair is the frequency-domain representation of the signal and noise having performed a Fourier transform on the digitally recorded waveform data. The frequency-domain graphs show the signal/noise strength (magnitude in V) as a function of frequency.

The first pair of graphs, Figure 23, show the signal measured at the test bench where the transmitter and the receiver shared the same receptacle. Notice that the peak voltage of the waveform is approximately 1.5 V which corresponds to an rms value of approximately 1.1 V and this is shown in the frequency-domain bar graph with a bar at 46 kHz with a magnitude of approximately 1.1 V rms.

The second and third pairs of graphs, Figures 24 and 25 respectively, show measurements where the receiver is located farther away from the transmitter. In Figure 24, the signal amplitude has fallen below the amplitude of an interfering noise signal at approximately 30 kHz. The strength of the load-shedding signal here is approximately 10 mV. Figure 25 shows an even worse condition where the load-shedding signal strength is only about 3 mV and the interfering signal at 30 kHz is 66 mV, over 20 times as great. Noise at other frequencies is of equal or greater amplitude than the load-shedding signal. Nevertheless, under all these conditions, the synchronous detection receiver was able to receive and respond to the load-shedding signal. These measurements demonstrated that an inexpensive circuit could be quite effective at overcoming noise interference and signal attenuation present on the power lines.

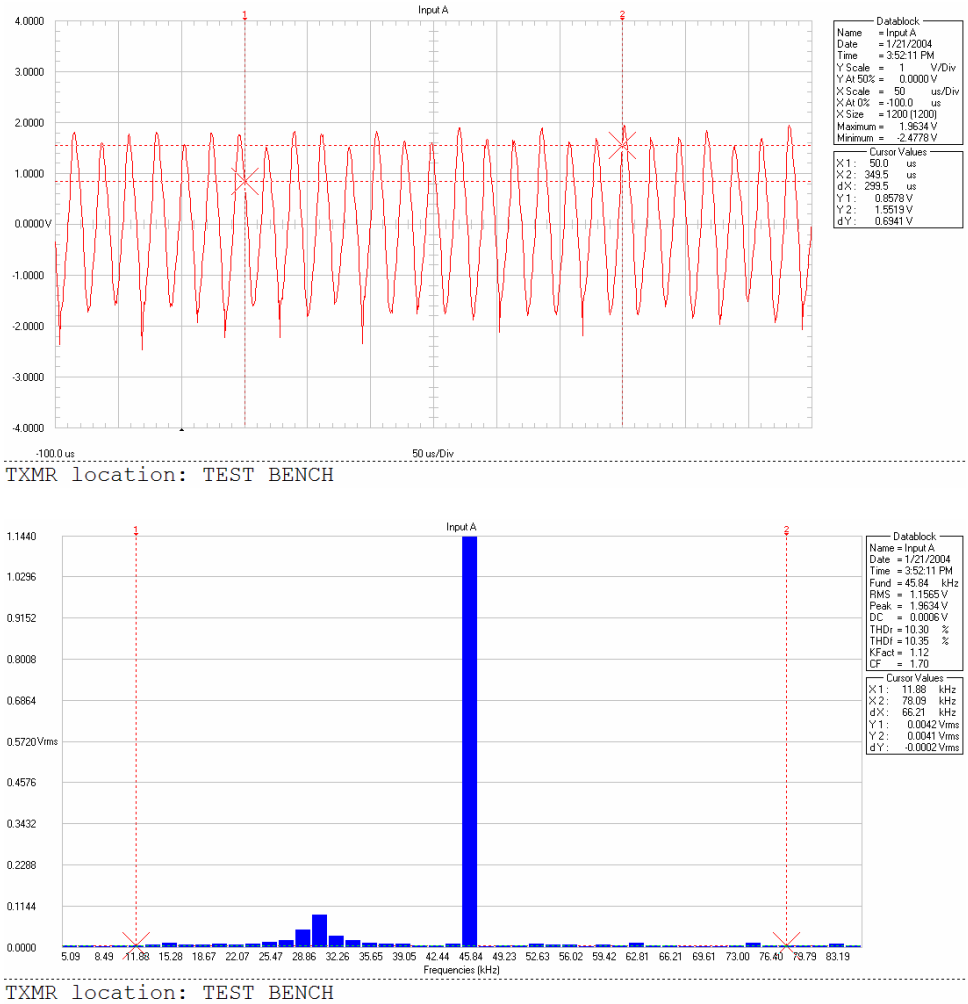

Figure 23. Power line carrier signal measured at test bench

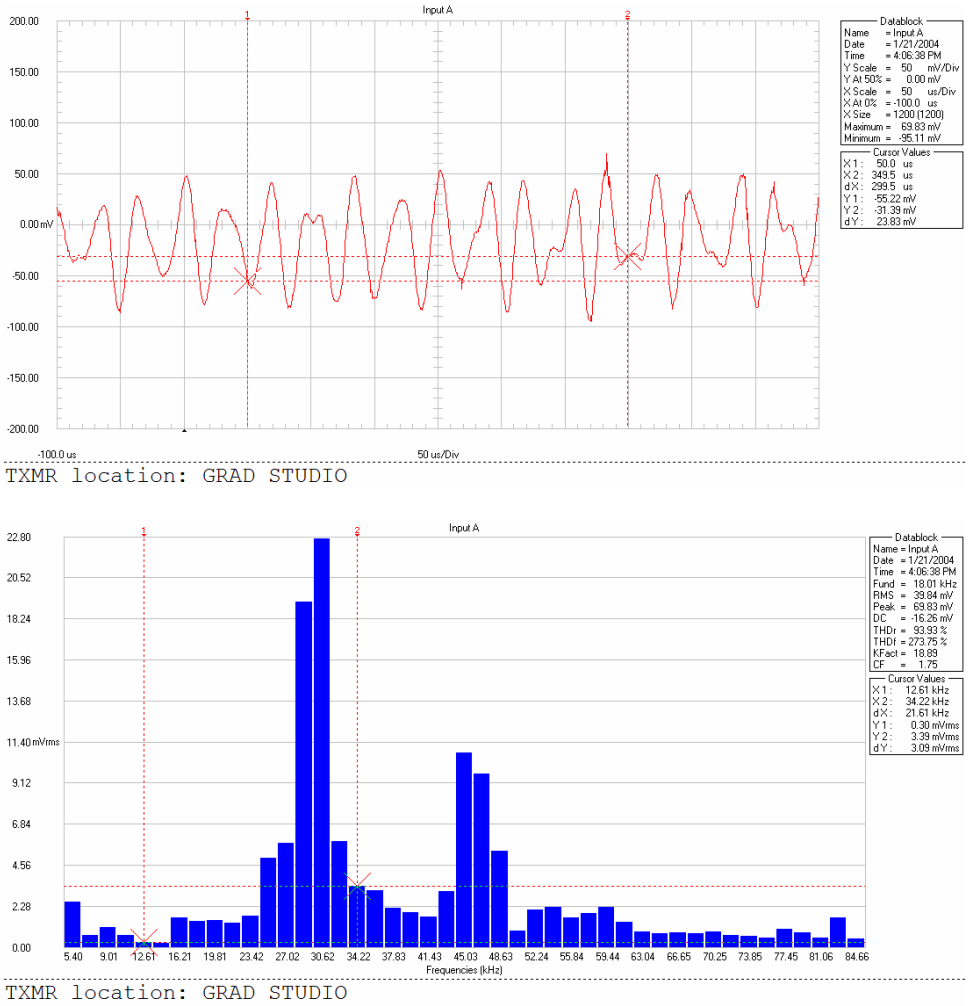

Figure 24. Power line carrier signal measured at remote location (grad studio)

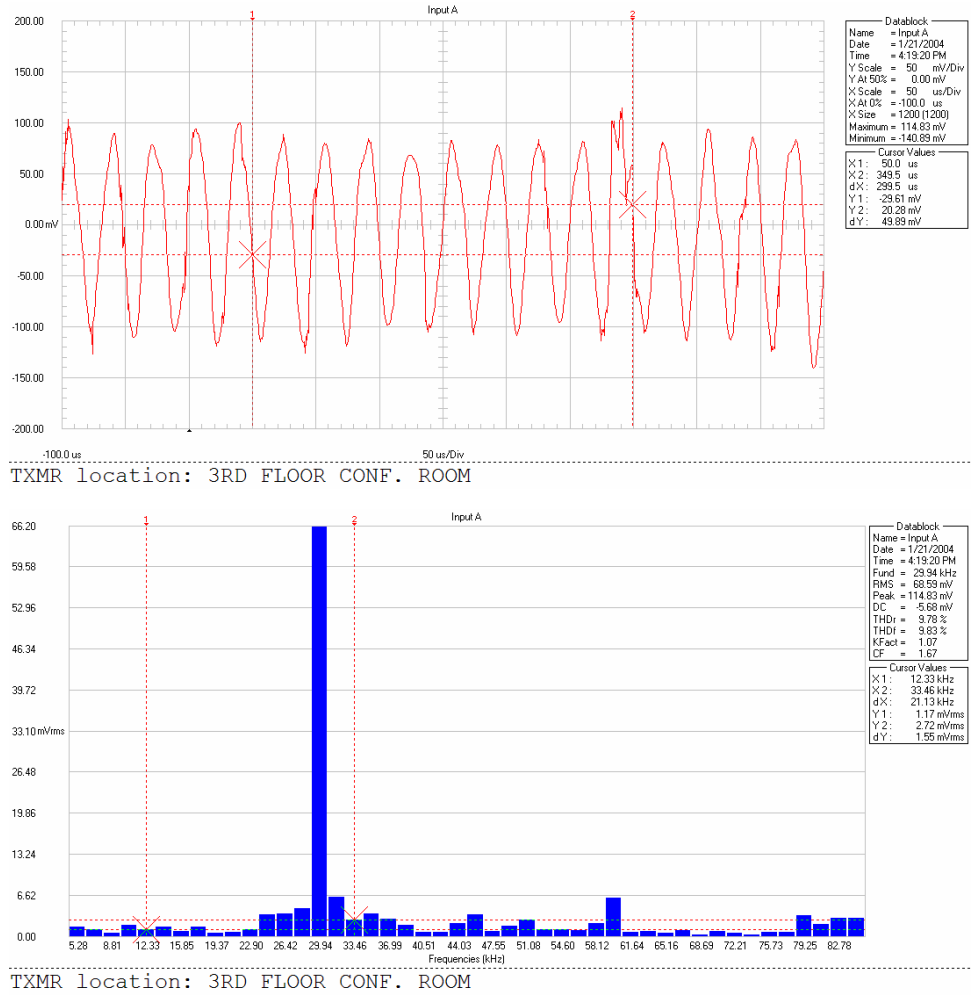

Figure 25. Power line carrier signal measured at remote location (3rd floor conference room)

6.5.2. Elevated temperature resting (final design)

The load-shedding receiver was tested for functionality at elevated ambient temperatures. When incorporated into a ballast case, the ambient operating temperature will likely be significantly higher than room temperature. While the components used in the prototype add-on device were specified as commercial temperature range (0° to 70°C), industrial rated components (-40° to 85°C) could be specified if internal ballast case temperatures warrant. Nevertheless, even though temperatures may be within the specified operating range of the components, changes in the characteristics of components due to temperature, such as changes in capacitance and semiconductor leakage currents, can affect circuit behavior.

6.5.2.1. Procedure

The load-shedding receiver circuitry was placed in a temperature controlled oven with wires running out through a small opening in the oven to connect the receiver to the power lines and to measure the status of the MOSFET switches used to dim the

fluorescent lamps. The resistance across the MOSFET switches indicates the status of the device. A digital multimeter was used to measure the resistance.

- Load shedding off: When no load-shedding signal is present, the resistance across the MOSFET switches is approximately 6Ω (ohms).
- Load shedding on: When the device has detected the load-shedding signal (load-shed mode), the output terminals are effectively an open circuit ($R > 10^8$ Ω).

The temperature of the oven was manually set to each temperature starting with the coolest condition. Once the chamber had stabilized at the desired temperature the load-shedding receiver was energized by making electrical connection to the power line. Shortly after powering the receiver, the power line transmitter in another room, also connected to the power line, was activated.

A successful test would indicate a 6 Ω reading on the multimeter, followed by an open circuit reading after the load-shedding signal has been received and verified by the receiver (see Table 9).

Table 9. Test results

Temperature Setpoint (°C)	Reception of signal and activation of load-shedding
25	Yes
35	Yes
45	Yes
55	Yes
65	Yes

6.5.3. Power line carrier receiver testing (final design)

The add-on load-shedding prototype device was tested against three other commercial PLC devices and the superheterodyne radio receiver prototype for a comparison of how well the devices perform at receiving signals at various locations within a building and for different buildings. Tests were conducted at three building sites: the LRC, the Greene building on the RPI campus, and Curtis Lumber, a retail lumber and hardware store in a warehouse setting.

Detailed results of the testing are given in Appendix F. Of the commercial devices tested, the Adaptive Networks, Inc. (ANI) system was a very large and very expensive system used to establish computer-based communications between remote locations. According to ANI specifications, the AN192 is BPSK based, uses a frequency band below 450 kHz that is wideband spread-spectrum-like, has a 19.2 kbps payload throughput, a bit error rate less than 10^{-9}, supports up to 65,534 nodes per network, has a minimum receivable signal level 100 μV p-p, coverage anywhere on one side of a transformer, transmission distances tested up to 50 km, and complies with FCC regulations. The cost of the two devices (one to transmit and one to receive) was $1,500. Clearly, this device is

in a different league than the low-cost, low power devices required for load shedding, but it is instructive to use for comparison in a test such as this to show what is possible if cost and size were not limitations. As expected, the ANI devices performed better than the other devices tested and had nearly 100% coverage for the locations tested.

The other commercial device used in all tests was a specially built prototype by Ariane Controls. In a related project, Instant Snap-in Load-shed Device for Incandescent Lighting, funded by California's Energy Innovations Small Grant program, Ariane Controls was working with the LRC to develop an incandescent load-shedding device. The design of the Ariane prototype is FSK-based, with the carrier programmable from 50 kHz to 500 kHz, the data rate programmable from 100 to 30000 baud, complete medium access control (MAC) logic, forward error correction, protocol neutrality, and many other features. The projected cost of the Ariane load-shedding circuit (according to Ariane Controls) is $4.50 per device in quantities of one million. The Ariane device performed about as well as the LRC synchronous detection-based receiver. It is difficult to say definitively which performed better since the Ariane device would fail for some circuits where the LRC prototype would work and vice-versa. As it turned out, the superheterodyne-based prototype performed worse overall than the other devices which was surprising because of its great sensitivity. The project team speculates that power line noise/interference reduced the performance of the radio-based, superheterodyne circuit.

The third commercial device was made by Cepco Products, Inc., and uses a radically different approach than the other devices. Instead of superimposing a relatively small high frequency voltage on the power lines, the Cepco device signals by injecting high voltage (~100 V) pulses on the power line with durations of a few microseconds. Called "Zero Crossing Digital Pulse Modulation," the technique puts the pulses at the zero crossing of the 60 Hz AC waveform, forming a pulse train at 120 Hz for which the number of pulses can be counted to signal different events. Testing of this device was limited to within the LRC building because it was observed that it greatly interfered with triac-based incandescent dimmers, and it most likely interfered with all types of SCR and triac-based devices.

Testing in the buildings covered areas ranging from 15,000 to 30,000 square feet. Of the 62 locations tested, the LRC synchronous detection receiver worked in 56 locations (90%), compared to the ANI transceiver working at 61 locations (98%), the Ariane Controls device at 54 locations (87%) and the LRC superheterodyne device at 41 locations (66%). These results indicate that for the LRC synchronous receiver a coverage area for each transmitter is within the range of areas tested. Assuming that typical fluorescent lighting densities are approximately one ballast per 100 square feet, each load-shedding signal transmitter could control 150 ballasts or more. It is important to note that this testing was performed on 120 V circuits powering both lighting loads and plug loads. The plug loads consisted of a wide range of office equipment and test and measurement equipment, including surge protectors and line filters, as well as some light duty machinery. Much better overall performance would be expected on circuits that power mainly the lighting, especially 277 V dedicated lighting circuits, as noise and signal attenuation would be much lower than for plug load circuits.

6.5.4. LRC load-shedding demonstration

A complete load-shedding system was installed in an open-office location at the LRC facility in Troy, NY. The purpose of the installation was twofold. First, the team needed to demonstrate the functionality and reliability of the prototype load-shedding system in an office setting. Second, the team wanted to have a realistic demonstration of the load-shed lighting concept to show to companies and organizations interested in load-shed lighting opportunities, as well as other visitors to the LRC.

The testing area measured approximately 400 square feet and contained three office cubicles and circulation area in an open office plan. The electric lighting consisted of 12 fluorescent, semi-indirect lighting fixtures each containing two Sylvania F32 T8 lamps. The fixtures are operated in tandem using a Magnetek model B432I120RH, four-lamp ballast with a ballast factor of 0.88. The lighting fixtures in the space were arranged in rows perpendicular to the windows. Two fixtures were located above each of the three offices, all controlled by a central relay panel (GE Industrial Controls). The interior wall and ceiling reflectance was approximately 85%. Figure 26 is a photograph of the ceiling of the demonstration area.

Figure 26. Ceiling of load-shed lighting demonstration area

The electrical layout of the office consists of two 20A circuits, each with two individually controlled branch circuits. On/off control is through a GE controls relay panel with low-voltage wall switch controls. Table 10 shows the loading on each circuit and Figure 27 shows the lighting layout color coded for each circuit. The demonstration area, along with adjoining offices and lab space, is provided powered from a three-phase distribution panel.

Table 10. Electrical load distribution of demonstration area

Relay 3	Circuit 22	2.83 A
Relay 4	Circuit 22	1.99 A

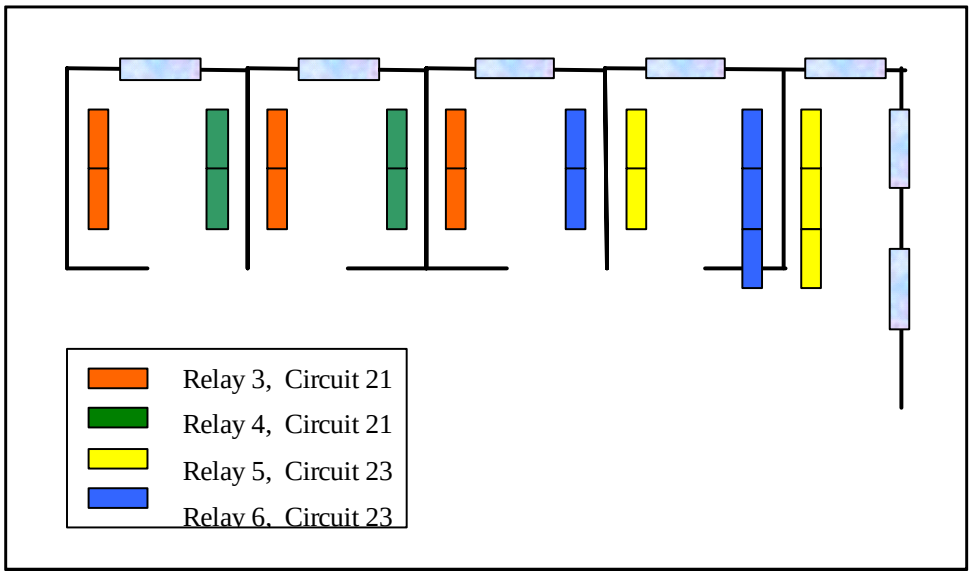

Figure 27. Circuit layout of demonstration test area

The four-lamp ballasts in the fixtures operate the lamps in pairs of two with each pair of lamps sharing a common electrical connection. Because of this circuit topology, and due to the current limitations of the add-on prototype, two add-on devices were used for each ballast, one for each pair of lamps. Each add-on device is connected in series to the common lead connecting each pair of lamps to the ballast. The receiver board is powered by the same supply as the fixture via a connection to the power lines inside the ballast compartment of the fixture at the location where the ballast is connect to the power lines. This connection is also the means for receiving the power line carrier signal. Figure 28 shows the inside of the ballast compartment of the fixtures with the add-on load-shedding devices installed.

Figure 28. Photograph of fixtures in demonstration area showing open ballast compartment with the add-on load-shedding prototypes installed.

6.5.5. The PLC transmitter

A PLC transmitter was constructed to signal load shedding. When activated the transmitter injects a 145 kHz square-wave voltage waveform on the power line with the required phase stepping 7.5 Hz am modulation synchronized to the 60 Hz power line phase. The amplitude of the injected waveform is approximately 3 V peak. Assuming a line impedance of 10 ohms (at 145 kHz), the power injected onto the power line is approximately 1 W.

Integrated into PLC transmitter is a web server chip, programmed to allow remote control of the activation and deactivation of load-shedding over the existing local area computer network (LAN). Figure 29 shows a screen shot of the web page that is stored in the transmitter. The transmitter connects to the LAN using the Ethernet protocol via an RJ45 jack. Figure 30 is a photo of the transmitter showing the power line connection plug and the Ethernet connector.

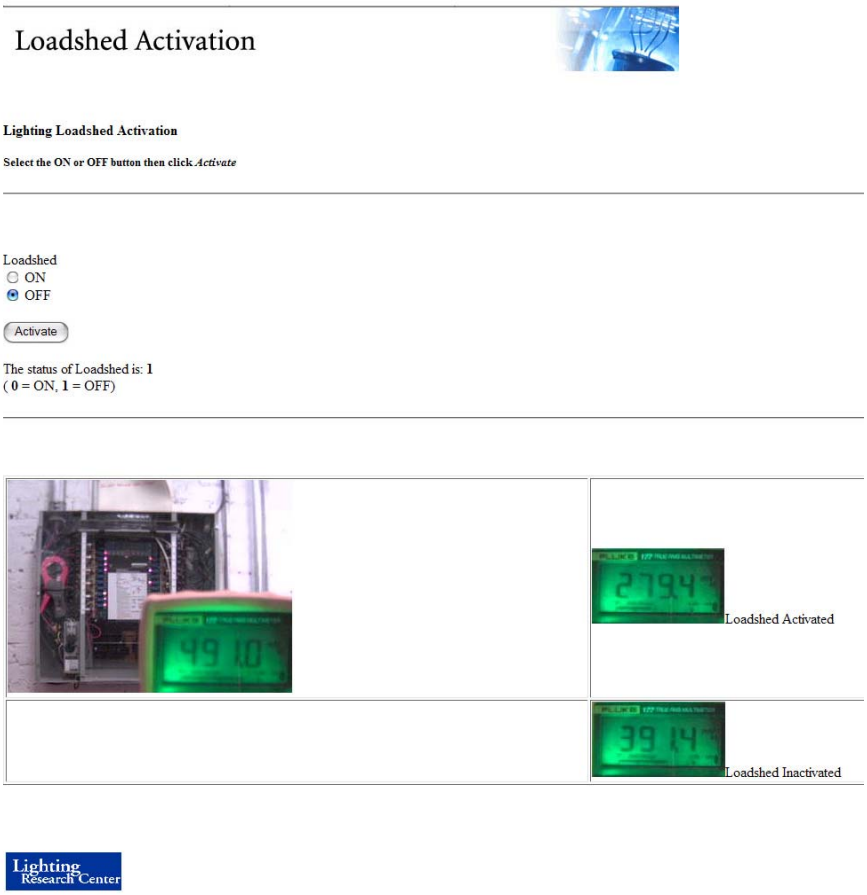

Figure 29. Website for initiating load-shedding signal remotely through an Internet website

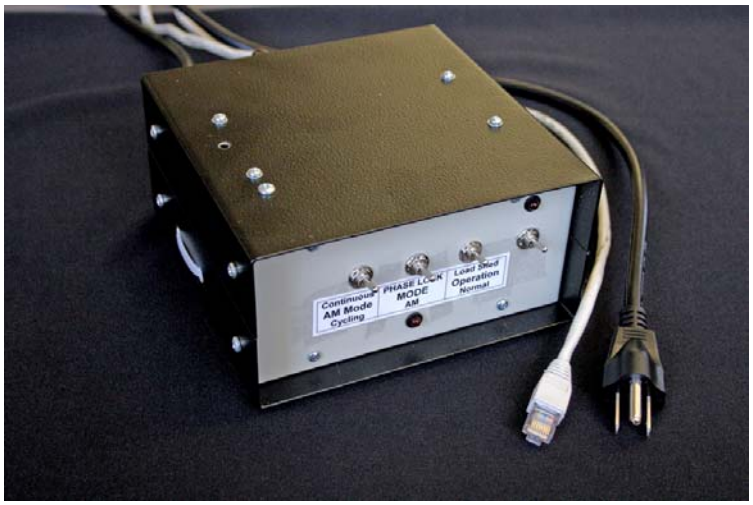

Figure 30. Power line carrier transmitter incorporating web server and Ethernet interface (via RJ45 connector) for remote activation of load-shedding via a local area network

6.5.6. Functionality testing

The purpose of the following test is to demonstrate the reliability of the prototype load-shedding demonstration system within an office setting over the course of one hundred trials.

In order to estimate the coverage of the load-shedding system, circuits were traced from the lighting fixture to the panel board. Here information was collected regarding the circuit and phase of each fixture. In the demonstration area, two 20A circuits cover the lighting in the area, controlled by four relays. The two circuits are on different phases, creating the need for a phase bridge to couple them (see Table 11).

Table 11. Phase distribution for each circuit in the demonstration area

Relay 3	Circuit 22	Phase A
Relay 4	Circuit 22	Phase A
Relay 5	Circuit 23	Phase B
Relay 6	Circuit 23	Phase B

The load-shedding transmitter was placed approximately 120 feet from the demonstration area in an adjoining lab. Coupled onto phase A, the unit was initially tested for functionality. A phase bridge was in place to allow the load-shedding signal to propagate to the other power line phases.

A Yokogawa model 2355 wattmeter was connected to one of the light fixtures to measure the reduction in power during the load-shedding process and to verify that the load had been reduced. While only one fixture was connected to the wattmeter, the others were visually checked at the beginning and end of the experiment for their dimming response. Later, an ammeter was added to the two circuits powering the fixtures so that the actual current reduction due to load shedding could be measured. For the ballast type used, the current reduction is nearly proportional to the wattage reduction, slightly underestimating wattage due to a slight increase in power factor under dimmed conditions.

Using visual verification of transmission and reception, trials were conducted to test the reliability of the system. Wireless video cameras (web cams) were placed at the transmitter and wattmeter locations to monitor the status on a closed circuit television system. An indicator light illuminated on the front panel of the transmitter when the load-shedding signal was activated. The wattmeter showed real time information on the power of the lighting load.

6.5.7. Results

Data was collected prior to repeatability testing to verify the reduction in load from non load-shedding state to the load-shedding state. Table 12 summarizes these findings.

Table 12. Individual circuit load with and without load shedding activated

LOADSHED ACTIVATED?	RELAY NUMBER	CURRENT (A)	REDUCTION
NO	3	2.88	31%
YES	3	1.99	
NO	4	2.03	30%
YES	4	1.42	
NO	SYSTEM 3 & 4	4.91	31%
YES	SYSTEM 3 & 4	3.41	

Although the ballasts reduced their wattage by approximately 33% under the load-shedding condition, a small amount of other electrical devices on the same circuit reduced the overall percentage in power reduction.

Repeatability testing was done by controlling the transmitter via the load-shedding website. Once activated, the transmitting indicator light came on and was verified on the video monitor. Power reduction was checked by viewing the second camera located at the watt meter location. Once the receiver board had received the load-shedding signal and dimmed the lamps, the value on the watt meter would drop. This indicated a successful transmission.

One hundred trials of activating and deactivating load shedding and verifying its operation were performed over the course of three days at different time of the day. All 100 trials were successful.

7.0 Conclusions and Recommendation

7.1. Conclusions

The switched capacitor circuit developed reduces current to the lamps by the fixed amount of approximately 35%, resulting in a power reduction of 33%. The two PLC signaling methods developed—a heterodyne detection circuit based on an am radio receiver chip and a novel synchronous detection method using sub-line frequency harmonics—contribute less than $2 to the manufacturing cost of the load-shedding ballast. Laboratory testing showed that the synchronous detection method provided robust detection of signals broadcasted on the power lines, comparable to other commercial power line communication devices costing much more. Reception of the load unique load-shedding signal instructs the load-shedding ballasts to dim. The laboratory testing demonstrated that the system works as designed and produces the 33% reduction in power.

Economic analyses determined the load-shedding ballast's $9.00 incremental cost over that of a standard instant-start ballast would give the customer a payback of approximately three years. As a retrofit, this device retrofit device would also have an installation costs at least $10.00. This added installation cost doubles the payback period to greater than six years. However, the load-shedding ballast—having all of the components integrated into the ballast case—did pass the total resource cost test. When the ballast is being installed as part of new construction or remodeling or for reasons such as energy efficiency, no added installation cost accrues.

LRC partnered with OSRAM Sylvania (www.sylvania.com), a large ballast manufacturer, to commercialize the load-shedding ballast, and the company has produced a first batch of 500 ballasts. Of these, 150 were installed in a section of the library at University of California, Santa Barbara, in September 2006 for a several-month demonstration. Early tests showed that the ballasts effectively dimmed the lighting by one-third in response to a signal sent from outside the building. The ballast signaling device used in this project was developed by LRC.

Another 150 ballasts were installed in a building in Rye, New York, owned by Consolidated Edison Company of New York, and have also been successfully tested. The New York demonstration, which is also focused on development and testing of a commercial ballast signaling device, is being co-funded by the New York State Energy Research and Development Authority (NYSERDA).

At the close of the demonstration, the ballasts are expected to remain in the buildings.

7.2. Recommendations

The prototype should be installed for demonstration in an end-user facility to obtain data on field performance, peak demand savings and customer satisfaction. For best results, it is recommended that the test installations be coordinated between the California Energy Commission and NYSERDA. Both entities have been cooperating in the development the load-shedding ballast and both have expressed interest in its demonstration in real world environments. The demonstrations should contribute to the resolution of commercialization decisions by the manufacturing partner or other producer.

7.3. Benefits to California

Based on an expected peak lighting load reduction of at least one-third and a market penetration of 4% into the new construction and remodeling markets for the load-shedding lighting system developed by this project, LRC expects to reduce peak electric demand in California by 2.4 MW within three to five years of the commercialization of this system. This number will continue to grow each year and could represent load reductions of 100 MW in the future.

8.0 References

Dostert, Klaus. 2001. *Powerline Communications*. Prentice Hall, Upper Saddle River, N.J.

Federal Energy Regulatory Commission. 2001. *Ensuring Sufficient Capacity Reserves in Today's Energy Markets: Should We? And How Do We?* Study Team Discussion Paper. Washington, D.C.

Garceau, Steve. 2000. "Flexible Power for Changing Times." *Energy User News*. Accessed at :
http://www.energyusernews.com/eun/cda/articleinformation/features/bnp__features__item/0,2584,12057,00.html

Hammer, E.E. 1995. "Cathode fall voltage relationship with fluorescent lamps." *Journal of the Illuminating Engineering Society* 24, no. 1: 116-122.

Lighting Research Center. 2002. *Reducing Barriers to the Use of High Efficacy Lighting Systems (Final Report Year 1).* Contract Number: DE-FC26-01NTY0986. Rensselaer Polytechnic Institute, Troy, N.Y.
http://www.lrc.rpi.edu/researchTopics/reducingBarriers/pdf/finalreportyear1.pdf

Lighting Research Center. 2003a. *Reducing Barriers to the Use of High Efficacy Lighting Systems (Final Report Year 2).* Rensselaer Polytechnic Institute, Troy, N.Y. http://www.lrc.rpi.edu/researchTopics/reducingBarriers/pdf/finalreportyear2.pdf

Lighting Research Center. 2003b. *Energy Saving Load-shedding Ballast for Fluorescent Lighting Systems: Task 1 Report, Occupants' Dimming Requirements.* Rensselaer Polytechnic Institute, Troy, N.Y.

Lighting Research Center. 2003c. *Energy Saving Load-shedding Ballast for Fluorescent Lighting Systems: Task 4 Report, Investigation of Control System Options for Load Shedding.* Rensselaer Polytechnic Institute, Troy, N.Y.

Lighting Research Center. 2003d. *Energy Saving Load-shedding Ballast for Fluorescent Lighting Systems: Task 2, Investigation of the effects of dimming on lamp life.* Rensselaer Polytechnic Institute, Troy, N.Y.

Lou, Xiaomei. 2003. *Cathode fall voltage and lamp life for instant-start fluorescent systems operated at low current levels*. Master's thesis. Rensselaer Polytechnic Institute, Troy, N.Y.

Lowry, E.F. 1951. "Thermionic cathodes for fluorescent lamps and their behavior." Illuminating Engineering 46: 288-294.

McGinty, Tom. 2002. "LIPA: Ease Up On the Juice, LI." *Newsday*. New York.

Murphy, Carol and Steven C. Sullivan. 2002. "New York's All-Time Electric Consumption Record May Be Set Tomorrow (Tuesday, July 30, 2002), says NYISO." New York Independent System Operator Press Release.

National Lighting Product Information Program. 1992. *NLPIP Specifier Reports: Power Reducers.* Lighting Research Center, Rensselaer Polytechnic Institute, Troy, NY.

National Lighting Product Information Program. 1999. *NLPIP Specifier reports: Dimming electronic ballasts*. Lighting Research Center, Rensselaer Polytechnic Institute, Troy, NY.

National Lighting Product Information Program. 2000. *NLPIP Specifier Reports: Electronic Ballasts.* Lighting Research Center, Rensselaer Polytechnic Institute, Troy, NY.

New York Independent System Operator. 2001. NYISO PRL Program Evaluation: Executive Summary. http://www.nyiso.com/services/documents/groups/bic_price_responsive_wg/demand_response_prog.html

Rea, M.S. (ed.). 2000. *IESNA Lighting Handbook*, 9th ed. Illuminating Engineering Society of North America, New York.

Tetri, E. 2000. "Daylight linked dimming: Effect on fluorescent lamp performance." *Lighting Research and Technology* 34, no. 1: 3-10.

Van der Gracht, P. K., and R. W. Donaldson, R.W. 1985. "Communication using pseudo-noise modulation on electric power distributions circuits." *IEEE Transactions on Communications* 33, no. 9: 964-974)

Watson, D. S., Piette, M. A., Sezgen, O., and Motegi, N. 2004. "Machine to Machine (M2M) Technology in Demand Responsive Commercial Buildings." *Proceedings of the 2004 ACEEE Summer Study on Energy Efficiency in Buildings.* ACEEE. Washington, D.C.

Waymouth, J. F. 1971. Electric Discharge Lamps. MIT Press. Cambridge, Mass.

9.0 Glossary

AC	alternating current
AGC	automatic gain control
ANI	Adaptive Networks, Inc.
ASK	amplitude shift keying
BEF	ballast efficiency factor
BOM	bill of materials
cff	critical flicker fusion
CPP	critical peak pricing
CPUC	California Public Utility Commission
db	decibel
DOE	Department of Energy
Energy Commission	California Energy Commission
ft^2	square feet
Hertz	Hz
HVAC	heating, ventilation, and air conditioning
in	inch
kHz	kilohertz
kW	kilowatts
kWh	kilowatt-hour
IOU	investor-owned utility
ISO	Independent System Operator
LADWP	Los Angeles Department of Water and Power
LAN	local area network
LED	light-emitting diode
LRC	Lighting Research Center
mA	milliamp
MAC	medium access control
ms	millisecond

MOSFET	metal-oxide-semiconductor field-effect transistor
mV	millivolt
MW	megawatts
NEMA	National Electrical Manufacturers Association
NLPIP	National Lighting Product Information Program
NTC	negative temperature coefficient
NYSERDA	New York State Energy Research and Development Authority
PF	power factor
PG&E	Pacific Gas and Electric
PIER	Public Interest Energy Research
PLC	power line carrier
PTC	positive temperature coefficient
PWM	pulse-width-modulation
SCE	Southern California Edison
SCR	silicon controlled rectifier
SDG&E	San Diego Gas and Electric
SMUD	Sacramento Municipal Utility District
SSR	solid-state relay
THD	total harmonic distortion
UL	Underwriters Laboratory
V	volt
W	watt

Appendix A: Load-Shedding Roundtable

Background

The goal of task 3.2.1 is to obtain input from lighting manufacturers and lighting decision makers for the design and functionality of the load-shed ballast and associated control system. Lighting decision makers are defined as end users, utility representatives, regulatory officials, energy-efficiency program implementers and other lighting decision makers in California. Input from these groups was to be gathered through the use of roundtables. This detailed report, listing the results of the roundtables and recommending load-shed ballast design necessities, completes the task.

To achieve the stated goal, the Lighting Research Center (LRC) conducted two roundtables. The first roundtable involved a focus group of end users. Participants were non-residential building owners, managers and/or tenants of large buildings (100,000+ square feet). Fourteen customers were invited to the focus group and confirmed their participation. However, four customers actually attended the meeting.

The second roundtable included utility representatives, lighting consultants, manufacturers, lighting researchers and representatives of state agencies. Lists of the invitees and participants for each focus group are included at the end of this report. Roundtables and focus groups provide qualitative market research. While valuable information was collected using this method, no statistically accurate measurement of the general population's feelings regarding the load-shed ballast can be made using qualitative research. However, the LRC believes the insight provided by end users and the lighting community in California provided substantial input as to the characteristics that the load-shed ballast must include to be successful in the marketplace.

Findings from Non-Residential Customer Focus Group

As stated above, four of the fourteen invited and confirmed building owners, managers and/or tenants attended the focus group on March 5, 2003. These customers are responsible for the payment of the electric utility bills. They are non-residential customers with substantial buildings or complexes (greater than 100, 000 square feet).

While a small sample was present for the focus group, the LRC believes the group provided valuable insight into the characteristics that the load-shed ballast must have to succeed. The LRC is comfortable that the issues raised by this focus group would have been similar to those raised by a larger sampling. However, less certainty is placed on the ranking of the importance of the issues provided by the participants. Four participants are insufficient to place confidence in the issue rankings. The LRC would suggest additional focus groups throughout California be conducted to improve the certainty of the results if the project budget will allow for such activities. The focus group explored four issues:

1. Electric load management during times of high electric usage
2. The use of lighting systems to reduce electric loads
3. The load-shed ballast
4. Communication issues

General Load Management Issues

Participants defined load management as controlling the amount of energy used to help the facility or the energy provider at peak times as defined by the utility or energy provider. Only one of the four participants is participating in a utility-sponsored load management program. In designing a load management program, customers indicated they wanted the program to have the following elements:

- Tangible customer benefits such as monetary payments. (What's in it for the customer approach.)
- Products to help control loads.
- A simplistic (easy to understand and use) load management program.
- A utility company to pay for part of the first cost to install any needed control systems.
- A financing program for any equipment that a customer installed to control loads.
- A short implementation period for participating in the program rather than a long period of time (six months) to have the utility or others install equipment and get all the paperwork completed.

Of these, customers ranked monetary compensation for participation as their number one reason to participate. This was followed by a financing program and the utility paying for part of the first cost. When customers were asked what would cause them not to participate in a load management program, they listed the following:

- The cost to implement the program.
- No financial incentive for participation.
- Long payback.
- Difficulty in participation.
- Lack of support commitment from the program operator.
- Budget issues for the customer.
- Called upon too often to curtail load. (aided response)
- Penalty for not shedding load. (aided response)

Note: An "aided response" is one that the facilitator recommends to the group and the group agrees it is a concern and should be included with the other issues. Clearly, not providing a monetary incentive would cause customers not to participate. The participants also felt the cost to implement the program must be in line with the benefits.

Use of Lighting to Reduce Electric Loads

Three of the four participants believed using the lighting system to reduce electric loads during times of peak usage is a good way to reduce loads. When asked why it was a good load to control, they indicated the following:

- There is so much lighting in use.

- Simple to control.
- Little or no impact on building occupants or operations if done correctly.
- Takes less time to reduce lighting loads than other types of loads.
- Payback is quicker.

Customers were also asked why they would not use their lighting to reduce electric loads. Listed below are their responses:

- It is a small part of the electric load.
- Lighting is used less during times of longer daylight.
- Safety issues of people not being able to see what they are doing.
- Security issues.
- Changes in lighting change the appearance of the space.
- Lighting can only be reduced so much before it effects the productivity of building occupants.
- Expense of replacement lamps.

The LRC explored with customers how they do/would control lights to reduce electric loads. Customers indicated the following.

- Motion sensors.
- Timers.
- Manual switching.
- Control through a building's energy management system. (Note: Of the two customers, who have EMS, neither customer's lighting systems are included in the building's EMS system.)

Customers were asked to list the characteristics of an ideal lighting control system to reduce electric loads. The following are their responses and a ranking of their importance:

- EMS to control the lighting from one location rather than having individuals physically go around the building to shut off lights
- A system that is easy to use on a computer.
- Remote access to the system for operation and maintenance.
- The system must be easy to use.
- The system must be able to grow as the customer grows.
- There must be support/assistance from the manufacturer to the customer.
- Maintenance free system. (aided response)
- Cost effective system. (aided response)
- System must be able to be installed by in-house people: no specialist needed. (aided response)
- Reliable. (aided response)
- If the system failed, it must fail in the on position.

The most important issues regarding a lighting control system according to the focus group participants are the ability to have the lighting controlled by the building's EMS from a single location and the system must be user friendly.

Attributes/Characteristics of the Load-Shed Ballast

An explanation of the concept of the load-shed ballast was given to the focus group participants. They were then asked a series of questions regarding the characteristics of the ballast. Participants were asked what attributes the load shed ballast had to have to be used by customers. The following are their comments:

- The ballast must be low maintenance.
- Longevity of the ballast is a concern.
- The ballast must be cost effective.
- The operation of the ballast must not flicker lights when dimming.
- If the ballast fails, the lights must fail in the on position. (100 percent output)
- The ballast must be easy to install.
- A UL listing must be included for the ballast.
- The ballast must be easy to purchase. (availability)
- The ballast must use a wireless signal.
- Other building signaling devices cannot interfere with the signal to the ballast.
- The ballast cannot reduce lamp life.
- The ballast must be compatible with other lighting equipment provided by other manufacturers.
- The ballast must fit into a standard light fixture.

Of these attributes, cost effectiveness is the most important to the focus group participants. Ease of installation is also important. Participants were asked how aggressive the dimming could be as a percent of dimming. One participant believed light output could be dimmed 25 percent, two believed it could be dimmed 30 percent and one believed it could be dimmed 40 percent. All participants wanted a demonstration of the load-shed ballast in their own facility before they would commit to a full-scale installation.

The LRC asked participants how they wished to control the load-shed ballast and how automated the process could be. Participants indicated:

- The preferred method of controlling the ballast was through an EMS with just one data entry required.
- Utilities could control the ballast from a remote location if the customer had the ability to override the dimming.
- A manual system with the ability to push just one button to achieve the dimming is also acceptable.
- The ability to have different parts of the building on different control zones is also desirable. Participants would prefer to control the load-shed ballast directly but are willing to give up control to utilities if they retain the right to override.

Participants were asked where they would prefer purchasing the load-shed ballast and its control system.

- Authorized distributors.
- From a manufacturer.
- Utility.

In all cases, participants wanted the load-shed ballast to be manufactured by a recognizable brand name. They wanted the ballast and control system to be able to be installed by in house personnel or electrical contractors as opposed to specially trained (high priced) technicians.

Communication Issues

Participants were asked what information they would require to purchase and use the load-shed ballast system. The following are their responses:

- How it affects the bottom line.
- Specifics on how the system works.
- What are the dimming standards.
- How much of a rebate is available.
- What are the penalties for not shedding load.
- Warranty information.
- Case studies of other installations.
- References.
- Who will control the load.
- Who supports the technology.
- Length of required customer and utility commitment to the program.
- Clear utility communications when load shed events occur.
- Operating instructions. (aided response)

The most desired information is how the payment for shedding load will offset any costs to participate. Also specific information is required on how the system works.

Participants were also asked where or from whom they would expect to obtain this information.

- The utility.
- A distributor.
- The manufacturer.
- Other customers.
- Advertising.
- Seminars.
- The government.
- Trade shows.
- Trade associations.
- A web site. (aided response)
- Trade journals. (aided response)

Of these sources, participants preferred to have the information presented to them by their utility company or their trade associations.

Findings from Utility Personnel, Energy-Efficiency Program Administrators, Lighting Consultants, LBNL and Others

A second roundtable was conducted on March 6, 2003 with utility representatives, lighting consultants, lighting and control equipment manufacturers, lighting researchers, members of the PIER Lighting Research Program and representative from state agencies. A list of attendees is included at the end of this report. The goals for the roundtable were to explore existing load management programs, discuss compatible lighting technologies being developed by others, talk about the use of lighting systems to reduce electric peak loads and, finally, discuss and demonstrate the load-shed ballast with this non end-user contingent.

Utility representatives from Southern California Edison (SCE), Sacramento Municipal Utility District (SMUD) and Pacific Gas and Electric (PG&E) were present. Each utility has a load management program for its customers. These programs are dissimilar and reflect the needs of each utility. SCE has programs for both residential and business customers with approximately 98,000 customers participating. The number of participants has been declining each year. Of the participants, only about 40 percent actually reduce load when called upon. PG&E concentrates its load management program efforts with business customers. SMUD operates a couple of load management programs with its customers. Descriptions of two SMUD programs (PowerNet and PowerDirect) are provided separately from this report.

The utility representatives were asked what would it take to include the load shed ballast in their load management programs. Responses follow:

- The decision to include the load shed ballast and its companion retrofit device is largely financially driven.
- The system must provide reliable and predictable load reductions to the utilities.
- Utility representatives present a portfolio of energy management tools and programs to their customers. This load-shedding technology would be just one of several offerings in their portfolio.
- The customer may be better served to re-lamp an entire facility and lower overall light levels rather than install the load-shed device and see energy savings only during peak periods.

Comments from other roundtable participants concerning utility-based load management programs included the following:

- Utilities still have generation capabilities that were not sold to third parties.
- It appears California governmental bodies and utilities are returning to a more vertically integrated (regulated business) model for planning purposes.
- The utility rate schedules should reflect/encourage load shedding capabilities.
- Utilities have the relationship with end-use customers.
- The required hours of load management are different throughout California and may be as high as 676 hours in some places to account for summer peak periods and meet tariff requirements.
- PG&E claims the peak load to average load gap is getting smaller. This may cause load shedding to be less acceptable.
- Two-way signaling is important to utilities so they may ensure the load has been shed.
- Lighting control manufacturers will not start a product line based on utility incentives.
- Load shedding is not a strategy in itself. It needs to be part of a larger program of energy management strategies.
- The Energy Commission may want to look at a future research program that involves installing a switch on the "B" ligting circuit of a building. The switch would provide load-shedding during peak energy periods. It could be part of a Title 24 code requirement.
- A Critical Peak Pricing (CPP) rate is proposed for the three IOUs and could become effective in 2003. Information about the rate is available at http://www.energy.ca.gov/demandresponse/index.html.

The LRC discussed and demonstrated the load shed ballast technology. Since the current prototype is based on an instant start ballast platform, the number of hours per year that dimming could be achieved without noticable lamp life loss is currently estimated to be 100 hours. A comment was made that an outcome of the research could

be to approach lamp manufacturers to change lamp designs to maximize life when dimming. i.e., change the standard lamp current from 265 milliamps (the standard when using a magnetic ballast) to 180 milliamps (a more reasonable value with electronic ballasts).

Other technical suggestions from the participants included keeping options open for two-way signaling and the use of existing utility notification systems to customers (phone call, web based, RF to residential customers and paging). Discussions also indicated that efforts should possibly be concentrated on the retrofit device rather than the ballast. The rationale for this suggestion is the large stock of existing buildings.

The group also discussed various cost issues and benefits to end-use customers. It appears the price of the load-shed ballast will be $9 above the cost of an instant start ballast. The companion add-on load shed device will be approximately $9. A $10 installation fee for any retrofit situation must be added to the material costs. The LRC estimates the value to the customer to reduce load using the load-shed ballast is approximately $3 per year based on a three lamp T8, electronic ballast light fixture. This savings is based on an average of utility rate structures across the country and is not specific to California. It was suggested that an economic model be developed for California utilities that could be used for marketing purposes as well as the development of the ballast. The ideal payback for business customers is between one and three years while governmental customers are willing to accept much longer paybacks.

Marketing should focus on owner-occupied buildings because decision making is centered in one organization. In tenant occupied buildings, building owners do not feel an obligation to install cost reducing devices because many times the tenant pays the elecrtric bill and receives the benefits, not the building owner.

Roundtable participants were asked why customers participate in current load management programs. Responses follow:

- A clear price signal is given to customers to reduce load.
- Customers feel an obligation to be good corporate citizens and assist in maintaining the integrity of the electric system.
- Customers do not participate in load management programs because rental space is considered "class A" space. Tenants pay a premium for this space.
- Roundtable participants believe customers do not use their lighting systems exclusively to control loads because the control is not automated. Someone has to be sent to each lighting panel and manually turn off lights. When lights are reduced for load shedding purposes, customers use switches or breakers to manually turn the lights off. SMUD has a system that is web-based that can provide direct control of lighting systems.

All roundtable participants were asked to list the load-shed ballast characteristics they would require the ballast to have. Responses follow:

- Long ramp period for dimming to pre-set limit.
- Must not impede the productivity of the customer.
- Flexibility on how to control/send the signal from the utility.
- Must be compatible with future technologies.
- Must produce less than 20 percent total harmonic distortion.
- No interference with other customer equipment.
- A "good housekeeping" seal of approval beyond just UL listing (like Energy Star).
- Minimal impact on lamp life and no impact on manufacturer's warranty.
- A device to limit number of hours per year in the dim mode.
- Clear economic payback to the customer.
- Lower lifecycle cost.

Conclusions and Recommendations Regarding the Load Shed Ballast Design

This section includes the conclusions and recommendations gained from both the Roundtable and the User Focus Group. Action items were also identified.

Conclusions

The following are the conclusions from the Roundtable and User Focus Group.

- Utility sponsored load management programs must provide monetary payments to attract participating customers.
- Customer participation in utility based load management programs has declined in recent years.
- To attract customers to load management programs, the cost to participate must be in line with the benefits.
- Lighting is an excellent load to control because there is so much of it and there is little impact on building occupants or operations if done correctly. Lighting also provides a predicable amount of load shed.
- An ideal lighting control scheme must allow the lights to be dimmed from a single location and must be easy to use.
- The load shed ballast and its companion retrofit device must be cost effective and be easy to install.
- Other important characteristics that the load shed ballast must have are: minimal impact on lamp life with no impact on manufacturer's warranty, a "good housekeeping" seal of approval beyond just a UL listing (like Energy Star), the signal to dim cannot create interference with other customer equipment and there must be technical support of the ballast and signaling equipment after installation.
- Thirty percent dimming of light output would be acceptable to customers.

- Customers would allow utilities to control the load shed ballast directly, if customers had override capabilities.
- Some type of cost/benefit analysis specific to the customer is required to achieve customer acceptance of the program.
- Customers want demonstrated proof that the load shed technology works.
- Customers would look, first, to their utility for information regarding the load shed ballast and a related load management program and, second, to their trade associations.
- Electronic communications regarding information on the load shed ballast or load management programs is not desired by customers.

Recommendations

The following are the recommendations from the Roundtable and User Focus Group.

- The cost for load shed ballast or the companion retrofit device cannot exceed more than three years worth of customer monetary benefits from participation in utility based load management programs. Equipment rebates may assist in increasing benefits to customers.
- The load shed ballast must encompass the characteristics of not reducing lamp life significantly and fail in the full on position. Signaling cannot interfere with other customer operations and the equipment must be easy to install by "in house" personnel without special training. The load must be able to be controlled from a single location.
- The LRC should concentrate its development efforts on the load shed retrofit device because of the substantial stock of existing commercial and industrial buildings.
- The LRC must find a manufacturer with customer name recognition and an established distribution network to produce and obtain, as a minimum, a UL listing for the load shed ballast and related signaling device. This manufacturer needs to provide follow on technical support to customers after installation. A customer financial model must be developed that includes utility rate structures, rebates and equipment costs to assist utility representatives in selling this load management program and to prove to customers the benefits of participating in such a program.
- Utilities should be allowed to market load management programs to customers including the load shed ballast program since they are the most trusted source of information in this area.
- Utilities or others should include demonstrations of the load shed ballast technologies in actual installations around California for interested customers to view.
- While not mandatory for the completion of Project 3.2 "Energy Efficient Load Shedding Technology", it is recommended additional customer focus groups be undertaken across California to develop a clearer strategy for the marketing of the load shed technology.

Action Items

The following action items were identified.

- Prepare an economic model using the Critical Peak Pricing (CPP) rate for the three IOUs to gauge the potential energy cost savings for building owners.
- Focus on the retrofit load shedding device first.
- In conjunction with the Market Connection Element, define applications of load shedding dimming capabilities that are limited to approximately 100 hours per lamp in the existing commercial building market.
- Work with the Market Connection Element to gain greater utility commitment for the retrofit load-shedding device to be added to their portfolio of products offered to their customers. Utility commitment is critical to the successful launch of this product because of the emphasis end users place on receiving information regarding load management programs through their utility.

End User Roundtable Attendees

Name	Status	Company	Bldg./Space Size	Invited/attended
John Bowker	Manager	John Bowker & Assoc.	100,000+ sf	invited
Atlantis Dabalos	Owner	California Family Fitness Center Inc.	500,000+ sf	attended
Sally Flynn	Owner	Sutter Senior Care Ctr.	100,000+ sf	invited
Dave Fox	Owner	Sacramento Bee	480,000 sf	invited
Ceaser Goldsby	Manager	Eskaton Village	500,000+ sf	invited
Dave Haness	Tenant	Country Club Lanes	77,000 sf	invited
Jenn Jacques	Tenant	FedEX Ground	100,000+ sf	invited
Julie Karle	Owner	KCRA TV	75,000+ sf	invited
John King	Owner	Red Lion Inn	230,000 sf	attended
Colleen Maloney	Tenant	St. Patrick's School	100,000+ sf	invited
Shaun Meyer	Manager	Sheraton Grand Sacramento	425,000 sf	attended
Crystal Perras	Tenant	Pacific Pallet Exchange	50,000+ sf	invited
Miguel Sanchez	Tenant	Univision TV	57,000 sf	invited
Karl Shroeder	Owner	Capitol Christian Center	211,000 sf	attended

Energy, Lighting and Governmental Professionals Roundtable Attendees

Name	Company	Type of Business
Karl Johnson	KFJ Energy Strategies	Energy Consultant
Francis Rubinstein	Lawrence Berkeley	Lighting Research National Labs
Judie Porter	Architectural Energy	Energy Consultant Corporation
Jim Parks	Sacramento Municipal Electric Utility	Utility District
Greg Ander	Southern California Electric	Utility Edison
Jack Melnyck	Southern California Electric	Utility Edison
George Loisos	Loisos + Ubbelohde	Energy Consultant
Bob Knight	Bevilacqua-Knight Inc.	Marketing Consultant
Bret Logue	Bevilacqua-Knight Inc.	Marketing Consultant
Terry Clark	Finelite	Lighting Manufacturer
John Kesselring		Energy Consultant
Jon Null	Watt Stopper	Controls Manufacturer
Peter Turnbull	Pacific Gas & Electric	Electric Utility
Karen Hertner	Lawrence Berkeley	Representing the CA National Labs Utility Commission
Peter Pettler	Vistron	System Developer

Appendix B: Economic Analysis for Utility and End-Use Customers

Introduction

Background and Overview

The load-shedding ballast cost-effectively reduces fluorescent lighting power requirements by a fixed percentage upon receipt of a signal during times of high electric demand of the customer or electric system without sacrificing employee productivity (see Figure 1). The purpose of the load-shed ballast is to replace existing instant-start ballasts in new fluorescent lighting fixtures used in new construction or in commercial building remodeling. The retrofit device can be installed in existing fluorescent lighting fixtures that employ standard instant-start ballasts.

Lighting Research Center is developing two distinct types of load-shedding devices:

- **Load-shed ballast:** This device comprises an instant-start ballast and circuitry—contained within the ballast housing—to reduce lamp output and power input upon receiving a signal from external sources during times of customer or utility peak electric usage. This device will primarily be used in new commercial construction and in building renovations that include replacing the lighting fixtures. It can also be used when a customer is replacing inefficient magnetic ballasts in existing lighting fixtures.
- **Retrofit load-shed device:** This device can be housed within the fluorescent light fixture and wired into the lamp circuit. Upon receipt of a signal from external sources during times of customer or utility peak electric usage, it will reduce lamp output and power input. This device will primarily be used in existing commercial buildings and with existing energy efficient electronic ballasted fluorescent lighting fixtures.

Benefits of the load-shedding ballast include the following:

- Reduces electric power requirements by dimming lamps to a predetermined level upon receiving a signal from an external controller
- Will typically reduce electrical power demands for about 100 hours per year
- Has minimal to no effect on lamp life
- Is built on an instant-start platform to allow for lowest possible cost and efficient operation
- Offers the same performance characteristics of an instant-start ballast when not in the dimming mode
- Has the same physical characteristics as an instant-start ballast
- Requires no additional wiring when replacing an instant-start ballast
- Allows the lamps to operate at their full brightness should the load-shed portion of the ballast fail
- Has received Underwriters Laboratory (UL) listing

Desirable characteristics of the load-shed retrofit device follow:

- Reduces electric power requirements by dimming lamps to a predetermined level upon receiving a signal from an external controller
- Will typically reduce electrical power demands for about 100 hours per year.
- Fits conveniently within existing fluorescent light fixtures
- Easy to install with its clip-on wiring system
- Does not disturb the performance characteristics of the fixture when not in the dimming mode
- Uses less than 0.5 watts (W) of additional power when not in the dimming mode.
- Has minimal to no effect on lamp life
- Allows the lamps to operate at their full brightness should the load-shed portion of the ballast fail
- Has received UL listing

Objectives

The purpose of this analysis is to help utilities and other organizations interested in promoting the load-shedding ballast devices better understand the economics of these devices from the customer perspective. Specifically, our analyses were designed to determine:

- Customer payback, based on product and installation costs
- Ability to meet the utility avoided cost tests
- Demand reduction potential
- Sales and demand savings volumes

For the load-shed device (and not the retrofit device), a detailed market analysis was also performed.

Approach

The economic analysis for the load-shed ballast must be examined in two ways: first, what are the economic benefits for the end use customer and second, what are the avoided costs to the utilities and society in using the load-shed ballast technology? This section explores both situations.

Customer Economic Analysis

Introduction

This analysis examines the customer cost savings if the load-shed ballast technology was applied compared to the incremental cost of the ballast or retrofit device installed as part of a new construction/renovation project or retrofitted into existing buildings. The

savings are expressed on a per light fixture/ballast basis. Firm, interruptible, and load management rates of Southern California Edison (SCE), Pacific Gas and Electric (PG&E), San Diego Gas and Electric (SDG&E), Sacramento Municipal Utility District (SMUD) and Los Angeles Department of Water and Power (LADWP) were used to determine customer cost savings.

The customer cost for the retrofit device is estimated to be $9 and the load-shed ballast has an incremental cost of $9 over the cost of an instant-start ballast. These prices include the sharing of the cost for the signaling device. The installation cost of the retrofit device or the load-shed ballast into an existing light fixture is estimated to be $10 per fixture. There is no incremental installation cost for a new light fixture with the load-shed ballast installed and used in new construction or as part of a building's renovation.

Assumptions

For purposes of this analysis, the electrical customer is assumed to have a peak electrical demand of over 1000 kilowatts (kW) and be served at secondary voltages. We assume that the transformer is owned by the distribution utility. This allows for the selection of the appropriate electrical rates.

The light fixture to be controlled is assumed to be a three lamp, T-8, electronic ballast parabolic fixture that consumes 100 W. A demand reduction using the load-shed ballast or retrofit device of 30 W is achievable.

The load-shed device or ballast will operate for 100 hours per year during the customer's monthly peak demand periods and during the summer months only as defined by each utility. For interruptible or load management rates, the load-shed ballast reduces load during the hours required by the rate. It is recognized that some of the rates used are either closed to new customers or the total requirements maybe beyond what can be achieved by reducing just the lighting load. These rates were included here to illustrate what could be achieved if the rate could be used with the load-shed ballast.

Customer Electrical Cost Savings

Customer electrical cost savings per load-shedding devices are shown for different utilities and rates in Table 1.

Table 1. Customer Electrical Cost Savings

Action	Rate	Annual savings per device
SCE		
Monthly Peak Demand Reduction	TOU-8	$3.48
Interruptible Rate	I-6-BIP	$2.52
Critical Peak Pricing Rate	TOU-8-CPP	pricing not available

PG&E		
Monthly Peak Demand Reduction	E-20S	$3.06
Interruptible Rate	E-BIP	$2.52
Demand Bidding	E-DBP	$1.05
Load Reduction	E-SLRP	$0.30
Critical Peak Pricing Rate	E-CPP	$3.96
SDG&E		
Monthly Peak Demand Reduction	AL-TOU	$3.08
Interruptible Rate	BIP	$2.52
Demand Bidding	DBP	$1.05
Load Reduction	SLRP	$0.30
Critical Peak Pricing Rate		pricing not available
SMUD		
Monthly Peak Demand Reduction	GS-TOU1	$1.51
Load Reduction	PowerNet	$0.75
LADWP		
Monthly Peak Demand Reduction	A-3, Rate C	$1.81
Real-Time Pricing	XRT	$4.17

Analysis

The focus group conducted with customers regarding load management programs and the load-shed ballast indicated the primary reason for participation is a financial reward to the customer. The cost to participate must be recouped in a reasonable period of time. For purposes of this analysis, a reasonable period of time is defined as a three year simple payback of the customer's investment in the load-shed ballast or retrofit device. It is recognized payback periods differ by type of customer and economic times.

Based on the above customer cost savings, only the load-shed ballast installed in light fixtures used in new construction or building renovations would meet the three year payback criteria. The installation cost of the retrofit device or a load-shed ballast into an existing light fixture essentially doubles the payback period to six years. While six years maybe acceptable to municipal/state type facilities, it is not acceptable to most businesses.

Rebate programs sponsored by the California Energy Commission have the ability to offset some of the initial capital cost for the purchase and installation of the load-shed ballast or the retrofit device. One program, Bring Me a Watt, will pay up to $250 per kW of peak load reduction. This is equivalent to $7.50 per load-shed ballast.

The Energy Commission has identified exposing end-use customers to real-time electric prices as a priority in controlling electric peak loads. Real time prices could increase the economic advantage of the load-shed ballast to the customer.

Utility Avoided Cost Test

Summary

The load-shed ballast and retrofit device reduce demand and do not save much energy. Therefore, the use of the standard avoided cost values as prepared and approved by the California Public Utility Commission (CPUC) that reflect only energy savings and not demand reductions is inappropriate. LRC used information developed by Working Group 2 of the *Rulemaking on Policies and Practices for Advanced Metering, Demand Response and Dynamic Pricing* in its second report to determine cost effectiveness of a demand response device such as the load-shed ballast. (This report is available through the CPUC's website.) Working Group 2's mission was to develop demand response tariffs and programs and to determine their cost effectiveness.

Based on the methodology presented in the above referenced report, The LRC found the load-shed ballast to be cost-effective under the high avoided cost case and the retrofit device to not be cost-effective under any case.

Assumptions

The demand reduction caused by the load-shed ballast or the retrofit device is assumed to be 30 W per ballast or device. This is based on a three lamp, T-8, electronic ballast light fixture with the ability to reduce power by 30%.

The incremental cost to the customer of a load-shed ballast is projected to be $9 over the cost of an instant-start ballast. No additional installation costs are included. It is assumed the ballast option would be used when purchasing a new fixture or replacing a failed ballast.

The cost to the end-use customer of the retrofit device is projected to be $9. Since the retrofit device must be installed in an existing light fixture, an installation fee of $10 per device must be added to the cost.

Review of all proposed demand reduction tariffs was conducted. For purposes of this determination, SCE's Real Time Pricing, Market Index tariff was chosen. This proposed tariff provides a reasonable payment to the customer and the proposed tariff meets most cost-effectiveness tests required by the California Public Utility Commission.

In determining avoided costs, no externality credits were included for items such as reduced emissions, land use, and postponements in transmission or distribution

construction. The amount of externality credits for demand reduction programs were not available from any resource material. The report from Working Group 2 indicated externalities would be developed as part of their Phase II efforts.

Data

All data utilized in determining cost effectiveness were derived from the first and second reports of Working Group 2 on *Dynamic Tariff and Program Proposals: Implementation Issues of Docket R.02-06-001 of the California Public Utility Commission (CPUC)*. These reports can be found on the CPUC web site.

The total resource cost test in net present value terms produces an equation:

net present value total resource cost (NPVTRC) = utility avoided costs (UAC) – program administrator costs (PRC) – net participant costs (PCN).

The avoided cost of capacity is $85/kW-year for the assumption of a new simple cycle gas turbine peaking plant and $10/kW-year for an existing peaking plant. The requirement from the CPUC was to develop two sets of avoided costs, one using the construction of a new generation unit and the second using an existing peaking generator.

The discount rate is 9%.

The evaluation horizon is fixed at 11 years.

The heat rate for a new simple cycle gas turbine is 10,000 British thermal units (Btu) per kilowatt-hour (kWh). For an existing peaking plant, the heat rate is 20,000 Btu per kWh. Fuel costs are $3.50 per million BTU. This amount is held constant for the 11 years.

SCE's Real Time Pricing Market Index proposed tariff anticipates reducing demand by 4.6 megawatts (MW) at a program cost of $449,000 during year one and $122,000 per year for the remaining 10 years.

Total Resource Cost Test

Utility avoided costs are the sum of the net present value of avoided capacity costs plus the avoided fuel costs. Two UACs that must be considered:

- A UAC that includes the construction of a new power plant, called the high avoided cost case
- A UAC that includes the operation of an existing peaking generator, called the low avoided cost case

The avoided cost and program administration costs are equivalent for the load-shed ballast and retrofit device.

Net present value of the high avoided cost case UAC is [$85/kW-yearr times 0.03 kW (demand reduction of ballast)] plus [3 kWh/year (energy saved by load-shed ballast) times 10,000 Btu/kWh divided by 1,000,000 Btu] times $3.50/mmBtu. The results must be discounted at 9% for 11 years.

=$17.35 (net present value of avoided capacity) + $0.71 (net present value of fuel savings)

NPVUAC high avoided cost case = $18.06

Net present value of the low avoided cost case UAC is [$10/kW-year times 0.03 kW (demand reduction of ballast)] plus [3 kWh/year (energy saved by load-shed ballast) times 20,000 Btu/kWh divided by 1,000,000 Btu] times $3.50/mmBtu. The results must be discounted at 9% for 11 years.

=$2.04 (net present value of avoided capacity) + $1.42 (net present value of fuel savings)

NPVUAC low avoided cost case = $3.46

The total PRC for SCE's Real Time Pricing, Market Index proposed tariff is $449,000 for the first year and $122,000 per year thereafter. The program is anticipated to reduce demand by 4.6 MW. Therefore, the net present value of the PRC, for each load-shed ballast, is:

- Year 1: [$449,000 divided by 4,600 kW (program demand reduction)] times 0.03kW/ballast = $2.93/ballast
- Years 2-11: [$122,000 divided by 4600 kW] time 0.03 kW/ballast = $0.756/ballast/year

The net present value of the PRC is $7.14 for the total 11 years at a 9% discount rate.

The participant's net cost is the incremental cost of the ballast or the retrofit device plus any incremental installation fees. Payments to the customer to reduce demand are not included in netting customer costs. The inclusion of these payments would have to be offset with a reduction in avoided costs to reflect revenue changes to the utility. These types of calculations are beyond the abilities of this study.

The PCN for the load-shed ballast is $9.

The PCN for the retrofit device is $9 (materials) + $10 (labor)

A positive net present value total resource cost indicates the technology is cost-effective for a utility to consider for its demand-response program. A negative NPVTRC says it is a better deal for the utility customers for the utility to purchase the necessary power.

Costs for the load-shed Ballast are as follows:

- NPVTRC High Avoided Cost Case = $18.06 (NPVUAC) - $7.14 (NPVPRC) - $9.00 (PCN). NPVTRC = $1.92
- NPVTRC Low Avoided Cost Case = $3.46 (NPVUAC) - $7.14 (NPVPRC) - $9.00 (PCN). NPVTRC = -$12.68

Costs for the retrofit device are as follows:

- NPVTRC High Avoided Cost Case = $18.06 (NPVUAC) - $7.14 (NPVPRC) - $19.00 (PCN). NPVTRC = -$8.08
- NPVTRC Low Avoided Cost Case = $3.46 (NPVUAC) - $7.14 (NPVPRC) - $19.00 (PCN). NPVTRC = -$22.68

The methodology used for this analysis was verified by conducting the same analysis for the whole of SCE's proposed RTP, market index tariff and comparing the results to that published in the Working Group 2's second report. The results were virtually identical.

Conclusions

- The load-shed ballast is cost-effective under the high avoided cost case.
- The retrofit device is not cost-effective under any circumstances.
- The inclusion of externalities is not expected to push the retrofit device into the cost-effectiveness realm.
- The inclusion of externalities would provide room for the utility to offer some type of rebate, if they wish, for the load-shed ballast.
- Utilities should not promote the use of the retrofit device to their customers because it does not pass the total resource cost test.

Outcomes

Product Costs and Prices

According to estimates, the cost to manufacture the load-shed ballast is $2.75 greater than the cost to manufacture the instant-start ballast. This incremental cost includes the load-shedding and communication circuitry. Using the standard rule of thumb of customer cost being three times manufacturing costs, the cost of the load-shed ballast to the customer is estimated to be $8.25 greater than the cost of an instant-start ballast.

The estimated manufacturing cost of the retrofit load-shed device is $2.75. Using the same rule of thumb as above produces a customer cost of $8.25.

Both devices will require a controller to communicate with the ballasts or retrofit device. The controller is estimated to cost the customer $100.. Each controller can communicate with all ballasts or retrofit devices located within a minimum of 10,000 square feet (ft^2) of the controller.

Customer Installation Costs

The load-shed ballast would replace the standard instant-start ballast normally found in fluorescent lighting fixtures. Because the physical dimensions and electrical connections

of the load-shed devices are identical to those of existing ballasts, installing the load-shed devices incurs no incremental costs.

It is envisioned the retrofit load-shed device can be installed by the building's maintenance staff because the device will just require clipping onto the light fixtures wires. Time required to complete installation is 15 minutes at a cost of approximately $10.00. This estimated cost was developed through discussions with an energy service company.

Effects on Non-Energy Operation and Maintenance Costs

Test to date indicate that dimming the lamps by approximately 30% for about 100 hours per year leads to slight reduction—less than 1%—of lamp life if heat is not provided to the lamp cathodes during dimming.

Demand Reduction Potential

The load-shed ballast and the retrofit device reduce demand during times of customer or utility peak electric loads. Each device will reduce demand approximately 30% of the connected fixture lighting load, generating minimal energy savings. Table 2 indicates the demand reduction based on the number of lamps per lighting fixture.

Table 2. Load-shed device demand-reduction potential

Fixture type	Ballast type	Number of lamps per fixture	Demand reduction
T-8	electronic	2	20 watts
T-8	electronic	3	30 watts
T-8	electronic	4	40 watts

Non-Energy Benefits to Customers

Research conducted at the Lighting Research Center indicates 80% of workers cannot detect a dimming condition of 20% if the dimming is performed over approximately 10 seconds. Further research showed workers accepted 30% dimming if management explained the dimming was occurring to reduce the electrical loads. A 30% dimming limit will not affect the productivity of most office workers. Current load-reduction practice in offices is to turn off a series of light fixtures, which drastically reduces productivity. In contrast, load-shed technology offers the benefit of having no impact on worker productivity.

Societal Avoided Cost Analysis for Possible Incentive Payments

Section 4 Simplified Economic Analysis t contains the full details of the developed avoided costs for the load-shed ballast and the retrofit device. The total resource cost test was used in determining the avoided costs. Information on avoided costs was developed

from the reports of Working Group 2 of the *Rulemaking on Policies and Practices for Advanced Metering, Demand Response and Dynamic Pricing* established by the California Public Utility Commission in Docket No. R.02-06-001.

The load-shed ballast meets the avoided cost test and should be pursued. However, the retrofit device for existing fluorescent lighting fixtures fails to meet the avoided costs of utilities and customers and should not be promoted by utilities. In other words, utility customers gain a greater benefit from the utility purchase of power than from use of the retrofit device.

Payback Period and Return on Investment

Customer savings for shedding lighting load either through a reduction in their monthly electric bill or participation in a utility emergency load-shedding program appears to be approximately $3.50 per year per lighting fixture. The customer's incremental cost of the load-shed ballast and its associated controller is estimated to be $9.00 per lighting fixture. This will provide a customer with a simple payback of 2.57 years. Any utility incentive will reduce the customer payback.

Customer savings for the retrofit device are the same as for the load-shed ballast at approximately $3.50 per year per lighting fixture. The device is anticipated to cost approximately $9.00 per lighting fixture. However, an installation fee of approximately $10 per lighting fixture must be added to the retrofit device. Therefore, the simple payback to a customer is 5.4 years.

Sales and Energy Savings Volumes

The primary markets for the load-shed ballast are new construction and remodeling of owner-occupied office buildings and public buildings. The annual size of these markets approaches 500,000 load-shed ballasts nationally and 40,000 ballasts in California after a five year ramp up period. The annual load reduction associated with these sales estimates is 15,000 kW nationally and 1200 kW in California.

Other substantial markets exist for the load-shed ballast but are not included as part of this document because of the difficulty or marketing costs to reach these markets. The commercial retail floor space is substantial. However, the primary business purpose of retail customers is to sell products from their stores. Dimming lights to save a minimum amount of money would not be acceptable if lost sales were encountered. Non-owner occupied office space is also substantial. However, in such cases, the question of who pays for the installation of any energy or demand saving technology and who reaps the benefits is a systemic problem that would definitely be present for the load-shed ballast.

Market Analysis

Market analysis is limited to the load-shed ballast only. The retrofit device is not considered because its avoided costs are negative.

Market Segmentation, Market Size, and Price Effects

Table 3 shows the markets for the load-shed ballast segmented into new construction and building remodeling/renovation and into owner-occupied office space and public buildings. The size of the national and California markets are developed from Energy Information Administration and census data. New construction is based on non-farm job growth (2.3% in the United States and 2.0% in California), which recognizes that people need space to work. Remodeling estimates are based on the assumption that in existing floor space light, fixture replacement occurs every 15 years for offices and every 25 years for public buildings.

Table 3. Market size

Segment	United States (million ft^2)	California (million ft^2)
New Construction		
Owner-Occupied Offices	138	18
Public Buildings	246	24
Remodeling/Renovation		
Owner-Occupied Offices	820	52.2
Public Buildings	492	42

Market Size versus Annual Sales

Annual sales are a function of market penetration. Market penetration is directly affected by the acceptance of the load-shed technology and marketing efforts. For purposes of this document, LRC has assumed penetration rates that differ by year from the date of technology introduction and by market segment. It is believed momentum and acceptance of the new technology will build over time. Also acceptance within the public building arena will be greater than within owner occupied office buildings. Table 4 presents the percentages of market penetration by year and by market segment.

Table 4. Market penetration (percent of total market)

Year	Offices	Public Buildings
1	0.1%	0.5%
2	0.5%	1.0%
3	1.0%	2.0%
4	2.0%	5.0%
5	4.0%	8.0%

Annual sales nationally and within California are estimated based on the market size and penetration as stated above and the assumption that one ballast will be used for every 200 ft^2 of floor space. Based on this information and a demand reduction of 30 watts per ballast, Table 5 provides estimates of load-shed ballast sales and demand reductions for the U.S. market and for California.

Table 5. Annual sales and demand reductions

Year	United States		California	
	Units sold	Demand reduction	Units sold	Demand reduction
1	23,240	697 kW	2,002	60 kW
2	60,890	1,827 kW	5,062	152 kW
3	121,700	3,651 kW	10,125	304 kW
4	280,300	8,409 kW	23,550	707 kW
5	487,000	14,610 kW	40,500	1,215 kW

The Buyer and Influencers

The buying decision makers are commercial building owners especially of owner-occupied and public buildings. The decision will occur normally during the building design process for new and remodeled buildings. Building occupants may also be considered buyers for the retrofit device if it meets their economic criteria.

Building designers (architects, consulting engineers, lighting designers, and other specifiers) play an important role of informing and educating building owners of the value of including load-shedding into the building's lighting scheme.

Utilities must play a key role in the dissemination of information and educating customers, building designers and developers. Based on the focus group results, utilities are the most believed and most sought out information source regarding load management issues. Therefore, it is suggested that utility sponsored seminars be conducted with lighting and building designers to introduce the technology and its benefits.

The Competition

The primary competitive product of the load-shed ballast is a lighting panel dimming control. The estimated cost of the load-shed ballast and panel dimming are comparable. With panel dimming, all lights associated with that lighting panel must dim. In contrast, the load-shed ballast will allow the customer to select which light fixtures they wish to dim.

Panel dimming, which is commercially available, is not currently experiencing any large sales volumes. The potential for reducing electrical load using these panel devices is still being explored.

Uncertainties

The load-shed device a new and different technology. It needs the support of the utility industry to be successful. The utility industry needs assurances the technology works and has a value to customers and the utility. This can be achieved through the development and evaluation of demonstration sites. Another concern is the warranty of lamps being dimmed through an instant-start ballast technology. Will lamp manufacturers invalidate their warranties? Discussions to date with the major lamp manufacturers indicate they are willing to stand behind their warranties as long as the load-shed dimming hours are limited to approximately 100 hours per year.

Consumer Choice Barriers

The primary barrier is cost-effectiveness. While the cost of the load-shed ballast may be well known, the benefits are uncertain from year to year. Each year will bring a different benefit from utilities or state-run load management programs based on the amount of curtailment necessary for that year. A customer wants and needs certainty concerning the return on investment for the load-shed ballast. Uncertainty in this area will cause many customers not to buy.

Codes and Standards

No code or standard requirements are needed for the commercialization of either the new or retrofit load-shed ballast. However, a code or standard requiring the use of a load management strategy for new buildings would enhance the marketability of the load-shed ballast. Since codes and standards are most likely to be adopted at state levels, promotion of load management strategies should be made to states, and California has the most progressive building energy code of the fifty states. Therefore, it is suggested promotion of load management strategies occur first in California by providing comments to proposed code changes. In important first step in this process is demonstrating that the technology works.

The introduction of real-time pricing could also hasten the introduction of load-management tools such as the load-shed ballast. Customers exposed to real prices would have greater economic incentive to employ load-management strategies. Many portions of the world that have undergone electric deregulation have incorporated real-time pricing. It may be easier to introduce the load-shed ballast technology in these countries.

Conclusions and Recommendations

Conclusions

As a new technology, the load-shed device needs the support of the utility industry to be successful. The utility industry needs assurances the technology works and has a value

to customers and the utility. This economic analysis provides some of the basic information utilities need; development and evaluation of demonstration sites will also aid.

Building designers (architects, consulting engineers, and lighting designers) play an important role of informing and educating building owners of the value of including load-shedding into the building's lighting scheme. Education campaigns that target these influencers are therefore important.

A potential barrier to this technology is cost-effectiveness, as the benefits from utility or state-run will change yearly based on the amount of curtailment necessary. A customer wants and needs certainty concerning the return on investment for the load-shed ballast.

No code or standard requirements are needed for the commercialization of either the new or retrofit load-shed ballast. However, a code or standard requiring the use of a load-management strategy for new buildings would enhance the marketability of the load-shed ballast. The introduction of real-time pricing could also hasten the introduction of load-management tools such as the load-shed ballast.

Recommendations

To commercialize the load-shedding ballast, LRC is partnering with a large ballast manufacturer. This manufacturer has taken the LRC's concept and is designing a load-shedding ballast product to meet the performance specifications demonstrated by the LRC prototypes. The product will be demonstrated in a field test in 2005. LRC was able to leverage Public Interest Energy Research (PIER) funding with an additional $250,000 from the New York State Energy Research and Development Authority to further develop a complete signaling system and use this system, along with the load-shedding ballasts, in a full scale demonstration and evaluation project. Additional demonstrations would be helpful to establish the value of the load-shed ballast.

A code change could help the load-shed ballast, and California has the most progressive building energy code of the 50 states. Therefore, it is suggested promotion of load management strategies occur first in California by providing comments to proposed code changes. The demonstrations recommended above would support this effort.

Customers exposed to real prices would have greater economic incentive to employ load-management strategies. Many portions of the world that have undergone electric deregulation have incorporated real-time pricing. It may be easier to introduce the load-shed ballast technology in these countries.

Benefits to California

The primary markets for the load-shed ballast are new construction and remodeling of owner-occupied office buildings and public buildings. The annual size of these markets approaches 500,000 load-shed ballasts nationally and 40,000 ballasts in California after a five year ramp up period. The annual load reduction associated with these sales estimates is 15,000 kilowatt (kW) nationally and 1200 kW in California. Because this

technology also offers the benefit of allowing employees to maintain their productivity during the load-shed event, it can become an important tool in helping regions avoid overload of the electricity system during periods of peak demand.

Glossary

Btu	British thermal unit
CPUC	California Public Utilities Commission
Energy Commission	California Energy Commission
ft^2	foot squared
kW	kilowatt
kWh	kilowatt-hour
LADWP	Los Angeles Department of Water and Power
MW	megawatt
NPC	net participant costs
NPVTRC	net present value total resource cost
PG&E	Pacific Gas and Electric Company
PIER	Public Interest Energy Research
PRC	program administrator costs
RD	research, development, and demonstration
rms	root mean squared
SCE	Southern California Edison
SDG&E	San Diego Gas and Electric Company
SMUD	Sacramento Municipal Utility District
UL	Underwriters Laboratory
UAC	utility avoided costs
W	watt

Appendix C: Power Line Communication Companies and Products

This appendix lists companies that offer power line communication products or services, particularly those involving custom chips. It includes brief descriptions of each business and their offerings, consisting primarily of text from their own websites. These descriptions do not necessarily reflect the opinions of the Lighting Research Center. Where available, addresses, phone numbers, fax numbers, URLs, and personal contacts are included.

Despite effort to make this list as complete as possible it is not exhaustive, and the dynamic nature of this field makes it impossible for any printed list to be up-to-date. Some of the companies in this list appear to have gone out of business. However, it is a record of the companies considered for lighting load-shedding projects at the LRC, and it provides a *starting-point* reference for anyone wishing to pursue research in this area. Listings are in alphabetical order.

COMPANY	BUSINESS/PRODUCTS
Adaptive Networks, Inc. (ANI) 94 Wells Avenue, Newton, MA 02459 Tel: 617-969-4050 Fax: 617-969-6898 In business 20+ years Stuart Wagonfeld, Director of Sales & Mktg.	ANI has a wide variety of chipset-based implementations to suit different applications and integration efforts. We provide products with different speeds and capabilities as well as a variety of form factors to satisfy any integration requirements. All of these products are based on the same foundation of field-proven, robust power line technology and specifically designed with ease of integration in mind. ALL products below: industrial, commercial, in-home & access, wideband SS-like, less than FCC Part 15 limits, tested up to 50km, 100 µV p-p minimum receivable signal level
Advanced Control Technologies, Inc. (ACT) 8076 Woodland Dr., Indianapolis, IN. 46278 Tel: 1-317-337-0100 Fax: 1-317-337-0200 http://www.act-solutions.com/index.htm	ACT is a leading designer and manufacturer of: • Interface controls for signal matching in building automation, HVAC and industrial process control including signal conditioners, signal rescalers and electric/pneumatic transducers. • Power line Carrier (A10 and X10) products for remote or automatic control of lighting and other electrical loads in 120, 240, 277, and 480 VAC applications for residential, commercial and industrial needs. • HomePro(RF) Radio Frequency Wireless Transmitters and Receivers for control of all types of electrical loads in commercial buildings and residences. • LonWorks Nodes - ACT is an Independent Developer and has developed a variety
Ambient Corporation Newton, MA Tel: 617-332-0004 http://www.ambientcorp.com	Technology development; PLC solutions for commercialization on Medium & Low Voltage distribution power grids; new consumer & utility applications; proprietary PLC coupler & telecommunications technology; electric distribution systems dual role as broadband pipelines Primary network layer products: S-node (at the substation); X-node (bypassing the transformer); R-node (repeater); GW-node (gateway, connection to the home); U-node (user, a lower cost GW option)
Amperion, Inc. Two Tech Drive, Andover, MA 01810 Tel: +1.978.824-2000 Fax:+1.978.650-0080	Amperion develops networking hardware and software that enables the delivery of high-speed broadband data over medium-voltage power lines.

COMPANY	BUSINESS/PRODUCTS
AnaFocus,Avd. Isaac Newton s/n, Italy Pavilion, 7th Floor, Attic, Technological Park of the Cartuja Island41092 Seville, Spain Tel: +34 954 08 12 61 Mobile: +34 655 82 18 53 Fax: +34 955 05 66 86 http://www.anafocus.com	AnaFocus is a privately held company created as a spin-off of the Microelectronics Institute of Seville (IMSE-CNM). AnaFocus is specialized in the design of innovative and high-performance analog and mixed-signal integrated circuits. * Low-cost, mixed-signal ASIC, half-duplex FSK modem, 375-450 kHz * 10-20 kbps throughput * Low power consumption: 5v @ 128 mW * Data transmission communications for control and monitoring of distribution networks (electricity, gas, water, etc.) Rafael Romay-Juárez, Business Development Director, E-Mail: romay@anafocus.com
Archnet ShenZhen, China (?) Tel: 86-755-26865137 http://www.archnetco.com	Production, R&D of PLC products - AMR, public lighting monitoring & control systems, intelligent buildings management systems, PL modems; work with system integrators to supply PLC products * 101/103: embedded PLC modem for transferring data at LV end of power transformer of 1-ph or 3-ph 4-wire network (phase to neutral) * ATI90: SS, current 50 mA idle, 300-1200 bps, 300-500 m range, ~4" x 2" x 1", 250 VAC
Ariane Controls 4913 Lionel Groulx, suite 22 St-Augustin, Quebec G3A 1V1 Canada Daniel Noiseux Tel: 418-874-1919 Fax: 418-872-4348 http://www.arianecontrols.com	Ariane Controls is a provider of Power Line Communication (PLC) products and services. As a fabless silicon vendor, we offer ASIC products that are the least expensive robust solution on the market for home, commercial, and industrial automation applications. Our products include a power line modem chip, reference platforms, and PC-based development software that simplify application prototyping. We provide engineering services to power utilities and building automation integrators. Our partners include Microsoft, Oki Semiconductor, Continental Automated Buildings Association (CABA), Consumer Electronics Association (CEA), and Conseil québécois de la domotique (CQD; Quebec Council of House Automation). Ariane Controls is continuously working to improve its current chip and IP portfolio, keeping up to date with the best practices and adding new features. We currently offer power line modem chips, reference designs to help you get your projects up and running quickly, and application examples. The Ariane Controls team is market driven; we are continually adding features that are requested by customers like you. Ariane Controls also develops customer-specific products to fit your needs.
Ascom Management AG Belpstrasse 37, CH-3000 Berne 14 Switzerland	Ascom is an international provider of services for telecommunications systems, integrated voice and data communications, wireless and corded security solutions and networked revenue collection systems.

COMPANY	BUSINESS/PRODUCTS
Tel: +41 31 999 11 11 http://www.ascom.com	
Cepco Products 9540 Owensmouth Ave. Chatsworth, CA 91311 Paul Belcher Tel: 818- 998-8569 http://www.cepcoproducts.com	CEPCO Power Line Carrier Systems are as reliable as direct wire, with plug-in flexibility, and at a fraction of the cost. We can provide Power line Carrier Controls for such OEM and custom applications as: • Energy management system for hotels, motels, schools, churches and commercial buildings • Remote control of swimming Pools and Spas, clocks for synchronization, electric utility meter reading, and industrial signaling devices CEPCO Power Line Carrier offers unique solutions to these problems using Zero Crossing Digital Pulse Modulation and Consecutive Pulse count Coding technologies that are covered by United States, British, and Canadian Patents, with other patents pending.
Cogency Canada http://www.cogency.com	Cogency's power line integrated circuits are an inexpensive, scalable, robust, and high performance solution for creating products with home networking capabilities. The orthogonal frequency-division multiplexing (OFDM) technology used by Cogency addresses the challenges presented by using AC power lines as a vehicle for data communications. Cogency's OFDM-based semiconductors are also compatible with the HomePlug Power line specification. Cogency uses OFDM in the 4.5 to 21 MHz band and a sophisticated forward error correction scheme to provide reliable data transmission.
Current Technologies 12800 Middlebrook Road Germantown, MD 20874 http://www.currenttechnologies.com	Current Technologies™ is the industry leading provider of Broadband over Power Line (BPL) solutions. Founded in July 2000, it is a privately held company based in Germantown, Maryland that is focused on building and delivering innovative BPL equipment and networks. Current Technologies' equipment is overlaid on the electric distribution network to offer high speed broadband services. Current Technologies' BPL network also enables utilities to offer new, enhanced power distribution services such as automated meter reading, automatic outage detection, and demand side management. Current Technologies solution is being deployed commercially to Cinergy's 1.5 million customers in Ohio, Indiana and Kentucky, following 14 months of trials, during which the network's robust performance and reliability produced high customer satisfaction and a strong interest in enrolling in the commercial service. A successful smaller scale trial has also been in operation in Maryland with Pepco since late 2002. Current Technologies is one of the first companies to deploy a safe, commercially viable solution that transforms an electric distribution network into a broadband communications platform, solving the problems historically associated with transmitting at high bandwidth across power lines. The Current TechnologiesTM BPL system is capable of providing multi-

COMPANY	BUSINESS/PRODUCTS
	megabit speeds for residential and commercial Internet users leveraging the HomePlug® power line modem standard. In addition to traditional data services, the system also supports Internet telephony, gaming, and digital quality video streaming. BPL is "always on" at every outlet in the home or business without the need for re-wiring.
Cyplex Tel: 02 9482-4269 Fax: 02 9482-4222 http://www.cyplex.com.au Need password to access technical data	Fast, reliable packetised data communications over any wire. Designed to complement Packetiser, Automatic Meter Reading (AMR) solutions or for industrial, mining and home automation applications. At the heart of every intelligent Freeloader module is the Cyplex IC/SS, used in some of the world's largest automatic meter reading applications and in some of the toughest electrical environments found in underground mining. Freeloader turns the power lines in your street or office into a communications network suitable for monitoring and remotely controlling equipment appliances and linking smart devices. Although specifically designed for large-scale power utility meter reading and load control applications, Freeloader is flexible enough to suit almost any remote and monitoring task.
Domosys Corporation Head Office 585 Charest blvd E., 6th floor Quebec, (Quebec), G1K 3J2, Canada Tel: +1 (418) 681-8022 Fax: +1 (418) 681-8015 http://www.domosys.com/home/	Founded in 1994, Domosys Corporation is a leading provider of power line control networking technology to the residential, utility, transportation and commercial markets. Target devices include switches, meters, white goods, relays, displays, controls and other electrical products, and are found by the billions worldwide. The company designs and markets a complete portfolio of products and services required by Original Equipment Manufacturers (“OEMs”) and system integrators to successfully develop and deploy control networks. The Domosys PowerBus™ technology transforms any stand-alone product into a device that can be controlled and monitored either locally (via power line, twisted pair or Ethernet) or remotely (via dial-up or over the Internet.) Domosys is a private corporation, and has received funding from many leading firms, including SGF, Hydro-Quebec, CIBC, and Cadence Design Systems. Our offices and laboratories are located in downtown Quebec City, the capital of the province of Québec and Canada’s oldest city.
DS2 Technology Park, Paterna, Valencia (Spain) Established 1998; 60 employees http://www.ds2.es	Silicon design house focused on development of Power line Applications Specific Standard Products (ASSP); provide utilities access to PLC-based last-mile technology & consumers low-cost LANs.DS2 is the world leader in the development of high performance, low cost, PLC technology. Our objective is to become the leader in the supply of silicon components that provide electricity utilities access to PLC-based 'last mile' technology and consumers low cost LANs without the need for extra wiring.
Echelon Corporation 550 Meridian Avenue, San Jose, CA 95126	Echelon device networking technology enables end-users to remotely connect, monitor, control, sense, and diagnose intelligent devices. Today, thousands of intelligent devices and appliances are equipped with LonWorks networks. You can

COMPANY	BUSINESS/PRODUCTS
Tel: +1-408-938-5200 +1-888-ECHELON Fax: +1-408-790-3800 http://www.echelon.com	find them in every aspect of the device networking environment—from HVAC and lighting in buildings, to collecting energy usage information or data across a grid of 27 million homes—24 hours a day. PL3120 and PL3150 introduced in 2003 1-chip + Coupling + Amp + Power Supply < $10 (chips only); substantial high volume discounts; developed with STM; Requires about 50 support components (mostly R's and C's)
Enikia 948 US Highway 22, N. Plainfield, NJ 07060 Tel: 908-412-0701 http://www.enikia.com	Enikia's standards-based, highly integrated power line solutions support audio, video, voice and data over the existing power line infrastructure. Enikia's reference designs for next-generation home-networking products incorporate full functionality in cost-effective solutions, and are intended to get products to market quickly. Enikia's solutions support a rapid development environment through robust support of industry-standard Operating Systems and APIs, as well as comprehensive design documentation, software, training, and certification assistance. Enikia is working closely with today's industry leaders to create tomorrow's global Home Networking Power line standards. Enikia is a founding member of the HomePlug Power line Alliance. While displaying QoS and other important features for home networks, the Enikia Power Bridge offers the ability to productize, characterize, and analyze power line technology. [Other than Power Bridge, I could not get any chip information from their website.]
Fujian Cangshan District, Fuzhou, Fujian Province, China Tel: 0591-3042439 Fax: 0591-3576510 http://www.fjeptri.com.cn	Power Line Communication modem and adapter are products developed by Fujian Electric Power Test & Research Institute with innovative technology. Person to contact: wangdongfan; E-mail:wanglin@public.fz.fj.cn
Ilevo AB Box 1561, SE-651 21 Karlstad, Sweden http://www.ilevo.com	Ilevo PLC equipment enables utilities to increase the value of their existing infrastructure. Ilevo has designed a system that fits easily into the existing power line topology and integrates into the backbone infrastructure.
IntraCoastal System Engineering Corporation Vancouver, Canada www.intracoastal.net (URL for sale)	PTSC (Patriot Scientific Corp.), which develops and markets microprocessors for embedded applications, has formed an alliance with IntraCoastal System Engineering Corporation of Vancouver, Canada, which develops and markets advanced Power Line Communications (PLC) and Automated Meter Reading (AMR) technologies, to jointly develop energy management solutions based on the OSGi(TM) framework. The new alliance will first target the energy management market and will initially develop applications demonstrating demand management and load shedding due to the immediacy of problems related to high costs of electricity production and natural gas availability. "To be usable and deployable, the costs of communicating to controlled devices have to be at a low enough price point for consumers to purchase

COMPANY	BUSINESS/PRODUCTS
	in quantity. Our very low cost, robust PLC3 accomplishes all these goals today," commented Vid Wadhwani, Chairman of IntraCoastal. IntraCoastal System Engineering Corporation has a line of proprietary and patented Power Line Communication products. One application of this technology is in the field of telemetry for Automated Meter Reading (AMR) and two commercial installations are underway in China and Vietnam. Another application is in the area of Home Networking and a two-way PLC license has been signed with Domosys Corporation. The company's shares are listed as ISY on the Canadian Venture Exchange (CDNX). For additional information please contact William Ng.
Itran 9 Yehoshua Hatzoref St. Beer Sheva 84106, ISRAEL http://www.itrancomm.com	The IT800 is a Family of Highly Reliable Power Line Communications Command and Control ICs (up to 7.5Kbps) Power Line Communications ICs
Itron http://www.itron.com	With more than 2,000 clients worldwide, Itron Inc. is the leading global solutions provider and source of knowledge for collecting, analyzing and applying electric, gas and water usage data. Meter modules - radio & telephone based
Inari http://www.inari.com	Could not access Inari website
Intellon Fabless semi company Tel: 408-501-0322 http://www.intellon.com	INT5200 integrates HomePlug 1.0 physical layer (PHY), Media Access Control (MAC), 3 host interfaces (MII, Ethernet, USB1.1), Complete analog front end with receive/transmit amps; All CMOS INT5200 announced 12/02/03 - for HomePlug; < $10 total add-in cost
Main.net 14 Hataas St., P.O.B 2324, Kfar Saba 44641, ISRAEL http://www.mainnet-plc.com	Main.net Communications Ltd. is the market leader in power line communications (PLC) access network solutions worldwide.
Metricom Corp. Beauport (Quebec) Canada http://www.metricom-corp.com **NO LONGER IN BUSINESS**	Bought out; see listing for Ariane Controls Sells a complete FSK 28-pin chip ($2.25-$3.75); must license technology; can customize chip; < 1/2" square; 85C industrial version; half-duplex; FPGA-implemented (22,000 gates) PLC-1 CMOS digital ASIC PLC transceiver; 50-500 kHz carrier; FSK; 100-30 kbps; protocol neutral; error correction
Michat Electronique Eric Michat	Multi Purpose Power Line Micro-Module - Key benefits: • Small size: 53x19mm for space saving (SMD on both sides) • Fully insulated coupling network 1500Vrms / Includes all protection devices • Easy to use 2-wire DATAIN/DATAOUT TTL interface

COMPANY	BUSINESS/PRODUCTS
Le Chateau 26350 Miribel, France www.michat.com	• TTL/CMOS Clock output for any microcontroller • Single +5V/100mA power supply / Fc=115.2KHz • 70dBuV input sensitivity - 120dBuV Output signal meets EN50065-1 • Operates on AC 0 to 230Vrms / DC 0 to 300V power lines • Available in two versions: module alone with datasheet or kit of two modules with a complete application CDROM PM V2 - Long Range Module for Industrial Applications: This module is dedicated to the evaluation of long-range or industrial power line communication purposes. It features an extended output power (up to 1W @2W) and an improved input stage that can provide a 60dB TX/RX dynamic range. It can be connected to any TTL serial port by means of a simple TXD/RXD interface. • Carrier frequency (+/- 30ppm) 115.2 KHz • Output Voltage (Selectable with jumpers) 120 / 130 dBµV • Input Sensitivity 70 dBµV • Maximum Output Power @ 2 Ohms 1 W • Typical Output Impedance (TX mode) < 2 Ohms • Typical Input Impedance (RX mode) > 50 Ohms • Power Supply Requirements 15 VDC / 500 mA • Maximum Baud Rate 1200 Bauds • Maximum Power Line Voltage 240 VAC / 300 VDC
MPS 63 "Shipchenski prohod" 1574 Sofia, Bulgaria Tel: (+359 2) 973 38 36 (+359 2) 971 23 24 (+359 2) 973 35 42 (+359 2) 70 20 96 http://www.mps.bg	Half duplex Frequency Shift Key (FSK) modem for power line communication network applications. Multiprocessor Systems Ltd. is a private computer company dedicated in the field of high-performance computations. The company was founded in 1990 by 22 computer scientists and designers from the former Bulgarian Central Institute for Computer Technique and Technology, which existed more than 30 years. • Two Programmable Channels for 600, 1200 or 2400 bps • Automatically Tuned Rx and Tx Filters • Tx Carrier Frequencies Synthesized from External Crystal • Low Distortion Tx Signal (S/H2 > 50dB) • Automatic Level Control on Tx Signal • Rx Sensitivity: - 2 mV RMS (600 bps) ; - 3 mV RMS (1200 bps) ; - 4 mV RMS (2400 bps) • Rx Clock Recovery; Power Down Mode • Suitable to application according to CENELEC EN500065-1 and FCC Safety Standards Specifications
nSine Communications Ltd. Berkshire, UK Tel: +44 (0) 118 902 6855 http://www.nsine.com	Home Networking solutions – 10 Mbps for $3; Reference designs for appliances & residential GW; ASIC architecture; <100K gates; nCode baseband protocol & Network Conn. Protocol; nPlug technology: 2-chip set (mixed signal PHY ASIC + digital MAC ASIC for baseband protocols) + coupler First phase: “Major adopters” to validate/endorse; Development Starter Kit: $5000

COMPANY	BUSINESS/PRODUCTS
PCS Power line Control Systems Northridge, CA Tel: (818) 701-9831 http://www.pcslighting.com	Founded in 1992, PCS has been successfully developing and manufacturing reliable, high-quality lighting controls for the residential and commercial markets. PCS products are designed to use standard power lines to communicate control signals without additional wiring. • PCS has developed UPB™ power line communication technology which raises the reliability of power line control to a new level. Potential applications for this technology include lighting, appliance, heating and cooling systems, and web-to-device interfacing. • PCS has been awarded the Home Automation and Networking Association Product of the Year (1999), as well as being chosen as a Top 50 Editor's Pick in 1998 (Lighting Control Module), 1999 (Multi-Module), and 2000 (Fluorescent Smartswitch) by CEPro magazine. PCS developed the Universal Power line Bus (UPB) communication method of reliably communicating command, control, and status information across an electrical 60Hz AC power line. Some products: • The WS1D Wall Switch Dimmer is a wall mounted dimming light switch capable of controlling the light level of a single 600W, 1000W, or 2000W channel 120VAC lighting load. • UPB 6-Button Controller is a pushbutton device capable of transmitting Universal Power line Bus™ (UPB) Commands onto the 120VAC power line. • UPB 6-Button Controller is a pushbutton device capable of transmitting Universal Power line Bus™ (UPB) Commands onto the 120VAC power line. • PCS Power line Interface Module (PIM).
Plugtek http://www.plugtek.com	Links to power line companies; PLC information Small subscription fee
PolyTrax Munich, Germany http://www.polytrax.com	Distributes & sells technology to OEMs & system integrators – home networking, telecommunications, data transfer, industrial automation OFDM-QAM; 155 kb/sec (Europe); 2.5 Mb/sec (U.S.) ASSOS (Application Specific Software on Silicon); PTX2 ASSOS PLC transceiver for packet-oriented data transfer for home applications in Europe; PTX3 ASSOS PLC transceiver for packet-oriented data transfer for home applications in U.S.; ASOP (Application Specific OEM Products)
Power line Publishing United Kingdom http://www.power linepublishing.com	Power line Publishing works closely with key players in the Power line Telecommunications Industry to bring you the latest information on this emerging technology. 2003 Update on the Power line Industry is the second Power line Industry overview to be authored by Dr. Peter Krawarik, Systems Physics Consultants. The product provides a fast track resource to vital information to the continuing developments in the Power line community, from a uniquely independent and global perspective. Price: £200.00 plus VAT where applicable. (Approx. US $310) • Industry Overview • Technological Developments

COMPANY	BUSINESS/PRODUCTS
	• Regulatory Developments • Market Developments • 2003 and beyond • PLC Technology Developers, World-wide • The PLC Community
Power-Linx http://www.power-linx.com/entry.php	Home Networking - "Coming soon" SecureView™: The "camera in a light bulb" simply screws into any light socket. Inside the "bulb" is a sophisticated low-light monochrome camera coupled to exclusive IRFS™ circuitry. This circuit "encodes" the video and feeds it directly to the power line. Each camera has a companion "decoder" which plugs into any wall outlet. A standard video cable connects the decoder to any TV or VCR. It's simple and easy. There are no wires to run, no holes to drill, and no antennas or complicated "tuning" is required.
Sainco, Tamarguillo, 29 41006 - Sevilla, Spain Contact: Antonio Hidalgo Project Manager Tel: +34 95 492 09 92 Fax: +34 95 49239 21 antonio.hidalgo@sainco.abengoa.com (not valid)	* Single-chip for power line high-speed communication in SOHO and in-home environments * Mixed signal ASIC transceiver in 0.35 um CMOS technology with complex I/Q Analogue Front-End & Baseband Processor based on OFDM modulation * Useful OFDM signal bandwidth can be allocated at any center frequency over the whole frequency range (1 to 30 MHz) thanks to the analog front-end design approach * Up to 12.6 Mbps raw data rate over power line
ST Microelectronics 39, Chemin du Champ des Filles C. P. 21 CH 1228 Plan-Les-Ouates GENEVA, Switzerland Tel: +41 22 929 29 29 Fax: +41 22 929 29 00 http://www.st.com/stonline/books/ascii/docs/9324.htm	ST7538 Power Line FSK Transceiver: • Half duplex FSK transceiver • Integrated power line driver with programmable voltage and current control • Programmable interface: synchronous, asynchronous • Single supply voltage (from 7.5 to 12.5 V) • Very low power consumption (Iq = 5 mA) • 8 programmable transmission frequencies • Programmable baud rate up to 4800 bps • Receiving sensitivity 1 mVRMS
Xeline 7F, Chungjin Bldg., 475-22 Bangbae 2 dong Seocho-gu, Seoul 137-819, Korea Tel: +82 2 598-0980 Fax: +82 2 598-0975 http://www.xeline.com/english	As the world's pioneer and leader in PLC technology, Xeline delivers advanced, intelligent, and unique PLC chipsets and last-mile solutions that have been verified in various sites all over the world. Now Xeline is bringing PLC products to the market after successfully completing development of ASIC chipsets, modules, and modems for PLC Internet access systems. XPAS-100A PLC Internet Access System for Low V. Networks XPLC21 Broadband PLC Chipset based on Xup™ Technology Xeline's XPLC21 is a high performance power line communication chip that supports

COMPANY	BUSINESS/PRODUCTS
	both broadband access and home networking through the existing LV (Low Voltage) and MV (Medium Voltage) power grids.

Appendix D: Circuit Schematic and Bill of Material for Load-Shedding Add-on Prototype

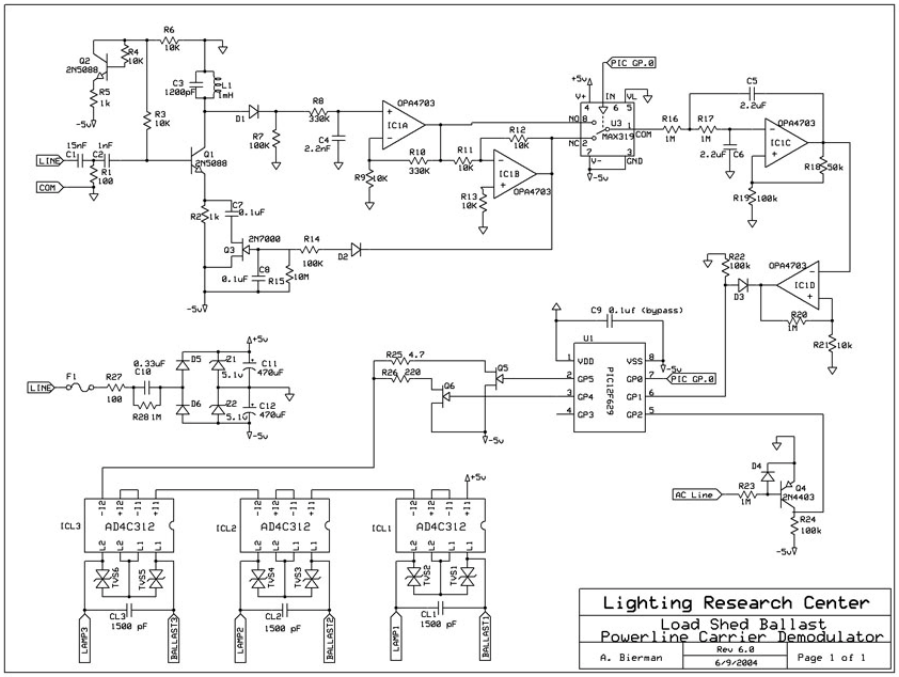

PLC Receiver

Sch. I.D.	Value	Comments	Digikey part #	Price qty <10	Price qty= 1000	Removing Digikey profit, quant. = 1M
C1	15nF	Type X2 capacitor, 275 V	BC1604-ND	0.41	0.1761	0.08805
C2	1nF	ceramic, 250 V	PCC102BNCT-ND	0.054	0.01888	0.01
C3	1200pF	ceramic, 5%, 50 V	PCC2155CT-ND	0.16	0.05576	0.03
C4	2.2nF	ceramic, 25 V	PCC1987CT-ND	0.066	0.0272	0.01
C5	2.2uF	ceramic, 16 V	PCC2322CT-ND	0.161	0.06179	0.02
C6	2.2uF	ceramic, 16 V	PCC2322CT-ND	0.161	0.06179	0.02
C7	0.1uF	ceramic, 16 V	PCC2322CT-ND	0.161	0.06179	0.02
C8	0.1uF	ceramic, 16 V	PCC2322CT-ND	0.161	0.06179	0.02
C9	0.1uf	bypass cap	PCC1828CT-ND	0.062	0.02298	0.01
D1		type 1N914 or equivalent	MMBD914FSCT-ND	0.19	0.0432	0.01
D2		type 1N914 or equivalent	MMBD914FSCT-ND	0.19	0.0432	0.01
D3		type 1N914 or equivalent	MMBD914FSCT-ND	0.19	0.0432	0.01
D4		type 1N914 or equivalent	MMBD914FSCT-ND	0.19	0.0432	0.01
IC1A	LM324A	Quad opamp	296-9543-2-ND	0.45	0.133	0.07
IC1B	LM324A	Quad opamp				
IC1C	LM324A	Quad opamp				
IC1D	LM324A	Quad opamp				
L1	1mH	fixed inductor, ferrite core, 5%	TK4312-ND	2.04	0.548	0.1
Q1	2N5088	sot23 type 5088 high gain NPN	MMBT5088CT-ND	0.19	0.0432	0.02
Q2	2N5088	sot23 type 5088 high gain NPN	MMBT5088CT-ND	0.19	0.0432	0.02
Q3	2N7002	sot23 type 2N7000 MOSFET	2N7002NCT-ND	0.25	0.055	0.02

Sch. I.D.	Value	Comments	Digikey part #	Price qty <10	Price qty= 1000	Removing Digikey profit, quant. = 1M
Q4	2N4403	sot23 equivalent to a 2N4003	MMBT4403FSCT-ND	0.2	0.0459	0.02
R1	100	1/4 watt thru-hole for safety	CFR-25JR-100R	0.056	0.00894	0.004
R2	1K	type 0805, 5%	9C08052A1001JLHFT	0.076	0.0045	0.003
R3	10K	type 0805, 5%		0.076	0.0045	0.003
R4	10K	type 0805, 5%		0.076	0.0045	0.003
R5	1K	type 0805, 5%		0.076	0.0045	0.003
R6	10K	type 0805, 5%		0.076	0.0045	0.003
R7	100K	type 0805, 5%		0.076	0.0045	0.003
R8	330K	type 0805, 5%		0.076	0.0045	0.003
R9	10K	type 0805, 5%		0.076	0.0045	0.003
R10	330K	type 0805, 5%		0.076	0.0045	0.003
R11	10K	type 0805, 5%		0.076	0.0045	0.003
R12	10K	type 0805, 5%		0.076	0.0045	0.003
R13	10K	type 0805, 5%		0.076	0.0045	0.003
R14	100K	type 0805, 5%		0.076	0.0045	0.003
R15	10M	type 0805, 5%		0.076	0.0045	0.003
R16	1M	type 0805, 5%		0.076	0.0045	0.003
R17	1M	type 0805, 5%		0.076	0.0045	0.003
R18	50k	type 0805, 5%		0.076	0.0045	0.003
R19	100K	type 0805, 5%		0.076	0.0045	0.003
R20	1M	type 0805, 5%		0.076	0.0045	0.003
R21	10K	type 0805, 5%		0.076	0.0045	0.003
R22	100K	type 0805, 5%		0.076	0.0045	0.003
R23	1M	1/4 watt thru-hole for safety	CFR-25JR-100R	0.056	0.00894	0.004
R24	100K	type 0805, 5%		0.076	0.0045	0.003
R25	4.7	type 0805, 5%		0.076	0.0045	0.003
R26	220	type 0805, 5%		0.076	0.0045	0.003
U1	PIC12F629	MCU CMOS 8BIT 1K FLASH 8-SOIC	PIC12F629-I/SNTR-ND	1.68	1.08	0.54
U3	2:1 Mux	CMOS analog switch, 10 V	MAX4544CSA-ND	1.56	0.6903	0.34515
			Total	10.65	3.49	1.48

Power Supply

Sch. I.D.	Value	Comments	Digikey part #	Price qty <10	Price qty= 1000	Removing Digikey profit, quant. = 1M
C10	0.47uF	Type X2 capacitor, 275 V	BC1617-ND	0.96	0.41355	0.206775
R27	100	1/4 watt thru-hole for safety?	CFR-25JR-100R	0.056	0.00894	0.004
F1		a thin trace		0	0	0
R28	1M	1/4 watt thru-hole for safety?	CFR-25JR-1M0	0.056	0.00894	0.004
D5		type 1N2004 or equivalent	1N4004GICT-ND	0.04	0.024	0.01
D6		type 1N2004 or equivalent	1N4004GICT-ND	0.04	0.024	0.01
Z1	5.1v	Zener diode	BZX84C5V1FSTR-ND		0.0298	0.015
Z2	5.1v	Zener diode	BZX84C5V1FSTR-ND		0.0298	0.015
C11	470uF	electrolytic, 16 V	PCE3215CT-ND	0.562	0.3969	0.1
C12	470uF	electrolytic, 16 V	PCE3215CT-ND	0.562	0.3969	0.1

Sch. I.D.	Value	Comments	Digikey part #	Price qty <10	Price qty= 1000	Removing Digikey profit, quant. = 1M
			Total	2.277	1.33	0.46

Lamp Dimming Circuit

Q5	NDS355N	sot23, Rds = 0.125 ohms	NDS355NCT-ND	0.59	0.19684	0.1
Q6	NDS355N	sot23, Rds = 0.125 ohms	NDS355NCT-ND	0.59	0.19684	0.1
R25	4.7	type 0805, 5%		0.076	0.0045	0.003
R26	220	type 0805, 5%		0.076	0.0045	0.003
ICL1	AD4C312	Opto-MOSFET SSR			3.5	2.77
ICL2	AD4C312	Opto-MOSFET SSR			3.5	2.77
ICL3	AD4C312	Opto-MOSFET SSR			3.5	2.77
TVS1		TVS 400W 350V BI-DIR DO-204AL	P4KE350CA-ND		0.2316	0.1158
TVS2		TVS 400W 350V BI-DIR DO-204AL	P4KE350CA-ND		0.2316	0.1158
TVS3		TVS 400W 350V BI-DIR DO-204AL	P4KE350CA-ND		0.2316	0.1158
TVS4		TVS 400W 350V BI-DIR DO-204AL	P4KE350CA-ND		0.2316	0.1158
TVS5		TVS 400W 350V BI-DIR DO-204AL	P4KE350CA-ND		0.2316	0.1158
TVS6		TVS 400W 350V BI-DIR DO-204AL	P4KE350CA-ND		0.2316	0.1158
CL1	1500 pF	ceramic, 1 kV	P4130-ND	0.371	0.1484	0.07
CL2	1500 pF	ceramic, 1 kV	P4130-ND	0.371	0.1484	0.07
CL3	1500 pF	ceramic, 1 kV	P4130-ND	0.371	0.1484	0.07
			Total	2.45	12.74	9.42

Appendix E: Circuit Schematic and Bill of Material for Superheterodyne, Radio-based, Add-on, Load-Shedding Prototype

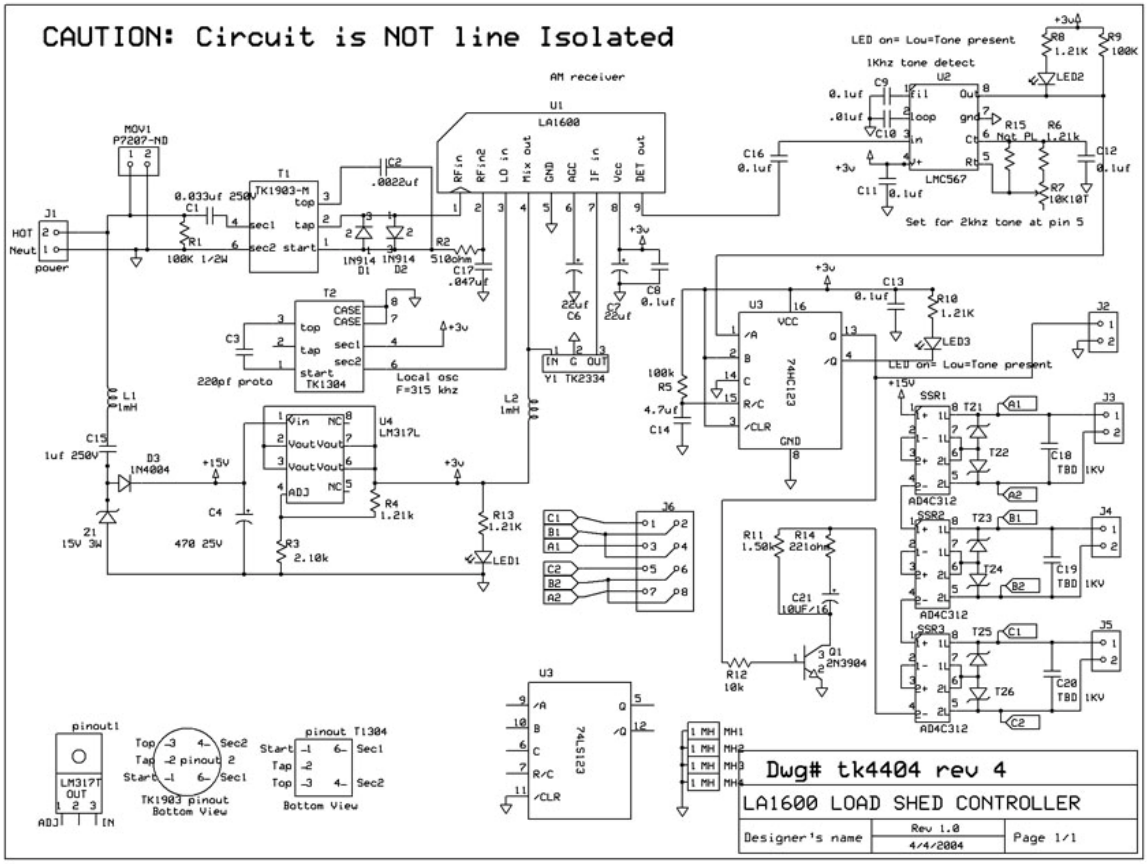

Schematic I.D.	Value	Digikey part # (unless noted)	Comments
C1	0.033uf 250V	BC1612	box X2
C2	.0022uf	PCC1776CT-ND	0603
C3	220pf proto	PCC221ACVCT-ND	0603
C4	470 25V	PCE3221CT-ND	SM ELECTROLYTIC
C6	22uf	PCE3026CT-ND	SM ELECTROLYTIC
C7	22uf	PCE3026CT-ND	SM ELECTROLYTIC
C8	0.1uf	PCC1762CT-ND	0603
C9	0.1uf	PCC1762CT-ND	0603
C10	.01uf	PCC1750CT-ND	0603
C11	0.1uf	PCC1762CT-ND	0603
C12	0.1uf	PCC1762CT-ND	0603
C13	0.1uf	PCC1762CT-ND	0603
C14	4.7uf	PCC2318CT-ND	0603
C15	1uf 250V	BC1602	box X2
C16	0.1uf	PCC1762CT-ND	0603
C17	.047uf	PCC2286CT-ND	0603
C18	1500pf 1KV	Socketed in socket strip	P4130-ND
C19	1500pf 1KV	Socketed in socket strip	P4130-ND
C20	1500pf 1KV	Socketed in socket strip	P4130-ND
C21	10UF/16	PCE3031CT-ND	SM ELECTROLYTIC

Schematic I.D.	Value	Digikey part # (unless noted)	Comments
D1	1N914	MMBD914FSCT-ND	sot 23
D2	1N914	MMBD914FSCT-ND	sot 23
D3	1N4004	1N4004GICT-ND	thru hole
L1	1mH	mouser 580-17105	thru hole
L2	1mH	mouser 580-17105	thru hole
LED1		160-1412-1-ND	0805
LED2		160-1412-1-ND	0805
LED3		160-1412-1-ND	0805
MOV1	P7207-ND	P7207-ND	Thru hole
Q1	2N3904	MMBT3904FSCT-ND	sot 23
R1	100K 1/2W	TROJAN	Thru hole
R2	511ohm	P511HCT-ND	0603
R3	2.10k	P2.10KHCT-ND	0603
R4	1.21k	P1.12KHCT-ND	0603
R5	100k	P100KHCT-ND	0603
R6	1.21k	P1.12KHCT-ND	0603
R7	10K10T	TROJAN 3296W-103-ND	thru hole
R8	1.21K	P1.12KHCT-ND	0603
R9	100K	P100KHCT-ND	0603
R10	1.21K	P1.12KHCT-ND	0603
R11	1.50k	P1.50KHCT-ND	0603
R12	10k	P10.0KHCT-ND	0603
R13	1.21K	P1.12KHCT-ND	0603
R14	221ohm	P221HCT-ND	0603
R15	Not PL	NOT PLACED	0603
SSR1	AD4C312	AD4C312, SOCKETED	8pin dip
SSR2	AD4C312	AD4C312, SOCKETED	8pin dip
SSR3	AD4C312	AD4C312, SOCKETED	8pin dip
T1	TK1903-M	TK1903-M-ND	can
T2	TK1304	TK-1304-ND	can
TZ1	P4KE350CA	Vishay P4KE350CA	thru hole
TZ2	P4KE350CA	Vishay P4KE350CA	thru hole
TZ3	P4KE350CA	Vishay P4KE350CA	thru hole
TZ4	P4KE350CA	Vishay P4KE350CA	thru hole
TZ5	P4KE350CA	Vishay P4KE350CA	thru hole
TZ6	P4KE350CA	Vishay P4KE350CA	thru hole
U1	LA1600	FM SANYO	9 pin sip
U2	LMC567	LMC567CM-ND	soic 8
U3	74LS123	MM74HC123AM-ND	soic 16
U4	LM317L	LM317LM-ND	soic 8
Y1	TK2334	TK2334-ND	Thru hole
Z1	15V 3W	1N5929BRLOSCT-ND	Thru hole

Appendix F: PLC Signal Reception Testing

PLC test results, Synchronous Detection System, LRC Building, 4th Floor

Date of tests: 09/03/04 & 09/08/04

OUTLET LOCATION	CKT	PHASE	WORK?	COMMENTS
Old student area, southwest wall	P4C-1	BLK	YES	
Mechanical room & water cooler	P4C-2	BLK	**XMTR**	
Old student area, north wall, middle	P4C-7	BLK	YES	
SCFL room, west wall	P4C-8	BLK	YES	
Toaster & hot water	P4C-13	BLK	YES	
Terry's office	P4C-14	BLK	YES	2 C/M's* on circuit
Student computers	P4C-19	BLK	YES	
Corridor near conference room	P4C-20	BLK	YES	Sharp copier, LJ4+ printer on ckt
——-	P4C-25	BLK	n/a	n/c
White Lab - test room	P4C-26	BLK	YES	
——-	P4C-31	BLK	n/a	Exhaust fan roof
——-	P4C-32	BLK	n/a	n/c
Old student area, north & east walls	P4C-3	RED	YES	Did not unplug any of 4 C/M's*
——-	P4C-4	RED	n/a	n/c
Old student area, southeast wall	P4C-9	RED	YES	
SCFL room, east & south walls	P4C-10	RED	YES	
Microwave	P4C-15	RED	YES	
Benches/tables near windows	P4C-16	RED	YES	
——-	P4C-21	RED	n/a	n/c
White Lab - east & south walls	P4C-22	RED	YES	
White Lab - north wall	P4C-27	RED	n/a	2-phase plug
——-	P4C-28	RED	n/a	n/c
SCFL room, on roof	P4C-33	RED	n/a	RTU-1 on roof
——-	P4C-34	RED	n/a	n/c
Old student area, west	P4C-5	BLU	YES	
SCFL room, near power regulator	P4C-6	BLU	YES	UPS & 2 C/M's* on circuit
Refrigerator	P4C-11	BLU	YES	
Rich's office	P4C-12	BLU	YES	Surge protector on this circuit
Kitchenette	P4C-17	BLU	YES	HP LaserJet & refrigerator OK on ckt
Conference room	P4C-18	BLU	YES	
White Lab - south wall	P4C-23	BLU	n/a	2-phase plug
White Lab - 2nd row	P4C-24	BLU	YES	
——-	P4C-29	BLU	n/a	n/c
——-	P4C-30	BLU	n/a	3-phase plug

Two phase-couplers were used (CB panel & plug-in in black lab)

In order to "work", the receiver had to dim at least once and undim at least once.

These tests were initially performed with the black box transmitter gain set to 8.08 v p-p.

Repeated tests on 9/8/04, after transmitter gain adjusted to 6.00 v p-p; performance was identical.

* C/M's = Computer/Monitors

PLC test results, Synchronous Detection System, LRC Building, 1st, 2nd, 3rd Floors

Date of tests: 09/03/04 & 09/08/04

OUTLET LOCATION	CKT/PH	WORK?	WORK?	COMMENTS
		9/3	9/8	
Mechanical room & water cooler	P4C-2	XMTR	XMTR	9/3: 8.0 v p-p; 9/9: 6.0 v p-p
3rd Floor				
Outside Lenda Lyman's office	Unknown	NO	NO	
Hallway near Lenda Lyman's office	Unknown	YES	NO	
Coffee pot	Unknown	YES	NO	
Seminar room	Unknown	YES	YES	
Communications room	Unknown	YES	YES	
Outside John's office	Unknown	YES	YES	
Meeting area	Unknown	YES	YES	
Library computers	Unknown	YES	YES	
Near meeting area table	Unknown	YES	NO	
Behind reception area, near fax	Unknown	YES	NO	
2nd Floor				
Water cooler	Unknown	YES	YES	
1st Floor				
Foyer	Unknown	YES	YES	

Two phase-couplers were used (CB panel & plug-in in black lab).
In order to "work", the receiver had to dim at least once and undim at least once.
Transmitter signal on 9/3: 8 v p-p; adjusted down on 9/8 to 6 v p-p to be same as Ariane.

PLC test results, Superheterodyne Detection System, LRC Building, 4th Floor

Date of test: 09/03/04

OUTLET LOCATION	CKT	PHASE	WORK?	NOTES
Old student area, southwest wall	P4C-1	BLK	YES	
Mechanical room & water cooler	P4C-2	BLK	XMTR	
Old student area, north wall, middle	P4C-7	BLK	YES	
SCFL room, west wall	P4C-8	BLK	YES	
Toaster & hot water	P4C-13	BLK	YES	
Terry's office	P4C-14	BLK	YES	2 C/M's* on circuit
Student computers	P4C-19	BLK	YES	
Corridor near conference room	P4C-20	BLK	YES	Sharp copier, LJ4+ printer on ckt
——-	P4C-25	BLK	n/a	n/c
White Lab - test room	P4C-26	BLK	YES	
——-	P4C-31	BLK	n/a	Exhaust fan roof
——-	P4C-32	BLK	n/a	n/c
Old student area, north & east walls	P4C-3	RED	YES	Did not unplug any of 4 C/M's*
——-	P4C-4	RED	n/a	n/c
Old student area, southeast wall	P4C-9	RED	YES	
SCFL room, east & south walls	P4C-10	RED	YES	
Microwave	P4C-15	RED	YES	
Benches/tables near windows	P4C-16	RED	YES	
——-	P4C-21	RED	n/a	n/c
White Lab - east & south walls	P4C-22	RED	YES	
White Lab - north wall	P4C-27	RED	n/a	2-phase plug
——-	P4C-28	RED	n/a	n/c
SCFL room, on roof	P4C-33	RED	n/a	RTU-1 on roof
——-	P4C-34	RED	n/a	n/c
Old student area, west	P4C-5	BLU	YES	
SCFL room, near power regulator	P4C-6	BLU	YES	UPS & 2 C/M's* on circuit
Refrigerator	P4C-11	BLU	YES	
Rich's office	P4C-12	BLU	YES	Surge protector on this circuit
Kitchenette	P4C-17	BLU	YES	HP LaserJet & refrigerator OK on ckt
Conference room	P4C-18	BLU	YES	
White Lab - south wall	P4C-23	BLU	n/a	2-phase plug
White Lab - 2nd row	P4C-24	BLU	YES	
——-	P4C-29	BLU	n/a	n/c
——-	P4C-30	BLU	n/a	3-phase plug

Two phase-couplers were used (CB panel & plug-in in black lab).

In order to "work", the receiver had to dim at least once and undim at least once (tests on 4th floor).

Repeated tests on 9/8/04 after transmitter gain adjusted to 6.00 v p-p; still worked same as above.

* C/M's = Computer/Monitors

PLC test results, Superheterodyne Detection System, LRC Building 1st, 2nd, 3rd Floors

Date of tests: 09/03/04, 09/09/04

OUTLET LOCATION	CKT/PH	WORK?	WORK?	COMMENTS
		9/3	9/9	
Mechanical room & water cooler	P4C-2	XMTR	XMTR	9/3: 8.0 v p-p; 9/9: 6.0 v p-p
3rd floor				
Outside Lenda's office	Unknown	NO	NO	
Hallway near Lenda's office	Unknown	NO	NO	
Coffee pot	Unknown	NO	NO	
Seminar room	Unknown	YES	NO	
Communications room	Unknown	NO	NO	
Outside John's office	Unknown	NO	NO	
Meeting area	Unknown	YES	YES	
Library computers	Unknown	YES	YES	
Near meeting area table	Unknown	YES	YES	
Behind reception area, near fax	Unknown	NO	NO	
2nd floor				
Water cooler	Unknown	NO	NO	
1st floor				
Foyer	Unknown	NO	NO	

Two phase-couplers were used (CB panel & plug-in in black lab).
In order to "work", the receiver had to dim once (tests on 3rd, 2nd, 1st floor).
Transmitter signal on 9/3: 8 v p-p.
Adjusted down on 9/8 to 6 v p-p to be same as Ariane.

PLC test results, Ariane Controls System, LRC Building, 4th Floor

Date of test: 08/26/04

OUTLET LOCATION	CKT	PHASE	WORK?	NOTES
Old student area, southwest wall	P4C-1	BLK	YES	
Mechanical room & water cooler	P4C-2	BLK	**XMTR**	
Old student area, north wall, middle	P4C-7	BLK	YES	Works with ≤ 4 of 6 C/M's* on ckt
SCFL room, west wall	P4C-8	BLK	YES	
Toaster & hot water	P4C-13	BLK	YES	
Terry's office	P4C-14	BLK	YES	
Student computers	P4C-19	BLK	YES	
Corridor near conference room	P4C-20	BLK	YES	Sharp copier, LJ4+ printer on ckt
——-	P4C-25	BLK	n/a	n/c
White Lab - test room	P4C-26	BLK	YES	
——-	P4C-31	BLK	n/a	Exhaust fan roof
——-	P4C-32	BLK	n/a	n/c
Old student area, north & east walls	P4C-3	RED	YES	Works only if 4 C/M's* unplugged
——-	P4C-4	RED	n/a	n/c
Old student area, southeast wall	P4C-9	RED	YES	
SCFL room, east & south walls	P4C-10	RED	YES	
Microwave	P4C-15	RED	YES	
Benches/tables near windows	P4C-16	RED	YES	
——-	P4C-21	RED	n/a	n/c
White Lab - east & south walls	P4C-22	RED	YES	
White Lab - north wall	P4C-27	RED	n/a	2-phase plug
——-	P4C-28	RED	n/a	n/c
SCFL room, on roof	P4C-33	RED	n/a	RTU-1 on roof
——-	P4C-34	RED	n/a	n/c
Old student area, west	P4C-5	BLU	YES	
SCFL room, near power regulator	P4C-6	BLU	YES	UPS & 2 C/M's* on circuit
Refrigerator	P4C-11	BLU	YES	
Rich's office	P4C-12	BLU	YES	Surge protector on this circuit
Kitchenette	P4C-17	BLU	YES	
Conference room	P4C-18	BLU	YES	
White Lab - south wall	P4C-23	BLU	n/a	2-phase plug
White Lab - 2nd row	P4C-24	BLU	YES	
——-	P4C-29	BLU	n/a	n/c
——-	P4C-30	BLU	n/a	3-phase plug

Two phase-couplers were used (CB panel & plug-in in black lab).
In order to "work", the receiver had to dim at least once and undim at least once.
Transmission done in individual address mode (ADR 654), not broadcast mode.
* C/M's = Computer/Monitors

PLC test results, Ariane Controls System, LRC Building, 1st, 2nd, 3rd Floors

Date of tests: 08/26/04, 09/08/04

OUTLET LOCATION	CKT/PH	WORK?	COMMENTS
Mechanical room & water cooler	P4C-2	**XMTR**	
3rd Floor			
Outside Lenda's office	Unknown	YES	
Hallway near Lenda's office	Unknown	YES	
Coffee pot	Unknown	YES	
Seminar room	Unknown	YES	
Communications room	Unknown	NO	
Outside John's office	Unknown	NO	
Meeting area	Unknown	YES	
Library computers	Unknown	NO	
Near meeting area table	Unknown	NO	
Behind reception area, near fax	Unknown	YES	
2nd Floor			
Water cooler	Unknown	NO	
1st Floor			
Foyer	Unknown	YES	

Two phase-couplers were used (CB panel & plug-in in black lab).

In order to "work", the receiver had to dim once at least once and undim at least once.

PLC test results, Adaptive Networks System, LRC Building, 4th Floor

Date of test: 09/16/04

OUTLET LOCATION	CKT	PHASE	WORK?	COMMENTS
Old student area, southwest wall	P4C-1	BLK	YES	
Mechanical room & water cooler	P4C-2	BLK	YES	
Old student area, north wall, middle	P4C-7	BLK	YES	
SCFL room, west wall	P4C-8	BLK	YES	
Toaster & hot water	P4C-13	BLK	YES	
Terry's office	P4C-14	BLK	YES	2 C/M's* on circuit
Student computers	P4C-19	BLK	YES	
Corridor near conference room	P4C-20	BLK	YES	Sharp copier, LJ4+ printer on ckt
——-	P4C-25	BLK	n/a	n/c
White Lab - test room	P4C-26	BLK	YES	
——-	P4C-31	BLK	n/a	Exhaust fan roof
——-	P4C-32	BLK	n/a	n/c
Old student area, north & east walls	P4C-3	RED	YES	Did not unplug any of 4 C/M's*
——-	P4C-4	RED	n/a	n/c
Old student area, southeast wall	P4C-9	RED	YES	
SCFL room, east & south walls	P4C-10	RED	YES	
Microwave	P4C-15	RED	YES	
Benches/tables near windows	P4C-16	RED	YES	
——-	P4C-21	RED	n/a	n/c
White Lab - east & south walls	P4C-22	RED	YES	
White Lab - north wall	P4C-27	RED	n/a	2-phase plug
——-	P4C-28	RED	n/a	n/c
SCFL room, on roof	P4C-33	RED	n/a	RTU-1 on roof
——-	P4C-34	RED	n/a	n/c
Old student area, west	P4C-5	BLU	YES	
SCFL room, near power regulator	P4C-6	BLU	YES	UPS & 2 C/M's* on ckt
Refrigerator	P4C-11	BLU	YES	
Rich's office (near south end bldg.)	P4C-12	BLU	**XMTR**	One ANI unit plugged in here
Kitchenette	P4C-17	BLU	YES	HP LaserJet & refrigerator OK on ckt
Conference room	P4C-18	BLU	YES	
White Lab - south wall	P4C-23	BLU	n/a	2-phase plug
White Lab - 2nd row	P4C-24	BLU	YES	
——-	P4C-29	BLU	n/a	n/c
——-	P4C-30	BLU	n/a	3-phase plug

Two phase-couplers were used (CB panel & plug-in in black lab).

In order to "work", each transceiver had to successfully transmit and receive a message.

* C/M's = Computer/Monitors

PLC test results, Adaptive Networks System, LRC Building, 1st, 2nd, 3rd Floors

Date of test:
09/16/04

OUTLET LOCATION	CKT/PH	WORK?	COMMENTS
Rich's office (near south end bldg.)	P4C-12	XMTR	One ANI unit plugged in here
3rd Floor			
Outside Lenda's office	Unknown	YES	
Hallway near Lenda's office	Unknown	YES	
Coffee pot	Unknown	YES	
Seminar room	Unknown	YES	
Communications room	Unknown	YES	
Outside John's office	Unknown	YES	
Meeting area	Unknown	YES	
Library computers	Unknown	YES	
Near meeting area table	Unknown	YES	
Behind reception area, near fax	Unknown	YES	
2nd Floor			
Water cooler	Unknown	NO	
1st Floor			
Foyer	Unknown	YES	

Two phase-couplers were used (CB panel & plug-in in black lab).
In order to "work", each transceiver had to successfully transmit and receive a message.

PLC test results, Cepco, LRC Building, 4th Floor

Date of test: 10/11/04

OUTLET LOCATION	CKT	PHASE	WORK?	NOTE
Old student area, southwest wall	P4C-1	BLK	YES	
Mechanical room & water cooler	P4C-2	BLK	**XMTR****	
Old student area, north wall, middle	P4C-7	BLK	YES	
SCFL room, west wall	P4C-8	BLK	YES	
Toaster & hot water	P4C-13	BLK	YES	
Terry's office	P4C-14	BLK	YES	
Student computers	P4C-19	BLK	YES	
Corridor near conference room	P4C-20	BLK	YES	Sharp copier, LJ4+ printer on ckt
——-	P4C-25	BLK	n/a	n/c
White Lab - test room	P4C-26	BLK	YES	
——-	P4C-31	BLK	n/a	Exhaust fan roof
——-	P4C-32	BLK	n/a	n/c
Old student area, north & east walls	P4C-3	RED	YES	Worked if 1 of 8 loads unplugged
——-	P4C-4	RED	n/a	n/c
Old student area, southeast wall	P4C-9	RED	YES	
SCFL room, east & south walls	P4C-10	RED	YES	
Microwave	P4C-15	RED	**XMTR****	
Benches/tables near windows	P4C-16	RED	YES	
——-	P4C-21	RED	n/a	
White Lab - east & south walls	P4C-22	RED	YES	
White Lab - north wall	P4C-27	RED	n/a	2-phase plug
——-	P4C-28	RED	n/a	
SCFL room, on roof	P4C-33	RED	n/a	RTU-1 on roof
——-	P4C-34	RED	n/a	n/c
Old student area, west	P4C-5	BLU	YES	
SCFL room, near power regulator	P4C-6	BLU	YES	UPS & 2 C/M's* on circuit
Refrigerator	P4C-11	BLU	**XMTR****	
Rich's office	P4C-12	BLU	YES	Surge protector on this circuit
Kitchenette	P4C-17	BLU	YES	
Conference room	P4C-18	BLU	YES	
White Lab - south wall	P4C-23	BLU	n/a	On 2-phase plug
White Lab - 2nd row	P4C-24	BLU	YES	
——-	P4C-29	BLU	n/a	n/c
——-	P4C-30	BLU	n/a	On 3-phase plug

* C/M's = Computer/Monitors

** The Cepco system needs a special device to repeat signals for the other phases, which was not purchased (coupling capacitors are not appropriate); therefore, the transmitter was plugged into three different outlets that were in close proximity to each other, but each on a different phase.

PLC test results

Cepco - LRC Building, 1st, 2nd, 3rd Floors

Date of test: 10/08/04

OUTLET LOCATION	CKT/PH	WORK?	COMMENTS
		9/3	
Mechanical room & water cooler	P4C-2	**XMTR**	Since the phases of the outlets on these floors were unknown and coupling capacitors aren't appropriate for this product, the outlets were tested with the XMTR on all 3 phases, 1 phase at a time
Microwave	P4C-15	**XMTR**	
Refrigerator	P4C-11	**XMTR**	
3rd Floor			
Outside Lenda's office	Blue	YES	
Hallway near Lenda's office	Unknown	NO	
Coffee pot	Blue	YES	
Seminar room	Unknown	NO	
Communications room	Unknown	NO	
Outside John's office	Unknown	NO	
Meeting area	Unknown	NO	
Library computers	Unknown	NO	
Near meeting area table	Unknown	NO	
Behind reception area, near fax	Unknown	NO	
2nd floor			
Water cooler	Unknown	NO	
1st floor			
Foyer	Unknown	NO	

In order to "work", the receiver had to receive a shed command and an unshed command.
This test was repeated using the Model TR-BST(PN) Signal Booster Module, but the booster made no difference in the test results.

PLC test results, Curtis Lumber

Offices, 2nd Floor, Circuit Breaker Panel #1					
Location	**~Feet**	**ANI**	**Sync**	**SupHet.**	**Ariane**
Transmitter	0	——-	——-	——-	——-
Smoke room	5	YES	YES	YES	YES
Hallway near security room	25	YES	YES	YES	YES
Hallway near Doug's office	50	YES	YES	YES	YES
Conference room	75	YES	YES	YES	YES

Offices, 1st & 2nd Floor, Circuit Breaker Panel #2					
Location	**~Feet**	**ANI**	**Sync**	**SupHet**	**Ariane**
Sales office 1, 2nd floor	55	YES	YES	YES	YES
Sales office 2, 2nd floor	20	YES	YES	YES	YES
Transmitter, 2nd floor	0	——-	——-	——-	——-
Special Orders office, 2nd floor	50	YES	YES	YES	YES
Hallway in Special Orders, 2nd floor	75	YES	YES	YES	YES
Bonnie Lee's office, 2nd floor	100	YES	YES	YES	YES
Contract Sales office, 1st floor	125	YES	YES	YES	NO
Contract Sales office, 1st floor	175	YES	NO	NO	NO

Circuit Breaker Panel #3 (front of retail store)

Adaptive Networks Inc.				
	√	√	√	√
	√	√	√	√
	√	√	√	√
	√	---	---	√
	√	√	√	√
	---	---	---	XMTR

Ariane Controls				
	x	√	√	√
	√	√	√	√
	√	√	√	√
	x	---	---	√
	√	√	√	√
	---	---	---	XMTR

Synchronous Detection				
	x	√	√	√
	√	√	**x**	√
	x	√	√	√
	x	---	---	√
	√	√	√	√
	---	---	---	XMTR

Superheterodyne Detection				
	x	**x**	**x**	**x**
	x	**x**	**x**	**x**
	x	√	√	**x**
	x	---	---	√
	√	**x**	√	√
	---	---	---	XMTR

The matrices above represent support poles, 30 feet apart, which are on the main floor of the Curtis Lumber store. Duplex outlets are mounted on 19 of these poles. The transmitter of the PLC system being tested was plugged into the outlet in the lower right corner; nothing else was plugged into this outlet. The receiver for the system being tested was then plugged into one of the 18 available outlets. If it successfully received at least one load-shed and one no-shed signal, a checkmark (√) was placed in the appropriate matrix location; otherwise, an x character (**x**) was placed in the matrix location. The receiver was then plugged into another available outlet, and the results were again observed and marked in the matrix until all 18 outlets were tested. The test was then repeated for the other systems.

---	No outlet available
	Outside of available test area
Note:	No electrical schematics available, so no details available about circuits

PLC test results, Greene Bldg

FLOOR	LOCATION	CIRCUIT	N-E-S-W	ANI	Synch	Ariane	SupHet
B'ment	Student studio, west wall	29	NW	v	v	v	v
	Student studio, west wall	29	SW	v	v	v	v
	Student studio, inside wall 1	35	N	v	v	v	v
	Student studio, inside wall 1	15	S	v	v	v	v
	Student studio, inside wall 2	4	S	v	v	v	v
	Student studio, east wall	25	S	v	v	v	v
	Hallway, water cooler	31	---	v	v	v	v
	Acoustics studio	31	N	v	v	v	v
	Men's room	12	S	v	v	v	x
One	Student studio, west wall	32	N	v	v	v	v
	Student studio, west wall	32	S	v	v	v	x
	Student studio, east wall	26	S	v	v	v	x
	Classroom	15	S	v	v	v	x
	Student studio, outlet near radiator	34	N	v	v	v	v
	Hallway, around middle	30	---	v	v	v	x
	Conference room	??	N	v	v	v	x
	Office, projector, 15 chairs, table	12	S	v	v	v	v
	Office of dean, outlet behind 3 chairs	??	N	v	v	v	x
	Office, outlet in front of glass	11	S	v	v	v	v
	Location further in, coffee	11	S	v	v	v	x
Two	Student studio, west wall	6	N	v	x	x	x
	Student studio, east wall	21	N	v	v	v	v
	Office foyer	3	S	v	v	v	x
	Exhibition room, right of doors	21	N	v	v	v	x
	PHD room, glass doors	13	SE	v	v	v	x
	Conference room, large table, left	42	S	v	v	v	x
	Conference room, large table, right	27	S	v	v	v	v
Three	Library, outlet w/o ground	12	N	v	v	v	x
	Library	18	S	v	v	v	v
	Office, outlet next to door	6	N	v	v	x	x
	Office, outlet near file cab & window	42	S	v	v	x	v
	Architectural design studio	11	N	v	v	x	x
	Lab, quad outlet on left	28	S	v	v	v	x
	Water cooler	40	---	v	v	v	x
	Office, outlet on SE wall	33	S	v	v	x	x
Four	Student studio	8	NW	v	v	v	v
	Student studio	8	N	v	v	v	x
	Student studio	10	N	v	v	v	v
	Student studio	10	NE	v	v	x	v
	Sid's wood workshop, near entrance	1	N	v	v	v	x
	Sid's wood workshop, drill press	20	S	v	v	x	x
	Sid's wood workshop, back of shop	18	SW	v	v	v	x
	Empty room, north wall	37	---	v	v	v	x
	Empty room, south wall	37	S	v	v	v	x
	Empty room, east wall	37	SE	v	v	v	x
Outlets able to receive signal / Total number of outlets:				45/45	44/45	38/45	19/45

ANI: Adaptive Networks, Inc. Ariane: Ariane Controls

Synch: Synchronous Detection design –LRC SupHet: Superheterodyne design - LRC

NOTE1 ANI system inadvertently tested with notebook computer plugged into transmitter outlet; despite this severe handicap, all outlets still were able to receive the signal.

NOTE2 Transmitters were in the basement, near the center of the building & slightly to the north side.