CALIFORNIA
ENERGY
COMMISSION

2005 Annual Project Updates for the Public Interest Energy Research Program (PIER) – Draft

STAFF REPORT

March 2006
CEC-500-2006-037-SD

Arnold Schwarzenegger, *Governor*

CALIFORNIA ENERGY COMMISSION

Jamie Cameron-Harley,
Project Manager

Martha Krebs,
Deputy Director
ENERGY RESEARCH AND DEVELOPMENT DIVISION

B.B. Blevins,
Executive Director

Table of Contents

Residential and Commercial Buildings End-Use Efficiency (BLDGS) Multi-Year Projects Started in 2005 27

2008 Building Efficiency Standards Research 28

2008 Title 24 Codes & Standards Enhancement for Residential Cool Roofs 29

Affordable Multi-Family Zero Energy New Home (ZENH) Project 30

Battery Charger and Power Supply Standards Evaluation 31

Commercial Gas Fryer for Food Service 32

Commercializing Zero Energy New Home Communities 33

Demand Response Evaluation Methodology and PCF CASE Inititative Activities: J Carlos Haiad/DES 34

Develop Recommendations to Improve Hot Water Equipment and System Efficiencies in California Homes 35

Development of Recommendations to Integrate Emerging Technologies into the 2008 Nonresidential Standards 36

Green Building Studio Enhancement 37

Integrating Building Commissioning into the State Building Construction Process 38

Next Generation Instantaneous Water Heater 39

Phase 3 Research into Low Power Modes: Statewide Survey 40

Super Efficient Gas Water Heating Appliance Initiative 41

Three Year Collaborative Research with Lighting Research Center 42

Utility-Focused Market Model for Zero Energy New Homes 43

BLDGS Active Projects from Previous Years 44

Advanced HVAC Systems for Improving Indoor Environmental Quality and Energy Performance of California K-12 Schools - Program Admin . **Error! Bookmark not defined.**

Advancement of Electrochromatic Windows 45

AHU/VAV Diagnostics 46

ARTU 47

Building Commissioning - Innovation to Practice 48

California Lighting Technology Center at the University of California, Davis 49

Classroom HVAC: Improving Ventilation and Saving Energy 50

Cool Ducts 51

Cool Roof Colored Materials 52

Cooling Solutions Collaborative Program 53

Demonstration of a New, High-Efficiency Air-Conditioning System 54

Effectiveness of UVC Technology for Improving School Performance 55

Energy Efficient UC/CSU Campuses 56

Field Study of the Impacts of Underfloor Air Distribution 57

Final Phase Research - HPCBS Program 58

Hot Dry Optimized AC 59

Investigation of Mold-Resistant Building Assemblies and Construction Practices for California Homes 60

Modeling for Under Floor Air Distribution (UFAD) 61

National Building Control Information Program 63

NightBreeze Products 64

PIER Buildings Program Tech Transfer Initiative 65

Power Supplies Efficiency Improvement 67

Program Market Connection 68

Residential Retrofit Commissioning 69

Residential Ventilation Standards Research 70

RTU Diagnostics 71

Speciflow 72

Thermal Displacement Ventilation (TDV) in Schools 73

Web-based Diagnostics 74

BLDGS Projects Completed in 2005 75

Attic Heat for Water Heating 76

Attic Ventilation 77

Conceptual Design Energy Analysis Tool Phase 2 78

Development and Demonstration of a Rapid Radiant Distribution System 79

Ducts in Conditioned Space 80

Energy Efficiency Through Community Design 81

Envelope and IAQ Interactions 82

Evaluation of Alternative Hot Water Distribution Systems 83

Evaporative Coolers and Cool House Fan Integration 84

Lighting Research Program-Advanced Lighting Luminaires and Systems 85

Lighting Research Program-Advanced Lighting Technologies 87

Lighting Research Program-Demand Responsive Lighting Systems 89

Lighting Research Program-Lighting Performance Metrics, Codes and Standards 91

Lighting Research Program-Market Connection 93

National Lighting Product Information Program and Daylight 95

Profitability, Quality and Risk Reduction Through Energy Efficiency 97

Prototype Development of a Combined Refrigerator and Electric Water Heater 98

Safety Analysis and Testing of a Heat Pump Water Heater
Condensate Recovery System 99

Simplified HVAC Controls 100

BLDGS Projects Completed in 2004 101

Alternatives to Compressor Cooling: Phase V - Integrated Ventilative Cooling 102

Assessing Building Vulnerability to Chemical and Biological Threats 104

Building Specification Guidelines for Energy Efficiency 105

California Commissioning Collaborative 107

Design Refinement and Demonstration of a Market-Optimized Residential
Heat-Pump Water Heater 108

Development of an Advanced Indirect Heat Exchange Module 110

Energy Efficient and Affordable Small Commercial and Residential
Buildings for a Growing California 112

Instrumented Home Energy Rating and Commissioning 117

Integrated Energy Systems-Productivity and Building Science 118

Investigation of Secondary Loop Supermarket Refrigeration Systems 125

Lighting Research Center Partners Program Membership 126

Removing the Key Technical Barrier to the Widespread Use of
Advanced Absorption Cooling 128

BLDGS Projects Completed in 2003 130

Advanced Duct Sealant Testing 131

ARTI Membership 133

Center for the Built Environment (CBE) Membership 135

Commercial Buildings Cool Roofs Monitoring 137

Cooling Solutions 139

Energy Efficient Downlights for California Kitchens 140

High Performance Commercial Buildings Systems 142

The project has been completed. 148

BLDGS Projects Completed in 2002 149

Conceptual Design Energy Analysis Tool (CDEAT) R&D 150

HVAC Distribution Systems in Commercial Buildings 152

Improving Energy Efficiency of Commercial Kitchen Exhaust Systems 153

Next-Generation Power Management User Interface for Office Equipment 155

Sustainable Building Fiscal/Economic Analysis 157

BLDGS Projects Completed in 2001 158

A Tool for the Comprehensive Analysis of Low-Rise Residential Buildings 159

Center for the Built Environment (CBE) Membership 160

Characterization of Framing Factors for New Low-Rise Residential
Building Envelope 162

Increased Energy Efficiency of Refrigerators and Air Conditioners
Through Use of Advanced Power Electronics 163

Lighting Research Center Partners Program Membership 165

BLDGS Projects Completed in 2000 167

Alternatives to Compressor Cooling....168

Building Design Advisor....170

CIEE Collaborative Program Planning and Management....172

Commercial Building Lighting....173

Commercial Building Thermal Storage....175

Commercial Cooling and Heating Pump Applications (#1417)....176

Commercial Heat Pump/Air Conditioning....178

Commercial Thermal Distribution Systems....180

Develop R&D Plan for PIER Buildings Team for Indoor Air Quality....181

Development of High Efficiency Lighting Torchieres....182

Diagnostics for Building Commissioning and Operations....183

Evaluate Small Air Conditioning Units for Northern/Central California....184

Improve C/E of Building Commissioning....185

Residential Heat Pump Technology....187

Residential Thermal Distribution Systems....189

BLDGS Projects Completed in 1999....191

Improve C/E of Building Control Systems....192

Industrial-Agricultural-Water End-Use Energy Efficiency (IAW) Multi-Year Projects Started in 2005....193

Assessing Risks and Benefits of Drinking Water Utility Energy Management Practices....194

Demonstration of a Low Energy Seawater Desalination Process....195

Evaluation of the Dynamic Energy Consumption of Advanced Water and Wastewater Treatment Technologies....196

Flywheel Energy Storage System (FESS) for Grid Frequency Regulation....197

Water Consumption Forecasting to Improve Energy Efficiency of Pumping Operations....198

IAW Active Projects from Previous Years....199

Decreasing Electric Demand in California Oilfield Operations by Reducing Excess Water Production....200

Demand Response Analysis and Tool Development for IAW End Users 201

Demand Response Database 202

Demonstration of Energy Efficient Ultra Low NOx Burner (ULNB) Control Technology 203

Development and Demonstration of Digital System for Control and Monitoring of Oxygen Transfer Efficiency Measurements 204

Development of a Utility Energy Index to Assist in Benchmarking of Energy Management for Water and Wastewater Utilities 205

Development of an Ultracapacitor-Based Stabilizing System for Generators in Industrial and Commercial Facilities..... 206

Electrodialysis Systems for Tartrate Stabilization of Wine 207

Energy Efficient Agricultural Technologies..... 208

Energy Efficient Arsenic Removal from California Drinking Waters 209

High-Performance High-Tech Buildings/Laboratories, Cleanrooms, and Data Centers Project..... 210

Infrared Drying of Rice to Improve Energy Efficiency and Disinfestation 211

Metropolitan Water District of Southern California 212

Oil-Field Flare Gases Electricity Project (Offgases) 213

PIER Agriculture Energy End Use Efficiency 214

Topping Cycle Technology for Optimization of Can Cooker/Cooler Operation 215

Water and Wastewater Energy Efficiency Roadmap 216

Zero Liquid Discharge and Volume Minimization for Inland Desalination 217

IAW Projects Completed in 2005 218

Development of an Integrated Benchmarking and Energy and Water Management Tool for the Wine Industry 219

IAW Projects Completed in 2004 220

Acoustic Stimulation for Aluminum Castings to Conserve Metal and Electricity 221

Energy Efficiency Roadmap for Petroleum Refineries in California 223

Gas Fired Hot Water Heat Pump Thermosorber for Food and Beverage Industry 225

Methodology to Optimize Compressed Air Energy Efficiency for Industry 227

Power Quality Knowledge-Based Services (EPRI Program #97) 229

RD&D Program Development for Ensuring Energy Supply for California's Electronics/E-Commerce Industries 231

IAW Projects Completed in 2003 232

Advanced Distillation 233

Effects of Chlorine Dioxide Preoxidation on Ozone Demand and Energy Consumption 235

Emerging PQ Mitigation Product Demonstration at Customer Sites 236

Energy Efficiency Measures for High Tech Buildings, Clean Rooms and Laboratories 237

Energy Efficient Data Centers 239

Energy Storage and Power Electronics for Power Quality Solutions 241

Improving Power Quality Immunity in Industrial and Commercial Equipment 243

Industrial Design Guide Enhancements 244

Multi-Energy Park Application 245

Power Quality Knowledge-Based Services 246

Power Quality Performance-Based Rate Design 247

Voltage Sag Prediction Model Using Distribution Power Quality Phase II Data 248

IAW Projects Completed in 2002 249

Agriculture and Food Technology Alliance (AFTA) - Program 13 250

Development and Demonstration of Liquid Membrane Technology for MTBE Mitigation in Aqueous Streams 252

Electrotechnology Application for Potable Water Production & Protection of the Environment 254

HydrogenPinch™ Studies at the British Petroleum Los Angeles Refinery 271

Industrial Demonstrations 272

Power Quality for Customer Systems - Program 2 273

Production, Manufacturing, and Electronics Industries - Program 12 276

Recycling Chiller-Bath Rinse Water in Poultry Processing 277

IAW Projects Completed in 2001 278

Assessing the Impact of Power Quality for California Industries 279

Customer Power Conditioning Solutions - Target 4 281

Guidebook on Power Quality Guidelines for Energy Saving Products 284

Summer Electric Load Reduction in California's Cast Metal Industry 285

IAW Projects Completed in 2000 286

1999 & 2000 Agriculture 287

1999 & 2000 Food Processing 289

Chemicals, Petroleum and Natural Gas - Target 23/2.6 291

Customer Power Conditioning Solutions 293

Electronics Industry 296

High Efficiency Steam Generation (#1218) 298

Industrial Waste Processing (#825) 300

Laboratory Type Facilities 301

Materials Fabrication Industry 304

Materials Production Industry 306

Municipal Water and Wastewater Industry 308

Power Quality for Improved Industrial Operations 310

IAW Projects Completed in 1999 313

Food Service Technology Center 314

Integrated Agricultural Technology 316

Low Dross Aluminum Melter 318

Water and Wastewater Electrotechnologies 319

Renewable Energy Technologies (REN) Multi-Year Projects Started in 2005 321

Demonstration of Engineering-Based Cement Evaluation Method for Geothermal Wells 322

Development of Fluid Injection Strategies for Optimizing Steam Production at The Geysers, California 323

Imperial Valley and Tehachapi Implementation Groups 325

Integrated Geothermal Systems Simulator to Enhance Power Generation at the Geysers 326

SMUD - 5.1 PV Carport 327

SMUD - 5.10 SMUD Wind Integration Study 328

SMUD - 5.2 Performance Based Incentives for PV 329

SMUD - 5.3 Off-Peak Over-Cooling 330

SMUD - 5.4 Evalute the Spheral Solar BIPV Product 331

SMUD - 5.5 PV for Emergency Power 332

SMUD - 5.6 Demonstrate Landfill Technology to Maximize Gas Recovery Efficiency and Peaking Power Potential 333

SMUD - 5.7 Feasibility Assessments of Sacramento Municipal Solid Waste to Electricity Potential 334

SMUD - 5.8 Centralized Diary Digester with Power Generation 335

SMUD - 5.9 Low Nox Power Generation for Anarobic Diary Digester 336

Structure of Salton Sea Geothermal Field from Passive Seismic Measurements 337

REN Active Projects from Previous Years 338

Biogas-fueled Low Emission HCCI Generator 339

California Biomass Collaborative 340

California Wind Energy Collaborative 341

Commonwealth - 1.1 Program Planning and Analysis 342

Commonwealth - 2.2 Enhanced Energy Recovery Through the Use of Microturbines & Optimization of Anaerobic Digestion 343

Commonwealth - 3.1 Diary Waste to Energy 344

Commonwealth - 3.2 Building Integrated PV Evaluation 345

Community Choice Aggregation Pilot Project 346

Composite Taller Towers for Low to Moderate Wind Shear 347

Development and Demonstration of 50 kW Small Modular Biopower System 348

Development and Demonstration of a Distributed Biogas Energy System Utilizing Organic Solid Wastes 349

Feasibility Study of PV Breakthroughs 350

HH - Project 1.3 New Geothermal Resource Assessment....351
HH - Project 2.1 Upgrading Existing Geothermal Sites....352
HH - Project 3.1 Distributed Generation Assessment....353
HH - Project 3.2 Biomass Project Distributed Generation Value Analysis....354
HH - Project 4.2 Hybrid Biofuel/Natural Gas....356
HH - Project 4.3 Energy Storage for Renewable Generation....357
HH- Project 1.1 Feasibility of Interconnecting Pacific HVDC Intertie....358
HH- Project 1.2 New Wind Site ID and Qualification....359
Hydrogen-Assisted Lean Operation for Biogas Reciprocating Engines....360
Landfill Gas Fired 250 kW Microturbine....361
Ocean Wave Energy Resource Assessment for California....362
Photovoltaic Power Generation with Direct Current Applications....363
SMUD - 1.1 Technology Assessment for Advanced Biomass Power Generation....364
SMUD - 1.2 PV Markets and Technologies (SEPA)....365
SMUD - 1.3 Utility System Capacity & Customer Demand Value....366
SMUD - 1.4 Performance Indexing of PV Systems....367
SMUD - 1.5 Assessment: Worst Case Climatic Conditions....368
SMUD - 2.1 Accelerated Anaerobic Composting Project for Energy Generation....369
SMUD - 3.1 UNI-SOLAR PV Roofing....370
SMUD - 3.2 BIPV Mounting Approaches for New Construction....371
SMUD - 3.3 SunTile: Mainstreaming PV for Residential Rooftops....372
SMUD - 3.4 Flat Roof Mounting Approaches....373
SMUD - 3.5 Optimization of Residential PV Systems....374
SMUD - 3.6 Remote Dispatch & PV Irrigation....375
SMUD - 3.7 PV and Evaporative Cooling....376
SMUD - 3.8 Solar Dish Concentrating with Stirling Engine....377
SMUD - 4.1 Non-vacuum, Thin-Film CIGS PV Modules....378

SMUD - 4.2 Maximum Power Point Tracker & Operational Dispatch 379

SMUD - 4.3 Demonstration of a Full-Spectrum Lighting System 380

SMUD - 4.4 Slat-Array Concentrator Development 381

SMUD - 4.5 Distributed Generation Geartrain for Megawatt Turbines..... 382

Strategic Value Analysis: GIS Development #2 383

The Flex-Microturbine Uniquely Adapted to Low Pressure Biomass Gas 384

Tracking the Sun for High Value Grid Electricity 385

Valley Fig Growers Anaerobic Digester 386

Wind Energy Resource Modeling and Measurement..... 387

Wind Forecasting 388

REN Projects Completed in 2005 389

Co-Production of Silica from Geothermal Fluids 390

Powerwheel Demonstration 391

Strategic Value Analysis: Power Flow Simulations and Development of Renewable RD&D Performance Goals 392

REN Projects Completed in 2004 393

California Wind Energy Consortium 394

Clean Power Estimator 396

Collins Pine Co. BCI Cogeneration Project..... 397

Evaporative Cooling of Geothermal Power Plants with Recycled Water 399

Strategic Value Analysis: GIS Development 401

Utilization of Waste Renewable Fuels in Boiler with Minimization of Pollutant Emissions..... 403

Wind Turbine Company EMD Turbines 405

REN Projects Completed in 2003 407

Collins Pine Co. BCI Cogeneration Project..... 408

Improving Energy Recovery at the Geysers Geothermal Field by Delineation of In-Situ Saturation 410

Renewable Technology Strategic Information 412

REN Projects Completed in 2002 413

Application of Small Modular Biopower System for Power Generation from Forest Residue 414

Design & Optimization of a Solar Fired 2E Absorption Chiller 416

Development of an Extended Logging Tool for Geothermal Exploration and Field Development 417

Hybrid Solar-Fossil Thermophotovoltaics 419

Natural Gas Cofiring in Biomass Fueled Boilers 420

PowerGuard California Manufacturing 422

PowerTherm Product Development 424

Renewable Technology Options & Green Power Marketing - Program 84 426

Residential Electric Power Security 428

The Next Generation Turbine Development Project 430

TrueWind Solutions, LLC 432

REN Projects Completed in 2001 434

Renewable Technology Options & Green Power Marketing - Target 84 435

REN Projects Completed in 2000 437

California Renewable Energy Technology Market & Benefit Assessment 438

California Wind Energy Forecasting System 439

Photovoltaic (PV) Chargeport Demonstration 441

Renewable Technology Options and Green Power 442

REN Projects Completed in 1999 445

Photovoltaics 446

Solar Two 447

. 448

Environmentally-Preferred Advanced Generation (EPAG) Multi-Year Projects Started in 2005 449

Cost-Effective NOx Control for Stationary Diesel Engines, Phase II: Beta Field Demonstration 450

Proof of Concept and Test Validation of a 25kW Dual Shell Stirling Engine 451

EPAG Active Projects from Previous Years 452

A 5 MW Zero-Emission Gas-Fired Power Plant 453

A Proposal for an Ultra-Low Emissions System Development Project 454

Advanced Laser Ignition System Integrated ARICE Project (A Consortium of CEC's ARICE and USDOE's ARES Programs) 456

An Integrated Distributed Power System Using a PEM Fuel Cell and an Autothermal Cyclic Reformer 457

Catalytic Combustion Retrofit of a Gas Turbine at Sonoma Development Center 458

Catalytic Combustor-Fired Industrial Gas Turbine 460

Demonstration and Testing of Microturbine Generators (UCI - APEP) 461

Development of a Partial Oxidation Gas Turbine for Combined Electricity and Hydrogen-Enriched Fuel Gas Production 462

Development of Steady-State Analytical Tools for Fuel Cells (UCI - NFCRC) 463

Dynamic Modeling of Fuel Cells and Hybrid Systems (UCI - NFCRC) 464

Engine CHP Integrated Cooling and Heating Module Development 465

High Efficiency Ultra-Low NOx Supplemental Firing Burner 466

Integrated Gas Handling System for Renewable Fuel Simulation 467

Jet Mixing in Rich-Quench-Lean Combustors 468

Low Cost, High Efficiency, Ultra-Low NOx ARICE Solution Using HCCI Combustion .. 469

Low NOx - Low CO MTG Combustor 470

MTG Combustion System Capable of Operating on Medium and Low Btu Gas and Liquid Fuels 471

Multi-Fueled 10-100 kW Solid Oxide Fuel Cell Power Module 472

Power Generation Integrated in Burners for Packaged Industrial/Commercial Boilers. 473

Premium Power for Small CHP Systems 474

Ultra-Low NOx Combustion System for a 13.5 MW Gas Turbine Generator 475

EPAG Projects Completed in 2005 476

Demonstration of a Low Emission Advanced Vortex Combustor 477

Development of a Cost Effective NOx Reduction Retrofit for Stationary Diesel Engines 478

Low NOx GT Combustor 479

Xonon Ultra-Low Combustion in Small Multican Turbines 480

EPAG Projects Completed in 2004 481

Distributed Energy Resources (EPRI Program #101) 482

EPAG Projects Completed in 2003 483

Catalytic Combustor - Fired Industrial Gas Turbine for Distributed Power & Cogeneration Applications 484

DER Technologies Assessment and Databases 486

EPAG Projects Completed in 2002 487

75-kW MCFC Power Plant Verification Test Project 488

A Novel Steam Reforming Reactor for Fuel Cell Distributed Power Generation 489

Advanced Fuel Cells 490

Distributed Generation 493

Durability of Catalytic Combustion Systems 495

Emerging Distributed Resource Technologies - Program 33 497

Energy Efficient, Low Emission, Cost Effective MicroPilot Ignited Natural Gas Engine Driven Genset for Deregulated, Distributed Power Generation Market 501

Low NO_x Gas Turbine Combustors for Distributed Power Generation 502

EPAG Projects Completed in 2001 505

Solid Oxide Fuel Cell/Micro Turbine Gen. Hybrid 506

EPAG Projects Completed in 2000 508

Advanced Fuel Cells (#165) 509

Emerging Distributed Resource Technologies 510

Fuel Cell Development and Demo 513

EPAG Projects Completed in 1999 514

Analyses and Technology Transfer for Fuel Cells - National Fuel Cell Research Center 515

Micro Turbine Generator (Distributed Generation) 517

Energy Systems Integration (ESI) Multi-Year Projects Started in 2005 519

Demand Response as a System Reliability Resource 520

Evaluation of Policy Impacts on the Economic Viability from a Project Owner's Perspective of California Based Distributed Generation/Combined Heat and Power ... 521

High Temperature Low Sag Conductor Test II 522

Modeling and Testing of Effects of Unbalanced Loading on Voltage Regulation-DTE . 523

Modeling Interconnection Analysis & Planning 524

Multi-Area Real-Time Transmission Line Rating (RTR) Study: Rob Mohr/VG 525

ESI Active Projects from Previous Years 527

Demand Response as a System Reliability Resource 528

Verification of Optimal Methodology 529

Electric Grid Infrastructure Security Initiative: Phase 1 530

DUIT-Distributed Utility Integration Test 531

Demonstration of a Zinc-Bromine Battery (ZBB) Energy Storage System 532

Automated Demand Response in Large Facilities 533

Demand Response through Thermal Mass 535

Dynamic Electricity Pricing and Demand Response 536

CERTS-Microgrid Laboratory Test Bed 538

Reflective Energies 539

Universal Interconnect Device-Northern 540

Innovative Ratemaking Treatment for DER-Synapse 541

SF Coop DER Regional Solutions Project 542

DER Partnership Interconnection and Market Integration 543

Service-Based Universal Application Interface for Demand Response Energy Systems 545

California Demand Response Business Network 546

Network Security Architecture 547

New Thermostat, New Temperature Node, and New Meter 548

High Temperature Low Sag Conductor Test I 549

Center for the Study of Electricity Markets 550

Demonstration of Intelligent Software Agents for Control &

Scheduling of Distributed Generation 551

ESI Projects Completed in 2005 553

Sagging Line Mitigator (SLiM) Full Scale Demonstration 554

Development of a Real-Time Monitoring/Dynamic Rating System for Overhead Lines 555

Development/Demonstration of Methodology to Assess Value of DER 557

Distributed Utility Integration Test "DUIT" 558

Real Time Ratings for Sacramento Area 559

California CHP Market Assessment 561

CERTS Demand Response Amendment 562

ESI Projects Completed in 2004 564

2 kWhr Flywheel Energy Storage System 565

CERTS Microgrid Amendment 568

CERTS Real Time System Grid Management 570

Composite Reinforced Aluminum Conductor (CRAC) 571

DR Online Resources Guide Update 573

Electric System Reliability Enhancements 574

Electric System Seismic Safety & Reliability Study 576

Energy Storage for Transmission or Distribution Applications (#94) 578

Modeling Interconnection Analysis & Planning 580

Modeling Interconnection and Anti-Islanding of DER-Endecon 582

Real Time Ratings for Path 15 583

Reflective Energies 584

Seismic Studies 586

ESI Projects Completed in 2003 588

Development of a Real-Time Monitoring/Dynamic Rating System for Overhead Lines 589

Energy Storage for Transmission or Distribution Applications 590

Enterprise Information Security 592

ESI Projects Completed in 2002 593

Assessing California Reserve Margins 594

Composite Reinforced Aluminum Conductor (CRAC) 595

Distributed Energy Resources Public Website 597

Enterprise Information Security (EIS) - Program 86 599

Field Trials of Promising Prototype And/Or Emerging Energy Storage Options for T&D Applications 601

Identifying Opportunities in Distributed Generation 602

Intelligent Software Agents for Control & Scheduling of Distributed Generation 605

Overhead Transmission: Overhead Transmission Line Reference Manual - Program 35 607

Sagging Line Mitigator (SLiM) 608

Transmission & Substation Asset Utilization - Program 38 609

ESI Projects Completed in 2001 611

Airports and Other Complex Intermodel Systems 612

Demonstration and Evaluation of Emerging Distributed Energy Technologies 614

Distributed Resources: Information for Business Strategies - Target 34 616

Emerging Distributed Resource Technologies - Target 33 619

Energy Source Stabilizer (ESS) 622

Enterprise Infrastructure Security - Target 86 623

Flexible AC Transmission Systems - Target 38A 625

Grid Operations and Management - Target 39 627

Grid Planning and Development - Target 40 629

Interconnection Requirements for Distributed Energy Resources 632

Light-Activated Surge Protection Thyristor for Distribution System Reliability 634

Phasor Measurement Units..... 635

Power Quality Impacts of Airport GSE Charging Systems..... 636

ESI Projects Completed in 2000 637

Airport Solutions..... 638

Development of a Composite Reinforced Aluminum Conductor..... 640

Distributed Generation (#733)..... 642

Distributed Resources Demonstration 643

Dynamic Circuit Thermal Line Rating (DCTR) 645

Electric System Seismic Safety and Reliability 646

Grid Operations and Management..... 647

Grid Planning & Development - Target 57/30 649

Knowledge-Based Customer Metering 651

Opportunities in Networked Home Communities 653

Power Markets and Risk Management 655

Secondary Distribution Impacts of Residential EV Charging 657

Substation Reliability..... 659

Systems Stability and Reliability 661

USAT MOD-2 665

Energy Innovations Small Grants Program (EISG)
Multi-Year Projects Started in 2005 667

Advanced Cathode Materials for Solid Oxide Electrolyzers..... 668

Alternative Synthetic Fuels Injector Tests 669

Atmospheric Plasma Deposition of N-type Zinc Oxide for Thin Film Photovoltaics 670

Ceramic Electrolyte Production on Pre-Formed ITSOFC Substrates 671

Concentrating Triple-Junction PV Systems for Distributed Power Generation 672

Development of a Wireless Lighting Control Network..... 673

Development of Optimization Software for an Activated Sludge System 674

Direct Ethanol Solid Acid Fuel Cells 675

Evaluation of Molybdenum Removal from Power Plant Waste Streams Using Innovative Nanoparticle Media 676

High-Efficiency Air-Conditioner on Single-Phase Electricity 677

Hydrogen Micro-Sensor for Real Time Diagnostic of Transformer Oil 678

Improved Wind Turbine Blade Design with Advanced Composite Materials and Processes 679

Ion Sense Based Air-Fuel Ratio Control in Stationary IC Engines 680

Low-level Concentrating Photovoltaic System 681

Metallic Interconnects for SOFC Systems: Surface Engineering for Improved Durability and Reduced Contact Resistance 682

Non-Restrictive Pressure Relief Heat Trap 683

Petrophysical Interpretation of Fractures and Fluids in Geothermal Fields for Improved Energy Generation 684

Phase-Change Frame Walls (PCFWs) for Peak Demand Reduction, Load Shifting, and Energy Conservation in California 685

Solar CAT Critical Technology Demonstration 686

EISG Active Projects from Previous Years 687

A Low-NOx Porous Ceramics Burner Performance Study 688

A New Physical Water Treatment Technology for Energy-Efficient Water-Cooled Air Conditioning Systems 689

A Novel Integrated Doubly-Fed Electric Alternator/Active Filter (IDEA) for Wind Power Applications 690

A PCM Slurry System to Decrease Peak Air Conditioning Loads 691

A Unique Dielectric Light Injector for Ultra Efficient Photovoltaic Cavity Converters: A Novel Approach for Advanced Solar Concentrators and Directed Laser Power Beam Applications 692

A Zero Current Ripple, Energy Efficiency and Reliable Low Cost Residential and Commercial Zero Emission Direct Power-Conversion System 693

Actively Controlled Jet Injection in Gas Turbine Engine 694

Advanced Generation of H2 and CO from Improved Methane-Carbon Dioxide-Steam Reforming Process, for use as Fuel and Methanol, Gasoline Synthesis Gas ... 695

AGF Pasteurization Process Assessment, Orange County, CA ... 696

Agripower-Renewable Generation: Agricultural Waste & Forest-Thinnings-To-Energy ... 697

An Innovative Approach to Stabilize the Thermal Conductivity of Air Plasma-Sprayed Thermal Barrier Coatings ... 698

Application Feasibility Study of Gravitational Non-equilibrium Heat Pumps and Heat Engines ... 699

Application of Stochastic Filtering and Control Methodology to the Optimization of Wind Turbine Control Design ... 700

Attic and Crawl Space Ventilation Air Heat Exchanger ... 701

Automating Window Sunshade Control: Toward the Zero Energy House ... 702

Biofiltration Abatement of Landfill Gas Energy Exhaust Pollutants ... 703

Biomass-to-Syngas, Novel Low-Cost Counter-Current Process ... 704

Biosolar Conversion of Carbon Dioxide into Hydrogen Via Bacteria Embedded in Colloidal Gas Aphrons ... 705

Build and Test a 3 kW Prototype of a Co-Axial, Multi-Rotor Wind Turbine ... 706

Carbon Catalyzed Natural Gas Processing ... 707

Carbon Foam Based NOx Biofilter ... 708

Closed Cycle Valved Cell Heat Engine ... 709

Construction and Testing of a High-Efficiency Solar Water Still ... 710

Controlling Fouling with Rice Straw Blends in Biomass Boilers ... 711

Covell Village - A Model for Sustainable Communities ... 712

Demonstration of Energy Efficient Enhancement in Refrigeration Appliances by Incorporation of Practical, Low Cost Thermal Energy Storage ... 713

Desiccant Enhanced Indirect/Direct Evaporative Cooling System ... 714

Detecting Optimal Fan Pressure ... 715

Development of a Borehole Seismic Receiver Array for Geothermal Wells ... 716

Development of a Modular Scroll-Turbine-Based Organic-Ranking Cycle (ORC) ... 717

Development of an Effective Fire-Shield for Powerpoles by Custom Tailoring a Mineral Polymer Material 718

Development of Low Cost High Efficiency Heterojunction Organic Solar Cell Using Inkjet and Screen Printing Techniques 719

Development of Magnesium Diboride-Based Superconductor/Metal Matrix Composite Wire for use in Superconducting Transformers 720

Development of Single Fan Multi-Stack Exhaust Systems 721

Development of Universal Software for Dissolved Oxygen Control in the Activated Sludge Process 722

Distributed Generation Drivetrain for Windpower Application 723

Dry Steam Scrubbing for Impurity Removal from Geothermal Steam 724

Efficient Lighting by Sensing and Actuating with MEMS Smart Dust Motes 725

Emission Monitoring of Nitric Oxide with a Mid-IR Solid State Laser 726

End-Use Efficient, Environmentally Friendly Water Softening Device 727

Energy Efficient Municipal and Industrial Odor-Control Equipment Study 728

Energy Production from Bulk Wastewater 729

Fault Location Techniques for Distribution Feeders Containing Distributed Generation 730

Feasibility of a Hydrogen Blower Design for Fuel Cell Recirculation Applications 731

Field Feasibility Determination of a Novel Energy-Saving Refrigeration Controller 732

Field Validation of a Model of Generation and Migration of Methane and Other Gases in Landfills 733

Flexible Low Emissions Combustor for Renewable Fuels 734

Flywheel Energy Storage Units in Power Distribution Networks 735

Flywheel System for Bulk Energy Storage 736

Geothermal Reclaimed Water Turbine 737

Gyroton Rotary Engine Project: A Controllably Variable Compression and Displacement Rotary Engine 738

High Efficiency Lanthanide Doped Ceria-Zirconia Layered Hybrid Electrode for SOFC Generators 739

High Efficiency Organic Thin-Film Solar Cell 740

High Speed Light Activated On/Off Thyristor 741

Highly Conductive, Water Insoluble & Thermally Stable PEM from Functionalized POMs 742

High-Performance, Nanostructured Cathode for Li-ion Rechargeable Battery 743

High-Volume Manufacturing for Low-cost, Flexible Solar Cells 744

Hydrogen- Methane Waste Fermentations for Clean Electricity Generation 745

IEM's Low Cost Building Performance Infrared Camera 746

Improved Insulation for Buildings and Refrigeration 747

Improved Performance of Energy Recovery Ventilators Using Advanced Porous Heat Transfer Media 748

Industrial Energy Recycling Process and Products 749

Innovative Injection-Molded Plastic Package For High-Concentration PV Cells 750

Innovative Wheel Concept to Increase Gas Turbine Efficiency 751

Instant Snap-in Load Shed Device for Incandescent Lighting 752

Integrating Evaporative Cooling with Dynamic Insulation for Occupant Thermal Comfort 753

LEAMS (Low Emissions Atmospheric Metering Separator) 754

Low Cost Hybrid Inverters Utilizing IGBTs and SCRs 755

Low Cost Microchannel Reformer for Hydro Production from Natural Gas 756

Low Cost, Energy Saving Motor Controller for Residential and Industrial Buildings 757

Low-Cost, High Efficiency Solar Cell Fabrication Using Inkjet Printing 758

Materials for Fast-Response Solid Oxide Fuel Cells (SOFCs) 759

Methane Sensor for Control and Automation 760

Microturbine Based Building Energy System 761

Modeling of Chemical Processes in Geothermal Reservoirs 762

Nanostructured Electrodes for PEM Fuel Cells 763

New Generation Thermoelectric Materials for Power Generation and Refrigeration 764

New Membranes Based on Ionic Liquids for High Temperature PEM Fuel Cells 765

New Powerline Control Technology for Lighting and HVAC 766

Novel Nanocomposite Carbon Molecular Sieve (CMS) Membranes 768

Plastic Solar Cell 769

Plug-in Photovoltaic Receiver for Concentrator Applications 770

Pressure Reducing Valve Turbine 771

Printed Photovoltaic Images for Roofing 772

Prototype and Demonstration of a Light Emitting Diode (LED) Alternative to Screwbase Incandescent Lamps 773

Prototype and Demonstration of Vision-Tuned Fluorescent Lamps 774

Pulsed Ultrasound Water Treatment 775

Quantitative Building Cooling of Tile Roofs Coated with Solar IR Reflective Coatings . 776

Radio Frequency Electrostatic Ignition System Feasibility Demonstration 777

Real Time Energy Meter Radio Frequency Communications System 778

Reduced Cost Power Electronic Converter for Generator Applications 779

Research Energy Efficient Designs for Swimming Pool Pump Systems 780

Research on Manufacturing Quadruple-Junction Solar Cells 781

Sealing and Contacting to Novel Integrated Solid Oxide Fuel Cells 782

Self-Optimized Controllers for Air Conditioners 783

Single Crystal Silicon Sheet Growth 784

Solid State Electrolyte for Dye-Sensitized Solar Cells (DSSCs) 785

Steady State Security Assessment of Deregulated Power Systems 786

Test and Evaluation of Heat Transfer Parameters for CAES Tank System 787

Test Program for High Efficiency Turbine Diffuser 788

The DaySwitch 789

The Mamikon Spinner 790

The Sagebien Project 791

Ultra Reduced Emissions Burner for GTCC and CHP Applications 793

Unified Power Quality Conditioner Using One-Cycle Control 794

Use of Waste Fuel Gas to Reduce Biofouling of Power Plant Cooling Water Intakes .. 795

Ventilation Cooling Controller Strategies 796

EISG Projects Completed in 2005 797

A New Gas Turbine Engine Design for Electricity Generation with Increased Efficiency & Power 798

Composite Architectures for Sub-600C Solid Oxide Fuel Cells 801

Corrosion Resistant Coating for Carbonate Fuel Cell Components 803

Development of a PEM Electrolyzer: Enabling Seasonal Storage of Renewable Energy 805

Development of Optimum Design Configuration and Performance for Vertical Axis Wind Turbine 807

Energy-Efficient Process for Using Membrane Technology to Treat and Recycle Agricultural Drainage Water 810

Evaluation of New Solar Air-Conditioning System 813

Improvement of Rechargeable Li-ion Batteries Performance by Surface Modification of the Cathode 816

Integral Catalytic Combustion/Fuel Reforming for Gas Turbine Cycles 819

Method of Improving Efficiency of Combined Cycle Power Plants 822

Omni SmartPump 824

Omni-Directional Insect Eye Concentrator Using a Hyper-Spectral Photovoltaic Cavity Converter (PVCC) 827

OTM Aided Oxygen Enhanced Combustion 830

Polymer-Zeolite Nanocomposite High-Temperature Proton-Exchange-Membranes for Fuel Cells 833

Proof-of-Concept of a Dual-Fired (Solar and Natural Gas) Generator for Use n a Space Cooling System for Residential and Commercial Buildings 836

Simple and Reliable Active Power Filter for Energy Efficiency and Power Quality 839

SunGuard Roofing Tile for Natural Cooling 842

Two-Phase Flow Turbine for Co-generation 845

EISG Projects Completed in 2004 848

An Integrated Anti-Fouling Technology for Energy Efficient Chillers 849

Cost Effective Lost Distortion Adjustable Speed Drive 852

Flat-Plate Micro-Dish Photovoltaic Concentrator Module 853

Solar Fired, Compressor Assisted Absorption Chiller 854

Spectrally Enhanced Incandescent Ceramic Incandescent Emitter..... 857

EISG Projects Completed in 2003 860

Biomass Boundary Layer Turbine Power System..... 861

Catalytic Stabilizer for Industrial Gas Turbines 864

Counter Rotating Wind Turbine System..... 868

Dev/Char of Improved Dye-Sensitized Nanocrystalline Solar Cells..... 871

Direct Operation of Solid Oxide Fuel Cells on Natural Gas 874

Energy Shaver-Thermal Energy Storage Device for Air Conditioner 877

Energy-Efficient Air-Handling Controls..... 880

Increasing Efficiency of Geothermal Energy Generation with High Resolution Seismic Imaging..... 883

Modeling Greenhouse Temperature for Energy Efficient Production..... 885

Non-Vacuum Thin-Film Photovoltaics Processes 887

Novel Composite Membranes for Fuel Cells..... 890

EISG Projects Completed in 2002 892

Anaerobic Pump..... 893

Control of On-Off Equipment in Buildings 896

Development of a Unique Gas Generator for a Non-Polluting Power Plant..... 899

High Efficiency Single Phase Air Conditioner 902

Renewable Hydrogen Fuel Production by Microalgal Photosynthesis..... 905

Ventilation Measurement and Control..... 908

EISG Projects Completed in 2001 911

Electrosynthesis of Device Quality Semiconductor Films 912

Improved Operational Turndown of an Ultra-Low Emission Gas Turbine Combustor . 915

Process for Converting Sewage Sludge& Municipal Solid Wastes to Clean Fuels..... 918

Residential and Commercial Buildings End-Use Efficiency (BLDGS) Multi-Year Projects Started in 2005

2008 Building Efficiency Standards Research

The Problem	Field studies and model development research is needed in the areas of residential attics, indirect-direct evaporative coolers, residential air handler fans and ventilation technologies before improvements to the Title 24 Building Energy Efficiency Standards can be made.
Proposed Research	The objectives of this project are to develop and introduce a new residential attic model for use in standards development and compliance, produce a compliance option for indirect direct evaporative cooling systems, produce revised residential ventilation requirements and accompanying models for use in standards development and compliance, and explore options for developing standards for the energy efficiency of air handler fans in residential heating, ventilation and air conditioning (HVAC) equipment.
Research Justification and Goals	Supports California's goal to adopt new building standards for implementation in 2008 that include, among other measures, cost effective demand response technologies and integrated photovoltaic systems per the Energy Action Plan 2005; and to improve new and remodeled building efficiency by 5 percent per the Energy Action Plan 2003 by: • Providing research results that will facilitate changes to the Building Energy Efficiency Standards.
Contractor	Bruce Wilcox
Site Location	Berkeley, CA
PIER Manager	Martha Brook P.E.

This project is being conducted by the California Energy Commission's Public Interest Energy Research (PIER) program. PIER supports energy research and development that improves the quality of life in California by bringing environmentally safe, affordable, and reliable energy services and products to the marketplace.

2008 Title 24 Codes & Standards Enhancement for Residential Cool Roofs

The Problem	Cool roofs, which have a high reflectivity combined with high thermal emissivity, have the potential to save energy, reduce peak demand and improve air quality in the hot, sunny climate of California. However, residential consumers and roofing contractors have very little awareness of and in some cases little interest in the potential benefits of cool roofs. Roofing products, especially composition shingles, are sold as commodity largely on the basis of lowest cost.
Proposed Research	This project will utilize information from monitoring studies as wel as public workshops to develop a Codes and Standards Enhancement (CASE) proposal for the 2008 revision of California Title 24. The development of residential energy standards can help to establish cool roofs in the marketplace, which is necessary for success of the manufacturers of these products. If enacted this code change will encourage the adoption of colored cool roof technology in the residential, high slope building sector.
Research Justification and Goals	Supports California's goal to adopt new building standards for implementation in 2008 that include, among other measures, cost effective demand response technologies and integrated photovoltaic systems per the Energy Action Plan 2005; and to develop strategies to achieve additional savings in existing buildings per the Integrated Energy Policy Report 2003 by: • Developing an enhancement proposal for the 2008 revision of Title-24 to motivate the incorporation of cost-effective cool roofing material into the California residential building market. • Conducting workshops to solicit public and industry input to gain the widest possible perspective on costs, benefits and consequences of a Title 24 code change. This project also addresses Section 25620 (c) of the Warren-Alquist act which states that it is appropriate for the state to undertake public interest energy research … projects that are not adequately provided for by competitve and regulated energy markets..
Contractor	Department of Energy, Lawrence Berkeley National Laboratory
PIER Manager	Chris Scruton

This project is being conducted by the California Energy Commission's Public Interest Energy Research (PIER) program. PIER supports energy research and development that improves the quality of life in California by bringing environmentally safe, affordable, and reliable energy services and products to the marketplace.

Affordable Multi-Family Zero Energy New Home (ZENH) Project

The Problem	Approximately 50% of multifamily affordable housing developments constructed annually incorporate energy efficiency measures that exceed Title 24 by 15%, but only an estimated 2% incorporate renewable energy systems. The reasons for this low level of PV usage include the perception that PV is high-cost, technically complex, and requires significant altrerations to the building design and construction.
Proposed Research	This project entails the design of two multi-family affordable housing units in order to demonstrate the feasibility of building low-cost housing that incorporates high-level efficiency and photovoltaic systems. This project will further develop financial instruments to address funding issues associated with housing that incorporates these features. Finally, this project seeks to address current knowledge gaps relating to the benefits and feasibility of energy efficiency and PV systems.
Research Justification and Goals	Supports California's goal to expand efforts to improve public awareness and adoption of energy efficiency measures per the Energy Action Plan 2005; and to leverage energy efficiency improvements for new and existing buildings per the Integrated Energy Policy Report 2004 Update by: • Demonstrating the viability of the zero energy new home (ZENH) approach in the multi-family affordable housing sector. • Furthering the development of innovative business models for ZENH, specifically in the multi-family affordable housing sector. • Implementing several affordable ZENH to sere as examples and to provide monitoring data.
Contractor	Global Green USA
PIER Manager	Cheri Davis

This project is being conducted by the California Energy Commission's Public Interest Energy Research (PIER) program. PIER supports energy research and development that improves the quality of life in California by bringing environmentally safe, affordable, and reliable energy services and products to the marketplace.

Battery Charger and Power Supply Standards Evaluation

The Problem	Over the last two decades, numerous new portable electronic products have been introduced into the consumer marketplace and are growing steadily in popularity. Today, over 600 million products that contain battery chargers are currently in use in America's homes and offices. These products offer substantial economic and environmental advantages over products powered by throwaway batteries and are more convenient than corded products. However, each rechargeable product contains an AC-DC power supply, battery-charging circuitry, and low voltage electronics whose total electricity consumption varies widely from product to product. Research is needed to improve the overall efficiency of these products.
Proposed Research	This research will identify the technical opportunities and policy strategies that will improve battery charger efficiency and power supply efficiency in a variety of consumer electronics. The team will meet this goal by researching and characterizing the battery charger and power supply market; by gaining industry consensus on how to measure and report battery charger efficiency and internal power supply efficiency; by analyzing the energy consumption and savings potential of products that use battery chargers and internal power supplies; and by creating voluntary and mandatory energy and environmental policy recommendations that would potentially benefit Californians through lower energy bills.
Research Justification and Goals	Supports California's goal to adopt new appliance standards by 2006, supplementing those adopted in December 2004 per the Energy Action Plan 2005 by: • Reducing energy costs by promoting technology, which will reduce both overall energy use and peak loads.
Contractor	Ecos consulting
PIER Manager	Bradley Meister P.E.

This project is being conducted by the California Energy Commission's Public Interest Energy Research (PIER) program. PIER supports energy research and development that improves the quality of life in California by bringing environmentally safe, affordable, and reliable energy services and products to the marketplace.

Commercial Gas Fryer for Food Service

The Problem	Deep fat fryers are one of the most common types of cooking equipment in restaurants today. Approximately 200,000 gas fryers are used in California and account for about 200 million therms of natural gas per year. Conventional gas fryers vary greatly in efficiency. While the most efficient gas fryers on the market have an Energy Star rating average of 57% cooking efficiency, the typical fryer cooking efficiency is well below that value.
Proposed Research	This purpose of this project is to design, develop and test a commercially viable gas fryer that reduces energy costs, improves performance, and reduces oil consumption. The contractor will develop specifications and fryer designs concepts; fabricate, assemble, and bench test the fryer; and then conduct computational fluid dynamics tests to analyze both heat transfer and combustion. A prototype fryer will be built and tested according to ANSI and ASTM standards. The contractor will also develop a California market transformation plan outlining activities that Pitco, the key partner, can use to introduce the new gas fryer product.
Research Justification and Goals	Supports California's goal to optimize all strategies for increasing conservation and energy efficiency to minimize increases in electricity and natural gas demand per the Energy Action Plan 2003 by: • Developing a gas fryer that reduces energy costs, improves performance, and reduces oil consumption.
Contractor	Gas Technology Institute
Site Location	Des Plaines, IL
PIER Manager	Chris Scruton

This project is being conducted by the California Energy Commission's Public Interest Energy Research (PIER) program. PIER supports energy research and development that improves the quality of life in California by bringing environmentally safe, affordable, and reliable energy services and products to the marketplace.

Commercializing Zero Energy New Home Communities

The Problem	Historically, new home developers have resisted installing PV systems because of high initial cost, aesthetics, and disruption to their production schedule. This has occurred because PV and energy efficiency have been considered in isolation. Optimized integrated solutions can reduce house electric loads to the point where right-sized PV systems can now reduce net peak summer electric loads to near zero for zero energy new homes (ZENH) at an economically viable cost. To date, these barriers have not yet been addressed by the market due to the investment needed to develop and demonstrate the least cost combined with innovative marketing sales and finance.
Proposed Research	The purpose of this project is to use innovative and cost effective combinations of building energy efficiency and photovoltaic strategies in new housing developments to help reduce homeowner cost, energy use and summer peak electricity demand in California. Another goal of this project is to integrate new business model approaches with demonstrations of innovative zero energy new homes (ZENH) designs to overcome cost and implementation barriers and help make ZENHs a mainstream part of California new home construction.
Research Justification and Goals	Supports California's goal to optimize energy conservation and resource efficiency per the Energy Action Plan 2003; and adds a project to the Commissions research portfolio that provides for the future market utilization of projects funded through the program as mandated by the Warren-Alquist Act by: • Employing a turn-key systems approach using proven energy efficiency and building integrated PV systems combined with innovative sales to develop robust ZENH industry in California and beyond.
Contractor	Powerlight Corporation
Site Location	Berkeley, CA
PIER Manager	Hassan Mohammed M.E.

This project is being conducted by the California Energy Commission's Public Interest Energy Research (PIER) program. PIER supports energy research and development that improves the quality of life in California by bringing environmentally safe, affordable, and reliable energy services and products to the marketplace.

Demand Response Evaluation Methodology and PCF CASE Inititative Activities: J Carlos Haiad/DES

The Problem	Determine if Programmable Communicating Thermostats are cost effective and feasible to integrate into the 2008 Building Standards
Proposed Research	A. Evaluation of the Economic Benefits of Demand Response for the 2008 California Building Energy Efficiency Standards B. Feasibility of Integrating Programmable Communicating Thermostats for the 2008 California Building Energy Efficiency Standards C. Support of Programmable Communicating Thermostat CASE Initiative
Research Results	Two reports under Part A are currently being reviewed. These reports include one that focuses on the equations and methodology used to develop the approach and specific formulae used to compute the benefits of demand response and energy efficiency in Title 24 and a report that documents the input data assumptions and provides web links to the output files and the spreadsheets used to create the Time Dependent Valuation (TDV) values. To date we have also received a draft report under Part B. Part C, the CASE initiative, is still in work.
Research Justification and Goals	• Reducing energy costs by promoting technology, which will reduce both overall energy use and peak loads.
Contractor	The Regents of the University of California - Office of the President/CIEE
PIER Manager	Bradley Meister P.E.

This project is being conducted by the California Energy Commission's Public Interest Energy Research (PIER) program. PIER supports energy research and development that improves the quality of life in California by bringing environmentally safe, affordable, and reliable energy services and products to the marketplace.

Develop Recommendations to Improve Hot Water Equipment and System Efficiencies in California Homes

The Problem	More than 10 million California homes heat water with natural gas. Water heating accounts for over 40% of all natural gas used in California homes. Specific research efforts need to be made to inform the Building Energy Efficiency Standards in the areas of multi-family water heating, hot water pipe losses, single family water heating construction practices, and hot water distribution system modeling.
Proposed Research	This project will include several research tasks with the purpose of increasing the energy and water efficiency of residential water heaters and hot water distribution systems (HWDS). The first tasks focus on providing HWDS data, analyses, and recommendations to the 2008 Title 24 Residential Building Energy Efficiency Standards proceeding. The second set of tasks consists of three pilot phase or feasibility studies that will be used to plan future RD&D projects to assess residential hot water usage patterns, and to improve the efficiency of water heating technologies and distribution systems.
Research Justification and Goals	Supports California's goal to adopt new building standards for implementation in 2008 that include, among other measures, cost effective demand response technologies and integrated photovoltaic systems per the Energy Action Plan 2005; and to improve new and remodeled building efficiency by 5 percent per the Energy Action Plan 2003 by: • Improving the efficiency of water heaters and hot water distribution systems in California.
Contractor	Department of Energy, Lawrence Berkeley National Laboratory
PIER Manager	Martha Brook P.E.

This project is being conducted by the California Energy Commission's Public Interest Energy Research (PIER) program. PIER supports energy research and development that improves the quality of life in California by bringing environmentally safe, affordable, and reliable energy services and products to the marketplace.

Development of Recommendations to Integrate Emerging Technologies into the 2008 Nonresidential Standards

The Problem	The PIER Buildings program has a large portfolio of completed reseach on technologies with potential to be included in the development of the 2008 Energy Efficiency Standards. Unfortunately, not all energy efficiency research is directly compatible with the Building Energy Standards and there are many differing implementation avenues. To increase the effectiveness of PIER research for Californians, the program needs to obtain a review from an acknowledged expert in building energy standards compliance. The project is currently developing detailed recommendations for as many PIER research products as possible before the 2008 Standards development process ends.
Proposed Research	The purpose of this project is to use EnergySoft's extensive experience in California's Building Energy Efficiency Standards to evaluate finished PIER Buildings' products that are thought to be ready for adoption into the 2008 Standards. The evaluation will develop detailed 2008 Standards recommendation reports for each reviewed PIER product. This project also funds EnergySoft to comprehensively review the existing set of ACM (Alternative Calculation Method) test files that are used in the performance-based nonresidential compliance approach and to develop a detailed development report on how to bring the test files to current modeling standards.
Research Justification and Goals	Supports California's goal to transform RD&D projects on energy efficiency technologies into energy efficiency tools and standards per the Energy Action Plan 2005; and to adopt new building standards for implementation in 2008 that include, among other measures, cost effective demand response technologies and integrated photovoltaic systems per the Energy Action Plan 2005 by: • Developing change proposals, one for each reviewed PIER product, for the 2008 Standards to be used in 2008 Standards development analyses and public workshops. • Developing an ACM (Alternative Calculation Method) Reference Test development report. - A summary of recent developments in the 2005 ACM reference test files. - Written recommendations for test file revisions with the intent to better represent current practices in the building modeling industry.
Contractor	EnergySoft, LLC
Site Location	Novato, CA
PIER Manager	Norm Bourassa

This project is being conducted by the California Energy Commission's Public Interest Energy Research (PIER) program. PIER supports energy research and development that improves the quality of life in California by bringing environmentally safe, affordable, and reliable energy services and products to the marketplace.

Green Building Studio Enhancement

The Problem	Most designers will not consider the energy use of a building design until very late in the process when many energy efficiency strategies are no longer cost-effective to implement. In an earlier PIER-funded research project, Green Building Studio, Inc. (formerly named GeoPraxis, Inc.) developed and launched a commercially viable web service named Green Building Studio (GBS) to provide architects with a rapid energy analysis tool for the conceptual design phase of a design project. Research is needed to add design alternatives to the product to increase its usefulness in planning energy efficiency improvements.
Proposed Research	The purpose of this project is to add design alternatives functionality to the Green Building Studio (GBS) web service. This addition will give GBS the capability to provide users multiple design iterations within the same GBS project, greatly facilitating side-by-side energy performance comparisons of design changes.
Research Results	Previous PIER projects supporting this work are available for download at: http://www.energy.ca.gov/pier/final_project_reports/500-02-027f.html http://www.energy.ca.gov/pier/final_project_reports/500-02-038f.html The working web service is located at:
Research Justification and Goals	Supports California's goal to improve new and remodeled building efficiency by 5 percent per the Energy Action Plan 2003; and to optimize all strategies for increasing conservation and energy efficiency to minimize increases in electricity and natural gas demand per the Energy Action Plan 2003 by: • Reducing California's energy consumption by providing building designers with a way to easily estimate building energy performance while the design is in process. • Providing business cost savings for the Californian building design community by facilitating rapid online sharing of design project information between the various vendors. - For example, reducing the time and cost for conducting architectural drawing take-offs for the HVAC designer, energy code consultant, and/or the energy analyst.
Contractor	Green Building Studio, Inc.
Site Location	Petaluma, CA
PIER Manager	Norm Bourassa

This project is being conducted by the California Energy Commission's Public Interest Energy Research (PIER) program. PIER supports energy research and development that improves the quality of life in California by bringing environmentally safe, affordable, and reliable energy services and products to the marketplace.

Integrating Building Commissioning into the State Building Construction Process

The Problem	New State buildings often do not operate as intended, wasting energy, decreasing equipment life, and reducing the productivity and comfort of the building occupants. The goal of this project is to improve the realization and persistence of proper operation and resource efficiency in new State buildings, resulting in lower energy use, lower operation and maintenance costs to the State, longer building life and greater worker productivity and user comfort.
Proposed Research	The objective of this project is to increase the quantity and consistency of commissioning services used by the Department of General Services' (DGS) Real Estate Services Division during their new building construction processes. Project staff will work closely with key staff and management within DGS to develop procedures, protocols and specifications for commissioning new State buildings that can be integrated with and implemented through DGS procedures and personnel. In addition, this project will provide information on the costs and benefits of commissioning State buildings for use by DGS in justifying personnel and procedural changes to the State's building construction processes.
Research Justification and Goals	Supports California's goal to implement actions outlined in the Governor's Green Buildings Action Plan to improve building performance and reduce grid-based electrical energy purchases in all State and commercial buildings by 20 percent by 2015 per the Energy Action Plan 2005; and to make every new State building a model of energy efficiency per the Energy Action Plan 2003 by: • Creating a framework and process for commissioning projects constructed by the State of California Department of General Services (DGS), thereby improving performance and reducing energy consumption. • Creating commissioning procedures and processes that can be used by other organizations within California.
Contractor	Architectural Energy Corporation
Site Location	Marysville, CA
PIER Manager	Norm Bourassa

This project is being conducted by the California Energy Commission's Public Interest Energy Research (PIER) program. PIER supports energy research and development that improves the quality of life in California by bringing environmentally safe, affordable, and reliable energy services and products to the marketplace.

Next Generation Instantaneous Water Heater

The Problem	Gas-fired instantaneous water heaters are a highly efficient water heating technology that can play an important role in reducing energy consumption, however many barriers exist to the technology. Research is warranted to determine if the current state-of-the-art instantaneous water heaters can meet both current and projected California domestic hot water needs, and to identify technology that can be incorporated into instantaneous water heaters to overcome current market and technical barriers.
Proposed Research	The contractor will provide a review of available information on current instantaneous water heaters and conduct stakeholder interviews to identify technical and market barriers affecting the adoption of the technology in California. Current instantaneous water heater technology will be evaluated along with the market potential and energy savings. The contractor will recommend next-generation instantaneous water heater technology that can be successful in the California market.
Research Justification and Goals	Supports California's goal to optimize all strategies for increasing conservation and energy efficiency to minimize increases in electricity and natural gas demand per the Energy Action Plan 2003 by: • evaluating instantaneous water heater technology in the California marketplace, project potential market growth and energy savings and recommend strategies for wider adoption in the California marketplace.
Contractor	Gas Technology Institute
Site Location	Des Plaines, IL
PIER Manager	Chris Scruton

This project is being conducted by the California Energy Commission's Public Interest Energy Research (PIER) program. PIER supports energy research and development that improves the quality of life in California by bringing environmentally safe, affordable, and reliable energy services and products to the marketplace.

Phase 3 Research into Low Power Modes: Statewide Survey

The Problem	Recent Energy Commission research has shown that energy use for residential electronic equipment operating in standby/low-power modes is about 100 watts per home, higher than the 70 watts estimated in earlier Commission research. This is roughly 15% of a homeowner's electric use, or about the size of a new, high-efficiency refrigerator. State wide the total use could be nearly 1000 megawatts for the residential sector. Early research has shown that a large portion of this power—perhaps 50%—could be saved, but the savings magnitude and target areas are not well enough defined to implement performance standards or confidently pursue appropriate research projects.
Proposed Research	This project will identify target technologies by 1) applying a new data collection protocol at approximately 75 California homes, and 2) supplementing this on-site survey with a phone survey of 350 California homes. The resulting data will be the largest such survey ever conducted in the world and will be invaluable in identifying additional research needs related to reducing electronic equipment energy use in low power mode operation.
Research Justification and Goals	Supports California's goal to leverage energy efficiency improvements for new and existing buildings per the Integrated Energy Policy Report 2004 Update by: • Developing improved estimates of the total number of power supplies in use and their total energy consumption • Collecting and disseminating a substantial volume of efficiency test data • Reducing energy costs by promoting technology, which will reduce both overall energy use and peak loads.
Contractor	Department of Energy, Lawrence Berkeley National Laboratory
PIER Manager	Bradley Meister P.E.

This project is being conducted by the California Energy Commission's Public Interest Energy Research (PIER) program. PIER supports energy research and development that improves the quality of life in California by bringing environmentally safe, affordable, and reliable energy services and products to the marketplace.

Super Efficient Gas Water Heating Appliance Initiative

The Problem	More than 10 million California homes heat water with natural gas. Water heating accounts for over 40% of all natural gas used in California homes. Conventional residential gas water heaters use a simple but antiquated design that wastes energy.
Proposed Research	This effort will fund the first phase of the Super Efficient Gas Water Heater Appliance Initiative (SEGWHAI), to develop the foundation for this multi-year initiative. This work will include the technical and market analyses necessary to determine the best ways to facilitate achieving a 30% efficiency improvement in gas water heaters. At the end of this first year, this initiative should be at the beginning of the prototype development stage.
Research Justification and Goals	Supports California's goal to develop strategies to achieve additional savings in existing buildings per the Integrated Energy Policy Report 2003 by: • Develop cost-effective replacement water heaters with energy savings of approximately 30% compared to new conventional units with a 50% reduction in nitrogen oxide (NOx) emissions. • Building partnerships with gas utilities, manufacturers, gas trade associations, national energy efficiency organizations, as well as US DOE and EPA. • Assessing manufacturer interest and capabilities. • Documenting probable pathways for gas water heater technology improvements. • Assessing the potential for energy and environmental benefits.
Contractor	Valley Energy Efficiency Corporation
PIER Manager	Martha Brook P.E.

This project is being conducted by the California Energy Commission's Public Interest Energy Research (PIER) program. PIER supports energy research and development that improves the quality of life in California by bringing environmentally safe, affordable, and reliable energy services and products to the marketplace.

Three Year Collaborative Research with Lighting Research Center

The Problem	There is a wealth of knowledge that exists within the lighting research community. It would be beneficial for PIER to gain access to the knowledge and to join with significant collaborators in the lighting research community to share information and coordinate research activity. By affiliating with the Lighting Research Center at Rensselaer Polytechnic Institute, the California Energy Commission participates in a collaborative research program that accesses the latest information on energy-efficient lighting technologies and issues.
Proposed Research	Collaborate in the Lighting Research Center (LRC) Partnership program in order to help steer the direction of research and take advantage of the LRC's R&D efforts in many areas of lighting research such as human responses to indoor and outdoor lighting and lighting technology evaluation. PIER will also be able to leverage the research funds of other entities in helping to solve California's energy efficiency needs.
Research Results	For an accounting of projects in progress please go to:
Research Justification and Goals	Supports California's goal to leverage energy efficiency improvements for new and existing buildings per the Integrated Energy Policy Report 2004 Update by: • Offering lighting-system owners lower-cost, higher-value lighting. • Obtaining the latest information on energy-efficient lighting technologies to benefit California's need to achieve energy savings from lighting in new and existing buildings. • Working in partnership with other government agencies, academia, industry and leading-edge experts in the field to gain maximum advantage from California's investments in lighting research.
Contractor	Rensselaer Polytechnic Institute
Site Location	Troy, NY
PIER Manager	Michael Seaman

This project is being conducted by the California Energy Commission's Public Interest Energy Research (PIER) program. PIER supports energy research and development that improves the quality of life in California by bringing environmentally safe, affordable, and reliable energy services and products to the marketplace.

Utility-Focused Market Model for Zero Energy New Homes

The Problem	The average new home consumes 8,500 kWh per year and adds 3-4 kW to peak demand. USDOE's Build America program has sponsored demonstrations of highly efficient homes with PV panels to generate electricity. These homes promise to reduce the burden that new homes place on the utility grid, but their additional cost coupled with a general lack of understanding of their merits are barriers to wide-spread acceptance of this concept. The challenge is to increase awareness of the benefits of ZENHs and create market mechanisms that will sustain their development into the future.
Proposed Research	This project will explore business models for development, design, construction, financing, and ownership of ZENHs so that ZENHs may become a mainstream component of new home construction. This contractor will: -Design and demonstrate ZENH concepts in a subdivision -Develop commissioning guidelines to ensure the homes meet design and performance specifications -Develop market models for PV ownership to be implemented during the demonstration project -Monitor performance of the market model -Evaluate performance of the homes relative to the ZENH goals and benefits to the electric utility -Develop improved market models for a utility pilot program
Research Justification and Goals	Supports California's goal to expand efforts to improve public awareness and adoption of energy efficiency measures per the Energy Action Plan 2005; and to meet the accelerated 20 percent eligible renewable goal by 2010 and a longer-term goal of 33 percent by 2020 per the Integrated Energy Policy Report 2004 Update by: • Exploring the risks and benefits of zero energy new homes (ZENHs) to electric utilities and other stakeholders. • Developing sustainable business models for development, design, construction, financing, and ownership of ZENHs so that ZENHs may become mainstream construction in California. • Developing mechanisms to reduce the cost of ZENHs and create market structures that incent market players to develop and offer ZENHs to homebuyers.
Contractor	Architectural Energy Corporation
PIER Manager	Cheri Davis
	This project is being conducted by the California Energy Commission's Public Interest Energy Research (PIER) program. PIER supports energy research and development that improves the quality of life in California by bringing environmentally safe, affordable, and reliable energy services and products to the marketplace.

BLDGS Active Projects from Previous Years

Advancement of Electrochromatic Windows

The Problem	Electrochromic windows can be controlled electrically to vary the level of tint. They can become clear when it is dim outside and darkened when direct sun is entering. This ability can reduce electric lighting needs and improve visual comfort, but the key is integrating lighting controls with the window tint control. Before architects and engineers can properly use these windows, they need to understand how the integrated lighting and window system should be controlled for energy and glare reduction. They also need confidence in the performance and reliability of these windows.
Proposed Research	This project is examining the issues of integrated lighting control with window tint control in the context of visual comfort and energy efficiency, as well as the overall performance of electrochromic windows using a specially designed test facility. It will provide an assessment of the technology and essential information for designers and architects to understand and use these windows. It will provide feedback to the window manufacturers on issues of control accuracy, reliability, and physical characteristics such as opacity.
Research Results	The project developed a purpose -built facility for comparing the energy and visual impacts of the electrochromic windows. The researchers evaluated visual comfort, integrated lighting controls, and energy impacts within the space. They provided valuable feedback to the manufacturers of the windows and guidance for those who would utilize the windows in buildings.
Research Justification and Goals	Supports California's goal to implement actions outlined in the Governor's Green Buildings Action Plan to improve building performance and reduce grid-based electrical energy purchases in all State and commercial buildings by 20 percent by 2015 per the Energy Action Plan 2005; and to leverage energy efficiency improvements for new and existing buildings per the Integrated Energy Policy Report 2004 Update by: • Evaluating the energy and glare reduction impacts of electrochromic windows in perimeter spaces. • Developing integrated window-lighting controls necessary to reap the benefit of the technology. • Developing design guides for architects and engineers who must understand how to use the windows.
Contractor	Department of Energy, Lawrence Berkeley National Laboratory
PIER Manager	Chris Scruton

This project is being conducted by the California Energy Commission's Public Interest Energy Research (PIER) program. PIER supports energy research and development that improves the quality of life in California by bringing environmentally safe, affordable, and reliable energy services and products to the marketplace.

AHU/VAV Diagnostics

The Problem	Air handler performance assessment rules and air terminal unit diagnostics software were developed at National Institute for Standards and Technology for effective diagnostics on various types of equipment. The software was written for a variety of controllers using the public standard BACnet protocol. There is a need to develop default parameters for the detection software to avoid false positives while still adequately detecting faults. There is also a need to provide technical assistance for controls companies which may want to incorporate the diagnostic software into their product offerings.
Proposed Research	Researchers at the National Institute for Standards and Technology are developing diagnostics for air handlers and air terminal equipment that can be readily implemented by controls companies. Technical assistance and field trials are being conducted to work the bugs out of this system and help the controls companies to implement the diagnostics within their product lines.
Research Results	Diagnostics have been made available in the product lines from several manufacturers. Reasonable default levels and adjustable levels of sensitivity have been implemented. The ability of the diagnostics to successfully detect faults has been demonstrated to the manufacturers and to end users.
Research Justification and Goals	Supports California's goal to leverage energy efficiency improvements for new and existing buildings per the Integrated Energy Policy Report 2004 Update; and to improve new and remodeled building efficiency by 5 percent per the Energy Action Plan 2003 by: • Developing reasonable default parameters for Air Handler and Air Terminal Unit diagnostics to make implementation easy for controls companies. • Assisting controls companies to understand the diagnostics and implement them in their product lines.
Contractor	Architectural Energy Corporation
PIER Manager	Chris Scruton

This project is being conducted by the California Energy Commission's Public Interest Energy Research (PIER) program. PIER supports energy research and development that improves the quality of life in California by bringing environmentally safe, affordable, and reliable energy services and products to the marketplace.

ARTU

The Problem	Package air conditioning units are the most common type and have the largest installed tonnage in the commercial sector. Although these units might be expected to be efficient over their lifetime, surveys indicate that a majority of them have undetected malfunctions, particularly in air-side economizers, which greatly degrade their performance. There is a need for an advanced roof-top package unit which has a variety of features to make its performance more robust.
Proposed Research	The advanced roof-top unit, or ARTU, is a development project to design a prototype with a set of features making it more resistant to breakdowns. Once these features have been identified and the unit has been built and tested, the Consortium for Energy Efficiency, an association of utilities and efficiency advocates, will be encouraged to adopt the specification for an advanced performance tier. Utilities may then provide incentives for units meeting the specification to be installed, which encourages manufacturers to build them.
Research Results	A set of features for the advanced roof top unit has been specified. A large manufacturer of roof top units is actively participating in the project. The Consortium for Energy Efficiency has been engaged to participate in the project. Design and fabrication of the unit is soon to begin.
Research Justification and Goals	Supports California's goal to leverage energy efficiency improvements for new and existing buildings per the Integrated Energy Policy Report 2004 Update; and to improve new and remodeled building efficiency by 5 percent per the Energy Action Plan 2003 by: • Defining, designing, fabricating, and testing a rooftop unit with advanced features making it less prone to breakdowns and efficiency degradation. • Encouraging the Consortium for Energy Efficiency to adopt the ARTU definition as an advanced tier specification. • Encouraging manufacturers to participate in the design process and to build units to meet the spec.
Contractor	Architectural Energy Corporation
PIER Manager	Chris Scruton

This project is being conducted by the California Energy Commission's Public Interest Energy Research (PIER) program. PIER supports energy research and development that improves the quality of life in California by bringing environmentally safe, affordable, and reliable energy services and products to the marketplace.

Building Commissioning - Innovation to Practice

The Problem	Building commissioning is the process of testing building systems to insure they work as designed and then making adjustments as needed usually before the building is occupied. It is widely recognized that two significant barriers prevent the widespread uptake of commissioning: (1) the need for tools and technologies that standardize and simplify commissioning approaches and reduce implementation costs; and (2) uncertainty about the cost savings and other benefits.
Proposed Research	The purpose of this project is to develop and introduce the market application of innovative, yet practical functional performance testing and diagnostic tools and training by commissioning agents and building owners in California, New York, Texas, Nebraska, Iowa, Oregon, Washington, Idaho, and Montana. To address these needs, the California Energy Commission (CEC) has teamed with the New York State Energy Research and Development Authority (NYSERDA), the Texas Engineering Experiment Station (TEES), the University of Nebraska-Lincoln (UNL), and the Oregon Department of Energy (ODOE), to implement a National Association of State Energy Officials project in the Building Technologies area.
Research Justification and Goals	Supports California's goal to leverage energy efficiency improvements for new and existing buildings per the Integrated Energy Policy Report 2004 Update; and to implement actions outlined in the Governor's Green Buildings Action Plan to improve building performance and reduce grid-based electrical energy purchases in all State and commercial buildings by 20 percent by 2015 per the Energy Action Plan 2005 by: • Providing tools and training for building commissioning providers that will translate into energy savings and improved building performance benefits to the commercial building industry.
Contractor	Portland Energy Conservation, Inc.
Site Location	Portland, OR
PIER Manager	Norm Bourassa

This project is being conducted by the California Energy Commission's Public Interest Energy Research (PIER) program. PIER supports energy research and development that improves the quality of life in California by bringing environmentally safe, affordable, and reliable energy services and products to the marketplace.

California Lighting Technology Center at the University of California, Davis

The Problem	Communication within the research community--including academic, industry, utility and non-profit organization researchers--concerning research into energy-efficient lighting is uncoordinated and inefficient. No one institution exists that can bring together diverse researchers and research organizations to capture the advantages and the strengths of each in a partnership environment.
Proposed Research	Establish the California Lighting Technology Center (CLTC) at University of California, Davis. The mission of the CLTC will be to advance the application of efficient lighting technologies through research, education and outreach. The CLTC will be a unique partnership between the National Electrical Manufacturing Association (NEMA), California utility companies, the California building industry, specific lighting corporations, the NRDC, the U.S. Department of Energy, and California universities and colleges to encourage the development and market adoption of energy-efficient lighting products.
Research Results	The California Lighting Technology Center (CLTC) at University of California, Davis as been established. For an accounting of projects in progress please go to:
Research Justification and Goals	Supports California's goal to leverage energy efficiency improvements for new and existing buildings per the Integrated Energy Policy Report 2004 Update by: • Fostering the application of energy efficient lighting, facilitating technology/market application technology, and developing lighting technology. • Developing and operating a full-scale lighting application laboratory for the application, development, and demonstration of next-generation lighting technologies. • Developing comprehensive in-house and outreach training programs in cooperation with industry, utility groups and government to complement demonstration and application labs.
Contractor	The Regents of the University of California - Davis, Lighting Technology Center
Site Location	Davis, CA
PIER Manager	Michael Seaman

This project is being conducted by the California Energy Commission's Public Interest Energy Research (PIER) program. PIER supports energy research and development that improves the quality of life in California by bringing environmentally safe, affordable, and reliable energy services and products to the marketplace.

Classroom HVAC: Improving Ventilation and Saving Energy

The Problem	The great majority of relocatable classrooms in California use wall mounted electric heat pumps. Most of these heat pumps have poor ventilation effectiveness, are noisy, and are not particularly energy efficient. Because they are noisy, many units are turned off which can create unhealthy IAQ for students. Research is needed to develop and demonstrate an innovative heat pump for relocatable classroom that will have energy, noise reduction and air quality advantages over current conventional systems.
Proposed Research	This project will develop, evaluate, and demonstrate a very practical heating, ventilation and air conditioning (HVAC) system for classrooms that provides classrooms effective continuous ventilation with less noise than current systems while saving energy. The specification of this system will be made public domain, and PIER will promote its acceptance into the market through interaction with our partner BARD and other key California school facilities stakeholders.
Research Results	On March 1, 2006, BARD held a meeting in Sacramento where the Quiet Climate II heat pump was unveiled to stakeholders. The unit will have a SEER of over 13.5, it will have three different levels of ventilation and can be ordered with a sound attenuation package that will reduce the sound to 32.7 dBA in ventilation mode.
Research Justification and Goals	Supports California's goal to maximize the energy efficiency potential of existing buildings per the Integrated Energy Policy Report 2003 by: • Improving indoor environmental quality (IEQ), health, and learning in classrooms using electrically powered heating, ventilation and air conditioning (HVAC) systems. • Maximizing the benefits of electricity use for ventilation.
Contractor	Department of Energy, Lawrence Berkeley National Laboratory
PIER Manager	Bradley Meister P.E.

This project is being conducted by the California Energy Commission's Public Interest Energy Research (PIER) program. PIER supports energy research and development that improves the quality of life in California by bringing environmentally safe, affordable, and reliable energy services and products to the marketplace.

Cool Ducts

The Problem	Many commercial and residential duct systems are constructed on the roof outside of the building thermal envelope. These ducts are heated by the sun, which reduces the efficiency of the air conditioning system. Coating exposed ducts with highly reflective and thermally emissive coatings may be a cost effective way to improve air conditioning system efficiency. Additionally, cool roofs may improve the efficiency of rooftop air conditioner systems by lowering the temperature of condenser and supply intake air.
Proposed Research	This project team will examine the efficiency improvements possible by coating exposed ductwork with cool coatings. They will also examine the improvements to system efficiency which result from the air conditioner being located on a cool rather than a standard roof. If significant benefits are found, proposals for Title 24 revisions will be made.
Research Results	Cool roofs were not found to have a significant impact on air conditioner efficiency. Cool-coated ducts were found to result in a 5% to 10% improvement in system efficiency, depending on the length of exposed ductwork. This was found to be cost effective for new construction where the cost of implementation is low. As a result of the findings, a Title 24 codes and standards enhancement initiative is being prepared for cool ducts.
Research Justification and Goals	Supports California's goal to leverage energy efficiency improvements for new and existing buildings per the Integrated Energy Policy Report 2004 Update by: • Quantifying the benefit of cool roofs on rooftop air conditioner efficiency. • Making proposals to amend the California Title 24 energy code if efficiency improvements justify it.
Contractor	Department of Energy, Lawrence Berkeley National Laboratory
PIER Manager	Chris Scruton

This project is being conducted by the California Energy Commission's Public Interest Energy Research (PIER) program. PIER supports energy research and development that improves the quality of life in California by bringing environmentally safe, affordable, and reliable energy services and products to the marketplace.

Cool Roof Colored Materials

The Problem	Traditionally, cool roofs have been white, in order to reflect more solar radiation, however they have not been acceptable to homeowners. In order to address markets which demand darker colored roofs, research is needed to develop and test roofing materials using special pigments which are highly reflective in the invisible infrared portion of the spectrum.
Proposed Research	The purpose of this project is to develop cool colored roofing materials. This project involves development and field testing of roofing materials using special pigments which are highly reflective in the invisible infrared portion of the spectrum. These materials reject a significant amount of solar radiation but retain a normal colored appearance. Composition shingles, concrete and clay tiles, and metal roofing materials will be developed in cool colors. Short and long-term monitoring of the materials in various climate zones will help assess life cycle costs and susceptibility to degradation.
Research Results	Products in all major categories (clay, concrete, composition, metal, wood) are currently being developed in collaboration with a broad range of industrial partners and tested for long-term performance in weathering test-beds across California. Some products have already entered the market.
Research Justification and Goals	Supports California's goal to leverage energy efficiency improvements for new and existing buildings per the Integrated Energy Policy Report 2004 Update by: • Reducing formation of photochemical smog indirectly by lowering the need for electrical generation on hot summer days. • Lowering demand on peak days. • Developing attractive roofing products that lower energy costs, improve indoor comfort, and are longer lasting.
Contractor	Department of Energy, Lawrence Berkeley National Laboratory
PIER Manager	Chris Scruton

This project is being conducted by the California Energy Commission's Public Interest Energy Research (PIER) program. PIER supports energy research and development that improves the quality of life in California by bringing environmentally safe, affordable, and reliable energy services and products to the marketplace.

Cooling Solutions Collaborative Program

The Problem	Electric demand is highest for cooling in summer, when requirements for natural gas are lower. There is a potential to use natural gas based cooling to help reduce peak electric demands.
Proposed Research	The purpose of this project is to conduct natural gas cooling options technology development and advanced field testing. Gas cooling provides an alternative to electric powered commercial cooling, potentially mitigating peak electric demand in the high-growth areas of California's hot dry valleys. Applicable technologies include both absorption cooling and gas-engine-based vapor compression cycles. This co-funded project has many gas utilities throughout the country taking part.
Research Results	The project investigated and evaluated several technologies for gas cooling, dehumidification and cogeneration. At current high gas prices gas-fired absorption cooling does not appear to be economically attractive. Stirling engines were also investigated for their potential as engine driven gas cooling systems. A Tecogen gas-fired cogeneration system was monitored for performance.
Research Justification and Goals	Supports California's goal to leverage energy efficiency improvements for new and existing buildings per the Integrated Energy Policy Report 2004 Update; and to improve new and remodeled building efficiency by 5 percent per the Energy Action Plan 2003 by: • Offering gas cooling options for the residential and commercial markets that can also reduce peak electric demand for all California consumers.
Contractor	Gas Technology Institute
PIER Manager	Chris Scruton

This project is being conducted by the California Energy Commission's Public Interest Energy Research (PIER) program. PIER supports energy research and development that improves the quality of life in California by bringing environmentally safe, affordable, and reliable energy services and products to the marketplace.

Demonstration of a New, High-Efficiency Air-Conditioning System

The Problem	Air-Cooled, packaged rooftop air conditioners dominate the air-conditioning market for retail buildings and other low-rise commercial space. Because of their wide application, they use large amounts of energy. In addition, they contribute to a large summer peak electrical demand, which greatly increases the need for extra generating capacity and transmission capacity. These problems are especially severe in rapidly growing inland areas of California, where peak ambient temperatures in excess of 110 F can severely degrade capacity and efficiency of the air conditioner.
Proposed Research	This project is to demonstrate a new air-conditioning system in a Southern California coffeehouse. The system, designed and patented by CoolSmart, LLC, shows promise for greatly reducing energy use and peak electric demand for cooling commercial buildings. The demonstration should also show if the system satisfies comfort and operating requirements for the building and identify remaining design issues for future work. CoolSmart's system differs from conventional air conditioning in that it separates dehumidification and sensible cooling, allowing for most of the cooling to be done at a higher evaporating temperature.
Research Results	An initial design has been made for Starbucks (the project's demonstration partner) located in Murietta, CA. The system will likely be installed in the April 2006 timeframe.
Research Justification and Goals	Supports California's goal to maximize the energy efficiency potential of existing buildings per the Integrated Energy Policy Report 2003 by: • Improving the energy cost/value of California's electricity by demonstrating a new, energy-efficient air-conditioning system that is suitable for use in commercial buildings. • Developing and demonstrating innovative heating, ventilation, and air conditioning (HVAC) systems.
Contractor	CoolSmart LLC
Site Location	Murietta, CA
PIER Manager	Bradley Meister P.E.

This project is being conducted by the California Energy Commission's Public Interest Energy Research (PIER) program. PIER supports energy research and development that improves the quality of life in California by bringing environmentally safe, affordable, and reliable energy services and products to the marketplace.

Effectiveness of UVC Technology for Improving School Performance

The Problem	California schools heating, ventilation and air conditioning (HVAC) systems are prime energy consumers during peak demand periods. They might also be a source of illness related to mold and mildew in these systems. Research is needed to develop and demonstrate innovative HVAC systems for State schools that have energy and air quality advantages over conventional systems.
Proposed Research	The purpose of this project is to determine if ultraviolet light in the "C" band (UVC) is effective in reducing heating, ventilation and air conditioning (HVAC)-related mold and mildew, thereby improving indoor environmental quality (IEQ) and energy savings. If a positive correlation between the UVC lights and student attendance or evidence of energy savings is found, the Contractor will then develop materials that can be disseminated to members of the building community. The Contractor will also research possibilities for future studies that will further quantify potential energy savings of the UVC technology through fieldwork and lab testing.
Research Justification and Goals	Supports California's goal to leverage energy efficiency improvements for new and existing buildings per the Integrated Energy Policy Report 2004 Update by: • Developing and demonstrating innovative heating, ventilation and air conditioning (HVAC) systems for California schools that provide healthier air while saving energy. • Providing design guidelines and objective product evaluation for cost-effective and energy efficient school HVAC systems.
Contractor	Architectural Energy Corporation
PIER Manager	Bradley Meister P.E.

This project is being conducted by the California Energy Commission's Public Interest Energy Research (PIER) program. PIER supports energy research and development that improves the quality of life in California by bringing environmentally safe, affordable, and reliable energy services and products to the marketplace.

Energy Efficient UC/CSU Campuses

The Problem	PIER-funded research efforts have produced technologies and practices ready for demonstration in order to validate performance in actual building applications. These R&D efforts have also produced pre-commercial research products that are in need of larger scale installations to better understand cost-effectiveness and market acceptance. The UC and CSU are ideal candidates for installing these pre-commercial research products and demonstrating emerging technologies developed in the PIER Buildings Program. This partnership will also create a unique opportunity for the PIER Buildings Program to employ California college campuses as a testbed for continuing current research in real-world environments.
Proposed Research	This program will improve the energy efficiency of California college campuses by implementing energy efficiency retrofits, facility retro- and continuous-commissioning, including extensive permanent energy monitoring at the building and subsystem level, and energy efficient education and best practices development and training.
Research Justification and Goals	Supports California's goal to maximize the energy efficiency potential of existing buildings per the Integrated Energy Policy Report 2003; and to develop strategies to achieve additional savings in existing buildings per the Integrated Energy Policy Report 2003 by: • Transferring PIER efficiency technology and practices to the California university campus sector. • Demonstrating PIER efficiency technology and practices in a richly monitored institutional facility environment. • Gaining new knowledge regarding the efficiency of institutional and commercial facilities through field R&D in PIER subject areas.
Contractor	The Regents of the University of California - Office of the President/CIEE
Site Location	Berkeley, CA
PIER Manager	Martha Brook P.E.

This project is being conducted by the California Energy Commission's Public Interest Energy Research (PIER) program. PIER supports energy research and development that improves the quality of life in California by bringing environmentally safe, affordable, and reliable energy services and products to the marketplace.

Field Study of the Impacts of Underfloor Air Distribution

The Problem	Underfloor Air Distribution (UFAD) systems use the open space (underfloor plenum) between the structural concrete slab and the underside of a raised floor system to deliver conditioned air directly into the occupied zone of the building. UFAD systems have the combined potential of energy savings, and health, comfort and productivity benefits. Research is critical to support the successful development of this important new direction in heating, ventilation and air conditioning system practices. It is important to document both the energy and non-energy benefits of this technology. This information will be useful to both public and private organizations responsible for funding commercial building construction.
Proposed Research	The California Energy Commission and the Department of General Services (DGS), through an Interagency Agreement, will jointly fund a field study of the impacts of underfloor air distribution in new office buildings. The Capitol Area East End Complex, a recently completed state office building construction project, will be the site for this field study. The Center for the Built Environment, a research organization within the University of California, Berkeley will conduct this field study under contract to DGS.
Research Justification and Goals	Supports California's goal to make every new State building a model of energy efficiency per the Energy Action Plan 2003; and to use sustainable energy and environmental designs in all State buildings per the Integrated Energy Policy Report 2003 by: • Providing critical guidance to California for future efforts in achieving energy-efficient, sustainable, and healthy buildings.
Contractor	California Department of General Services
Site Location	Sacramento, CA
PIER Manager	Martha Brook P.E.

This project is being conducted by the California Energy Commission's Public Interest Energy Research (PIER) program. PIER supports energy research and development that improves the quality of life in California by bringing environmentally safe, affordable, and reliable energy services and products to the marketplace.

Final Phase Research - HPCBS Program

The Problem	Commercial buildings are responsible for over 33% of the electricity used in California and over 40% of the peak electric demand. Lighting and heating, ventilation and air conditioning (HVAC) systems are the most energy intensive end uses in commercial buildings. Designers, owners and operators of California commercial buildings need tools and technologies to help them reduce energy consumption and peak demand.
Proposed Research	The goal of this research program is to develop and demonstrate advanced tools, technologies and building systems that will economically deliver significant energy and peak demand savings and enhance the indoor environment of commercial buildings in California.
Research Justification and Goals	Supports California's goal to implement actions outlined in the Governor's Green Buildings Action Plan to improve building performance and reduce grid-based electrical energy purchases in all State and commercial buildings by 20 percent by 2015 per the Energy Action Plan 2005; and to maximize the energy efficiency potential of existing buildings per the Integrated Energy Policy Report 2003 by: • Accelerating introduction of better benchmarking and monitoring tools and efficient equipment and methods to heat, cool, ventilate and light the commercial building stock in California
Contractor	Department of Energy, Lawrence Berkeley National Laboratory
Site Location	Berkeley, CA
PIER Manager	Martha Brook P.E.

This project is being conducted by the California Energy Commission's Public Interest Energy Research (PIER) program. PIER supports energy research and development that improves the quality of life in California by bringing environmentally safe, affordable, and reliable energy services and products to the marketplace.

Hot Dry Optimized AC

The Problem	Air conditioning is the main cause of California's peak electricity demand. Residential air conditioners are designed to meet a national standard which is based on average weather conditions across the US. Although not an issue for California, dehumidification is required in many parts of the country and this feature results in an air conditioning unit which uses more power than necessary in a dry summer southwestern climates. There is a potential to reduce peak loads in hot dry climates by designing air conditioners optimized for hot and dry conditions.
Proposed Research	The purpose of this project is to design and test a typical residential (3.5-ton split) and small commercial (5-ton packaged) air conditioning system optimized for California's hot-dry conditions. System specifications will be developed. A manufacturer partner will design, build and test a prototype hot-dry air conditioner that meets the specifications. Design guidelines will be developed and results will be disseminated
Research Results	Two life cycle-optimized air conditioners were designed and tested at Southern California Edison and Pacific Gas and Electric laboratories. The units met their targets for high performance and efficiency. Strategies for persuading a large manufacturer to build a hot, dry optimized air conditioners are being implemented. Electric utilities in hot, dry climate areas have been approached and many are interested in coordinating with the project.
Research Justification and Goals	Supports California's goal to leverage energy efficiency improvements for new and existing buildings per the Integrated Energy Policy Report 2004 Update; and to improve new and remodeled building efficiency by 5 percent per the Energy Action Plan 2003 by: • Producing cooling equipment that produces comfortable conditions while using less energy. • Reducing peak electrical demand related to small air conditioning equipment. This project also addresses Public Resources Codes 25620.1.(b)(6); 25695.(a).
Publications	The number of publications produced are too numerous to list here. For a complete list please visit: => http://www.hdac-des-pier.com/index.html
Contractor	Southern California Edison
PIER Manager	Chris Scruton

This project is being conducted by the California Energy Commission's Public Interest Energy Research (PIER) program. PIER supports energy research and development that improves the quality of life in California by bringing environmentally safe, affordable, and reliable energy services and products to the marketplace.

Investigation of Mold-Resistant Building Assemblies and Construction Practices for California Homes

The Problem	Residential construction practices in California have improved the overall energy efficiency of the building envelope, and at the same time can create conditions that are favorable for mold growth. When water intrudes into envelope cavities and does not dry quickly, mold may propagate. Mold growth can compromise the building envelope energy efficiency, damage building materials and affect the health of occupants. By understanding the building construction parameters affecting mold growth, it may be possible to mitigate or eliminate mold growth.
Proposed Research	The purpose of this project is to conduct an investigation of residential building construction practices and innovative building assemblies that are resistant to mold formation and growth.
Research Justification and Goals	Supports California's goal to leverage energy efficiency improvements for new and existing buildings per the Integrated Energy Policy Report 2004 Update; and to protect the public's health and safety and ensure our quality of life per the Energy Action Plan 2003 by: • Providing baseline data on mold incidences in residential buildings in California. • Characterizing susceptibility of various residential building assemblies and construction practices to mold growth in the presence of moisture. • Providing technical data and recommendations on improved residential building assemblies and construction practices in California, resulting in higher quality, more energy efficient homes.
Contractor	Gas Technology Institute
Site Location	Project work is being conducted at various locations throughout California.
PIER Manager	Ann Peterson

This project is being conducted by the California Energy Commission's Public Interest Energy Research (PIER) program. PIER supports energy research and development that improves the quality of life in California by bringing environmentally safe, affordable, and reliable energy services and products to the marketplace.

Modeling for Under Floor Air Distribution (UFAD)

The Problem	Under Floor Air Distribution (UFAD) is an increasingly popular method of delivering space conditioning into buildings. UFAD has many benefits over conventional overhead air distribution and good designs have the potential to improve occupant comfort and health as well as reduced energy use. Unfortunately, standardized tools for design and performance optimization do not exist.
Proposed Research	The purpose of this project is to develop a fundamental principles model for Under Floor Air Distribution (UFAD) that can be implemented in various building simulation software. These tools will be used by Californian design practitioners to calculate the energy performance of UFAD systems and to compare the performance of UFAD systems with that of conventional systems. The availability of such tools will help UFAD technology achieve its full potential by enabling the design of UFAD systems that are energy efficient, intelligently operated, and effective in their performance.
Research Results	The fundamental principles model developed by this project is currently being used to develop Under Floor Air Distribution (UFAD) compliance credits for the California 2008 Energy Efficiency Standards for Nonresidential Buildings.
Research Justification and Goals	Supports California's goal to transform RD&D projects on energy efficiency technologies into energy efficiency tools and standards per the Energy Action Plan 2005; and to leverage energy efficiency improvements for new and existing buildings per the Integrated Energy Policy Report 2004 Update by: • Providing a sound theoretical understanding of the behavior of Under Floor Air Distribution (UFAD) systems. • Confirming that UFAD systems are designed to maximize the indoor environmental health and comfort benefits for California occupants. • Providing the basic model for the addition of a UFAD systems compliance credit to the California Energy Efficiency Standards. • Developing validated mathematical models of the Room Air Stratification (RAS) phenomenon and the thermal performance of underfloor air supply plenums. • Decreasing the cooling energy and fan energy end-use consumption in California commercial buildings by fostering the adoption of UFAD technology. • Encouraging the rapid incorporation of research findings into UFAD products by working closely with the HVAC industry partners who are involved in this project. • Increasing customer choices for efficient buildings by providing analysis tools that will reduce the risk to designers and owners when choosing to use UFAD technology.
Contractor	The Regents of the University of California - Berkeley
Site Location	Berkeley, CA
PIER Manager	Norm Bourassa

This project is being conducted by the California Energy Commission's Public Interest Energy Research (PIER) program. PIER supports energy research and development that improves the quality of life in California by bringing environmentally safe, affordable, and reliable energy services and products to the marketplace.

National Building Control Information Program

The Problem	Information about building control systems, including sensors, actuators, transducers, controllers, and communications networks, is patchy, anecdotal and largely based on marketing information supplied by manufacturers. Unlike the consumer market, where independent consumer publications test and report on many products, there is no comprehensive and unbiased source of reliable test information on commercial building control systems and components. Across the country these systems control equipment which consumes huge amounts of energy, and survey evidence suggests that many control systems do not function properly and are poorly understood.
Proposed Research	The National Building Controls Information Program (NBCIP) has a mission of facilitating the adoption of energy efficient building control products through testing, demonstration, education and dissemination of product information. It will provide the unbiased source of information on building control systems which is so needed. Through this project, NBCIP will also assist the market transfer of PIER's controls-related research, and PIER will guide the research and outreach conducted by this national program.
Research Justification and Goals	Supports California's goal to maximize the energy efficiency potential of existing buildings per the Integrated Energy Policy Report 2003; and to develop strategies to achieve additional savings in existing buildings per the Integrated Energy Policy Report 2003 by: • Facilitating the energy efficiency of buildings through the optimal design and operation of HVAC control systems. • Providing an independent and unbiased source of information on components and systems for building environmental control systems.
Contractor	Iowa State University, Iowa Energy Center
PIER Manager	Chris Scruton

This project is being conducted by the California Energy Commission's Public Interest Energy Research (PIER) program. PIER supports energy research and development that improves the quality of life in California by bringing environmentally safe, affordable, and reliable energy services and products to the marketplace.

NightBreeze Products

The Problem	California has a great opportunity to use cool night air for ventilating and cooling residential buildings, however because of security concerns and other issues, an automatic method is needed. The NightBreeze ventilation cooling technology developed by Davis Energy Group is ideal for this purpose, but because it was built around a hydronic system, few households and builders are able to use it. There is a need to transition the NightBreeze technology to a more mainstream equipment platform to facilitate market adoption.
Proposed Research	The purpose of this project was to adapt the NightBreeze technology, which is for residential ventilation cooling, to the production and custom home markets. To accomplish this, the NightBreeze technology will be integrating with another widely-marketed ventilation system and a variable speed gas furnace. Additionally, a fan coil specifically for the existing hydronic NightBreeze technology will be developed. The project will also develop an integrated multi-zone controller to improve residential efficiency, especially in two-story houses.
Research Results	The Night Breeze system was successfully integrated into a mainstream split system air conditioner with a gas furnace. Zoning capabilities were added for two zones. The system utilizes readily available components already being marketed, although for optimum performance a variable speed fan with integrated programming is required. This system was designed and successfully tested with an Amana/Goodman variable fan furnace system.
Research Justification and Goals	Supports California's goal to leverage energy efficiency improvements for new and existing buildings per the Integrated Energy Policy Report 2004 Update; and to improve new and remodeled building efficiency by 5 percent per the Energy Action Plan 2003 by: • Improving the energy value of California's electricity by significantly increasing the efficiency of residential cooling. • Improving indoor residential environments by automatically ventilating homes with filtered outside air, thus improving their indoor air quality.
Contractor	Davis Energy Group, Inc.
Site Location	Davis, CA & Davis, CA
PIER Manager	Chris Scruton

This project is being conducted by the California Energy Commission's Public Interest Energy Research (PIER) program. PIER supports energy research and development that improves the quality of life in California by bringing environmentally safe, affordable, and reliable energy services and products to the marketplace.

PIER Buildings Program Tech Transfer Initiative

The Problem	The PIER program has funded a number of excellent research projects that have the potential to substantially improve building energy efficiency, but unless and until these technologies and practices are widely adopted in the marketplace, the PIER program will not have achieved its stated goal of decreasing building energy use.
Proposed Research	The contractor will produce of a series of fact sheets (technology briefs) on PIER program research in the Buildings End-Use Energy Efficiency area, then distribute the briefs to interested constituencies in the energy efficiency and AEC (Architectural, Engineering and Construction) sectors. Additionally, the generated material will be placed in trade publications and journals that are read by people who could benefit from PIER research. Capitalizing on the position of Platts/McGraw-Hill Companies' media access to the energy and AEC sectors, PIER can improve the overall market exposure of completed research and ultimately improve end-use building energy efficiency.
Research Results	As of December 31st, 2005, Platts Research and Consulting has published and distributed twenty-three PIER technology briefs by email. These briefs are also being distributed freely on the E Source/Platts website. Twenty-nine full article placements have been made in construction trade and association journals including Energy User News, Indoor Comfort News, Home Energy, LightNow, and Plant Engineering to name a few.
Research Justification and Goals	Supports California's goal to optimize all strategies for increasing conservation and energy efficiency to minimize increases in electricity and natural gas demand per the Energy Action Plan 2003; and to optimize energy conservation and resource efficiency per the Energy Action Plan 2003 by: • Promoting California PIER research through the wide distribution of 2-page technology briefs about PIER research products that are ready for the market place. • Leveraging PIER technology briefs' contents for articles published in construction trade and association journals. • Increasing and maintaining direct communication with industry and education professionals that can use PIER technology briefs' information on a regular basis.
Publications	PIER Technical Brief - The Next Stage in Evaporative Cooling ==>http://www.energy.ca.gov/2005publications/CEC-500-2005-131/CEC-500-2005-131-FS.PDF PIER Technical Brief - Automatic Diagnosis for Ailing Rooftop Air Conditioners ==>http://www.energy.ca.gov/2005publications/CEC-500-2005-127/CEC-500-2005-127-FS.PD
Contractor	Platts Research and Consulting
PIER Manager	Norm Bourassa

This project is being conducted by the California Energy Commission's Public Interest Energy Research (PIER) program. PIER supports energy research and development that improves the quality of life in California by bringing environmentally safe, affordable, and reliable energy services and products to the marketplace.

Power Supplies Efficiency Improvement

The Problem	Approximately 1-2 percent of all U.S. electricity use could be cost-effectively saved by switching to more efficient designs for power supplies. This translates into approximately 30-60 billion kWh and a staggering $2.5-$5 billion per year in energy costs. To move toward realizing a portion of these savings, a focused analysis of power supply energy savings opportunities needs to be done.
Proposed Research	The purpose of this project is to conduct a technical and market assessment of the potential for improvements in the design efficiency of the external power supplies required on electronic devices such as cell phones, portable phones, power tools, etc. This effort will focus on investigating ways to reduce power in the active mode of operation.
Research Results	This project developed California's first external power supply standard which will go into effect on July 1, 2006. The second tier will go into effect on January 1, 2008.
Research Justification and Goals	Supports California's goal to adopt new appliance standards by 2006, supplementing those adopted in December 2004 per the Energy Action Plan 2005 by: • Standardizing test procedures to measure power supply energy efficiency • Collecting and disseminating a substantial volume of efficiency test data • Developing improved estimates of the total number of power supplies in use and their total energy consumption • Recommending policy options to the State of California • Working closely with industry to improve the efficiency of existing power supply designs through information sharing and a design competition
Contractor	Electric Power Research Institute (EPRI)
PIER Manager	Bradley Meister P.E.

This project is being conducted by the California Energy Commission's Public Interest Energy Research (PIER) program. PIER supports energy research and development that improves the quality of life in California by bringing environmentally safe, affordable, and reliable energy services and products to the marketplace.

Program Market Connection

The Problem	Many times during and after research activities, the critical information that is needed to advance a new product in the marketplace does not get disseminated to the right people at the right time. It is critical that major manufacturers, utilities, schools, and a variety of other organizations get this information when it is first available in order to make the right market connection and to advance awareness of the technology.
Proposed Research	The purpose of this program is to develop and distribute market connection material on innovative heating, ventilation, and air conditioning (HVAC) systems for California schools that will improve indoor air quality, save energy, and reduce peak demand. This research effort will involve providing material to many of the school-related institutions that govern or guide school building construction in California, including the Division of the State Architect, the Coalition for Adequate School Housing, and the Collaborative for High Performance Schools. Additionally, information will be provided to utilities and major manufacturers, and presented at national conferences.
Research Results	A Technology Transfer Plan and Codes Action Plan have been completed. An outreach plan and a number of fact sheets have been developed. Two articles in Engineered Systems Magazine are scheduled for the March and April 2006 issues. Presentations have been made at conferences held by the Coalition for Adequate School Housing (CASH); the American Society of Heating, Refrigerating and Air-Conditioning Engineers (ASHRAE); and other organizations. Five presentations are planned for California utilities to increase awareness of thermal displacement ventilation technology.
Research Justification and Goals	Supports California's goal to maximize the energy efficiency potential of existing buildings per the Integrated Energy Policy Report 2003 by: • Facilitating the construction and operation of schools that are energy efficient, healthy and comfortable by developing and demonstrating innovative HVAC systems for California schools. • Improving building affordability and value by providing design guidelines • and objective product evaluation for cost-effective and energy efficient school • HVAC systems. • Reducing energy costs by promoting thermal displacement ventilation technology, which will reduce both overall energy use and peak loads.
Contractor	Architectural Energy Corporation
PIER Manager	Bradley Meister P.E.

This project is being conducted by the California Energy Commission's Public Interest Energy Research (PIER) program. PIER supports energy research and development that improves the quality of life in California by bringing environmentally safe, affordable, and reliable energy services and products to the marketplace.

Residential Retrofit Commissioning

The Problem	Envelope and space conditioning systems in houses waste energy through leaking ducts, faulty equipment, and problems with the building envelope. Few contractors fully understand the relationship between the various systems in houses as well as how to diagnose and repare problems.
Proposed Research	The purpose of this project is to merge scientifically validated diagnostic and repair techniques for residential thermal comfort systems with the business practices of existing contractors. A group of selected contractors will assess which diagnostic methods can be incorporated into a contractors practice. The methods will be documented and training materials developed. The net benefits will be validated with before and after energy use monitoring and occupant surveys.
Research Results	A survey of performance contractors has been made, and development and documentation of practical methods is under way. Business model assessment is also on-going. Energy benefits of commissioning are being determined. Many of the contractors trained in this project are working in a synergistic project sponsored by the California Public Utilities Commission.
Research Justification and Goals	Supports California's goal to leverage energy efficiency improvements for new and existing buildings per the Integrated Energy Policy Report 2004 Update; and to improve new and remodeled building efficiency by 5 percent per the Energy Action Plan 2003 by: • Improving electricity reliability/sufficiency by making existing residences more • energy efficient. • Strengthening the California economy by improving the productivity of California residential contractors. • Providing more comfortable and healthful indoor environments.
Contractor	Bevilacqua-Knight, Inc.
PIER Manager	Chris Scruton

This project is being conducted by the California Energy Commission's Public Interest Energy Research (PIER) program. PIER supports energy research and development that improves the quality of life in California by bringing environmentally safe, affordable, and reliable energy services and products to the marketplace.

Residential Ventilation Standards Research

The Problem	The purpose of ventilation is to provide acceptable indoor air quality and to enhance durability of systems and materials. The building ventilation requirements in the current Title 24 standard are primarily engineering based and, as a result, technical feasibility is likely to remain a key driver for these standards.
Proposed Research	This project will examine the relationship between ventilation and health by using the American Society of Heating, Refrigerating and Air-Conditioning Engineers (ASHRAE) American National Standards Institute (ANSI) code 62.2-2003 and by examining how this code differs from current Title 24 Building Energy Efficiency code requirements. This project will propose changes to ventilation requirements in Title 24, analyze the energy impacts of these changes, and recommend standards credits and compliance paths for residential ventilation technologies.
Research Justification and Goals	Supports California's goal to adopt new building standards for implementation in 2008 that include, among other measures, cost effective demand response technologies and integrated photovoltaic systems per the Energy Action Plan 2005 by: • Providing adequate indoor air quality at the lowest energy cost through ventilation standards for new homes.
Contractor	Department of Energy, Lawrence Berkeley National Laboratory
Site Location	Berkeley, CA
PIER Manager	Martha Brook P.E.

This project is being conducted by the California Energy Commission's Public Interest Energy Research (PIER) program. PIER supports energy research and development that improves the quality of life in California by bringing environmentally safe, affordable, and reliable energy services and products to the marketplace.

RTU Diagnostics

The Problem	Computational and communication abilities in modern air conditioning unit contollers is sufficient to enable automated diagnostics, similar to those found in automobiles. At the same time, high energy costs, high labor costs, the scarcity of skilled technicians, and the problems caused by equipment downtime make diagnostics more attractive than ever. Research at Herrick Labs has pushed diagnostics for the refrigeration cycle and economizers into the realm of feasible technology. Research is now needed to make this technology commerically viable.
Proposed Research	This project builds on research from Purdue University Herrick Labs and at Field Diagnostics Services, Inc, to develop and deploy practical diagnostics for roof top air conditioning units. If found to be economically practical the diagnostics may be marketed by a major controls company, which has found a great amount of interest in the commercial market for this product.
Research Results	Several generations of the diagnostic technology are in stages of development and deployment. The most advanced version of the diagnostic technology is using temperature sensors to provide diagnostic information on the refrigeration cycle, an approach which can greatly reduce the cost. Faults such as low evaporator airflow, blocked condensing unit airflow, low refrigerant charge, and malfunctioning compressors can be detected. An advanced user interface which displays and prioritizes information has also been developed.
Research Justification and Goals	Supports California's goal to leverage energy efficiency improvements for new and existing buildings per the Integrated Energy Policy Report 2004 Update; and to improve new and remodeled building efficiency by 5 percent per the Energy Action Plan 2003 by: • Deploying and developing practical commercial versions of the diagnostic technology. • Developing a practical internet-based user interface.
Contractor	Architectural Energy Corporation
PIER Manager	Chris Scruton

This project is being conducted by the California Energy Commission's Public Interest Energy Research (PIER) program. PIER supports energy research and development that improves the quality of life in California by bringing environmentally safe, affordable, and reliable energy services and products to the marketplace.

Speciflow

The Problem	Commercial facilities are interested in maintaining adequate indoor air quality, while at the same time avoiding energy waste by over-ventilating spaces. To date, accurate airflow measurements have required expensive air flow stations. The Speciflow product demonstrated an ability to measure airflows using only the outside air dampers of air handling equipment at small damper openings, which is the critical minimum airflow point. Information is lacking on airflows at higher damper openings.
Proposed Research	The Speciflow project will develop the means to correlate airflows within families of damper and air handler equipment, to minimze the calibration requirements for manufactured products. Additionally this project will measure airflows at higher damper opening positions.
Research Results	The project has successfully demonstrated an ability to predict airflows within families of dampers. It was not found to be possible to precisely measure airflows when dampers are nearly wide open, although the accuracy reached was fairly close to the target desired. Various upstream air conditions were found to be significant challenges for accurate airflow measurement, which could require the addition of airflow straighteners for the most accurate readings.
Research Justification and Goals	Supports California's goal to leverage energy efficiency improvements for new and existing buildings per the Integrated Energy Policy Report 2004 Update; and to improve new and remodeled building efficiency by 5 percent per the Energy Action Plan 2003 by: • Measuring accurately the airflows through air handler dampers when dampers are nearly wide open.
Contractor	Architectural Energy Corporation
PIER Manager	Chris Scruton

This project is being conducted by the California Energy Commission's Public Interest Energy Research (PIER) program. PIER supports energy research and development that improves the quality of life in California by bringing environmentally safe, affordable, and reliable energy services and products to the marketplace.

Thermal Displacement Ventilation (TDV) in Schools

The Problem	Conventional classroom heating, ventilation, and air conditioning (HVAC) systems have poor ventilation effectiveness, many are noisy, and they are not particularly energy efficient. Research is needed to develop and demonstrate innovative HVAC systems for State schools that have energy and air quality advantages over conventional systems.
Proposed Research	The purpose of this project is to develop and demonstrate thermal displacement ventilation (TDV) cooling for California classrooms sites in Roseville and San Juan Capistrano. It has many advantages over conventional systems including better acoustics, greater energy efficiency, excellent ventilation effectiveness and cleaner and healthier air in general. With TDV, outside air is delivered at about 65 ºF to each classroom. Air is delivered near the floor and exhausted near the ceiling. The cool fresh air at the floor rises as it is warmed by occupants or other heat generating objects in the space quietly cooling and removing polluted air.
Research Results	The prototype heating, ventilation, and air conditioning (HVAC) unit developed is very effective at controlling supply air temperature. The variable air volume fan allows for significant fan energy savings. The variable capacity compressor eliminates cycling, which can improve thermal comfort. The displacement system provides a significant acoustic improvement over conventional systems, while sufficiently cooling the test classroom.
Research Justification and Goals	Supports California's goal to maximize the energy efficiency potential of existing buildings per the Integrated Energy Policy Report 2003 by: • Developing and demonstrating innovative heating, ventilation, and air conditioning (HVAC) systems for California schools. • Providing design guidelines and objective product evaluation for cost-effective and energy efficient school HVAC systems. • Promoting thermal displacement ventilation technology, which will reduce both overall energy use and peak loads.
Contractor	Architectural Energy Corporation
Site Location	San Francisco, CA
PIER Manager	Bradley Meister P.E.

This project is being conducted by the California Energy Commission's Public Interest Energy Research (PIER) program. PIER supports energy research and development that improves the quality of life in California by bringing environmentally safe, affordable, and reliable energy services and products to the marketplace.

Web-based Diagnostics

The Problem	Most large facilities with central plants have computerized facility management and control systems. Many of the newer systems can make information available over the internet, and even older systems with upgrades can transmit this data. There is a potential to use this information for diagnostics to detect malfunctioning equipment. The energy use in these large facilities justifies the effort to locate malfunctions. If information is available over a wide area network a third party processor could efficiently automate the process of detecting faults.
Proposed Research	This project will develop a system for analyzing performance data from air handlers and central plant equipment in order to detect faults. The information will be transmitted to a central processing location, where the maintenance and upgrading of the diagnostic software can be carefully controlled. The diagnostic information will be made available to facility owners and managers, and potentially to third-party maintenance organizations.
Research Results	The first revision of the diagnostic software has been implemented in a Tridium system, which facilitates data transfer with older control systems. The air handler performance assessment rules have been implemented and central plant diagnostics are under development. A third party facility management firm which has clients using the Tridium system is a partner on the project.
Research Justification and Goals	Supports California's goal to leverage energy efficiency improvements for new and existing buildings per the Integrated Energy Policy Report 2004 Update; and to improve new and remodeled building efficiency by 5 percent per the Energy Action Plan 2003 by: • Developing a diagnostic system for central plant equipment and air handlers. • Implementing this system at a central processing location, by utilizing wide area networks, to allow controlled performance monitoring, maintenance and upgrades of the software. • Making this information available to owners, managers and third party maintenance providers in order to correct faults detected.
Contractor	Architectural Energy Corporation
PIER Manager	Chris Scruton

This project is being conducted by the California Energy Commission's Public Interest Energy Research (PIER) program. PIER supports energy research and development that improves the quality of life in California by bringing environmentally safe, affordable, and reliable energy services and products to the marketplace.

BLDGS Projects Completed in 2005

Attic Heat for Water Heating

The Problem	Water heating is a significant cost for low income households, and the ability to pay higher first costs for efficient equipment is limited. There is a potential to utilize attic heat to heat or pre-heat domestic water and reduce or eliminate the energy cost associated with water heating. A concern about this approach would be the potential of frozen pipes in attics that could result in flooding or water damage.
Proposed Research	The objective of the Attic Heat for Water Heating project is to design and evaluate a system for recovering heat from attics in Habitat for Humanity and manufactured houses and use the system for domestic water heating.
Research Results	Three designs were investigated which used various sizes of large water pipes located in the attic. The most effective was inclined, double 4-inch diameter pipes, which reduced water heating energy costs by 24%. This was found to be cost effective in hot summer, mild winter areas such as the San Joaquin valley, where the potential for freezing pipes would be less than some other areas.
Research Justification and Goals	Supports California's goal to leverage energy efficiency improvements for new and existing buildings per the Integrated Energy Policy Report 2004 Update; and to improve new and remodeled building efficiency by 5 percent per the Energy Action Plan 2003 by: • Reducing domestic water heating costs in low income housing by utilizing attic heat. • Reducing the first cost of energy efficient domestic water heating.
Publications	Energy Efficient Low Income Housing PIER Program Final Report
Contractor	ADM Associates, Inc.
PIER Manager	Chris Scruton

This project is being conducted by the California Energy Commission's Public Interest Energy Research (PIER) program. PIER supports energy research and development that improves the quality of life in California by bringing environmentally safe, affordable, and reliable energy services and products to the marketplace.

Attic Ventilation

The Problem	Low-income households often incur relatively higher energy costs than higher income groups because of cost barriers commonly associated with energy efficiency measures and because energy costs constitute a larger fraction of the household budget. Research is needed that focuses on low-cost options to reduce monthly energy costs and improve the quality of life by improving comfort levels in homes.
Proposed Research	The purpose of this project is to compare the performance of two different methods for reducing attic heat loads in Habitat for Humanity and manufactured housing to evaluate the relative effectiveness and cost of these methods in reducing space conditioning loads. Retrofitting radiant barriers, both at the rafter level and immediately above the insulation will be evaluated. Also to be evaluated is a system for spraying water onto the roof during high temperature periods.
Research Results	Retrofitting radiant barriers was effective, reducing cooling loads up to 7% when placed at either the roof plane or directly above the insulation. Dust build-up with the latter approach might eventually reduce its effectiveness. Radiant barriers were especially effective in manufactured homes, with minimal incremental cost. These barriers are not required by HUD, which regulates manufactured housing, and are often not available even as an option. The roof spray system was also found to be effective in reducing cooling energy, showing a similar cooling reduction to the radiant barrier, at the cost of some 30 gallons of water daily on hot days.
Research Justification and Goals	Supports California's goal to leverage energy efficiency improvements for new and existing buildings per the Integrated Energy Policy Report 2004 Update; and to improve new and remodeled building efficiency by 5 percent per the Energy Action Plan 2003 by: • Reducing cooling energy use in buildings, integrating energy-efficient strategies and products with other building elements, and searching for the highest value strategies and technologies for retrofit. • Developing ventilation and construction techniques that mitigate moisture and indoor air quality (IAQ) problems. • Increasing consumer load management choices.
Publications	Energy Efficient Low Income Housing PIER Program Final Report
Contractor	ADM Associates, Inc.
PIER Manager	Chris Scruton

This project is being conducted by the California Energy Commission's Public Interest Energy Research (PIER) program. PIER supports energy research and development that improves the quality of life in California by bringing environmentally safe, affordable, and reliable energy services and products to the marketplace.

Conceptual Design Energy Analysis Tool Phase 2

The Problem	Building designers rarely pay attention to the energy use impacts of their building designs until late in the detailed design phase of the project. At this phase in the project, an energy code consultant or engineer identifies opportunities to make the building more energy efficient. However, at this late stage of the design, many attractive energy savings options are already constrained due to earlier design decisions.
Proposed Research	This project is intended to give building designers feedback on building energy use early in the design process. This will enable them to make informed decisions on cost-effective design modifications with large energy impacts.
Research Results	The major accomplishment of this project was the successful development and launch of the GBS web service, available for free to over half of the 3D-CAD application users in the US. The service provides immediate energy results for users of Autodesk's Revit, Architectural Desktop, Graphisoft's ArchiCAD product, and building systems products as well . The service also intelligently promotes the California Investor Owned Utility Savings By Design program by highlighting potential energy savings if users choose to participate in the program.
Research Justification and Goals	Supports California's goal to improve new and remodeled building efficiency by 5 percent per the Energy Action Plan 2003; and to leverage energy efficiency improvements for new and existing buildings per the Integrated Energy Policy Report 2004 Update by: • Enabling earlier feedback to architects on the energy implications of their designs. • Reducing the design costs associated with doing whole-building energy simulations.
Publications	Conceptual Design Energy Analysis Tool (CDEAT) - Phase II
Contractor	GeoPraxis, Inc.
Site Location	Petaluma, CA
PIER Manager	Martha Brook P.E.

This project is being conducted by the California Energy Commission's Public Interest Energy Research (PIER) program. PIER supports energy research and development that improves the quality of life in California by bringing environmentally safe, affordable, and reliable energy services and products to the marketplace.

Development and Demonstration of a Rapid Radiant Distribution System

The Problem	Radiant, in-slab hydronic thermal distribution systems have long been recognized as high quality comfort heating systems. The systems also have the potential for use as effective, low energy cooling systems. A major obstacle to their more widespread use is the large amount of on-site labor required for installation, and for customized designs for each floor plan.
Proposed Research	The purpose of this project is to develop system concepts for reducing on-site labor and simplifying design and installation of radiant hydronic floor systems. Preferred concepts will be chosen, product requirements defined and prototype arrays installed.
Research Results	The reserachers surveyed industry professionals and observed actual construction to identify market barriers to the installation of hydronic radiant slab systems by production builders. A modular concept was developed which standardizes layout design, including offsite prefabrication of radiant tubing to welded wire mesh using special jigs, an automatic tying tool to reduce installation labor, and special mesh supports to correctly position the mesh vertically within a concrete slab. The systems developed were favorably reviewed by installers of radiant heating systems, indicating that the design solutions developed have moved hydronic radiant systems closer to market acceptance.
Research Justification and Goals	Supports California's goal to improve new and remodeled building efficiency by 5 percent per the Energy Action Plan 2003; and to implement actions outlined in the Governor's Green Buildings Action Plan to improve building performance and reduce grid-based electrical energy purchases in all State and commercial buildings by 20 percent by 2015 per the Energy Action Plan 2005 by: • Reducing the on-site labor for installing radiant hydronic thermal distribution systems by a factor of three. • Standardizing the design of radiant hydronic thermal distribution systems so that a standard layout can be used in a variety of floor plans. • Developing new tools and techniques to make labor more productive, to improve installation quality, and to reduce the likelihood of system problems.
Publications	Synergistic Water Heating and Distribution Technologies (SWHDT) Program Final Report
Contractor	Davis Energy Group, Inc.
PIER Manager	Chris Scruton

This project is being conducted by the California Energy Commission's Public Interest Energy Research (PIER) program. PIER supports energy research and development that improves the quality of life in California by bringing environmentally safe, affordable, and reliable energy services and products to the marketplace.

Ducts in Conditioned Space

The Problem	Air duct-based thermal distribution systems typically found in California residential buildings are extremely susceptible to duct leakage and are usually located in the most thermally hostile part of the building, the attic. In addition, duct leakage in attics can result in harmful air flows from attics into conditioned spaces, raising cooling loads and introducing contaminants and allergens into the living area. Moving the ducts into the conditioned space can greatly reduce the thermal challenge and makes duct leakage much less relevant. To date this has not been widely accepted because of esthetic and first-cost issues.
Proposed Research	The purpose of this project is to come up with a practical and cost effective method for bringing the air conditioning ducts into the conditioned space in low income housing.
Research Results	Ducts were located in the conditioned space by constructing a dropped ceiling in the hallway and using the interstitial space for ductwork. This was found to be cost-effective and practical in smaller houses. Total heating and cooling energy use was reduced by nearly 20% in the test case. Leakage was reduced in a test house from over 23% to 1%. The cost of installing the ducts as designed within the conditioned space was projected to be significantly less than the cost of ducts located in the attic.
Research Justification and Goals	Supports California's goal to leverage energy efficiency improvements for new and existing buildings per the Integrated Energy Policy Report 2004 Update; and to improve new and remodeled building efficiency by 5 percent per the Energy Action Plan 2003 by: • Reducing cooling energy use in buildings by devising practical and cost effective ways to move the ducts into the conditioned space. • Improving indoor air quality by eliminating problems caused by duct leakage in attics.
Publications	Energy Efficient Low Income Housing PIER Program Final Report
Contractor	ADM Associates, Inc.
PIER Manager	Chris Scruton

This project is being conducted by the California Energy Commission's Public Interest Energy Research (PIER) program. PIER supports energy research and development that improves the quality of life in California by bringing environmentally safe, affordable, and reliable energy services and products to the marketplace.

Energy Efficiency Through Community Design

The Problem	Many microclimates in California are made more severe because of large areas of unshaded pavement and roofing. If these areas were either shaded or reduced in size, the general ambient temperature in the area would be lower, reducing the need for air conditioning. If the relationship between shading and ambient areas were quantified this could provide policy makers with a basis for regulations encouraging tree planting and an economic justification for tree planting programs.
Proposed Research	The Energy Efficiency through Community Design project will demonstrate the feasibility of reducing summer ambient temperatures through increasing the fraction of shaded areas by incorporating narrow streets and shade trees into the designs of low-income single-family housing developments.
Research Results	Five mobile home parks with varying levels of shade cover were selected for monitoring. An empirical relationship of ambient temperatures to shaded percentages was derived. On hot days, the model predicts a significant temperature reduction, as much as 6 to 8 degrees Fahrenheit, can result with planting more trees. The model provides a quantitative analysis for developing design guidelines and regulations relative to tree planting.
Research Justification and Goals	Supports California's goal to leverage energy efficiency improvements for new and existing buildings per the Integrated Energy Policy Report 2004 Update; and to improve new and remodeled building efficiency by 5 percent per the Energy Action Plan 2003 by: • Reducing cooling energy use in buildings by reducing the general ambient air temperature through encouraging more shade trees and reducing pavement areas in low income communities. • Determining the effect of shaded areas on ambient temperatures to help quantify the cost effectiveness of tree planting programs and shade-encouraging community design. • Making outside areas more comfortable in low income communities by encouraging shade trees and reducing pavement areas.
Publications	Energy Efficient Low Income Housing PIER Program Final Report
Contractor	ADM Associates, Inc.
PIER Manager	Chris Scruton

This project is being conducted by the California Energy Commission's Public Interest Energy Research (PIER) program. PIER supports energy research and development that improves the quality of life in California by bringing environmentally safe, affordable, and reliable energy services and products to the marketplace.

Envelope and IAQ Interactions

The Problem	Energy efficiency measures such as tight building envelopes and ducts in conditioned spaces are sometimes blamed for adverse effects on indoor environmental quality such as higher moisture or carbon dioxide levels. This perception can act as a disincentive to the adoption of energy efficiency measures. Research is needed to determine the impact of certain efficiency measures on indoor environmental quality.
Proposed Research	The objective of the Envelope and Indoor Air Quality (IAQ) Interactions project is to evaluate the impacts of selected energy efficiency measures on low income housing such as tight building envelopes and ducts in conditioned spaces.
Research Results	Four test houses with ducts in conditioned spaces were monitored for carbon dioxide concentrations and humidity levels. The results were compared with four baseline houses of otherwise similar construction using conventional flex ducts. Carbon dioxide levels were found to be lower in houses with ducts in conditioned spaces, and humidity levels were found to be roughly the same. This supports the conclusion that putting ducts in conditioned spaces does not have a negative effect on indoor environmental quality with respect to carbon dioxide or humidity. Researches were unable to study the impact of tight building envelopes on indoor air quality.
Research Justification and Goals	Supports California's goal to leverage energy efficiency improvements for new and existing buildings per the Integrated Energy Policy Report 2004 Update; and to improve new and remodeled building efficiency by 5 percent per the Energy Action Plan 2003 by: • Investigating the impact of energy efficiency measures on indoor environmental quality. • Reducing the perceptual barriers to adoption of efficiency measures.
Publications	Energy Efficient Low Income Housing PIER Program Final Report
Contractor	ADM Associates, Inc.
PIER Manager	Chris Scruton

This project is being conducted by the California Energy Commission's Public Interest Energy Research (PIER) program. PIER supports energy research and development that improves the quality of life in California by bringing environmentally safe, affordable, and reliable energy services and products to the marketplace.

Evaluation of Alternative Hot Water Distribution Systems

The Problem	Hot water distribution systems in houses can waste large amounts of water, energy, and time spent waiting for hot water to arrive, once the tap is opened. There are many, and sometimes conflicting claims regarding the performance of various hot water distribution systems. Objective analysis and comparison of these systems has not been available. If builders, owners, utilities, and government officials had better information on the actual costs and performance of these systems then better decisions can be made.
Proposed Research	This project will evaluate performance and economic benefits of existing alternative domestic hot water distribution systems that can potentially improve energy efficiency of hot water delivery in California residences. Potential energy savings, market barriers for alternative new systems, and cost-benefit analyses will be performed.
Research Results	This project simulated and compared the performance of central hot water heater systems, continuous and on-demand recirculation systems, various materials and insulation levels, and piping configurations. It was found that recirculation systems waste the least water, while on-demand recirculation systems and central hot water systems are the most energy efficient. Continuous recirculation systems waste the most energy. The results of this research are made available to California decision-makers.
Research Justification and Goals	Supports California's goal to leverage energy efficiency improvements for new and existing buildings per the Integrated Energy Policy Report 2004 Update; and to improve new and remodeled building efficiency by 5 percent per the Energy Action Plan 2003 by: • Comparing and evaluating water and energy performance of baseline and alternative hot water distribution systems. • Making this information available to California decision makers.
Publications	Synergistic Water Heating and Distribution Technologies (SWHDT) Program Final Report
Contractor	Davis Energy Group, Inc.
PIER Manager	Chris Scruton

This project is being conducted by the California Energy Commission's Public Interest Energy Research (PIER) program. PIER supports energy research and development that improves the quality of life in California by bringing environmentally safe, affordable, and reliable energy services and products to the marketplace.

Evaporative Coolers and Cool House Fan Integration

The Problem	There is a significant opportunity in Western climates for utilizing ventilation and evaporative cooling technologies to improve comfort and indoor environmental quality while saving energy. In some cases peak temperatures may also require conventional air conditioning to maintain comfort levels.
Proposed Research	The goal of the Evaporative Coolers and Whole House Fan Integration project is to determine if integrating a whole house fan with a standard air conditioner or an evaporative cooling system provides an economically viable, efficient alternative for comfort cooling needs in new low-income houses.
Research Results	Three different system approaches were tested in eight test houses: -integration of an evaporative cooler with standard air conditioning -operation of an evaporative cooler as a whole house fan -integration of an economizer with a standard air conditioner in a manufactured house. The research suggested that an evaporative cooler combined with conventional air conditioning would save significant amounts of energy in the Califonia central valley; that operating an evaporative cooler as a whole house fan was not attractive from an energy perspective; and that there are significant barriers to introducing outside air economizers into manufactured housing.
Research Justification and Goals	Supports California's goal to leverage energy efficiency improvements for new and existing buildings per the Integrated Energy Policy Report 2004 Update; and to improve new and remodeled building efficiency by 5 percent per the Energy Action Plan 2003 by: • Reducing cooling energy use buildings, integrating energy-efficient strategies and products with other building elements, and searching for the highest value strategies and technologies for retrofit. • Increasing consumer load management choices.
Publications	Energy Efficient Low Income Housing PIER Program Final Report
Contractor	ADM Associates, Inc.
PIER Manager	Chris Scruton

This project is being conducted by the California Energy Commission's Public Interest Energy Research (PIER) program. PIER supports energy research and development that improves the quality of life in California by bringing environmentally safe, affordable, and reliable energy services and products to the marketplace.

Lighting Research Program-Advanced Lighting Luminaires and Systems

The Problem	Different manufacturers and companies usually sell lighting systems as a set of components that are provided to create a complete lighting system. This requires a custom design and installation of the system. Thus, lighting systems are not integrated systems. This increases costs and complexity and creates technical problems.
Proposed Research	Investigate ways to improve the functionality and energy-efficiency of lighting systems. An element of the LRP involves research into the development of energy-efficient integrated lighting systems with improved operability, maintenance, warranty, customer support and commissioning features.
Research Results	The LRP developed several integrated lighting systems: a bathroom nightlight, a '"Smart Vanity" light, a wall-mounted occupancy-sensor-equipped nightlight, four portable desk lights for EnergyStar® compliance, an advanced residential kitchen downlight system, an energy-efficient portable office task light with integrated occupancy sensor, and an Integrated Classroom Lighting System(ICLS). The "Smart Vanity Light" received considerable media attention. The research team won a Flex Your Power (FYP) award for the bathroom nightlight in 2003. Finelite, the ICLS subcontractor, and the California Lighting Technology Center, developer of the kitchen downlight system, received FYP congratulatory awards in 2005. An extensive project web site is available at:
Research Justification and Goals	Supports California's goal to leverage energy efficiency improvements for new and existing buildings per the Integrated Energy Policy Report 2004 Update; and to implement actions outlined in the Governor's Green Buildings Action Plan to improve building performance and reduce grid-based electrical energy purchases in all State and commercial buildings by 20 percent by 2015 per the Energy Action Plan 2005 by: • Developing hotel and institutional bathroom lighting systems that save energy, improve safety, and lower overall operating costs. • Enhancing the availability of integrated energy-efficient high-end residential table lamps in the California marketplace. • Developing cost-effective high-efficiency compact fluorescent lamp downlight packages that do not exist in the marketplace for retrofit and remodeling applications. • Investigating options for portable task/ambient lighting luminaires with occupancy and other controls for office, home office, and commercial applications. • Providing cost-effective integrated lighting systems designed for glare-free lighting with lighting controls from a single sourc with one warranty for the entire system.
Publications	Hotel and Institutional Bathroom Lighting Final Report ==>http://www.archenergy.com/lrp/advlight_luminaires/deliverable_4.1.9_FINAL-RPT.pdf Energy Star Light Fixture Advancement Project Final Report ==>http://www.archenergy.com/lrp/advlight_luminaires/deliverable_4.2.15-FINAL-RPT.pd
Contractor	Architectural Energy Corporation
Site Location	Project work is being conducted at various locations throughout California.
PIER Manager	Michael Seaman

This project is being conducted by the California Energy Commission's Public Interest Energy Research (PIER) program. PIER supports energy research and development that improves the quality of life in California by bringing environmentally safe, affordable, and reliable energy services and products to the marketplace.

Lighting Research Program-Advanced Lighting Technologies

The Problem	Population growth and the sheer magnitude of California's building inventory signal a need to reduce building end-use energy consumption from lighting. Within this need there is an opportunity to capture energy efficiencies from the recent breakthroughs that allow solid-state lighting technologies to provide energy savings for buildings.
Proposed Research	Advanced lighting technologies, such as solid state lighting, could provide for significant energy conservation. An element of the LRP involves research into advanced lighting technologies by improving the efficiency, performance characteristics, and cost factors of white light emitting diode (LED) lighting and by developing practical luminaires.
Research Results	The LRP's Advanced Lighting Technologies research element developed concept LED designs and prototypes for residential and commercial building exteriors that mitigate the use of low-efficacy incandescent lamps, accelerated the use of energy-efficient LED technology for task lighting applications using LEDs in a consumer-acceptable luminaire that manages thermal conductivity to enhance lifetime and performance of the LEDs, and developed an elevator ceiling luminaire that demonstrates the suitability of LEDs for low-profile applications. An extensive project web site is available at:
Research Justification and Goals	Supports California's goal to leverage energy efficiency improvements for new and existing buildings per the Integrated Energy Policy Report 2004 Update; and to implement actions outlined in the Governor's Green Buildings Action Plan to improve building performance and reduce grid-based electrical energy purchases in all State and commercial buildings by 20 percent by 2015 per the Energy Action Plan 2005 by: • Providing reduced cost with energy-saving lighting equipment. • Reducing peak demand and improving load factor, leading to reduced infrastructure costs and system reliability risks. • Developing new lighting products to be manufactured in California.
Publications	Hybrid Outdoor Lighting Systems Final Report ==>http://www.archenergy.com/lrp/advlight_tech/deliverable_2.1.12_LED-FINAL-RPT.pdf LED Task Light Utilizing New Materials to Reduce Thermal Stress on High Brightness LEDs Final Report ==>http://www.archenergy.com/lrp/advlight_tech/deliverable_2.2.8_LED-task_FINAL-RPT.pd
Contractor	Architectural Energy Corporation
Site Location	Project work is being conducted at various locations throughout California.
PIER Manager	Michael Seaman

This project is being conducted by the California Energy Commission's Public Interest Energy Research (PIER) program. PIER supports energy research and development that improves the quality of life in California by bringing environmentally safe, affordable, and reliable energy services and products to the marketplace.

Lighting Research Program-Demand Responsive Lighting Systems

The Problem	The limitations of lighting control technologies can hinder the widespread deployment of lighting controls for demand response conditions. Lighting controls are often expensive, complex, hard to commission properly and difficult to maintain. The penetration rate of occupancy sensors is low in commercial and residential markets. Photosensor and dimming controls have at best a few percent penetration in the commercial market and virtually no penetration in the residential market.
Proposed Research	Conduct research aimed at resolving the limitations of lighting controls. An element of the LRP involves research into demand-responsive lighting control systems, including dimming controls, load-shed ballast technology, and photosensor technology and controls.
Research Results	The LRP's Demand-responsive Lighting Controls research element developed a prototype Phase-Cut Carrier dimming ballast system, improved the performance of an environmental sensor, demonstrated a successful Bluetooth wireless communications link, developed a proof-of-concept controls system, developed and field-tested a load-shed ballast, developed a performance specification for a new photosensor and related controls, and developed and tested a new advanced daylighting control system. An extensive project web site is available at:
Research Justification and Goals	Supports California's goal to leverage energy efficiency improvements for new and existing buildings per the Integrated Energy Policy Report 2004 Update; and to implement actions outlined in the Governor's Green Buildings Action Plan to improve building performance and reduce grid-based electrical energy purchases in all State and commercial buildings by 20 percent by 2015 per the Energy Action Plan 2005 by: • Demonstrating a proof-of-concept integrated lighting control system that implements major control strategies without requiring additional control wiring. • With ballast manufacturer partners, developing an instant start load-shed ballast and simple retrofit load-shed device for fluorescent lighting systems. - Speed the development and market introductions of these products. • Developing a high-performance, self-commissioning photosensor and lighting control system optimized for common classroom electric lighting solutions and daylighting configurations.
Publications	Retrofit Fluorescent Dimming with Integrated Lighting Controls Final Report ==>http://www.archenergy.com/lrp/demandresp_lighting/deliverable_3.1.10_final-report.pdf Energy-Efficient Load-Shedding Lighting Technology Final Report ==>http://www.archenergy.com/lrp/demandresp_lighting/deliverable_3.2.10_Load-shed_FINAL-RPT.pd
Contractor	Architectural Energy Corporation
Site Location	Project work is being conducted at various locations throughout California.
PIER Manager	Michael Seaman

This project is being conducted by the California Energy Commission's Public Interest Energy Research (PIER) program. PIER supports energy research and development that improves the quality of life in California by bringing environmentally safe, affordable, and reliable energy services and products to the marketplace.

Lighting Research Program-Lighting Performance Metrics, Codes and Standards

The Problem	New ways for lighting to fulfill energy conservation needs have potential to achieve higher performance by developing technologies and practices to capture energy-efficiency opportunities. But without technologies targeted at the specific energy-efficiency gaps in the market, many of these opportunities will be lost.
Proposed Research	Seek ways for new energy-efficient lighting technologies to inform building codes and design practices. The Metrics, Codes and Standards element of the program was designed to fill energy efficiency gaps by capturing energy savings related to specific technologies and applications.
Research Results	The LRP's Metrics, Codes and Standards element determined the energy savings, demand reduction and safety code acceptability of occupancy-based stairwell lighting; tested, analyzed, and determined the potential of electronic ballasts for HID lighting systems as an emerging energy-efficiency technology and provided recommendations for incorporating the technology into state codes and regulations; with a manufacturer partner, analyzed performance standards for low-glare outdoor luminaires for applicability in California and developed and demonstrated a prototype system for outdoor luminaires with improved performance characteristics; and developed an enhanced DALI lighting ballast control standard to operate/control a complete lighting system. An extensive project web site is available at:
Research Justification and Goals	Supports California's goal to leverage energy efficiency improvements for new and existing buildings per the Integrated Energy Policy Report 2004 Update; and to implement actions outlined in the Governor's Green Buildings Action Plan to improve building performance and reduce grid-based electrical energy purchases in all State and commercial buildings by 20 percent by 2015 per the Energy Action Plan 2005 by: • Characterizing the performance of a bi-level lighting system for use in sporadically used spaces. • Measuring performance characteristics of newly-introduced electronic HID ballast-lamp systems, which have a significant potential for energy savings through improved efficiency and dimming control. • Developing an optimized outdoor fixture to improve energy performance and limit night sky pollution. • With the lighting industry, developing a standard lighting control protocol to enable new products and control systems to be developed to reduce energy and peak demand.
Publications	Bi-level Stairwell Fixture Performance Final Report ==>http://www.archenergy.com/lrp/lightingperf_standards/deliverable_5.1.6_Bilevel_Final_Report.pdf The Impact of Potential Lighting Code Changes in Stairwells for Lighting Designers ==>http://www.archenergy.com/lrp/lightingperf_standards/project_5_1_reports.ht
Contractor	Architectural Energy Corporation
Site Location	Berkeley, CA
PIER Manager	Michael Seaman

This project is being conducted by the California Energy Commission's Public Interest Energy Research (PIER) program. PIER supports energy research and development that improves the quality of life in California by bringing environmentally safe, affordable, and reliable energy services and products to the marketplace.

Lighting Research Program-Market Connection

The Problem	Over 23 percent of the electricity used in California is for lighting. California's intense energy conservation challenges, large building inventory, and persistence of strong growth patterns give rise to the urgency of accelerating the availability of energy-efficient lighting technologies well beyond the rate at which normal market forces would proceed. Projects that succeed technically can fail to reach the market or find commercial success because market knowledge is not built into product specifications, communication does not reach appropriate audiences, or research results are not packaged into design tools or specifications used by designers, specifiers, builders or facility managers/owners.
Proposed Research	Conduct the Lighting Research Program (LRP), a systematic research program that creates new lighting technology and products that can save energy, reduce peak demand, and reduce pollution for the citizens of California. This Program encompasses both residential and commercial sectors, as well as outdoor lighting associated with buildings. The Market Connection element is a centralized program-wide approach that improves the LRP's market focus, thereby increasing commercial viability for the Program's technology products. Integrating the research activities with lighting equipment manufacturers assists in introducing products to the market by providing technical projects with consistent product assessment and commercialization recommendations from key lighting market experts.
Research Results	The LRP established a central market connection system for technology transfer activities within each of the technology development projects, achieving program-wide economies and consistent quality. The Market Connection element guided LRP developers of the most market-ready products in the transition from research and development to production and market entry. It provided a consistent set of product-descriptive materials for use in industry reference and public education by the California Energy Commission, individual product developers, and other market actors. The SPOT (sensor placement and orientation tool) software won two innovative product awards at the national Lightfair2005. An extensive project web site is available at:
Research Justification and Goals	Supports California's goal to leverage energy efficiency improvements for new and existing buildings per the Integrated Energy Policy Report 2004 Update; and to implement actions outlined in the Governor's Green Buildings Action Plan to improve building performance and reduce grid-based electrical energy purchases in all State and commercial buildings by 20 percent by 2015 per the Energy Action Plan 2005 by: • Improving the market focus of all LRP research and development projects, thereby increasing the ultimate commercial viability of LRP technology products.
Publications	Program-wide Market Connection Final Report ==>http://www.archenergy.com/lrp/mkt_connection/deliverable_6.1.9_FINAL-RPT.pdf Program Technology and Product Design Tools Final Report ==>http://www.archenergy.com/lrp/mkt_connection/deliverable_6.2.11_FINAL-RPT.pd
Contractor	Architectural Energy Corporation
Site Location	Hayward, CA & Fair Oaks, CA
PIER Manager	Michael Seaman

This project is being conducted by the California Energy Commission's Public Interest Energy Research (PIER) program. PIER supports energy research and development that improves the quality of life in California by bringing environmentally safe, affordable, and reliable energy services and products to the marketplace.

National Lighting Product Information Program and Daylight

The Problem	If PIER participated in collaborative lighting research programs at the national level, California's pathway to technical information about lighting products and emerging technologies could be streamlined and more cost-effective. But to best serve California, the collaborative research projects need to be linked to PIER's strategic goals. Two strong influences on lighting energy efficiency are manufacturer-specific product testing and daylight harvesting, which have been joined as a national research initiative. By accessing that initiative, PIER can cost-effectively address important R&D gaps concerning energy efficient lighting and lead the way to lower-cost natural and artificial lighting solutions for California.
Proposed Research	Affiliate with the Lighting Research Center's National Lighting Product Information Program (NLPIP), a collaborative testing program that provides objective manufacturer-specific information on the energy-efficiency of lighting products. Sponsored by state and federal agencies, it is the only program of its kind. This affiliation also enables PIER to join in the Daylight Dividends initiative, a multi-party research effort that seeks to understand how natural light can reduce the need for energy-consuming artificial lighting and to accelerate the use of daylighting for building energy savings.
Research Results	1. National Lighting Product Information Program (NLPIP) web site and reports are available at: http://www.lrc.rpi.edu/programs/nlpip/index.asp 2. The Daylight Dividend Program (DDP) project web site and reports are available at: http://www.lrc.rpi.edu/programs/daylighting/index.asp
Research Justification and Goals	Supports California's goal to leverage energy efficiency improvements for new and existing buildings per the Integrated Energy Policy Report 2004 Update; and to implement actions outlined in the Governor's Green Buildings Action Plan to improve building performance and reduce grid-based electrical energy purchases in all State and commercial buildings by 20 percent by 2015 per the Energy Action Plan 2005 by: • Offering lower cost to lighting-system owners. • Obtaining manufacturer-specific data on energy efficiency performance of lighting products available for use in California • Developing knowledge of value of daylighting for new and existing buildings in California and methods of using daylight to reduce consumption of energy from artificial lighting.
Publications	NLPIP Specifier Reports, Volume 9, Number 1, "Parking Lot and Area Luminaires" (July 2004) ==>http://www.lrc.rpi.edu/programs/NLPIP/PDF/VIEW/SRParking.pdf NLPIP Specifier Reports, Volume 6, Number 2, Supplement 1, "Lighting Circuit Power Reducers" (Sept. 2005) ==>http://www.lrc.rpi.edu/programs/nlpip/publicationDetails.asp?id=218&type=
Contractor	Rensselaer Polytechnic Institute
Site Location	Troy, NY
PIER Manager	Michael Seaman

This project is being conducted by the California Energy Commission's Public Interest Energy Research (PIER) program. PIER supports energy research and development that improves the quality of life in California by bringing environmentally safe, affordable, and reliable energy services and products to the marketplace.

Profitability, Quality and Risk Reduction Through Energy Efficiency

The Problem	The new housing market in California is booming and the opportunities to create more energy efficient homes must be explored. Developing new builder profit incentives to encourage energy-efficient construction is one such opportunity.
Proposed Research	This research will focus on the development of new builder profit incentives to encourage energy-efficient construction. The program will explore increasing profit incentives through reducing warranty costs, improving mortgage products, and raising the consumer value of energy efficiency by linking it to quality and comfort. The program will develop guidelines for designing residential HVAC systems.
Research Results	Best practices for Heating, Ventilation and Air Conditioning (HVAC) system design in California production home building were incorporated into an HVAC Design Guide applicable during the entire development process, from site planning through construction and occupancy.
Research Justification and Goals	Supports California's goal to improve new and remodeled building efficiency by 5 percent per the Energy Action Plan 2003 by: • Create profit incentives for builders to build energy-efficient homes by linking builder profitability, construction quality, and energy efficiency.
Publications	Profitability, Quality and Risk Reduction through Energy Efficiency ==>http://www.energy.ca.gov/pier/final_project_reports/CEC-500-2005-118.htm
Contractor	Building Industry Institute
Site Location	Santa Monica, CA
PIER Manager	Martha Brook P.E.

This project is being conducted by the California Energy Commission's Public Interest Energy Research (PIER) program. PIER supports energy research and development that improves the quality of life in California by bringing environmentally safe, affordable, and reliable energy services and products to the marketplace.

Prototype Development of a Combined Refrigerator and Electric Water Heater

The Problem	Domestic refrigerators are large users of electricity as well as sources of heat in house interiors. There is a potential to capture and use the waste heat from refrigerators to produce hot water needed in the kitchen. From an energy perspective, a promising idea may be to combine a refrigerator with a water heater.
Proposed Research	This project will develop a cost effective refrigerator which utilizes waste heat from the refrigeration process to heat water, which will then be available for domestic use. This can reduce energy consumption in California homes by providing hot water as a by-product of the refrigerator. Since the heat is exhausted to the water rather than the kitchen, it can also help reduce household cooling loads in summer. Once feasibility studies are complete, two prototypes will be designed, built, tested and evaluated with assistance from a major appliance manufacturer.
Research Results	A prototype was designed and built with assistance from Maytag Corp. A second prototype was designed and built based on additional input and design constraints. The prototypes were tested and found to be somewhat practical, but a major limitation was an overall size constraint, which limited the storage capacity and efficiency of the water heater. Alternative designs which used external storage tanks required plumbing modifications before they could be used. This was found to be a significant problem in the new building and retrofit market. Maytag ultimately decided not to commercialize the product.
Research Justification and Goals	Supports California's goal to develop strategies to achieve additional savings in existing buildings per the Integrated Energy Policy Report 2003 by: • Determining the economic feasibility of combining a refrigerator with a water heater for California residential applications. • Demonstrating the practicality of the combined refrigerator and electric water heater by desiging, constructing and testing two successive full-scale prototype units. • Commercializing the combined refrigerator/water heater.
Publications	Synergistic Water Heating and Distribution Technologies (SWHDT) Program Final Report
Contractor	Davis Energy Group, Inc.
PIER Manager	Chris Scruton

This project is being conducted by the California Energy Commission's Public Interest Energy Research (PIER) program. PIER supports energy research and development that improves the quality of life in California by bringing environmentally safe, affordable, and reliable energy services and products to the marketplace.

Safety Analysis and Testing of a Heat Pump Water Heater Condensate Recovery System

The Problem	Heat pump water heaters are much more energy efficient than resistance water heaters, but they produce condensate as a by-product. This condensate must be routed to an external drain, requiring additional plumbing. This was considered to be a major impediment to the market adoption of heat pump water heaters.
Proposed Research	This project examined the safety of injecting sterilized condensate from a residential heat-pump water heater into the water storage tank. Project tasks include conducting a preliminary hazard analysis, designing a test apparatus, and fabricating and testing the prototype technology.
Research Results	It was found that when the heat pump water heater was operated in an environment that contained some level of volatile organic compounds, such as might be found in a typical residential garage, a low level of these compounds was condensed and injected into the hot water tank, along with the liquid water condensed. The research concluded that levels of toxic condensates, once diluted in the tank, were below hazardous levels. Possible alternate routes for toxic entry, for example if insecticides were sprayed on the heat pump coils, were not evaluated.
Research Justification and Goals	Supports California's goal to develop strategies to achieve additional savings in existing buildings per the Integrated Energy Policy Report 2003 by: • Reducing the barriers to energy efficient heat pump water heaters by eliminating the need for installing a condensate drain.
Publications	Synergistic Water Heating and Distribution Technologies (SWHDT) Program Final Report
Contractor	Davis Energy Group, Inc.
PIER Manager	Chris Scruton

This project is being conducted by the California Energy Commission's Public Interest Energy Research (PIER) program. PIER supports energy research and development that improves the quality of life in California by bringing environmentally safe, affordable, and reliable energy services and products to the marketplace.

Simplified HVAC Controls

The Problem	Programmable thermostats have the potential to produce comfort and save energy but are often not well utilized in low income communities. There is a need for a simpler version of a programmable thermostat which has advanced features but is simple enough to be used by unsophisticated consumers.
Proposed Research	The Simplified Heating, Ventilation and Air Conditioning (HVAC) Controls project objective is to evaluate options for easier to use controls for space conditioning systems and to understand how these measures affect low-income housing energy and appliance use.
Research Results	Researchers conducted surveys and monitored air conditioning use in low income neighborhoods. They then designed, built and deployed a model 'simple' thermostat with the ability to better understand consumer preferences based on input requests. Behavior and energy use of the households having the 'simple' thermostats was monitored. Where the thermostats were used as intended it was found they worked quite effectively. However, in order to reduce their energy costs, many low income households had their thermostat turned off for long periods of time. In these cases the learning thermostat was less effective.
Research Justification and Goals	Supports California's goal to leverage energy efficiency improvements for new and existing buildings per the Integrated Energy Policy Report 2004 Update; and to improve new and remodeled building efficiency by 5 percent per the Energy Action Plan 2003 by: • Reducing cooling energy use buildings, integrating energy-efficient strategies and products with other building elements, and searching for the highest value strategies and technologies for retrofit. • Developing controls which can maintain consumer comfort while maximizing energy conservation. • Increasing consumer heating and air conditioning management choices.
Publications	Energy Efficient Low Income Housing PIER Program Final Report
Contractor	ADM Associates, Inc.
PIER Manager	Chris Scruton

This project is being conducted by the California Energy Commission's Public Interest Energy Research (PIER) program. PIER supports energy research and development that improves the quality of life in California by bringing environmentally safe, affordable, and reliable energy services and products to the marketplace.

BLDGS Projects Completed in 2004

Alternatives to Compressor Cooling: Phase V - Integrated Ventilative Cooling

Contract #: 500-98-024
Contractor: Davis Energy Group, Inc.
Subcontractors: Berkeley Solar Group : Loisos/Ubbelohde : Pacific Gas and Electric Company : ZTECH : Bruce Hackett : Loren Lutzenhiser
Contract Amount: $713,246
Match Amount: $150,437
Contractor Project Manager: David Springer (530) 753-1100
Commission Contract Manager: Philip Spartz P.E. (916) 654-4592
Status: Completed

Project Description:
The purpose of this project is to reduce the peak load of new single-family homes in California transition (mild) and inland climates by using night ventilation cooling to eliminate or substantially reduce compressor-based air conditioning. Other benefits of night ventilation cooling include energy savings, wintertime fresh air ventilation, enhanced security, air filtration for improved indoor air quality, and automatic operation that is quieter than standard forced-air systems.

In this contract (the current phase of a multi-year research program), contractor Davis Energy Group developed a heating, ventilation and cooling (HVC) unit called "NightBreeze" that integrates heating, cooling, ventilation cooling, and fresh air ventilation. The project also constructed and monitored two new homes, designed for optimal summer performance, which use the HVC unit to provide filtered cool night air to the house in lieu of or in addition to central air conditioning. Previous phases of this work developed "Summer Performance Home" architectural design improvements such as increased thermal mass (50% tiled slab floor and 5/8" thick drywall throughout), use of a radiant barrier in the attic, insulated slab edges, and exterior shading of south and west windows.

This project supports the PIER Program objectives of:

- Improving the reliability/quality of California's electricity by reducing peak electrical demand created by compressor-based air conditioning.
- Improving the energy cost/value of California's electricity by reducing energy use and costs created by residential space cooling during summer "heat storms."
- Improving the environment, public health and safety by improving indoor air quality through the HVC unit that automatically introduces filtered cool night air into residences without the need to open windows.

Proposed Outcomes:

1. Develop and demonstrate "integrated ventilation cooling" in two homes in sites representative of transition and inland valley climates (Climate Zones 3 and 12).
2. Develop and refine an integrated, variable-speed, hydronic heating and ventilation-cooling fan coil with damper system, and associated intelligent controls.
3. Demonstrate 100% peak demand savings and 74% energy savings in Climate Zone 3, and 37% demand savings and 60% energy savings in Climate Zone 4.
4. Maintain indoor air quality consistent with American Society of Heating, Refrigerating and Air-Conditioning Engineers (ASHRAE) ventilation standard 62-1989.

Actual Outcomes:

1. Summer Performance Home design principles were successfully demonstrated in homes in Watsonville and Livermore. The houses were monitored for more than one year. The Watsonville house (transition climate zone 3) maintained comfortable temperatures without air conditioning installed. The Livermore house (inland valley climate zone 12) operated its two air conditioners a combined total of 7.4 hours (average of less than 3 minutes per day) during the summer of 2003, which included 15 days with temperatures over 100 degrees F.
2. An integrated heating, ventilation cooling, air conditioning and fresh air ventilation system ("NightBreeze") was built, tested, and successfully demonstrated. The system includes a hot water air handler, damper, and controls. The air handler utilizes an electronically commutated motor (ECM) that provides quiet variable speed heating, ventilation cooling, and fresh air ventilation fan energy use for heating that is less than half that of typical gas furnaces. An outside air damper (economizer) selects between outside air and return air, filters both, and provides air relief to the outside so that windows do not have to be opened. A "user friendly" wall display unit (thermostat) integrates control of all heating, ventilation cooling, air conditioning, and fresh air ventilation functions. The wall display unit predicts future temperature conditions in order to provide information to the user about optimal comfort settings, adjusting ventilation cooling rates to minimize fan energy use, avoiding overcooling, and minimizing standard air conditioner operation.
3. The specific demand reduction and energy savings goals for Climate Zones 3 and 12 described in the project proposal were substantially achieved. The proposed goal of reducing peak load by 100% in Climate Zone 3 was verified by the Watsonville demonstration house, which maintained comfort without standard vapor compression air conditioning. The 74% energy savings proposed for Climate Zone 3 could not be demonstrated because air conditioning energy use for a standard house built to Title 24 standards in that zone is almost non-existent. In retrospect, Climate Zones 2 or 4 would have been better subjects for demonstration of Alternatives to Compressor Cooling (ACC) design strategies in transition climates. The performance goals for Climate Zone 12 were exceeded, with a 50% peak demand reduction and 70% energy savings established by monitoring and simulations of the Livermore house.
4. Winter fresh air ventilation with the "NightBreeze" system precisely meets ASHRAE Standard 62 air change requirements while using less fan energy than any other mechanical fresh air system available.

Project Status:

This contract is complete.
Final Report Title: Alternatives to Compressor Cooling, Phase V: Integrated Ventilation Cooling
Publication Number: 500-04-009
Publication Date: February 2004
PIER Web Location: www.energy.ca.gov/pier/final_project_reports/500-04-009.html

A follow-on PIER contract is further developing the NightBreeze ventilation cooling technology for integration with gas furnace-based systems and service to multiple zones from a single system (see PIER contract 500-02-026). More information on this hydronic ventilation cooling technology is available at:

⇒ www.davisenergy.com/nb_page.htm

Assessing Building Vulnerability to Chemical and Biological Threats

Contract #: 500-01-034
Contractor: Lawrence Berkeley National Laboratory
Contract Amount: $250,000
Contractor Project Manager: Richard Sextro (510) 486-6295
Commission Contract Manager: Steve Williams (916) 654-4050
Status: Completed

Project Description:
Preparation and advanced planning can reduce the likelihood and severity of chemical, biological, and radiological attack. However, it can be difficult for building managers to determine key vulnerabilities and prioritize implementation of mitigation strategies, because most information that treats these subjects is intended for technical consultants or design professionals. The purpose of this project was to develop a set of guidelines and assessment procedures to aid consultants and facility managers in assessing and reducing building vulnerabilities for public- and private-sector buildings across California. The mitigation methods were guided by the related goals of improving energy efficiency and indoor air quality.

This project supports the PIER Program objective of:

- Improving the environment, public health and safety by providing tools to protect buildings against chemical and/or biological attack, while minimizing the impact on building energy use.

Proposed Outcomes:

1. Develop and test procedures for assessing the vulnerability of buildings to chemical or biological agent attack, including the impact on building energy systems.
2. Produce a guidance document for vulnerability assessment and mitigation for high profile buildings to reduce the likelihood and effectiveness of potential attacks, with consideration for impacts on the building energy systems.

Actual Outcomes:

1. The research team developed and tested procedures for assessing the vulnerability of buildings to chemical and biological attack.
2. The Building Vulnerability Assessment and Mitigation Program (BVAMP) now provides facility managers with an easy-to-use software tool for identifying basic steps to secure buildings and develop building specific mitigation plans. BVAMP develops building-specific advice for:
    - Improving emergency preparedness.
    - Developing building system control protocols for use during emergencies.
    - Planning for shelter-in-place responses.
    - Restricting access to building systems and information.

Project Status:
The project is complete and the assessment tool is available at:

⇒ http://securebuildings.lbl.gov/BVAMP.html

The project Final Report will be released in the first quarter of 2005.

Building Specification Guidelines for Energy Efficiency

Contract #: 500-98-027
Contractor: Eley Associates, Inc.
Subcontractors: Taylor Engineering : Cathrine Cooper : SMWM : SDV/ACCI : After Image : John Raeber
Contract Amount: $233,280
Contractor Project Manager: Charles Eley (415) 957-1977
Commission Contract Manager: Chris Scruton (916) 653-0948
Status: Completed

Project Description:
The purpose of this project is to develop reference construction specifications to encourage the use of energy-efficient equipment and technologies in commercial buildings. The focus is on efficient, cost-effective equipment and technologies that lack adequate or well-known information. This project is lowering the barriers to specifying energy efficient equipment and technologies for commercial buildings by:

- Simplifying the specifications of some technologies.
- Addressing project commissioning and monitoring within each of the technologies.
- Providing specifications for advanced cost-effective technologies.
- Addressing integrated controls and open protocols for commercial lighting and heating, ventilating and air conditioning (HVAC) systems.
- Disseminating the new specifications to the construction industry through the Internet.

The specifications have been tested by the Contractor's team, reviewed by building design professionals, and made available on the Internet. The format facilitates the use and incorporation of the specifications into construction documents by design professionals. In addition, they help equipment manufacturers to understand what they need to build to satisfy the efficiency market.

This project supports the PIER Program objective of:

- Improving the energy value of California's electricity by influencing standard construction practices to reduce future building and system energy use in the commercial sector while also promoting better occupant health and comfort.

Proposed Outcomes:

1. The specifications will promote energy efficient design of commercial buildings by providing a comprehensive and integrated source for up-to-date information on the most efficient and cost effective equipment, technologies and operating strategies.
2. Reduce annual building system (e.g., lighting, HVAC) energy costs of the building whose design used the specifications by at least 5 percent.

Actual Outcomes:

1. The specifications promote energy efficient design of commercial buildings by providing a comprehensive and integrated source for up-to-date information on the most efficient and cost effective equipment, technologies and operating strategies.
2. If followed, the specifications would likely reduce annual building system (e.g., lighting, HVAC) energy costs of a building by at least 5 percent.

Project Status:
The final revision of the specifications is available for download from the contractor's website:

⇒ www.eley.com/specs/

Final Report Title: Reference Specifications for Energy and Resource Efficiency
Publication Number: 500-04-015
Publication Date: March 2004
PIER Web Address: www.energy.ca.gov/pier/buildings/projects/500-98-027-0.html

California Commissioning Collaborative

Contract #: 500-02-030
Contractor: Portland Energy Conservation, Inc.
Contract Amount: $195,000
Contractor Project Manager: Phil Welker (503) 595-4475
Commission Contract Manager: Martha Brook P.E. (916) 654-4086
Status: Completed

Project Description:
The California Commissioning Collaborative (CCC) is a long-term multi-sponsor program dedicated to increasing the practice of building commissioning in California. The CCC promotes commissioning education, training, stronger building codes and commissioning standards in the new and retrofit markets. CCC members are working to address the barriers to commissioning in an effort to improve the energy efficiency, comfort and indoor air quality of public and private commercial buildings. Portland Energy Conservation Incorporated (PECI) is currently administering the CCC. This collaborative research agreement will formalize the PIER Buildings Program's participation in the CCC.

This project supports the PIER Program objective of:

- Improving the energy cost/value of California's electricity by increasing building energy efficiency through the processes of new and retro-commissioning.

Proposed Outcomes:

1. The California Commissioning Collaborative will conduct outreach activities, including the market transfer of PIER's commissioning-related research, to broadcast the benefits of commissioning.
2. The California Commissioning Collaborative will critically review and shape the research products resulting from California's publicly-funded building commissioning-related R&D.
3. The California Commissioning Collaborative will support the development of the equipment acceptance requirements that will be included in the 2005 Nonresidential Building Energy Efficiency Standards (Title-24).

Actual Outcomes:

1. Conducted outreach activities, including the market transfer of PIER's commissioning-related research, to broadcast the benefits of commissioning. An on-line library of commissioning-related documents has been developed. These documents will provide the background research needed to convince building owners and operators of the benefits of commissioning as well as research needed to develop tools for commissioning providers. The mechanism to produce quarterly news briefs has also been developed. These news briefs will communicate the most up-to-date information in the commissioning industry to all interested parties.
2. Critically reviewed the research products resulting from California's publicly funded building commissioning-related R&D.
3. Developed and field-tested the equipment acceptance requirements that will be included in the 2005 Nonresidential Building Energy Efficiency Standards (Title-24).

Project Status:
This project is complete. The on-line library and other relevant commissioning information are available at the California Commissioning Collaborative website:

⇒ www.cacx.org

Design Refinement and Demonstration of a Market-Optimized Residential Heat-Pump Water Heater

Contract #: 500-98-028
Contractor: TIAX LLC
Subcontractors: EnviroMaster International
Contract Amount: $756,095
Match Amount: $300,000
Contractor Project Manager: Robert Zogg (617) 498-6081
Commission Contract Manager: Philip Spartz P.E. (916) 654-4592
Status: Completed

Project Description:
The purpose of this project was to design, test and demonstrate a market-optimized residential electric heat pump water heater (HPWH). The primary objectives of this project were to:

1. Reduce its total installed cost from $1,200 to $875 by reducing both the manufacturing and installation costs of the HPWH unit.
2. Make the water heater capable of achieving at least a 2.0 energy factor, the standard performance measure for water heaters used by the U.S. Department of Energy (DOE).
3. Address reliability and durability concerns.

With funding provided by DOE, Oak Ridge National Laboratory (ORNL) provided durability testing on ten prototypes under laboratory conditions simulating ten years of normal operation. The TIAX team, in cooperation with several California utilities, field-tested twenty prototype units in residences throughout the State.

This project supports the PIER Program objective of:

- Improving the energy cost/value of California's electricity by providing a low-cost, highly reliable and durable residential heat-pump water heater.

Proposed Outcomes:

1. Reduce the total installed cost of residential heat pump water heaters from $1,200 to $875 (based on annual production volumes of 10,000 units or more).
2. Design, test and demonstrate a heat-pump water heater capable of achieving at least a 2.0 Energy Factor using the water heater testing procedure prescribed by DOE.

Actual Outcomes:

1. Using costs supplied by manufacturing partner EMI and based on their projection to annual production volumes of 10,000 units or more, the total installed cost of the residential HPWH developed under the project is between $1,100 and $1,200. This is primarily due to manufacturing costs. A public production readiness plan with additional relevant economic information has been produced. Installation costs for the field test units were generally much closer to the original goal, as the HPWH was designed to be a "drop-in" replacement for a conventional electric water heater and has nearly the same physical dimensions – 60" inches tall and 22.25" in diameter. Half of the field test installations were straightforward, ranging between 4.5 and 6 hours. No installation required more than 8 hours.
2. The HPWH tested according to the DOE Energy Factor laboratory procedure gave a result of 2.4 ten units measured by ORNL with a slightly modified test gave factors ranging from 1.8 to 2.1. Average energy savings of the 20 units was 35.9%, based on a comparison with simulated electric-resistance water-heater performance.
3. Reliability of the field test units was not as good as hoped for at the outset, primarily due to control issues with the field tested prototype units. Most test units were regarded favorably by homeowners.
4. Manufacturer EMI has been marketing their HPWH product under the "WatterSaver" brand. Product information is at:

⇒ www.enviromaster.com/watter_saver/
California's potential market share of this electric technology is about the same size as neighboring states that depend almost entirely on electric-resistance units for domestic water heating. An information dissemination plan discussing promotion of the technology was written for the project.

Project Status:
The project is complete.
Final Report Title: Design Refinement and Demonstration of a Market-Optimized, Residential Heat-Pump Water Heater
Publication Number: 500-04-018
Publication Date: April 2004
PIER Web Location: www.energy.ca.gov/pier/buildings/projects/500-98-028-0.html

Development of an Advanced Indirect Heat Exchange Module

Contract #: 500-98-022
Contractor: Davis Energy Group, Inc.
Subcontractors: Pacific Gas and Electric Company : Refrigeration Technology, Inc. : CoolSmart LLC : James Ramos & Associates
Contract Amount: $248,719
Match Amount: $136,169
Contractor Project Manager: Richard Bourne (530) 753-1100
Commission Contract Manager: Philip Spartz P.E. (916) 654-4592
Status: Completed

Project Description:
The purpose of this project was to design an improved version of an indirect-direct evaporative cooler (IDEC) with better efficiency, cost, and reliability than previous designs. The researchers developed an optimized indirect heat exchanger to allow better airflow than previous two-stage evaporative cooler designs, and a new cabinet design to improve maintainability. A survey of two-stage evaporative cooler owners was conducted to provide input on the new design, and prototypes were laboratory-tested to assess their performance.

This project supports the PIER Program objectives of:

- Improving the reliability/quality of California's electricity by developing an air conditioning technology that contributes considerably less to peak electrical demand than conventional air conditioning units.
- Improving the energy cost/value of California's electricity by refining a new energy efficiency technology to make it more market ready.

Proposed Outcomes:

1. Improve design flexibility by developing an improved indirect heat exchanger with potential for variable assembled width to provide a range of cooling capacities.
2. Improve design quality by eliminating adhesives in the heat exchanger assembly, and by eliminating leakage and corrosion using a molded cabinet with top mount blower.
3. Reduce initial cost by $300 using 1) a one-piece molded cabinet with integral blower housing and water sump, and 2) a more rapid heat exchanger fabrication process.
4. Lower operating costs at least 5% by increasing evaporative effectiveness and reducing power consumption versus a second-generation IDEC design.

Actual Outcomes:

1. At project completion, the researchers developed and tested a new counterflow heat exchanger with superior performance. The innovative indirect heat exchanger uses a variable number of plate pairs that can be assembled quickly to any desired width to provide different amounts of cooling capacity.
2. The project achieved a projected cost savings of $386 per unit, exceeding the original goal. This amount will likely translate to a $600 to $800 reduction in price to the purchaser, substantially enhancing IDEC marketability.
3. Test results show that overall evaporative effectiveness of the new unit exceeds the second-generation IDEC design by 9.5%. Overall efficiency gains were even more impressive. Across a comparable speed range, Energy Efficiency Ratios (EERs) for the new design averaged 90% higher than the second-generation unit.
4. The researchers used a MICROPAS two-stage evaporative cooler model, in conjunction with test data, to compare IDEC and conventional cooling system performance for two building types in eight California climate zones. The analyses estimated 89 to 95% IDEC annual energy savings potential, accompanied by 80 to 89% peak demand savings.

Project Status:

The project is complete.
Final Report Title: Development of an Improved Two-Stage Evaporative Cooling System
Publication Number: 500-04-016
Publication Date: March 2004
PIER Web Location: www.energy.ca.gov/pier/buildings/projects/500-98-022-0.html

One-page Fact Sheet Title: Gen3 Indirect-Direct Evaporative Cooler
Web Location: www.davisenergy.com/pdf/IFS0603.pdf.

U.S. Patent: 5,664,433 (Issued September 1997).

Energy Efficient and Affordable Small Commercial and Residential Buildings for a Growing California

Contract #: 400-99-011
Contractor: Architectural Energy Corporation
Subcontractors: Battelle Northwest Laboratories : The National Institute of Standards and Technology : Purdue University : Massachusetts Institute of Technology : Oak Ridge National Laboratory : Schiller Associates : Heat-Timer Corporation : Newport Design Consultants.
Contract Amount: $5,422,000
Match Amount: $6,387,000
Contractor Project Manager: Donald Frey (303) 444-4149
Commission Contract Manager: Chris Scruton (916) 653-0948
Status: Completed

Program Description:
The purpose of the Energy Efficient and Affordable Small Commercial and Residential Buildings Program was to develop and demonstrate technologies to improve energy efficiency. The program addressed such issues as peak electrical demand, healthful indoor environments, and California building affordability. It also strengthened the energy efficiency industry in California by providing new jobs and growth opportunities for companies that provide technology, systems, software, design, and building services. High impacts and direct benefits for every research dollar were provided by projects that are synergetic, market-oriented, and supported by industry. The Program consisted of 6 elements, each element with one or more projects.

This programmatic contract supports the PIER Program objectives of:

- Improving California's economy by stimulating the development of new marketable energy-efficient technologies and by reducing energy expenses, leaving more financial resources for other uses.
- Improving the reliability and quality of California's electricity by reducing peak demand, leading to lower infrastructure costs and better reliability.
- Improving California's natural environment by reducing air pollution and water use related to energy production.

Description of Element 1 – Program Management:
This element provided program administration for all technical elements and overall coordination and integration of all the subcontractors and work tasks. The prime contractor managed the technical work in addition to handling all administrative activities. This element also included outreach efforts to establish market connections between the research teams and industry.

Proposed Outcomes for Element 1:

1. Manage industry and public advisory groups to maximize practical input.
2. Establish public and team web sites to communicate project results and manage project activities.
3. Conduct outreach efforts to facilitate adoption in the marketplace.

Actual Outcomes from Element 1:

1. The contractor web site is fully operational with descriptions of each project. Final project reports and major deliverables are also available for download at the site at:
   ⇒ http://aes1.archenergy.com/cec-eeb/
2. A Project Advisory Committee of involved professionals was formed and has had approximately 10 meetings, providing input and guidance as needed. A multi-day meeting sponsored by the program and devoted to diagnostics tools was attended by representatives from controls companies, research organizations, utilities, government and publicists.
3. Biweekly conference calls with key members of the technical teams were held to assess and maintain project progress and solve problems.

4. Regular monthly reports, critical project reviews, and two annual reports and a final report were generated.

Description of Element 2 – Automated Commissioning and Diagnostics:
This program element's work scope involves the following technical projects:

- Fault Detection and Diagnostics for Rooftop Air Conditioning diagnoses problems automatically using sophisticated algorithms to compare reference performance with actual performance. Ultimately the software is expected to be incorporated into unit controllers.
- Equipment Scheduling and Cycling used a Non-Intrusive Load Monitor (NILM) located at a power service entrance or motor control center to automatically identify which equipment is operating at a given time and how much energy it is consuming. It can also be used to identify malfunctioning equipment.
- Air Handling Unit and VAV Box Diagnostics use rule based and statistical analysis techniques to automatically detect problems in these devices. The diagnostic algorithms are embedded in the unit controllers to reduce control system communication requirements.
- Demonstration of the Whole Building Diagnostician (WBD) involved field testing of this software tool, which is currently able to diagnose problems and estimate economic impacts of air handler economizer faults.
- Pattern Recognition Based Fault Detection and Diagnostics is an extension of the ENFORMA diagnostic tool, enabling it to automatically draw conclusions about the performance of boilers, chiller plants, and cooling towers.
- Enhancement of the Whole Building Diagnostician (WBD) extended the energy analysis capabilities of the WBD, allowing peer comparisons between different buildings and normalizing performance based on user defined variables.
- Enabling Tools for testing the Whole Building Diagnostician (WBD) on the Virtual Cybernetic Building Testbed, allowed the WBD to process information from a simulated building mechanical system, including various simulated equipment faults, to test the WBD's ability to detect those faults.

Proposed Outcomes for Element 2:

1. Development and demonstration of FDD will accelerate commercialization and deployment and ultimately result in energy and comfort benefits in buildings with package rooftop equipment.
2. NILM development and deployment will lead to improved equipment operation, fault detection, and equipment energy use.
3. VAV and AHU diagnostics integrated with building control systems will lead to load reductions and better comfort in buildings where deployed.
4. WBD deployment will allow automatically diagnosis of the nearly ubiquitous outside air economizer problems. The WBE enhancement will allow flexibility in relating energy consumption to variables other than temperature.
5. Pattern recognition based software will facilitate operator response in repairing central plant equipment.
6. The enabling tools will be valuable to developers of diagnostic tools for product testing.

Actual Outcomes from Element 2:

1. The AHU and VAV box diagnostics and the Rooftop Unit Diagnostics have entered a final development stage for commercialization. Significant market partners in the controls industry are in collaboration, and several of them are expected to develop commercial releases if the results are favorable.
2. The WBD and WBE have undergone field testing at 3 sites in California. The contractor is pursuing further demonstrations with federal funding.
3. Several of the technologies, including the pattern recognition techniques and the AHU diagnostics have been selected for incorporation in a 'diagnostic server' application which will be

made available to owners and second party service providers. A multinational controls company is extremely interested in the product.

4. A small technology company is being formed to produce and market the NILM.

Description of Element 3 –Advanced Load Management and Controls:
This program element's work scope involves the following technical projects:

- Demand-Controlled Ventilation (DCV) Assessment analyzed the potential of carbon dioxide (CO_2) sensors to replace fixed ventilation requirements in order to improve indoor air quality and save energy. It also identifies specific applications and climate zones where DCV will have the best potential.
- Night Ventilation with Building Thermal Mass investigated the use of cool night air to cool the mass of a building, which can lower the need for cooling during hot daytime hours and reduce peak electric loads. It also investigated applications of mechanical pre-cooling strategies.
- Smart Load Control and Grid-Friendly Appliances are devices which can detect conditions of electrical system stress and automatically turn off appliances in response. This project investigated the feasibility of local grid stress detection.
- Extending BACnet for Lighting and Interfacing Building Systems with Utilities developed the ability of BACnet facility management systems to control lighting loads and to respond to price or load shedding signals from utilities.
- Aggregated Load Shedding using Non-Intrusive Load Monitor (NILM) investigated the ways buildings can reduce electrical demand while still maintaining comfort conditions.

Proposed Outcomes for Element 3:

1. Use of Demand Control Ventilation and Nighttime Cooling will reduce energy use, demand, and potentially improve indoor air quality in buildings.
2. Extensions of BACnet will facilitate intelligent control of more of a buildings functions leading to better demand responsiveness and grid reliability.

Actual Outcomes from Element 3:

1. Both DCV and Nighttime Cooling are being evaluated by a major controls company for integration with its controllers. Guidelines for DCV are helping designers to understand what situations make sense for this control scheme, and which climate zones offer the best opportunities. Nighttime cooling strategies will be integrated with mechanical cooling strategies to reduce peak loads.
2. Lighting and Utility Industry coordination and software standards were developed by the BACnet standards group. The standards are now being used to develop and upgrade commercial products.

Description of Element 4 from Alternative Cooling Technology and Strategy:
This program element's work scope involves the following technical projects:

- Assessment and Field Testing of Ventilation Recovery Heat Pumps.
- Residential Hydronic Radiant Heating and Cooling System Demonstration.
- Design Methods and Guidelines for Natural Ventilation in California.

Proposed Outcomes for Element 4:

1. The residential radiant hydronic heating and cooling system investigation will demonstrate the potential benefits this building method provides for demand and energy reduction, which may lead to more widespread acceptance of this type of comfort control system.
2. Software tools for modeling of naturally ventilated buildings may lead to more widespread development and use of low energy natural and hybrid ventilation systems.

Actual Outcomes from Element 4:

1. Field testing and calibration of simulation models for ventilation recovery heat pumps were conducted in California schools. This equipment was shown to have little or no benefit in most California climates.

2. Comparison of energy use and comfort characteristics was made of a house using various combinations of forced air and hydronic radiant slab heating and cooling. The conclusion is that the technique of hydronically cooling floor slabs has an enormous potential to reduce peak cooling loads in California. Floor temperatures are not low enough to produce condensation or comfort problems. Night ventilation, which cools other parts of the building mass, enhances the cooling demand reduction.
3. A report on prior work along with a suitability analysis for California climates is aiding designers in knowing where to use this technique in California. The natural ventilation software design tool was submitted to expert review, which found it useful in design of a Santa Cruz school. Further development of the tool is ongoing.

Description of Element 5 – Energy Efficient Construction Technology:
This program element's work scope involves the following technical task:

- Building-Integrated Photovoltaics investigates the effects on PV performance when they are integrated with vertical building envelope components. Some of the potential factors are orientation, shading and temperature effects.

Proposed Outcome for Element 5:

1. This project quantifies the performance expectations for photovoltaic cells when integrated into residential and commercial building curtain wall construction, which will lead to more accurate design information.

Actual Outcome from Element 5:

1. The photovoltaics were installed and the performance monitored and analyzed. The project uncovered significant inaccuracies in widely used simulation software.
   The project also determined that vertically oriented photovoltaics are generally not cost effective.

Description of Element 6 – Impact Assessment of Project Results:
This program element involved the development of a standard methodology for predicting energy impacts of technology development and adoption.

Proposed Outcome for Element 6:

1. By assessing the potential impacts of projects or developments on energy use in California this project will help to guide where scarce research funds can provide the maximum benefit.

Actual Outcome from Element 6:

1. The methodology was developed and presented for review. The method may prove to be useful for assessing the future benefits of technological innovations.

Program Status:
All program activities have been completed.
Final Report Title: Energy Efficient and Affordable Commercial and Residential Buildings Program
Publication Number: 500-03-096
Publication Date: November 2003
Final Report Attachments Associated with this Project:

- Building Integrated Photovoltaics
- AHU and VAV Box Diagnostics
- Enabling Tools
- Demand Controlled Ventilation Assessment
- Link to the Attachment Page
- Fault Detection and Diagnostic for Rooftop Air Conditioners
- Enhancement of the Whole Building Diagnostician
- Smart Load Control and Grid-Friendly Appliances
- Aggregated Load Shedding

- Design Methods and Guidelines for Natural Ventilation
- Ventilation Energy Recovery Heat Pump Assessment
- Equipment Scheduling and Cycling
- Pattern Recognition Diagnostics
- Residential Hydronic Radiant Cooling and Heating Assessment
- Whole Building Diagnostician Demonstration
- Night Ventilation with Building Thermal Mass
- Extending BACnet for Lighting and Utility Iterfacing
- Impact Assessment Framework

PIER Web Address: www.energy.ca.gov/pier/buildings/projects/400-99-011-1.html

Instrumented Home Energy Rating and Commissioning

Contract #: 500-98-033
Contractor: Lawrence Berkeley National Laboratory
Contract Amount: $710,000
Match Amount: $137,000
Contractor Project Manager: Max Sherman (510) 486-4022
Commission Contract Manager: Chris Scruton (916) 653-0948
Status: Completed

Project Description:
The purpose of this project was to develop residential building commissioning guidelines and to demonstrate the value of commissioning services on residences in California. The energy performance of the most significant systems and components of a building were evaluated, and diagnostics and audit tools developed for use in commissioning these systems and components. A set of guidelines for applying the diagnostic tools was developed. These guidelines provide the groundwork for a residential commissioning industry.

This project supports the PIER Program objectives of:

- Improving the value of California's electricity by helping consumers optimize the energy consuming systems in their home to perform at optimal efficiency.
- Strengthening the California economy by creating jobs in the commissioning field while increasing the disposable income of Californians by reducing their energy costs.
- Improving the reliability of California's electrical supply by reducing residential peak electrical demand.

Proposed Outcome:

1. This project will provide information essential for developing a residential commissioning industry in California. A typical California house has 28 percent duct leakage, is 15 percent low on refrigerant charge, and has only 85 percent of needed evaporator airflow. Diagnosing and repairing the systems in this typical house will reduce electricity use by 14-18 percent while providing a more comfortable and healthful indoor environment. Peak electrical demand will typically be reduced by 22-24 percent.

Actual Outcomes:

1. Commissioning guidelines were completed.
2. An annotated bibliography on building commissioning was completed.
3. A draft metrics and diagnostics report was completed.
4. Laboratory and field study work was completed.
5. Four Project Advisory Committee (PAC) meetings and one user workshop were held.

Project Status:
The project has been completed.
Final Report Title: Instrumented Home Energy Rating and Commissioning
Publication Number: 500-04-012
Publication Date: February 2004
PIER Web Location: www.energy.ca.gov/pier/buildings/projects/500-98-033-0.html

Integrated Energy Systems-Productivity and Building Science

Contract #: 400-99-013
Contractor: New Buildings Institute, Inc.
Subcontractors: Heschong Mahone Group : Eley Associates, Inc. : Architectural Energy Corporation : GARD Analytics, Inc. : RLW Analytics, Inc.
Contract Amount: $5,876,972
Contractor Project Manager: Cathy Higgins (509) 493-4468
Commission Contract Manager: Don Aumann (916) 654-4588
Status: Completed

Program Description:
The purpose of the Integrated Energy Systems Productivity and Building Science Program is to promote develop energy-efficient systems solutions through integrated systems research. The project has one administrative element and six technical elements. Each technical element is designed to fill major gaps in the existing body of building science knowledge. It is not the individual component, but how they are assembled into and operated within a building system, that determines energy efficiency. The contract term of the technical projects is August 2000 to August 2003, with the contract completion by March 31, 2004.

This programmatic contract supports the PIER Program objectives of:

- Improving the energy cost/value of California's electricity by allowing energy-saving measures to be integrated into the early design of a building, thereby making energy-efficient measures more cost effective.
- Improving the reliability/quality of California's electricity by reducing peak demand and improving load factor, leading to reduced infrastructure costs and system reliability risks.
- Improving the State's economy by developing energy-efficient solutions that also increase worker/student productivity or increase retail sales.

Description of Element 1 – Administration, Management and Market Connections:
The purpose of this element is to provide program administration for all technical elements and provide overall coordination and integration of all the subcontractors and work tasks. The prime contractor manages the technical work in addition to handling all administrative activities (e.g., contracts, billing, reporting, tracking, etc.) to ensure that all tasks are completed within allocated budget and schedule. This element also includes outreach efforts to establish market connections between the teams completing the research and the users of the research results.

Proposed Outcomes for Element 1:

1. Deliverables on time and within budget.
2. Public and team web sites to communicate project results and manage project activities.
3. Outreach efforts that facilitate adoption in the marketplace.

Actual Outcomes from Element 1:
NBI completed the final report for the technical projects in October 2003 (publication number: P500-03-082) and it is posted on the PIER Buildings Program web site (www.energy.ca.gov/pier/reports/500-03-082.html), together with 33 attachments that include several design guidelines, numerous project reports, and technical appendices. In addition to completing the final report, NBI conducted extensive administrative tasks (manage subcontracts, issue bills, and produce reports) completed numerous activities related to market connections. Most of the detailed findings and documents can be found on the contractor's website (www.newbuildings.org/pier).

Description of Element 2 – Productivity and Interior Environments:
The purpose of this element is to establish actual measurements of the productivity and energy values of daylighting, natural ventilation and high quality lighting in the operation of commercial buildings. The project also seeks to establish and refine a field methodology that can successfully make a compelling

association between human performance criteria and building characteristics. Validation and quantification of the productivity value of energy efficiency measures will likely motivate decision-makers to include these measures in buildings. The researchers are investigating these issues in the following facility types: schools, retail outlets, and offices.

Proposed Outcomes for Element 2:

1. Data correlating reduced building energy costs with improved student performance, increased retail sales, and improved office and manufacturing worker productivity.
2. Reduce whole building energy use by increasing use of daylighting by motivating decision-makers to demand daylighting in their buildings.
3. Develop a field methodology that can successfully link human performance to building characteristics.

Actual Outcomes from Element 2:

The final task reports are complete with major findings including:

1. Task 2.2, Reanalysis of Daylighting in Schools study (publication number: P500-03-082-A3): 1) The lowest possible estimate for the impact of daylight on student learning is a 7 percent increase in learning rates between those classrooms with the least to the most daylight. The highest estimate is 37 percent. 2) Daylighting conditions, operable windows and air conditioning were not significant in predicting student absences.
2. Task 2.3, Daylighting and Retail Sales (publication number: P500-03-082-A5): 1) Daylit stores in this chain experienced an average of 0% to 6% increase in sales compared to non-daylit stores. 2) Daylight was found to be as reliable a predictor of sales (as indicated by the partial R^2 for the variables) as other more traditional measures of retail potential, such as parking area, number of local competitors, and neighborhood demographics. 3) During the California power crisis of 2001, when the chain operated its stores at half lighting power, its daylit stores had an average 5.5% increase in sales relative to its non-daylit stores. 4) Along with an increase in average monthly sales, the daylit stores were also found to have 1% to 2% increase in the number of transactions per month. 5) Stores with the most favorable daylighting conditions had a 40% increase in sales compared to non-daylit stores, consistent with the findings of the 1998 study. 6) No seasonal patterns to this daylight effect were observed.
3. Task 2.4, Daylighting in Schools (publication number: P500-03-082-A7): 1) The Daylight Code variable used in the previous schools studies was not significant in predicting student performance for Fresno. 2) The window characteristics have a great deal of explanatory power relative to student performance. 3) The visual environment is extremely important for learning, with significant impacts from view, glare, sun, and sun control. 4) The acoustic environment is extremely important for learning. 5) Poor ventilation and indoor air quality appear to negatively affect student performance. 6) Some classrooms with a high Daylight Code are performing extremely well in Fresno. 7) Operable windows were not found to be associated with better student performance in Fresno.
4. Task 2.5, Daylighting in Manufacturing: Project was cancelled because no suitable project partner was available. The funding was put into Task 2.6, Daylighting in Offices, adding a second test site.
5. Task 2.6, Daylighting in Offices (publication number: P500-03-082-A9): 1) Daylight illumination levels were significant and positive in predicting better performance on a test of mental function and attention. 2) Daylight illumination levels were not significant for the visual acuity tests or long-term memory test. 3) An ample and pleasant view was consistently associated with better office worker performance. 4) Glare from windows was associated with decreased office worker performance. 5) Ventilation and indoor air temperature varied in their impacts on worker performance. 7) The natural log of illumination and the daylight illumination level of the previous hour had the best fit in predicting performance. 8) Physical comfort conditions were an important component of models predicting office worker performance. 9) Office worker reports of better health conditions were strongly associated with better views.
6. The research team presented project results at four conferences.

Description of Element 3 – Integrated Design of Large Commercial HVAC Systems:
The purpose of this element is to develop design guidelines for large commercial heating, ventilation and air conditioning (HVAC) systems, focusing on variable-air-volume systems with chilled water plants. While covering only a minority of all systems installed in California, this is the most common type of large HVAC system and accounts for an estimated 20 to 25 percent of the State's cooling capacity.

This element consists of the following five research projects within the central theme of integrated design of large commercial HVAC systems:

1. Field studies.
2. Building science solutions.
3. Statewide energy impacts.
4. Findings and draft recommendations.
5. Guidelines for integrated HVAC system design.

Proposed Outcomes for Element 3:

1. Develop a set of design guidelines to promote the use of advanced, integrated design strategies in new construction and retrofit projects.
2. Achieve a 25 percent HVAC savings in the target building population, with the total demand savings of about 4.1 megawatts (MW) and energy savings of about 4100 MWh/yr.

Actual Outcomes from Element 3:
The Advanced Variable Air Volume System Design Guide (publication number: P500-03-082-A11) is complete with major findings including:

1. Variable-air-volume (VAV) reheat systems serve approximately 50% of the large office commercial construction market.
2. Implementing strategies in the Design Guidelines will result in HVAC electricity savings estimated to be 25%, corresponding to 12% of total building electricity consumption. Natural gas heating savings are estimated to be 41% of heating energy.
3. Most systems operate at part load the majority of the time. Systems and controls must be designed to be efficient across the full range of operation. This can be achieved by carefully sizing the system components (e.g., terminal units) to make sure they provide comfort and code-required ventilation while limiting the fan and reheat energy at part load. It also requires integrating the controls at the zone to the controls at the air-handling unit and cooling/heating plants to make the system respond efficiently to changes in demand.
4. Early design issues are most critical.
5. Apply the following key design principles to achieve energy savings:
    1) Reduce design system static pressure.
    2) Employ demand-based static pressure reset.
    3) Use low-pressure plenum returns with relief fans.
    4) Employ demand-based, supply temperature reset to reduce reheat energy and extend economizer effectiveness.
    5) Design fan systems to turn down and stage efficiently.
    6) Optimally size terminal units to balance the energy impacts of pressure drop and minimum air flow control.
    7) Set terminal unit minimums as low as required for ventilation and use intelligent VAV box control schemes to prevent stratification during heating.
    8) Employ demand-based ventilation controls for high-density occupancies.
    9) Design conference rooms and other high-density occupancies to provide ventilation without excessive fan energy or reheat.

10) Design 24/7 loads to allow efficient system turn down and use of economizer cooling.

6. Project findings have been presented in HPAC Magazine and at American Society of Heating, Refrigerating and Air-Conditioning Engineers (ASHRAE) conferences held June 2003 and January 2004.

Description of Element 4 – Integrated Design of Small Commercial HVAC Systems:
The purpose of this element is to develop general guidelines for specifying and installing high-performance systems, document statewide savings potentials, and identify future code upgrade options. The project scope includes packaged HVAC systems up to 10 tons per unit—the most common HVAC systems for small commercial buildings in California. Through short-term monitoring and onsite surveys of current practice, the team will identify problems with equipment, controls, distribution systems, and operation and maintenance practices that lead to poor system performance.

Proposed Outcomes for Element 4:

1. Develop an understanding of common practices with equipment and controls (economizers, fan/thermostat, scheduling, etc.), distribution systems, and operation/maintenance practices that lead to poor system performance.
2. Increase energy efficiency and functionality of small commercial HVAC systems by 10 percent through both technical improvements to building design practices and widespread adoption of the improvements identified in the project.
3. Identify future code upgrade options.

Actual Outcomes from Element 4:
The Small HVAC System Design Guide (publication number: P500-03-082-A12) is complete with major findings including:

1. California market analysis: 1) Single package direct expansion (DX) air conditioners are the most popular HVAC system type in new construction in the State, cooling about 44% of the total floor space. 2) The most popular packaged DX system size is 5 tons, with units between 1 and 10 tons totaling about 90% of the total unit sales in new buildings. 4) Units 10 tons and smaller represent about 58% of the total packaged DX cooling capacity in the State.
2. System performance problems are widespread, impacting building electrical energy performance by an estimated 8% and building natural gas energy performance by an estimated 30%. Based on field studies of 215 HVAC units at 75 sites researches found economizers not operating properly (64% of units), improper refrigerant charge (46%), fans running during unoccupied periods (30%), fan that cycle on and off with a call for heating and cooling rather than providing continuous ventilation air (38%), low air flow (39%), no outside air (8%), actual fan power 20% greater than Title 24, and simultaneous heating and cooling (8%).
3. Numerous opportunities exist for improving efficiency, including improved economizer designs using thermostatic expansion devices, improved air-side efficiency on-board fault detection and diagnostic systems and the use of thermostats appropriate for commercial applications.
4. Reduction in system size on the order of 40% and reduction in annual energy costs on the order of 25% to 30% are possible with simple integrated design strategies.
5. Key actions designers can take to improve the performance of small HVAC systems include:
   - Practice load avoidance strategies such as reduced lighting power, high-performance glass and skylights, cool roofs, and improved roof insulation techniques in the overall building design.
   - Size units appropriately using ASHRAE approved methods that account for the load avoidance strategies implemented in the design, and use reasonable assumptions on plug load power and ventilation air quantities when sizing equipment.

- Select unit size and air flow based on calculated sensible loads without oversizing. Consider increasing unit flow rate to improve sensible capacity in dry climates.
- Specify units that meet CEE Tier 2 efficiency standards and incorporate premium efficiency fan motors, thermostatic expansion valves and factory-installed and run-tested economizers.
- Design distribution systems with lower velocities to reduce pressure drop and noise. Seal and insulate duct systems located outside the building thermal envelope.
- Operate ventilation systems continuously to provide adequate ventilation air. Incorporate demand-controlled ventilation to reduce heating and cooling loads.
- Specify commercial-grade thermostats with the capability to schedule fan operation and heating and cooling setpoints independently.
- Commission the systems prior to occupancy through a combination of checklists and functional testing of equipment control, economizer operation, air flow rate, and fan power.
- Develop clear expectations about the services provided by HVAC maintenance personnel.

6. The project team presented preliminary results at two conferences and published results in a series of four HPAC Engineering articles. The research team also applied preliminary results to the Title 24 2005 Standards in two ways:
   - Field findings helped to document problems that will be addressed through the Nonresidential Acceptance Requirements proposal.
   - Modeling and analysis supported the Nonresidential Duct Sealing and Insulation proposal through PG&E's CASE initiative.

Description of Element 4 – Integrated Design of Commercial Building Ceiling Systems:
The purpose of this element is to develop a prototype integrated ceiling design system with skylights, light wells, photocontrols, electric lighting and air distribution components. To support this effort the team is:

- Conducting new tests for horizontal skylight thermal and light transmission properties, which is expected to lay the groundwork for long-delayed test standards for skylight/light-well combinations.
- Conducting a field study to assess the persistence and effectiveness of insulation installed on top of dropped ceilings.

Proposed Outcomes for Element 5:

1. Develop an advanced ceiling system that offers superior energy performance and lighting quality while incorporating an extremely efficient lighting system, which includes skylights and photocontrols.
2. Create design guidelines ready for dissemination through the market transformation programs to designers and building owners.
3. Perform an analysis to show whether Title 24 might reasonably consider toplighting as part of baseline construction practice.
4. Develop skylight test protocols for U factor, visible light transmittance, and solar heat gain coefficient and skylight photometry.

Actual Outcomes from Element 5:

1. Design Guidelines for Skylights with Suspended Ceilings (publication number: P500-03-082-A13) is complete with major findings including:
   - Designers can use the Design Guidelines to create a custom skylight/light-well system for their projects. In addition, the Design Guidelines' valuable coordination and integration information will help facilitate the designers work with other construction professionals. For the manufacturer, the Design Guidelines communicate system design, component requirements, code and performance metrics, and market information about modular skylight systems and the market benefits of providing such a product.

- Splayed light wells allow skylights to be spaced further apart, thereby reducing installation costs and minimizing risks associated with roof penetrations.
- Modular light wells are desirable due to cost and performance predictability and better finish appearance.
- Light wells substantially reduce the solar heat gain through the bottom of the light well, but a substantial fraction of heat goes sideways through the light well.
- There is a market interest and demand for modular skylight products and design recommendations.

2. Lay-in Insulation: T-bar ceilings are ineffective as a pressure or infiltration barrier in a building. Completed analysis was used in Title 24 2005 Standards process to justify eliminating lay-in insulation as an option for dropped ceilings.
3. Skylight Testing: 1) Research results confirmed the benefit of light wells and insulation on light wells for reducing solar heat gain through the skylight system. 2) The effective visible transmittance (EVT) of projecting (dome) skylights stays nearly constant over a range of solar angles, whereas the EVT of flat-glass skylights rapidly drops off as solar elevation decreases. 3) National Fenestration Rating Council (NFRC) test methods for U-factor need to be updated for projecting skylights. 4) The NFRC method of rating the transmittance of tubular skylights overestimates the transmittance of these devices for most of the year and creates an uneven playing field between tubular skylights and projecting unit skylights. 5) Photometric data can be produced for skylight systems.
4. Market connections: 1) Several lighting software developers are investigating adoption of the photometry data. 2) The research team used the photometry results to establish in the Title 24 2005 Standards a definition of the daylit zone and skylight spacing criterion.

Description of Element 6 – Integrated Design of Residential Ducting & Air Flow Systems:
The purpose of this element is to reduce energy losses from residential HVAC duct systems. The project team will develop detailed descriptions of at least three approaches to building houses with HVAC ducts in the conditioned space (unventilated conditioned attic, dropped ceiling, or a conditioned mechanical room in the attic). The descriptions will focus on the construction techniques and details that production builders will need to incorporate to successfully utilize each approach. Specific details needed for typical single floor, two story and townhouse homes will be developed.

Proposed Outcomes for Element 6:

1. Develop guidelines for installing ducts within the conditioned space of three housing types.
2. Document energy savings potential from putting ducts in conditioned spaces.

Actual Outcomes from Element 6:
Several project reports are available (www.energy.ca.gov/pier/buildings/projects/400-99-013-1.html), with major findings including:

1. Building houses with ducts in conditioned space is technically feasible and can be done at fairly small cost increments with valuable returns in energy savings and delivered comfort.
2. Three approaches are recommended for constructing California houses with ducts located in conditioned space: 1) A "Dropped Ceiling" within portions of the house to contain the ductwork. 2) A "Cathedralized Attic" design that moves the insulation to the roof plane and removes attic venting, creating a semi-conditioned space above the ceiling. 3) The Plenum Truss approach, which uses a modified scissors truss to create space for the ducts between the ceiling and the bottom chord of the truss that is then inside the conditioned space.
3. Cost impact to the builder is 0% to 3% of construction costs. Of the three recommended approaches, the Dropped Ceiling and Cathedralized Attic designs will result in the lowest construction cost increase, ranging from zero to 1% respectively. The Plenum Truss approach is estimated to add between 1.5% and 3% to construction costs. In addition, the three approaches

may, in some cases, allow the heating and cooling equipment to be downsized, which could offset some of the construction cost increases or even result in an overall decrease in construction costs.

4. Significant energy savings and energy-cost savings can be achieved by building houses with ducts in conditioned space. The approach used—Cathedralized Attic, Dropped Ceiling, or Plenum Truss—has less of an impact on savings than does the house size or the climate.

Description of Element 7 – Outdoor Lighting Baseline Assessment:
The purpose of this element is to conduct a baseline survey of current outdoor lighting technologies and their usage in buildings, parking areas, walkways and signage (not including roadway lighting) in California and to develop recommendations for improving outdoor lighting system energy efficiency. The goals of this element are to estimate the amount of energy currently used by outdoor lighting in California and evaluate its environmental impacts.

Proposed Outcomes for Element 7:

1. Develop a baseline of outdoor lighting energy usage and key environmental factors that can be used to measure the impact of any code revisions.
2. Identify potential improvements in California's Title 24 building standards or Title 20 appliance standards or the design of new utility energy conservation programs.

Actual Outcomes from Element 7:
The California Outdoor Lighting Baseline Assessment report (publication number: P500-03-082-A18) is complete with major findings including:

1. Statewide commercial and industrial outdoor lighting annual energy consumption is estimated to be 3,067 GWh (roughly 3% of the total statewide nighttime annual energy consumption).
2. Statewide commercial and industrial outdoor lighting annual energy consumption is estimated to be 809 MW (roughly 3% of the peak nighttime load).
3. Energy savings potential from replacing all California high pressure sodium (HPS) lamps with metal halide (MH) lamps would save approximately 204 GWh annually.

The project results were used in justifying portions of the outdoor lighting component in the proposed Title 24 2005 standards.

Investigation of Secondary Loop Supermarket Refrigeration Systems

Contract #: 500-98-039
Contractor: Southern California Edison
Subcontractors: Foster-Miller
Contract Amount: $300,000
Match Amount: $150,000
Contractor Project Manager: Ramin Faramarzi (626) 633-7168
Commission Contract Manager: Chris Scruton (916) 653-0948
Status: Completed

Project Description:
The purpose of this project was to investigate an advanced secondary loop refrigeration system for supermarkets. The system circulates a refrigerated brine solution from a chiller to refrigerated display cases. The project identified system improvements such as variable-speed pumping, evaporative condensing, and low-head pressure operation that reduce energy consumption. Secondary loop refrigeration systems can significantly reduce the refrigerant charge in supermarkets, which promotes substantial environmental benefits by protecting the ozone layer and inhibiting global warming caused by loss of refrigerant from the notoriously leaky systems.

This project supports the PIER Program objectives of:

- Improving environmental and public health costs/risk of California's electricity by demonstrating an alternative refrigeration system which uses less ozone-depleting refrigerant.
- Improving the energy cost/value of California's electricity by lowering electrical consumption of supermarket secondary loop refrigeration systems.

Proposed Outcomes:

1. Reduce energy consumption for refrigeration or freezing in supermarkets by approximately 13.9 percent compared with a typical multiplex system.
2. Achieve refrigerant losses at least 15 percent less than baseline system.
3. Reduce overall maintenance costs compared with baseline system.

Actual Outcomes:

1. Reduction in energy consumption for refrigeration or freezing in supermarkets by approximately 13.9 percent compared with a typical multiplex system. Reduction of nearly 5% in comparison with state-of-the-art multiplex systems.
2. Lifecycle refrigerant losses likely at least 15 percent less than baseline system, though this could not be ultimately evaluated in the timeframe of the project.
3. Overall reduction in maintenance costs compared with baseline system.

Project Status:
The refrigeration equipment display cases in a supermarket in Valencia were instrumented to measure baseline performance. A second store in Thousand Oaks with the advanced secondary loop system was also instrumented, and the performance and energy consumption of each system were monitored and compared. Monitoring and analysis proceeded through 2003. A final report was delivered in early 2004.
Final Report Title: Investigation of Secondary Loop Supermarket Refrigeration Systems
Publication Number: 500-04-013
Publication Date: March 2004
PIER Web Location: www.energy.ca.gov/pier/buildings/projects/500-98-039-0.html

Lighting Research Center Partners Program Membership

Contract #: 500-01-011
Contractor: Rensselaer Polytechnic Institute
Contract Amount: $150,000
Contractor Project Manager: Jennifer Brons (518) 687-7136
Commission Contract Manager: Steve Williams (916) 654-4050
Status: Completed

Project Description:
Membership in the Lighting Research Center (LRC) from 2002 through 2004 allows the California Energy Commission (Commission) to leverage public benefit research expenditures for maximum benefit by combining Commission funding with other members' funding. This Commission funding will support specific research as well as developing and implementing public interest RD&D policies and programs that encourage well-functioning energy markets through advancements in science and pre-competitive technologies that promise to enhance California's economy and/or environment.

This project supports to the PIER program objectives of:

- Improving the reliability/quality of California's electricity system during peak load times by helping reduce lighting loads.
- Improving environmental and public health cost/risks of California's electricity by reducing harmful nitrogen oxides (NO_x) emissions and carbon dioxide (CO_2) emissions resulting from electricity generation.

Proposed Outcomes:
As a result of membership participation in LRC, the California Energy Commission realizes the following direct benefits:

1. Priority response and advice on technical issues to Commission staff.
2. Access to a special restricted area of the LRC's web site that posts research and market information only available to members.
3. Complimentary advance copies of publications, reports and papers resulting from LRC research activities.
4. Commission staff invitations to LRC conferences, seminars and workshops.
5. Priority consideration to the Commission's request for research to be conducted in a specific area or direction within the scope of the LRC's research program that would be beneficial to the State.
6. Annual project updates and status reports.
7. Privileges to obtain information through bibliographic and database searches, and the use of LRC's Lighting Library, which includes a complete set of LRC faculty and staff publications.
8. A 33 percent discount on LRC publications for future projects the Commission may choose to invest in with LRC.
9. A 15 percent discount on research projects and help with finding facilities and co-funding for future projects the Commission may choose to invest in with LRC.
10. A 20 percent discount on any programs offered through LRC Outreach Education Program projects the Commission may choose to invest in with LRC.

11. Commission staff participation in the annual LRC Partners meeting on Rensselaer's campus, providing opportunities to:
    - Meet and network with public and private sector leaders who have a national reputation in lighting.
    - Discuss LRC research and development achievements.
    - Provide input and direction for future research activities.

In addition to the benefits that accrue directly to the Commission from this agreement, the following benefits will be made available from LRC to all entities that implement California's public goods lighting programs. Requests from public goods administrators for these benefits will be directed through the Commission to the LRC.

1. Access to a special restricted area of the LRC's web site that posts research and market information only available to members.
2. Complimentary advance copies of non-proprietary publications, reports and papers resulting from LRC research activities.
3. Product testing and consulting services at cost.
4. Privileges to obtain information and copies of faculty and staff publications through Bibliographic and database searches using the LRC Librarian, and the LRC's Partner-only web site, one set of NLPIP and DELTA publications, and LRC published books. Additional copies of publications may be purchased at the 33 percent Partner discount.
5. A 33 percent discount on LRC publications for future projects the Commission may choose to invest in with LRC.
6. A 15 percent discount on non-proprietary research projects and help with finding facilities and co-funding for future projects the Commission may choose to invest in with LRC.
7. A 20 percent discount on any programs offered through LRC Outreach Education Program projects the Commission may choose to invest in with LRC.

Actual Outcomes:
LRC assisted Commission staff with various technical investigations on approximately 45 occasions from 2003-2004. LRC staff visited the Commission five times during this period, holding four technical updates on LRC research projects. Commission staff attended LRC's Partner's Day in 2002 and 2004. In addition, the Commission and LRC developed collaborations on a number of other research efforts funded through other contracts including the Lighting Research Program, Daylight Dividends Program, and National Lighting Product Information Program. LRC resources are available at:

⇒ www.lrc.rpi.edu.

Project Status:
This contract is completed. The Commission is currently in the process of funding continued Partner's Program participation for 2005-2007.

Removing the Key Technical Barrier to the Widespread Use of Advanced Absorption Cooling

Contract #: 500-98-029
Contractor: Gas Technology Institute
Subcontractors: Stanford Research Institute : Broad USA
Contract Amount: $690,178
Match Amount: $235,000
Contractor Project Manager: Kevin Krist (847) 768-0793
Commission Contract Manager: Chris Scruton (916) 653-0948
Status: Completed

Project Description:
The purpose of this project is to improve the efficiency and lower the cost of natural gas-fired absorption chillers. This project will study and support development of new corrosion resistant materials using a fluidized-bed furnace diffusion process. The new materials are expected to enable higher temperatures and efficiencies in an advanced absorption chiller, which will be tested and demonstrated as part of the project.

This project supports the PIER Program objectives of:

- Improving the reliability/quality of California's electricity by reducing the demand on the electrical system during summer peak hours.
- Improving the environmental and public health costs/risks of California's electricity by using an absorption cycle that does not use CFCs (chlorofluorocarbons) or any other material with ozone depletion, global warming, or health hazard potential.

Proposed Outcomes:

1. A direct fired gas absorption chiller with the following features:
    - Coefficient of Performance (COP) of at least 1.6.
    - Temperature limits of at least 285 degrees C (545 degrees F).
    - Thermal conductivity of coated materials equal or better than base material.
    - Materials lifetime at least 20 years.
    - Corrosion rate of less than 01 mpy.
    - Coating cost of less than $10/ft2 for generators and less than $3/ft2 for absorber heat exchangers.

Actual Outcomes:

1. Intermediate products meeting the required specifications were produced, but not in the exact size and quantities required to build a chiller.

Project Status:
The original process was developed and validated using sub-scale samples at Stanford Research Institute in Menlo Park. Quality Heat Treatment (QHT) of Australia, a leader in fluidized bed technology, worked to scale up the technology to enable full size tube production. This was found to be more difficult than anticipated because of differences between reactor materials and heating methods. QHT did very nearly produce tubes within specification, but ultimately decided to terminate the project due to financial constraints. Broad, the world's highest volume maker of absorption chillers, was ready to test the tubes in a triple-effect generator at their facility in China. The coating technology may eventually be used in other corrosion prone applications, such as condensing gas furnaces.
Final Report Title: Removing the Key Technical Barrier to the Widespread Use of Advanced Absorption Cooling
Publication Number: 500-04-019
Publication Date: February 2004

PIER Web Location: www.energy.ca.gov/pier/buildings/projects/500-98-029-0.htm

BLDGS Projects Completed in 2003

Advanced Duct Sealant Testing

Contract #: 500-01-002
Contractor: Lawrence Berkeley National Laboratory
Contract Amount: $260,000
Contractor Project Manager: Max Sherman (510) 486-4022
Commission Contract Manager: Philip Spartz (916) 654-4592
Status: Completed

Project Description:
The purpose of this project is to conduct laboratory testing and field research on duct sealing products. This research will ultimately lead to and support an American Society for Testing Materials (ASTM) standard for performance testing of the durability of duct sealants. Once a national testing standard is in place, California's Title 24 codes can be updated to refer to this performance standard. A more immediate use of this work will be to test new, advanced duct sealant products being introduced into the California home building market. This work will confirm whether or not these products meet the recently revised Title 24 code requirements for duct sealing, and, from a research perspective, the work will improve future products by understanding how current duct sealing methods fail over time.

This project supports the PIER Program objectives of:

- Improving energy cost/value of California's electricity by improving the efficiency of HVAC distribution systems, thereby reducing energy costs to homeowners.
- Improving electricity reliability/quality/sufficiency of California's electrical system by reducing the peak demand within the residential sector, especially in new homes that are being built predominantly in hot inland climates.

Proposed Outcomes:

1. Enable the Commission to implement results of duct sealant longevity tests into the latest Residential Building Energy Efficiency Standards, after testing existing UL 181B-FX rated tape products using a revised method.
2. Understand what UL 181B-FX high temperature (baking) test results mean for use in California HVAC duct applications.
3. Understand what new duct sealant product behavior test results mean for use in California HVAC duct applications.
4. Develop a standardized test method for evaluating duct sealant durability (under the auspices of the American Society for Testing and Materials (ASTM)).
5. Future versions of California's Building Energy Efficiency Standards will be able to reference an ASTM standard for duct sealant longevity for all duct-sealing products used in California buildings.
6. Other public energy efficiency programs, as well as private duct sealing practitioners, will be able to use the ASTM standard and the results of the product testing to successfully plan and implement duct sealing in California buildings.

Actual Outcomes:

1. Lawrence Berkeley National Laboratory (LBNL) researchers conducted a duct sealant longevity test at constant pressure and temperature (194°F) starting in January, 2002. The five tapes tested had not failed after 16 of a total of 24 months of testing in the core-to-collar application. If the tapes do not fail after 24 months are complete, they may be considered suitable for this application.
2. None of the five tapes tested are acceptable for collar-to-plenum connections and the Title 24 Standards should not allow this application.
3. One of the five tapes tested using the UL 181B-FX high temperature (baking) test was acceptable - the new duct sealant, a foil-butyl adhesive product.

4. Because of failures observed during this series of testing, only metal clamps should be allowed for use in duct core-to-collar connections until more non-metallic clamps are evaluated.
5. An ASTM draft standard was developed to standardize test procedures and increase reliability of testing. This standard, ASTM E2342-03, was approved in December, 2003.
6. In order to complete the 24 months of testing, research begun under this contract will be completed under a separate work authorization. Commission staff will then incorporate the results of the duct sealant longevity tests into their implementation strategies for the latest Title 24 Residential Building Energy Efficiency Standards.
7. Future versions of California's Title 24 Building Energy Efficiency Standards and other energy efficiency programs will be able to reference the ASTM standard for duct sealant longevity of duct-sealing products used in California buildings.

Project Status:
The project has been completed.

ARTI Membership

Contract #: 400-99-020
Contractor: Air Conditioning & Refrigeration Technology Institute
Contract Amount: $300,000
Contractor Project Manager: Mark Menzer (703) 525-8800
Commission Contract Manager: Don Aumann (916) 654-4588
Status: Completed

Project Description:
Membership in the Air Conditioning & Refrigeration Technology Institute (ARTI) allows the California Energy Commission (Commission) to leverage public benefit research dollar expenditures for maximum benefit by combining Commission funding with other members' funding. The Commission's funding supports specific research as well as developing and implementing public interest RD&D policies and programs that encourage well-functioning energy markets through advancements in science and pre-competitive technology that promise to enhance California's economy and/or environment.

The targeted subcommittees (focus areas) selected by Commission staff for research and development funding are:

- Equipment Energy Efficiency
- System Integration
- Indoor Environmental Quality

As a result of membership participation in ARTI, the California Energy Commission realizes the following benefits:

- Participate, as a voting member of the ARTI 21-CR Steering Committee and, as a voting member, may be involved in all tasks of the Committee. The Steering Committee directs the overall effort, establishes procedures, assigns priorities and approves projects for support. The Commission may target up to 50 percent of Commission-provided funding for those specific research projects that the Commission determines to have the greatest potential for reducing energy consumption.
- Participate in the 21-CR subcommittee meetings, as agreed with the subcommittee chairs, and receive minutes of subcommittee meetings as requested. The subcommittees identify and prioritize research needs and provide recommendations to the Steering Committee. In addition, the subcommittees will make contractor selections and monitor research progress.
- Receive quarterly reports and all items sent to the Steering Committee. These items may include status reports of ongoing research projects, notices of planned site visits to contractor meetings, and draft research reports.
- Access to all research deliverables prior to public release and on-line communication services via the ARTI web site. These deliverables may include reports, analytical tools, databases and other products developed in the research projects.

This project supports the PIER Program objectives of:

- Improving the reliability/quality of California's electricity system during peak load times by helping to improve air conditioning system efficiency.
- Improving environmental and public health cost/risks of California's electricity by reducing harmful NO_x emissions and CO_2 emissions resulting from electricity generation.
- Maximizing California's market/economy connection because approximately 12 percent of all air conditioners manufactured by ARTI members are shipped to California. California is the biggest market for air conditioners in the country, and improvements in the technology will directly benefit California's electric customers.

Actual Outcomes:

At the end of the Commission's funding support the 21-CR program completed the following 12 research projects co-funded by the Commission:

1. The Efficiency Limits of Water Vapor Compressors Suitable for Air-Conditioning Applications (Project 605-10010).
2. Microchannel Heat Exchangers with Carbon Dioxide (Project 605-10020).
3. Evaluating the Performance of Thermoacoustic Cooling (Project 610-10040).
4. Evaluating the Ability of Unitary Equipment to Maintain Adequate Space Humidity Levels (Project 605-20010).
5. High Performance Heat Exchangers for Air Conditioning and Refrigeration Applications (Project 605-20020).
6. State-of-the-Art Review, Whole Buildings and Building Envelope Simulation and Design Tools (Project 605-30010).
7. State-of-the-Art Review, HVAC Component and System Simulation and Design Tools (Project 605-30020).
8. Energy Savings Potential of Flexible and Adaptive HVAC Distribution Systems for Office Buildings - Phase I (Project 605-30030).
9. Defining the Effectiveness of UV Lamps Installed in Circulating Air Ductwork (Project 610-40030).
10. Investigation of Building Exhaust Air Re-Entrainment Into Outdoor Air Intakes of Packaged Outdoor HVAC Equipment - Phase I (Project 610-40040).
11. Assessment of the Commercial Implications of ASHRAE A3 Flammable Refrigerants Used in Air Conditioning and Refrigeration Systems (Project 610-50025).
12. Study of the Effects of Water in Synthetic Lubricant Systems and Clathrate Formation (Project 610-50035).

See the project web site (http://www.arti-21cr.org/) for more information specific to each of these projects or to download the final reports.

Project Status:
The Commission's membership ended at the end of 2002 and was not renewed.

Center for the Built Environment (CBE) Membership

Contract #: 500-01-001
Contractor: Regents - Berkeley
Subcontractors: Armstrong World Industries : Arup : California Department of General Services : EHDD Architecture : HOK : Keen Engineering : NBBJ : Pacific Gas and Electric Company/Pacific Energy Center : Skidmore, Owings & Merrill : Tate Access Floors, Inc. : Taylor Engineering Team : The Trane Company : United States Department of Energy : United States General Services Administration : United Technologies Corporation : Webcor Builders Team : York International Corporation
Contract Amount: $52,500
Contractor Project Manager: Karen Roy (510) 643-8898
Commission Contract Manager: Philip Spartz (916) 654-4592
Status: Completed

Project Description:
California Energy Commission membership (from 10/02/01 to 06/30/03) in the university/industry/government research collaborative known as the Center for the Built Environment (CBE) enabled public funds to be leveraged for greater benefit to the citizens of the state. This collaborative, based on the University of California, Berkeley campus, performs research in the areas of energy efficiency in buildings, comfort for building occupants, indoor air quality, and productivity-conducive building environments. CBE generates beneficial building and human response data for dissemination to architects, designers, mechanical and building engineers, government agencies, and other entities that create indoor environments through a variety of research projects.

This project supports the PIER Program Objectives of:

- Improving energy cost/value of California's electricity by encouraging energy efficiency in the heating, cooling ventilation and lighting of buildings.
- Improving the environmental, public health and safety aspects of California's electrical supply by reducing pollution associated with electricity generation through encouraging the efficient use of energy in buildings and providing more comfortable and healthier indoor environments by improving indoor air quality.

Proposed Outcomes:
As a result of membership in CBE, the California Energy Commission benefits through:

1. Attendance at semi-annual Industry Advisory Board meetings, providing opportunities to help direct current and future research that may impact California buildings and further energy efficiency.
2. Direct connection with private industry and government leaders who are interested in promoting more efficient building technologies.
3. Semi-annual project updates and copies of papers written by CBE researchers.
4. Prioritized response and technical advice from CBE experts in areas such as underfloor air distribution, operable windows and ventilation impacts on productivity.
5. Access to the members-only section of CBE's website, which contains most recent papers and other information not available to the public until after a certain time period passes.

Membership in CBE allows the Commission to leverage public-benefit research dollar expenditures for maximum benefit by combining Commission funding with funding provided by other industry and government members (called partners). The Commission's funding supports specific research as well as developing and implementing public interest R&D policies and programs that encourage well-functioning energy markets through advancements in science and pre-competitive technology that promise to enhance California's economy and/or environment.

Actual Outcomes:
Six of CBE's sixteen projects during this period dealt with a heating, ventilating and air conditioning strategy known as underfloor air distribution (UFAD). This strategy may result in improving both energy

and facility management efficiencies for commercial buildings. The research projects were titled UFAD Case Studies, UFAD Cost Analysis, UFAD Capitol East End Block 225, UFAD ASHRAE Design Guide, UFAD Plenums and UFAD Stratification. Due to these various efforts, CBE has become an 'expert center' nationally for those involved in underfloor air distribution. California also has more buildings using UFAD than any other state. This membership in CBE revealed the need building engineers have for further development work in designing UFAD systems and precipitated PIER contract #500-01-035, Modeling for Under Floor Air Distribution.

Other CBE research during this membership period included projects on High Performance Facades, Mixed Mode Buildings, Occupant Feedback, Operable Windows, Satisfaction Survey, Speech Privacy, Team Space, Thermal Comfort Model, Ventilation/Productivity and Wireless Sensing.

Some specific results from these projects include: development of an underfloor air system design guide (now published by ASHRAE), presentation of numerous technology transfer seminars on UFAD, some web-enabled survey tools available to CBE members and the building industry at large (Occupant Indoor Environmental Quality (IEQ) Survey Operation and Maintenance (OM) Survey see more at http://www.cbe.berkeley.edu/RESEARCH/briefs-survey.htm and development of wireless sensing and control technologies for commercial building applications.

CBE's website (http://www.cbe.berkeley.edu/) gives detailed project information and many papers online. Industry Advisory Board (member) meetings were held at UC Berkeley on Oct. 18-19, 2001, Apr. 18-19, 2002, Oct. 17-18, 2002 and Apr. 24-25, 2003.

Project Status:
The project has been completed.

Commercial Buildings Cool Roofs Monitoring

Contract #: 400-00-039
Contractor: Lawrence Berkeley National Laboratory
Subcontractors: Davis Energy Group, Inc.
Contract Amount: $305,000
Contractor Project Manager: Richard Wilson (510) 486-7391
Commission Contract Manager: Philip Spartz (916) 654-4592
Status: Completed

Project Description:
The purpose of this project is to determine the savings associated with commercial cool roof systems by monitoring the actual performance of a carefully selected assortment of buildings participating in the Commission's AB970 Peak Load Reduction, Cool Communities (Cool Roof Retrofit) Program. The selected buildings must be scheduled for re-roofing and meet the criteria for project data collection purposes. Monitoring buildings is necessary to produce data that will help researchers better understand the peak savings resulting from the application of a cool roof.

This project supports the PIER Program objectives of:

- Improving energy cost/value of California's electricity by reducing peak demand plus the associated higher costs of supplying/purchasing energy during constrained periods.
- Improving the reliability/quality/sufficiency of California's electrical system by reducing peak demand.

Proposed Outcomes:

1. Increased knowledge of the peak and energy savings achievable with cool roof applications.
2. Improved building energy simulation capabilities in the area of roof heat transfer.

Actual Outcomes:

- Difficulty in finding appropriate representative candidates for cool roof retrofitting was encountered, and this delayed project progress. Building selection was based on the following criteria: single-story building, roof area between 9,000-200,000 $ft^2$2, no roof insulation to be added during re-roof and air conditioning used between June–September. After interviewing over 100 potential participants, seven commercial buildings were recruited for base-case comparison monitoring prior to re-roofing. These buildings were: a Sacramento retail building, a San Diego elementary school building, a Fresno-area fruit-packing complex (industrial, warehouse, and cold-storage buildings - equivalent to four structures) and an Irvine office building. The last building was never re-roofed, however, so data on only six of the commercial buildings could be monitored after retrofitting.
- Using the difference of average outdoor and indoor temperatures, preliminary results for the retail store building in Sacramento show estimated energy savings at approximately 50%. The school building in Richland was more difficult to estimate due to scheduling and operation issues, but initial savings were estimated at around 15% - estimates of energy savings and peak demand reduction. The cold storage facility operation in Reedley (near Fresno) is highly seasonal and re-roofing didn't occur until late in their season, so more data was collected in the following season to clarify the situation at this site with four different types of buildings. Preliminary results at this facility are estimated in the area of 20%.
- Building energy simulation capabilities to predict roof heat transfer from the data collected in this project for use in projecting energy savings in other California building are also part of the separate work authorization.
- The expected research could not be completed within the term of this contract due to difficulties in locating appropriate building sites. After discussions with the contractor and after considering the uncertainties associated with the project timeline, staff chose not to initiate a no-cost time

extension to this contract. The uncompleted analyses will be completed under a separate work authorization.

Project Status:
The project has been completed.

Cooling Solutions

Contract #: 500-00-022 **Project #:** 6
Contractor: Gas Technology Institute
Project Amount: $100,000
Match Amount: $900,000
Contractor Project Manager: Kevin Trim (847) 768-0976
Commission Contract Manager: Chris Scruton (916) 653-0948
Status: Completed

Project Description:
The purpose of this project is to promote the use of gas cooling technologies. Gas cooling can provide an alternative to increased peak demand for electricity for commercial cooling, particularly in the high-growth areas of California's hot, dry valleys. Applicable technologies are both absorption cooling and gas-engine-based vapor compression cycles. The use of heat which would ordinarily be wasted is another potential application of absorption cooling. However, the initial costs must be driven down by RD&D and demonstrations conducted to allow commercial building architects, builders, engineers, and other decision makers the opportunity to see advanced gas cooling equipment "in action."

This project supports the PIER Program objectives of:

- Improving the reliability and quality of California's electrical supply by reducing summer peak demand.
- Improving energy cost by encouraging the use of natural gas during the summer when gas prices are lower, and improving the value of energy by providing cooling from waste heat sources.
- Providing greater choices for California consumers by providing new options in air conditioning technology.

Proposed Outcomes:

1. Perception barriers related to Buildings Combined Heat and Power (BCHP) will be reduced.
2. Decision makers will become informed through a BCHP economic study and computerized BCHP screening tool.
3. HVAC designers will be educated about gas cooling.
4. Members and customers will be informed about BCHP through an enhanced website.

Actual Outcomes:

1. The Gas Cooling and Desiccant Dehumidification Tutorial website update was completed and submitted for linking to CEC website.
2. Demonstrations were conducted of direct-gas-fired 5-ton ammonia absorption chillers.
3. Stirling engine assessment began and will be continued in a future research project.
4. BCHP screening tool was completed.
5. Commercial and healthcare gas cooling marketing study was conducted. The study found that there was significant potential for gas cooling and dehumidification in commercial markets, but that gas price volatility, the high price of absorption cooling equipment, and in ammonia absorbers, toxicity of ammonia are barriers to absorption cooling.

Project Status:
The project has been completed.

Energy Efficient Downlights for California Kitchens

Contract #: 500-98-020
Contractor: Lawrence Berkeley National Laboratory
Contract Amount: $648,603
Match Amount: $320,028
Contractor Project Manager: Michael Sminovitch (510) 486-5863
Commission Contract Manager: Don Aumann (916) 654-4588
Status: Completed

Project Description:
The purpose of this project is to research, develop and demonstrate a low-cost, energy-efficient compact fluorescent (CFL) downlight system designed specifically for residential kitchen applications. Kitchen lighting is the largest lighting energy user in Californian homes, accounting for one-quarter of residential lighting operating costs. Therefore, residential kitchen environments have a large energy savings potential, particularly in new construction.

Successful completion of this project is expected to result in overall lower initial costs for CFLs for kitchen lighting, making them more attractive to homeowners. Savings occur from reduced installation and call-back costs to the installers as well as lower equipment costs. In addition, a 15-25 percent increase in light output will further increase the attractiveness of CFL downlights used to illuminate kitchens, where brighter than average light is typically required for food preparation.

This project supports the PIER Program objective of:

- Improving the energy cost/value of California's electricity by overcoming technical and market issues such as lighting quality, the inability to dim and the high initial costs for CFLs that have provided barriers to the widespread use of CFLs in the residential sector.

Proposed Outcomes:

1. Use of modular electronic ballasts that control multiple CFL downlights, reducing the number of ballasts required for a typical kitchen layout of 4-6 fixtures by 75-80 percent. This new system will provide high-quality, high-performance, energy-efficient lighting with a significant decrease in initial costs over current CFL downlights.
2. Use of injection molding and other plastic molding processes to generate the complicated, optically efficient geometries that will increase efficiency by about 15-25 percent over existing CFL reflectors, which have about 50-70 percent efficiency.

Actual Outcomes:

1. Developed fixtures with a final efficacy of 50 lumens per watt.
2. Reduced fixture costs by over 50%. Comparable high performance commercial grade CFL downlights cost $150-200, while the initial target price for the kitchen lighting system (KLS) is only $50-70.
3. Found that a fully dimmable downlight system was not applicable for this project because:
   - Dimming is rarely used in kitchens common in high-production housing.
   - Adding dimming capability could as much as double the final product cost of the system.
   - The added cost of dimming was unacceptable to production homebuilders.

4. Key features of the system include:
   - *Thermally enhanced ballast configuration.* The KLS ballast has been thermally optimized by connecting it to the main metallic housing for the downlight pan itself.
   - *Master-slave ballast geometry.* This approach greatly reduces material and installation costs.
   - *Plug-and-play wire connections*. This flexible and removable connection significantly simplifies the wiring to the slave fixture.
   - *Institutionally transparent/builder-friendly*. The installation of the KLS follows the same process that builders are familiar with.
   - *High performance optics*. The reflector optics for the KLS are based on existing commercial grade CFL products that maximize output while minimizing glare.
   - *High quality CFL*. The CFLs included with the KLS are 26W high quality, high output lamps.
   - *High quality ballast*. The ballast chosen for the KLS is produced by Advance Transformer. This ballast is approved for residential applications (FCC Class B), and features a quick startup characteristic.
5. Project partner, Lithonia, is expected to release a commercial product in late 2004.

Project Status:

- The project was completed in December 2003 and the final report will be posted on the Commission web site in early 2004.
- Sacramento Municipal Utility District (SMUD) is funding a field study of prototypes at 50 area homes. This project began in late 2003.
- PIER Buildings Program is funding a follow-up project to develop a product variation optimized for retrofit applications (http://www.archenergy.com/lrp/advlight_luminaires/ project_4_3.htm).

High Performance Commercial Buildings Systems

Contract #: 400-99-012
Contractor: Lawrence Berkeley National Laboratory
Subcontractors: Texas A&M University : Massachusetts Institute of Technology : University of California, Office of the President : University of California, San Diego : University of California, Berkeley : Davis Energy Group, Inc.
Contract Amount: $5,995,385
Match Amount: $3,093,049
Contractor Project Manager: Richard Wilson (510) 486-7391
Commission Contract Manager: Martha Brook P.E. (916) 654-4086
Status: Completed

Program Description:
The purpose of the High Performance Commercial Building Systems Program is to develop and deploy a set of energy savings technologies, strategies, and techniques to help improve processes for designing, commissioning, and operating commercial buildings. The goal of this program is to reduce energy use in the California commercial sector by 22 percent by 2015. At the same time this program will strengthen the growing energy efficiency industry in California by providing new jobs and growth opportunities for companies providing the technology, systems, software, design, and building services to the commercial sector.

This program contains one administrative element and five linked technical program elements that collectively contain 14 projects with 41 distinct R&D tasks. Collectively they create a comprehensive Research, Development, and Demonstration (RD&D) program with the potential to capture large savings in the commercial building sector, providing significant economic benefits to building owners and health and performance benefits to occupants.

This programmatic contract supports the PIER Program objectives of:

- Improving the energy cost/value of California's electricity by helping customers optimize their building systems to perform at peak efficiency.
- Improve the reliability/quality of California's electricity by helping lower peak electrical demand from California's commercial building sector.

A public website (http://buildings.lbl.gov/hpcbs) has been established for this research program.

Description of Element 1 – Program Administration:
This administrative element encompasses overall coordination and integration of the five technical program elements for the High Performance Commercial Building Systems program. With five subcontractors, fourteen match contributors and staff from as many organizations participating in this program, only effective management will achieve the program and project goals within allocated budget and schedule.

Actual Outcomes from Element 1:

1. Research products delivered on time and within budget.
2. Public website that communicates project results.
3. Presentations, articles and papers conveying the results of the research, provided to the buildings community.
4. The final program report, including twenty-two technical attachments, is posted on the PIER web site at: www.energy.ca.gov/pier/reports/500-03-097f.html#ExecutiveSummary

Description of Element 2 – Life-Cycle Tools:
The purpose of this element is to develop integrated information management technologies to assist in improving commercial building performance. This element is divided into three projects: Performance Metrics and Benchmarking, Retrofit Tools, and Interoperability. The three specific problems addressed in this element are related to:

- Lack of standard performance metrics and benchmarking tools and techniques.
- Lack of standard methods for retrofit performance analysis.
- Lack of standard methods for exchanging data among software programs.

Proposed Outcomes for Element 2:

1. An operational web-based benchmarking tool for commercial buildings. This tool will allow facility managers and building owners to judge their building's energy performance, compared to industry norms.
2. A building energy performance metrics tracking tool for commercial buildings. This tool will allow building operators and commissioning agents to archive, track and visualize key features of HVAC equipment operation.
3. High-speed metering proves to be an effective approach to evaluate commercial building energy performance. High-speed meter technology is commercialized in national energy communications markets.
4. A performance measurement tool for retrofit applications that will predict energy savings for potential energy efficiency measures. The tool will enable building operators and ESCOS to make informed retrofit recommendations to building owners.
5. Interoperable data schema for HVAC systems that will facilitate the exchange of HVAC system information between energy analysis tools and other building design tools. The interoperability of these building design tools will encourage architects and mechanical engineers to study the energy impacts of alternatives early in the building design process.

Actual Outcomes from Element 2:

1. The Cal-Arch tool is complete. It is a web-based benchmarking tool that incorporates California end-use data and is available on-line. It is available for public use and can be downloaded from http://poet.lbl.gov/cal-arch/.
2. Cal-Arch is regularly used at Pacific Gas & Electric's Pacific Energy Center in basic courses on energy in buildings, and can be used by energy managers, energy information system vendors, utilities, performance contractors, and researchers and analysts.
3. This benchmarking research led to enhancements and changes to the U.S. EPA-DOE Energy Star whole-building rating tool methodology, and influenced CEC and EPA policy regarding the use of benchmarking during the energy crisis in California.
4. A prototype tool was developed for defining and tracking performance metrics across the building life cycle. This "Metracker" prototype is available for download from http://buildings.lbl.gov/hpcbs/Element_2/Metracker/02_E2_Metracker.html.
5. Commercialization and collaboration discussions were initiated and continue with several potential partners who are interested in either using Metracker in demonstration pilot projects, or modifying Metracker for use in their existing and evolving software toolboxes.
6. A software tool that estimates the energy savings from commercial building retrofits (RESEM) was modernized, extended and validated for use in California. This new product, RESEM-CA, uses commercial building stock types and equipment, weather, utility rates, and preferred retrofit strategies that are specific to California. The results of the validation study confirm that RESEM-CA is a sufficiently accurate tool to be suitable for retrofit analysis.
7. The International Alliance on Interoperability's new building information model (IFC) was extended to include all critical HVAC components needed for seamless data exchange among software tools. This IFC2x2 data model was released worldwide to the public in May 2003.
8. The HVAC data model's potential use and benefits were demonstrated in a pilot exchange between a building energy simulation tool (EnergyPlus) and a duct design

tool (MagiCAD) in September 2002. The demonstration showed that IFC-based data exchange can facilitate energy savings and improve the quality of design, simulation and analysis.

Description of Element 3 – Lighting, Envelope and Daylighting:
The purpose of this element is to develop an integrated building equipment communications (IBECS) network that will allow appropriate automation of lighting and envelope systems to increase energy efficiency, improve building performance, and enhance occupant experience in the space. This network will provide a low-cost means for occupants to control local lighting and window systems, thereby improving occupant comfort, satisfaction and performance. A related goal of this program element is to improve existing lighting control components and accelerate development of new daylighting technologies that will allow daylighting to be more extensively applied to a larger proportion of building floor space. This element consists of three research projects: Lighting Controls, Daylighting, and Lighting Network Operations.

Proposed Outcomes for Element 3:

1. A building equipment communications network (IBECS) that allows automation of lighting and envelope systems. The IBECS will include interfaces with controllable ballasts, wall switches, occupant sensors, electrochromic windows, Venetian blinds, and BACnet-compliant building energy management systems.
2. Software that will operate on the IBECS network to support commissioning of building lighting systems.
3. Software that will operate on the IBECS network to support lighting and envelope system diagnostics.

Actual Outcomes from Element 3:

1. Key IBECS network components were developed, including working prototypes of a ballast network interface, IBECS-enabled wall switch, advanced sensor, and lighting panel meter.
2. Two ballast manufacturers have indicated they intend to add IBECS technology to their new ballasts. In addition, negotiations are underway with a manufacturer of digital lighting networking products to embed the IBECS ballast network interface in their network connector.
3. Working prototypes of key IBECS network components were developed, including control device interfaces for three window components: DC-motorized Venetian blinds or roller shades, AC-motorized blinds or shades, and electrochromic windows. Window brightness control and interior daylight levels were improved with dynamic window control.
4. A fully-configured IBECS network was developed and piloted in an office building.
5. The IBECS technology is compliant with IEEE standards. The IEEE 1451 Standard on Sensors and Actuators has adopted for its reference protocol the same digital communications protocol (1-Wire™ communications protocol from Dallas Semiconductor) used by the IBECS system.
6. A conceptual framework was developed that unifies not only IBECS and BACnet, but also the DALI protocol that is finding increased acceptance in the lighting industry.

Element 4, Low Energy Cooling:
Description: The purpose of this element is to identify and evaluate appropriate combinations of low-energy cooling technologies, including more efficient distribution systems, and to develop the simulation models required both for this evaluation and for the design of such systems for individual buildings. This research element is separated into three projects: Appraisal of System Configurations, Efficient Distribution Systems, and Tools and Guides.

Proposed Outcomes for Element 4:

1. Increased industry knowledge of the energy and peak demand savings potential of low energy cooling technologies in commercial buildings for distinct California climate regions.
2. Building energy simulation software effectively models both individual and combinations of low energy cooling technologies.
3. The benefits of efficient duct systems are accounted for in the Title-24 compliance procedures for non-residential buildings.

Actual Outcomes from Element 4:

1. The performance of six low energy cooling systems has been evaluated for use in all sixteen California climate zones. Highlights of this analysis are (1) evaporative pre-cooling is beneficial in all California climates, and (2) radiant slab cooling can significantly reduce peak demand by smoothing and shifting cooling loads.
2. An Alternative Calculation Method (ACM) change proposal was developed to include an overall metric for thermal distribution system efficiency in the reporting requirements for the 2005 Title 24 Standards. The new metric (HVAC Transport Efficiency) is the ratio between the energy expended to transport heating, cooling, and ventilation throughout a building and the total thermal energy delivered to the various conditioned zones in the building.
3. Analysis was completed that shows duct sealing should be cost effective for VAV systems in California large commercial buildings with 10% or more duct leakage. At a suggested duct sealing cost of about $0.20/ft2 of duct surface area, sealing leaky ducts in VAV systems has a simple payback period of about 1.5 years.
4. Best practice duct-modeling principles were documented for others to use, and will be very helpful in the development of future Title-24 performance compliance methods.
5. Models were developed for mechanical and natural ventilation and wind-driven cross ventilation. These models were implemented in the U.S. Department of Energy's building thermal response simulation tool, EnergyPlus.
6. The implementation of these models in EnergyPlus will provide engineers and designers with the ability to assess the effectiveness of a number of low-energy cooling options, including natural ventilation and displacement ventilation.
7. The models have been used to assess wind-driven ventilation for the new San Francisco Federal Building and for the design of the new Children's Museum in San Diego.

Description of Element 5 – Integrated Commissioning and Diagnostics:
The objective of this element is to assemble and develop a set of manual tools, test procedures and guides to support the commissioning of HVAC, lighting and other building systems. This work will result in diagnostic procedures and commissioning tools needed by owners, operators and the commissioning industry to perform and analyze test results and operate buildings efficiently. This element's work scope is organized into three large research projects: Commissioning and Monitoring for New Construction, Monitoring and Commissioning for Existing Buildings, and Advanced Commissioning and Monitoring Techniques.

Proposed Outcomes for Element 5:

1. A library of HVAC functional test procedures for medium and large commercial building systems is widely used, resulting in improved energy performance in California buildings.
2. A commissioning and monitoring design guide proves to be an effective reference for the development of building system specifications, allowing design intent to be realized in building construction projects.
3. Fault detection and diagnosis is improved by data monitoring and visualization systems and building simulation techniques, which allows building operators, engineers and energy service personnel to make equipment operation decisions that save energy and increase equipment lifetimes.
4. Methods to employ existing EMCS for monitoring and diagnostics are developed, facilitating large energy saving opportunities in medium and large commercial buildings.
5. High-speed electric meters prove to be effective at diagnosing equipment faults and are marketed both as stand-alone meters and as integral components of EMCS.
6. Occupant feedback systems are refined and integrated with building system controls to make decisions and take actions that improve occupant comfort.

Actual Outcomes from Element 5:

1. The Control System Design Guide (Design Guide) and Functional Testing (FT) Guide for Air Handling Systems was completed. The finished product is a MS Word document that is available at: http://buildings.lbl.gov/hpcbs/Element_5/FTG/ftg-reg.php
2. The Design Guide provides methods and recommendations for the control system design process, monitoring and control point selection, and installation. The FT Guide assists users to better understand the purpose, instrumentation, test conditions, potential problems, and cost-effectiveness behind air handling system test procedures. It also describes the theory behind the tests as well as sample calculations for quantifying the energy implications of problems that commissioning can identify.
3. A comparative review of current diagnostic tools was completed and widely distributed. This report is useful to building owners and operators considering the investment in diagnostics to improve their building system's performance. A detailed set of recommendations for technical improvements and interface enhancements are included that has proved helpful to the diagnostic tool vendors.
4. A comparative review of Energy Information System tools was completed and widely distributed. This report includes a technology characterization framework that has proved useful in understanding the application of these tools for California's demand response pilot programs.
5. Three monitoring guides were completed and distributed that enable owners and building engineers to determine how their EMCS can be used to collect data needed to monitor energy performance.
6. A Non-Intrusive Load Monitor (NILM) technology was enhanced and demonstrated to show the value of high-speed metering in the automatic detection of equipment scheduling and cycling, as well as in equipment fault detection.
7. A web-based user interface for energy and maintenance systems was developed to (1) allow occupants of commercial buildings to get access to building operational data relevant to them, and (2) use information from occupants in a systematic way to improve building operations.
8. An expert system called Maintenance and Operations Recommender (MORE) was developed. MORE uses information from computerized maintenance management systems (CMMS) and energy management and control systems (EMCS) to recommend what maintenance personnel should do in response to a maintenance service request or other event requiring a maintenance or control system action.
9. A guide was developed and distributed to inform building owners, managers, and operators about strategies for improving the persistence of building performance. This guide is a practical document each persistence strategy is described in detail: why it is important, what is involved, who performs the work and what other resources are available.

10. A methodology for the rapid calibration of cooling and heating energy consumption simulations for commercial buildings based on the use of "calibration signatures," which characterize the difference between measured and simulated performance, was developed and presented in a manual.
11. The ASHRAE Simplified Energy Analysis Procedure has been evaluated in two field tests and has served to identify multiple faults in building HVAC operation and provided accurate predictions of the savings that resulted from correcting the faults.
12. A library of HVAC component models and a toolbox of software procedures to support component-level, functional testing, and performance monitoring was developed and implemented. The software is available from the HPCBS website for control and equipment manufacturers to use as a starting point in the implementation of model-based fault detection procedures in products, and for others to use in developing tools for HVAC functional testing, performance monitoring, and fault detection.

Description of Element 6 – Indoor Environmental Quality:
The purpose of this element is to demonstrate and stimulate the use of HVAC technologies and indoor pollutant source control technologies that save energy and simultaneously improve IEQ, providing a foundation for improvements in the health and learning of students. This element is composed of two related research projects: Energy Simulations and Projected State Wide Energy Savings, and Energy & IAQ Field Studies.

The research objectives of this element are to:

- Measure and evaluate energy savings, costs, and improvements in thermal comfort, indoor air quality, and noise achieved with advanced HVAC system and building interior finish material selection.
- Develop new, timely information on indoor environmental conditions in California Relocatable Classrooms (RCs).
- Evaluate the accuracy of models to predict energy consumption in RCs and upgrade computer modeling tools, and thus estimate the potential energy savings from widespread use of the energy-efficient HVAC technologies in RC and similar modular buildings.

Proposed Outcomes for Element 6:

1. Field tests of advanced HVAC technologies suitable for RCs demonstrate energy performance and IEQ improvements.
2. Field test results improve computer models, which are then used to estimate the energy savings potential for advanced HVAC technologies in RCs and other building types for a range of California climate regions. This information provides a sound basis for school districts and their consultants to save energy and improve the IEQ of California schools.
3. Volatile Organic Compound (VOC) source control measures in RCs are evaluated and the results are shared widely with RC manufacturers, promoting healthier learning and teaching environments in California schools.

Actual Outcomes from Element 6:

1. An advanced hybrid HVAC system was designed and demonstrated in California classrooms. These systems saved substantial energy, provided thermal conditioning comparable to conventional HP/AC systems, and significantly reduced indoor pollutants.
2. Statewide energy saving estimates were computed for the advance hybrid system using computer models that were validated with the actual energy performance of the demonstration classrooms.
3. Wall, carpet and ceiling material alternates were specified and incorporated into the demonstration relocatable classrooms after laboratory VOC and aldehyde source strength testing was completed for major building materials.
4. Results of the IEQ field study have stimulated the RC HVAC industry to accelerate in investing in development of new energy-efficient and IEQ-appropriate HVAC systems. The results of the building material selections have also influenced the specifications for relocatable classrooms that are used by California's Office of Public School Construction.

Project Status:

The project has been completed.

BLDGS Projects Completed in 2002

Conceptual Design Energy Analysis Tool (CDEAT) R&D

Contract #: 500-98-023
Contractor: GeoPraxis, Inc.
Subcontractors: Artifice, Inc.
Contract Amount: $452,655
Match Amount: $194,900
Contractor Project Manager: Tom Conlon (707) 766-7010
Commission Contract Manager: Martha Brook P.E. (916) 654-4086
Status: Completed

Project Description:
The purpose of this project is to design and develop an easy-to-use, market transforming energy analysis software module (based on simulation technology) that will be seamlessly integrated with an existing 3-D conceptual building design software tool. The powerful (DOE-2 based) analysis tool will be hidden within the 3-D software tool. Target users will be energy non-experts – primarily architects, design/build contractors, developers – who will be able to generate reliable estimates of the relative energy performance of a new building in its earliest stage of design. The tool's parametric capabilities will allow users to understand and test the energy-related impacts of their designs, including fuel and material choices, system types, orientation, fenestration layout and other key decisions which often become fixed at this early stage of the construction process.

This project supports the PIER Program objective of:

- Improving the energy cost/value of California's electricity by helping architects, design/build contractors and developers generate reliable estimates of the energy performance of a building while it is still in its earliest stage of design.

Proposed Outcomes:

1. A software product that provides annual energy consumption, peak power demand, and annual energy costs for two modeled alternatives: 1) a code-complying building and 2) a "best practice" building.
2. A software product that will facilitate the estimation of building energy consumption during the early stages of architectural design.
3. Software commercialization.

Actual Outcomes:

1. Several technical and market research activities were completed that documented the design practices of building designers, including interviews, a technical colloquium, a web survey and a focus group.
2. Development of Green Building XML (gbXML) – an open data format for sharing architectural CAD data with energy analysis, facilities management, and other downstream applications (http://www.idea-server.com/gbxml.htm).
3. Development of the Energy Analysis Module (EAM) – an easy-to-use web-based energy software tool that provides a quick estimate of energy use and cost and automatically creates a robust simulation model to share with other design team members.
4. Development and marketing of a Software Developers Kit (SDK) – extensive documentation and tools to help upstream CAD firms integrate the EAM software into their applications (http://www.idea-server.com/eam_sdk.asp).
5. Demonstrated EAM interoperability with DesignWorkshop (3D CAD) and several well-known energy analysis tools: TRANE Trace 700, eQuest/DOE-2, PowerDOE, and $\text{EnergyPlus}_{\text{beta}}$.

Project Status:
This project has been completed. The software reached the alpha stage of development, with a proof-of-concept successfully demonstrated.

HVAC Distribution Systems in Commercial Buildings

Contract #: 500-98-026
Contractor: Lawrence Berkeley National Laboratory
Contract Amount: $537,000
Match Amount: $413,000
Contractor Project Manager: Mark Modera (510) 486-4678
Commission Contract Manager: Martha Brook P.E. (916) 654-4086
Status: Completed

Project Description:
The purpose of this project is to obtain the scientific knowledge properly to measure and compare commercial buildings' thermal-distribution-system performance in terms of energy efficiency and indoor air quality. This new information will be applied to designing better thermal distribution systems in new commercial buildings and retrofitting existing systems to reduce their energy consumption and peak-electrical demand. This project will also develop and test Lawrence Berkeley National Laboratory's (LBNL) aerosol-based duct retrofit technologies to determine the extent to which they reduce duct leakage, conduction losses and energy consumption and demand. Approximately one-third of the electricity used in California commercial buildings is consumed by heating, ventilation and air conditioning (HVAC) equipment. Research suggests that the HVAC thermal distribution systems in these buildings suffer from a number of problems, such as duct leakage and thermal losses due to poor duct location.

This project supports the PIER Program objectives of:

- Improving the reliability/quality of California's electricity by reducing peak summer HVAC electrical demand.
- Improving the energy cost/value of California's electricity by eliminating the waste from leaky HVAC distribution systems.
- Improving the environmental and public health costs/risks of California's electricity by improving indoor air quality through sealing HVAC thermal distribution systems.

Proposed Outcomes:

1. Characterization of large commercial building thermal distribution system performance.
2. Metrics to benchmark the performance of the thermal distribution systems.
3. Techniques for applying duct coating and sealing material in large commercial buildings.

Actual Outcomes:

1. Confirmation that duct-leakage airflows can significantly impact energy use in large commercial buildings.
2. Development of a new metric for distribution system efficiency.
3. Demonstration of a reliable test for determining duct leakage airflows.
4. Development of new techniques for duct sealing.

Project Status:
This project is complete. The results from this project will help the analysis of new requirements for commercial thermal distribution system efficiency in future revisions to California's Title 24 nonresidential building efficiency standards.

Improving Energy Efficiency of Commercial Kitchen Exhaust Systems

Contract #: 500-98-031
Contractor: Pacific Gas and Electric Company
Subcontractors: Electric Power Research Institute (EPRI) : Fisher Consulting : Architectural Engineering Corp. : International Facility Management Association
Contract Amount: $276,165
Match Amount: $225,000
Contractor Project Manager: Grant Brohard (415) 973-0106
Commission Contract Manager: Don Aumann (916) 654-4588
Status: Completed

Project Description:
The purpose of this project was to improve the energy efficiency of commercial kitchen ventilation systems by identifying optimal make-up air strategies and publishing design guidelines for the food service industry. The project team evaluated various combinations of exhaust hoods, cooking equipment, and makeup air configurations.

This project supports the PIER Program objective of:

- Improving the energy cost/value of California's electricity by providing more energy efficient methods for ventilating commercial kitchens.

Proposed Outcomes:

1. Demonstration that improving makeup air systems can improve energy efficiency of Underwriters Laboratories (UL)-listed commercial kitchen hoods by 40 percent.
2. Recommendation to the American Society for Testing and Materials (ASTM) for using Schlieren flow visualization system technology for the ASTM F 1704-96 Standard Test Method for Performance of Commercial Kitchen Ventilation Systems.
3. Information for possible updates to heating, ventilation and air conditioning (HVAC) design manuals by the American Society of Heating Refrigeration and Air Conditioning Engineers (ASHRAE) on commercial kitchen ventilation systems, using makeup air.
4. Comprehensive design guidelines for commercial kitchen ventilation systems.
5. Objective, visual information and analytical software on commercial ventilation equipment performance to help food service operators make informed decisions about exhaust hood design, sizing and energy efficiency.

Actual Outcomes:

1. The research team tested 214 different make-up air scenarios incorporating multiple different hood styles, make-up air configurations, different types of appliances, and varying environmental conditions. Schlieren visualization technology was employed in each case to verify effluent capture and containment at different exhaust levels. Although actual energy savings depend heavily on the specific application, one case study demonstrated a 60 percent reduction in required make-up air.
2. Team members participated in the ASTM F26 committee and influenced updates to ASTM F 1704-96 based on the research findings.
3. Research findings have informed ASHRAE Standard 154 and ASHRAE handbooks.
4. A Design Guideline based on the research findings is scheduled for Energy Commission publication in early 2003.
5. Researchers have influenced exhaust hood design and selection in many organizations, including leading fast-food restaurant chains and kitchen equipment suppliers. Outreach efforts have included statewide seminars at utility design centers, national conference papers and presentations, and trade magazine articles. Further demonstration projects are planned with utilities through the Emerging Technologies Coordinating Council (ETCC).

Project Status:

The project has been completed and the Final Report and Design Guidelines were published in December 2002 and are available on the PIER Buildings web site (http://www.energy.ca.gov/pier/reports/500-03-007f.html). For more information see the contractor's project website (www.archenergy.com/ckv).

Next-Generation Power Management User Interface for Office Equipment

Contract #: 500-98-032
Contractor: Lawrence Berkeley National Laboratory
Contract Amount: $449,841
Contractor Project Manager: Alan Meier (510) 486-4740
Commission Contract Manager: Don Aumann (916) 654-4588
Status: Completed

Project Description:
The purpose of this project is to develop and assess energy-efficient power management interface standards adaptable to a variety of office equipment and appliances used in commercial buildings. Electricity savings from the power management of office equipment have been one of energy-efficiency's premier success stories. Despite this success, many devices that are capable of power management are not saving energy because the power management features are disabled, incorrectly configured, or thwarted by a hardware or software conflict. The goal of this project is to capture energy savings by increasing the rate at which power management is enabled and operates successfully.

Technical challenges include identifying clear and simply interface elements and a system which meets the needs of all manufacturers. The US Department of Energy (DOE) and the US Environmental Protection Agency (EPA) have, through the ENERGY STAR Program, committed their institutional resources to ensuring the active participation of industry. The standard, however, will be voluntary – no company will be required to use it – and can be adhered to entirely or partially by manufacturers. This voluntary approach allows gaining the benefits of a standard while retaining flexibility for manufacturers that believe that they can improve on the interface, or have a product with unique or unanticipated features.

This project supports the PIER Program objective of:

- Improving the energy cost/value of California's electricity by improving the energy efficiency of commercial-sector office equipment and appliances.

Proposed Outcome:

1. A new, standard user interface for office equipment power management that is acceptable to electronic equipment manufacturers, standards organizations and the U.S. EPA's Energy Star program for voluntary adoption.

Actual Outcomes:
The project was completed in late 2002. The contractor developed a draft standard (IEEE 1621), tested the proposed components, and obtained extensive industry support for the proposed components. The contractor also established an IEEE (Institute for Electrical and Electronic Engineers) working group to get the draft standard finalized and adopted.

The draft standard includes the following components:

1. Use only three power states when possible: *On*, *Off*, and *Sleep*.
2. Use the word "Power" for terminology about power.
3. Redefine the ⏻ symbol to mean "power" as for power buttons and power indicators.
4. Use the ⏼ symbol (on/off) only when necessary.
5. Use the "sleep" metaphor for entering, being in, and coming out of low-power states.
6. Use the moon symbol — ☾ — for *sleep*.
7. Adopt "green/amber/off" color indications for power state indicators.
8. Present computer "hibernate" modes as a form of *off*.
9. Use flashing green on the power indicator for powering up and flashing amber for powering down.

10. Power buttons should toggle between the two most common power states.
11. When a device is *asleep*, pressing the power button will (usually) wake it up.

Project Status:
The project is complete. The final report and the draft IEEE standard were completed December 2002 and are posted on the PIER Buildings web site (http://www.energy.ca.gov/pier/reports/500-03-012f.html). For more information see the contractor's project web site (http://eetd.lbl.gov/EA/Controls/).

Sustainable Building Fiscal/Economic Analysis

Contract #: 500-00-026
Contractor: State Consumer Services Agency
Contract Amount: $50,000
Contractor Project Manager: Arnie Sowell (916) 653-4090
Commission Contract Manager: Martha Brook P.E. (916) 654-4086
Status: Completed

Project Description:
The purpose of this project is to develop a methodology for analyzing the cost effectiveness of sustainable building strategies and features. The project will develop tools that will enable the State of California to specify, design, deliver, maintain and operate sustainable buildings. These tools and methodologies must provide California's Department of Finance and the Department of General Services with defensible rationale for funding sustainable features and systems in new and retrofit state building projects.

This project supports the PIER Program objectives of:

- Improving energy cost/value of California's electricity by including energy efficiency and other sustainable building features into the valuation of state buildings, during the time when these buildings are being designed and funded.
- Improving the environment, public health and safety by incorporating sustainable building practices into state building construction processes.

Proposed Outcomes:

1. An extended life cycle cost methodology is established that incorporates sustainable building practices and features.
2. This extended life cycle cost methodology is adopted by the Department of Finance and incorporated into their capital outlay processes for new state building construction projects.
3. Other public and private building construction projects are funded by processes that incorporate this extended life cycle cost methodology.

Project Status:

This project did not proceed in a timely manner and, when the State Consumer Services Agency was ready to begin work, the term of this contract had expired. The analytical work, however, is being funded by other state agencies and is proceeding in two phases, with the first exploratory phase currently underway. The PIER Buildings program may participate in the second phase of this work, which will have the same proposed outcomes as those listed above.

BLDGS Projects Completed in 2001

A Tool for the Comprehensive Analysis of Low-Rise Residential Buildings

Contract #: 500-98-025
Contractor: Eley Associates, Inc.
Contract Amount: $216,190
Match Amount: $200,000
Contractor Project Manager: Charles Eley (415) 957-1977
Commission Contract Manager: Martha Brook P.E. (916) 654-4086
Status: Completed

Project Description:
The purpose of this project was to develop an energy design and analysis software program to enable homeowners and members of the residential building sector to perform a variety of analyses related to energy efficiency choices in home construction, retrofits and remodels.

This project supports the PIER Program objective of:

- Improving the energy cost/value of California's electricity by helping homeowners and other members of the residential building design community generate reliable estimates of the home energy performance.

Proposed Outcomes:

1. A software product that provides annual energy consumption and annual energy costs for a variety of home envelope, equipment and system design alternatives.
2. Software commercialization.

Actual Outcome:

1. Home Energy software available at http://www.eley.com/gdt/index.htm.

Project Status:
The project has been completed.

Center for the Built Environment (CBE) Membership

Contract #: 400-99-001
Contractor: Regents - Berkeley
Subcontractors: California Department of General Services : Henningson, Durham & Richardson, Inc. : International Facility Management Association : Johnson Controls, Inc. : Lucent Technologies : Ove Arup & Partners, Ltd. : Pacific Energy Center : Tate Access Floors, Inc. : United States Department of Energy : United States General Services Administration : Alfa Tech Consulting Engineers : Critchfield Mechanical : Rosendin Electric : Webcor Builders : York International Corporation
Contract Amount: $60,000
Contractor Project Manager: Kevin Powell (510) 642-4950
Commission Contract Manager: Philip Spartz (916) 654-4592
Status: Completed

Project Description:
The purpose of this project is to allow the Commission membership privileges in the university/industry/government research collaborative Center for the Built Environment (CBE) for a two-year period from 1999 to 2001. Membership in this UC Berkeley-based collaborative to promote leading-edge commercial building design will leverage public funds for greater benefit to citizens of the state. CBE performs research on energy efficiency in buildings, comfort for building occupants, indoor air quality, and design of more-productive building environments. CBE produces information in the form of guidelines and reports for dissemination to architects, designers, mechanical and building engineers, government agencies, and other entities that create indoor environments through a variety of research projects.

This project supports the PIER Program objectives of:

- Improving the energy cost/value of California's electricity by encouraging energy efficiency in the heating, cooling, ventilation, and lighting of buildings.
- Improving the environmental and public health costs/risks of California's electricity by reducing pollution associated with electricity generation through encouraging the efficient use of energy in buildings and providing healthier indoor environments by improving indoor air quality.

Proposed Outcomes:

1. Participation at semi-annual Industry Advisory Board meetings, where members from both industry and academia hear updates on the several building research projects.
2. Direct connection with building industry and government leaders interested in promoting more efficient building technologies.
3. Advance copies of technical papers by CBE researchers and access to their members-only section website area, which contains most recent papers and other information not available to the public until after a certain time period passes.
4. Prioritized response and technical advice from CBE experts in areas such as underfloor air distribution (UFAD), operable windows and ventilation impacts on productivity.

Actual Outcomes:

1. Commission staff attended the four semi-annual meetings held in October, 1999:
   - April 2000
   - October 2000
   - April 2001
2. Received project updates from CBE researchers.
3. Received technical papers on underfloor air distribution (five different projects), occupant feedback to improve building operations, speech privacy in offices, ventilation impacts on productivity, occupant satisfaction surveys and post-occupancy evaluations of buildings, and wireless measurement and control of indoor environments.

Project Status:

The CBE membership ended August 30, 2001. Funding for the CBE Membership has continued under PIER Contract # 500-01-001, approved in October of 2001. Research was on schedule and within budget. See CBE website at http://www.cbe.berkeley.edu/ for specific project information and papers.

Characterization of Framing Factors for New Low-Rise Residential Building Envelope

Contract #: 400-00-002
Contractor: Enermodal Engineering Incorporated
Subcontractors: R. Chitwood.
Contract Amount: $61,000
Match Amount: $85,810
Contractor Project Manager: Stephen Carpenter (519) 743-8777
Commission Contract Manager: Don Aumann (916) 654-4588
Status: Completed

Project Description:
The purpose of this project is to extend a national survey of current residential framing practices to include California homes. This survey, sponsored by the American Society of Heating, Refrigerating and Air-Conditioning Engineers (ASHRAE), will help improve the accuracy of calculating overall envelope heat loss/gain. Sixty California dwellings will be audited during construction to assess the amount of framing.

More specifically, the researchers will:

- Develop a statistically representative set of framing factors for low-rise dwellings in the State of California.
- Quantify the distribution of framing within dwellings (e.g., walls, windows, ceilings).

This project supports the PIER Program objective of:

- Improving the energy cost/value of California's electricity by improving the energy efficiency of residential dwellings.

Proposed Outcomes:

- Revised framing factors for California homes.
- Suggestions for changes to Title 24.

Actual Outcomes:
The research team found that framing factors in California were very similar to those in the national survey and that little additional framing is used in California to meet seismic requirements. More specifically, framing factors (net of windows, doors, skylights, etc.) for new California homes are:

- 7 Percent Ceiling
- 27 Percent Wall
- 15 Percent Overall

The results are included in the proposed 2005 Title 24 revisions, which specify a 25 percent framing factor for walls.

Project Status:
The project is completed. The final report (P500-02-002) was completed in early 2002.

Increased Energy Efficiency of Refrigerators and Air Conditioners Through Use of Advanced Power Electronics

Contract #: 500-98-021
Contractor: Energy Savers International
Subcontractors: Lawrence Berkeley National Laboratory : Ed Vineyard : Hybrid Circuits, Inc. : Sun Frost : Bristol Compressors : Robert Lynette
Contract Amount: $411,614
Match Amount: $242,131
Contractor Project Manager: T. S. (Jay) Jayadev (408) 257-6465
Commission Contract Manager: Philip Spartz (916) 654-4592
Status: Completed

Project Description:
The purpose of this project was to develop an energy-efficient electronic control system by which refrigerators and air conditioners with single-phase compressor motors could be operated more energy efficiently using three-phase motors. Because three-phase motors are more efficient and less costly to manufacture, there was a significant potential for reducing the electrical consumption of conditioners and other residential appliances. In addition, this project was expected to help decrease the load energy consumption of air conditioners that have a significant effect on peak loads.

Successful completion of this project was expected to increase the efficiency of residential refrigerators by approximately 19 percent, with no increase in cost to consumers. The technology would be applicable to other residential appliances that use single-phase motors such as air conditioners, heat pumps, washing machines and clothes dryers, and promised potentially huge energy savings for such appliances.

This project supported the PIER Program objectives of:

- Improving the energy cost/value of California's electricity by making an existing energy technology more efficient, thereby lowering the cost of electricity for cooling and electric heating to residential customers.
- Improving the reliability/quality of California's electricity by helping to reduce peak electrical demand from residential cooling.

Proposed Outcomes:

1. Development of an electronic control system that allows three-phase compressor motors to operate on single-phase electrical power. Operation with three-phase power significantly reduces electric motor conversion losses, so that the use of three-phase motors for residential applications will be economically feasible.
2. Demonstrate a 30 percent increase in efficiency for a typical domestic refrigerator compressor by improving the energy efficiency ratio (EER) from 5.4 to 7.0.
3. Demonstrate a thirty percent increase in efficiency for a typical domestic heat pump compressor.

Actual Outcomes:

1. Comparison of predicted refrigerator compressor efficiency increases (only 10 percent) and predicted unit cost did not justify designing power electronics for this application, so work was shifted to focusing on domestic heat pumps instead.
2. For domestic heat pumps and air conditioners units equipped with multiple-speed, three-phase compressor motors, efficiency increases of 30 percent were predicted, when compared to units with single-speed, single-phase motors.
3. A combined electronic power supply/three-speed controller was designed and built that easily fits inside existing cabinets of heat pumps or air conditioners this improves on mechanical multi-speed technology, which is often quite bulky.
4. The prototype combined power/controller unit proved to have a low power factor. Although adding a filter circuit would improve performance, cost factors precluded such development. A

commercial power supply was used instead and research was then focused specifically on developing an electronic controller.

5. Estimated phase conversion efficiency increases for an air conditioner in going from single-phase to three-phase power were found to be on the order of 4 percent.
6. Measured speed conversion efficiency increases for an air conditioner going from single-speed to three-speed operation were about 19 percent when using the default degradation coefficient in ARI standard 210/240-94 of 0.25.
7. Estimated controller costs for residential heat pumps or air conditioners is approximately $100/ton, installed for units 5 tons and above, approximately $80/ton.
8. Laboratory testing of the heat pump electrical performance verified that lower compressor motor speed reduced unit power requirements proportionately.
9. Although full-load air conditioner operation at high temperature (105°F) did not improve unit efficiency, the controller developed through this research can operate the air conditioner at reduced speed and proportionately reduced electrical demand. For example, half-speed operation dropped power requirements from 5.5 kW to 2.5 kW.

Project Status:
This project was completed December 19, 2001. The contractor has demonstrated that power electronics can increase the energy efficiency of domestic heat pumps and air conditioners and is pursuing further market connections.

Lighting Research Center Partners Program Membership

Contract #: 400-99-017
Contractor: Rensselaer Polytechnic Institute
Contract Amount: $50,000
Contractor Project Manager: Jennifer Brons (518) 687-7136
Commission Contract Manager: Don Aumann (916) 654-4588
Status: Completed

Project Description:
Membership in the Lighting Research Center (LRC) during 2001 allowed the California Energy Commission (Commission) to leverage public benefit research expenditures for maximum benefit by combining Commission funding with other members' funding. The Commission's funding will support specific research as well as developing and implementing public interest RD&D policies and programs that encourage well-functioning energy markets through advancements in science and pre-competitive technology that promise to enhance California's economy and/or environment.

As a result of membership participation in LRC the California Energy Commission realizes the following benefits:

- Participation in the annual LRC Partners meeting, providing opportunities to help direct future research.
- Working relationships with LRC staff and industry leaders.
- Priority response and advice on technical issues to CEC employees.
- Access to a special restricted area of the LRC's website that posts research and market information only available to members.
- Complimentary advance copies of publications, reports and papers resulting from LRC-funded research activities.
- Priority consideration to the Commission's request for research to be conducted in a specific area or direction within the scope of the LRC's research program that would be beneficial to the state.
- Annual project updates and status reports.
- Privileges to obtain information through Bibliographic and database searches, and the use of LRC's Lighting Library, which includes a complete set of LRC faculty and staff publications.
- Discounts on LRC publications and research projects.

This project supports the PIER Program objectives of:

- Improving the reliability/quality of California's electricity system during peak load times by helping reduce lighting loads.
- Improving environmental and public health cost/risks of California's electricity by reducing harmful NO_x emissions and CO_2 emissions resulting from electricity generation.

Actual outcomes:
LRC staff participated in two on-site visits, updating Commission staff on lighting research and technology developments. Additionally, LRC provided:

1. A thorough technical review of the Commission's recently-released Advanced Lighting Guidelines.
2. Quick response to Commission staff questions about CFL impacts on the grid.
3. Insider information covering ongoing research such as a self-commissioning photosensor.
4. An opportunity for Commission staff to interface with the manufacturers of lighting products and to solicit industry input on lighting research issues.

Project Status:

This contract is now completed.

In October 2001 the California Energy Commission approved a $150,000 contract (#500-01-011) to extend the LRC organizational membership from 2002 through 2004.

BLDGS Projects Completed in 2000

Alternatives to Compressor Cooling

Contract #: 500-97-013 **Project #:** 3
Contractor: Regents - University of California
Project Amount: $350,000
Contractor Project Manager: Karl Brown (510) 287-3330
Commission Contract Manager: Randel Riedel (916) 654-4109
Status: Completed

Project Description:
The purpose of this project was to develop and evaluate house designs capable of providing comfort in California transition climates without the use of conventional compressor-based cooling. Compressor-based cooling is growing rapidly in transition climate zones inland from major California coastal urban centers. However, the low hours of air conditioning use in these areas create an extremely poor load factor with a substantial adverse effect on costs of service and electric system operations.

Compressor-less cooling will result in energy and peak demand savings in the warmer climate zones in California. With the highest practical market penetration, the potential avoided increase in new electric demand is estimated to be 0.5 Watt per square foot of new house area averaged across all new residential construction. The equivalent potential in retrofit is estimated to be one Gigawatt in California. Load factors would be improved with a substantial increase in system reliability and decrease in cost of service. In addition, air-conditioning system size will be reduced in more severe climates through the adoption of project design concepts.

This project supports the PIER Program objectives of:

- Improving the reliability/quality of California's electricity by reducing peak electrical demand created by compressor-based air conditioning.
- Improving the energy cost/value of California's electricity by reducing energy use and costs created by residential space cooling during summer "heat storms."

Proposed Outcomes:

1. Evaluate pilot houses and/or subdivisions using project-developed house designs.
2. Develop a prototype cost/capability-optimized alternative cooling system controller.
3. Provide technology transfer through design information dissemination, assistance, and evaluation.
4. Promote the project with design competitions.
5. Develop applications information to assist market transformation programs.

Actual Outcomes:

1. Evaluated pilot houses and/or subdivisions using project developed house designs.
    - A Northern California prototype house design was developed.
    - A Southern California prototype house was modified and a variation with street access to the garage was designed. Builders and developers in California were solicited to initiate a pilot house or subdivision program. Everyone contacted was interested in the prototype concepts and designs, but were unwilling or unable to commit to building a pilot project.
    - An expanded definition of "comfort" and the impact of Time of Use charges were both found to support the technology concept of the compressorless cooling design.
    - The Northern California prototype house performance simulation was not completed so applications and sizing information is based on the results from the Southern California house. The Northern California house is expected to perform even better.
    - Performance simulations demonstrated that compressorless technologies will not maintain comfort in the Southern California prototype house in all California transitional climates. However, a substantially downsized compressor (1.5 tons) operated in concert with the night ventilation and house design will maintain comfort in all transitional climate areas and in all

but the most severe hotter inland climates. The performance simulations for this phase of the ACC project have been re-checked and are correct.

- Appraisers indicated that the disadvantages of a smaller compressor or no compressor would be offset by the superior construction of this particular type of residence. However, they would prefer to make their determination of energy tradeoffs based on an existing model for comparison with standard designs and construction.

2. Developed a prototype cost/capability-optimized alternative cooling system controller.
   - A prototype low energy cooling control system to enable operation of the house for night ventilation was developed and tested in two houses. The result was a demonstrated reduction in compressor cooling use while comfort was maintained in a moderately hot climate.
   - Based on occupant interviews, the user interface was successfully used by the occupants to maintain comfort and reduce compressor use during an overheated period.
   - Occupants were able to operate the controller effectively although they did not necessarily understand the technical details of the mechanical system.
   - Feedback from the controller web page simulation confirmed the usefulness of the comfort range strategy in the interface design and identified modifications to the interface that will be revised in the next phase.
3. Provided technology transfer through design information dissemination, assistance, and evaluation.
   - The PIER research team presented the house designs, control design and program concepts to many individual builders, developers, architects and owners.
   - The house designs were presented in more formal venues including: Los Angeles Depart of Water and Power in regard to Playa Vista Development, the San Diego Regional Energy Office, LBNL Noon Lecture Series, CIEE Tri-annual Review, NAHB Green Building Conference, Green Building Challenge Conference, poster session at the PIER Conference "Energy Innovations '99", and to the following individuals in Washington, D.C.: Rich Karney (DOE), Mark Ginsberg (FEMP Director), George James (Building America), Larry Zarker (PATH), Sam Raskin (ENERGYSTAR Homes, EPA), Mark Nowak (NAHB Research Center).
   - The following publications were produced: Smart Thinking About Smart Houses, and Ventilation Cooling Without Losing Control.
4. Promoted the project with design competitions.
   - In 1999, a professional slide show and script on the concepts and prototype designs were developed and presented during the "Gold Nugget Awards" held at the annual Western Building Show.
   - Two custom homes with low energy cooling, shading, thermal mass and night ventilation received the "1999 Summer Performance Awards".
5. Developed applications information to assist market transformation programs.
   - Current trends in the residential industry which are complementary with compressorless strategies provide opportunities for market adoption. These include interest in "green buildings", "new urbanism", "concern for indoor air quality, health and environment", Energy Efficient Mortgages, and the embracing of "quality" as a marketing strategy.

Project Status:
The project has been completed.

Building Design Advisor

Contract #: 500-97-013 **Project #:** 8
Contractor: Regents - University of California
Project Amount: $350,000
Contractor Project Manager: Carl Blumstein (510) 287-3320
Commission Contract Manager: Tav Commins (916) 653-1598
Status: Completed

Project Description:
This project updated the Building Design Advisor (BDA), a Windows-based computer program that facilitates decision making through integrated use of multiple analysis tools and databases. This tool, when completed, will enable building designers to consider various energy efficiency options during the design stage of new buildings, when energy efficiency measures are typically more cost effective. The main deliverable for this project was to integrate DOE-2 into the tool. DOE-2 is a building energy simulation program that is the industry standard for producing detailed and accurate energy performance simulations.

This project supports the PIER Program objective of:

- Improving the energy cost/value of California's electricity by allowing energy-saving measures to be integrated into the early design of a building, thereby making energy-efficient measures more cost effective.

Proposed Outcomes:

1. Bring the initial BDA software from an unstable, incomplete Beta release to a robust 1.0 version for distribution to academia and the building industry for evaluation and feedback.
2. Develop an updated 2.0 version with links to DOE-2. This will demonstrate the expandability of the BDA software to include links to simulation tools already accepted and trusted by the building industry and make the BDA more appealing for use in actual projects.
3. Elicit industry feedback to identify industry needs and desires, towards BDA versions that will be appropriate for use in actual projects.
4. Prepare a commercialization strategy for widespread distribution of the software with proper user support.
5. Initiate developing a BDA-based Issue Based Information System (IBIS) that will facilitate the use of the BDA as a collaborative, concurrent design tool, and greatly enhance developing links to tools that address the whole building life cycle, from design through construction and commissioning, to operation and eventual demolition.

Actual Outcomes:

1. The BDA 1.0 has been in distribution since January 1999, free of charge through the Internet. To date, more than 450 reviewers have downloaded the software from the project's Web site. Approximately 150 reviewers are from academia (professors and students) and 300 are from the building industry (architects, engineers, energy consultants, etc.).
2. Beta releases of BDA 2.0, with links to DOE-2, were used in workshops with architects and engineers in the San Francisco, Los Angeles, and Sacramento areas. Useful comments were elicited through extensive interactions between the software developers and the building industry participants. Comments and suggestions were organized and prioritized based on workshop participants input.
3. The response to the BDA concept has been enthusiastic and has resulted in very useful feedback on the specific needs of building design professionals. Several university professors plan to use the BDA software in relevant architectural and engineering courses.
4. A commercialization report was prepared.

5. The design of the BDA-based IBIS was completed, with potential use scenaria and graphical user interface elements for implementation in future versions of the BDA software.

Project Status:
The project has been completed.

CIEE Collaborative Program Planning and Management

Contract #: 500-97-013 **Project #:** 1
Contractor: Regents - University of California
Project Amount: $600,000
Contractor Project Manager: Jim Cole (510) 486-4123
Commission Contract Manager: Bill Knox (916) 654-4048
Status: Completed

Project Description:
The purpose of this project was to coordinate the efforts undertaken in the eight CIEE Transition solicitation projects. The project was to provide planning, funding, management and technology transfer activities for these projects. CIEE was the primary link between the Commission's contract managers and the principal investigators. CIEE was to ensure that the administrative and reporting requirements of each project were met.

CIEE was scheduled to release a Request for Proposals (RFP) for the first phase of a new multi-year project known as the Market Transformation Research: New Commercial Buildings Project. This new project was to have been managed by CIEE. CIEE was to maintain an Internet web site that contains information on the Commission-funded Transition Solicitation projects as well as integrate technology transfer activities into the transition project activities.

Proposed Outcomes:
1. Manage the research and development of the new end-use efficiency technologies emphasized in CIEE projects.
2. Coordinate with the research teams, the CIEE Research Board and other Sponsor representatives in exploring the initial market applications of the new energy efficiency technologies.
3. Conduct a review of the CIEE R&D program by independent peer review panel.

Actual Outcomes:
Final report for each project produced:
1. CIEE recommended the establishment of a statewide, coordinated Emerging Technologies Initiative to the California Board for Energy Efficiency (CBEE) and the California Public utilities Commission (CPUC) in June and July of 1999.
2. CIEE, in collaboration with Energy Commission staff and CIEE Sponsor representatives, prepared and issued a Request for Proposals (RFP) to select a research team and detailed research plan for the CIEE multiyear project: Market Connections for New Commercial Building Technologies.
3. CIEE collaborated with Southern California Gas and other CIEE Sponsor representatives in planning and funding two public interest R&D projects involving low NO_x, energy efficient combustion of natural gas in industrial, commercial and other market applications.
4. Independent peer review conducted in April 1999, concluded that the overall quality of CIEE's R&D program was outstanding.

Project Status:
The project has been completed.

Commercial Building Lighting

Contract #: 100-98-001 **Project #:** 7
Contractor: Electric Power Research Institute (EPRI)
Subcontractors: University of Wisconsin : Polytechnic University of New York : Los Alamos National Laboratory : National Institute of Standards and Technology : Lighting Research Center : BKI, Inc. : New Buildings Institute, Inc. : Pacific Consulting Services : Osram-Sylvania, Inc. : Lighting Ideas, Inc. : Gough & Associates, Inc. : National Council on Quantification for Lighting Pr : Illumination Engineering Society of North America
Project Amount: $24,000
Match Amount: $204,323
Contractor Project Manager: John Kesselring (650) 855-2902
Commission Contract Manager: Gary Flamm (916) 654-2817
Status: Completed

Project Description:
The purpose of this project is to guide California ratepayers to new lighting systems that reduce their energy bills and boost worker productivity and comfort. EPRI's Lighting Information Office (LIO) provides world-class, up-to-date information on lighting technologies and cost-effective training and information services. LIO insights are captured in customer-friendly formats that the Energy Commission can easily customize for delivery to California ratepayers. EPRI has produced an array of system design and analysis software that Commission staff can use in calculating the performance, costs, and benefits of lighting options for any customer's application. In addition, EPRI via this Target is directing collaborative research to define the relationship between lighting and productivity.

This project supports the PIER Program objective of:

- Improving the energy cost/value of California's electricity by increasing the efficacy of lighting sources with advanced light source technology.

Proposed Outcomes:

1. Provide advanced lighting technologies information.
2. Provide analytical tools to assess advanced lighting technology options.
3. Advance the understanding of lighting benefits and accelerate the development of advanced, high-efficiency lighting products.

Actual Outcomes:

1. Technology information.
   - New information was provided through the Lighting Information Office on energy-efficient lighting—including residential compact fluorescent lighting, electronic ballasts, LED exist signs, and outdoor luminaries. This information can be used to upgrade lighting in all California state office buildings and to consider for new standards legislation.
   - Two training sessions were offered that addressed the unique design, cost, and customer applications issues posed by new advanced lighting products.
2. Analytical tools.
   - The Commercial Desk Book software package was provided. This package provides technical, marketing, and regulatory information on lighting systems and allows users to calculate and compare annual operating costs of different technologies.
   - Software support was provided for LightPAD (the EPRI lighting audit software), PowerDOE, Daylight Analyzer, and other products.
3. Understanding of lighting benefits, and development of advanced, high-efficiency lighting products.
   - A report described the effects of three different lighting configurations on office workers doing data entry tasks.
   - A publication was provided that reported on significant advances in scotopic vision. Information on the impacts of lighting on human performance can be used to ascertain

whether proper light levels are being implemented in office work, and to help ensure that reduced lighting levels do not compromise human performance.

- Research briefs were presented on basic research related to Hg-Ar and Ba as discharge light sources, which could double the energy efficiency of today's fluorescent lamps.

Project Status:
The Commission's participation in this target ended as of December 31, 1999.

Commercial Building Thermal Storage

Contract #: 100-98-001 **Project #:** 5
Contractor: Electric Power Research Institute (EPRI)
Subcontractors: Florida State Energy Center : University of Wisconsin
Project Amount: $40,000
Match Amount: $268,999
Contractor Project Manager: Mukesh Khattar (650) 855-2899
Commission Contract Manager: Martha Brook P.E. (916) 654-4086
Status: Completed

Project Description:
The purpose of this project is to continue developing and implementing thermal energy storage (TES) technology. TES is valued for its proven capacity to trim peak power costs and reduce chiller capacity requirements, often resulting in systems more economical overall than their non-storage counterparts. This can reduce California ratepayers' electric bills and stretch California electric generation capacity. The importance of these advantages is accentuated by the emergence of refrigerant phase-out issues and real-time pricing. Many customers with facilities well
suited to thermal storage are hesitant to move ahead because TES is sometimes seen as an unknown technology.

This project focuses on development of easy-to-use controls for optimal system operation, new analysis methods and data to improve the use of thermal storage in conjunction with real-time pricing, and technology demonstrations to build confidence and use of the technology.

This project supports the PIER Program objective of:

- Improving the energy cost/value of California's electricity by through development and application of thermal energy storage systems, which can reduce energy bills of California ratepayers.

Proposed Outcome:

1. Provide information to support the development, application, and commercialization of cool storage technology that is competitive with non-storage equipment in terms of efficiency and cost.

Actual Outcome:

1. Information to support development, application, and commercialization of cool storage technology.
    - A white paper was published that presented an analysis of the impacts of flexible and real-time price scenarios on the design of thermal energy storage systems.
    - Initial results were published of a field demonstration of a Near Optimal Cool Storage Controller at First Union Stadium in Philadelphia. These results can be used to analyze the viability of thermal storage for specific California sites.
    - An analysis was published of a capacity enhancement approach for chilled water thermal energy storage systems.

Project Status:
The Commission's participation in this target ended as of December 31, 1999.

Commercial Cooling and Heating Pump Applications (#1417)

Contract #: 100-98-003 **Project #:** 5
Contractor: Gas Research Institute
Subcontractors: Alturdyne : CoolTech, Inc. : Polar Works : Goettl : GTI Performing Laboratory
Project Amount: $77,100
Contractor Project Manager: Ron Edelstein (847) 768-0889
Commission Contract Manager: Brad Meister (916) 653-1594
Status: Completed

Project Description:
The purpose of this project is to develop and deploy cost-effective cooling products and maximize their market adoption and use. Major activities under this project include:

- Improved chiller performance.
- Updated state-of-the-art technologies for existing absorption chillers.
- Low-cost, engine-driven heat pump technologies for commercial applications.
- Hybrid chiller design protocols.
- Research results of advanced turbine component tests.

This project supports the PIER Program objective of:

- Improving the energy cost/value of California's electricity by providing cooling technologies that will reduce electricity consumption by California energy consumers.

Proposed Outcomes:

1. Hybrid Gas Engine/Electric Motor/Chiller: Development of a Hybrid Gas Engine/Electric Motor/Chiller capable of being run on either natural gas or electricity offering the customer the option of selecting their energy source. The second phase of the project will include reversing the motor to add generation capacity to the chiller for further electricity peak shaving flexibility.
2. Advanced Absorption Cooling: Develop and test a five-ton absorption-based natural gas cooling technology capable of reducing electricity demand by 5-kW per household or commercial application.
3. Gas Turbine Inlet Cooling: Novel approach to using natural gas cooling to cool the inlet air to gas turbines, increasing the available power output during hot weather. The technology envisioned will allow inlet air temperature to be dropped far lower than with conventional systems without causing turbine damage and therefore will produce significantly greater power from an existing turbine set than available with any other system. The overall effect is an increase in efficiency and a reduction in the capital cost of a turbine generating system.
4. Commercial Heat Pump: Development of a 15-30 refrigeration tons (RT) natural gas engine-driven heat pump with Goettl Air Conditioning.
5. Spray Absorption Technology: Development of technical data on spray distribution of solution for absorption chillers to ascertain technical feasibility.

Actual Outcomes:

1. Hybrid Gas Engine/Electric Motor/Chiller:
   The initial Hybrid Engine/Electric/Chiller product is now commercially available. The prototype 100-ton unit has been built with the motor to add generation capacity to the chiller for further peak shaving flexibility.
2. Advanced Absorption Cooling:
   Two laboratory prototypes were built and durability tested in the lab. Testing of one prototype in a certified test chamber has now been completed. The first test unit has been shipped to Brooklyn Union (now Keyspan Energy) for testing this summer.
3. Gas Turbine Inlet Cooling:
   The initial desiccant dehumidification alpha test was successfully completed. Discussions were conducted with a major turbine manufacturer. However, the manufacturer did not decide to

pursue the Polar Works approach due to the results of the modeling effort. This work has now been wrapped up and this contract is being closed out.

4. Commercial Heat Pump:
   The development of 15, 20, 25, and 30 RT units has been completed, and those units are now commercially available.
5. Spray Absorption Technology:
   The project has been completed, and results presented to Trane. After testing the concept, Trane decided not to move forward with this concept.

Project Status:
Efforts continue as planned for the Hybrid Gas Engine/Electric Motor/Chiller and Advanced Absorption Cooling projects. The Commercial Heat Pump project was successfully completed. Technical efforts were completed on the Gas Turbine Inlet Cooling and Spray Absorption Technology projects, but work has now been discontinued because manufacturers decided not to pursue the technologies.

Commercial Heat Pump/Air Conditioning

Contract #: 100-98-001 **Project #:** 4
Contractor: Electric Power Research Institute (EPRI)
Subcontractors: Lennox Industries : ClimateMaster, Inc. : Joint Center for Energy Management-University of Colorado : Alliant Energy : Bevilacqua-Knight, Inc. : Geothermal Design & Engineering, Inc.
Project Amount: $144,500
Match Amount: $1,186,322
Contractor Project Manager: Mukesh Khattar (650) 855-2899
Commission Contract Manager: Martha Brook P.E. (916) 654-4086
Status: Completed

Project Description:
The purpose of this project is to continue developing higher-efficiency, climate-wise refrigerants for the commercial heat pump and unitary air conditioner market. In California, this accounts for approximately one-third of the commercial sector's electricity use. Manufacturers are slowly developing electric equipment for the best refrigerants emerging from research. The slow pace of equipment development is a barrier to the broader use of commercial heat pumps. This project includes developing environmentally superior heat pumps, water-loop, and geothermal systems, and improving indoor air quality and dehumidification. The target also includes work on improved refrigerants and equipment to achieve greater comfort, lower noise, and lower capital and operating costs.

This project supports the PIER Program objectives of:

- Improving the energy cost/value of California's electricity by developing and enhancing the performance and efficiency of heat pump technology for space heating and cooling applications.
- Improving the environmental and public health costs/risks of California's electricity by reducing energy use which in turn decreases power plant emissions and supporting the changeover from ozone-depleting refrigerants to zero ozone-depleting (ZODP) fluids.

Proposed Outcomes:

1. Provide practical technical information to increase the market penetration of energy efficient heat pumps and new air conditioning technologies.
2. Support development and introduction into the market of commercial heat pump products with substantially improved comfort, efficiency, and environmental impact.
3. Support development and application of Water-loop and Ground-coupled/Geothermal Heat Pump (WL/GCHP) Systems.
4. Support development and application of energy efficient and cost-effective solutions to treat ventilation air and improve indoor air quality and dehumidification.

Actual Outcomes:

1. Technical information.
   - A status review report was published on EPRI commercial heat pump innovations.
   - Updates on industry news were published on refrigerant availability, refrigerant properties, and the ASHRAE 90.1 Standard.
   - The Geothermal Information Office provided information to EPRI members on the use of geothermal systems in commercial and residential buildings.
2. EPRI teamed with Lennox International to develop the first prototypes of Zero-Ozone Depletion Potential commercial rooftop heat pumps with 7.5 and 10-ton capacities. A lab test report was published.
3. Water-loop and ground-coupled heat pump technology.
   - EPRI sponsored development by ClimateMaster of a water-source air heat pump for conditioning of 100% make-up air. The design is more energy efficient than existing units and has features for improved occupant comfort.

- An evaluation was made of variable pumping strategies and operation of the SmartLoop Controller in buildings with water-loop heat pump systems.
- A field test report and a tech brief were published on results of energy performance monitoring of a geothermal heat pump in a quick service restaurant.

4. A report was published providing a summary of current and advanced strategies for designing HVAC systems to meet indoor air quality requirements.

Project Status:
The Commission's participation in this target ended as of December 31, 1999.

Commercial Thermal Distribution Systems

Contract #: 500-97-013 **Project #:** 4
Contractor: Regents - University of California
Subcontractors: Lawrence Berkeley National Laboratory
Project Amount: $400,000
Contractor Project Manager: Karl Brown (510) 287-3330
Commission Contract Manager: Mazi Shirakh (916) 654-3839
Status: Completed

Project Description:
The purpose of this project was to develop information and products that would improve the energy-efficiency and performance of heating, ventilation and air conditioning (HVAC) equipment in commercial buildings. This project assessed the performance of air-duct systems in California's commercial buildings, developed and tested duct-sealant and duct-encapsulation technologies specifically for applications in commercial buildings, and developed tools to diagnose the energy-performance of commercial building fan systems.

This project supports the PIER Program objectives of:

- Improving the reliability/quality of California's electricity by reducing peak demand and improving load factor, leading to reduced infrastructure costs and system reliability risks.
- Improving the energy cost/value of California's electricity by improving thermal performance of the commercial thermal distribution systems. Current data suggests that leakage in commercial thermal distribution systems is in excess of 20 percent, with additional excess energy use caused by fan system problems.
- Improving the environmental and public health costs/risks of California's electricity by improving indoor air quality through improved control of air flows and duct encapsulation technology.

Proposed Outcomes:

1. Advance knowledge about performance and losses for commercial building thermal distribution systems.
2. Evaluate the potential for reducing thermal losses through duct sealing, duct insulation, and improved equipment sizing.
3. Advances in innovative techniques for sealing ducts and encapsulating internal duct insulation.
4. Advances in protocols and techniques for testing, analyzing and diagnosing energy-related problems in large commercial building fan systems.

Actual Outcomes:

1. Identified significant duct leakage in large commercial buildings, with large associated energy losses.
2. Confirmed significant potential energy savings from duct sealing in large commercial buildings and identified building model enhancements that will allow incorporation of duct performance improvements in building energy standards.
3. Improved prototype equipment and field experience for duct sealing and encapsulation technology.
4. Made advances in tracer gas measurement techniques and refined protocols for diagnosing energy losses in large building fan systems.

Project Status:
The project has been completed.

Develop R&D Plan for PIER Buildings Team for Indoor Air Quality

Contract #: 100-98-001 **Project #:** 25
Contractor: Electric Power Research Institute (EPRI)
Subcontractors: Taylor Engineering : Building Ecology Research Group : Lawrence Berkeley National Laboratory : National Institute of Standards and Technology
Project Amount: $38,480
Contractor Project Manager: Mukesh Khattar (650) 855-2899
Commission Contract Manager: Nancy Jenkins (916) 654-4739
Status: Completed

Project Description:
The purpose of this project is to develop a comprehensive indoor air quality (IAQ) research plan, identify important gaps in this research as they pertain specifically to energy efficiency, target areas for future funding, and research, and prioritize research efforts that will specifically benefit California residents. Almost 70% of the California workforce works in non-industrial, non-agricultural indoor settings. Over the past 20 years, it has become clear that improper design, operation, and maintenance of HVAC systems have been implicated in infectious or allergic healthcare problems including increased frequency of colds and flu, hypersensitivity pneumonitis, sick building syndrome, and Legionnaires' disease. This project addresses IAQ through an interdisciplinary approach, uniting experts from several fields of study.

This project supports the PIER Program objectives of:

- Improving energy cost/value through optimizing the use of building HVAC systems and improving occupant health, productivity and comfort.
- Improving the environment and public health costs/risks of California's electricity by identifying key areas of research to mitigate IAQ-related illness and loss of worker productivity.

Proposed Outcome:

1. Identification of the highest priority research needs pertaining to the relationship of IAQ, health, occupant satisfaction, and worker performance with building energy use.

Project Status:
As of December 2000 the project was behind schedule and the Commission discontinued participation in the project.

Development of High Efficiency Lighting Torchieres

Contract #: 500-97-013 **Project #:** 6
Contractor: Regents - University of California
Subcontractors: Lawrence Berkeley National Laboratory
Project Amount: $90,000
Contractor Project Manager: Carl Blumstein (510) 287-3320
Commission Contract Manager: Mazi Shirakh (916) 654-3839
Status: Completed

Project Description:
This purpose of this project was to develop portable, high-efficiency, indirect torchiere fixtures that would use one of the next generation high-efficacy electrodeless or electroded fluorescent lamps. These fixtures are targeted at the commercial office interiors where there is a demand for high color quality and low-glare portable lighting. This proposed effort was a first step in the development and demonstration of new office torchiere lighting systems. Wide adoption of the technology developed in this project would significantly increase the penetration of high-efficiency fixtures in commercial interiors.

This project supports the PIER Program objective of:

- Improving the energy cost/value of California's electricity by improving the efficacy of the very popular torchieres. Incandescent torchieres are very inefficient and present a fire hazard. The proposed advanced torchieres reduce electrical consumption by 75 percent.

Proposed Outcomes:

1. Produce prototype fixtures that exploit the properties of the next generation of high efficiency advanced fluorescent lamps and advanced optical reflectors.
2. The prototypes were expected to have high color quality and low glare suitable for use in commercial office spaces.

Actual Outcomes:

1. The LBNL contract discusses high efficiency lamps with efficacies in the range of 83 to 100 lumens per watts. The actual outcome was lamps with efficacies in the 72 to 79 lumens per watt. The commercially available lamps currently have efficacies in the 55 to 69 lumens per watt.
2. The proposed lamps have color temperatures and color rendering indexes that are comparable or superior to what is commercially available.
3. LBNL also experimented with different types of optical reflecting materials, determining that white paint is the most practical due to cost considerations.
4. The retail costs are expected to be around $60-$70 a unit which is competitive with what is available now (which is around $50-$60 for high-end products).
5. Currently there are no torchieres with the uplight/downlight components and with the range of efficacies discussed above.

Project Status:
The project has been completed.

Diagnostics for Building Commissioning and Operations

Contract #: 500-97-013 **Project #:** 5
Contractor: Regents - University of California
Subcontractors: University of San Diego : SuperSymmetry : Stanford University : Jones Lang Wootten: California, Inc.
Project Amount: $350,000
Contractor Project Manager: Carl Blumstein (510) 287-3320
Commission Contract Manager: Joseph Wang (916) 654-4026
Status: Completed

Project Description:
The purpose of this project was to demonstrate a system that allows building occupants to monitor the energy use within their building, so they may determine if the building is performing at its optimum energy-efficiency level. This system will permit building occupants to
improve the energy-efficiency of their buildings by facilitating the identification of energy performance problems.

This project supports the PIER Program objective of:

- Improving the energy cost/value of California's electricity by helping customers optimize their building systems to perform at their peak energy efficiency.

Proposed Outcomes:
This project was to demonstrate an advanced operator information, monitoring and diagnostics system (IMDS) for whole-building commissioning and operations. The system and project objectives included:

1. High-quality sensors.
2. Knowledge base to identify system failure.
3. Automated communications and data management.
4. Data visualization to diagnose building energy performance problems.
5. Evaluating the energy savings and other non-energy benefits of IMDS use. The objective is to reduce total energy use and energy cost by 15 percent without sacrificing any other building services or performance issues.
6. Developing and demonstrating techniques to automate fault detection and diagnosis using a steady-state chiller model and evolutionary programming for self-learning systems.
7. Evaluating the decision making and technology adoption processes in the commercial buildings sector.

Actual Outcomes:

1. LBNL successfully demonstrated that the IMDS is very useful in evaluating the building's performance. The building operators perceive significant improvements in the performance of the building. These include improvements in control, reduced comfort complaints, and the identification of significant energy savings. Even more significant is that the IMDS has been useful in identifying an ongoing set of problems at the building that are related to problems inherent in the control systems.
2. LBNL developed a prototype stand-alone chiller data analysis tool was developed to provide the operations staff with additional diagnostic capabilities beyond the IMDS. However, neither the chiller diagnostic tools nor the utilization techniques are mature at this point.

Project Status:
The project has been completed.

Evaluate Small Air Conditioning Units for Northern/Central California

Contract #: 500-97-010 **Project #:** 1
Contractor: Pacific Gas and Electric Company
Project Amount: $500,000
Contractor Project Manager: Lance Elberling (925) 866-5519
Commission Contract Manager: R.Michael Martin (916) 654-4039
Status: Completed

Project Description:
This purpose of this project was to:

- Identify those technologies that can potentially improve the energy efficiency of air conditioning applications using rooftop packaged air conditioners on small commercial buildings in hot-dry climates.
- Document the actual performance of two selected technologies through laboratory testing over a range of operating conditions.
- Provide this information to the HVAC market to encourage the adoption of appropriate technologies.

This project supports the PIER Program objective of:

- Improving the energy cost/value of California's electricity by providing electricity customers in the commercial sector with information on energy-efficient options to cool their facilities.

Proposed Outcome:

1. Identify several technologies that could potentially improve the energy efficiency of air conditioning technologies with sufficient detail to enable specifiers of equipment to make good informed choices.

Actual Outcomes:

1. Documented several such technologies, with detailed information about performance of two such technologies at a variety of outdoor temperature and humidity conditions.
2. Used evaporative condenser pre-coolers that resulted in greater energy savings in hot dry climates at greater initial cost and is recommended for retrofit applications.
3. Used conventional design high efficiency air conditioners with dual compressors which had more modest performance improvements at a lower additional first cost and is recommended for new applications.

Project Status:
The project has been completed.

Improve C/E of Building Commissioning

Contract #: 500-97-010 **Project #:** 2
Contractor: Pacific Gas and Electric Company
Subcontractors: Schiller Associates : ESS Engineering, Inc. : Joint Center for Energy Management-University of Colorado
Project Amount: $300,000
Contractor Project Manager: Steven Blanc (925) 866-5570
Commission Contract Manager: Joseph Wang (916) 654-4026
Status: Completed

Project Description:
The purpose of this project was to investigate and demonstrate cost-effective and energy-efficient methods for the commissioning of medium to large buildings that have complex mechanical, lighting, and energy management control systems. Commissioning would insure that buildings designed for maximum energy-efficiency perform as intended, thereby reducing energy costs associated with building operations.

This project supports the PIER Program objective of:

- Improving the energy cost/value of California's electricity by developing tools to analyze, and guarantee, the performance of energy-efficiency measures.

Proposed Outcomes:
A major obstacle to wide-spread adoption of building commissioning is cost. This project created commissioning techniques more effective and less costly to implement. These techniques were tested in a laboratory and a demonstration site to evaluate their performance. The system included high-quality sensors, a knowledge base to identify system failure, automated communications and data management and data visualization to diagnose building energy performance problems. In addition, the project developed:

1. Specifications for a building fault detection and diagnostics technique that would provide a platform for further commercial development and provide information needed to automate the diagnosis of building energy performance problems.
2. A commissioning tool which would focus on the identification of minimum historical data requirements necessary to accurately predict cooling system performance in a typical commercial building.
3. A measurement and verification tool that would allow users to evaluate different measurement scenarios to determine cost effectiveness for specific energy-efficiency measure.

Actual Outcomes:

1. Developed a model-independent, fault detection and diagnostics for variable air volume terminal units. This commissioning tool is based on the use of a residual approach to develop fault detection and diagnostics tool preprocessors. This avoids the traditional use of model based approach requiring that a tool be calibrated using large amount of historical data.
2. Developed a first principles model for integrated cooling systems. This tool focuses on the identification of the minimum historical data requirements necessary to accurately predict cooling system performance in a typical commercial building.
3. Developed a building automation control network (BACnet)-based control system driver to facilitate fault detection and diagnostics (FDD) in open architecture energy management control systems. This tool is a generic communications interface for controls systems employing BACnet gateway open protocols. This allows building operators access building data with any building control systems.
4. Developed a measurement and verification value tool that is a data base-driven program that allows the user to evaluate different measurement and verification scenarios to determine cost and saving uncertainty for specific energy efficiency measures.

Project Status:
The project has been completed.

Residential Heat Pump Technology

Contract #: 100-98-001 **Project #:** 1
Contractor: Electric Power Research Institute (EPRI)
Subcontractors: D.W. Abrams : P.E. & Associates : Pacific Consulting Services : OG&E Electric Services Company : Oregon Department of Energy : Saturn Resource Management : Southern California Edison
Project Amount: $293,697
Match Amount: $1,129,818
Contractor Project Manager: Richard Myhre (510) 444-8707
Commission Contract Manager: Bill Pennington (916) 654-5013
Status: Completed

Project Description:
The purpose of this project is to support EPRI's continuing development of high-performance (energy efficient) heat pumps and their efforts to deliver quality data and services to invigorate the market. Working with manufacturers and research partners, EPRI is supporting production of climate-wise air and geothermal heat pumps, demonstrating heat pump applications, verifying performance and energy efficiency, and pursuing refinements to the "Insider" heat pump, a compact unit for multifamily and manufactured housing. This target also delivers products
on duct system design and duct sealing technology to further reduce energy waste, and collaboration on a national technician certification program to address installation and customer
satisfaction issues.

EPRI's collaborative program impacts technology development and heat pump infrastructure nationally. This, in turn, benefits California users to ensure a continued positive market environment for residential heat pumps. The Commission will receive technical information and persuasive promotional materials for local educational activities to stimulate residential customer's interest.

This project supports the PIER Program objectives of:

- Improving the energy cost/value of California's electricity by developing and enhancing the performance and efficiency of residential heat pump technology to reduce the energy needs for space heating and cooling applications.
- Improving the environmental and public health costs/risks of California's electricity by reducing energy use, which in turn decreases power generation emissions, and by supporting the changeover from ozone deleting refrigerants to Zero Ozone Depletion Potential (ZODP) fluids.

Proposed Outcomes:

1. Provide tools to increase the use of Zero Ozone Depletion Potential (ZODP) Refrigerants.
2. Provide tools to increase the potential for the use of Air-Source Heat Pumps.
3. Provide information to support market-ready enhanced, integrated heat pumps.
4. Develop a Technician Certification program to improve the likelihood of proper heat pump selection and proper installation.
5. Supply information to increase the potential for use of Ground-Source Heat Pumps (GHP).
6. Compile information to increase the potential for use of Thermal Distribution Systems Development and Applications.
7. Conduct a Tailored Collaboration entitled "Research on Heat Pump Performance Maps for Incorporation into Building Energy Analysis Calculation Methods" to develop improved calculation methods that permit more accurate comparison of standard air-source heat pumps and air conditioners with ground-source heat pumps.

Actual Outcomes:

1. Software and information were provided on the performance of zero ozone depletion potential refrigerants.
2. Air-source heat pumps.

- Version 1.0 was released of EPRI's ESPRE for Windows, which can be used to analyze building energy use as a function of technology.
- Version 3.0 was released of EPRI's Residential Desk Book, which offers a compendium of information of end-use residential technologies.
- Brochures were published on dual fuel heating and cooling, sealing heating and cooling systems, and repairing leaky ducts.
- A newsletter was published on heat pump developments, issues, and markets.
- Integrated heat pumps.
- Support was provided to the manufacturer of the PowerMiser integrated heat pump.
- A brochure was published on marketing integrated heat pumps
- A brochure was published on the Insider integrated heat pump.

3. EPRI assisted in the development of a comprehensive technician certification program, which merged the testing and certification programs of NATE, ACCA, and RSES.
4. Ground-source heat pumps (GSHPs).
   - A design and installation planning guide was published for GSHPs.
   - A directory was published of GSHP manufacturers and equipment.
   - EPRI hosted the 1999 GeoExchange Industry Conference and Exposition in Sacramento in September 1999.
5. A brochure was published on optimizing thermal distribution systems.
6. Detailed performance map data were collected on both air- and ground-source heat pumps for use in an upgraded analytical procedure to be used in California Title 24 residential building energy compliance evaluations. Several thousand performance maps were obtained, and recommendations were made on analytical procedure modifications.

Project Status:
The Commission's participation in this target ended as of December 31, 1999. Participation in the tailored collaboration ended December 2000.

Residential Thermal Distribution Systems

Contract #: 500-97-013 **Project #:** 2
Contractor: Regents - University of California
Subcontractors: Lawrence Berkeley National Laboratory : ConSol Consulting
Project Amount: $400,000
Contractor Project Manager: Karl Brown (510) 287-3330
Commission Contract Manager: Dale Trenschel (916) 654-4884
Status: Completed

Project Description:
The purpose of this project was to develop new knowledge and prototype technologies that would improve the energy-efficiency and performance of heating, ventilation and air conditioning (HVAC) equipment in residential buildings. The work included developing and testing the effectiveness and durability of duct sealant technologies for use in residential buildings. New methods of measuring duct leakage were evaluated, and interactions between equipment sizing and the effectiveness of the distribution system to deliver cooling throughout a home were analyzed. A significant issue investigated was the ability of downsized equipment and good distribution systems to deliver the same cooling benefits as larger, typical HVAC systems, but at a lower cost to the consumer.

This project supports the PIER Program objective of:

- Improving the energy cost/value of California's electricity by providing information, tools and products to reduce HVAC energy consumption in residential buildings. Specifically, this project will develop new procedures to evaluate the longevity of sealants used on residential HVAC ducts and new test methods for measuring energy losses through duct leakage. These results make possible the reduction of electricity for home heating and cooling use in residential HVAC systems through better duct sealing measures, reduced equipment sizing and improved diagnostics.

Proposed Outcomes:

1. Improve duct leakage test methods.
2. Update the American Society for Testing and Materials (ASTM) Standard E1554 – Determining External Air Leakage of Air Distribution Systems by Fan Pressurization.
3. Develop and introduce a draft ASTM standard for longevity testing of duct sealants.
4. Measure the performance of residential cooling equipment and associated distribution systems.
5. Compare the REGCAP simulation model to the measured field data.
6. Provide technical support to the Energy Commission for updating the Low-Rise Residential Alternative Calculation Method Approval Manual for 1998 Energy Efficiency Standards for Low-Rise Residential Buildings (CEC 1999) and Procedures for HVAC System Design and Installation (for HERS).
7. Support ASHRAE, ASTM and U.S. EPA duct leakage research and interface with projects funded by other agencies.

Actual Outcomes:

1. This investigation yielded a new duct leakage test called DeltaQ.
2. The existing ASTM Standard (E1554) for measuring duct leakage has been rewritten and submitted to the ASTM standards review process.
3. A draft ASTM standard for longevity testing of duct sealants was developed. A draft was submitted to ASTM subcommittee E06.41 for balloting and comment. The comments on the draft resulted in changes to the test method and apparatus. A new test apparatus was constructed with funding from the U.S. DOE.
4. Simulations of summer temperature pulldown time have shown that duct system improvements can be combined with equipment downsizing to save first cost, energy consumption, and peak power and still provide equivalent or superior comfort.

5. Air conditioner name plate capacity ratings alone are a poor indicator of how much cooling will actually be delivered to the conditioned space. Duct system efficiency can have as large an impact on performance as variations in Seasonal Energy Efficiency Ratio (SEER). Installing high SEER units can reduce energy consumption with no apparent drawbacks.
6. Duct efficiency calculations are included in the Low-Rise Residential Alternative Calculation Method Approval Manual for 1998 Energy Efficiency Standards for Low-Rise Residential Buildings (CEC 1999).
7. Procedures for HVAC System Design and Installation (for Home Energy Raters) have been updated.
8. Field-testing has shown that standard flowhoods can be poor for measuring residential register flows.

Project Status:
The project has been completed.

BLDGS Projects Completed in 1999

Improve C/E of Building Control Systems

Contract #: 500-97-010 **Project #:** 3
Contractor: Pacific Gas and Electric Company
Project Amount: $250,000
Contractor Project Manager: Steven Blanc (925) 866-5570
Commission Contract Manager: Joseph Wang (916) 654-4026
Status: Completed

Project Description:
The purpose of this project was to investigate methods to reduce the costs of current energy-management systems, such as low-cost building control systems and sensors. Energy management systems allow utility customers to monitor and control their energy consumption and improve the energy-efficiency of the whole building.

This project supports the PIER Program objective of:

- Improving the energy cost/value of California's electricity by providing utility customers with tools that could help reduce their energy consumption.

Proposed Outcomes:

1. Develop a method for determining the accuracy and storage frequency needed for various data acquisition functions in commercial HVAC systems.
2. Specify the use of economics (costs versus benefits) and operating needs to determine accuracy and storage frequency for data collected from commercial HVAC systems.

Actual Outcomes:

1. PG&E developed a method for determining the accuracy and storage frequency required for various data acquisition functions in commercial HVAC systems.
2. PG&E demonstrated the method on an example building under two different weather profiles (focusing on the air-handling equipment and chilled water temperature) and showed the potential benefits when more accurate equipment and better diagnostic techniques are used.
3. PG&E repeated the analysis on several other building types and sizes using a different energy simulation model. The result is a range of recommended measurements, storage frequencies, and potential energy savings for buildings with different annual energy uses.

Project Status:
The project has been completed.

Industrial-Agricultural-Water End-Use Energy Efficiency (IAW) Multi-Year Projects Started in 2005

Assessing Risks and Benefits of Drinking Water Utility Energy Management Practices

The Problem	A water utility that does not understand and manage its interface with the energy sector is putting its customers at risk. Public health and safety, system reliability, and prudent cost management are all dependent on how well a water utility manages its energy demands and power supply options. Water utilities can try to shave costs and help manage area-wide energy consumption, but doing so may imperil public health and safety. The trade-off between energy savings and health and environmental risks needs to be better understood to maximize energy savings without undo risk to public health and safety.
Proposed Research	The objective of the project is to develop, demonstrate, and convey a practical risk-benefit decision framework to 1) enable water utilities to identify and assess the risks and benefits of a broad array of energy management options including both energy supply and energy demand alternatives; and to 2) apply practical risk management tools to help them select, explain, and implement suitable energy management and risk mitigation practices.
Research Justification and Goals	Supports California's goal to identify opportunities and support programs to reduce electricity demand related to the water supply system during peak hours and opportunities to reduce the energy needed to operate water conveyance and treatment systems per the Energy Action Plan 2005; and to pursue all cost-effective load management and demand response programs on California's water systems per the Integrated Energy Policy Report Update 2004 by: • Developing, demonstrating and conveying a practical risk-benefit decision framework. • Identifying the most important types of energy management issues and strategies.
Contractor	American Water Works Assoc Research Foundation
PIER Manager	Paul Roggensack

This project is being conducted by the California Energy Commission's Public Interest Energy Research (PIER) program. PIER supports energy research and development that improves the quality of life in California by bringing environmentally safe, affordable, and reliable energy services and products to the marketplace.

Demonstration of a Low Energy Seawater Desalination Process

The Problem	Energy consumption in seawater reverse osmosis (SWRO) desalination technology has come a long way from consuming 20 kWh/m3 of electricity to as low as 2.0 kWh/m3 (7.6 kWh/1,000 gal or 2,467 kWh/AF) today. These gains are largely achieved by the higher efficiencies of the new energy recovery technologies. However, further improvements in energy consumption are possible by combining advanced membranes, energy recovery devices, and the most efficient pumping technologies.
Proposed Research	This project will demonstrate that using today's high efficiency pumping and energy recovery technologies, seawater reverse osmosis (SWRO) desalination is technicallly and economically a viable option for producing potable and irrigation water.
Research Justification and Goals	Supports California's goal to identify opportunities and support programs to reduce electricity demand related to the water supply system during peak hours and opportunities to reduce the energy needed to operate water conveyance and treatment systems per the Energy Action Plan 2005 by: • Demonstrating that seawater reverse osmosis desalination can be performed at 1.7 kWh/m3 as compared to 2.0 kWh/m3.
Contractor	West Basin Municipal Water District
Site Location	Port Hueneme, CA
PIER Manager	Shahid Chaudhry

This project is being conducted by the California Energy Commission's Public Interest Energy Research (PIER) program. PIER supports energy research and development that improves the quality of life in California by bringing environmentally safe, affordable, and reliable energy services and products to the marketplace.

Evaluation of the Dynamic Energy Consumption of Advanced Water and Wastewater Treatment Technologies

The Problem	Regulatory pressure to meet high clean water standards and waste discharge requirements has caused water and wastewater utilities to employ advanced treatment technologies including ozone treatment, UV disinfection, reverse osmosis, nanofiltration and electrodialysis. These technologies require intense energy which can affect a water utility's reliability and ability to meet water standards.
Proposed Research	This project has three objectives. The first objective is to quantify the actual and theoretical energy consumption of selected water and wastewater advanced treatment technologies. The second objective is to evaluate the factors that affect energy consumption. The third objective is to identify energy optimization opportunities in selected treatment technologies while maintaining treatment performance.
Research Justification and Goals	Supports California's goal to identify opportunities and support programs to reduce electricity demand related to the water supply system during peak hours and opportunities to reduce the energy needed to operate water conveyance and treatment systems per the Energy Action Plan 2005; and to pursue all cost-effective load management and demand response programs on California's water systems per the Integrated Energy Policy Report Update 2004 by: • Minimizing the energy used for advanced treatment technologies. • Lowering demand on the electrical grid from water and wastewater utilities.
Contractor	American Water Works Assoc Research Foundation
PIER Manager	Paul Roggensack

This project is being conducted by the California Energy Commission's Public Interest Energy Research (PIER) program. PIER supports energy research and development that improves the quality of life in California by bringing environmentally safe, affordable, and reliable energy services and products to the marketplace.

Flywheel Energy Storage System (FESS) for Grid Frequency Regulation

The Problem	To maintain a constant frequency on the California electric grid (60 Hz), the California Independent System Operator must constantly balance the supply of power generated with the varying demand (load). This balance is maintained today by frequent small adjustments to the output of some of the generators operating on the grid. This process is inefficient, increases maintenance costs and results in keeping older power plants operating to meet California's electricity needs. The use of energy storage technology offers the opportunity to provide this frequency regulation service with a cleaner, non-fossil fuel, more efficient and more flexible power source.
Proposed Research	The purpose of this project is to demonstrate the ability of an electricity energy storage medium (flywheel technology) to cost-effectively meet the California Independent System Operator requirement of securing frequency regulation service. This service requires the ability to react in real-time to frequent imbalance in demand and supply of electric generation. When a storage technology is used for this application, it can store energy instantaneously when generation exceeds loads and discharge energy instantaneously when load exceeds generation. This demonstration project uses a scaled down size flywheel matrix system to minimize project cost while still completing the desired technical performance assessments.
Research Results	The Department of Energy in collaboration with the California Energy Commission and Beacon Matrix Services is hosting a public web site where the results from the field demonstrations of the Beacon flywheel system can be reviewed. This site will be active for all of 2006. For detailed information and the latest results of this project go to:
Research Justification and Goals	Supports California's goal to provide for the continued operation of cost-effective and environmentally – sound existing generation needed to meet current reliability needs, including combined heat and power generation per the Energy Action Plan 2005; and to promote clean, small generation resources located at load centers per the Energy Action Plan 2003 by: • Assessing the economic benefits of using electric energy storage technology to replace power plant generator responses for grid system frequency services. • Demonstrating (on a reduced scale) the ability of an energy storage technology to properly respond to California Independent System Operator real time grid frequency signals. • Improving the reliability, quality and sufficiency of California's electricity by demonstrating an alternative method of regulating frequency compared to the existing practice of cycling generators. This project also addresses Public Resources Codes 25620.1.(c)(2).
Contractor	Beacon Matrix Services
Site Location	San Ramon, CA
PIER Manager	Mike Gravely

This project is being conducted by the California Energy Commission's Public Interest Energy Research (PIER) program. PIER supports energy research and development that improves the quality of life in California by bringing environmentally safe, affordable, and reliable energy services and products to the marketplace.

Water Consumption Forecasting to Improve Energy Efficiency of Pumping Operations

The Problem	Water utilities must determine water demand on a short-term basis to meet customer needs. Water demand determines a utility's energy needs. Utilities currently lack the tools needed to make accurate forecasts of water demand. This inability to accurately determine water demand can result in excess pumping costs and energy waste.
Proposed Research	The objective of this project is to provide water utilities the best available options for short term water consumption forecasting. The project will provide information on various techniques, performance data, benchmarks, selection criteria, and functional requirements to assist utilities in evaluating and selecting the best forecasting techniques.
Research Justification and Goals	Supports California's goal to identify opportunities and support programs to reduce electricity demand related to the water supply system during peak hours and opportunities to reduce the energy needed to operate water conveyance and treatment systems per the Energy Action Plan 2005; and to pursue all cost-effective load management and demand response programs on California's water systems per the Integrated Energy Policy Report Update 2004 by: • Minimizing the energy used for pumps at water utilities. • Lowering demand on the electrical grid from water utilities.
Contractor	American Water Works Assoc Research Foundation
Site Location	Project work is being conducted at various locations throughout California.
PIER Manager	Paul Roggensack

This project is being conducted by the California Energy Commission's Public Interest Energy Research (PIER) program. PIER supports energy research and development that improves the quality of life in California by bringing environmentally safe, affordable, and reliable energy services and products to the marketplace.

IAW Active Projects from Previous Years

Decreasing Electric Demand in California Oilfield Operations by Reducing Excess Water Production

The Problem	California oil and gas producers produce 2.1 billion barrels of associated water for 271 million barrels of oil per year (a water:oil ratio of almost 8:1). The excess water produced may be reduced using technologies that are best suited for the conditions commonly found in California wells. A reduction would result in a significant drop in electricity usage associated with producing excess water, and reduce loads on the distribution lines supplying oil and gas fields.
Proposed Research	The purpose of this project is to develop a methodology for oilfield producers that will allow them to assess particular geologic and wellbore conditions in California wells and then select corrective measures to reduce water production. Reduced water production will reduce electric consumption leading to better economics for oilfield operations.
Research Justification and Goals	Adds a project to the Commissions research portfolio that addresses key technical and scientific barriers as mandated by the Warren-Alquist Act by: • Identifying applicable techniques and demonstrating that these techniques can save energy by reducing the water associated with oil production by half. • Reducing water production and the associated electric consumption, in which will lead to better economics for the oilfield operations in California.
Contractor	Petroleum Technology Transfer Council
Site Location	Los Angeles, CA
PIER Manager	Tony Wong

This project is being conducted by the California Energy Commission's Public Interest Energy Research (PIER) program. PIER supports energy research and development that improves the quality of life in California by bringing environmentally safe, affordable, and reliable energy services and products to the marketplace.

Demand Response Analysis and Tool Development for IAW End Users

The Problem	Understanding how industrial and agricultural end use customers make business decisions to participate or not in future demand response (DR) programs or tariffs is critical for understanding the true potential of DR programs or tariffs for California. Results from statewide DR pilots and other utility DR programs indicate that these industrial and agricultural end use customers need additional information and analytical tools to assist them in determining the business impact of a proposed DR program or tariff.
Proposed Research	This project will complete research to develop a better understanding of the decision factors industrial and agricultural end users apply when determining if they will participate or not in future demand response (DR) tariffs and initiatives. Detailed interviews with industrial and agricultural end user energy managers will be completed. An analytical tool will be developed that will aid these energy managers in better understanding the business impacts on their operations from participating in DR tariffs or programs. The results of these efforts will be analyzed so that common business DR characteristics and traits can be identified.
Research Justification and Goals	Supports California's goal to identify and adopt new programs and revise current programs as necessary to achieve the goal to meet five percent demand response by 2007 and to make dynamic pricing tariffs available for all customers per the Energy Action Plan 2005; and to expedite decisions on dynamic pricing tariffs to allow increased participation for summer 2006 for customers with installed advanced metering systems and encourage load shifting that does not result in increases in overall consumption per the Energy Action Plan 2005 by: • Developing information and analytical tools to assist California businesses in evaluating the financial impact of participating in future demand response programs and tariffs. • Completing research into how industrial and agricultural businesses in California can participate more actively in future demand response programs and tariffs.
Contractor	Electric Power Research Institute (EPRI)
PIER Manager	Mike Gravely

This project is being conducted by the California Energy Commission's Public Interest Energy Research (PIER) program. PIER supports energy research and development that improves the quality of life in California by bringing environmentally safe, affordable, and reliable energy services and products to the marketplace.

Demand Response Database

The Problem	For the California to meet the identified need for building an infrastructure for demand response programs, it is critical to understand all the elements of how end-use customers select and respond to individual demand response programs. Encouraging end-use customers to modify their electrical load based on the demand of the electrical grid has the potential of providing significant improvements in electric system reliability and stability. Development of a consistent, comprehensive, time-stamped database of end-use customer participation in demand response programs is crucial to understanding customer actions and achieving the State's goals in Demand Response.
Proposed Research	This project will identify the key data elements that should be collected and stored to fully analyze and understand how the large California industrial, commercial and agricultural end use customers (more than 200kW load) responded to 2003 and 2004 demand response programs and tariffs. The program will develop and deliver a data collection format and storage capability specifically designed to provide researchers the information necessary to develop a better understanding. It will also make recommendations on how California utilities can increase the number of end use customers participating in current and future demand response tariffs and programs.
Research Justification and Goals	Supports California's goal to identify and adopt new programs and revise current programs as necessary to achieve the goal to meet five percent demand response by 2007 and to make dynamic pricing tariffs available for all customers per the Energy Action Plan 2005; and to expedite decisions on dynamic pricing tariffs to allow increased participation for summer 2006 for customers with installed advanced metering systems and encourage load shifting that does not result in increases in overall consumption per the Energy Action Plan 2005 by: • Developing a data storage system capable of supporting a broad range of research into the actual demand response (DR) performance of California industrial/commercial customers. • Identifying recommended data collection elements that will provide insight into the demand response load shedding performance of commercial, industrial and agricultural end use customers.
Contractor	Electric Power Research Institute (EPRI)
PIER Manager	Mike Gravely

This project is being conducted by the California Energy Commission's Public Interest Energy Research (PIER) program. PIER supports energy research and development that improves the quality of life in California by bringing environmentally safe, affordable, and reliable energy services and products to the marketplace.

Demonstration of Energy Efficient Ultra Low NOx Burner (ULNB) Control Technology

The Problem	The electrical energy consumption of boilers has increased drastically due to more stringent environmental regulations. Typically, today's 9 parts per million (ppm) ultra low nitrogen oxides (NOx) burners require over twice the fan power, thus more electricity, then was required by 30 ppm low NOx burners. The common method for reducing NOx emissions is to add excess ambient air (EAA) air or flue gas recirculation (FGR) to the burner. Alzeta Corporation will develop a new NOx control method utilizing smaller fans sized to add excess ambient air. This method is expected to reduce electricity consumption by 25%.
Proposed Research	This project will demonstrate a new NOx control method for an ultra-low NOx burner (UNLB) for boilers that will reduce the burner's electrical power consumption by 25%.
Research Justification and Goals	Adds a project to the Commissions research portfolio that emphasizes innovative energy supply and end use technologies, focusing on their reliability, affordability, and environmental attributes as mandated by the Warren-Alquist Act; and supports California's goal to optimize energy conservation and resource efficiency per the Energy Action Plan 2003 by: • Converting two industrial boilers to demonstrate a new NOx (nitrogen oxides) control technology. • Developing a NOx control strategy for an ultra low NOx burner (ULNB) that will use 25% less electrical energy. This project also addresses Emphasize innovative energy supply and end-use technologies, focusing on their reliability, affordability and environmental benefits..
Contractor	Alzeta Corporation
Site Location	Santa Clara, CA
PIER Manager	Rajesh Kapoor

This project is being conducted by the California Energy Commission's Public Interest Energy Research (PIER) program. PIER supports energy research and development that improves the quality of life in California by bringing environmentally safe, affordable, and reliable energy services and products to the marketplace.

Development and Demonstration of Digital System for Control and Monitoring of Oxygen Transfer Efficiency Measurements

The Problem	All waste water treatment plants require aeration to reduce the harmful bacteria from the waste water by bubbling oxygen through sludge. This step is very energy intensive. More oxygen than necessary often results in wasted electricity, thus fine tuning of the system to deliver just the right amount of aeration can save energy. Since this process of fine tuning is time consuming and expensive it is often conducted infrequently, resulting in excess electricity use. Developing a technology with a near-term market application that could substantially reduce cost and manpower for routine monitoring of wastewater aeration performance should save energy.
Proposed Research	This project will involve the development and demonstration of a new portable, lightweight, digital automated system for the accurate monitoring and control of the oxygen transfer efficiency (OTE) measurements in the wastewater treatment industry. This new small and light-weight equipment will encourage activated sludge wastewater treatment facilities to conduct OTE measurements in-house on a regular basis with minimal technical expertise. This, in return, will result in reduced energy consumption for aeration and decrease the operating costs of wastewater treatment plants in California.
Research Justification and Goals	Supports California's goal to pursue all cost-effective load management and demand response programs on California's water systems per the Integrated Energy Policy Report Update 2004; and to identify opportunities and support programs to reduce electricity demand related to the water supply system during peak hours and opportunities to reduce the energy needed to operate water conveyance and treatment systems per the Energy Action Plan 2005 by: • Developing a technology with a near-term market application that could substantially reduce cost and manpower for routine monitoring of wastewater aeration performance.
Contractor	Southern California Edison
Site Location	Irwindale, CA
PIER Manager	Shahid Chaudhry

This project is being conducted by the California Energy Commission's Public Interest Energy Research (PIER) program. PIER supports energy research and development that improves the quality of life in California by bringing environmentally safe, affordable, and reliable energy services and products to the marketplace.

Development of a Utility Energy Index to Assist in Benchmarking of Energy Management for Water and Wastewater Utilities

The Problem	Waste water and water treatment processes are very energy intensive and are becoming more so due to increased health and environmental related regulations. Water and wastewater utilities do not have benchmark metrics with which to evaluate the energy efficiency performance of their utility processes. There is no way to compare between utilities' energy consumption that accounts for process variables such as gallons of water produced or treated, sources of water utilized (surface or ground water), disinfection methods, capacity factors, secondary and tertiary treatment types, etc.
Proposed Research	The project will produce industry-wide energy performance metrics to describe the performance of water and wastewater utilities, which will subsequently be incorporated within a comparison framework (benchmarking tool) to facilitate internal and external comparisons within and among utilities.
Research Justification and Goals	Supports California's goal to identify opportunities and support programs to reduce electricity demand related to the water supply system during peak hours and opportunities to reduce the energy needed to operate water conveyance and treatment systems per the Energy Action Plan 2005; and to pursue all cost-effective load management and demand response programs on California's water systems per the Integrated Energy Policy Report Update 2004 by: • Helping water utilities improve the efficiency of their use of water consumption and treatment. • Using less energy to provide and treat water. • Helping provide low-cost clean water.
Contractor	American Water Works Assoc Research Foundation
PIER Manager	Paul Roggensack

This project is being conducted by the California Energy Commission's Public Interest Energy Research (PIER) program. PIER supports energy research and development that improves the quality of life in California by bringing environmentally safe, affordable, and reliable energy services and products to the marketplace.

Development of an Ultracapacitor-Based Stabilizing System for Generators in Industrial and Commercial Facilities

The Problem	Many California industrial and commercial facilities have installed generation on their site to improve their power reliability. These distributed generation systems also can provide new energy service options to California's electric grid. However many of these systems are not able to keep up with the changing electrical load when a disturbance occurs and the results can negatively impact the entire utility network. As a result, on-site generators are often oversized to handle the transient loads. This oversizing results in reduced energy efficiency and increased system costs.
Proposed Research	This effort will produce a functional specification for a dynamic stabilizer system that can provide bridging power and voltage stabilization so that step load changes can be accommodated without over sizing the generator. By providing this load following capability, the dynamic stabilizer will reduce the costs of distributed generation, improve power quality, provide increased utility network options and increase industrial and commercial productivity. An actual future field demonstration of this dynamic stabilizer will be completed under a separate contract.
Research Justification and Goals	Supports California's goal to promote customer and utility owned distributed generation per the Energy Action Plan 2003; and to meet the needs for new generation first with renewable energy resources and distributed generation per the Energy Action Plan 2003 by: • Producing a functional specification for a dynamic stabilizer system. • Providing new energy options to industrial and commercial end use customers to meet their power reliability needs while also providing distributed generation assets to California's electric grid. • Reducing electrical inefficiency associated with oversized field distributed generation equipment.
Contractor	Electric Power Research Institute (EPRI)
PIER Manager	Mike Gravely

This project is being conducted by the California Energy Commission's Public Interest Energy Research (PIER) program. PIER supports energy research and development that improves the quality of life in California by bringing environmentally safe, affordable, and reliable energy services and products to the marketplace.

Electrodialysis Systems for Tartrate Stabilization of Wine

The Problem	Tartrates of potassium and calcium occur naturally in grapes at near saturation levels and tend to precipitate in wines during storage. Tartrate stabilization methods reduce the concentration of these salts and prevent precipitation. The primary method of tartrate stabilization is energy-intensive refrigeration (cold storage) conservatively estimated to consume 70 kWh per thousand gallons (kgal) of wine. Electrodialysis is an electrically driven membrane process that separates tartrates from wines. The electricity consumption in electrodialysis is estimated at 12 kWh per kgal an approximately 80% electricity saving. To gain industry wide acceptance, a demonstration of its benefits and reliability now needs to be performed.
Proposed Research	This project will demonstrate the use of electrodialysis for tartrate stabilization in wine. It will show the wine industry that this method of stabilization is a reliable energy saving alternative to conventional cold stabilization technology.
Research Justification and Goals	Supports California's goal to expand efforts to improve public awareness and adoption of energy efficiency measures per the Energy Action Plan 2005; and to meet its energy growth needs while optimizing resource efficiency per the Energy Action Plan 2003 by: • Demonstrating tartrate stabilization of wines by electrodialysis using a mobile 600 gal/hour unit at several wineries. • Installing & testing a stationary 1600 gal/hour electrodialysis unit at one winery.
Contractor	Winesecrets, Inc.
Site Location	Napa, CA
PIER Manager	Rajesh Kapoor

This project is being conducted by the California Energy Commission's Public Interest Energy Research (PIER) program. PIER supports energy research and development that improves the quality of life in California by bringing environmentally safe, affordable, and reliable energy services and products to the marketplace.

Energy Efficient Agricultural Technologies

The Problem	Agricultural production is an energy intensive activity that demands electricity for the pumping and distribution of water as well as the cleaning, processing, storage and cooling of commodities. To produce crops farmers also utilize diesel fuel, propane and natural gas, as well as the energy embeded in fertilizers, pesticides and other agricultural chemicals. Between 10 to 20 percent of total production costs are allocated to supply direct and indirect energy sources. Farmers and animal production companies rely on their ability to be resource efficient to maximize their profit margins. They are in need of energy efficient equipment to reduce production costs.
Proposed Research	This contract advances the development of energy efficient agricultural technologies. Funded projects, include: 1. Demonstration of ozone in fruit and vegetable packing, storage operations; 2. Evaluation of ozone as air-borne fumigant to control insects; 3. Testing commercial efficacy of ozone for soil treatment; 4. Characterization of changes to physical properties of soils following injection of ozone; 5. Demonstration of techniques of plant, soil, and atmospheric-based irrigation scheduling for orchard and vineyard crops; 6. Demonstration of energy efficient, integrated wastewater management system for livestock operations; 7. Development of a soil compaction and moisture profile sensor; 8. Demonstration of energy efficient refrigeration technologies.
Research Results	1. Ozone in fruit and vegetable packing and storage operations advanced the adoption of this technology; 2. Ozone as air-borne fumigant discovered limitations for this application; 3.There is no commercial efficacy of ozone for soil treatment; 4. Some negatives impacts on soils followed injection of ozone; 5. New techniques of plant, soil, and atmospheric-based irrigation scheduling for orchard and vineyard crops have been adopted; 6. Energy efficient, integrated wastewater management systems for livestock operations has yet to become a reality; 7. A soil compaction and moisture profile sensor was patented; 8. A new RFP will be released to identify energy efficient refrigeration technologies.
Research Justification and Goals	Supports California's goal to optimize all strategies for increasing conservation and energy efficiency to minimize increases in electricity and natural gas demand per the Energy Action Plan 2003; and to transform RD&D projects on energy efficiency technologies into energy efficiency tools and standards per the Energy Action Plan 2005 by: • Increasing the efficiency of emerging electro-technology applications in agriculture. • Replacing toxic chemicals used in agribusiness with cleaner electro-technologies.
Contractor	The Regents of the University of California - Davis
Site Location	Davis, CA
PIER Manager	Ricardo Amon

This project is being conducted by the California Energy Commission's Public Interest Energy Research (PIER) program. PIER supports energy research and development that improves the quality of life in California by bringing environmentally safe, affordable, and reliable energy services and products to the marketplace.

Energy Efficient Arsenic Removal from California Drinking Waters

The Problem	Currently, the average cost of lowering arsenic from 50 parts per billion (ppb) to 10 ppb from drinking water is in the range of $58 to $237 per household per year which is expensive. Lawrence Berkeley National Laboratory (LBNL) has developed an innovative medium which will lower the arsenic removal cost from 50 ppb to 10 ppb to $1 per household per year assuming that the daily household water consumption is 2200 liters (580 gallons).
Proposed Research	This project addresses the need of new technologies to meet the new and more stringent arsenic standards. This need was identified in the Commission and American Water Works Association Research Foundation's (AwwaRF) roadmap under ATP, one of the eight primary research areas representing potentially high yields in terms of energy savings and economic value. Lawrence Berkeley National Laboratory (LBNL) will refine and demonstrate a new energy efficient and cost effective arsenic removal process under this project.
Research Justification and Goals	Supports California's goal to identify opportunities and support programs to reduce electricity demand related to the water supply system during peak hours and opportunities to reduce the energy needed to operate water conveyance and treatment systems per the Energy Action Plan 2005 by: • Demonstrating that the LBNL's newly developed process to reduce arsenic from 50 ppb to 10 ppb in drinking waters is - Very cost effective -- Less than $1 per household per year (capital and operating costs) vs. existing $58 -- $327 per household per year; - Very energy efficient -- saves 1,600,000 kWh of electricity per year as compared to existing arsenic removal methods assuming water supply for 630,000 people at 100 gpd/person; - Will potentially reduce disposal costs associated with removing arsenic from water supplies to meet the new EPA limit of 10 ppb, down from the current 50 ppb.
Contractor	Department of Energy, Lawrence Berkeley National Laboratory
Site Location	Berkeley, CA
PIER Manager	Shahid Chaudhry

This project is being conducted by the California Energy Commission's Public Interest Energy Research (PIER) program. PIER supports energy research and development that improves the quality of life in California by bringing environmentally safe, affordable, and reliable energy services and products to the marketplace.

High-Performance High-Tech Buildings/Laboratories, Cleanrooms, and Data Centers Project

The Problem	California's economy is highly dependent on the business involved in information technology, electronics manufacturing and biotechnology. These sectors need data centers, clean rooms and environmentally safe laboratories. Energy use in laboratories, cleanrooms and data centers is increasing due to the rise in large networking centers and the need for environmental compliance. Twenty-nine percent of the nation's cleanrooms are located in California. Lawrence Berkeley National Laboratory (LBNL) estimates that 9.4 billion kWh of electricity and 25 trillion Btus of natural gas are being consumed every year in California cleanroom and laboratory facilities, and that California's data centers use 657 GWh of electricity per year.
Proposed Research	The purpose of this project with Lawrence Berkeley National Laboratory (LBNL) is to research and develop energy efficiency technologies for laboratories, cleanrooms and data centers to reduce their electricity and natural gas use.
Research Justification and Goals	Adds a project to the Commissions research portfolio that emphasizes innovative energy supply and end use technologies, focusing on their reliability, affordability, and environmental attributes as mandated by the Warren-Alquist Act by: • Assessing the energy efficiency of laboratories, cleanrooms and datacenters. • Providing research for the development of energy efficiency technologies for laboratories, cleanrooms and data centers.
Contractor	Department of Energy, Lawrence Berkeley National Laboratory
PIER Manager	Paul Roggensack

This project is being conducted by the California Energy Commission's Public Interest Energy Research (PIER) program. PIER supports energy research and development that improves the quality of life in California by bringing environmentally safe, affordable, and reliable energy services and products to the marketplace.

Infrared Drying of Rice to Improve Energy Efficiency and Disinfestation

The Problem	Conventional rice drying requires circulating large volumes of hot air through layers of grain. This process depends on convection to transfer heat from hot air to the grain surface, and conduction to transfer heat to the interior of the grain. Alternatively, the infrared process heats both the surface and interior of the grain by radiation faster and more effectively. Research needs to be performed to establish optimum operating parameters and test how effectively infrared technology eliminates pests and reduces microbial counts.
Proposed Research	The purpose of this project is to develop and demonstrate a flameless catalytic (FCG) infrared dryer and a selective wavelength (PSW) infrared dryer for the purposes of eventually replacing more energy intensive natural gas dryers for the drying of California rice. Research will establish optimum operating parameters and test how effectively infrared technology eliminates pests and reduces microbial counts.
Research Justification and Goals	Supports California's goal to optimize all strategies for increasing conservation and energy efficiency to minimize increases in electricity and natural gas demand per the Energy Action Plan 2003; and to standardize and increase the evaluation and monitoring of energy efficiency programs to ensure that savings and benefits are being delivered.per the Integrated Energy Policy Report 2003 by: • Evaluating rice drying characteristics and energy savings potential of (FCG) infrared dryer and a selective wavelength (PSW) infrared dryer. • Evaluating the energy savings and pest elimination effectiveness of FCG and PSW infrared dryers.
Contractor	The Regents of the University of California - Davis
Site Location	Davis, CA
PIER Manager	Rajesh Kapoor

This project is being conducted by the California Energy Commission's Public Interest Energy Research (PIER) program. PIER supports energy research and development that improves the quality of life in California by bringing environmentally safe, affordable, and reliable energy services and products to the marketplace.

Metropolitan Water District of Southern California

The Problem	California's water needs are growing requiring several non-traditional water sources to meet its current and future water demands. The current water needs for Southern California are provided from the Colorado River and Sacramento-San Joaquin Bay Delta, both of which are very energy intensive operations. Further, water supply from the Colorado River is being curtailed, forcing California to reduce its dependence on imported water. Indigenous brackish and saline water sources require treatments that are very energy intensive. Therefore, to meet the future water needs, new water and wastewater treatment technologies need to be researched, developed, demonstrated, and deployed.
Proposed Research	The purpose of this project is to co-fund the full-scale demonstration and refinement of newly developed electro-technologies for producing potable and non-potable water. These technologies remove salinity and disinfect various sources of water (e.g., Colorado River water, brackish ground water, municipal wastewater, and agricultural drainage water). The proposed research is a follow on project to earlier research funded with PIER Transition funding ($410,000- 1997) and PIER I funding ($1,200,000- 1998) in collaboration with the Metropolitan Water District.
Research Justification and Goals	Supports California's goal to identify opportunities and support programs to reduce electricity demand related to the water supply system during peak hours and opportunities to reduce the energy needed to operate water conveyance and treatment systems per the Energy Action Plan 2005; and to pursue all cost-effective load management and demand response programs on California's water systems per the Integrated Energy Policy Report Update 2004 by: • Providing energy savings of approximately 12 GWh in avoided water transport and production of high-quality potable water. • Producing an additional 7 million acre feet of water with savings of $140 million from developing local water supplies, reducing pumping costs and energy usage. • Avoiding approximately $500 million of salinity damages.
Contractor	Metropolitan Water District of Southern California
Site Location	La Vern, CA
PIER Manager	Shahid Chaudhry

This project is being conducted by the California Energy Commission's Public Interest Energy Research (PIER) program. PIER supports energy research and development that improves the quality of life in California by bringing environmentally safe, affordable, and reliable energy services and products to the marketplace.

Oil-Field Flare Gases Electricity Project (Offgases)

The Problem	Oil well sites must either flare or re-inject shut-in gas to maintain production. Shut-in gas is a viable energy source that cannot be utilized because it does not meet natural gas pipeline specifications, or because there is no pipeline in close proximity to the oil well. The shut-in gases also do not meet fuel specifications for microturbines and other distributed generation options because of impurities, liquid content, and heat content. Cleaning of these otherwise unusable gases to make them usable for distributed generation purposes would add to the electricity generation capacity in California.
Proposed Research	The purpose of this project is to select four oil wells for demonstrations that will address a wide range of technical difficulties for implementing distributed generation using shut-in gas. Each demonstration will utilize existing technologies to condition the shut-in gas to meet fuel specifications for distributed generation. The four oil wells will be selected for heat content to cover the entire range of shut-in gases.
Research Justification and Goals	Adds a project to the Commissions research portfolio that addresses key technical and scientific barriers as mandated by the Warren-Alquist Act; and supports California's goal to enable consumers and businesses to supply their own generation through the deployment of distributed generation and cogeneration per the Integrated Energy Policy Report 2003 by: • Converting shut-in gases at oil well sites into a usable energy source for distributed generation.
Contractor	California Oil Producer's Electricity Cooperative
Site Location	Project work is being conducted at various locations throughout California.
PIER Manager	Paul Roggensack

This project is being conducted by the California Energy Commission's Public Interest Energy Research (PIER) program. PIER supports energy research and development that improves the quality of life in California by bringing environmentally safe, affordable, and reliable energy services and products to the marketplace.

PIER Agriculture Energy End Use Efficiency

The Problem	Conveyance, storage and on-farm use of water in California agriculture is very energy intensive. Increased use of micro-irrigation to conserve water and the prevailing methods for the control and scheduling of surface water to farmers results in higher electricity use. Until the infrastructure needs of the irrigation districts are adequately addressed, sophisticated on-farm water conserving irrigation technologies such as precise irrigation scheduling, fertigation and automated irrigation systems will not be widely adopted.
Proposed Research	The purpose of this project is to improve irrigation districts' ability to deliver water to farms, resulting in improved water deliveries that can accrue on-farm energy savings, reduced water use, improved resource efficiencies, and lower environmental impacts. The project will also develop specifications for installations of variable frequency drives (VFD) on agricultural pumps. The new specifications should have a direct impact on motor efficiency, the life of the motors and their electronic components, and the life and dependability of adjacent electronic equipment. These improvements should lead to a widespread adoption of VFD technologies, which will have a direct energy efficiency impact.
Research Results	The project improved irrigation district's ability to deliver water to farms, resulting in improved water deliveries, energy savings, reduced water use, improved resource efficiencies, and lower environmental impacts. The project also developed specifications for installations of variable frequency drives on agricultural pumps. The new specifications have had a direct impact on motor efficiency, the life of the motors and their electronic components, the life and dependability of adjacent electronic equipment. These improvements should lead to a widespread adoption of VFD (Variable Frequency Drive) technologies, which will have a direct energy efficiency impact.
Research Justification and Goals	Supports California's goal to identify opportunities and support programs to reduce electricity demand related to the water supply system during peak hours and opportunities to reduce the energy needed to operate water conveyance and treatment systems per the Energy Action Plan 2005; and to pursue all cost-effective load management and demand response programs on California's water systems per the Integrated Energy Policy Report Update 2004 by: • Increasing the efficiency of electricity consumed in the conveyance of water to farms to reduce the use of groundwater resources on farms. - Improve irrigation district infrastructure to deliver water using flexible schedules.
Publications	Irrigation District Observations on Large Diameter, Low Pressure Pipeline Materials ==>http://www.itrc.org/reports/concretepipe/concretepipe.htm
Contractor	California Polytechnic State University Foundation
Site Location	San Luis Obispo, CA
PIER Manager	Ricardo Amon

This project is being conducted by the California Energy Commission's Public Interest Energy Research (PIER) program. PIER supports energy research and development that improves the quality of life in California by bringing environmentally safe, affordable, and reliable energy services and products to the marketplace.

Topping Cycle Technology for Optimization of Can Cooker/Cooler Operation

The Problem	Processing of fruits/vegetables involves using steam for heating and electricity to drive the chillers. Steam is generated at pressures around 150 to 250 psi and the pressure is reduced by valves to about 50 psi for heating the retorts. This pressure reduction results in a tremendous loss of energy. In a topping cycle plant, steam pressure is reduced in a steam turbine while producing useful mechanical work and the exhaust steam is used for process heat. The efficiency of conversion of additional thermal energy to mechanical work results in substantial energy savings compared to a thermal power plant operating at around 40% efficiency.
Proposed Research	This project demonstrates a topping cycle at a canning plant in California to drive a refrigeration unit. High pressure steam will drive a steam turbine directly coupled to a chiller. Low pressure exhaust steam from the turbine will be used for process heating.
Research Justification and Goals	Supports California's goal to meet its energy growth needs while optimizing resource efficiency per the Energy Action Plan 2003; and to meet its energy growth needs while optimizing resource efficiency per the Energy Action Plan 2003 by: • Demonstrate a technology application that uses the waste energy cost-effectively to reduce electricity use . • Through this successful demonstration, encourage the food prcoessing industry, a major user of energy, to adopt a more energy efficient technology in its operation. This project also addresses Supports California's goal to meet its energy growth needs while optimizing resource efficiency per Energy Action Plan 2003..
Contractor	DelMonte Foods
Site Location	Modesto, CA
PIER Manager	Rajesh Kapoor

This project is being conducted by the California Energy Commission's Public Interest Energy Research (PIER) program. PIER supports energy research and development that improves the quality of life in California by bringing environmentally safe, affordable, and reliable energy services and products to the marketplace.

Water and Wastewater Energy Efficiency Roadmap

The Problem	Clean water at a low cost is essential to California's economy and continued prosperity. California needs to treat large quantities of water to meet both municipal and waste discharge requirements. These activities are heavily dependent on electricity. Water treatment facilities in California use four percent of all the electricity used in California and research needs to be done to increase the efficiency of these facilities.
Proposed Research	The purpose of this project is to develop a research, development, and demonstration (RD&D) plan to improve the energy efficiency of water and waste water treatment facilities. In addition, this project will prioritize and select RD&D projects that will be funded jointly by the American Water Works Association Research Foundation (AwwaRF) and the PIER program.
Research Justification and Goals	Supports California's goal to identify opportunities and support programs to reduce electricity demand related to the water supply system during peak hours and opportunities to reduce the energy needed to operate water conveyance and treatment systems per the Energy Action Plan 2005; and to pursue all cost-effective load management and demand response programs on California's water systems per the Integrated Energy Policy Report Update 2004 by: • Helping water utilities improve the efficiency of their use of water consumption and treatment. • Using less energy to provide and treat water. • Helping provide low-cost clean water. This project also addresses Public Resources Code 25620.1. ©(2).
Contractor	American Water Works Assoc Research Foundation
Site Location	Denver, CO
PIER Manager	Paul Roggensack

This project is being conducted by the California Energy Commission's Public Interest Energy Research (PIER) program. PIER supports energy research and development that improves the quality of life in California by bringing environmentally safe, affordable, and reliable energy services and products to the marketplace.

Zero Liquid Discharge and Volume Minimization for Inland Desalination

The Problem	Communities in rapidly growing inland regions of California that have fully allocated their fresh water sources increasingly must consider desalination of brackish water to meet future water demands and sustain economic growth. Coastal communities that use desalination can dispose of the waste concentrate by discharging into the ocean. However, this option is not available for non-coastal facilities, and the cost of disposal of the waste concentrate is prohibitive and threatens surface and groundwater sources.
Proposed Research	The research objective is to develop a treatment process that reduces the cost and energy consumption for inland desalination with zero liquid discharge (ZLD). The technical approach involves alternating applications of reverse osmosis (RO) with precipitation processes designed to remove the least soluble salts under conditions of controlled mixing, salt seeding, chemical addition, residence time, temperature and potential of hydrogen (pH). After removal of salts that limited recovery in the primary RO, brine is treated in a secondary RO for further product water recovery and brine volume reduction.
Research Justification and Goals	Supports California's goal to identify opportunities and support programs to reduce electricity demand related to the water supply system during peak hours and opportunities to reduce the energy needed to operate water conveyance and treatment systems per the Energy Action Plan 2005; and to pursue all cost-effective load management and demand response programs on California's water systems per the Integrated Energy Policy Report Update 2004 by: • Helping water utilities improve the efficiency of their use of brackish water and treatment. • Using less energy to provide and treat water. • Helping provide low-cost clean water.
Contractor	American Water Works Assoc Research Foundation
PIER Manager	Paul Roggensack

This project is being conducted by the California Energy Commission's Public Interest Energy Research (PIER) program. PIER supports energy research and development that improves the quality of life in California by bringing environmentally safe, affordable, and reliable energy services and products to the marketplace.

IAW Projects Completed in 2005

Development of an Integrated Benchmarking and Energy and Water Management Tool for the Wine Industry

The Problem	California has about 1,000 wineries and the industry uses about 406 million kWh of electricity and 23 million therms of natural gas annually. In addition to energy, between 2 to 6 gallons of water is used to produce one gallon of wine. Possibilities for energy and water savings in wineries can be identified if a winery can perform energy & utilities benchmarking studies and audits. Lack of knowledge and tools for benchmarking energy and water use is a barrier to finding energy and water savings opportunities at wineries in California.
Proposed Research	This project will develop an energy and water use benchmark and energy efficiency screening tool to help California wineries determine their level of energy and water efficiency. This process-based benchmarking tool will allow each winery to compare its efficiency to other wineries revealing possible areas of energy and water savings. The same tool can then be used to chart efficiency improvements at a single winery over time.
Research Results	The development of the benchmarking tool is complete. The BEST-Winery benchmarking tool and guidebook are made available for free downloading through the Lawrence Berkeley National Laboratory website:
Research Justification and Goals	Supports California's goal to meet its energy growth needs while optimizing resource efficiency per the Energy Action Plan 2003; and to optimize energy conservation and resource efficiency per the Energy Action Plan 2003 by: • Developing the BEST-Winery benchmarking tool and guidebook to increase energy and water efficiency at California wineries.
Publications	Development of an Integrated Benchmarking and Energy and Water Management Tool for the Wine Industry
Contractor	Department of Energy, Lawrence Berkeley National Laboratory
Site Location	Berkeley, CA
PIER Manager	Rajesh Kapoor

This project is being conducted by the California Energy Commission's Public Interest Energy Research (PIER) program. PIER supports energy research and development that improves the quality of life in California by bringing environmentally safe, affordable, and reliable energy services and products to the marketplace.

IAW Projects Completed in 2004

Acoustic Stimulation for Aluminum Castings to Conserve Metal and Electricity

Contract #: 500-02-024
Contractor: California Cast Metals Association
Subcontractors: Simonelli and Associates : Furness-Newburge, Inc. : Technikon
Contract Amount: $135,500
Match Amount: $88,500
Contractor Project Manager: James Simonelli (916) 933-3062
Commission Contract Manager: Paul Roggensack (916) 654-6560
Status: Completed

Project Description:
The purpose of this project is to develop and demonstrate acoustic stimulation technology at the aluminum foundries in California to reduce energy use in the metal casting process. The technology consists of an audio device vibrating at lower than ultrasound frequencies at high amplitudes inserted into the risers of molds for metal castings.

Laboratory tests have shown acoustic stimulation will lower pouring temperatures and delay solidification of molten metal. These tests were performed on simple bar molds. The next step is to demonstrate the technology using industrial molds at an actual foundry to facilitate industry acceptance and commercialization.

Test castings that used acoustic stimulation showed improved mechanical properties versus the metal from castings that did not use acoustic stimulation. But the main advantage is energy and metal savings by increasing the yield of metal castings. Yield is determined from the weight of the pour minus the weight of the metal left in the risers, which is waste. Risers must be large enough and at sufficiently high temperatures to keep the metal liquid to fill voids formed in the mold as the casting cools and contracts. Acoustic stimulation will make the metal more fluid and improve liquid flow, which will allow smaller volume risers to fill voids.

A successful application of the technology will be on thin wall castings. Thin wall castings require superheating to fill the thin sections of the mold, which can degrade the metal. If acoustic stimulation could be used on thin wall castings without superheating, it could produce better thin wall castings in addition to saving energy and metal.

The technology developed and demonstrated under this project will benefit aluminum foundries, of which there are at least 75 in the State, more than any other type of metal foundry. After it is established in the aluminum foundries, the technology can be adjusted to other metals such as iron, steel, brass and bronze.

This project supports the PIER Program objectives of:
- Improving the energy cost/value of California's electricity.
- Improving the environment, public health and safety.
- Improving electricity reliability, quality and sufficiency.
- Strengthening the California economy.

Proposed Outcomes:
1. Build and test an acoustic stimulator adapted for foundry molds.
2. Complete a series of pours on thin wall molds with and without acoustic stimulation.
3. Determine electricity and metal saved using acoustic stimulation.
4. Technology transfer to the metal casting industry.

Actual Outcomes:
1. Built and tested an acoustic stimulator adapted for foundry molds.

2. Completed a series of pours on thin wall molds with and without acoustic stimulation but further research is needed to apply the technology on thin wall pattern sand molds.
3. The Project succeeded in demonstrating energy savings and waste metal reduction from lower pour temperatures in an aluminum foundry.
4. Made technology transfer to the metal casting industry.

Project Status:
The project has been completed.
Final Report Title: Acoustic Stimulation for Aluminum Castings To Conserve Metal & Electricity
Publication Number: 500-04-090F
Publication Date: November 2004
PIER Web Location: www.energy.ca.gov/pier/final_project_reports/500-04-090f.html

Energy Efficiency Roadmap for Petroleum Refineries in California

Contract #: 500-03-010
Contractor: Energetics, Incorporated
Contract Amount: $42,992
Contractor Project Manager: Joan Pellegrino (410) 953-6202
Commission Contract Manager: Rajesh Kapoor (916) 654-4611
Status: Completed

Project Description:
This contract with Energetics, Inc. is enabled by a grant from the U.S. Department of Energy (DOE), for developing an energy efficiency RD&D roadmap for the petroleum refineries in California.

In 2002, the PIER program was awarded a grant by the U.S. DOE's State Industries of the Future (SIOF) program to develop a roadmap that would identify petroleum industry issues, priorities, and options for increasing energy efficiency. The $185,000 federal grant required that the PIER program develop a roadmap for further RD&D investments in California. The DOE grant specified that the roadmap be developed through a workshop involving industry participants.

The petroleum refining industry (Standard Industrial Classification #32411) in California is concentrated in two areas: the Los Angeles basin and San Francisco Bay. The industry is an important economic factor in these areas, providing nearly 10,000 jobs directly and a multitude of indirect employment. Value of shipments in 1997 was just over $19 billion. A variety of companies operate refineries in California, including Chevron-Texaco (partnered with OIT), BP-ARCO, and Valero. It is also the single largest energy-consuming sub-sector in California. Energy is the key ingredient in the conversion of crude oil to clean refined petroleum products. Increased demand for light oil products, combined with the efforts to reduce sulfur content in gasoline and the replacement of MTBE by ethanol will lead to increased energy expenditures. As most refineries are near urban areas, continued public pressure on the environmental performance of refineries leads to increased interest in pollution prevention. Increasing production in an environmentally sound manner, while reducing energy consumption through development and implementation of innovative technologies, is essential for the development of a sustainable oil industry in California.

Petroleum refineries are the single largest industrial consumer of electricity in California. In the year 2000, refineries consumed 6.230 GWh of electricity. In addition, this segment is also the second largest industrial user of natural gas and consumed 1,432 million therms. Although the refineries produce a vast amount of electricity themselves, they are always looking for increasing reliability and reducing the energy input per barrel of refined output.

This project supports the PIER Program objective of:

- Addressing important RD&D gaps by identifying and laying out a technology roadmap for meeting the priority RD&D needs of California's petroleum refineries.

Proposed Outcomes:

1. Conduct a technology roadmap workshop.
2. Develop a roadmap that will identify petroleum refining industry issues, priorities, and RD&D opportunities for increasing the energy efficiency in petroleum refineries in California.

Actual Outcomes:

1. The workshop was held in Los Angeles on January 14, 2004. The participants at the workshop consisted of refinery engineers, energy or facilities managers, and consultant and research institutions that are familiar with the refinery processes. Because California's environmental

regulations and petroleum product mix differ from other states, the nature and scope of energy issues for California are markedly different. Thus the RD&D focus needs a separate assessment.

The technology roadmap workshop helped the PIER staff establish a working relationship with the petroleum refineries in California and also helped the PIER staff better define, understand and mitigate the energy efficiency issues affecting this industry. Since this segment of industrial ratepayers is the largest user of energy in California, the outcome of this workshop and the resulting report helped the PIER program potentially develop a RD&D agenda for energy efficiency that is responsive to this industry's needs. The key contract deliverable -- the RD&D roadmap -- is the foundation for such work. In addition, work in this area will help meet the goals set under Commission's Energy Action Plan.

2. A major California utility is using the technology roadmap to develop its Public Goods Charge (PGS) funded energy efficiency programs for the petroleum refinery industry.

Project Status:
This project has been completed within the budget.
Final Report Title: Energy Efficiency Roadmap for Petroleum Refineries in California
Web Location: www.eere.energy.gov/industry/petroleum_refining/pdfs/refining_roadmap.pdf.

Gas Fired Hot Water Heat Pump Thermosorber for Food and Beverage Industry

Contract #: 500-01-028
Contractor: Energy Concepts Company
Subcontractors: NOVA Greening
Contract Amount: $240,000
Match Amount: $80,000
Contractor Project Manager: Donald Erickson (410) 266-6521
Commission Contract Manager: Rajesh Kapoor (916) 654-4611
Status: Completed

Project Description:
The purpose of this project is to demonstrate a gas-fired hot water heat pump ThermoSorber in the food and the beverage industries. The proposed technology approximately doubles the energy efficiency by co-producing the hot water and the chilling concurrently. This technology is projected to reduce the consumption of the natural gas by 40 percent in the hot water production, and reduce the chilling production cost by as much as 80 percent. The economic payback of reducing the gas and electric utility costs is less than two years. Even at this early commercialization stage, the technology has great market potential.

Many food and beverage industries require storage applications and heating and cooling processes. Gas-fired boilers supply the heat while electrically driven refrigeration systems provide the cooling. The cost of the energy consumed by these devices is a major concern of the industry. Gas-fired, hot water heat pump ThermoSorbers transfer heat from lower temperature to a higher temperature. In effect, ThermoSorbers produce both the cooling and the heating concurrently using a fraction of the total energy. The industry, however, was not familiar with this technology and had doubts about its performance until the PIER project demonstrated its operations and energy saving potential.

This project supports the PIER Program objective of:
- Improving the energy/cost value of California's electricity by significantly reducing the use of natural gas used to heat water and the production cost of chilling used in the food and beverage industry in California.

Proposed Outcomes:
1. Reduce the consumption of natural gas by 40 percent in the hot water production along with 80 percent reduction in electric use by co-producing chilling.
2. Demonstrate a high-efficiency, gas-fired hot water heat pump ThermoSorber technology, which transfers the heat from a lower temperature to a higher temperature, and produces the cooling and heating at the same time using a fraction of total energy.

Actual Outcomes:
1. Reduced the consumption of natural gas by 40 percent in the hot water production along with 80 percent reduction in electric use by co-producing chilling.
2. Demonstrated a high-efficiency gas-fired hot water heat pump ThermoSorber technology.

Project Status:
- The kick-off meeting was held at the California Energy Commission on May 6, 2002.
- Several demonstration sites were selected for application requirements. These included breweries, processing plants and a major diary. However, due to economic considerations, only one was finally selected. The contractor designed the plan and prepared a draft test plan that defines the testing procedure and methods of monitoring the performance of the ThermoSorber unit.
- The first ThermoSorber unit was installed at Squab Valley Company, Modesto on March 12, 2003 and is running well.

- The capacity for water storage at the Squab plant was augmented to optimize the use of this technology for plant conditions specific to the Squab processing plant. This addition substantially improved the economics of the plant operation.
- California Institute of Food and Agriculture Research (CIFAR) is currently making an independent assessment of the economic performance of this new technology.
- The final meeting at the conclusion of the project was held on December 28th, 2004 where the potential sites for the second demonstration were discussed.
- The contractor will submit the final report to the contract manager February 2005.
- A new contract will be written up once a second demonstration site is found to confirm the results of the first demonstration. The $40,000 balance left in this contract will be used for the second demonstration.

Methodology to Optimize Compressed Air Energy Efficiency for Industry

Contract #: 500-01-026
Contractor: Southern California Edison
Contract Amount: $178,000
Contractor Project Manager: Babu Joseph (626) 633-7177
Commission Contract Manager: Rajesh Kapoor (916) 654-4611
Status: Completed

Project Description:
The purpose of this project is to develop a benchmark and the methodology to quantify the central plant efficiency of compressed air systems. Compressed air is the fourth largest commonly used utility in the industrial operation after the electricity, natural gas and water. At present, the efficiency of an individual air compressor unit is well established and has a recognized benchmark. However, the entire compressed air system in a plant has no quantitative benchmark for efficiency. The lack of this benchmark based on empirical evidence (rather than by inference) has made it difficult to develop an optimum operating strategy and has inhibited accurate measurement of energy efficiency improvements.

There are numerous California industries that use compressed air as the plant energy source. There are methods available in the industry to control the efficiency of the compressor but there are no accurate methods available, at the present time, to optimize the efficiency of the compressed air system in a central plant. In most plants, there are many opportunities for energy conservation related to the generation, distribution and use of the compressed air. An estimated 30 percent of the total energy cost of the central plant is from the compressed air energy system. In some industries, the waste of energy associated with the compressed air system is as high as 40 percent. Consequently, the penalty for the improper management of the compressed air energy system is very high and there is a need for the methodology to quantify the central plant efficiency of the compressed air system.

This project contributes to the PIER program objective of:

- Improving the energy cost/value of California's electricity by helping create the methodology to quantify efficiency of Compressed Air Energy Storage (CAES) systems in a central plant.

This project is also supported by the Emerging Technology Coordination Council (ETTC), Pacific Gas & Electric, San Diego Gas & Electric and a group organized under the California Public Utilities Commission (CPUC) directive. The contractor will make the findings and reports available to all the utilities and their industrial customers.

Proposed Outcomes:

1. Establish the benchmark and develop the methodology to quantify the efficiency of the central plant's compressed air systems.
2. Assist California utilities in providing an acceptable process for energy efficiency rebate programs.
3. Provide industrial customers an acceptable procedure to assess system performance and to evaluate their systems against other systems.
4. Disseminate information generated by this project to industry stakeholders via papers, presentations, workshops, etc.

Actual Outcomes:

1. Established the benchmark and developed the methodology to quantify the efficiency of the central plant's compressed air systems.
2. Assisted California utilities in providing an acceptable process for energy efficiency rebate programs.
3. Provided industrial customers an acceptable procedure to assess system performance and to evaluate their systems against other systems.
4. Disseminated information generated by this project to industry stakeholders via papers, presentations, workshops, etc.

Project Status:

- The project start-up industrial meeting was held at Southern California Edison (SCE) offices. Participants at this meeting identified the applicable metering devices for the flow measurement, identified the customer sites that were good candidates for the instrumentation and testing, and selected the six sites for the testing.
- The contractor purchased all measurement devices for the testing. The flow, static pressure and temperature devices were calibrated.
- The concept development and development of the calibration methodology was completed. The methodology for developing the CAES index was tested at six different industrial sites, and was found to be accurate, robust and easy to implement.
- The contractor successfully finished the testing at the six customer sites in the SCE territory. The industrial customers are happy with the results of the testing. SCE has started giving rebates to those industrial customers who are using this methodology to quantify the efficiency of their central plants' compressed air systems.
- Two workshops were held to explain this technology to compressed air professionals and the California public. One was held in Southern California (Irwindale) and the other was held in Sacramento. Several companies in California have shown interest in applying this methodology at their expense.
- The project is completed within the budget and has achieved its goals.
- The contractor will submit the final report to the Contract Manager in February 2005.

Power Quality Knowledge-Based Services (EPRI Program #97)

Contract #: *500-02-028* ***Project #:*** *20*
Contractor: *Electric Power Research Institute (EPRI)*
Project Amount: *$25,000*
Contractor Project Manager: *Bill Howe (303) 417-1514*
Commission Contract Manager: *Mike Gravely (916) 834-3127*
Status: *Completed*

Project Description:
The Power Quality Knowledge-Based Services program provides the essential information and resource tools needed to help Energy Commission Staff understand the economic losses, industrial process impacts and other factors that power quality disturbances cause California industrial and agricultural end users. The program offers a comprehensive collection of technical and informational publications and products, educational forums, technical support, and web-based services to enable staff to efficiently deal with today's power quality issues, planning, mitigation, and prevention.

The program provides four electronically distributed newsletters *Signature, Current Connections, TechWatch* and *PQNews* which regularly provide the latest information on power quality business, technical trends, educational opportunities, and project updates. A power quality case study library is available to Commission Staff and other EPRI funding members to reference when desired.

The Power Quality Knowledge-Based Services Program also provides Commission Staff access to special projects technical reports designed to help build a knowledge base of the latest power quality information, tools, products, and expert insights into power quality, provide late-breaking news on emerging power quality technologies and market trends.

This project supports the PIER Program objective of:
- Optimizing Energy Conservation & Resource Efficiency by providing guidance on methods to enhance and improve system power quality and increase the efficiency of the utility network.

Proposed Outcomes:
1. Subscribe to EPRI's *Signature* newsletter.
2. Subscribe to EPRI's *PQ News* newsletter.
3. Subscribe to EPRI's *Current Connections* newsletter.
4. Subscribe to EPRI's *TechWatch* newsletter.
5. Subscribe to EPRI's Power Quality area on EPRIweb.

Actual Outcome:
1. All subscription services received.

Project Status:
1. Electronic Publications and Technical Resources: *Subscription to EPRI's PQ Knowledge-transfer electronic publications and resources.* EPRI Product ID # 1008535.
2. EPRI PQ Encyclopedia: *A definitive desk reference of PQ phenomena, guidelines, mitigation techniques, and management strategies.* Review for advisories was conducted September 2004. EPRI Product ID #1008536.
3. PQ Knowledge Transfer: *Access to the Power Quality area on EPRIweb.* Review meeting with funders was conducted in September. Content continues to be updated weekly. EPRI Product ID # E215298.
4. PQ Consulting and Training: *The PQ Hotline.* The PQ Hotline is active and is fielding inquiries daily. EPRI Product ID # E215299.
5. PQ Events and Forum. Two PQIG events have been completed in 2004. *PQIG North America, October 5-6, 2004, Nashville TN. PQIG International, September 12-13, 2004, Fukuoka, Japan, sponsored by Kyush Electric*. EPRI Product ID # E215302.

The project was completed in December 2004.

RD&D Program Development for Ensuring Energy Supply for California's Electronics/E-Commerce Industries

Contract #: 100-98-001 **Project #:** 48
Contractor: Electric Power Research Institute (EPRI)
Subcontractors: EPRI PEAC Corporation : Global Energy Partners, LLC
Project Amount: $960,000
Contractor Project Manager: Ellen Petrill (650) 855-8939
Commission Contract Manager: Pramod Kulkarni (916) 654-4637
Status: Completed

Project Description:
The purpose of this project is to identify the issues affecting California's electronics and high-tech industry and to develop a comprehensive technology research, development and demonstration (RD&D) roadmap in collaboration with the industry to ensure a reliable energy supply to California's electronics industry. This project also entails developing and/or demonstrating candidate technologies that enhance supply reliability and the ability of the industry to manage energy during an energy crisis. Recent (2001) disruptions in California's electricity supply and escalating energy costs pose serious threats to this industry, which is a substantial contributor to the State's economic growth.

The project developed a comprehensive RD&D plan that 1) provides short-term robust remedies to the recent energy crisis, and 2) maps a RD&D action plan that will reinforce the confidence of the electronics industry in California's energy infrastructure for the longer term. This plan will be used to provide the PIER program guidelines for future RD&D projects and efforts.

This project supports the PIER Program objectives of:

- Optimizing energy conservation & resource efficiency by developing a comprehensive RD&D plan.
- Strengthening California's economy by enhancing the high-tech industry's ability to obtain reliable energy at a reasonable cost.

Proposed Outcomes:

1. Develop an RD&D program plan that provides immediate and intermediate (five years maximum) solutions to help the electronics industry meet the energy challenge in California.
2. Implement a fast-track program through technology development and demonstrations that help mitigate urgent problems faced by the industry.
3. Transfer program results to principals in the industry to gain maximum utilization in order to attain PIER program goals.

Actual Outcomes:

1. RD&D Plan and Roadmap for Enhancing Energy Efficiency and Supply Reliability for California's Electronics Industry was completed.
2. Two fast-track programs were implemented as part of this effort. The first was the application of ultracapacitor technology to improve industrial process reliability in a large manufacturing facility, and the second was the development of a real-time information tool to demonstrate the capability to provide industrial end users real-time energy cost information management.
3. Several technology transfer presentations were provided to industrial associations and California industrial companies to ensure the lessons learned in this effort were provided directly to the appropriate California end uses.

Project Status:
The project reports will be available May 2005.

IAW Projects Completed in 2003

Advanced Distillation

Contract #: 100-98-001 **Project #:** 36
Contractor: Electric Power Research Institute (EPRI)
Project Amount: $100,000
Match Amount: $2,500,000
Contractor Project Manager: Ed Fouche (919) 515-7550
Commission Contract Manager: Pramod Kulkarni (916) 654-4637
Status: Completed

Project Description:
The purpose of this project is to determine more precisely the potential benefits to the state of California of implementing advanced distillation within the state. Advanced distillation technology includes a number of enhancements to a design concept called "distributed distillation," which is an energy optimization analysis that aims to eliminate inefficiencies in conventional distillation. Advanced distillation can typically reduce energy use requirements, cooling water requirements, and environmental emission per pound of distillate by 50%. Any industry that uses distillation can potentially benefit from advanced distillation. The two industries that use the most distillation are petroleum refining and the hydrocarbon portion of the chemical industry (which includes industrial organic chemicals, plastics, organic detergents, organic pesticides and agricultural chemicals, and adhesives and sealants).

This project supports the PIER Program objectives of:
- Improving energy cost/value.
- Improving the environment, public health and safety.

Proposed Outcomes:
The study will be conducted in two phases: In Phase I, researchers will determine the current California distillation energy use profile by industry segment and type of distillation. The project will also identify industry segments that would benefit most from application of advanced distillation technology.

In Phase II, EPRI will assist the Commission with participation in a technical study, sponsored by British Petroleum and the US DOE, to determine the energy savings of advanced distillation for an ethylene plant in California.

Actual Outcomes:
In Phase I, researchers identified the current distillation energy use profile in California by industry segment and type of distillation. The team also determined the industry segments in California that would obtain the greatest benefit from advanced distillation methods.

Results indicated that if a conservative 25% of all existing distillation within the state is revamped using advanced distillation, the annual thermal energy savings is estimated to be 52 trillion Btu. Another 5 trillion Btu in annual savings could be achieved in potential near-term new chemical plant construction. The value of this potential 57 trillion Btu/yr savings is:
- $142,500,000 (at a $2.5/mmBtu fuel cost)
- $285,000,000 (at a $5/mmBtu)
- $570,000,000 (at $10/mmBtu)

Overall electricity savings would be about 1% of the thermal savings (about 200 megawatts). In addition to fuel savings and electricity savings, capital cost savings of up to 40% or more could be achieved, representing savings on the order of $800 million. Additional revenue could be realized through increased production. For the California petroleum refining industry (which represents more than 82% of the potential energy savings), the 25% of revamped distillation represents a 25% or more increase in production, which is worth on the order of $1 million per year in additional profit at a conservative $0.5/BBL profit margin.

The 57 trillion BTU/yr energy savings has an associated decrease in air pollution, water use, and wastewater discharges (including decreases of about 15 million ton/yr in carbon dioxide, 7,000 ton/yr NO_x, 27 million tons/yr fresh water, and 1.5 million tons/yr wastewater).

Project Status:
Phase I is complete and covered in EPRI Report 1006719. Phase II of the study was cancelled because Phase I revealed there were no ethylene plants in California. Project is complete.

Effects of Chlorine Dioxide Preoxidation on Ozone Demand and Energy Consumption

Contract #: 500-00-024
Contractor: Contra Costa Water District
Contract Amount: $130,000
Contractor Project Manager: Peter Zhou (805) 688-8370
Commission Contract Manager: Pramod Kulkarni (916) 654-4637
Status: Completed

Project Description:
The purpose of this project is to evaluate the impact of chlorine dioxide preoxidation on ozone demand, and thus energy consumption, at a water treatment plant in the Contra Costa Water District. The project will assess partially substituting ozone with chlorine dioxide for preoxidation because ozone use is energy intensive.

This project supports the PIER Program objectives of:

- Improving energy cost/value of California's electricity by quantifying the energy and cost savings when preoxidizing water with chlorine dioxide.
- Improving the environment, public health and safety by providing improved-quality water using less electrical energy.

Proposed Outcomes:

1. Potential reduction of electrical load between 3.7 MW to 6.9 MW.
2. Develop a relationship between the chlorine dioxide dose and ozone demand and bromate formation.
3. Quantify chlorate formation after ozone application to the preoxidized water.
4. Establish the effects of chlorine dioxide preoxidation on coagulation and settling prior to ozonation.
5. Quantify the energy and cost savings when preoxidizing the water with chlorine dioxide.

Project Status:
The work on design specifications and development of a test plan commenced on June 1, 2001 using Contractor's match funds. The kick-off meeting starting Energy Commission involvement was held on November 13, 2001 at Contra Costa Water District's Randal Bollman Water Treatment Plant in Oakley, California. The experimental work is almost completed and the data is being analyzed. First draft of the Final Report was submitted in November 2002, and is being revised by the contractor to incorporate Contract Manager's comments. Technology transfer workshop is tentatively scheduled for early March 2003. The work on this contract is on schedule.

Emerging PQ Mitigation Product Demonstration at Customer Sites

Contract #: 100-98-001 **Project #:** 39
Contractor: Electric Power Research Institute (EPRI)
Subcontractors: EPRI PEAC Corporation
Project Amount: $60,000
Contractor Project Manager: Ashok Sundaram (650) 855-2304
Commission Contract Manager: Pramod Kulkarni (916) 654-4637
Status: Completed

Project description:
This project's goal is to obtain real-life application experience with emerging power quality mitigation technology through demonstrations at customer sites. The demonstrations will enable the project team to characterize the limitations of the technology and identify opportunities for improvement. Customers involved in demonstration projects will obtain experience with the technology and will be able to train personnel in its application.

Power quality concerns continue to be an important factor affecting the productivity of California industries. The Commission is facilitating the development of new power quality mitigation hardware for customers. This project will take the technology development into the next step of demonstration projects to obtain experience and develop expertise in the application of the technology.

This project supports the PIER Program objectives of:

- Improving the Reliability/Quality of California's Electricity by developing knowledge and procedures to solve power quality problems that cause equipment failures and process disruptions.
- Improving the Energy Cost/Value of California's Electricity by reducing process inefficiency associated with power quality disturbances.

Proposed Outcomes:

1. Obtain experience and develop expertise in the application of new and emerging PQ mitigation hardware.
2. Characterize limitations and help identify opportunities for improvement of new technology developments in practical applications.
3. Develop estimates for operating and maintenance requirements as a function of the applications for the technology.

Actual Outcomes:
In 2001 the project team conducted site audits to determine the best location for demonstration. In addition, the requirements for PQ mitigation were determined for those sites.

The field demonstration was conducted in 2002. The device installed was a neutral current filter. The intent of the demonstration was to determine the extent to which the device helped to conserve energy. Energy savings are possible due to the blocking of third harmonic current in the neutral conductor. This is applicable for single-phase non-linear loads supplied by a wye-connected transformer secondary. The measured results indicated that a small amount of energy savings is achieved, through the reduction of I^2R losses in the neutral conductor. The payback time for the filter, based on those savings alone, was calculated. The Commission will now be able to show, for interested customers, that these filters can pay for themselves through energy savings, and also estimate how long that will take.

Project Status:
The project has been completed.

Energy Efficiency Measures for High Tech Buildings, Clean Rooms and Laboratories

Contract #: 400-00-020
Contractor: Lawrence Berkeley National Laboratory
Subcontractors: Northwest Energy Efficiency Alliance : United States Department of Energy : ASHRAE : Sematech, Inc. : Major Energy Users Group (MEUG) : EPA/FEMP Laboratories for the 21st Century : University of California, Office of the President : California State University
Contract Amount: $652,000
Match Amount: $125,000
Contractor Project Manager: John Kesselring (650) 855-2902
Commission Contract Manager: Tony Wong (916) 654-4015
Status: Completed

Project Description:
The purpose of this project is to research and develop design tools and a guidebook for energy efficient cleanrooms for high-tech industries and laboratories. Laboratories and cleanrooms serve the semiconductor, electronics, bio-pharmaceutical sectors. In addition, the contract will evaluate and support field demonstrations and tests of the low-flow fume hood.

This project supports the PIER Program objective of:

- Improving the energy cost/value of California's electricity to electric ratepayers by reducing energy use or improving energy efficiency in the industrial sector.

Proposed Outcomes:

1. Develop a cleanroom facility planning guide that provides guidance to cleanroom owners and designers in setting and implementing an energy strategy in the programming process, prior to detailed design.
2. Evaluate field performance of a low-flow fume hood and identify design improvements.
3. Complete development of a laboratory design intent tool that will allow laboratory designers to effectively document their approach and expectations related to energy performance and design throughout the life of the facility.
4. Develop a more comprehensive roadmap that will identify additional research needs, needed energy technologies for high-tech buildings, energy systems with the most potential for energy savings.

Actual Outcomes:
The Cleanroom Programming Guide was completed (LBNL report number 49223) and issued for trial use in December 2001. Copies of laboratory design intent tool were distributed to attendees at the "Laboratories for the 21st Century" conference in October 2002. A case study was completed for a proposed laboratory facility at UC Merced. High priority research tasks as identified by the roadmap process and subsequent survey of industry participants were presented at the Silicon Valley Manufacturers Group meeting in May 2002. A technology roadmap for High-performance Laboratories and Cleanrooms was completed (LBNL report number 50599). A final report has been prepared for the above three tasks.

The development and demonstration of the six-foot Berkeley hood has encountered some problems. First, the delivery of the prototype was delayed from the manufacturer and required extensive corrective re-construction. Second, the process for obtaining a variance from Cal/OSHA for field demonstration has taken more time than anticipated. Currently, LBNL staff are working with Cal/OSHA Standards Board staff to seek an interpretation from the American National Standards Institute regarding an equivalent performance indicator for “traditional” face velocity. This interpretation would be used to evaluate laboratory-type hoods having design features that do not use traditional face velocity as their method of containment.

Project Status:
The project has been completed.

Energy Efficient Data Centers

Contract #: 500-01-024
Contractor: Lawrence Berkeley National Laboratory
Subcontractors: Rumsey Engineers, Inc.
Contract Amount: $500,000
Match Amount: $100,000
Contractor Project Manager: William Tschudi (510) 495-2417
Commission Contract Manager: Paul Roggensack (916) 654-6560
Status: Completed

Project Description:
The purpose of this project is to benchmark energy use in data centers and to develop a roadmap to guide research that will increase the energy efficiency at data centers. Data centers are prevalent in many buildings and are an important part of the California economy. These facilities use a large amount of energy. Rapid expansion of information technology and improvements has created a unique challenge to California's power grid.

Data centers are becoming more energy intensive in smaller spaces. Computer power is increasing dramatically while system components shrink. An example of the increased demand for energy use in data centers is the development of the World Wide Web. New Internet "server hotels" are being proposed across California and the nation. Unfortunately, energy efficiency has not evolved as rapidly as component size reduction and other technological improvements.

In addition to increased energy demand from data centers, there is discrepancy between projected electrical demand by developers and building owners and actual electrical consumption. This leads to inefficient operation because there is a tendency to overstate the electrical load of these facilities and their impact on regional power grids. Outdated cooling practices also lead to inefficient operation.

Phase 1 of this project will provide an energy end use breakdown from representative data center facilities. This will result in development of standards and measurements to determine energy efficiency of data centers. The result will be a design guide to enable building planners use a systems approach to design energy efficient data centers.

Phase 2 of this project will develop a roadmap to guide research and market transformation of new technologies for data centers. LBNL will work with industry experts through workshops and surveys to obtain the necessary information to develop the roadmap. The roadmap will provide continuous improvement in energy performance and address opportunities for both retrofit and new construction for data center facilities.

This project supports the PIER Program objectives of:

- Improving energy cost/value by developing a roadmap to guide research that will increase energy efficiency at data centers.
- Improving electricity reliability, quality, and sufficiency by providing data on potential energy savings in a design guide for building planners that can lead to more efficient operations of data centers as they continue to expand across California and the world.

Proposed Outcomes:

1. Six benchmark studies that categorize energy end use at data centers and will provide a guide for designers and builders of data centers.
2. A roadmap to guide research and market transformation for future technologies at data centers.

Actual Outcomes:

1. A total of ten benchmark studies completed.

2. Energy Efficiency Data Centers Roadmap completed.

Project Status:
The project has been completed.

Energy Storage and Power Electronics for Power Quality Solutions

Contract #: 500-02-028 **Project #:** 14
Contractor: Electric Power Research Institute (EPRI)
Project Amount: $66,300
Contractor Project Manager: Ashok Sundaram (650) 855-2304
Commission Contract Manager: Pramod Kulkarni (916) 654-4637
Status: Completed

***Project Description*:**
This multi-member program provides the Commission staff with the latest data, information, and knowledge about power electronics and energy storage solutions that can be applied inside a California end-user's facility or within a utility T&D system as a widearea PQ solution to help eliminate these costly PQ disturbances. In the global marketplace, all companies must rely increasingly on superior innovation for competitive advantage. Sponsoring this program and providing its research results to California end-users can help enhance productivity and ensure the competitiveness of California commerce and industry. This program offers expert insight into power conditioning issues, along with guidance on the proper selection, application, and installation of power quality mitigation hardware.

Energy Storage and Power Electronics for PQ Solutions consists of four multi-year projects that deliver specific products for each funding year. These projects will help bring to market original equipment that has greater immunity to power quality disturbances and provides more cost-effective solutions to end users, reduce up-front engineering expenses, increases end user productivity, provide higher utilization value for power quality mitigation technology, increase system efficiency, help reduce electromagnetic fields and environmental impacts to air quality, provide knowledge for the proper application of emerging power quality mitigation technologies, and provide end-users with credible performance data for new power conditioning technologies.
This multi-year approach is key to developing a long-term plan that effectively addresses next-generation power conditioning and energy storage issues.

This project supports the PIER Program objective of:

- Optimize Energy Conservation & Resource Efficiency by providing guidance on the efficient use of electric energy storage by the California industrial end users.

Proposed Outcomes:

1. Embedded Solution for Internet and Telecommunications Industries: Testing and design evaluation assessing the uptime requirements of process equipment in industry, and identifying advanced technologies as embedded solutions. Technical Report.
2. A workshop to introduce new equipment immunity standards to industry stakeholders will be scheduled in 2003.
3. Design Specification, Test Methodology, and Application Guide for a Hybrid Multi-Energy System for Power Quality Mitigation. Technical Report.
4. Technology Assessment and Application Guide for Emerging Power Quality Mitigation Hardware. Technical Report.

Actual Outcomes:

1. Technical report on Embedded Solution for Internet and Telecommunications Industries: Testing and design evaluation assessing the uptime requirements of process equipment in industry, and identifying advanced technologies as embedded solutions.
2. A workshop with industry stakeholders was held in September 2003.
3. Technical report on Design Specification, Test Methodology, and Application Guide for a Hybrid Multi-Energy System for Power Quality Mitigation.
4. Technical report on the Technology Assessment and Application Guide for Emerging Power Quality Mitigation Hardware.

Project Status:
The project has been completed.

Improving Power Quality Immunity in Industrial and Commercial Equipment

Contract #: *500-02-028* ***Project #:*** *11*
Contractor: *Electric Power Research Institute (EPRI)*
Project Amount: *$20,790*
Contractor Project Manager: *Ashok Sundaram (650) 855-2304*
Commission Contract Manager: *Pramod Kulkarni (916) 654-4637*
Status: *Completed*

Project Description:
The project will develop a series of case studies to help Commission staff members understand the likely causes of power quality problems and to better understand what California Industrial end users can do to make equipment more efficient and less susceptible to electrical disruptions. The case studies will be written from the end user perspective and will illustrate how to improve the power quality immunity of end-use equipment. They will provide technical and economic information for different end-use segments, as identified by the program advisory group. The number and type of case studies will be determined by total amount of funding provided by all the project sponsors. The project also will deliver a final report discussing equipment immunity issues and investigation methodologies for stabilizing the electrical supply network.

This project supports the PIER Program objective of:

- Optimize Energy Conservation & Resource Efficiency by providing guidance on methods to optimize the system power quality and the efficient use of electric energy by California industrial end users.

Proposed Outcomes:

1. Technical Report on Improving Power Quality Immunity in End-Use Equipment Case Studies.
2. Technical Report on Impact of SEMI F47 Power Quality Immunity Standard on Utility and Customers.
3. Technical update on Improving Power Quality Immunity in End-Use Equipment Case Studies.

Actual Outcomes:

1. Technical Report on Improving Power Quality Immunity in End-Use Equipment Case Studies.
2. Technical Report on Impact of SEMI F47 Power Quality Immunity Standard on Utility and Customers.
3. Technical update on Improving Power Quality Immunity in End-Use Equipment Case Studies.

Project Status:
The project has been completed.

Industrial Design Guide Enhancements

Contract #: 500-02-028 **Project #:** 12
Contractor: Electric Power Research Institute (EPRI)
Project Amount: $24,310
Contractor Project Manager: Ashok Sundaram (650) 855-2304
Commission Contract Manager: Pramod Kulkarni (916) 654-4637
Status: Completed

Project Description:
The EPRI Industrial Design Guide (IDG) provides a strong technical basis for working with industrial end users in power quality, distribution, and economic development activities. It describes in detail such industrial processes as injection-molded plastics and CNC machining, includes electrical diagrams of the processes and sub-processes, and discusses the economics of process-associated downtime. The descriptions and drawings are interactive, leading the user to important power quality and energy efficiency considerations such as sensitive components, test protocols, solutions, applications, and relevant case studies. This authoritative guide to industrial processes can be used to enhance the technical understanding and credibility of all Commission staff as they interface with California Industry end users.

This 2003 project will add descriptions, diagrams, and economic evaluations of new industrial processes to the IDG Web site under EPRIweb. Additional processes will be included as the information is developed and formatted during the year, along with information from system compatibility research and forensic examination of failed equipment, so the site is continually updated. The project will also produce an updated CD version of the guide at the end of the year. The project results will provide a comprehensive knowledge base of California industrial processes.

This project supports the PIER Program objective of:

- Optimize Energy Conservation & Resource Efficiency by providing guidance on methods to optimize the system power quality and the efficient use of electric energy by California industrial end users.

Proposed Outcome:

1. Industrial Design Guide: Updated Web and CD versions.

Actual Outcome:

1. Industrial Design Guide Technical Report and CD.

Project Status:
The project has been completed.

Multi-Energy Park Application

Contract #: *500-02-028* ***Project #:*** *13*
Contractor: *Electric Power Research Institute (EPRI)*
Project Amount: *$17,380*
Contractor Project Manager: *Ashok Sundaram (650) 855-2304*
Commission Contract Manager: *Pramod Kulkarni (916) 654-4637*
Status: *Completed*

Project Description:
This project is the continuation of an EPRI managed multi year effort to develop the optimum configuration of multi-energy devices to provide improved power quality as well as high efficiency and reliability. This 2003 work focused on:

- Baseline power quality requirements for Clarkson.
- Power generation plant dynamics during various modes of operation and transitions from one mode to another.
- Campus electrical system short circuit studies to determine required breaker ratings.
- Generator protection and utility system impact studies (connection requirements and needs for Niagara Mohawk).

The multi-year project will review the system and control architectures and the performance requirements of multi-energy solutions currently in operation at commercial and industrial sites. It will investigate how a multi-energy approach can optimize grid power, and will assess its impact on power quality and total energy use.

This project supports the PIER Program objective of:

- Optimize Energy Conservation & Resource Efficiency by providing guidance on methods to optimize the system power quality and the efficient use of electric energy solution options by California industrial end users.

Proposed Outcome:

1. Technical report on the Application and Design Guidelines for a Multi-Energy Park.

Actual Outcome:

1. Application and Design Guidelines for a Multi-Energy Park Technical Report.

Project Status:
The project has been completed.

Power Quality Knowledge-Based Services

Contract #: *500-02-028* ***Project #:*** *10*
Contractor: *Electric Power Research Institute (EPRI)*
Project Amount: *$30,000*
Contractor Project Manager: *Marsha Grossman (650) 855-2899*
Commission Contract Manager: *Pramod Kulkarni (916) 654-4637*
Status: *Completed*

Project Description:
The Power Quality Knowledge-Based Services program provides the essential information and resource tools needed to help Commission Staff understand the economic losses, industrial process impacts and other factors that power quality disturbances cause California Industrial and Agricultural end users. The program offers a comprehensive collection of technical and informational publications and products, educational forums, technical support, and Web-based services to enable electric power service providers to more cost-effectively and efficiently deal with today's power quality issues, planning, mitigation, and prevention.

The program provides four electronically distributed newsletters "Signature, Current Connections, TechWatch and PQNews" which regularly provide the latest information on power quality business, technical trends, educational opportunities, and project updates. A power quality case study library is available to Commission staff and other EPRI funding members to reference when desired.

The Power Quality Knowledge-Based Services Program also provides the Commission Staff access to special projects technical reports designed to help build a knowledge base of the latest power quality information, tools, products, and expert insights into power quality, provide late-breaking news on emerging power quality technologies and market trends.

This project supports the PIER Program objective of:
- Optimize Energy Conservation & Resource Efficiency by providing guidance on methods to optimize the system power quality and increase the efficiency of the utility network.

Proposed Outcomes:
1. An annual subscription to EPRI's *Signature* newsletter.
2. An annual subscription to EPRI's *PQ News* newsletter.
3. An annual subscription to EPRI's *Current Connections* newsletter.
4. An annual subscription to EPRI's *TechWatch* newsletter.
5. An annual subscription to EPRI's Power Quality area on EPRIweb.

Actual Outcome:
All subscription services received.

Project Status:
The project has been completed.

Power Quality Performance-Based Rate Design

Contract #: 500-02-028 **Project #:** 8
Contractor: Electric Power Research Institute (EPRI)
Project Amount: $24,570
Contractor Project Manager: Ashok Sundaram (650) 855-2304
Commission Contract Manager: Pramod Kulkarni (916) 654-4637
Status: Completed

Project Description:
This program offers expert guidance to the Commission Staff on optimizing system power quality, while also addressing the challenges of maintaining transmission and distribution assets, meeting the power reliability requirements of the digital economy, maximizing California business opportunities by accurately assessing risk and staying abreast of relevant regulatory developments impacting the industrial end user. The project will develop design criteria for power quality indices that can be applied in a performance-based rate structure. It will develop methodologies for establishing a power quality baseline, a compliance monitoring system, and business incentives that provide a justifiable return on investments in power quality improvements. The program addresses the escalating demands of competitive markets in terms of grid scale, transactional complexity, and power quality.

This project supports the PIER Program objective of:
- Optimize Energy Conservation & Resource Efficiency by providing guidelines on methods to optimize the system power quality and minimize utility network disruptions.

Proposed Outcome:
1. Technical Report on the Technical Guidelines and Methodology for Power Quality Performance-Based Rate Design.

Actual Outcome:
1. Technical Report on the Technical Guidelines and Methodology for Power Quality Performance-Based Rate Design.

Project Status:
The project has been completed.

Voltage Sag Prediction Model Using Distribution Power Quality Phase II Data

Contract #: *500-02-028* ***Project #:*** *9*
Contractor: *Electric Power Research Institute (EPRI)*
Project Amount: *$16,380*
Contractor Project Manager: *Ashok Sundaram (650) 855-2304*
Commission Contract Manager: *Pramod Kulkarni (916) 654-4637*
Status: *Completed*

Project Description:
This project offers expert guidance to the Commission Staff on acceptable and technically feasible solutions for optimizing power quality, while also addressing the challenges of maintaining transmission and distribution assets, meeting the power reliability requirements of the digital economy, maximizing business opportunities by accurately assessing risk, and staying abreast of relevant regulatory developments. EPRI's Distribution Power Quality (DPQ) Phase II effort in 2002 resulted in a database of voltage sag information at numerous customer sites, including transmission, distribution, and secondary networks. The project will use data from DPQ Phase II to identify the correlation of customer site variables to voltage sag rate, using statistical techniques to evaluate correlation coefficients for each variable. From this analysis, it will choose a set of site descriptors and develop a linear sag predictor model using a multiple regression analysis technique. The program addresses the escalating demands of competitive markets in terms of grid scale, transactional complexity, and power quality.

This project supports the PIER Program objective of:

- Optimize Energy Conservation & Resource Efficiency by providing guidance on methods to optimize the system power quality and minimize utility network disruptions.

Proposed Outcome:

1. Technical Report on the Voltage Sag Prediction Model Using Distribution Power Quality Phase II Data.

Actual Outcome:

1. Technical Report on the Voltage Sag Prediction Model Using Distribution Power Quality Phase II Data.

Project Status:
The project has been completed.

IAW Projects Completed in 2002

Agriculture and Food Technology Alliance (AFTA) - Program 13

Contract #: 500-00-023 **Project #:** 38-39
Contractor: Electric Power Research Institute (EPRI)
Subcontractors: Global Energy Partners, LLC
Project amount: $30,000
Contractor Project Manager: Keith Carns (559) 642-2082
Commission Contract Manager: Pramod Kulkarni (916) 654-4637
Status: Completed

Project Description:
The purpose of this program is to provide information and guidance to help energy companies, production agriculture operations, and food processors meet the demand for a safe and adequate food supply while meeting the newly mandated rules of the Clean Air and Clean Water Acts. Projects focus on food safety, energy efficiency, and environmentally sound processes for solid and liquid waste disposal. All projects have direct applicability or are tied to processes used extensively in California agricultural production and food processing.

AFTA offers technical assistance and customer support in all areas of agricultural production and food processing. The alliance's base of knowledge and expertise may be applied to diverse areas such as animal waste management, aquaculture, membrane and other concentration technologies for treating food production and food processing wastewater streams, food safety and regulatory issues, crop production, and handling and irrigation technologies. AFTA holds joint meetings and workshops for customers, with topics ranging from ozone usage for both agriculture and food processing, to biofuels, membrane technologies, flocculation methodologies, and legislative and regulatory concerns. These meetings allow customers the opportunity to network, discuss customers' needs and provide solutions, and evaluate and discuss future projects and programs. By having available communication tools for common or reoccurring problems, the program can often solve problems before they begin. AFTA staff also tracks emerging technologies in the Agri-Food industry and makes the findings available to program participants.

This project supports the PIER Program objectives of:

- Improving the environment, public health and safety by providing information on electrotechnologies that help California food producers and processors ensure a safe and adequate food supply.
- Providing environmentally sound electricity by expanding the use of electrotechnologies that replace or supplement processes that may harm the environment.

Proposed Outcomes:

1. Develop an Agri-Food Processing and Production Technology Solution Package for the Commission that is tailored to the needs of the California agriculture and food processing industries. The solution package may include consulting meetings between AFTA and Commission representatives, as well as the delivery of technical reports, agri-food news updates, and other information products.
2. Provide a window on news and developments in the agri-food sector by monitoring legislative, regulatory and technical publications, industry contacts and emerging technologies, and making this information available to participants in a timely manner.

Actual Outcomes:

1. Agri-Food Processing and Production Technology Solution Package.
   - Keith Carns, AFTA Director and Vice President of Global Energy Partners, paid a consulting visit to Commission headquarters and met with Pramod Kulkarni and other Commission staff to discuss California agri-food issues and potential research projects, including R&D on an advanced ethanol production process utilizing feedstock other than #2 yellow corn.
   - The following AFTA publications were published and delivered in 2002:
     - *Shelf Life and Pathogen Growth in Irradiated Sausage (1006955).*
     - *Enhancement of Food Safety (1006956).*
     - *Ozone Applications in Fish Farming (1006975).*
     - *Cumberland County College Fish Barn: An Aquaculture Education & Commercial Demonstration Facility (August 2002).*
     - *Product Concentration: an Assessment of EPRI Freeze Technologies 1985-2002 (1007399).*
     - *Treatment of Cut Vegetables with Aqueous Ozone: Technical Assessment (1007465).*
     - *Ozone Improves Processing of Fresh-Cut Produce: Tech Application (1007566).*
2. Agri-Food Technologies Window.
   - Five issues of Food Industry Currents were published in 2002. This quarterly newsletter reports on agri-food industry developments and trends. In May a special fifth edition of the newsletter was published that discussed the implications of the 2002 Farm Bill.
   - The Commission received listings of all nonproprietary AFTA publications, newsletters, Industrial News Today, e-mail alerts, meeting invitations, and hotline access to discuss problems, opportunities and potential projects with the AFTA staff.

Project Status:

The project has been completed.

Development and Demonstration of Liquid Membrane Technology for MTBE Mitigation in Aqueous Streams

Contract #: 100-98-001 **Project #:** 55
Contractor: Electric Power Research Institute (EPRI)
Project Amount: $153,000
Match Amount: $153,000
Contractor Project Manager: Andra Michel (650) 855-2101
Commission Contract Manager: Pramod Kulkarni (916) 654-4637
Status: Completed

Project Description:
The purpose of this project is to develop and explore the economic feasibility of an advanced membrane technology—supported polymer liquid membranes (SPLM)—to reduce and remove methyl tertiary butyl ether (MTBE) contaminant in California water supplies.

The use of MTBE as a gasoline additive has generated a widespread groundwater contamination problem affecting thousands of sites in the state. Although technologies such as oxidation, air stripping, and activated carbon adsorption currently exist to remove or destroy MTBE in water, the use of a supported polymeric liquid membrane could provide an effective, practical and economical alternative. This project will investigate the properties of candidate liquid polymers, identify those most effective at removing MTBE from water, develop membrane support and module designs, conduct feasibility studies, and present results through presentations, reports, and a technology transfer seminar.

Environmental benefits include reducing and removing MTBE from California groundwater supplies, thereby improving the environment and reducing human and ecological exposure to this chemical contaminant.

This project supports the PIER Program objective of:

- Improving the value of electricity and improving the environment and public health costs/risks of California's electricity by developing an effective cleanup technology for MTBE mitigation in the environment, in effect reducing human and ecological exposure to this chemical contaminant.

Proposed Outcomes:
The project team will screen and select the best of existing liquid polymer membranes, and optimize the membrane's coating. Researchers will also design a support system for the membrane and design a prototype membrane module. Based on test data with the prototype and existing data from other treatment technologies, the team will recommend the best systems for a range of contamination situations in California.

Actual Outcomes:
Researchers reviewed existing liquid polymers based on their capabilities for optimum transport of MTBE. Silicone 350 cst (Si-350) and polybutylene glycol MW 4800 (PBG) were found to be the two best polymers because they are non-toxic, have extremely low solubility in water, and have been shown to be stable as supported liquid membranes in contact with pure water.

The researchers then optimized the coating of the best polymers to improve its transport rate and stability. Tests at Spectrum Laboratories showed that pure PBG coating method works well as long as sufficient excess polymer is used to ensure a complete coating, or an improved procedure is developed.

The team designed a hollow fiber support system for the membrane and designed a prototype large-area, hollow-fiber module. For the support system, the team selected a standard off-the-shelf Polysulfone hollow fiber membrane with a molecular weight cut-off of 400 kD for the liquid membrane scaffolding. This pore size has proven successful in holding the polymer in place for the selective extraction of the MTBE. Regarding the design of membrane modules, Spectrum chose an axial winding pattern, consisting

of sixteen parallel hollow fibers wound around a perforated core. Laboratory pilot testing was completed in 2000.

In 2001, Spectrum completed the design of a radial dispersion 35-ft^2 module. All components were delivered to a subcontractor for the assembly of the modules with the new winding geometry. Spectrum assembled the units in three lots of 10 modules, for independent testing at the University of California, Santa Barbara (UCSB).

Dr. Arturo Keller at UCSB tested modules. There were some issues related to the type of winding – certain geometries did not allow for the proper adhesion of Si-350, and therefore did not perform well. Spectrum corrected these problems, and supplied the correct type of modules for full testing at UCSB. The results of tests at UCSB indicate that MTBE can be readily removed from the solution using these membranes. From a technical viewpoint, the membranes performed very well in the testing.

From an economic viewpoint, given the relatively short expected life of the membranes (one to three years), the overall cost of treating water contaminated with MTBE using these membranes is currently estimated to be 6-10 times higher than other treatment processes such as granular activated carbon (GAC) or air stripping. Alternatively, the life of the membrane would have to increase to more than 20 years to result in a cost competitive process.

As a result, further research is warranted to determine whether these barriers can be overcome. Specific research issues to address are:

- Improve the flow of water through the membranes to make full use of the membrane surface area, which will significantly improve overall MTBE mass transfer to the gas phase.
- Develop a less expensive membrane.
- Determine the life expectancy of the membranes under accelerated test conditions.

EPRI completed a final report - *Development of Supported Polymeric Liquid Membrane Technology for Aqueous MTBE Mitigation* (1006577) - in November, 2002. A technology transfer seminar was held in February 2002.

Project Status:
The project has been completed.

Electrotechnology Application for Potable Water Production & Protection of the Environment

Contract #: 500-97-044
Contractor: Edison Technology Solutions/Southern California Edison
Subcontractors: Metropolitan Water District of Southern California : Orange County Water District : University of California, Riverside : Innovatech Corp. : Utility Technology Associates : Electric Power Research Institute (EPRI)
Contract Amount: $2,889,678
Match Amount: $13,936,267
Contractor Project Manager: Lory Larson (626) 812-7161
Commission Contract Manager: Wendell Bakken (916) 654-4042
Status: Completed

Project Description:
The purpose of this project was to develop electrotechnologies that can produce new supplies of reliable and affordable drinking water, reduce electrical use to deliver and treat that water, and reduce the environmental problems created by current treatment and transport processes. Six innovative electrotechnology-based water treatment processes were evaluated and eight specific tasks were developed to address the study objectives, which are:

1. Advanced oxidation processes.
2. Biological de-nitrification.
3. Solids removal technologies.
4. Salinity removal technologies.
5. Disinfection alternatives.
6. Solid processing techniques.
7. Energy and process assessment.
8. Technology transfer and process scale-up for commercial deployment.

This project supports the PIER Program objective of:

- Improving the environmental and public health costs/risks of California's electricity by avoiding electricity use and costs to transport water over long distances and by avoiding investments in long-distance water transfer projects.

Proposed Outcomes:

1. Evaluate two advanced oxidation processes: pulsed UV/hydrogen peroxide and ozone/hydrogen peroxide, for their effectiveness in removing methyl tertiary butyl ether (MTBE), perchlorate, and other synthetic compounds from surface water and groundwater supplies.
2. Demonstrate how biological denitrification helps reduce concentrations of nitrate in contaminated wells to acceptable limits so that these wells can be re-activated as drinking water sources.
3. Evaluate the performance of solids removal technologies for surface water, municipal wastewater, and agricultural drainage water as a pretreatment for salinity removal processes.
4. Evaluate the effectiveness of two, non-thermal desalination technologies for the demineralization of surface water, reclaimed water, and agricultural drainage water. The non-thermal desalination technologies to be evaluated are experimental membranes (reverse osmosis (RO) and nanofiltration (NF) membranes) and carbon aerogel capacitive deionization (CDI).
5. Evaluate the effectiveness of pulsed-UV irradiation and ozone as physical, post-filtration disinfection processes for the inactivation of viruses, bacteria, and protozoa.
6. Investigate the effectiveness of mechanical freeze-thaw conditioning to enhance the dewatering of waste-stream residuals (sludge) from both conventional and desalting water treatment processes.

7. Conduct energy assessments of municipal water and wastewater unit processes to determine their energy use and water quality processing characteristics and to identify areas for improvement through application of electrotechnologies.
8. Evaluate preliminary scale-up issues for pulsed-UV irradiation, microfiltration for solids removal and desalting membranes. More specifically, a larger pulsed-UV treatment chamber, a demonstration MF system, and new, large diameter reverse osmosis membrane elements will be designed and tested for large-scale water and wastewater applications.
9. Connect the results from the electrotechnology research conducted through this contract to the research and water utility industry which can apply the results to their own research and which can adopt the technologies into their water-utility operations.

Actual Outcomes:

1. Investigate Advanced oxidation Processes:
   - Objective: Study the effectiveness of Pulse UV for the reduction of bromate, MTBE, NDMA, perchlorate, and taste & odor.
   - Outcomes:
     1) Bromate reduction by Pulsed UV – no significant reduction in bromate at UV doses less than 100 mJ/cm2. When compared to the UV for 1-log10 inactivation of Cryptosporidium, Pulsed UV takes almost 1000 times UV dose for the same reduction of bromate.
     2) MTBE reduction by Pulsed UV and ozone/peroxide – without H2O2, a high UV dose (47,000 mJ/cm2) reduced MTBE by 87 percent adding 69 mg/L H2O2 lowered the required dose to 1600 mJ/cm2. These UV and H2O2 doses, however, are prohibitive in drinking water applications. At high MTBE concentration (2000mg/L), Ozone/peroxide (PEROXONE) removed substantially more MBTE than ozone alone. However, at the lower MBTE concentration (200 mg/L), ozone and PEROXONE performed similarly.
     3) NDMA treatment by Pulsed UV and ozone/peroxide – H2O2 addition did not improve NDMA removal. However, water quality parameters such as nitrate and turbidity presence could affect NDMA removal. Reduction of NDMA by ozone (at 5 mg/L) was minimal but was much greater (50%) with PEROXONE at the same concentration.
     4) Perchlorate reduction by Pulsed UV – no measurable perchlorate reduction was observed because perchlorate does not absorb UV light.
     5) Taste and odor reduction by Pulsed UV –Without H2O2, 10,100 mJ/cm2 applied UV (very high) dose was needed to reduce MIB and geosmin by 92 and 97 percent respectively. Adding 5.5 mg/L of H2O2, only 1,100 mJ/cm2 was needed to achieve comparable results.
   - Conclusions:

     1) Bromate reduction by Pulsed UV.
        - Bromate reduction was more efficient in laboratory waters (89 %) than natural waters (18%) for UV dose of 3,100 mJ/cm2 and 4,000 mJ/cm2 respectively.

     2a) MTBE reduction by Pulsed UV.
        - UV alone cannot effectively reduce MTBE.
        - UV/H2O2 is effective in reducing MTBE.
        - H2O2 dose strongly affects efficiency of MTBE reduction.

     2b) MTBE reduction by Ozone and PEROXONE.
        - PEROXONE was more effective in oxidizing MTBE than ozone, particularly when water contained higher MTBE concentrations.
        - Ozone doses of 19 mg/L (with 47 mg/L H2O2) and 24 mg/L (with 30 mg/L H2O2) were needed to meet the secondary standard of 5 µg/L for 200 and 2,000 mg/L of MTBE, respectively.
        - MTBE by-products such as TBF, TBA, acetone, and aldehydes were identified to have hindered MTBE removal efficiency.

     3a) NDMA Reduction by Pulsed UV.
        - UV alone is effective in removing NDMA.

- Characteristics of water type played an important role for NDMA reduction.
- NDMA removal was affected by a strong competition for UV light absorption between NDMA and background organics (e.g., TOC and UV254-absorbing organics) and nitrate.

3b) NDMA reduction by Ozone and PEROXONE.

- Ozone alone is ineffective in NDMA reduction in drinking water.
- PEROXONE improved NDMA removal efficiency compared to ozone alone.

4) Perchlorate reduction by Pulsed UV.

- Perchlorate was not reduced by UV.
- Perchlorate concentration, H2O2 dose and pH had no effect on perchlorate reduction.

5) Taste-and-Odor Compounds.

- A UV dose of 10,100 mJ/cm2 reduced MIB and geosmin by 92 and 97 percent, respectively.
- 100 mJ/cm2 (a disinfection-level UV dose) and 5 mg/L H2O2 provided 86 and 96 percent reduction of MIB and geosmin, respectively.

- Recommendations: Based on water quality issues and cost requirements, one of the technologies evaluated here could be applied for reduction of water contaminants. Although ozone may be significantly less energy-intensive than UV for several of the micropollutants studied, UV may be a more appropriate option based on DBP formation potential. In considering these technologies, utilities must weigh energy and DBP costs prior to implementation.
- Benefits to California: It is beneficial for California utilities to understand the limitations of advanced treatment techniques before implementation. As UV light may provide excellent disinfection efficiency and low DBP formation at disinfection-level dosages, high-energy requirements for micropollutants treatment may cause water utilities to consider ozone. Utilities must, however, consider the level of DBPs that high ozone dosages may produce.

2. Biological Denitrification.
   - Objectives:
     1. Demonstrate the technically and economically viability of biological denitrification.
     2. Obtain California DHS approval for the BioDenTM system as a viable treatment system for nitrate removal and potable water production.
     3. Demonstrate ceramic filtration is a viable post treatment for biological denitrification.
     4. Determine O&M costs for biological denitrification unit using hollow fiber microfilter, including power consumption and methods to reduce power requirements.
   - Outcomes: In 1995, the City of Modesto purchased the Grayson water system from Del Este. The water supply is valuable to the City, but the water is contaminated with excess nitrates. The City was interested in assessing biological denitrification as a low-cost option to the more conventional treatment possibilities. Significant progress was made in implementing the demonstration project described in this report. However, at the end of 2000 the City decided to delay the commercial demonstration project in favor of drilling a new 1,000 feet deep well to obtain water with nitrates below the regulatory action level. EPRI and the researchers would like to see the demonstration project be launched in the next 3 to 6 months.
   - Conclusions:
     1. On December 20, 2000, the City of Modesto officially notified the researchers at Nitrate Removal Technology of its decision to postpone the Grayson Biological Denitrification Project. Instead, the City would install a 1,000 feet deep well in the area of the Grayson system to obtain water with nitrate below the government action level. The City staff was extremely reluctant to use microbes to accomplish a potable water treatment goal, even with post disinfection of the effluent. This potential health concern was the roadblock that must be overcome before the technology can be commercialized.

2. While EPRI and the researchers were disappointed with the City's decision, the team was able to secure approval from the California Department of Health Services for a suitable test protocol for this process. As designed, the protocol will yield valuable information for the Department to rule on the efficacy of the biological denitrification treatment system.
3. Based on discussions with California Department of Health Services and other interested parties, the Modesto pilot study will be conducted in two phases. The first phase will consist of a one to three-month demonstration of a 6 to 10 gpm pilot system to evaluate water quality, denitrification achieved, and the impact on filtration. During Phase 2 of the study, a demonstration system capable of treating 300 gpm or more will be installed and operated to develop detailed cost data on the process. Preliminary estimates suggest that biological denitrification compares quite favorably to both ion exchange and reverse osmosis, which are the two technologies used to remove nitrates today.

- Recommendations: Biological denitrification should be further pursued for nitrate removal and reactivation of contaminated shut-in wells. Commercial demonstration and public awareness should be the continuing focus of this technology. Biological denitrification are estimated to be equal to or less than conventional treatment options such as ion exchange and reverse osmosis. The broad range in costs for the conventional treatment technologies ($0.55 to $ 5.20 per thousand gallons treated) is the result of brine disposal costs and electricity costs, which vary depending on the location. In California, these disposal costs and power costs are expected to be on
  the high side of these ranges. Recent California's power shortage issues may limit the application of ion exchange and reverse osmosis from near-term commercial deployment.
- Benefits to California: Given the tremendous difficulties of removing nitrate from potable water supplies using conventional treatment processes, biological denitrification is a potentially attractive alternative. This innovative process can significantly reduce disposal concerns as well as permitting and infrastructure buildups. Reactivation of shut-in wells due to nitrate contamination can be a viable source of supply water both for local communities and new developments.

3a. Solids Removal Technologies MWD Study.

- Objectives:
  1. Evaluate pilot-scale conventional treatment with and without ozone/ biofiltration, and microfiltration processes as the pretreatment step to
     RO desalting.
  2. Evaluate full-scale conventional treatment as the pretreatment step to
     RO desalting.
  3. Model the cost savings associated with a 100 mgd desalting plant using conventional treatment (both with and without ozone and biologically active filters) versus microfiltration as the pretreatment step.
- Outcomes:
  Pilot-Scale Testing.
  1. Microfiltration produced water containing lower particle counts, turbidity, and silt density index (SDI) than either conventional treatment or conventional treatment with ozone/biofiltration.
  2. Pretreatment using conventional treatment showed the poorest RO performance in terms of maintaining stable flux over time, followed by conventional treatment with ozone/biofiltration, and finally microfiltration. Salt rejection of the membranes for all three pretreatment technologies ranged from 97 to 99 percent.
- Outcomes:
  Full-Scale Testing With Aluminum Sulfate.
  1. Five different RO membranes were tested using alum coagulation and chloramines. Results revealed rapid deterioration in specific flux as well as progressive reductions in salt rejection with Ferric Chloride.

2. Instead of declining as in alum coagulation, the specific flux using ferric chloride and chloramines increased over time for all membranes. However, salt rejection for each membrane decreased significantly during testing.
3. Preliminary cost estimates showed that existing conventional treatment plant was the lowest cost option ($0.39/1000 gal of finished water). MF showed 10 percent higher cost ($0.44/1000 gal) due to additional pretreatment facilities needed. The addition of ozone and biological filtration lowered the RO capital costs, but increased the overall treatment costs to $0.52/1000 gal, due to need for new pretreatment equipment.

- Conclusion:
  Pilot-Scale Results.
  1. Microfiltration provided the highest quality and lowest cleaning frequency water to the RO process. Conventional treatment required chemical cleaning three times in three-month test period due to organic and biological fouling. Performance was improved with the addition of pre-ozonation and biologically-active filters.
- Conclusion:
  Full-scale Results.
  1. Testing with full-scale conventional drinking water treatment showed differing results. Conventional treatment using both aluminum sulfate and ferric chloride coagulation showed adverse membrane performance which could hinder full-scale RO implementation. However, salt rejection was largely unaffected.
  2. The addition of either ozone and biological filtration or MF lowered the RO capital costs, but increased the overall treatment costs due to the need for new pretreatment equipment.
- Recommendations:
  1. Additional applied research is needed to optimize the conventional treatment process with and without ozone/biofiltration. A better understanding of the improved performance under the ozone/biofiltration pretreatment and its effects on the NOM of the water are needed. Additional work is also needed to better understand the full effects of interaction of different chemicals such as: coagulants (i.e. ferric, alum), disinfectants (i.e. chloramines), and antiscalants on the surface of the membrane.
  2. Microfiltration is the optimal pretreatment technology to provide the best feed-water for RO membranes with minimum fouling. However, additional work with conventional treatment processes may help water treatment plants use existing infrastructure as pretreatment to RO, thereby saving capital costs.
- Benefits to California: Study results will enable local municipalities to adopt desalination technologies to treat current and previously unusable potable water supplies. Economic benefit is the reduction of societal damages to the public and private sectors due to high salinity of the Colorado River water (CRW). An additional benefit is the reduction of energy needed to reduce TDS of the CRW over currently available technologies. Technologies evaluated in this task may also be applicable to other source waters in California.

3b. Solids Removal Technologies OCWD Study.

- Objectives:
  1. Investigate microporous membrane module potting technique, membrane symmetry, fiber modulus of elasticity, fiber thickness, module flow pattern (inside-out or outside-in), and membrane material.
  2. Develop mathematical modeling using structure-fluid interactions with analysis of membrane failure made to test performance at OCWD pilot- and demonstration-scale facilities.
- Outcomes: SEMs images were created for the five membrane fibers. Tensile testing results of the hollow fiber membranes was performed. A structural and a fluid model of a dynamically potted module with an elastomer overlay were developed using the symmetry, thickness, and strength data.
- Conclusions: Correlations between membrane and module properties and membrane fiber failure (i.e., loss of integrity) were difficult to make because only two membrane fibers (the PM100s and PVDF fibers) underwent both materials testing and performance testing.

Preliminary modeling results found the existence of additional stresses at the fiber/potting juncture which might possibly lead to the formation of fractures.

- Recommendations: Future efforts should include evaluations of immersed hollow fiber membranes and the impact of backwashing (using both air and water) on hollow fiber membrane integrity. The current model for pressure-driven membranes could be modified to evaluate suction-driven membranes or to evaluate the effects of air and water backwashing. Similar to the current investigation, results from the modified structure-fluid model would be combined with analysis of membrane failure for OCWD membrane systems.
- Benefits to California: Preventing microporous fiber breakage will have a significant effect on water treatment and wastewater reclamation in California and throughout the world. The performance of reverse osmosis membranes in indirect potable reuse and the efficacy of disinfection processes (chlorination and ultraviolet irradiation) in direct non-potable reuse are directly dependent on MF and UF fiber integrity.

4a. Salinity Removal Technologies MWD Study.

- Objectives:
  1. Investigate the performance of experimental RO membranes and NF membranes.
  2. Evaluate long-term fouling rate of RO membranes using conventionally pretreated water.
  3. Determine potential cost savings using experimental membrane flux and salt rejection data.
  4. Evaluate various commercial and generic antiscalants to prevent scale formation during RO treatment of Colorado River water.
- Project Outcomes:
  1. Of the five RO membranes evaluated, RO1 (Dow Separation Processes, FilmTec Enhanced LE) provided the highest specific flux (0.37 gfd/psi) while still maintaining high salt rejection (98.8 percent). Performance data for NF membranes provided a wider range of variation in water production and salt rejection properties than RO membranes. NF membrane NF1 (Dow Separation Processes, FilmTec NF90) showed comparable specific flux and salt rejection to that of RO1.
  2. Ion hydrated radius and solution pH had a direct impact on the salt rejection behavior of NF membranes. Generally, as the hydrated radius increased (e.g., from sodium to sulfate), the rejection of that ion also increased. Additionally, operation at low pH conditions increased NF membrane salt rejection through chemically tightening of the membrane surface.
  3. All four experimental RO membranes have overall membrane system costs at least 15 percent lower than commercially available RO membranes. Two of the NF membranes tested demonstrated superior performance in specific flux and salt rejection over a current commercially available ultra-low-pressure RO membrane, resulting in 19 and 14 % cost savings, respectively.
- Conclusions:
  1. With the development of polyamide membranes, not only has the operating pressures for membrane systems decreased, but the water production per psi has also increased substantially.
  2. NF membranes operate at significantly higher flux rates than RO membranes, but exhibit poorer salt rejection.
  3. Closed-loop membrane testing, while inexpensive, may not provide representative water quality conditions and single-pass, multi-array membrane systems are not only expensive but have high water flow rate demands (up to 20 gpm).
- Recommendations:
  1. Further research is needed to wed the high water production of NF membranes with the high salt rejection of RO membranes. Next generation membranes that are either chlorine tolerant to prevent biofouling or exhibit unique surface charge characteristics to prevent particle and bacterial adhesion, or even scaling should also be developed.
  2. Smaller, single-pass membrane test systems need to be developed.

3. A standardized protocol needs to be developed for interpreting RO membrane and water quality data to judge antiscalant effectiveness.

- Benefits to California:
  1. Results from this study will enable local municipalities to adopt desalination technologies to treat currently and previously unusable potable water supplies.
  2. The primary economic benefit is the reduction of societal damages to the public and private sectors due to high salinity of Colorado River water. An additional benefit is the reduction of energy usage to reduce the TDS of CRW over currently available technologies.

4b. Salinity Removal Technologies OCWD Study.

- Objectives: The objectives of this research were to study RO membranes' performance for salinity removal using different materials as well as feed sources. Part of research also examined treatment methods and options for the brine concentrate generated from the process. Specifically the objectives address:
  1) Studying and developing new RO membranes that are resistant to chlorine.
  2) Investigating nitrification and denitrification of RO brine (waste).
  3) Testing the RO and MF processes on the wastewater treatment side.
- Outcomes:
  A. Chlorine Tolerant Membranes.
     1. Chlorine tolerant membrane performance was found to be equal, or superior to traditional commercial RO membranes.
     2. Water quality was comparable while the total product water production was generally greater than the commercial membranes. The rate at which water production (or flux) declined was also lower than the commercial membranes.
     3. Commercial TFC membranes in the marketplace lack chemical tolerance to such oxidants as chlorine.
  B. Brine Disposal.
     1. The FBBR-GAC system has proven very efficient both in terms of process and energy consumption for the denitrification and sulfate reduction of brine concentrates. The optimum operating parameters were determined in this research.
     2. Preliminary laboratory-scale experiments revealed that the FBBR-GAC process is capable of removing approximately 45% of sulfate and 100% nitrate.
  C. IMANSTM.
     1. Initial testing of the IMANSTM process for wastewater treatment combined with water reclamation has shown promising results in sustainable performance and cost effectiveness.
     2. Potential capital cost and significant O&M cost savings are predicted for an IMANSTM approach compared with the conventional membrane approach for treatment of secondary wastewater effluent.
     3. This established the technical feasibility of the IMANSTM process combination, even under challenging test conditions such as use of a six-year-old MF pilot.
- Conclusions and Recommendations.
  A. Chlorine Tolerant Membranes.
     1. Conclusions:
        - CPTC membrane was equal or superior to traditional commercial membranes for long-term performance.
        - CPTC membrane looks promising as a membrane that could successfully treat high fouling water sources without compromising membrane integrity and performance due to fouling and chemical degradation.
     2. Recommendations:

- The successful development and widespread implementation of a new polymer membrane is a timely process.
- More testing will be required to determine the practicability of this membrane as an alternative to conventional TFC membranes in treating high fouling water and wastewater sources.

3. Benefits to California:
   - The use of highly efficient, low fouling membranes would ultimately increase product water throughput while minimizing associated treatment costs.
   - TFC polyamide membranes operate at lower operating pressures than cellulose acetate membranes, which can translate into significant energy savings of 30% to 40%. Using a lower pressure TFC membrane that exhibits fouling resistance would further reduce energy costs.
   - Less biofilm proliferation and accumulation on the membrane surface would result in lower operating pressures and subsequently lower energy costs.

B. Brine Disposal.

1. Conclusions:
   - The optimum temperature range for the denitrification was determined to be between 20°C and 40°C.
   - The total dissolved solid (TDS) concentration had insignificant effect on the denitrification rate.
   - Preliminary laboratory-scale experiments revealed that the FBBR-GAC process is capable of removing approximately 45% of sulfate and 100% nitrate.
2. Recommendations:
   - The FBBR-GAC process needs to be further investigated in laboratory and pilot scales relative to energy efficiency and cost-effectiveness.
   - More investigation is needed to upgrade the system for better sulfate removal.
   - A model and detailed experimentations need to be developed for biological removal in dual-substrate systems (nitrate and sulfate).
3. Benefits to California:
   - Water recycling is foreseen as one of the best alternatives to meet the ever-increasing water demand in Southern California. It is through recycled water that the depleted groundwaters are replenished, saline water intrusion from the ocean is prevented, and surface water supplies are augmented.
   - The Fluidized Bed Biofilm Reactor with Granular Activated Carbon technology has been proven to be very effective in the treatment of the RO brine concentrates. One notable advantage of fluidized bed reactors is that they require minimal space, and is relatively small as compared to conventional systems because of excessive biomass growth.
   - The reaction time is short and the treatment efficiency is high, making it easily adoptable by the utilities planning to employ the RO technology to recycle water in residential areas where land availability is scarce or limited.

C. IMANSTM

1. Conclusions:
   - The initial testing of the IMANSTM process approach for wastewater treatment combined with water reclamation has shown promising results in terms of sustainable performance and cost effectiveness.
   - Potential capital cost savings and significant O&M cost savings are predicted for an IMANSTM approach compared with the conventional approach of using membranes to treat secondary wastewater effluent.

- Elimination of the secondary wastewater treatment step, lower life cycle costs, 50 percent less solids production, and smaller plant footprint, all establish the potential benefits of this new approach to wastewater treatment and reclamation using membrane filtration on primary wastewater effluent.

2. Recommendations:
   - Research is needed to study how other configurations of MF units could treat primary effluent.
   - It is equally important to establish communication with the regulatory agencies to discuss possible alternatives for reuse and discharge prior to commercial development.
3. Benefits to California: This research and demonstration testing could significantly alter the manner in which wastewater agencies discharge waste effluent into the ocean or any other water body. By evaluating the microfiltration process as a means of disposing primary effluent, alternate methods can help better mange waste discharges.

5a. Investigate Disinfection Alternatives MWD Study.

- Objectives:
  1. Evaluate ability of heterotrophic bacteria to repair or regrow following UV treatment.
  2. Compare disinfection effectiveness of pulsed UV and medium-pressure UV lamps against single-stranded RNA virus MS-2.
  3. Evaluate disinfection effectiveness of UV lamps against two organisms, phi-6 and Bacillus subtilis.
  4. Determine ability of Cryptosporidium parvum to self-repair infectivity after exposure to UV light.
  5. Determine disinfection effectiveness of UV light against Giardia lamblia, protozoan pathogen found in drinking water.
- Outcomes:
  1. UV light at 20 mJ/cm2 produces equivalent effect on heterotrophic bacteria as chlorine (1 minute contact) and chloramines (61 minutes contact). The three treatment techniques each provided more than 3.5 log10 inactivation of bacteria.
  2. UV was effective in disinfecting three organisms: B. subtilis aerobic spores, MS-2 coliphage, and phi-6 bacteriophage, with a dose of 40 mJ/cm2 providing 1.9, 1.5, and 2.0 log10 inactivation, respectively.
  3. Study results found that a very low UV dose of 1.4 mJ/cm2 would provide a 2 log10 inactivation of G. lamblia.
  4. Experiments were conducted to determine if a conventional medium-pressure UV lamp and a pulsed-UV lamp could effectively inactivate heterotrophic bacteria, B. subtilis, MS-2, phi-6, and C. parvum. Across all the experiments for disinfection, there appears to be no significant difference in the results obtained when using one lamp or the other.
  5. This study also evaluated the effects of UV only, compared with the effects of UV followed by addition of chloramines, on the biological stability of treated samples. Study results showed that regrowth occurs within a 3-day period with UV dose alone of up to 60 mJ/cm2. However, when treated with 20 mJ/cm2 UV dose followed by a chloramine dose of 2.6 mg/L, the samples remained biologically stable for at least 7 days.
- Conclusions:
  1. The protozoa and heterotrophic bacteria were more susceptible to UV light, with dosages of less than 20 mJ/cm2 providing 2 log10 inactivation. Organisms more resistant to UV light were the double-stranded RNA virus phi-6, followed by B. subtilis and then the single stranded RNA virus MS-2. For these organisms, a UV dose between 40 and 53 mJ/cm2 was required to provide 2 log10 inactivation. The disinfection provided by UV on the human pathogen G. lamblia was even more effective than previously reported for G. muris, a more easily handled rodent parasite.

2. This task study shows that the process of using UV light to control post-filtration heterotrophic bacteria would need to be followed by a residual disinfectant such as chlorine or chloramines to provide a water with biological stability.
3. The disinfection provided by either a medium-pressure, continuous-wave UV lamp or an innovative pulsed-UV lamp was similar when compared, on an equivalent UV dose basis. Both lamps were effective in the treatment of C. parvum, but it could not be determined whether or not C. parvum could repair itself following UV treatment.

- Recommendations:
  1. Future studies should determine if C. parvum repair mechanisms may exist after UV treatment.
  2. To better quantify effects of organism repair in future studies, it would be beneficial to wait until improvements in C. parvum infectivity assays are made to reduce variability.
  3. Future research must complement the bench-scale data by evaluating the process efficiency and hydraulic characteristics of large-scale UV reactors.
- Benefits to California: UV disinfection is fast becoming a great benefit to California water treatment utilities. However, recommendations stated above should be followed before implementing large-scale UV technology. Although the process shows to be viable at the bench-scale, large-scale application for on-line monitoring are still in development and should be evaluated before implementing the technology as a reliable barrier to waterborne human disease and illness.

5b. Investigate Disinfection Alternatives OCWD Study (Disinfection Alternatives).

- Objectives:
  1. Evaluate the low-pressure high-intensity open channel UV system to demonstrate compliance with the California Reclamation Criteria" and to meet Title 22 standards.
  2. Determine the efficiency of UV disinfection for inactivation of protozoa.
  3. Establish dose curve for pulsed UV and compare the performance of pulsed UV for disinfection of microorganisms using various water matrices.
- Project Outcomes:
  1. Evaluation of Wedeco-Ideal Horizons TAK 55 System – The TAK 55 system was found to be most effective when used with three banks in series and when the flow rate was limited to 17 gpm / lamp. The system proved to be successful in meeting the criteria established by State of California Title 22 Wastewater Reclamation Criteria.
  2. Efficiency of UV for Protozoa Inactivation – The use of collimated beam apparatus proved that UV is effective for inactivation of protozoa species including Giardia muris and Bacillus subtillus. It was found that the low pressure, high intensity collimated beam apparatus was most efficient but that all three systems were equally effective.
  3. Evaluation of Pulsed UV – The pulsed UV system was originally designed to treat surface water sources, but was shown to be successful for the disinfection of treated wastewater. The addition of a baffle system to the pulsed UV eight inch diameter treatment vessel proved to be key to the system's effectiveness.
- Conclusions:
  1. Ultraviolet disinfection is an important technology for reclamation projects.
  2. Low-pressure, high-intensity open channel UV systems were effective for meeting California's Title 22 reclamation criteria.
  3. Ultraviolet technologies of varying types: pulsed, low pressure-high intensity, and medium pressure were effective for the inactivation of protozoa.
  4. Pulsed UV technology had comparable effectiveness to conventional UV for the disinfection of various microorganisms in various water matrices.
- Recommendations:
  1. Evaluation of Wedeco-Ideal Horizons TAK 55 System – The testing of the Wedeco-Ideal Horizons TAK 55 lamp technology has proven that this technology is viable for meeting the disinfections standards set by the California Title 22 guidelines for wastewater

reclamation. It is recommended that this system be considered for use in future or current municipal reclamation projects.

2. Efficiency of UV for Protozoa Inactivation – Tests need to be run using G. muris as an indicator organism for evaluation on a pilot scale UV system without having to lower the transmittance to an unreasonable level. It is also necessary to find a way to keep the G. muris from sticking to the plastic batch tank and the plastic PVC pipes which are connected at the influent and effluent ends of the pilot UV units.
3. Evaluation of Pulsed UV – The next step that should occur would be to test the pulsed UV 8" diameter pilot unit on membrane treated wastewater.

- Benefits to California:
  1. The testing could lead to certification of the Wedeco-Ideal Horizons TAK 55 technology by the California Department of Health Services for use in Title 22 reclamation applications. The certification of this technology should lead to an increase in options for agencies that are in need of disinfection technologies for reclamation projects.
  2. Completing this task has benefited California in that it shows that low levels of UV radiation are able to disinfect harmful protozoa. This allows other agencies to use UV technology in place of conventional disinfection technologies, which may be more expensive or may create unwanted disinfection byproducts.
  3. The benefits to California are that there is now documented research and pilot demonstration to show that pulsed UV technology can be applicable to disinfection for reclamation applications.

6. Investigate Solids Processing Techniques.

- Objectives:
  1. Evaluate the economics of using the BIOFREEZETM unit for conditioning water treatment plant residuals.
  2. Determine if biological wastewater residuals can obtain the same separation rate as inorganic water treatment plant residuals.
  3. Evaluate the economics of using BIOFREEZETM for conditioning waste-water residuals.
  4. Evaluate freeze concentration of reverse osmosis brine to determine if separation of salts can be achieved.
- Outcomes: The purpose of this study was to evaluate the effects of freeze-thaw technology on water and wastewater residuals. All testing took place at OCWD in Fountain Valley, CA, on specific residuals of the following types:
  1. Alum Sludge from a water treatment plant.
     - Volume Reduction -- The F/T conditioning process reduce sludge volume by an average of 16 percent, with a range of 6 to 26 %.
     - Supernatant Quality --The solids concentration of the supernatant, collected after gravity thickening for 2 hours, ranged from 650 to 930 mg/L which were higher than EPRI's previous reports ranging from 100 to 375 mg/L.
     - Gravity-Thickened Solids Concentration – The solids content of the gravity-thickened sludge ranged from 11 to 12.5 percent which were similar to previous EPRI studies.
     - Dewatering Using A Belt Filter Press – The solids concentration of gravity thickened solids dewatered on a pilot-scale belt filter press, ranged from 22.3 to 26 percent which were also similar to those reported by EPRI.
  2. Ferric Chloride Sludge from MWD's water treatment plant.
     - Volume Reduction -- The F/T conditioning reduce residuals volume by 45 to 81 percent.
     - Supernatant Quality -- The solids concentration of the supernatant, collected after gravity thickening, ranged from 930 to 1,070 mg/L.
     - Gravity-Thickened Solids Concentration -- The solids concentration of the gravity-thickened sludge had a percent solids range of 10 to 16 percent.
     - Dewatering Using Belt Press -- The solids concentration of sludge dewatered on a belt filter press ranged from 22 to 32 percent.
  3. Biological Sludge from OCWD's wastewater plant thickened activated sludge (TWAS).
     - The DAF-thickened TWAS had a solids concentration of approximately 8 percent. Unlike the inorganic sludges, the sludges subjected to F/T conditioning in this study were not reduced in volume.
  4. Brine from OCWD's wastewater plant's MF and RO treatment.
     - The freeze concentration (FC) pilot testing produced ice with TDS concentrations which ranged between 2757 and 5100 mg/L, and averaged approximately 3800 mg/L.
     - Volume Reduction -- For the FC test runs, the influent brine volume was reduced between 24 and 89.6 percent.
     - Power Requirements -- Power consumption for these test runs ranged between 3.3 and 15.1 kWh. Power consumption per ton of product frozen varied between 118.7 and 393.6 kWh per ton. For a commercial F/T system, the power consumption should range between 24 and 40 kWh/ton.

- Conclusions:
  1. Mechanical F/T is extremely effective at reducing inorganic residual volumes, achieving up to a 94% reduction.
  2. Mechanical F/T of the wastewater biological residuals collected for this study did not produce the high level of separation achieved with the inorganic sludges.
  3. FC of RO brine did produce a concentrating effect, and reduce the volume of concentrated brine for disposal. Results of the testing did not appear to achieve low concentrations of TDS in the ice (average ice TDS, 3260 mg/L expected ice TDS, 500 mg/L).
  4. Most of the power data collected during this study was inaccurate due to the BIOFREEZETM unit not being insulated.
  5. The economic analysis of the freeze/thaw method appeared to be cost competitive with conventional treatment of water residuals.
- Recommendations:
  1. Additional demonstration testing needs to be completed to verify the results of previous testing. The testing should concentrate on the thickening step to verify the assumptions used in this report.
  2. Capital costs are a significant obstacle for application of F/T. It is recommended that additional freezing systems be evaluated to determine if the capital costs can be reduced.
  3. For the biological sludges, the BIOFREEZETM system appears to be able to provide substantial benefits to anaerobic digestion. Further testing needs to be completed to confirm that increased methane production can be achieved and to what extent dewaterability of the sludges can be expected.
- Benefits to California: The freeze-thaw process can be used to condition the biological residual before anaerobic digestion. The benefits to California from the use this technology include:
  1. Increased methane generation capacity.
  2. Increased dewaterability of sludge.
  3. Reduce the amount of salt to be disposed in landfills from microfiltration-membrane treated wastes.
  4. Reduce the amount of salt from chemically treated wastes to be disposed by ocean discharge.

7. Perform Energy and Process Assessment.
   - Objectives: To conserve energy, reduce chemical use, and improve energy efficiency by using an integrated approach to energy and process assessment at four selected municipal water and wastewater treatment facilities.
   - Outcomes: This task surveyed and summarized the findings at four water and wastewater treatment plants in California:
     1. San Francisco's Harry Tracy water treatment plant.
     2. Metropolitan Water District's Jensen filtration plant.
     3. Union Sanitary District's wastewater plant.
     4. Vallejo Sanitation and Flood Control District's wastewater plant.

     Energy consumption and cost for each plant were determined based on plant flow and energy billings and demand usage. Energy conservation measures (ECMs) were developed at each plant. For the water plants, the ECMs include three lighting retrofits to improve efficiency and control, an energy management systems, load shedding three systems during peak hours, modifications to improve the equipment efficiency of three processes, and an HVAC change to reduce cooling. For the wastewater treatment plants, the ECMs include two lighting retrofits to reduce lighting and improve control, two energy management systems, operational changes to two processes, modifications to two non-potable water systems to reduce load, equipment modifications to improve efficiency, load shedding during peak hours, changes to a cogeneration system, and a change to a discharge permit to lower demand.

- Conclusions: Eleven energy conservation measures (ECMs) at the water plants and twelve at the wastewater plants were identified through this task. These ECMs are estimated to save 8,533,854 kWh annually, which produces a cost saving of approximately $564,580. The ECMs are summarized below:

Type of ECM	No.	Energy Savings (kWh)	Annual Cost Savings	Potential Rebates	Estimated Capital Cost	Recommended
Lighting Retrofits	5	51 kW 402,924 kWh	$27,180	$39,826	$74,000	YES
Energy Management System	3	420 - 480 kW 0 kWh/yr	$37,300		$65,000	YES
Load Shifting	4	501 kW 58,500 kWh/yr	$49,800	$5,625	$3,000	YES
Equipment Modifications	4	362 kW, 941,810 kWh/yr	$54,800	$114,595	$50,250	YES
HVAC Changes	1	0 kW, 72,000 kWh/yr	$3,700		$2,000	YES
Operational Changes	2	75 kW 803,000 kWh	$44,800	$35,640	$30,000	YES
Modify NPW System	2	19 kW 762,120 kWh	$42,000	$91,090	$42,000	YES
Cogen Changes	1	600 kW 4,600,000 kWh	$254,000	$180,000	$205,000	YES
Permit Changes	1	127 kW 893,500 kWh	$51,000	$80,415	$150,000	YES
Total of Recommended ECMs			$564,580	$547,191	$621,250	

- Recommendations: It is recommended to implement the ECMs identified in this project and to conduct new studies at other facilities throughout the state to further reduce electrical demand and conserve our natural resources.
- Benefits to California: The State of California benefits by the significant energy savings, conservation of natural resources, reduction in pollution, minimized costs, and improved quality of treatment which thereby protects the environment.

8. Scale-up Issues MWD Study.
   - Objectives:
     1. Evaluate preliminary scale-up issues by assessing operational and water quality needs that impact design criteria for construction of a large-scale UV systems.
     2. Conduct biodosimetry challenges to characterize performance in terms of transferred UV dose (UV dose measured at the bench-scale).
     3. Monitor UV reactor over a period of testing to evaluate process performance.
     4. Determine the element productivity, ion selectivity, fouling potential, and cleaning cycle of a 16-in. and an 8-in.-diameter RO elements.
     5. Perform economic analysis of a full-scale RO plant utilizing 8-in. versus 16-in. diameter elements.
   - Outcomes:
     1. It is possible to increase the output of a MF module by increasing the surface area without increasing the module cleaning requirement.
     2. Adequate contact time during pre-chlorination is essential for the control of microbial fouling of the membrane surface.

3. The overall process recovery of the full-scale Pall microfiltration system was found to be 90% at a flux of 24 gallons per square foot per day and a backwash interval of 15 minutes.
4. The optimum cleaning procedure involved a caustic cleaning with a 2% sodium hydroxide solution and 5000 ppm chlorine followed by a acid cleaning using a 2% citric acid solution.
5. The amount of energy required by the full-scale Pall microfiltration system is 400 kWh per million gallons of water treated.
6. It is possible to operate a full scale system with some exposure to direct sunlight. Over the course of a year and a half, no deterioration was found on either the coated or the uncoated modules.

- Conclusions:
  1. To meet the requirement established by OCWD for a three-week interval between chemical cleanings, an ideal process recovery for the full-scale MF system of 90% was established. The process recovery for the Pall MF system is largely dependant on the interval setting between the air scour and reverse flush processes. The settings of 22-minute interval established as part of this testing could be applied to other wastewater reclamation installations.
  2. The cleaning procedure for the Pall MF system can be varied by the amount, re-circulation time and soak time of the chemical. It was important to establish an effective cleaning protocol to meet the required three week cleaning interval. The caustic portion of the cleaning was found to be more important than the acid portion, because majority of the fouling was found to be organic and not inorganic (mineral scale) fouling. This resulted in a nearly ten hour caustic solution re-circulation requirement as opposed to two hours of the
     acid re-circulation.
- Recommendations:
  1. Continued testing is needed at the established process settings to verify long term validity.
  2. Microfiltration membrane integrity needs to be observed over a long-term period and testing using established cleaning procedure from this research be continued. Also, the procedure established here could be easily adjusted for other installations where water quality may differ.
  3. The power requirements established during this testing should be further compared with those established elsewhere for MF processes as well as with other conventional treatment technologies such as chemical clarification or multi-media filtration.
- Benefits to California: The benefit to California is the establishment of microfiltration technology as a viable alternative for large-scale wastewater reclamation. The use of MF technology will allow for greater reclamation to occur and reduce California's dependence on imported water sources. In most cases the land required for MF is several times smaller than that of current reclamation treatment processes. This testing has established a good estimate of the power requirements of MF technology for wastewater reclamation.
- Outcomes:
  1. UV Disinfection.
     - Biodosimetry challenges were conducted with MS-2 coliphage. Challenge results coupled with weekly monitoring of inactivation of heterotrophic bacteria showed that the UV reactor provided adequate disinfection of biofilter effluent. With 2 to 4 lamps on, bacteria were consistently reduced by more than 3 log10.
     - Study evaluated correlation between sensor and calibrated radiometer readings. Results indicate a linear relationship between the two. However, this relationship needs to be further characterized over a wider range of water quality (e.g., turbidity from 0.1 to 10.0 NTU) to understand sensor reliability for both filtered and unfiltered water applications.
     - Although this study showed successes in microbial challenges of the UV reactor, results will need to be verified at larger scales. Alternatives to biodosimetry need to

be explored so that large California utilities may have other UV reactor dose-characterization options.

2. Large-Scale Reverse Osmosis Desalination.
   - A 16-in. diameter RO element was operated in parallel with a conventional 8-in. diameter element for over 2,500 hours. The specific flux of the 16-in. element (0.23 gfd/psi) was 20 percent lower than the average specific flux of the 8-in. element (0.28 gfd/psi). Both elements removed greater than 98 percent of the influent TDS. Differences in the performance were attributed to design issues associated with the 16-in. element.
   - The large-diameter 16-in. elements are estimated to reduce RO plant capital costs by nearly 24 percent and overall costs (capital costs and O&M costs) by approximately 10 percent. Brine disposal costs were not included in the analysis. The use of large-diameter elements also reduced the overall plant footprint which resulted in a 24 percent savings for the building costs, as well as savings on system-wide controls and electrical equipment.

- Conclusions:
  1. This study developed a cursory correlation between sensor readings and calibrated radiometer readings that showed a linear relationship over the range studied.
  2. Although this study showed successes in microbial challenges of the UV reactor, larger-scale reactors will require validation. Alternatives to biodosimetry need to be explored so that large California utilities may have other UV reactor dose-characterization options.
  3. Large-diameter RO elements look very promising in reducing RO desalination costs for large-scale applications. Evaluation of one of the first 16-in. diameter prototype elements revealed that inefficiencies in the design currently exist. Membrane manufacturers are expected to improve the efficiency of the 16-in. element as research progresses.
- Recommendations: Additional research is needed to study:
  1. The effects of water quality and water treatment chemicals on UV disinfection and alternatives to microbial biodosimetry in characterizing UV reactor dose. Characterization of sensor readings to a known standard (i.e., radiometry) should also be continued.
  2. A second-generation 16-in. diameter element is needed to eliminate the inefficiencies observed in the first prototype element. Improvements in membrane design and optimization of the pretreatment process will help improve membrane productivity and reduce fouling, which minimizes both capital and O&M costs. An important issue in the future is loading and unloading of membranes. A dry 16-in.-diameter element weighs approximately 200 lbs and when wetted, an individual element can weigh over 300 lbs.
- Benefits to California: UV treatment of drinking water could be a great benefit to California by allowing a relatively low-cost technology to provide enhanced disinfection and protection of public health. The development of large, 16-in. diameter elements will benefit the entire state of California by lowering the cost of desalination and reducing the energy requirements to treat brackish water. The successful development of these large-diameter elements will help to significantly lower cost of new, large-scale desalination facilities (greater than 100 mgd) by taking better advantage of economies of scale.

9. Technology Transfer.

As research breakthroughs and other important results were achieved, EPRI and AWWARF provided an aggressive technology transfer effort including publishing technical information bulletins, organizing general information seminars, and conducting research needs assessment workshops to disseminate research findings to the municipal water community and related industries.

The information bulletins presented technical concepts in a reader-friendly format, incorporating graphics and easy-to-understand tables and charts. Because it is extremely important to emphasize communication between agencies and the general public, general information

workshops were a major part of the technology transfer approach. The goals of the workshops were to present progress-to-date, exchange information, and obtain timely input. Three one-day workshops were held. The first workshop gathered input from industry experts, technology users, government agencies, and general participants to determine future workshop schedules and agendas. Workshop announcements, and a notification strategy, such as newspapers and trade journals, were proposed at the first workshop. Since research results often have a significant impact on the direction of future projects, the remaining two technical workshops were held to share technical information and provide feedback on research endeavors.

Project Status:
The Contractor presented the results at the CEC on January 17, 2002 on the project and the Final Report to Commissioners and staff. The complete final report will be posted on the PIER site in the Environmental Energy Research Program area.

HydrogenPinch™ Studies at the British Petroleum Los Angeles Refinery

Contract #: 100-98-001 **Project #:** 56
Contractor: Electric Power Research Institute (EPRI)
Subcontractors: Global Energy Partners, LLC : Linnhoff March Limited
Project Amount: $95,038
Match Amount: $95,038
Contractor Project Manager: Ed Fouche (919) 515-7550
Commission Contract Manager: Pramod Kulkarni (916) 654-4637
Status: Completed

Project Description:
The purpose of this project is to conduct a hydrogen management study based on HydrogenPinch™ technology at British Petroleum's (BP's) Los Angeles refinery in Carson, California. The study will identify process and equipment changes to improve hydrogen recovery in the most cost-effective way and minimize the hydrogen vented to refinery fuel gas. The results of this study will benefit California refineries by showing how improved hydrogen recovery can achieve capacity debottlenecking, improved energy efficiency, improved product mix, and reduced environmental impacts.

The effective management and efficient integration of hydrogen and off-gases are becoming increasingly important tasks for many of the world's oil refiners and petrochemicals producers. Legislation to reduce global emissions of greenhouse gases is enforcing the production of low-sulphur fuels with the result that hydrogen is in increasing demand in refineries.

This project supports the PIER Program objectives of:

- Improving and enhancing the energy cost/value of California's electricity by developing and demonstrating an energy efficient industrial program, pinch technology.
- Improving the environmental and public health costs/risks of California's electricity by ensuring the cost-effective production and supply of low-sulphur fuels to meet strict environmental standards.

Proposed Outcomes:
This project will conduct a hydrogen management study based on HydrogenPinch™ analysis at the host site. Based on this analysis, researchers will calculate the maximum hydrogen recovery potential, the minimum supplemental hydrogen required from other sources, and the amount of propane required to maintain the heating value of the fuel gas. With these results, investigators will develop a list of recommended capital projects and/or process changes to meet the economic and operating criteria established by the plant.

Actual Outcomes:
The project team conducted a site visit of the BP facility to define data that needs to be collected and to determine operating and economic constraints that need to be taken into account. Researchers used HydrogenPinch™ analysis to determine the optimum extent of hydrogen recovery and minimal supplementary hydrogen required for the plant. Significant improvements were identified in three key areas: PRISM operation, plant capacity, and feed purity. The maximum potential cost savings achievable by combining these projects was shown to be $4.5 million per year. In addition, further unquantified benefits could be realized in at least two hydroprocessing units due to an increase in purity of hydrogen supplies to those units. The global impact on the environment of California was shown to be positive by a 24,800 TPA reduction in CO_2 emissions. Results of the study were presented at a one-day seminar held on May 4, 2001 in Long Beach, California. Seminar participants were from California refineries, California utilities serving refineries, and consultants to the refinery industry.

Project Status:
The project has been completed.

Industrial Demonstrations

Contract #: 500-00-022 **Project #:** 4 & 5
Contractor: Gas Technology Institute
Project Amount: $150,000
Match Amount: $193,600
Contractor Project Manager: Steve Sikirica (847) 768-0859
Commission Contract Manager: Pramod Kulkarni (916) 654-4637
Status: Completed

Project Description:
The Forced Internal Circulation (FIR) burner will be demonstrated in a mesh belt furnace at the ITW CIW Stamping Plant's Santa Fe, California facility. This furnace contains 3 indirect heated zones containing 13 radiant U-tubes. Thirteen U-tube units (including burners and recuperators) will be removed and replaced with new U-tubes each fitted with GTI's FIR burner and a standard commercially available recuperator. Raising customer awareness of gas cooling opportunities.

Proposed Outcomes:
The following outcomes and deliverables are anticipated:

1. Development of FIR Burner for 6" Radiant U-Tube.
2. Field Demonstration.
   - Baseline Testing.
   - Installation of Burner System and Field Testing.
3. Evaluate and Prepare Technical Report.

Project Status:

- The first demonstration site of FIR was selected. It is a highly leveraged project that is funded by Mutual Fund Members (California Energy Commission, Dominion, and Energy West Inc.), GTI, Southern California Gas Company, California Air Resource Board's ICAT program, Eclipse Combustion (manufacturer), and ITW CPW Stampings (Sante Fe, CA) (host site).
- Task 1 for this project has been completed. GTI's FIR burner has been laboratory-tested and successfully proven to operate at or above desired levels when scaled up to accommodate a 6" radiant U-tube. Manufacturing drawings have been generated and approved with respect to the actual FIR burner to be installed at the demonstration site. Purchase Orders have been placed and manufacture has radiant tube manufacture has been completed and equipment delivered to the test site on September 20, 2002. The FIR burner equipment arrived at the test site on November 12, 2002. All equipment was inspected and accounted for and is safely being stored at the test site awaiting installation. This task has been completed.
- Task 2 (2.1): A full inspection of the test site and demonstration furnace at ITW CIP Stampings has taken place in order to set up the baseline testing. Baseline testing was conducted during the week of November 11, 2002. GTI analysis equipment was installed and three consecutive days of data collection followed. Analysis of these data has been completed and will serve as a comparison baseline reference in a case study of this demonstration project. This task has been completed.
- Task 2.2: Retrofit of the demonstration furnace with the FIR burner equipment was originally planned to occur during the test site's scheduled maintenance outage beginning December 20, 2002. However, ITW CIP Stampings experienced difficulties in securing the proper permits required to install the new FIR burner equipment. ITW is currently working with Yorke Engineering (consultants) to resolve any permitting issues and proceed with the installation. Due to the required lead time for securing these permits, installation of the FIR burner equipment was not possible during the planned December, 2002 outage. This outage still took place, as scheduled, to perform the miscellaneous furnace maintenance. After getting the approval of required permits, installation of the FIR burner equipment took place at ITW stampings Inc. in 2003. All the thirteen burners, recuperators, and radiant tube assemblies were installed and ITW stampings were happy with the results. (ITW Stampings cooperated fully throughout this project).

Power Quality for Customer Systems - Program 2

Contract #: 500-00-023 **Project #:** 30
Contractor: Electric Power Research Institute (EPRI)
Subcontractors: EPRI PEAC Corporation
Project Amount: $150,083
Match Amount: $591,559
Contractor Project Manager: Ashok Sundaram (650) 855-2304
Commission Contract Manager: Pramod Kulkarni (916) 654-4637
Status: Completed

2.004: Power Quality and Electromagnetic Compatibility Impacts on Robotics and Information Systems

2.005: Methodology for Determining Cost Recovery for "High Nine" Customers with On-Site Generation
2.007: Embedded Solution for Telecommunications and Internet Equipment
2.010: Advanced Flywheel and Ultracapacitor as Embedded Solutions for Advanced Machine Tools and Robotics
2.011: Cost Analysis and Reduction of Power Quality Mitigation Hardware
2.013: Power Quality and Powering E-Business Technology Watch

Project Description:
The purpose of this program is to provide the Commission with information about power quality concerns and mitigation techniques at commercial and industrial facilities, including those that rely on sensitive robotics and automation systems. The program addresses the unique needs of the digital economy, and evaluates innovative powering options for the Internet and telecommunications industries. It also offers expert insight into power conditioning issues, along with guidance on the proper selection, application, and installation of power quality mitigation hardware.

This project supports the PIER Program objective of:

- Improving the reliability/quality of California's electricity by providing knowledge to California ratepayers about how to mitigate power quality problems that cause equipment failures and process disruptions.

Proposed Outcomes:

1. Gather knowledge and develop a test database of susceptibility issues for robotics and automation systems. Explore device-to-device and device-to-environment power quality and electromagnetic compatibility issues.
2. Assess the benefit to the customer of providing utility service connections to customer sites that use on-site generation to fully offset their load. On-site generation is critical to meeting the "high nines" (up to 99.9999999%) of reliability required by some customers, such as Internet data centers. On-site generation is also an integral part of many internal electric customer distribution systems. For service providers, this raises serious economic issues: How can a utility justify the cost of new customer connections if zero-net sales of energy will occur at that site? How can a utility recover transmission and distribution infrastructure investments when existing customers add distributed generation (DG)? There are also serious questions about how much capacity should be built into the transmission and distribution system to handle contingencies for periods when customer DG is not available. To address these issues, this project will provide an analytical review demonstrating the technical benefit of having the utility connection present. This will be extremely useful to the utility when trying to assess service connection fees that are fair to both the customer and utility company.

3. Design embedded solutions for telecommunications and Internet equipment. Embedded solutions for the digital economy can help to bridge the gap between the quality and reliability of power required and the ability of digital loads to survive the electrical environment. This groundbreaking, multi-year project will evaluate the current design criteria for digital loads and the performance of the baseline design with respect to power quality immunity, and fault tolerance.
4. Evaluate advanced flywheels and ultracapacitors as embedded solutions to improve the power quality performance of advanced machine tools and robotics. This project involves testing, technology demonstrations, and the integration of unique ride-through technologies into original equipment manufacturer equipment. In addition, a task force has been formed to facilitate development of industry standards for ride-through of such equipment.
5. Build on previous EPRI work that developed a methodology for system cost analysis and a probabilistic framework for conducting cost analysis for power quality mitigation hardware. The focus in 2002 is to apply the methodology to actual customer power conditioning demonstration projects conducted by EPRI. Life cycle costs will be developed for several power quality mitigation devices. The new methodology will be verified using an actual customer power conditioning demonstration project.
6. Provide late-breaking news on emerging power quality technologies and trends in powering e-business.

Actual Outcomes:

1. Power Quality and Electromagnetic Compatibility Impacts on Robotics and Information Systems.
   - In 2002 EPRI performed voltage-sag tests to measure the baseline effects of voltage sags on industrial robots. General Motors provided access to automotive robots for testing. A technical brief, *Power Quality Impacts on Robotic Automation Systems* (1001667), describes the test results.
2. Methodology for Determining Cost Recovery for "High Nine" Customers with On-Site Generation.
   - The project team drafted a technical report that assesses the technical benefit of providing a service connection to customer sites that use distributed generation to limit their energy utilization to essentially zero. The report is scheduled for publication in March 2003.
3. Embedded Solution for Telecommunications and Internet Equipment.
   - A technical report (1001670) was drafted that evaluates the current design criteria for digital load power supplies and performance of the baseline design with respect to power quality immunity and fault tolerance. An embedded solution was designed to provide longer ride-through in “sleep” mode. The report will be available in late March 2003.
4. Advanced Flywheel and Ultracapacitor as Embedded Solutions for Advanced Machine Tools and Robotics.
   - The project team prepared a technical report—*Advanced Machine Tool Embedded Solution* (1001673)—assessing the requirements of the robotics and machine tools industries to improve process uptime and identifying advanced technologies as embedded solutions for advanced machine tools and robotics. The report will be available in late March 2003.

5. Cost Analysis and Reduction of Power Quality Mitigation Hardware.
   - A technical report—*Life Cycle Cost Analysis of PQ Mitigation Devices* (1001674)—was developed that presents a case study demonstrating how system cost analysis using a probabilistic framework is conducted with real-life data from a power quality mitigation hardware demonstration project. The report will be available in late March 2003.
6. Power Quality and Powering E-Business Technology Watch.
   - Up-to-date information on power quality technologies and market trends is provided via web-based updates delivered electronically.

Project Status:
The project has been completed.

Production, Manufacturing, and Electronics Industries - Program 12

Contract #: 500-00-023 **Project #:** 36-37
Contractor: Electric Power Research Institute (EPRI)
Subcontractors: Global Energy Partners, LLC
Project amount: $9,000
Match amount: $6,285
Contractor Project Manager: Keith Carns (314) 935-8598
Commission Contract Manager: Pramod Kulkarni (916) 654-4637
Status: Completed

12.004: Cooling Water Cost Comparison Model
12.006: Electrotechnologies for Waste Reclamation

Project Description:
This program provides knowledge and tools to help production, manufacturing and electronics industries use electrotechnologies to solve environmental issues such as water treatment and waste reclamation in an informed, cost-effective manner.

This project supports the PIER Program objectives of:

- Supporting the development of new electricity applications to solve environmental problems by providing information and evaluation tools that help businesses apply electrotechnologies for water treatment and waste reclamation.
- Providing environmentally sound electricity by expanding the use of electrotechnologies that replace or supplement processes that may harm the environment.

Proposed Outcomes:

1. Develop a cooling water cost comparison model that allows users to evaluate and compare the costs of ozone cooling water technologies. The model will be available as an Excel spreadsheet that allows insertion of specific data to be analyzed.
2. Develop information on electrotechnologies for waste reclamation to support and promote the use of efficient, environmentally sound reclamation and recycling processes.

Actual Outcomes:

1. Cooling Water Cost Comparison Model.
   - A compact disk containing an Excel spreadsheet cost comparison model and examples was produced and delivered in 2002.
2. Electrotechnologies for Waste Reclamation.
   - A technical report—*Electrotechnologies for Waste Reclamation* (1005869)—was developed and made available as a downloadable PDF file or delivered on a compact disk.

Project Status:
The project has been completed.

Recycling Chiller-Bath Rinse Water in Poultry Processing

Contract #: 500-98-030
Contractor: WaterTech Partners
Contract Amount: $520,912
Match Amount: $144,000
Contractor Project Manager: Ronald Enzweiler (925) 283-4918
Commission Contract Manager: Ricardo Amon (916) 654-4019
Status: Completed

Project Description:
The purpose of this project is to reduce the energy required in poultry processing by demonstrating the feasibility of using ozone-based water treatment technology to recycle chiller bath rinse water in poultry processing operations.

Presently, poultry processors use chlorine chemicals to disinfect the chiller-bath step and must discard the 0.5 gallons of chilled, chlorinated rinse water used per bird to meet USDA sanitary regulations.

This project supports the PIER Program objectives of:

- Improving the energy cost/value of California's electricity to electric ratepayers by reducing energy use or improving energy efficiency in the industrial sector.
- Improving the environmental and public health costs/risks of California's electricity by avoiding the use of chlorine disinfectants.

Proposed Outcomes:
Using the Mobile Treatment Demonstration Unit (MTDU) provided by EPRI, a feasibility will be conducted to:

1. Demonstrate that ozone is an effective anti-microbial sanitizer in poultry processing which can be safely used in direct contact with the birds.
2. Demonstrate that ozone does not create any harmful by-products or side effects when used as an anti-microbial sanitizer in poultry processing.

Actual Outcomes:
Upon obtaining U.S. Department of Agriculture (USDA) approval for a pilot-test program, WaterTech partners:

1. Designed, installed and operated a closed-loop, ozone-based pilot recycling system at a Petaluma, California poultry processing chiller line for six months.
2. Demonstrated that ozone is an effective anti-microbial sanitizer in poultry processing which can be safely used in direct contact with the birds.
3. Demonstrated that ozone does not create any harmful by-products or side effects when used as an anti-microbial sanitizer in poultry processing.

The successful pilot-scale testing resulted in USDA approval for replacing chlorine with ozone in the chiller-bath process of the poultry-processing industry. The project achieved energy savings by returning the filtered and disinfected chiller-bath overflow water to the heat exchanger used to chill water for the chiller bath. Since the average temperature of the feed water will be reduced to about 50 degrees F from 75 degrees F, the refrigeration load will be dramatically reduced which, in turn, will lower overall system energy requirements.

Project Status:
The project has been completed. The final report is available. For more information, please contact Ricardo Amon at (916) 654-4019.

IAW Projects Completed in 2001

Assessing the Impact of Power Quality for California Industries

Contract #: 100-98-001 **Project #:** 37
Contractor: Electric Power Research Institute (EPRI)
Project Amount: $32,500
Match Amount: $32,500
Contractor Project Manager: Ashok Sundaram (650) 855-2304
Commission Contract Manager: Pramod Kulkarni (916) 654-4637
Status: Completed

Project description:
This project's goal is to understand the impact of power quality on California industries and assess the technical and economic criteria for developing effective technologies for power quality mitigation. This information will help improve the productivity of California industries by reducing the impact of power quality through targeted R&D based on the needs of particular industrial segments.

The proliferation of sensitive electronic loads has raised concern in many California businesses about the quality of power and its potential negative impact on productivity, downtime costs, lost product, energy utilization, global competitiveness, and the environment. The Commission has a programmatic approach to invest in the R&D of new power quality mitigation technologies. One critical feedback that is required in order to channel the future R&D needs for power quality mitigation technologies is to clearly understand the unique power quality problems affecting California industries and the loss of productivity due to power quality problems. There is a need for obtaining credible feedback from California industries regarding power quality problems and their impact.

This project supports the PIER Program objectives of:

- Improving the Reliability/Quality of California's Electricity by developing knowledge and tools to solve power quality problems that cause equipment failures and process disruptions.
- Improving the Energy Cost/Value of California's Electricity by reducing process inefficiency associated with power quality disturbances.

Proposed Outcomes:

1. Identify the characteristics of energy storage requirements and power quality mitigation characteristics for emerging technologies that can be applied by customers for power quality mitigation.
2. Assess the cost impact of power quality on California industries and define a target range for mitigation hardware cost in $/kW or $/kVA.

Actual Outcomes:
The project team developed and distributed a survey to identify the perceptions of California industries regarding the quality of power they receive, the most common issues, and the most appropriate R&D to undertake to solve the problems faced by industry. The survey results were analyzed, and a final report was submitted to the Commission. Conclusions were the need for the following:

1. Training and education of California's commercial and industrial energy consumers.
2. Power quality monitoring programs by utilities and their customers.
3. Development of mitigating technologies.
4. Field investigative services and technology demonstration.
5. An expanded power quality knowledge base.
6. Creation and expansion of power quality standards for end-use equipment.

This information will help improve the productivity of California industries by reducing the impact of power quality on sensitive loads, and by avoiding downtime costs and lost product.

Project Status:
The project has been completed.

Customer Power Conditioning Solutions - Target 4

Contract #: 500-00-023 **Project #:** 1
Contractor: Electric Power Research Institute (EPRI)
Subcontractors: EPRI PEAC Corporation : Enable Fuel Cell Corporation
Project Amount: $149,947
Match Amount: $1,486,946
Contractor Project Manager: Ashok Sundaram (650) 855-2304
Commission Contract Manager: Pramod Kulkarni (916) 654-4637
Status: Completed

Project Description:
The purpose of this project is to address the power quality (PQ) issues facing commercial and industrial energy users who are using devices that are more sensitive to PQ variations. Sensitive loads often are in extensive networks and automated processes, and many loads use power electronics for power conversion. These new, technology-driven changes have created a growing concern in many California businesses about the quality of power and its potential negative impact on productivity, downtime costs, lost product, energy utilization, global competitiveness, and the environment. These concerns focus on power quality mitigation equipment—that is, power conditioning and energy storage equipment that can protect loads from PQ variations.

EPRI research efforts have identified voltage sags and momentary interruptions as the two most important categories of power quality variations affecting end users. Traditional power quality mitigation technologies such as uninterruptible power supply systems can address these problems but at a substantial cost and sometimes with marginal performance. EPRI's Customer Power Conditioning Solutions Target provides information about the best and most cost-effective power conditioning and energy storage equipment available, and the technical expertise to help California ratepayers use the equipment properly. This target provides information on power conditioning issues, along with guidance on the proper selection, application, and installation of power conditioning and energy storage equipment. It also identifies and demonstrates new and innovative technologies with high commercialization potential such as advanced flywheels
and ultracapacitors.

This project supports the PIER Program objective of:

- Improving the reliability/quality of California's electricity by providing knowledge to California ratepayers about how to mitigate power quality problems that cause equipment failures.

Proposed Outcomes:

1. Produce system compatibility test protocols for determining the feasibility of applying local generation and its effects on power quality in customer environments.
2. Investigate the susceptibility of advanced computer numerically controlled (CNC) machine tools to voltage sags, assess the possibilities of cost-effective embedded power quality solutions, and illustrate the concept of embedded solutions with case studies.
3. Demonstrate how to conduct a life-cycle cost analysis for a power quality mitigation project at a commercial customer site and incorporate statistical information in the decision-making process.
4. Develop case studies to evaluate the power quality implications of hybrid systems consisting of power quality mitigation hardware and energy delivery and energy storage systems.
5. Provide laboratory data and performance analysis of a proton exchange membrane (PEM) fuel cell designed for power quality applications.
6. Conduct an EPRI Tailored Collaboration (TC) project entitled "Assessing the Impact of Power Quality for California Industries."
7. Conduct an EPRI TC project entitled "Guidebook on Power Quality Guidelines for Energy Saving Products."

8. Conduct an EPRI TC project entitled "Emerging PQ Mitigation Product Demonstration at Customer Sites."
9. Conduct an EPRI TC project entitled "Optimization of Electric Energy Consumption in Marginal California Oilfields."

Actual Outcomes:

1. A report—Distributed Generation Source Stiffness and Its Impact on Voltage Distortion, 1005922—was published on an evaluation of voltage distortion resulting from application of nonlinear load for three different types of rotary generators and one inverter-based generator.
2. A report—PQ Mitigation Technology, Market, and Cost: Advanced Machine Tool 2001 Efforts, 1005923—was published on the effects of voltage sags on advanced machine tools and the use of power conditioning equipment to mitigate these disturbances. A report—Embedded Solutions for Advanced Machine Tools: Field Demonstration and Test Results, 1005924—was published on field case studies related to voltage sag testing of computerized numerical control (CNC) machining.
3. A report—Development of Probabilistic Analysis Tools for Optimal Selection of Power Quality Mitigation, 1005925—was published to provide a comprehensive methodology for performing an economic analysis of the life-cycle cost for power quality mitigation hardware solutions.
4. A report—Case Studies, 1005926—was published on power quality implications of an existing hybrid installation.
5. A report—Evaluation of a 3-kW Proton Exchange Membrane (PEM) Fuel Cell 1005927—was published to document results of a demonstration of a PEM fuel cell for power quality applications such as UPS systems and replacement for lead-acid batteries.
6. Tailored Collaboration: Assessing the Impact of Power Quality for California Industries. Researchers developed and distributed a survey to identify the perceptions of California industries regarding the quality of power they receive, the most common issues, and the most appropriate R&D to undertake to solve the problems faced by industry. The survey results were analyzed, and a draft report was submitted to the CEC for review and comment. Once comments are received, EPRI will publish the final report. This information will improve the productivity of California industries by reducing the impact of power quality on sensitive loads, and by avoiding downtime costs and lost product.
7. Tailored Collaboration: Guidebook on Power Quality Guidelines for Energy-Saving Products. The project team identified the characteristics of power quality issues related to energy-saving products, developed guidelines for minimizing power quality impacts, and created tools for evaluating energy–saving claims from "black-box" type energy-saving devices. This information will remove one of the barriers to application of energy-saving devices by California industries, and enable users to apply these products without power quality impacts.
8. Tailored Collaboration: Emerging PQ Mitigation Product Demonstration of Customer Sites. Investigators arranged for the field demonstration of power quality mitigation technologies at California industry locations. Technology evaluations and economic assessments were conducted. Site selection and survey and auditing of the site are under way. Once these are complete, EPRI will publish the results of Phase I and produce a draft proposal for Phase II. The field demonstration will be conducted in Phase II. Results will offer California industries real-life application experience with new technologies.
9. Tailored Collaboration: Optimization of Electric Energy Consumption in Marginal California Oilfields. Oilfield surveys completed by May 2001 collected data from 19 fields. The field data represented 939 producing wells, of which 91% were rod-pumped wells. Existing and new technologies were reviewed to improve oilfield electrical efficiency. Extrapolation of these results to all wells in California could result in a total benefit that could exceed 139 GWh/M in reduced power consumption and a demand reduction exceeding 221 MW. If these suggestions were implemented, a reliable system-wide demand reduction may be realized by energy suppliers through reduction of the need for additional generation and power infrastructure. Results were published in Optimization of Electric Energy Consumption in Marginal California Oilfields, 1006487.

Project Status:
The project has been completed.

Guidebook on Power Quality Guidelines for Energy Saving Products

Contract #: 100-98-001 **Project #:** 38
Contractor: Electric Power Research Institute (EPRI)
Project Amount: $37,500
Match Amount: $37,500
Contractor Project Manager: Ashok Sundaram (650) 855-2304
Commission Contract Manager: Pramod Kulkarni (916) 654-4637
Status: Completed

Project description:
This project's goal is to develop information to help California industries to understand the power quality issues associated with energy-saving products so they can use these devices properly and minimize equipment disruptions due to power quality side effects.

Electric motors account for more than half of total energy usage in the industrial sector. Several types of technology are used to reduce the energy consumption of motors, including adjustable speed drives, motor voltage controllers, power factor correction capacitors, energy efficient motors, and, in some cases "black-box" type devices that claim considerable energy savings potential. Many California industries lack the information to understand the energy savings potential claimed by a number of "black box" type devices. In addition, the use of some energy-savings products may cause equipment to operate incorrectly due to incompatibility of the device and the equipment. This has, in some cases, caused a negative perception among users regarding application of energy savings products.

By developing practical guidelines for these energy saving products, this project will help users to apply these devices while avoiding power quality problems. This will remove one of the barriers in the application of energy savings products by California industries.

This project supports the PIER Program objectives of:

- Improving the Reliability/Quality of California's Electricity by developing knowledge and tools to avoid solve power quality problems that cause equipment failures and process disruptions.
- Improving the Energy Cost/Value of California's Electricity by reducing process inefficiency associated with power quality disturbances.

Proposed Outcomes:

1. Identify the power quality issues and their characteristics related to energy saving products, focusing mainly on energy savings measures for motors and lighting.
2. Identify the characteristics of "black-box" type energy savings products and, based on literature searches and prior testing conducted by EPRI, evaluate the potential for energy savings.
3. Develop guidelines for the application of energy saving products to minimize incorrect equipment operation as a result of power quality problems.

Actual Outcomes:
The project team identified the characteristics of power quality issues related to energy-saving products, developed guidelines for minimizing power quality impacts, and created tools for evaluating energy-saving claims from "black box" energy-saving devices. EPRI delivered a report, *Power Quality Guidelines for Energy Saving Products,* to the Commission. This information will help remove one of the barriers to application of energy-saving devices by California industries, and enable users to apply these products without power quality impacts.

Project Status:
The project has been completed.

Summer Electric Load Reduction in California's Cast Metal Industry

Contract #: 500-00-012
Contractor: California Cast Metals Association
Contract Amount: $126,606
Contractor Project Manager: James Simonelli (916) 933-3062
Commission Contract Manager: Rajesh Kapoor (916) 654-4611
Status: Completed

Project Description:
The purpose of this project is to develop energy efficient metal melting methods and operating procedures for the metal casting industry in California. Metal melting accounts for approximately 55 percent of the total energy used at a foundry. California is ninth in the US in tonnage of castings produced, and the industry employs more than 20,000 people. Survey forms were sent to over 200 foundries, die casters and smelters operating in California. All of the responders indicated that they were not capturing waste heat from melting furnaces and that 25 percent their operating costs were for energy. Only 28 percent had some type of energy monitoring on melting operations. The methods and procedures developed in this project will help reduce electrical energy consumption and minimize the impact of possible electrical interruptions.

This project supports the PIER Program objectives of:

- Improving the energy cost/value of California's electricity by reducing the electrical energy use during the metal melting processes.
- Improving the reliability/quality/sufficiency of California's electrical system by developing the energy efficient methods/procedures to melt the metal for the metal casting industry.

Proposed Outcomes:

1. Average expected savings of 20 percent for the energy used in each metal melting operation by using the techniques developed under this contract.
2. Every cast metal facility in California that can benefit from these energy conservation methods will get the report and CD-ROM explaining the procedures to save the energy, time, and the resources.
3. Reduce the electrical load and electrical consumption in metal melting facilities in California and avoid the electrical interruptions in the summer.

Actual Outcomes:

1. The information received in the Metal Melting Survey gave a profile of California metal melting operations that were segmented into two groups, Ferrous and Non-Ferrous. There is a large variation in the type of castings produced at the facilities responding to the survey. The three largest tonnage operations in California produce approximately 50 percent of the total tonnage. The remaining 200+ foundries represent smaller
operations that have limited technical resources and most need the suggestions presented in this report.
2. A copy of the report was distributed to the California cast metal industry.
3. Facilities implementing the report's recommendations can be expected to achieve average savings of 20 percent for metal melting operations.

Project Status:
The project was completed within the budget and Commission received the final report in December 2001.

IAW Projects Completed in 2000

1999 & 2000 Agriculture

Contract #: 100-98-001 **Project #:** 29
Contractor: Electric Power Research Institute (EPRI)
Subcontractors: Edison Technology Solutions/Southern California Edison : Electrochemical Design Associates : G & L AgriTec : Hawaiian Electric Company, Inc. : North Carolina State University : ProWrite, Inc. : Purdue University : SoilZone, Inc. : Texas State Technical College : University of Georgia, Research Foundation, Inc. : Jonne Berning
Project Amount: $169,000
Match Amount: $693,377
Contractor Project Manager: Myron Jones (650) 855-2993
Commission Contract Manager: Ricardo Amon (916) 654-4019
Status: Completed

Project Description:
The purpose of this project is to offer a complete package of advanced energy solutions and technical support to increase farm production and reduce costs. U.S. farms spend about $12 billion each year for energy. Approximately $3.8 billion of that goes toward electricity purchases. Efficient use of electricity has a critical impact on profitability. Today's farmers and agribusinesses rely heavily on advanced technologies and science to turn a profit. Where once farmers turned a watchful eye to the sky for signs of rain, satellites now give them detailed snapshots of weather conditions around the country. Farmhands have been replaced by energy-efficient motors and other electrotechnologies to the tune of 44 billion kWh of electricity consumption annually. This EPRI target also provides marketing communications tools to provide access to these energy solutions to agribusinesses.

This project supports the PIER Program objectives of:
- Improving the energy cost/value of California's electricity by providing energy solutions for agribusinesses to increase farm production and reduce costs.
- Improving the environmental and public health costs/risks of California's electricity by demonstrating the use of ozone as a replacement for chemicals such as methyl bromide for purification, fumigation, and disinfection.

Proposed Outcomes:
1. Support the potential for use of ozone in place of chemicals or other methods in agriculture.
2. Provide experience and knowledge on innovative technologies and practices to increase production and reduce costs in agribusiness.
3. Support the use of energy-efficient technologies and practices in agriculture.
4. Conduct a Tailored Collaboration entitled "Predicting Agricultural Growth After Ozone Treatment" to test the technical efficacy of treating agricultural soils with on-site generated ozone gas to reduce pest pressures on plant growth.

Actual Outcomes:
1. Use of ozone.
   - A report was published entitled Ozone in the Food and Agriculture Industries.
   - A petition was made to the Federal Drug Administration to gain regulatory acceptance of ozone treatment of food products in agriculture and food processing. The petition is under review by the FDA and a ruling is expected in 2001.
   - An ozone conference was held in September 1999 in Tulare, and abstracts were published.
2. Technologies and practices to increase production and reduce cost.
   - A report was published on freshwater recirculation aquaculture systems that hold the potential to make fishfarming more profitable.
   - A report was published on a North Carolina demonstration of an aquaculture facility utilizing water re-use technology.

- Results of a study were published on poultry spiking mortality, highlighting the importance of purified drinking water in poultry production.
- Results of study were published on stray voltage and animal sensitivity levels.
- A report was published on the potential for drip irrigation of technical row crops.
- Information was published on a greenhouse study of very intense lettuce production.
- A report was published on closed-cycle shrimp farming.

3. Energy efficient technologies and practices.
   - A report was published on the McLeod harvest method, an innovative grain harvesting technology that offers a promising alternative to combine harvesting, especially for small farms.
   - Technical and energy consumption information were published on the application of variable-speed drives to increase the energy efficiency and controllability of agricultural fans.
   - Findings were published on the use of static phase adaptors to utilize 110-volt current on large three-phase irrigation motors.
4. Field trials were conducted for several crops, including carrots and tomatoes, and initial success was reported. Results were summarized in a report entitled Ozone Gas as a Soil Fumigant.

Project Status:
The Commission's participation in this target ended as of December 31, 2000.

1999 & 2000 Food Processing

Contract #: 100-98-001 **Project #:** 27
Contractor: Electric Power Research Institute (EPRI)
Subcontractors: Apogenics, Inc. : C&S AgriSystems : Cornell University : Edison Industrial Systems Center : Iowa State University : New York State Energy Research & Development Assoc (NYSERDA) : Plumrose USA, Inc. : ProWrite, Inc. : Sandridge Food Corporation : University of California, Davis : University of Minnesota : Washington State University : WaterTech Partners : Graham Dee : Imbroglio Cures Inc.
Project Amount: $192,000
Match Amount: $803,471
Contractor Project Manager: Myron Jones (650) 855-2993
Commission Contract Manager: Ricardo Amon (916) 654-4019
Status: Completed

Project Description:
The purpose of this project is to provide California's food processing industry with new electrotechnologies that increase energy efficiency and reduce environmental impacts that can help keep this sector of the California economy productive and energy efficient. Concerns about the worldwide environment and demand for food are just a few of the many challenges this important sector of California industry must meet to stay competitive. A competitive food processing industry is more likely to stay in California and ensure that California's rapidly growing population has a safe and adequate food supply. EPRI offers the latest tools and information such as technical services, communication tools, and innovative initiatives that focus on food safety—a top priority among consumers and regulators today. Electrotechnologies like ozonation and pulsed power for sanitation are some of EPRI's state-of-the-art solutions to the industry's most pressing concerns.

This project supports the PIER Program objectives of:

- Improving the energy cost/value of California's electricity by developing and implementing technologies that improve productivity and energy efficiency for food processing industries.
- Improving the environmental and public health costs/risks of California's electricity by reducing fresh water supply needs, plant wastewater discharge, and improved food sterilization.

Proposed Outcome:

1. Support research and provide information to improve the competitiveness of the California food processing industry through implementation of technologies that increase energy efficiency, reduce environmental impacts, and provide safer, more productive processes.

Actual Outcome:

1. Research and information to improve the competitiveness of the food processing industry.
   - Results were published of a study of membrane treatment to reduce water use and ozonation for sanitation at a poultry processing plant.
   - A resource guide was published for evaluation of food irradiation options.
   - Technical and market information were compiled on the use of ozone for improved sanitation and water treatment in food processing.
   - Three reports were published on membrane treatment, pulsed power technologies, and other process water treatment options.
   - Research results were reported of a study of the use of electron beam irradiation and high-pressure technologies to reduce the effects of microorganisms on poultry products.
   - The food industry scooping study report was revised and updated as Food Industry 2000. The report provides an overview of the food industry.

- Findings were released from a study that tested the use of ozone as a replacement for chlorination in wheat steeping water used in wheat processing.
- A monthly newsletter was published on developments and trends in the food processing industry.
- EPRI's Membrane Trailer Demonstration Unit made on-site visits to a food processor to demonstrate and test advanced membrane technologies.

Project Status:
The Commission's participation in this target ended as of December 31, 2000.

Chemicals, Petroleum and Natural Gas - Target 23/2.6

Contract #: 100-98-001 **Project #:** 30
Contractor: Electric Power Research Institute (EPRI)
Subcontractors: Advanced Resources International, Inc. : Chemicals & Petroleum Management, Inc. : Edison Technology Solutions/Southern California Edison : El Paso Energy Corp. : Hawaiian Electric Company, Inc. : Kennedy/Jenks Consultants, Inc. : Lockheed Martin Energy Systems, Inc. : Massachusetts Institute of Technology : Niro Process Technology : Taratec Corporation : University Of Florida : University of Patras : Veritech, Inc. : ISOPro International : Optima Engineers & Co. : ProWrite, Inc. : Resource Dynamics Corporation
Project Amount: $200,000
Match Amount: $918,489
Contractor Project Manager: Ammi Amarnath (650) 855-2548
Commission Contract Manager: John Sugar (916) 654-4563
Status: Completed

Project Description:
The purpose of this project is to provide chemical and petroleum companies methods to cut energy costs while improving productivity and yield. It will also provide information for companies reviewing options for generating on-site electricity and seeking the latest and most cost-effective advances in pollution control. To stay productive and profitable, decision-makers in this market sector must address a host of economic and environmental concerns. EPRI provides information and technical expertise on advanced systems for wastewater reduction, soil remediation, and fluid transport to increase the value of electricity as this segment of California industry enhances environmental compliance and lowers operating costs.

This project supports the PIER Program objectives of:

- Improving the energy cost/value of California's electricity by providing information on reducing wastewater discharge and improving soil remediation techniques for the chemical, natural gas, and petroleum industry.
- Improving the environmental and public health costs/risks of California's electricity by providing information to reduce the impacts on the environment by the chemical, natural gas, and petroleum industry.

Proposed Outcomes:

1. Encourage the use of ozonation in process industries through a demonstration project at an industrial site in California.
2. Improve the understanding of power quality needs of large industrial complexes.
3. Provide information to encourage reduction of wastewater for process industries.
4. Provide marketing and communication tools to increase use of energy efficient technology in chemicals and petroleum process.
5. Provide information to increase use of energy efficient technologies in chemical, natural gas, and petroleum processes.
6. Conduct a Tailored Collaboration entitled "Development and Demonstration of Liquid Membrane Technology for MTBE Mitigation in Aqueous Streams" for the reduction and removal of MTBE contamination in the California water supply.
7. Conduct a Tailored Collaboration entitled "Hydrogen Pinch Studies at Arco's Wilmington (CA) Refinery" in order to identify process and equipment changes to improve hydrogen recovery in the most cost-effective way.

Actual Outcomes:

1. This proposed outcome was replaced by the Tailored Collaboration entitled "Characterizing Power Quality and Specifying Solutions at a Food Processing Plant" conducted under EPRI Target 38, Power Quality for Improved Industrial Operations.
2. This proposed outcome was replaced by the Tailored Collaboration entitled "Hydrogen Pinch Studies at Arco's Wilmington (CA) Refinery" and described in item #7 below.
3. Wastewater reduction.
   - A comprehensive report was published that identifies and characterizes current and potential water management technologies.
   - A Water Management Workshop was held in conjunction with EPRI's AIChE's Center for Waste Reduction Technologies.
4. The *Supply Side Management Kit* was produced, including brochures, guidebooks, case studies, and other promotional and education materials regarding electricity and gas sales, distribution system reliability, cogeneration, tariff analysis, and asset management.
5. Information to increase use of energy efficient technologies.
   - A scoping study report was published on enhanced oil recovery technologies.
   - A report was published on Pinch screen analysis to maximize process energy efficiency.
   - A report was published about a promising membrane process that delivers environmental and economic benefits by recovering valuable feedstocks in polyolefin plants.
   - A TechApplication document was published outlining the economics and emission reduction advantages of electric compression for natural gas storage and pipelines.
   - Market and technical information were compiled about a major business trend in the chemicals industry—the move into the high-margin segments of life sciences and specialty chemicals.
   - A report was published on trends, issues, and opportunities in healthcare.
   - A monthly newsletter was published on industrial trends and developments.
   - The Third Gas/Electric Partnership Symposium was held, bringing together representatives from electric power, gas pipeline, and service industries to pursue partnerships.
   - An overview course was presented on the petrochemical industry.
6. EPRI completed a final report—*Development of Supported Polymeric Liquid Membrane Technology for Aqueous MTBE Mitigation* (1006577)—in November 2002. A technology transfer seminar was held in February 2002. See separate write-up in this annual report with the title "Development and Demonstration of Liquid Membrane Technology for MTBE Mitigation in Aqueous Streams".
7. For a new methodology called Hydrogen Pinch, the project team collected and analyzed data at Arco's refinery in Los Angeles, and made recommendations for applying the methodology in efforts that could yield a total annual savings for the refinery of about $4.5 million. See separate write-up in this annual report with the title "HydrogenPinch™ Studies at the British Petroleum Los Angeles Refinery".

Project Status:

The project has been completed.

Customer Power Conditioning Solutions

Contract #: 100-98-001 **Project #:** 3
Contractor: Electric Power Research Institute (EPRI)
Subcontractors: Power Electronics Applications Center : Adjustable Speed Drive Demonstration Office Maxwel : Trinity Flywheel Power Corp : Diversified Commercial Hydrogen Technology, Inc. : Pillar Flywheel Co. : Active Power : Electrotek Concepts, Inc. : Urenco (England) : Oregon State University : Precise Power Corp : Teco-Westinghouse : University of Texas, Austin : Power Cell Co.
Project amount: $817,500
Match amount: $3,797,237
Contractor Project Manager: Ben Banergee (650) 855-7925
Commission Contract Manager: Pramod Kulkarni (916) 654-4637
Status: Completed

Project Description:
The purpose of this project was to address the power quality (PQ) issues facing commercial and industrial energy users who are using devices that are more sensitive to PQ variations. Sensitive loads often are in extensive networks and automated processes, and many larger loads use power electronics for power conversion. These new, technology-driven changes have created a growing concern in many California businesses about the quality of power and its potential negative impact on productivity, downtime costs, and lost product. These concerns focus on power
quality mitigation equipment, that is, power conditioning equipment that can protect loads from PQ variations.

EPRI research efforts have identified voltage sags and momentary interruptions as the two most important categories of California's power quality variations affecting end users. Traditional power quality mitigation technologies such as uninterruptible power supply (UPS) systems can effectively address these problems, but at a substantial cost. EPRI's Target 35 provides information about the best and most cost-effective power conditioning equipment available, and the technical expertise to help California ratepayers use the equipment properly. This target provides information on power conditioning issues, along with guidance on the proper selection, application, and installation of power conditioning equipment. It also identifies and demonstrates new and innovative technologies with high commercialization potential such as Advanced Flywheels, Advanced Voltage Regulator/UPS and Line Fault Protector, and Voltage Sag Ride-Through Devices.

State-of-the-art power electronics provide higher-performing solutions, integrating voltage regulation for entire customer loads, and UPS for a defined priority load. Built-in load management allows customers to prioritize loads to keep all loads supported through voltage sag and critical loads supported through an extended outage. The price point is very attractive when compared to existing UPS or voltage regulator systems. Using an advanced voltage regulator/UPS and line fault protector to power equipment through voltage sags and momentary interruptions could eliminate California industry and ratepayer power quality interruptions.

This project supports the PIER Program objective of:

- Improving the reliability/quality of California's electricity by providing knowledge to California ratepayers about how to mitigate power quality problems that cause equipment failures.

Proposed Outcomes:

1. Provide California ratepayers the opportunity to apply the advanced flywheel, a cost-effective energy storage technology, to ride through power quality events.
2. Provide California ratepayers the opportunity to apply the supercapacitor, a cost-effective energy storage technology, to ride through power quality events.
3. Provide California ratepayers the opportunity to apply the advanced voltage regulator/UPS and line fault protector, cost-effective energy storage technologies, to ride through power quality events.
4. Reduce the cost of power conditioning.
5. Conduct a Tailored Collaboration entitled "Determining the Power Quality Implications on Distribution Grid of Disbursed Electric Motors Prevalent in California's Oil Fields."

Actual Outcomes:

1. A comprehensive assessment was made of the feasibility of commercializing high-power/high-energy density flywheel batteries for uninterruptible power supply (UPS) systems for electricity customers and electricity suppliers.
2. Test results indicated that advanced power conditioning technologies such as supercapacitors could be integrated into the power supply of advanced machine tools to mitigate the effects of voltage sags, provide ride-through, and replace batteries used to maintain controller memory.
3. Several outcomes to provide ride-through power quality.
4. A new power-conditioning device—a hybrid adjustable voltage regulator/uninterruptible power supply (AVR/UPS) was developed and tested. This novel device is the first tool in the US and abroad to provide separate voltage regulation and UPS function to distinct loads from one power line conditioner.
5. An evaluation showed that advanced fuel cells have advantages over traditional UPS systems for short-term ride-through of voltage sags and momentary interruptions, and offer long-term back-up power not available from other systems.
6. A preliminary design was made of a medium-voltage dynamic sag corrector, and an assessment was made of the product's market potential and cost.
7. Several outcomes to reduce the cost of power conditioning.
8. A report compiled up-to-date information on current and projected prices for power quality mitigation equipment and the most significant market barriers to cost reductions.
9. A methodology was developed to accurately estimate life-cycle costs for mitigation equipment options.
10. Information was compiled on the power conditioning needs and mitigation hardware for the telecommunications industry.
11. An evaluation was made of the characteristics and system compatibility issues related to a new generation of power quality hardware for alternate energy systems, load leveling, and motor starting. An integration of supercapacitors and fuel cells has been completed and tested, and a high-speed flywheel and drive were installed and tested.
12. Power quality implications of electric motors in oil fields.
13. A press release was posted on the web to announce the project.
14. A report was published to provide a tutorial on components and artificial lifts typically associated with small oilfield operations.

15. Oilfield tours were conducted at six sites, including THUMS, Tideland, McPherson, Oxy USA, San Joaquin Management, and Holmes. A report was published summarizing findings from the tours.
16. A draft site survey questionnaire document was completed and posted on the web.
17. Additional tasks—including workshops and reports—are to be completed.

Project Status:
The Commission's participation in this target ended as of December 31, 2000. Participation in the Tailored Collaboration ended in 2001.

Electronics Industry

Contract #: 100-98-001 **Project #:** 11
Contractor: Electric Power Research Institute (EPRI)
Subcontractors: J&M Associates : Alzeta Corporation : International Sematech : Sematech, Inc.
Project Amount: $80,000
Match Amount: $551,868
Contractor Project Manager: William Smith (650) 855-2415
Commission Contract Manager: Clint Lowell (916) 654-4554
Status: Completed

Project Description:
The purpose of this project is to address the major energy, productivity and environmental issues of the expanding California electronics industry. Industries in this rapidly growing market sector—including manufacturers of semiconductors, printed wiring boards, telecommunications equipment, computers, and peripherals (all major California industries)—face these issues as they strive to sustain or expand their position in the global marketplace. Yield, equipment utilization, energy efficiency, power quality, and water management are essential issues that all California electronics manufacturers must address. In addition, many firms in this internationally competitive industry strive to keep their product development efforts highly confidential.

EPRI's Electronics Industry Target follows a twofold strategy in working with these proprietary-minded industry sectors. The initial step in engaging any electronics industry sector involves the creation of an "industry gateway" through the formation of strategic alliances and project partnerships with industry organizations, through which project proposals may be credibly prioritized. The second step entails developing leveraged projects that create products of mutual interest to the industry sector(s) involved and the target funders. Such leverage may come in the form of supplemental funding from target funders or access to industry funded project results that only target funders can obtain. This strategy increases the likelihood that the project results will be used by the industry sector(s) that can benefit from those results, as the industry gateway approach permits a continuing connection to industry, even after a specific project has
been completed.

This project supports the PIER Program objectives of:

- Improving the energy cost/value of California's electricity by promoting energy efficient manufacturing tools and processes, including manufacturing facility operations. The target also promotes electrotechnology applications (e.g., for water management) that result in the minimum use of electricity per unit of product, while maximizing the value of electricity by reducing overall production costs.
- Improving the environmental and public health costs/risks of California's electricity by engaging in research to improve air, water, and solids emissions through pollution prevention, in-plant recycling, and end-of-pipe mechanisms in electronics plants.

Proposed Outcomes:

1. Provide information to accelerate the development and market penetration of energy- and water-efficient technologies to make productivity and environmental gains in California electronics manufacturing.
2. Compile and disseminate up-to-date information on electronics industry market conditions, primary issues, available technologies for addressing these issues, and industry research progress and needs.

Actual Outcomes:

1. Energy- and water-efficient technologies for electronics manufacturing.
    - A report was published describing an evaluation of a perfluorocompound (PFC) capture and recovery unit designed to extract PFCs from the combined exhaust of 20 or more tool process chambers.
    - A report was published on good tool exhaust optimization practices that will help California companies reduce clean-room energy use and makeup air costs associated with inefficient static pressure losses and exhaust from process tools.
    - Access was given to six 1998 reports. These reports included: Summary of Wafer Rinse Optimization Studies at Advanced Micro Devices (AMD), Motorola, and Texas Instruments (TI) Fabs, International 300 mm Initiative (I300I) Tool Utility Usage Study, Evaluation of an SG Water Systems GmbH Prototype Electrodeionization (EDI) Unit, Addendum to the Sandia Evaluation of an SG Water Electrodeionization (EDI) Unit Report, Evaluation of Commercially Available On-Line Total Oxidizable Carbon (TOC) Analyzers for Monitoring Recycled Water, and Wafer Rinse Optimization Studies at Digital-Intel, SEMATECH, and Texas Instruments Fabs: Summary Report.
2. A report entitled the Worldwide Fab Energy Survey Report was published.

Project Status:

The Commission's participation in this target ended as of December 31, 1999.

High Efficiency Steam Generation (#1218)

Contract #: 100-98-003 **Project #:** 4
Contractor: Gas Research Institute
Subcontractors: COEN Company, Inc. : GTI Performing Laboratory : Detroit Stoker
Project Amount: $75,000
Contractor Project Manager: Ron Edelstein (847) 768-0889
Commission Contract Manager: Brian Laan (916) 653-7963
Status: Completed

Project Description:
The purpose of this project was to develop high-efficiency, ultra-low NO_x emission technologies for industrial packaged boilers. The major activity under the project is the complete field trials of low and ultra-low NO_x boiler burners.

This project supports the PIER Program objectives of:

- Improving the reliability/quality of California's electricity by utilizing natural gas-fired low and ultra-low NO_x emission technologies.
- Improving the public health costs/risks of California's electricity by advancing the efficient use of low-emission natural gas.

Proposed Outcomes:

1. Ultra-Low NO_x Retrofit Boiler Burner: The ultimate goal of the project is to develop industrial boilers with efficiencies above 90 percent and NO_x emissions below 5 ppm. Complete a field installation in a Department of General Services (DGS) building in the Sacramento area.
2. FIR Low NO_x Burner: Develop an ultra-low NO_x burner without external flue gas re-circulation to achieve under 9 ppm NO_x. The long-term target is to reach below the 5-ppm NO_x level. Applications are targeted for boilers and various industrial process heaters.
3. Methane deNO_x – Biomass: Expand the gas reburn technology to stoker-fired boilers using various E-fuels, wastes, and biomass and demonstrate that Methane deNO_x can be a low cost approach to bring solid fuel boilers into environmental compliance while offering many operational benefits.

Actual Outcomes:

1. Ultra-Low NO_x Retrofit Boiler Burner: Sub-5 ppm NO_x achieved at Coen's California boiler test facility. The installation at the State of California's DGS central heating plant in Sacramento, with target of <9 ppm, was completed. All performance targets exceeded design parameters.
2. FIR Low NO_x Burner: Burner sizes at 2.5, 6, and 20 million Btu/hr have been developed. The 6 and 20 million Btu/hr burners have shown 10-15 ppm NO_x in a boiler in Monroe, Michigan. The demonstration of a 2.5 million Btu/hr burner performing at 9-15 ppm NO_x in a packaged boiler at Vanderburg Air Force Base in Southern California is completed. A 60 million Btu/hr burner test at Miller Brewery showed 10 ppm NO_x performance after modifications to burner-to-boiler seal were made.
3. Methane deNO_x – Biomass: The field test at the Boise Cascade plant was successfully completed in 2000 to show that Methane deNO_x can reduce 40-50% NO_x with 10-15% natural gas. All performance goals were achieved.

Project Status:
The Ultra-Low NO_x Retrofit Boiler Burner project was successfully completed. New efforts have been initiated under the FIR Low NO_x Burner project to reduce NO_x levels to below 5 ppm and to demonstrate an application on a US Steel industrial boiler cofiring blast furnace gas, coke oven gas, or mixed fuels. For the Methane deNO_x – Biomass project, a performance database is under development, and work will continue on expanding the Methane deNO_x technology to other engineered-fuel applications.

Industrial Waste Processing (#825)

Contract #: 100-98-003 **Project #:** 3
Contractor: Gas Research Institute
Subcontractors: Changing World Technologies : MicroGas : Endesco Clean Harbors : LLC.
Project Amount: $104,000
Contractor Project Manager: Ron Edelstein (847) 768-0889
Commission Contract Manager: John Sugar (916) 654-4563
Status: Completed

Project Description:
The purpose of this project is to develop energy-efficient processes that reduce the cost and energy consumption associated with the treatment and disposal of industrial, commercial, and residential waste streams. Major activities under this project are placed in two categories. The first focuses on a cement-lock technology process that will convert contaminated sludge into environmentally safe cement. This technology could reduce the disposal cost of contaminated materials by $25 per ton. The second, an advanced Thermo-Depolymerization (TDP) process to convert organic waste into graphite and oil for industrial and commercial use, is in the early stages of development. If successful, a pilot test facility will develop data for full-scale waste reduction in food processing, petroleum, tires, plastics, municipal solid waste, sewage sludge, and animal husbandry.

This project supports the PIER Program objectives of:

- Improving the environmental and public health costs/risks of California's electricity by providing a process to convert contaminated sludge into environmentally safe cement.
- Improving the energy cost/value of California's electricity by reducing the energy used for disposal of contaminated sludge and organic waste by California energy consumers.

Proposed Outcomes:

1. TDP: Demonstrate the technical feasibility of direct conversion of organic wastes in the food, paper/pulp and tire industry to middle distillates, fatty acids and power.
2. Sewage Sludge: Design and construct a two-ton per day pilot plant for converting sewage sludge in the Seattle area.
3. Cement Lock: Produce a validated cement-locking process technology for a variety of contaminants and a first commercial site to prove the technology. Conversion of Resource Recovery and Conservation Act (RCRA) class III estuarine sediments to Portland cement.

Actual Outcomes:

1. TDP: A 7.5 tons per day (tpd) pilot facility located in the Philadelphia Navy Yard is operational and turbines are connected to the grid.
2. Sewage Sludge: GRI, microGas, Inc. and the city of Seattle teamed to build a 2 tpd pilot unit. The unit is operational. Data is being collected and the technology is under evaluation by the city of Seattle for incorporation into their Reton facility.
3. Cement Lock: A demonstration facility has been sited in New Jersey during the fourth quarter of 2000. The first commercial unit has been sold to Taiwan.

Project Status:
The project has been completed.

Laboratory Type Facilities

Contract #: 500-97-013 **Project #:** 7
Contractor: Regents - University of California
Subcontractors: Lawrence Berkeley National Laboratory
Project Amount: $375,000
Contractor Project Manager: Karl Brown (510) 287-3330
Commission Contract Manager: Clint Lowell (916) 654-4554
Status: Completed

Project Description:
The purpose of this project was to provide new technology and applications knowledge to reduce the energy intensity and improve the performance of high-tech and laboratory-type facilities. Facilities of this type frequently house cleanrooms. Examples of California industries where high-tech manufacturing and research-type facilities exist are semiconductor, electronic, biotechnology, pharmaceutical, aerospace, medical and universities.

This project supports the PIER Program objective of:

- Improving the energy cost/value of California's electricity by improving the energy efficiency of an ever-growing sector of California's industry.

Proposed Outcomes:
Eight project components were identified. Each component has a goal to serve as the basis of a multi-year RD&D effort to improve energy efficiency in high tech buildings. We report on this year's objectives, outcomes, and conclusions for each project component and our progress towards reaching the goal. The eight project components and goals are:

1. Design Intent Documentation: Develop a methodology and a tool to capture design intent information and performance expectations for use throughout the building's life cycle.
2. Laboratory Fume Hood Containment: Reduce fume hood airflow requirements by at least 50 percent while improving hazard containment. An additional goal is to develop the containment technology for use in other industrial ventilation applications such as for semiconductor manufacturing.
3. Laboratory Airflow Design: Develop airflow design criteria and tools to optimize fan power consumption.
4. Field Studies/Performance Feedback: Develop a standard methodology for benchmarking complex laboratory facilities. Provide performance feedback to designers and operators.
5. Technology Transfer: Develop design guides, Web sites, workshops, and other technology transfer mechanisms.
6. Clean Room Benchmarking: Improve energy efficiency and performance of clean rooms through benchmarking across industries.
7. Clean Room Analysis Tools: Develop HVAC energy analysis and design tools for clean rooms.
8. Industry Liaison: Form collaborative alliances with industry organizations to assure success in the marketplace.

Actual Outcomes:

1. Design Intent Documentation:
   - Developed a first generation database in an MS Access to archive design intent information.
   - Captured design intent information from the UC Santa Cruz case study of the Design Guide.
2. Laboratory Fume Hood Containment:
   - Continued to develop and test a prototype low flow fume hood using a commercial hood as the base.
   - Continued to use CFD modeling to evaluate and improve performance.

- Continued commercialization efforts including arranging for two field tests, and identification of institutional barriers to adoption of the new technology.
- Option agreement signed with ATMI to develop and commercialize products for the microelectronics industry using the low flow containment ("air dam") technology.

3. Laboratory Airflow Design:
   - Initiated development of a computer program for modeling dynamic multi-fan airflow, including analysis of existing software tools that could reduce development time.
   - Developed an initial commercialization plan involving public goods funding, ASHRAE, and private sector software support.
4. Field Studies/Performance Feedback:
   - Continued laboratory benchmarking tool development including adding buildings and data to the database, and populating a second-generation database (in MS Access).
   - Analyzed the data and refined the performance benchmarks, and improved the reporting scheme.
   - Added listing of values for key performance parameters so they can be used in the design intent tool (see above) and compared to actual values when performance is tracked (BLISS).
   - An insufficient number of laboratories were studied to transfer additional information to the electronic Design Guide (see below).
   - Studied the opportunity to establish a World Wide Web interface to the database and reports, and concluded that this is the best implementation strategy.
   - Determined that collection of field data to populate the database is dependent on further funding, however, strong interest was shown by EPA to use the database in a national program (Laboratories for the 21st Century) which may provide a large source of laboratory benchmark data.
5. Technology Transfer:
   - Continued support of the electronic Energy Efficient Laboratory Design Guide – maintained a Web version, distributed floppy disks, continuously evaluated Guide and made appropriate revisions.
   - Continued case study of Guide's use on a new California laboratory and initiated second case study at UC Santa Cruz.
6. Clean Room Benchmarking:
   - Continued benchmarking work, including: refinement of metrics, and expansion of case studies.
   - Arrangements have been made with PG&E to begin a major data collection effort in FY2000.
   - Disseminated case studies on LBNL's clean room Web site.
7. Clean Room Analysis Tools:
   - Continued evaluation of clean room analysis tool needs and the potential enhancements to an existing computer-based energy analysis tool (potentially DOE-2.2).
   - Determined that although a technical need exists, designers are satisfied with their existing tools and have little incentive at the present to change.

8. Clean Room Industry Liaison:
    - Hosted a clean room workshop and published the proceedings which were distributed to all attendees.
    - Hosted two clean room design charrettes, one with Genentech and one with a major San Jose electronics company.
    - Attended and participated in numerous clean room industry forums to transfer knowledge, expand network, and build industrial relationships.

Project Status:
The project has been completed.

Materials Fabrication Industry

Contract #: 100-98-001 **Project #:** 28
Contractor: Electric Power Research Institute (EPRI)
Subcontractors: Terratech Corporation
Project Amount: $336,600
Match Amount: $1,876,879
Contractor Project Manager: Leo Svendsen (973) 263-0181
Commission Contract Manager: Brian Laan (916) 653-7963
Status: Completed

Project Description:
The purpose of this project is to address the challenges the materials fabrication industry is facing from tightening profit margins, competition from abroad, and stricter environmental regulations. These challenges are pressuring materials fabricators to cut costs and improve productivity, quality, and efficiency to remain competitive. The materials fabrication industry is responsible for giving form to most of our modern conveniences it makes the metal and rubber products, machinery, printing and publishing, furniture, and plastics. An enormous amount of energy goes into producing this range of goods, over 262 billion kWh per year. In addition, it is estimated that another 700 billion kWh of secondary load can be attributed to these sources within 100 miles of the primary plant(s).

EPRI's Materials Fabrication target offers technical applications, services, and communication and marketing tools that can help the materials fabrication industry meet these competitive challenges. Technologies like transverse flux heating, infrared curing, and powder coating can improve productivity, product quality, and environmental performance. In addition, EPRI's plant surveys and demonstrations provide information and innovative approaches to re-tailor
traditional processes and cut costs in this competitive sector expertise with real customer solutions to real problems.

This project supports the PIER Program objectives of:
- Improving the energy cost/value of California's electricity by providing technologies and methods to increase energy efficiency for materials fabrication industries.
- Improving the environmental and public health costs/risks of California's electricity by providing technologies and methods that reduce emissions of materials fabrication industrial sites.

Proposed Outcomes:
1. Support the use of infrared and ultraviolet powder coatings by providing technical information on these processes.
2. Support the use of electric infrared heating (IR) in industrial processes by providing market analyses and technical, economic, and performance information.
3. Conduct a Tailored Collaboration entitled "Develop and Deliver Seminar and Demonstrations of UV Powder Coatings."

Actual Outcomes:
1. Infrared and ultraviolet powder coatings.
   - Tech briefs were published on improving powder coating performance, curing polyurethane powder coatings in IR ovens, and on curing powder coatings on
     ATV accessories.
   - A report was published on UV curable coatings to assist California fabricators and energy service companies in better understanding UV curing.
   - A cost-comparison worksheet was developed for induction curing of coatings.
2. Electric infrared heating.
   - Tech Application Sheets were published, describing real-world applications of advanced materials fabrication technologies, including impacts on costs, energy consumption,

emissions, and productivity. Applications include aluminum aging, drying and curing of silk, steel strapping, cryogenic processing of metals, and injection molding.

- Guidelines were published to support the sales and marketing of induction heating to industrial customers.
- Software was developed for estimating and comparing the operating costs of high-temperature heating options.
- A technical report was published on reducing energy consumption and increasing productivity in the thermal processing of metals.
- Twenty-three industry profiles were published, describing issues, concerns, processes, energy use, and opportunities for increasing use of advanced technologies. Industries include automotive stamping, canned fruits and vegetables, carpets and rugs, computers and office equipment, copper foundries, iron and steel foundries, meatpacking, farm machinery, hospitals, petroleum refining, and pulp and paper mills.
- A monthly newsletter was published on developments in EPRI materials fabrication research.

3. A series of five seminar and demonstrations were held at Sacramento, San Jose, Los Angeles, Irwindale, and San Diego to present information on dry powder coatings cured by infrared or ultraviolet light. The sessions included technical presentations and equipment demonstrations. In addition collateral materials were produced, including the Technology Guidebook for Electric Infrared Process Heating.

Project Status:
The Commission's participation in this target ended as of December 31, 2000.

Materials Production Industry

Contract #: 100-98-001 **Project #:** 32
Contractor: Electric Power Research Institute (EPRI)
Subcontractors: Carnegie Mellon University : Edison Technology Solutions/Southern California Edison : Taratec Corporation : TU Electric Company
Project Amount: $268,800
Match Amount: $1,553,303
Contractor Project Manager: Leo Svendsen (973) 263-0181
Commission Contract Manager: Brian Laan (916) 653-7963
Status: Completed

Project Description:
The purpose of this project is to help the materials production industries have access to new, low-cost energy and energy efficient processes. Materials production industries (steel, aluminum, foundries, glass and cement) represent the largest sector of power demand in the industrial market. These markets, important to California's future, need to have access to low-cost energy and energy efficient processes to help lower energy-related manufacturing costs and to keep these plants in California. EPRI provides access to new or existing technologies to reduce energy use and energy bills, improve productivity, lower product cost, and improve product quality. Limited resources are available to help individual plants, particularly for evaluating new electrotechnologies. The Commission can use EPRI's resources as a source of information, data, technical expertise, and tools to help California industry thrive.

This project supports the PIER Program objectives of:

- Improving the energy cost/value of California's electricity through technologies that reduce raw material waste, reduce total energy use, increase product output per unit of energy needed, and reduce the total cost of business operations.
- Improving the environmental and public health costs/risks of California's electricity by applying technologies that reduce combustion processes, thereby lowering overall combustion emissions and reducing California's contribution to global climate change.

Proposed Outcomes:

1. Conduct research to support application of new and existing energy efficient technologies for California's materials production facilities.
2. Provide information and communication tools to increase the potential application of energy efficiency technologies in California's materials production facilities.

Actual Outcomes:

1. Research to support application of new and existing technologies.
   - A comparison was conducted of all-electric versus oxy-fuel glass melting to identify the benefits and concerns of conversion to electric glass melting. Findings were published in a report.
   - An investigation was undertaken to identify new market niches for a microwave technology developed to separate water-oil emulsions from the metal particulates in steel mill sludge. Findings, published in a report, will assist industries in recycling metalworking fluid and improving waste management practices.
   - A software model was developed to compare the costs of electric induction heating versus traditional gas-fired heating systems in the aluminum and steel industries.
   - A software model was developed for analyzing electronic arc furnace dust recycling.
   - An analysis was conducted and reported on the effect of melting furnace type on the cutting machinability of gray iron.
2. Communication tools.
   - A report was produced on power quality problems associated with induction furnaces.

- Information was published on the cost and environmental advantages of electrically powered conveyor systems versus diesel-powered haul trucks for material handling in mining operations.
- Industry segment profiles were published on the powder metal parts and products industry and the fiber-based composite materials industry. Profiles reviewed the industries' characteristics, energy usage, production statistics, and market structure.
- Information was provided on indoor air quality (IAQ) issues for foundries to assist the CEC in better understanding the rules and regulations associated with foundry IAQ.
- Information and guidelines were published on the costs, energy efficiency, emissions, and production advantages of nonferrous metal melting electrotechnology.
- A monthly newsletter was published covering technology developments, applications, and trends in the aluminum industry.
- A monthly newsletter was published updating developments in the steel industry.
- A monthly newsletter was published providing updates and news of EPRI projects related to materials production industries.

Project Status:
The Commission's participation in this target ended as of December 31, 2000.

Municipal Water and Wastewater Industry

Contract #: 100-98-001 **Project #:** 31
Contractor: Electric Power Research Institute (EPRI)
Subcontractors: Nitrate Removal Technologies : PERKINS DBA DAVID : RICE International : American Water Works Research Foundation : Black & Veatch : BOC Group, Inc. : Camp Dresser & McKee : CH2M Hill, Inc. : City of Houston, Texas : Clean Earth Technologies : Edison Technology Solutions/Southern California Edison : ESG International, Inc. : Hazen & Sawyer : HDR ENGINEERING, INC. : Kennedy/Jenks Consultants, Inc. : Malcolm Pirnie, Inc. : McAllen Public Utilities : ProWrite, Inc. : Tennessee Valley Authority : University of Missouri, Columbia : University of New Hampshire : Washington State University : West Chester Area Municipal Authority
Project Amount: $252,000
Match Amount: $2,986,184
Contractor Project Manager: Keith Carns (314) 935-8598
Commission Contract Manager: Wendell Bakken (916) 654-4042
Status: Completed

Project Description:
The purpose of this project is to provide technology and information on the cost effective use of energy to deliver clean drinking water, treat, dispose, and reuse wastewater, and dispose of residuals, biosolids, and brines. Advanced technologies include ozonation of drinking water, freeze/thaw waste conditioning, and ultraviolet (UV) disinfection techniques. The available supply of high quality water and sufficient wastewater treatment capacity are essential to future economic development of a region. On average, municipal water/wastewater industries comprise approximately 3 percent of the total electrical load (approximately 75 billion kWh per year). Due to population increases, the load for these industries is projected to increase by more than 20 percent over the next 15 years. Of key interest in this EPRI target is the need for clean drinking water and the use of water for industrial purposes.

This project supports the PIER Program objectives of:
- Improving the energy cost/value of California's electricity by providing advanced technologies to cost effectively deliver clean water, and process and dispose of wastes derived from water treatment.
- Improving the public health costs/risks of California's electricity ratepayers by providing technologies that effectively purify water and wastewater.

Proposed Outcomes:
1. Increase the potential for application of ozonation of drinking water.
2. Increase the potential for application of advanced technologies for water and waste-water treatment.
3. Increase the potential for application of Pulsed UV for Water/Wastewater Disinfection.

Actual Outcomes:
1. Ozonation.
   - A progress report was published on a feasibility study on the use of ozone disinfection system at a large-scale wastewater treatment plant.
   - A document entitled Issues for Ozone for Drinking Water Treatment was published.
   - A technical report was published on minimizing the operating and capital costs of ozonation systems.
   - A tech brief was published on ozone uses in small drinking water systems.
   - A report was published on Phase III of the Ozone Efficiency Project, which focused on optimization of ozone use during pre-design and design of water treatment systems.
2. Advanced technologies for water and wastewater treatment.

- A manual was published on membrane technologies for municipal water treatment that describes different membrane technologies similarities and differences, operational parameters, and aspects to consider.
- Tech briefs were published on results of a project conducted with California water districts to investigate ozone use, desalination, reclaimed water technologies, membrane treatment of industrial wastewater, and denitrification of potable drinking water.
- A CD-ROM was produced with an overview of water and wastewater treatment processes.
- A generic model was developed for an energy and water quality management system.
- A microporous membrane pretreatment and reverse osmosis desalination system was tested in a California wastewater reclamation project, and results were reported.
- A report was published on VARIO-ROTM, a promising pumping and energy recovery technology for the reverse osmosis desalination process.
- A tech brief was published on technologies for improving water desalination.
- A document was published on desalination of brackish water and seawater.
- A tech brief was published on water treatment plant residuals.
- A report was published on the status of small-system, onsite decentralized wastewater treatment plants in the United States.
- A workshop was conducted entitled "Promising Electrotechnologies to Enhance Water and Wastewater Treatment."

3. Pulsed Ultraviolet Light for drinking water disinfection.
   - A report was published on pulsed UV light for drinking water disinfection and membrane fouling control.
   - A tech brief was published on the results of research conducted by the Metropolitan Water District of Southern California to evaluate the effectiveness of pulsed UV light for drinking water treatment.
   - A progress report was published on pilot testing of four different UV reactor configurations and three types of lamps for potable water disinfection.
   - A report was published on a UV demonstration at a wastewater treatment plant in Poughkeepsie, New York.

Project Status:
The project has been completed.

Power Quality for Improved Industrial Operations

Contract #: 100-98-001 **Project #:** 6
Contractor: Electric Power Research Institute (EPRI)
Subcontractors: Duke Energy Corporation : Electrotek Concepts, Inc. : EPRI PEAC Corporation : Global Software Resources, Inc. : Jacobs Engineering Group, Inc.
Project Amount: $788,346
Match Amount: $2,995,914
Contractor Project Manager: Sid Bhatt (650) 855-8751
Commission Contract Manager: Pramod Kulkarni (916) 654-4637
Status: Completed

Project Description:
The purpose of this project is to address problems of power quality for the modern, highly automated industrial plants in California that suffer from breakdowns and lost productivity due to voltage, current, or frequency variations within the plant. Power quality (PQ) problems on the utility lines or within an industrial plant can cause equipment failure, damaged products, unsafe working conditions, and wasted time, material, and labor. With today's global competition and increasingly sophisticated and computer-controlled manufacturing processes, industries demand a reliable source of electricity. Energy companies and customers alike need up-to-date information, technology, and training if both are to remain competitive.

This target offers a complete package of data, information, and knowledge addressing power quality concerns at industrial plants. EPRI products are designed to reduce analysis and engineering time, labor costs, and investigation expenses. Information and training programs serve to educate utility and industrial customer power quality personnel on how to avoid power quality problems by characterizing specific systems. Economic analysis of solution options allows California industry to select the right solution for the PQ problem at hand at the right cost.

This project supports the PIER Program objectives of:

- Improving the reliability/quality of California's electricity by helping California industry more quickly identify the causes of power quality problems, understand the various options for solutions and costs of implementation, and then select the option that best fits the need.
- Improving the energy cost/value of California's electricity by reducing the impacts of power quality problems by providing cost-effective and fast solutions.

Proposed Outcomes:

1. Provide experiential data on past power quality problems and solutions.
2. Provide information services and support for industrial-sector power quality.
3. Provide a power quality solution package for voltage sags.
4. Focus power quality improvement efforts, resources, and services more effectively for specific industries.
5. Evaluate retrofit capabilities for hardening drives/process equipment to increase the immunity of industrial customers to voltage sags and interruptions.
6. Provide information on field demonstrations of power quality mitigation technologies at industrial customer sites.
7. Provide information on industry-based power quality standards.
8. Conduct a Tailored Collaboration entitled "Characterizing Power Quality and Specifying Solutions at a Food Processing Plant" to document, evaluate, and identify solutions for power quality problems experienced by food processors.
9. Conduct a Tailored Collaboration entitled "Characterizing the Impact of Power Quality on Programmable Logic Controllers with and without Power Conditioning Devices" to develop technical guidelines to quantify the benefits of power conditioning with programmable logic controller (PLC) systems.

10. Conduct a Tailored Collaboration entitled "Power Quality Solution Guidebook for Industrial Customers" to develop a technical guidebook to help consumers identify power conditioning and other mitigation technologies that can increase industrial process immunity to voltage sag disturbances.

Actual Outcomes:

1. Experiential information.
   - A brochure and case studies were provided to help industrial customers improve ride-through and immunity to everyday disturbances.
   - An application brief was provided on application of large flywheel energy storage systems for premium power.
   - A review was completed of new harmonic mitigation technology application case studies.
2. Power quality information and services.
   - Workshops and training sessions were offered on Power Quality for Business Professionals, Power Quality Business Opportunities, Power Quality Technical Training, Power Quality Basics, Intermediate Technical Training, Advanced Power Quality, Residential Shocking, and Adjustable Speed Drive Applications.
   - A quarterly newsletter was published on power quality issues and solutions, and a monthly newsletter was published on EPRI power quality activities and events.
   - Access was provided to power quality expertise, training, and technical support from the EPRI PEAC Corporation and the EPRI Adjustable-Speed Drive Demonstration Office.
3. Version 1.0 was released of EPRI's Industrial Voltage Sag Investigator software tool that allows users to assess problems and identify solution options.
4. Information for specific industries.
   - A comprehensive guidebook was published on power quality mitigation technologies, including a description of each mitigation tool and its application.
   - An Industrial Design Guide, a browser-based information service, was established to provide a guide to power quality issues and case studies on specific processes.
5. Retrofit capabilities for increasing immunity to power quality disturbances.
   - A step-by-step application guide was published for increasing industrial equipment immunity.
   - An overview was provided of embedded solutions for reducing the sensitivity of equipment to power quality variations, focusing on technical and market issues associated with equipment modifications by original equipment manufacturers to improve equipment tolerance to power quality events.
6. Information on field demonstrations.
   - A screening tool was developed for conducting technology demonstrations for industrial customers to increase understanding and build customer confidence in products.
   - A technical document was published that provides step-by-step directions for conducting harmonic mitigation demonstration projects for industrial customers.

7. Up-to-date information was provided on domestic and international industry standards activities, including NEMA, SEMI, NEC, and others.
8. Power quality was monitored at a selected food processing plant, data were analyzed using the EPRI Power Quality Diagnostic System Software, and findings were published in a report.
9. Tests were conducted with and without power conditioning equipment—including testing for voltage sags, capacitor switching transients, and lightning-induced transients. Findings were published in a report.
10. The Industrial Power Quality Guidebook was published, with associated web-based HTML pages.

Project Status:
The Commission's participation in this target is ongoing.

IAW Projects Completed in 1999

Food Service Technology Center

Contract #: 500-97-010 **Project #:** 7
Contractor: Pacific Gas and Electric Company
Subcontractors: Fisher-Nickel, Inc. : Fisher Consulting : Food Service Technology Center.
Project Amount: $350,000
Contractor Project Manager: Grant Brohard (415) 973-0106
Commission Contract Manager: Obed Odoemelam (916) 654-4171
Status: Completed

Project Description:
This purpose of this two-part project was to establish a standard method for measuring emissions from commercial kitchens, and methods for reducing such emissions within the industry. The second part is aimed at establishing industry-wide design guidelines for achieving and maintaining optimum performance and energy efficiency in commercial kitchen ventilation systems. This project is conducting this research in response to the growing concern about the impact of emissions from the large number of commercial kitchens in California.

This project supports the PIER Program objectives of:

- Improving the energy cost/value of California's electricity by identifying ways to optimize the energy used for ventilation in commercial kitchens and reducing the health risks associated with emissions from these kitchens.

Proposed Outcomes:

1. Maximize energy efficiency in commercial kitchen ventilation systems (CKV) in a way that will maintain the health and safety functions of the CKV system.
2. Develop uniform test methods for characterizing emissions with regard to composition and major sources.
3. Develop effective emission control approaches.
4. Provide information for kitchen designers, mechanical engineers, food service operators, property managers, and maintenance people about achieving and maintaining optimum performance and energy efficiency in CKV systems.
5. Provide information applicable to new construction and, in many instances, retrofit construction.
6. Disseminate research through workshops and publications for the benefit of the industry and regulatory agencies concerned about these emissions.
7. Develop industry-wide guidelines for designing, installing and operating ventilation systems in terms of health and safety, effectiveness and energy efficiency.

Actual Outcomes:

1. Testing portion of the project (instrument calorimeters for particulate matter and for heat gain measurement) was completed. These tests were conducted to establish a site for future testing purposes.
2. Two new approaches to minimize emissions were developed, tested and evaluated. The first approach uses grease extractors to minimize emissions during the cooking process. The second approach uses catalysts in hoods for the removal of Particulate Matter resulting from the cooking process. Both of these emission control approaches were determined to be successful and have the potential for future use in the food service industry.

3. A workshop on emissions measurement and control was held for the food service industry in San Francisco. The purpose of the workshop was to establish emission factors used for measuring emissions from commercial kitchen ventilation systems (CKV) systems. Designers and manufactures from all over the country participated in this conference. Workshop proceedings were provided to interested parties.
4. A Commercial Kitchen Ventilation System Performance Evaluation and Optimization workshop was held to demonstrate the methods developed to evaluate the efficiency of CKV systems. A report on the evaluation methods was prepared and made available to interested parties.
5. A computer model designed to conduct cost assessments for commercial kitchen ventilation systems was developed and made available for industry-wide use. This model is designed to consider specific conditions and needs for individual commercial kitchens and allow for cost-effective CKV system designs.
6. A draft of industry-wide guidelines for designing, installing and operating ventilation systems in terms of health and safety, effectiveness, and energy efficiency has been completed, but because of unexpected circumstances, a no-cost time extension to complete the final guidelines was requested and granted.
7. Final report is expected January 2000 and will be available to interested parties from the contract managers.

Project Status:
The project has been completed.

Integrated Agricultural Technology

Contract #: 500-97-012 **Project #:** 3
Contractor: Edison Technology Solutions/Southern California Edison
Project Amount: $320,000
Contractor Project Manager: Lory Larson (626) 812-7161
Commission Contract Manager: Ricardo Amon (916) 654-4019
Status: Completed

Project Description:
This project demonstrated the use of ozone as a substitute soil fumigant; ozone as an alternative to aqueous toxic chemicals for fungi control in fruit packing plants; low-temperature, controlled-ventilation in storage facilities; innovative manure treatment technologies; and irrigation scheduling systems.

This project supports the PIER Program objectives of:

- Improving the energy cost/value of California's electricity by increasing the efficiency of emerging electrotechnology applications in agriculture and improving the environment.
- Improving the public health costs/risks of California's electricity by replacing toxic chemicals with cleaner electrotechnologies in the fruit industry.

Proposed Outcomes:

1. Determine the effectiveness of ozone as a preplant soil fumigant to destroy a variety of soil-borne microorganisms.
2. Determine the effectiveness of ozone as a disinfectant and fungicide in aqueous solutions used for fruit storage and packaging operations and ozone treatment for discharge water quality purposes.
3. Determine the effectiveness of ozone as a post-harvest fumigant to control insect infestation of fresh and dried fruits and vegetables.
4. Demonstrate the viability and practicality of a low-cost, temperature-controlled storage facility to inhibit insect infestation of stored fruit. Test the effectiveness of plastic film bin liners to control insects in stored prunes. Develop baseline data on Indianmeal moth populations near drying and storage facilities.
5. Determine the functionality of an innovative biological treatment device to manage the disposal of liquefied animal wastes.

Actual Outcomes:

1. Ozone treatment demonstrated substantial improvements and crop yield or plant vigor compared to untreated controls in all crops tested, except peaches. Soil treatment with ozone decreased soil pathogens and increased nutrient availability.
2. From 95 to 100 percent of all 8 fungi tested were killed in 2 minutes of contact time with the ozone treatment. None survived 3 minutes of contact. Higher doses of ozone were required to kill pathogens on fruit surfaces than those needed to kill spores in water. Ozone significantly reduced gray mold incidence on table grapes, but its efficacy was irregular. Ozone was inferior to sodium hypochlorite, sodium bicarbonate, and ethanol as a fungicide. The control of pathogens inoculated into wounds in citrus fruit failed even after prolonged treatment with very high ozone concentrations in water.
3. Table grapes, citrus fruit, and strawberries were not visibly injured by the ozone treatments evaluated. In strawberry wash water, ozonation for 3 hours greatly reduced microbe populations, moderately reduced biochemical oxygen demand, chemical oxygen

demand, and suspended solids, did not reduce total organic carbon, and increased total dissolved solids.

4. Four to 6 hours of exposure to ozone concentrations of 300 to 500 parts per million were needed to kill Indianmeal moth larvae and diapausing codling moths. Chambers designed for ozone fumigation will need to be made of materials that can withstand the corrosive action of continuous exposure to high concentrations of ozone. Therefore, results of this first phase are preliminary and more research is required.
5. The controlled ventilation and evaporative cooling system was too expensive to install, considering it would only provide safe storage temperatures for 7 months of the year. Prune quality was determined to be excellent after 1 year in storage in plastic bags. Moisture content of the prunes did not change during storage, and the fruit was exceptionally free of sugaring and mold compared to fruit stored conventionally. Bins with liners must be stored in an environment that prevents significant diurnal temperature fluctuations. Baseline data collected indicated that Indianmeal moth is the species of most concern for prune storage. The liner storage system will work well only if fruit is virtually free of infestation before being placed in the liners.
6. The sequencing batch reactor was determined an effective biological reactor for treating dairy wastewater. A two-stage sequencing batch reactor system is recommended over a single-stage system if nitrification is desired. The two-stage system was capable of achieving near-complete conversion of ammonia to nitrite and nitrate in the dairy wastewater.

Project Status:
The project has been completed.

Low Dross Aluminum Melter

Contract #: 500-97-012 **Project #:** 2
Contractor: Edison Technology Solutions/Southern California Edison
Subcontractors: TIMCO, Division of TST, Inc. : Paul Wurth, Inc.
Project Amount: $450,000
Match Amount: $2,650,000
Contractor Project Manager: Mazen Sadeq (626) 815-0513
Commission Contract Manager: Dennis Fukumoto (916) 653-6222
Status: Completed

Project Description:
The purpose of this project was the demonstration of an advanced DC-Arc Plasma furnace designed to melt aluminum scrap material for the reuse market within a controlled, oxygen-starved environment that prevents the formation of aluminum oxide (dross) and reduces the volume of process waste material.

This project supports the PIER Program objectives of:

- Improving the energy cost and value of California's electricity by demonstrating a technology that increases energy efficiency by 80 percent for recovering scrap aluminum for reuse.
- Improving the environmental and public health costs/risks of California's electricity by demonstrating a technology that yields the following advantages over gas-fired reverberatory furnaces.

Proposed Outcomes:
The objective of this project was to design, fabricate, and place into operation a five-ton DC Plasma Arc melter that meets typical commercial melting requirements of the scrap aluminum recycling industry by:

1. Upgrade the one-ton Wabash unit and apply various lessons and design improvements gained from the experimental operation of that unit.
2. Demonstrate the commercial viability of the DC Plasma-Arc melting technology for the aluminum reprocessing industry.
3. Design and build a 5-ton unit at a commercial site.

Actual Outcomes:
Design requirements for modification of the Wabash unit were prepared by the Technical Team under the direction of ETS. The Wabash upgrade activities included:

1. Tightened furnace seals to lower dross formation.
2. Designed a mechanical stirring capability.
3. Relocated furnace electrodes to increase furnace efficiency.
4. Improved furnace feed system to increase throughput and reliability.
5. Developed dross removal techniques that reduce O&M costs.
6. Demonstrated conversion of dross into useful steel-making additive.
7. Optimized the refractory practice, argon flow rate, furnace temperature and process cycle times.

Water and Wastewater Electrotechnologies

Contract #: 500-97-012 **Project #:** 1
Contractor: Edison Technology Solutions/Southern California Edison
Subcontractors: Metropolitan Water District of Southern California : Orange County Water District : Electric Power Research Institute (EPRI)
Project Amount: $410,000
Contractor Project Manager: Lory Larson (626) 812-7161
Commission Contract Manager: Wendell Bakken (916) 654-4042
Status: Completed

Project Description:
The purpose of this project was to develop electrotechnologies which can produce new supplies of reliable and affordable drinking water, reduce electrical use to deliver and treat that water, and reduce the environmental problems created by current treatment and transport processes.

This project supports the PIER Program objective of:

- Improving environmental and public health costs/risk of California's electricity by possibly eliminating some conventional, chemically-intensive water treatment techniques and by helping to avoid transfers of water from environmentally sensitive areas in northern California to southern California.

Proposed Outcomes:

1. Demonstrate Colorado River Water (CRW) salinity reduction measures using reverse osmosis (RO) and capacitive deionization (CDI) with carbon aerogel.
2. Demonstrate the use of pulsed UV for disinfection and membrane biofouling control.
3. Investigate the formation and control of bromate during ozonation.
4. Study the disinfection of reclaimed wastewater with UV.
5. Evaluate the performance of low-pressure membranes.
6. Demonstrate that high-energy injection (E-Beam) is an effective alternative for water treatment.

Actual Outcomes:

1. Both conventional treatment with and without ozone and biofiltration produced an effluent water quality suitable for use with RO. Significant energy savings can be realized with the use of ultra-low-pressure RO membranes over the previous generation of low-pressure RO membranes however, large diameter RO elements are required for membrane technology to be implemented on a large scale. Carbon aerogel CDI technology has great potential, but the technology requires more development. Future CDI evaluations should be conducted at bench scale.
2. Pulsed UV disinfected up to 99.99 percent of targeted virus and bacterial and would be significantly less costly than ozone or membrane Cryptosporidium reduction technologies. This technology could be an additional barrier to pathogenic organisms in drinking water treatment.
3. Lowering pH before ozonation was effective in reducing bromate formation, but the technology is expensive compared to chlorination because of the large chemical dosages of acid required for pH control. Ammonia is a promising bromate control strategy for the Colorado River water at ozone doses required for enhanced Cryptosporidium disinfection. Hydrogen peroxide is not an effective bromate control strategy at the ozone doses required for 90 percent inactivation of Cryptosporidium.

4. Ultraviolet disinfection is a viable alternative to adding chlorine to wastewater in the presence of ammonia for disinfection of reclaimed wastewater for non-potable reuse, and UV is much more effective in destroying bacteria. A 99.99 percent inactivation of indigenous coliphage and a 99.99 percent virus inactivation at the pilot plant was achieved.
5. Ease of reclaiming water decreased as the quality of the feedwater decreased. Generally, microporous membrane permeability decreased as the concentration of suspended solids and biochemical oxygen demand in the feed water increased. Biological Oxygen Demand (BOD) can be used as a measure of the extent to which the water is polluted with organic compounds.
6. High energy electron beam injection is an effective alternate water treatment method by meeting or approaching Maximum Containment Levels (MCLs) on a variety of priority contaminants. Additionally, costs to install and operate the system are competitive and potentially much lower than conventional and other emerging alternates and treatment on MDMA, an organic carcinogenic contaminant, showed effective removal rates at costs lower than existing chemical destruction technologies.

Project Status:
The project has been completed

Renewable Energy Technologies (REN)
Multi-Year Projects Started in 2005

Demonstration of Engineering-Based Cement Evaluation Method for Geothermal Wells

The Problem	Geothermal well cement casings provide essential structural support for California's geothermal wells. Research is needed to understand how mechanical, thermoelastic, operational and environmental loads and stresses contribute to well casings failures. Modeling research can provide proper well cement casing design and analysis vital to the long-term structural integrity of geothermal well casings.
Proposed Research	The purpose of this project is to develop and demonstrate a computer modeling method for evaluating optimal performance characteristics for cement casings used in California's geothermal wells. This project will also demonstrate appropriate casing cement mixtures following an engineering-based approach analysis. The results from these efforts will be used to 1) evaluate the structural performance of geothermal well cements which will help reduce the drilling and material costs of geothermal wells, and 2) help ensure the long-term mechanical integrity of geothermal wells which will help increase the reliability of geothermal power.
Research Justification and Goals	Supports California's goal to meet the accelerated 20 percent eligible renewable goal by 2010 and a longer-term goal of 33 percent by 2020 per the Integrated Energy Policy Report 2004 Update; and adds a project to the Commissions research portfolio that addresses key technical and scientific barriers as mandated by the Warren-Alquist Act by: • Developing computer models that can evaluate and define ranges, magnitude and types (compressive, shear and tensile) of cement stresses that will avoid overall cement failure by 20%. • Decreasing well repair/maintenance costs by 15% over the typical 30 year life based on maintenance cost of $200,000 - $410,000. • Decreasing on the average well cement cost by 2% for typical well drilling material costs between $120,000 - $150,000.
Contractor	Brookhaven National Laboratory
PIER Manager	Pablo Gutierrez M.E.

This project is being conducted by the California Energy Commission's Public Interest Energy Research (PIER) program. PIER supports energy research and development that improves the quality of life in California by bringing environmentally safe, affordable, and reliable energy services and products to the marketplace.

Development of Fluid Injection Strategies for Optimizing Steam Production at The Geysers, California

The Problem	The Geysers is the world's largest producer of geothermal energy. A huge heat resource remains there. Economic production has been maintained by injecting waters from in-field sources and, more recently, wastewaters from external sources. But injecting waters has the side effect of induced microearthquakes, a source of local social concern. Additionally, some of the geothermal fluids contain acid and noncondensible gases, which can be damaging to wells and are undesirable in atmospheric emissions. The development of a field-wide model of seismicity, geology, heat flow, water flow, and chemistry is needed for environmental management and to coordinate injection, production, and well maintenance.
Proposed Research	This project will provide tools for optimizing resource management at The Geysers geothermal field. Using various state-of-the-art techniques, researchers will analyze distribution of microearthquakes and other geologic activity, noncondensible gases and variations in water chemistry. With the information gained from these studies, the project team hopes to produce an integrated hydrothermal/geologic model with which to understand natural and induced patterns and controls, and to fine-tune such reservoir management activities as timing and location of water injection, steam extraction, well maintenance and rehabilitation.
Research Justification and Goals	Supports California's goal to have all retail suppliers of electricity meet the Renewables Portfolio Standard goal of 20 percent of retail electricity sales and accelerate the target date for reaching the Renewables Portfolio Standard goal from 2017 to 2010 per the Integrated Energy Policy Report 2003 and Integrated Energy Policy Report 2004 Update; and to effectively implement the Renewables Portfolio Standard and expand energy efficiency programs, which are the critical elements for reducing the State's dependence on natural gas per the Integrated Energy Policy Report 2003 by: • Reducing costs of electricity production at The Geysers by developing a field-wide integrated management strategy incorporating new understanding of chemistry, geology, and seismicity. • Mitigating environmental effects of geothermal production by developing a management strategy that will help reduce seismicity induced by water injection. • Reducing costs and increasing production via a better understanding of how to mitigate the effects of noncondensible gases and acids. • Increasing the usable life of The Geysers' geothermal wells. This project also addresses Warren -Alquist Act 25620.1. (C) (1) and (2).
Contractor	Department of Energy, Lawrence Berkeley National Laboratory
PIER Manager	Gail Wiggett

This project is being conducted by the California Energy Commission's Public Interest Energy Research (PIER) program. PIER supports energy research and development that improves the quality of life in California by bringing environmentally safe, affordable, and reliable energy services and products to the marketplace.

Geothermal Exploration in Eastern California Using ASTER TIR Data

The Problem	Identifying a geothermal resource useful for power generation or direct-use applications has usually relied on obvious surface expressions of elevated subsurface heat, e.g., hot springs. However, it is likely California has many subsurface geothermal resources for which such surface expressions do not exist. This project is evaluating a remote sensing technique that has the potential to detect surface heat signatures that could be indicators of previously undetected geothermal resources. If successful, the method would greatly enhance our ability to identify and expand California's geothermal resources.
Proposed Research	Evaluate a promising remote sensing method to identify undiscovered geothermal resources in California.
Research Justification and Goals	Adds a project to the Commissions research portfolio that addresses key technical and scientific barriers as mandated by the Warren-Alquist Act; and supports California's goal to effectively implement the Renewables Portfolio Standard and expand energy efficiency programs, which are the critical elements for reducing the State's dependence on natural gas per the Integrated Energy Policy Report 2003 by: • Improving the ability to detect and evaluate previously unrecognized geothermal resources. • Developing resource evaluation tools that can guide expansion of existing geothermal power generating facilities.
Publications	Fed by PIMS
Contractor	Imageair
PIER Manager	William Glassley

This project is being conducted by the California Energy Commission's Public Interest Energy Research (PIER) program. PIER supports energy research and development that improves the quality of life in California by bringing environmentally safe, affordable, and reliable energy services and products to the marketplace.

Imperial Valley and Tehachapi Implementation Groups

The Problem	Renewable energy resources are often found at long distances from major load centers, and the absence of adequate transmission infrastructure in the more remote areas represents a significant barrier to their development. Build-out of needed transmission encounters regulatory barriers with regard to investments and how they are recovered. Additional uncertainties accrue due to other regulatory hurdles imposed by federal, state and local authorities. Recognizing this, the Energy Commission's Integrated Energy Policy Report proceeding has called for the development of transmission solutions capable of opening up these renewable resources to development.
Proposed Research	The California Public Utilities Commission established the Tehachapi Collaborative Study Group to provide advice on planning transmission facilities to access wind power in the Tehachapi region. Similarly, the Imperial Valley Study Group was established to address the transmission needs of geothermal resources in the Imperial Valley region. The California Energy Commission seeks to expand work performed by these established study groups to include formulation of comprehensive transmission development plans for their respective regions and to prepare the way for eventual implementation.
Research Justification and Goals	Supports California's goal to ensure new transmission lines are built to access renewable resources through a comprehensive, integrated transmission planning process, including the creation of state-led study groups to examine tapping particular resource regions per the Energy Action Plan 2005; and to take a proactive approach to transmission planning for renewables development per the Integrated Energy Policy Report 2004 Update by: • Creating a development plan for exporting 4000 megawatts of wind power from the Tehachapi region to California load centers. • Creating a development plan for exporting 2000 megawatts of geothermal power from the Imperial Valley to enable municipal and investor-owned utilities to meet their renewable portfolio goals. • Establishing institutional cooperation among federal, state and local agencies needed if transmission plans are to be implemented, generation facilities built and energy delivered to California consumers.
Contractor	Center for Energy Efficiency and Renewable Technologies
PIER Manager	Clare Laufenberg

This project is being conducted by the California Energy Commission's Public Interest Energy Research (PIER) program. PIER supports energy research and development that improves the quality of life in California by bringing environmentally safe, affordable, and reliable energy services and products to the marketplace.

Integrated Geothermal Systems Simulator to Enhance Power Generation at the Geysers

The Problem	California's vapor dominated geothermal reservoirs produce steam and a small percentage of undesirable gases that require complex mechanical and chemical separation processes to produce electricity more efficiently. There is a tremendous potential to generate more electricity from this renewable resource and prolong the life of our State's geothermal reservoirs by developing a state-of-the-art simulation tool to help scientists and engineers better understand, manage, and operate both the geothermal reservoirs and power plants.
Proposed Research	The purpose of this project is to develop and demonstrate an integrated geothermal systems simulation tool that can be used to optimize steam reservoir management and power production such that reservoir life is extended and additional electrical generation is provided from an existing environmentally preferred facility located in California.
Research Justification and Goals	Supports California's goal to meet the accelerated 20 percent eligible renewable goal by 2010 and a longer-term goal of 33 percent by 2020 per the Integrated Energy Policy Report 2004 Update by: • Reducing the cost of geothermal electric power purchased by Northern California Power Agency Members by $1,500,000 over a 15 year period. • Reducing geothermal power station and reservoir operating and maintenance costs by $750,000 over 15 years based on controllable annual costs of about $14,000,000 per year. • Reducing parasitic load (electricity used by a power plant's equipment) by 13,000 megawatt hours over a 15 year period. • Reducing net generation decline by 7.5 megawattsover a 15 year period. • Reducing reservoir pressure decline by 15 psi over a 15 year period. • Reducing steam flow rate decline by 1,050,000,000 pounds over a 15 year period.
Contractor	Northern California Power Agency
Site Location	Middletown, CA
PIER Manager	Pablo Gutierrez M.E.

This project is being conducted by the California Energy Commission's Public Interest Energy Research (PIER) program. PIER supports energy research and development that improves the quality of life in California by bringing environmentally safe, affordable, and reliable energy services and products to the marketplace.

SMUD - 5.1 PV Carport

The Problem	Making a PV carport product for a new and potentially large PV niche market will first require the design, development and demonstration of a viable PV carport solution. The carport should enable PV to be installed at buildings and homes where PV could not be installed in any other manner. For some residential retrofit applications, the carport should provide a better mounting strategy than retrofitting PV on a concrete tile, wood shake, or metal roof.
Proposed Research	The purpose of this project is to design, develop, test, and demonstrate a lightweight, modular carport that includes photovoltaics (PV). The PV carport is likely be either: (1) a flexible PV material mounted on a flexible roofing membrane; or (2) a flexible PV module mounted on a lightweight, rigid, arched sheet-metal deck. The targeted objective will be to reduce the total weight of a carport (excluding the concrete mounting piers) by at least 50% compared to conventional existing carports of durable concrete-and-metal construction.
Research Justification and Goals	Adds a project to the Commissions research portfolio that emphasizes innovative energy supply and end use technologies, focusing on their reliability, affordability, and environmental attributes as mandated by the Warren-Alquist Act by: • Designing, developing, testing and demonstrating a lightweight, modular carport that includes photovoltaics (PV).
Contractor	Sacramento Municipal Utility District
Site Location	Sacramento, CA
PIER Manager	Hassan Mohammed M.E.

This project is being conducted by the California Energy Commission's Public Interest Energy Research (PIER) program. PIER supports energy research and development that improves the quality of life in California by bringing environmentally safe, affordable, and reliable energy services and products to the marketplace.

SMUD - 5.10 SMUD Wind Integration Study

The Problem	The Sacramento Municipal Utility District (SMUD) anticipates significant growth in the amount of wind generation in its control area over the coming years. SMUD's goal of 20 percent non-hydroelectric renewable generation could result in over 500 MW or more of wind generation in addition to the 100 MW in the present supply portfolio. The penetration of wind generation, along with the significant impact of it on the operation of a utility control area is a major question currently confronting both the wind energy and electric utility industries.
Proposed Research	The proposed work in this project will consider the SMUD control area with various and increasing levels of wind generation. A complete assessment of the impacts on system planning and operations will be performed. This project is expected to allow SMUD to include larger amounts of wind-generated power on its system and meet its RPS goals in a cost-effective manner. The results should also be applicable for all of California's larger electric utilities.
Research Justification and Goals	Supports California's goal to implement RPS standards for energy service providers and community choice aggregators so that all load serving entities are contributing proportionally to California's renewable goals per the Energy Action Plan 2005; and to accelerate the renewable resource generation goal to 2010 per the Energy Action Plan 2003 by: • Developing a high-resolution chronological model for wind generation in and near the SMUD control area. • Assessing SMUD's current practices for capacity planning, generation scheduling, and real-time operations to create a backdrop for understanding how to accommodate significant wind generation. • Using historical data from SMUD and the synthesized wind generation model to: - Calculate the capacity value of wind generation for various levels of development. - Determine the additional operating costs incurred by SMUD to accommodate various levels of wind generation into its short-term operations. - Evaluate the probable impacts of various levels of wind generation on the technical performance of the SMUD control area. • Developing tools, guidelines, and training aids to assist SMUD engineering and operating personnel adopt appropriate policies, procedures, and practices to accommodate wind generation.
Contractor	Sacramento Municipal Utility District
Site Location	Sacramento, CA
PIER Manager	Hassan Mohammed M.E.

This project is being conducted by the California Energy Commission's Public Interest Energy Research (PIER) program. PIER supports energy research and development that improves the quality of life in California by bringing environmentally safe, affordable, and reliable energy services and products to the marketplace.

SMUD - 5.2 Performance Based Incentives for PV

The Problem	Research needs to be done to explore how PBIs (performance based incentives) can best be structured to encourage a contractor to correctly design and install a PV system and to encourage the owner of the PV system to monitor the system's performance. The development of an effective PBI program at SMUD should help the Energy Commission's pilot PBI program by yielding data and information through a complementary effort, providing the perspective of a municipal electric utility, giving the commission the results of a program-development process that utilizes considerable input from the PV industry and other interested parties.
Proposed Research	This project will develop multiple PBI program structures and one of the program structures will be implemented as a pilot program. Under a performance-based incentive program: (1) the utility will monitor the system's energy production and the homeowner will be encouraged to monitor the energy production; (2) the Contractor will be required to correctly design and install the PV system; and (3) financial responsibility for correct operation will probably lie with the system's manufacturer or (less likely) the installing Contractor. (Strategies for transferring this responsibility to Contractors or manufacturers will be developed by the selected Contractor.)
Research Justification and Goals	Supports California's goal to move toward a consistent performance based approach to incentives for all solar programs per the Integrated Energy Policy Report 2004 Update by: • Developing one or more program structures for delivering performance-based incentives (PBIs) for SMUD customers purchasing photovoltaic systems. • Selecting an optimum program structure for pilot implementation at SMUD. • Identifying and describing strategies for technology transfer to other California electric utilities. • Creating a program structure suitable for use by the California IOUs.
Contractor	Sacramento Municipal Utility District
Site Location	Sacramento, CA
PIER Manager	Hassan Mohammed M.E.

This project is being conducted by the California Energy Commission's Public Interest Energy Research (PIER) program. PIER supports energy research and development that improves the quality of life in California by bringing environmentally safe, affordable, and reliable energy services and products to the marketplace.

SMUD - 5.3 Off-Peak Over-Cooling

The Problem	The insulating properties of residential building shells should make it possible to slightly overcool a home during the off-peak period and then remotely limit the use of air-conditioning during the on-peak period. Overcooling will reduce average peak-period and super-peak-period demand for electricity. Overcooling may also reduce energy usage if the control algorithms are correctly designed and implemented. Energy savings are possible because run-time for the air conditioner will decrease during the on-peak period, when efficiencies are lowest. While it will increase during the off-peak period, when outside air temperatures are lowest and daily efficiencies are highest.
Proposed Research	The project will analyze and test the performance and benefits of off-peak overcooling of space temperatures as a strategy to: (1) limit residential summer peak-period demand for electricity; and (2) create opportunities for direct load control of residential air conditioning systems. During the on-peak period, temperatures in the home will be allowed to drift upward to no more than 78°F. Various control and HVAC technologies can be used to accomplish this technical goal.
Research Justification and Goals	Adds a project to the Commissions research portfolio that has the potential to enhance the reliability, peaking power, and storage capabilities of renewable energy as mandated by the Warren-Alquist Act; and supports California's goal to allocate and prioritize RD&D funding for energy efficiency and demand response, including new communication and control technologies, planning models, end-use technologies, and validation methodologies per the Energy Action Plan 2005 by: • Developing and testing controls and HVAC package that can limit or completely curtail the use of a home's cooling system during the electric utility's summer peak periods. • Analyzing the suitability of this control and cooling strategy for use in conjunction with significant amounts of wind generation feeding the SMUD system. • Using existing, off-the-shelf products to minimize the cost of the HVAC package.
Contractor	Sacramento Municipal Utility District
Site Location	Sacramento, CA
PIER Manager	Hassan Mohammed M.E.

This project is being conducted by the California Energy Commission's Public Interest Energy Research (PIER) program. PIER supports energy research and development that improves the quality of life in California by bringing environmentally safe, affordable, and reliable energy services and products to the marketplace.

SMUD - 5.4 Evalute the Spheral Solar BIPV Product

The Problem	Spheral Solar Power (SSP) and Elk Building Products (EIK) are developing a composition shingle-style BIPV (building integrated photovoltaic) product that is anticipated to have the lowest installed cost per watt among available BIPV technologies. Testing and analysis of the performance of this SSP-Elk BIPV product is needed to determine its ability to serve the California market as a cost-effective option for PV.
Proposed Research	Davis Energy Group (DEG) will test and analyze the performance of the SSP/Elk BIPV (building integrated photovoltaic) product for use with composition roofing and determine if the product will be optimized for the California roofing market and California building practices. DEG will install and test prototype Elk/SSP shingles on a simulated residential roof at a SMUD facility and monitor and evaluate the results of this prototype installation. DEG will then implement a field test program that installs the SSP/Elk BIPV system at one or more selected field test sites, monitor the performance of the field-test PV systems, and document participant reactions.
Research Justification and Goals	Supports California's goal to implement a cost-effective program to achieve the 3,000 MW goal of the Governor's "Million Solar Roofs" initiative per the Energy Action Plan 2005; and adds a project to the Commissions research portfolio that emphasizes innovative energy supply and end use technologies, focusing on their reliability, affordability, and environmental attributes as mandated by the Warren-Alquist Act by: • Developing the new building integrated photovoltaic system as a commercial product and testing the product in one or more demonstration projects. • Developing a lower-cost BIPV system for use with composition roofing materials.
Contractor	Sacramento Municipal Utility District
Site Location	Sacramento, CA
PIER Manager	Hassan Mohammed M.E.

This project is being conducted by the California Energy Commission's Public Interest Energy Research (PIER) program. PIER supports energy research and development that improves the quality of life in California by bringing environmentally safe, affordable, and reliable energy services and products to the marketplace.

SMUD - 5.5 PV for Emergency Power

The Problem	Events in California's recent history have shown that power outages and energy prices can have a major impact on the economy. For many businesses, the ability to maintain lighting and mission-critical electronics during a power outage would have value. The coupling of PV systems to lighting systems has been done on a small scale but there are no commercially available systems that integrate photovoltaics (PV), uninterruptible power supply (UPS), and lighting.
Proposed Research	The objectives of this project are to develop an integrated PV uninterruptible-power-supply DC lighting system that will increase lighting efficiency and provide backup power for critical business systems. PowerLight will make this possible by combining uninterruptible power systems and their capabilities with photovoltaics, DC-enabled lighting systems, and primary electronics systems not normally handled by UPS (uninterruptible power supplies), such as cash registers. Recent advances in DC lighting and other technical advances make this possible. There are many opportunities for design innovation and cost reduction.
Research Justification and Goals	Adds a project to the Commissions research portfolio that has the potential to enhance the reliability, peaking power, and storage capabilities of renewable energy as mandated by the Warren-Alquist Act by: • Developing an integrated PV uninterruptible-power-supply DC lighting system that will increase lighting efficiency and provide backup power for critical business systems.
Contractor	Sacramento Municipal Utility District
Site Location	Sacramento, CA
PIER Manager	Hassan Mohammed M.E.

This project is being conducted by the California Energy Commission's Public Interest Energy Research (PIER) program. PIER supports energy research and development that improves the quality of life in California by bringing environmentally safe, affordable, and reliable energy services and products to the marketplace.

SMUD - 5.6 Demonstrate Landfill Technology to Maximize Gas Recovery Efficiency and Peaking Power Potential

The Problem	The feasibility needs to be determined of shifting landfill gas collection to 50% during off-peak electricity demand periods and then increase collection to 150% during peak periods. Further the use of a Surface Permeable Layer and Biocover (SPLAB) to aid in improving gas collection efficiencies, instead of a synthetic landfill cover needs to be demonstrated. These operational strategies might lower the cost of landfill intermediate covers and enhance the cost-effectiveness of operating a landfill by providing high value energy to the utility.
Proposed Research	The project objective is to assess the feasibility of shifting landfill gas collection to 50% during off-peak electricity demand periods and then increase collection to 150% during peak periods. This project will also demonstrate the use of a Surface Permeable Layer and Biocover (SPLAB), instead of a synthetic landfill cover, to control fugitive emissions during the off peak periods and determine the operating parameters for storing and later removing methane at times of peak energy demand.
Research Justification and Goals	Supports California's goal to develop and implement forestry, agriculture, and waste management policies to encourage the generation of electricity from landfills, biomass and biogas per the Energy Action Plan 2005; and adds a project to the Commissions research portfolio that has the potential to enhance the reliability, peaking power, and storage capabilities of renewable energy as mandated by the Warren-Alquist Act by: • Assessing the feasibility of shifting landfill gas collection to 50% during off-peak electricity demand periods and increase collection to 150% during peak periods • Demonstrating the use of a Surface Permeable Layer and Biocover (SPLAB), instead of a synthetic landfill cover, to control fugitive emissions during the off peak periods.
Contractor	Sacramento Municipal Utility District
Site Location	,
PIER Manager	Hassan Mohammed M.E.

This project is being conducted by the California Energy Commission's Public Interest Energy Research (PIER) program. PIER supports energy research and development that improves the quality of life in California by bringing environmentally safe, affordable, and reliable energy services and products to the marketplace.

SMUD - 5.7 Feasibility Assessments of Sacramento Municipal Solid Waste to Electricity Potential

The Problem	Municipal solid waste (MSW) is the largest source of biomass in SMUD's control area. Waste collected by Sacramento City and County is currently shipped long distances to other counties or out of state. Disposing of and hauling waste incurs unnecessary costs and contributes to air pollution and traffic. Methods of converting waste to biogas or electricity are locally available.
Proposed Research	This project will provide an assessment of the viability of using local municipal solid waste for electricity generation. If implemented, the results will reduce the costs and environmental problems associated with hauling and disposing of waste, while also providing an alternative source of electricity. Roughly 60% of the City of Sacramento's municipal solid waste is presently being shipped to Nevada. This equates to about 300,000 tons per year.
Research Justification and Goals	Adds a project to the Commissions research portfolio that emphasizes innovative energy supply and end use technologies, focusing on their reliability, affordability, and environmental attributes as mandated by the Warren-Alquist Act; and supports California's goal to develop and implement forestry, agriculture, and waste management policies to encourage the generation of electricity from landfills, biomass and biogas per the Energy Action Plan 2005 by: • Assessing the feasibility of converting municipal solid wastes collected in Sacramento to renewable biogas or electricity.
Contractor	Sacramento Municipal Utility District
Site Location	Sacramento, CA
PIER Manager	Hassan Mohammed M.E.

This project is being conducted by the California Energy Commission's Public Interest Energy Research (PIER) program. PIER supports energy research and development that improves the quality of life in California by bringing environmentally safe, affordable, and reliable energy services and products to the marketplace.

SMUD - 5.8 Centralized Diary Digester with Power Generation

The Problem	While the technical feasibility for a centralized digester is known, several institutional obstacles must be overcome before a community digester can be built. Examples include the creation of cooperative business agreements between the dairy businesses, as well as arrangements for selling power to the utility.
Proposed Research	This project will develop a plan for a cooperative digester project in Elk Grove, California and provide a roadmap for other community digester projects to follow. It will provide dairies with a waste disposal option that will also generate electricity, which can be sold to a utility. If successful, the project will demonstrate a more cost-effective method for digesting dairy waste and using the resulting gas to generate electricity. This project complements the Energy Commission's dairy power production work, which is primarily focused on in-diary biogas systems.
Research Justification and Goals	Supports California's goal to develop and implement forestry, agriculture, and waste management policies to encourage the generation of electricity from landfills, biomass and biogas per the Energy Action Plan 2005; and adds a project to the Commissions research portfolio that addresses key technical and scientific barriers as mandated by the Warren-Alquist Act by: • Analyzing the barriers to a centralized dairy digester and providing a plan for establishing one in Elk Grove, California and providing a roadmap to other digesters.
Contractor	Sacramento Municipal Utility District
Site Location	Sacramento, CA
PIER Manager	Hassan Mohammed M.E.

This project is being conducted by the California Energy Commission's Public Interest Energy Research (PIER) program. PIER supports energy research and development that improves the quality of life in California by bringing environmentally safe, affordable, and reliable energy services and products to the marketplace.

SMUD - 5.9 Low Nox Power Generation for Anarobic Diary Digester

The Problem	Lean-burn reciprocating engines have been developed to run on biogas from anaerobic digesters of animal manure. In particular the Deutz TCG2015 reciprocating engine claims to reduce NOx emissions to 1.2 g/bhp-hr, while achieving an electrical efficiency of 35%. This results in a 93% reduction in NOx emissions compared to the typical Caterpillar engine. Use of this engine could facilitate the operation of electricity generators from anaerobic digesters in ozone non-attainment areas in California, where dairies and feedlots are often concentrated.
Proposed Research	RCM Digesters will test an advanced lean-burn generator technology, applicable for anaerobic digesters, on a Sacramento dairy to validate the reduced NOx emissions and efficiency claims. A site will be identified that fits the operating characteristics and has a dairy business willing to participate in the field test. Auxiliary equipment will be designed and tested on the engine before installation at the dairy. UC Davis will perform emission testing to verify emission levels using a test protocol approved by the CARB engine certification group.
Research Justification and Goals	Supports California's goal to develop and implement forestry, agriculture, and waste management policies to encourage the generation of electricity from landfills, biomass and biogas per the Energy Action Plan 2005; and to make progress in meeting the State's environmental goals and standards, including minimizing the energy sector's impact on climate change per the Energy Action Plan 2003 by: • Validating the claim of an advanced, clean conversion technology that can reduce emissions from dairy farms and utilize animal waste to generate electricity.
Contractor	Sacramento Municipal Utility District
Site Location	Sacramento, CA
PIER Manager	Hassan Mohammed M.E.

This project is being conducted by the California Energy Commission's Public Interest Energy Research (PIER) program. PIER supports energy research and development that improves the quality of life in California by bringing environmentally safe, affordable, and reliable energy services and products to the marketplace.

Structure of Salton Sea Geothermal Field from Passive Seismic Measurements

The Problem	The Salton Sea Geothermal Field (SSGF) is one of California's largest and most promising geothermal resource areas. A refined, updated SSGF geologic model will allow developers to manage the resource more cost-effectively and to expand its energy output. A better understanding of the factors controlling the accessibility and quality of the geothermal resource will aid in deciding where to target new production or injection wells and to optimize development of newer portions of the field. This will reduce costs of producing additional renewable power in California.
Proposed Research	This project will use modern interpretive methods to analyze microearthquake data. This research will lead to a better geologic model of the Salton Sea Geothermal Field, and possibly identify faults, heat sources and other features that influence the distribution of geothermal fluids. Field managers will use the results in managing the overall resource and in developing more refined projections of the field's total energy capacity. In particular, the study will lead to an updated reservoir model that will be used in making decisions about expanding the existing power plant at Unit 6 and about developing a new Unit 7.
Research Justification and Goals	Adds a project to the Commissions research portfolio that effectively balances the risks, benefits, and time horizons for various activities and investments that will provide tangible benefits for California electricity ratepayers as mandated by the Warren-Alquist Act; and has the potential to enhance the reliability, peaking power, and storage capabilities of renewable energy as mandated by the Warren-Alquist Act by
Contractor	Lawrence Livermore National Laboratory
Site Location	Livermore, CA
PIER Manager	Gail Wiggett

This project is being conducted by the California Energy Commission's Public Interest Energy Research (PIER) program. PIER supports energy research and development that improves the quality of life in California by bringing environmentally safe, affordable, and reliable energy services and products to the marketplace.

REN Active Projects from Previous Years

Biogas-fueled Low Emission HCCI Generator

The Problem	The key challenges related to landfill gas power generation such as low energy content, variable ignition characteristics (octane value), and contaminants can potentially be addressed by a biogas-fueled low-emission homogenous charge compression ignition (HCCI) engine-generator. These issues present less of a problem to HCCI engines than to conventional engines, gas turbines, and fuel cells. A demonstration of this technology is needed to prove its capabilities.
Proposed Research	The purpose of this project is to demonstrate the applicability of low-emission homogeneous charge compression ignition engine technology for landfill gas fueled power generation at the Butte County Neal Road Solid Waste Management Facility. The biogas-fueled low-emission homogenous charge compression ignition (HCCI) engine-generator project provides a low-risk path to high-efficiency, low-emissions and low-cost power generation relative to any other technology.
Research Justification and Goals	This project addresses the State of California's renewable energy goals as adopted in the Integrated Energy Policy Report 2004 Update and in the 2005 Energy Action Plan by: • Providing a low-cost high-efficiency distributed power generation engine that runs on land fill gas. • Efficiently using land fill gas to generate electricity (removing this potent greenhouse gas from the environment) while limiting the engines emissions to very low levels.
Contractor	Makel Engineering Inc./Darby B. Makel
Site Location	Chico, CA
PIER Manager	Valentino Tiangco Ph.D.

This project is being conducted by the California Energy Commission's Public Interest Energy Research (PIER) program. PIER supports energy research and development that improves the quality of life in California by bringing environmentally safe, affordable, and reliable energy services and products to the marketplace.

California Biomass Collaborative

The Problem	Though biomass is a key component of California's future energy plan, its development faces several challenging problems. Biomass energy technologies cost more than some other renewables, primarily due to low efficiency and the high cost of harvesting and transporting fuel. Biomass wastes and residues pose environmental risks, limited disposal options, and problems with public health and safety. A concerted, collaborative effort is needed to address these and other issues so that biomass technologies can be developed and consistent policies put in place to meet California's growing appetite for energy, especially during times of peak demand.
Proposed Research	As the only California-focused biomass project of its kind, the Biomass Collaborative will bring diverse stakeholders together to facilitate greater development of renewable biomass resources in the state. The Collaborative will accomplish this by creating the Collaborative; establishing a Collaborative executive board; recruiting technical staff to provide routine operating and project task support; providing a central office for biomass energy-related questions and activities; conducting executive board meetings; and holding a California Biomass Collaborative forum. Specific research tasks include creation of: a biomass facilities reporting system, a California biomass assessment, GIS data and modeling, a Collaborative website, and a needs assessment and roadmap planning.
Research Justification and Goals	Supports California's goal to evaluate and develop implementation paths for achieving renewable resource goals beyond 2010, including 33 percent renewables by 2020, in light of costbenefit and risk analysis, for all load serving entities per the Energy Action Plan 2005; and to meet the accelerated 20 percent eligible renewable goal by 2010 and a longer-term goal of 33 percent by 2020 per the Integrated Energy Policy Report 2004 Update by: • Administering a comprehensive statewide collaborative program to support and integrate efforts in advancing efficient, safe, reliable, affordable, and environmentally sound biomass systems. • Bringing together stakeholders to iron out policies and practices so that California biomass facilities can be developed and brought on line in a more timely manner.
Contractor	The Regents of the University of California - Davis
Site Location	Davis, CA
PIER Manager	Valentino Tiangco Ph.D.

This project is being conducted by the California Energy Commission's Public Interest Energy Research (PIER) program. PIER supports energy research and development that improves the quality of life in California by bringing environmentally safe, affordable, and reliable energy services and products to the marketplace.

California Wind Energy Collaborative

The Problem	California has the largest developed wind industry of any state in the nation with a total installed wind-energy generating capacity nearing 2000 megawatts. In addition, wind generated electricity provides close to 4 billion kilowatt-hours of electricity to California ratepayers every year. California's wind energy resources could provide up to four times the present wind generating capacity and help address electricity problems facing the State. Successfully developing additional wind resources so that they represent a valuable, clean, reliable and affordable part of the State's electricity system requires coordination among wind energy developers, environmental groups, electricity suppliers, and government representatives.
Proposed Research	The purpose of this project is to provide research expertise to the California Energy Commission and provide industry a forum for addressing research needs. The Collaborative manages a focused statewide program of scientific research, technical training, and technology development and deployment. The effort is conducted in close cooperation with the Energy Commission's PIER Program, industry, state and federal agencies, and other institutions to maximize wind energy benefits in California.
Research Justification and Goals	Adds a project to the Commissions research portfolio that addresses key technical and scientific barriers as mandated by the Warren-Alquist Act by: • Continuing to fund the California Wind Energy Collaborative. • Providing a forum where government, industry, academic, environmental and other stakeholders can coordinate approaches for developing wind energy systems beneficial to California's unique topology. • Providing expertise to the Energy Commission to help supplement and support wind energy development programs specific to California.
Contractor	The Regents of the University of California - Davis
PIER Manager	Mike Kane

This project is being conducted by the California Energy Commission's Public Interest Energy Research (PIER) program. PIER supports energy research and development that improves the quality of life in California by bringing environmentally safe, affordable, and reliable energy services and products to the marketplace.

Commonwealth - 1.1 Program Planning and Analysis

The Problem	Renewable resources such as biomass and solar are currently underutilized in part because of a lack of information on the reliability and efficiency of the technologies used to capture energy from them. Research is needed to demonstrate the impact of these resources utilized in a clearly defined grid area.
Proposed Research	The purpose of this project is to develop formal means of assessing the potential for meeting sub regional needs with local renewable resources for Southern California's Chino Basin, and to apply this approach to the development of biogas and solar photovoltaic generation facilities. The project will cover 1) assessments of regional energy needs, 2) assessments of biogas and solar resources, and 3) evaluation of regional grid conditions through power flow modeling. The planning phase of this project will locate five other PIER projects to develop and test various biogas and solar technologies. Data from these projects will used in the final analysis phase.
Research Results	The planning phase of this project is complete and three of the five projects are successfully running: Landfill Gas to Energy (Cancelled), Enhanced Energy Recovery Through the Use of Microturbines & Optimization of Anaerobic Digestion (Active), Dairy Waste to Energy (Active), Building Integrated PV Evaluation (Active), BI-PV on Public Facilities (Cancelled).
Research Justification and Goals	Supports California's goal to evaluate and develop implementation paths for achieving renewable resource goals beyond 2010, including 33 percent renewables by 2020, in light of costbenefit and risk analysis, for all load serving entities per the Energy Action Plan 2005 by: • Determining the most appropriate renewable resources in Southern California's Chino Basin to fully serve the electric distribution grid. • Determining the most appropriate geographic and electric system boundaries of the electric distribution mini-grid. • Assessing the technical and market electricity potential of these identified resources within the specified markets in the mini-grid. • Estimating the electric system public benefits of the full development of these renewable resources within the region of interest over the next 5 and 10 years. • Identifying candidate sites to participate in the team's RD&D pilot program activities.
Publications	The number of publications produced are too numerous to list here. For a complete list please visit: => http://pierminigrid.org and http://pierminigrid.showdata.org
Contractor	Commonwealth Energy Corporation
PIER Manager	Zhiqin (Jessica) Zhang

This project is being conducted by the California Energy Commission's Public Interest Energy Research (PIER) program. PIER supports energy research and development that improves the quality of life in California by bringing environmentally safe, affordable, and reliable energy services and products to the marketplace.

Commonwealth - 2.2 Enhanced Energy Recovery Through the Use of Microturbines & Optimization of Anaerobic Digestion

The Problem	Sewage is a renewable biomass resource that can yield biogas used by mircroturbines to produce electricity. There are 242 sewage wastewater treatment plants in California. Only 12 of them produce biogas. The gas is produced by introducing microorganisms into the sewage in a process called anaerobic digestion. The organisms convert some of the sewage into methane gas and other gases. This gas mixture must be cleaned before it can be burned to produce electricity. Significant issues involving the production of biogas and the development and optimization of biogas cleanup systems must be resolved before biogas technology can be deployed on a broader scale.
Proposed Research	The purpose of this project is to study biogas production performance improvements and to develop and optimize biogas cleanup systems. For biogas production, research will focus on evaluating the cost-effectiveness and impact on gas production of two systems for pre-treating sewage to increase biogas production. For biogas cleanup, at least three cleaning systems will be defined and optimized. One will involve hydrogen sulfide removal, gas drying, and siloxane removal. (Siloxane is a large class of silicone compounds.) A second will likely involve gas drying and siloxane removal. A third, with parameters not yet defined, will also be formulated.
Research Justification and Goals	Supports California's goal to expand efforts to improve public awareness and adoption of energy efficiency measures per the Energy Action Plan 2005; and to optimize all strategies for increasing conservation and energy efficiency to minimize increases in electricity and natural gas demand per the Energy Action Plan 2003 by: • Evaluating two treatment systems to cost-effectively increase biogas production. • Developing and testing gas cleaning systems well suited for microturbines to reduce installation, operation, and maintenance costs • Reducing biogas emissions.
Contractor	Commonwealth Energy Corporation
PIER Manager	Zhiqin (Jessica) Zhang

This project is being conducted by the California Energy Commission's Public Interest Energy Research (PIER) program. PIER supports energy research and development that improves the quality of life in California by bringing environmentally safe, affordable, and reliable energy services and products to the marketplace.

Commonwealth - 3.1 Diary Waste to Energy

The Problem	Diary animal waste and food waste (biomass) can potentially be converted into biogas for electricity production and fertilizer for agriculture use. Currently most dairy animal and food wastes are a waste management problem impacting our air, ground water, and landfills due to the lack of biogas energy systems that can process both types of waste together, and historically low waste disposal and energy prices. Increasing concern with the environmental impacts associated with these wastes and rising energy prices are contributing to a situation where developing biogas energy systems capable of processing both types of waste together can be done economically.
Proposed Research	The purpose of this project is to develop technologies that will address the lack of knowledge about the relationship between using both animal and food wastes together to produce biogas. Pilot (demonstration) scale systems will be developed to yield information on the direct relationship between the physical and chemical characteristics of these wastes and the operating parameters of the biogas producing systems. An increase in gas production is expected over current animal only waste biogas producing systems.
Research Justification and Goals	Supports California's goal to develop and implement forestry, agriculture, and waste management policies to encourage the generation of electricity from landfills, biomass and biogas per the Energy Action Plan 2005 by: • Increasing biogas production by developing technologies that combine animal and food wastes in the biogas production process. • Decreasing the impact of animal and food wastes on the environment.
Contractor	Commonwealth Energy Corporation
PIER Manager	Zhiqin (Jessica) Zhang

This project is being conducted by the California Energy Commission's Public Interest Energy Research (PIER) program. PIER supports energy research and development that improves the quality of life in California by bringing environmentally safe, affordable, and reliable energy services and products to the marketplace.

Commonwealth - 3.2 Building Integrated PV Evaluation

The Problem	Historically, the consumers of photovoltaic equipment — be they system designers, installation contractors, or end users — have relied on manufacturer literature to judge the performance and suitability of products for various applications. As a result, system designers and installation contractors are confronted with products that have no third-party evaluation and must use their end-user clients as field-test guinea pigs. When equipment performance claims are overly optimistic, the end-user is routinely disappointed with the actual performance. This situation places the contractor in a difficult position of questioning whether the products they use will perform as advertised.
Proposed Research	The purpose of this project is to develop and disseminate objective and reliable photovoltaic (PV) module and complete system performance information that will support demand-side decision making. This information may also influence supply-side business practices in ways that directly improves customer satisfaction and therefore has an indirect influence on the rate at which building-integrated photovoltaics penetrate markets for distributed generation systems. As part of this project, PV performance assessments of a variety of PV systems will be conducted over 12 months. Significant findings will be disseminated on a web site, in periodic reports and papers, and at conferences, meetings, and workshops.
Research Results	A website has been developed to explain this project in more depth, and to report on the electricity being generated by each test system.
Research Justification and Goals	Supports California's goal to establish a comprehensive solar program that includes new and existing homes and businesses per the Integrated Energy Policy Report 2004 Update; and to explore business roles in photovoltaic (PV) deployment for utilities and develop a professional inspection capability per the Integrated Energy Policy Report 2004 Update by: • Determining flaws, weak points, poor design features, etc. and offering suggested fixes. • Evaluating several candidate PV systems on public buildings. • Monitoring and reporting on system performance for 12 months. • Developing recommendations for system purchases. • Developing standardized training for system installers.
Contractor	Commonwealth Energy Corporation
PIER Manager	Zhiqin (Jessica) Zhang

This project is being conducted by the California Energy Commission's Public Interest Energy Research (PIER) program. PIER supports energy research and development that improves the quality of life in California by bringing environmentally safe, affordable, and reliable energy services and products to the marketplace.

Community Choice Aggregation Pilot Project

The Problem	Passage of recent legislation (citied below) has created significant changes in California's electricity markets. The California Renewables Portfolio Standard (RPS) requires retail sellers of electricity, including electric service providers, electrical corporations, and community choice aggregators to increase their purchase of electricity from renewable sources to twenty percent by 2017. Due to the rich supplies of indigenous renewable resources in California and adjacent states, retail electricity sellers will look increasingly at regional supplies of renewables to help achieve the RPS goals. Similarly, some communities in California have interest in developing a renewable portfolio mix that significantly exceeds the State's RPS twenty-percent goal.
Proposed Research	The purpose of this Project is to develop a template that local governments can use in evaluating the feasibility of implementing Community Choice Aggregation within the context of the California Renewables Portfolio Standard. The template will be developed based on assessments conducted with a minimum of three pilot communities. It will address technical and economic aspects of incorporating renewables under a community aggregation vehicle and lessons learned by pilot communities. A report will also be prepared on the procedures established implementing Community Choice Aggregation. Both the template and the report will be disseminated through workshops and publications.
Research Justification and Goals	Supports California's goal to meet the accelerated 20 percent eligible renewable goal by 2010 and a longer-term goal of 33 percent by 2020 per the Integrated Energy Policy Report 2004 Update; and to implement RPS standards for energy service providers and community choice aggregators so that all load serving entities are contributing proportionally to California's renewable goals per the Energy Action Plan 2005 by: • Developing a template that local governments can use to evaluate the feasibility of implementing Community Choice Aggregation within the context of the California Renewables Portfolio Standard. This project also addresses AB 117 (Migden) Chapter 838, Statues of 2002; and SB 1078 (Sher) Chapter 516, Statues of 2002..
Publications	Fed by PIMS
Contractor	Local Government Commission (LGC)
Site Location	Sacramento, CA
PIER Manager	Hassan Mohammed M.E.

This project is being conducted by the California Energy Commission's Public Interest Energy Research (PIER) program. PIER supports energy research and development that improves the quality of life in California by bringing environmentally safe, affordable, and reliable energy services and products to the marketplace.

Composite Taller Towers for Low to Moderate Wind Shear

The Problem	California has over 50,000 megawatts of wind energy capacity located in low-wind speed areas. One approach to harness this resource is to mount wind turbines on taller towers that can take advantage of the generally higher wind speeds found at higher elevations. The size of conventional tubular tower components is currently near the limit of what can be shipped over California's highway system, limiting towers to heights of 60-80 meters. This limitation as well as the high cost of shipping and installing such tall towers has inhibited development in California's low-speed wind areas.
Proposed Research	This project will develop, demonstrate and evaluate the performance of an 80 meter hybrid steel and carbon composite space frame tower with an installed 1.5 MW or larger wind turbine in a low wind speed resource area. Also to be demonstrated are the technology's ability to dampen excessive sway and vibration expected from reduced tower stiffness, and to reduce installed cost compared to conventional towers when heights exceed 80 meters. A software system for real-time intermittency management of the installed wind-turbine tower system will be developed and demonstrated in parallel with the tower demonstration.
Research Justification and Goals	Supports California's goal to meet the accelerated 20 percent eligible renewable goal by 2010 and a longer-term goal of 33 percent by 2020 per the Integrated Energy Policy Report 2004 Update by: • Designing and testing an 80 meter damped space frame tower with a commercially available utility-scale wind turbine at a site in California. - Verify tower performance with respect to loads and damping. - Obtain certification of the 80 meter tower for entry into the California market. • Developing and demonstrating a software system to allow for real-time intermittency management of the wind turbine with a firming resource to reduce impacts to the grid.
Contractor	Windtower Composites LLC
PIER Manager	Mike Kane

This project is being conducted by the California Energy Commission's Public Interest Energy Research (PIER) program. PIER supports energy research and development that improves the quality of life in California by bringing environmentally safe, affordable, and reliable energy services and products to the marketplace.

Development and Demonstration of 50 kW Small Modular Biopower System

The Problem	In a completed PIER research project*, a small modular biopower (SMB) system rated at 12 ½ kilowatts was successfully developed and demonstrated using waste forest slash and thinnings to provide utility grade power and heat. The SMB system was successfully connected to the PG&E grid. New research needs to be done to build upon this success and increase the amount of energy provided to the grid from forest biomass. *Application of Small Modular Biopower System for Power Generation from Forest Residue (Completed: 2002)
Proposed Research	The purpose of this project is to design, develop and demonstrate a 50 kilowatt continuous grid-tied biopower system for combined heat and power production using forest biomass. The biopower system will use wood waste as well as the forest biomass residue.
Research Justification and Goals	Supports California's goal to encourage the development of environmentally-sound combined heat and power resources and distributed generation projects per the Energy Action Plan 2005 by: • Designing, developing and demonstrating a 50 kilowatt modular gasification system with turndown range of 10:1 and combined heat and power using forest residue. • Adding new "green" distributed generation capacity. • Responding to customer demand for a fully automatic, environmentally certified , 50 kilowatt electric biopower system designed for continuous grid-tied operation in California.
Contractor	Community Power Corporation
Site Location	Mt. Shasta, CA
PIER Manager	Prab Sethi

This project is being conducted by the California Energy Commission's Public Interest Energy Research (PIER) program. PIER supports energy research and development that improves the quality of life in California by bringing environmentally safe, affordable, and reliable energy services and products to the marketplace.

Development and Demonstration of a Distributed Biogas Energy System Utilizing Organic Solid Wastes

The Problem	The Anaerobic Phased Solids (APS) digester technology is an advanced technology with design features that optimize bacterial degradation of organic wastes, provide efficient material handling solutions, and combine favorable features of both batch and continuous operations in a single biological system. This APS digester system has been proven to be reliable and stable at the laboratory level. However, the material handling issues, actual waste stream characteristics, digester performance at large scale, digester residual material characteristics, and net value are yet to be addressed. The testing and analyzing of the APS-Digester at scales larger than the bench-scale are needed prior to full-scale system commercialization.
Proposed Research	The overall goal of this project is to prove that the Anaerobic Phased Solids Digester, in conjunction with a clean burn engine-generator, is an environmentally sound, cost-effective distributed energy system capable of degrading high solid wastes (food residues, community green wastes, and agricultural byproducts) while producing renewable energy, soil amendments and fiber products.
Research Justification and Goals	This project addresses the State of California's renewable energy goals as adopted in the Integrated Energy Policy Report 2004 Update and in the 2005 Energy Action Plan by: • Developing distributed power generation systems. • Providing competitively priced renewable energy generation capacity to meet the "green" electricity portfolio standard while meeting organic waste landfill diversion regulations.
Contractor	The Regents of the University of California - Davis
PIER Manager	Valentino Tiangco Ph.D.

This project is being conducted by the California Energy Commission's Public Interest Energy Research (PIER) program. PIER supports energy research and development that improves the quality of life in California by bringing environmentally safe, affordable, and reliable energy services and products to the marketplace.

Feasibility Study of PV Breakthroughs

The Problem	The improvements in technology and cost of photovoltaic (PV) systems over the past 25 years have been incremental due to the evolutionary nature of research and development in the field. As a result the cost of PV power remains still high. The industry continues to require subsidies to compete economically with other sources of energy generation. PV technology needs breakthrough (revolutionary) improvements in conversion efficiency and other areas of the technology to become cost competitive and widely applied.
Proposed Research	The objective of this study is to investigate the feasibility of achieving breakthroughs in photovoltaic (PV) technology to significantly reduce the cost of PV power. Potential areas of breakthrough research will be identified, and the technical options, rationale, and likelihood of success will be assessed.
Research Justification and Goals	Supports California's goal to meet the accelerated 20 percent eligible renewable goal by 2010 and a longer-term goal of 33 percent by 2020 per the Integrated Energy Policy Report 2004 Update by: • Investigating significant cost reductions in solar photovoltaic (PV) that would result in widespread adoptions of PV in California.
Contractor	Electric Power Research Institute (EPRI)
Site Location	Palo Alto, CA
PIER Manager	Golam Kibrya Ph.D.

This project is being conducted by the California Energy Commission's Public Interest Energy Research (PIER) program. PIER supports energy research and development that improves the quality of life in California by bringing environmentally safe, affordable, and reliable energy services and products to the marketplace.

HH - Project 1.3 New Geothermal Resource Assessment

The Problem	There are several obstacles facing geothermal development today. Perhaps the most significant is that all of the large geothermal resources currently known have already been developed, with the exception of the Glass Mountain resource. Therefore, the majority of the known geothermal resource sites that remain to be developed have smaller prospects, and as a result, are of less interest to developers owing to the high up-front costs associated with geothermal development. However, because of the current high cost of natural gas and projections that that this trend will continue, development of geothermal resources may become more attractive.
Proposed Research	This project will provide a portfolio of well-characterized geothermal resources located within approximately 50 miles of the High-Voltage Direct-Current (HVDC) Intertie, thus promoting the development of new geothermal power projects and/or an increase in the generating capacity at existing geothermal projects.
Research Results	A principal outcome of the work has been the creation of the PIER Geothermal Database in MS Access. The PIER Geothermal Database includes information about the resource characteristics of 155 separate geothermal projects at 83 resource areas. It also includes embedded documents describing the methodology of the study and tables summarizing results.
Research Justification and Goals	Supports California's goal to evaluate and develop implementation paths for achieving renewable resource goals beyond 2010, including 33 percent renewables by 2020, in light of costbenefit and risk analysis, for all load serving entities per the Energy Action Plan 2005; and to meet the needs for new generation first with renewable energy resources and distributed generation per the Energy Action Plan 2003 by: • Providing a portfolio of well-charaterizedcharacterized geothermal resources located within approximately 50 miles of the HVDC Intertie.
Publications	New Geothermal Site Identification and Qualification ==>www.energy.ca.gov/pier/renewable/finalreport.htm
Contractor	Hetch Hetchy Water and Power, San Francisco
PIER Manager	Valentino Tiangco Ph.D.

This project is being conducted by the California Energy Commission's Public Interest Energy Research (PIER) program. PIER supports energy research and development that improves the quality of life in California by bringing environmentally safe, affordable, and reliable energy services and products to the marketplace.

HH - Project 2.1 Upgrading Existing Geothermal Sites

The Problem	One obstacle to developing geothermal resources is the high upfront costs (e.g. exploration and drilling) associated with geothermal development. An increase in the amount of geothermal utilization may be achievable without any exploration or new development risk.
Proposed Research	The purpose of this project is to assess the prospects of improving the output of each of the 45 existing geothermal facilities in California, including consideration of improving access to the geothermal resources as well as improving the design and operation of the power plants.
Research Results	A number of possible improvements in resource supply and surface facilities for California geothermal projects are identified. The report lays the groundwork for evaluating the applicability of these improvements by presenting matrices of geothermal projects and the potential improvements that may apply to them. As of 2005, capital costs for the new geothermal facilities in California (including both power plants and well field development) are likely to be in the range of $2900 to $3500 per kilowatt. Operating and maintenance costs are in the range of 1.8 to 2.5¢ per kilowatt hour.
Research Justification and Goals	Supports California's goal to meet the accelerated 20 percent eligible renewable goal by 2010 and a longer-term goal of 33 percent by 2020 per the Integrated Energy Policy Report 2004 Update; and to monitor and support existing renewable resources, including facilitating repowering projects and addressing contract renewals in a timely fashion per the Energy Action Plan 2005 by: • Describing and quantifying potential improvements in geothermal resource supply and surface facilities. • Estimating capital costs and operating and maintenance costs.
Contractor	Hetch Hetchy Water and Power, San Francisco
PIER Manager	Valentino Tiangco Ph.D.

This project is being conducted by the California Energy Commission's Public Interest Energy Research (PIER) program. PIER supports energy research and development that improves the quality of life in California by bringing environmentally safe, affordable, and reliable energy services and products to the marketplace.

HH - Project 3.1 Distributed Generation Assessment

The Problem	Even though renewable distributed generation (RDG) is an important part of California's long-range energy plan, little research has been done to date on its reliability or its economic and engineering viability.
Proposed Research	The purpose of this project is to develop a methodology for evaluating potential renewable distributed generation (RDG) applications within the state's publicly owned utilities' planning processes, specifically the electricity distribution systems of the City of Palo Alto, the City of Alameda, the Sacramento Municipal Utility District, and the municipally owned portion of the City and County of San Francisco's system. Specific project objectives address identification of the best locations for RDG on local utility systems; reliability impacts; and assessment of the impacts of load growth and generator performance uncertainty on the results.
Research Results	In general, it was found that renewable distributed generation (RDG) can be an effective component of a multi-attribute portfolio of resources. Specific key findings included the determination that: larger facilities are generally more cost-effective than smaller facilities; RDG's distribution system value is highly localized; and maps are the most effective method to demonstrate results such as losses, power flow, local distribution system benefits, and optimum RDG locations.
Research Justification and Goals	This project addresses the State of California's renewable energy goals, as adopted in the Integrated Energy Policy Report 2004 Update and in the 2005 Energy Action Plan, by: • Developing final recommendations for each publicly owned utility through engineering, economic, load and resource, reliability, and uncertainty analyses. • Establishing and promoting greater understanding of the merits of RDG in utility distribution systems. • Developing an established and verified methodology and tools applicable to any electricity distribution network.
Publications	Renewable Distributed Generation Assessment: San Francisco Public Utilities Commission / Hetch Hetchy Case Study ==>http://www.energy.ca.gov/pier/final_project_reports/CEC-500-2006-002.htm
Contractor	Hetch Hetchy Water and Power, San Francisco
PIER Manager	Valentino Tiangco Ph.D.

This project is being conducted by the California Energy Commission's Public Interest Energy Research (PIER) program. PIER supports energy research and development that improves the quality of life in California by bringing environmentally safe, affordable, and reliable energy services and products to the marketplace.

HH - Project 3.2 Biomass Project Distributed Generation Value Analysis

The Problem	Barriers exist to the construction of small generators at the sites of large users.
Proposed Research	The purpose of this project is to develop small modular biomass electricity systems within the service territories of publicly owned utilities. The Truckee Donner Public Utility District (TDPUD) is the initial test case, and results will ultimately be analyzed, modified, and expanded to other publicly owned utilities. The primary technology to be studied will be small, modular biomass energy generators in microgeneration (15-50 kW) and small generation (1-10 MW).
Research Results	The project documented the costs, energy generation, economic performance, technical performance, emissions and other criteria associated with running the BioMax technology developed by Community Power Corporation (CPC) of Littleton, Colorado in a small load center. To accomplish the task goals McNeil 1) coordinated with the Recreation Center, CPC, and TDPUD to analyze specific details of the project (host site needs, utility interconnection agreements, safety, fuel supply, operating requirements, permits, etc.), 2) conducted engineering design studies and technology modifications as needed, and 3) made arrangements for system fabrication, procurement, financing and installation.
Research Justification and Goals	Supports California's goal to encourage the development of environmentally-sound combined heat and power resources and distributed generation projects per the Energy Action Plan 2005; and to enable consumers and businesses to supply their own generation through the deployment of distributed generation and cogeneration per the Integrated Energy Policy Report 2003 by: • Developing a coordinated set of advanced renewable energy technologies that together will help make renewables part of a more affordable diverse electricity system. • Developing clean renewable energy technologies that have no air polluting emissions. • Enhancing research and development of renewable energy technologies and finding renewable energy applications that benefit California ratepayers.
Contractor	Hetch Hetchy Water and Power, San Francisco
PIER Manager	Valentino Tiangco Ph.D.

This project is being conducted by the California Energy Commission's Public Interest Energy Research (PIER) program. PIER supports energy research and development that improves the quality of life in California by bringing environmentally safe, affordable, and reliable energy services and products to the marketplace.

HH - Project 4.1 Solar Thermal Parabolic Trough Powerplant

The Problem	Though California has the most abundant solar resources in the United States, the cost of building and operating solar facilities has to date been prohibitive.
Proposed Research	The purpose of this project is to evaluate the feasibility of solar thermal power plants for a group of publicly owned utilities in California. Specifically, the research will: evaluate advanced solar field and system configuration concepts; determine required power capacities and production schedules, using dispatchable solar thermal power plants; identify optimal and alternative sites for these facilities; and evaluate interconnection to the Pacific HVDC intertie in the Owens Valley/Mojave Desert corridor.
Research Results	Thousands of gigawatts of electricity could potentially be generated in California, and it will be increasingly economic to harvest this abundant renewable resource as gas prices continue to rise. Solar energy's near-term costs suggest a crossover with fossil-fueled generation costs within about 5 to 10 years. Pro-renewable energy policies and market conditions should together create a growing number of opportunities for the state's publicly owned utilities to build and operate solar facilities.
Research Justification and Goals	Supports California's goal to diversify fuels and fuel sources of petroleum and natural gas with alternative fuels and renewable energy per the Integrated Energy Policy Report 2003; and to improve environmental quality while meeting the wide-ranging demand for energy per the Integrated Energy Policy Report 2003 by: • Developing a coordinated set of advanced renewable energy technologies that together will help make renewables part of a more affordable and diverse electricity system. • Developing clean renewable energy technologies that have no air polluting emissions. • Advancing research and development of renewable energy technologies and finding renewable energy applications that benefit California ratepayers.
Publications	Solar Thermal Parabolic Trough Electric Power Plants for Electricity Utilities in California ==>http://www.energy.ca.gov/pier/final_project_reports/CEC-500-2005-175.htm
Contractor	Hetch Hetchy Water and Power, San Francisco
PIER Manager	Valentino Tiangco Ph.D.

This project is being conducted by the California Energy Commission's Public Interest Energy Research (PIER) program. PIER supports energy research and development that improves the quality of life in California by bringing environmentally safe, affordable, and reliable energy services and products to the marketplace.

HH - Project 4.2 Hybrid Biofuel/Natural Gas

The Problem	More on-site generation is needed for large energy users in order to reduce congestion on the state's transmission and distribution electricity lines.
Proposed Research	The purpose of this project is to evaluate the development of bio-fueled and natural gas co-fired modular Stirling engine systems for distributed and on-site generation applications. The objectives of this project include completion of research and development for a demonstration prototype dual-fueled, bio and natural gas, Stirling engine(s) generator set. This system will have a generating capacity of approximately 90 kilowatts capable of operating in accordance with California and Federal interconnection and emissions standards and establishing parameters (technical and economic) for the successful commercialization of the dual-fuel prototype(s).
Research Results	A stop order was issued to stop additional work on this project. The natural gas distributed power market growth was slower than expected and there is currently not a business opportunity for the proposed modular system for on-site generation applications.
Research Justification and Goals	Supports California's goal to meet new generation needs first by renewable energy resources and distributed generation per the Energy Action Plan 2003; and to diversify fuels and fuel sources of petroleum and natural gas with alternative fuels and renewable energy per the Integrated Energy Policy Report 2003 by: • Locating significant amounts of generation where it is used, reducing congestion on utility transmission and distribution electricity lines and infrastructure. • Increasing the state's overall energy reliability by reducing the amount of electricity that must be transported long distances.
Contractor	Hetch Hetchy Water and Power, San Francisco
PIER Manager	Valentino Tiangco Ph.D.

This project is being conducted by the California Energy Commission's Public Interest Energy Research (PIER) program. PIER supports energy research and development that improves the quality of life in California by bringing environmentally safe, affordable, and reliable energy services and products to the marketplace.

HH - Project 4.3 Energy Storage for Renewable Generation

The Problem	Large wind farm installations generally deliver energy and displace use of non-renewable energy. In most cases other sources of energy and power supply are necessary in the event that the wind is not blowing. This usually results in installing twice the generating capacity for a firm supply of electricity. PV installations suffer from this same problem. Energy storage could maximize effective use of renewable energy projects. Large-scale renewable energy projects will prove more competitive against large-scale fossil fuel resource projects and may be made more efficient if reasonable priced energy storage capability is available.
Proposed Research	The purpose of this project is to address how the application of energy storage capability might increase the economic effectiveness and value of wind and PV renewable energy sources. Particularly it will focus on potential interactions with the HVDC intertie project, but methods used will also apply to other possible development locations. The project will examine: 1) Realistic, available energy storage options quantified in terms of their cost effectiveness. Non cost effective options will be discarded; 2) Sizing and location of new energy storage facilities if cost effective; and 3) Possible hydroelectric generating companies conceivably amenable to a contract for energy storage.
Research Justification and Goals	Supports California's goal to evaluate and develop implementation paths for achieving renewable resource goals beyond 2010, including 33 percent renewables by 2020, in light of costbenefit and risk analysis, for all load serving entities per the Energy Action Plan 2005; and to meet the accelerated 20 percent eligible renewable goal by 2010 and a longer-term goal of 33 percent by 2020 per the Integrated Energy Policy Report 2004 Update by: • Investigating how the application of energy storage capability might increase the value of renewable energy, specifically wind.
Contractor	Hetch Hetchy Water and Power, San Francisco
PIER Manager	Valentino Tiangco Ph.D.

This project is being conducted by the California Energy Commission's Public Interest Energy Research (PIER) program. PIER supports energy research and development that improves the quality of life in California by bringing environmentally safe, affordable, and reliable energy services and products to the marketplace.

HH- Project 1.1 Feasibility of Interconnecting Pacific HVDC Intertie

The Problem	Areas with significant wind, geothermal, hydro, and solar energy potential along the California-Nevada border are currently untapped sources of significant renewable energy resources. The Pacific high-voltage direct-current (HVDC) intertie passes directly through these areas, but existing technologies to tap into HVDC systems have been complex and prohibitively expensive compared to the benefit of developing these new energy sources.
Proposed Research	The purpose of this project is to explore the technical and financial aspects of interconnection to the Pacific high-voltage direct-current (HVDC) intertie to bring new wind and geothermal resources to the California market. The HVDC intertie near the California-Nevada border may present opportunities to bring several thousand megawatts of new geothermal and wind resources into California.
Research Justification and Goals	Supports California's goal to take a proactive approach to transmission planning for renewables development per the Integrated Energy Policy Report 2004 Update; and to improve assessment of transmission costs and benefits per the Integrated Energy Policy Report 2004 Update by: • Determining costs to interconnect a combination of wind and geothermal generation resources to the Pacific HVDC Intertie at a single and multiple points near the Nevada-California border • Determining the available transfer capacity and technical feasibility of any potential AC transmission interconnection points and options, potentially an alternative strategy to Pacific HVDC Intertie interconnection • Determining the optimal interconnection point(s) based on technical analysis of available geothermal and wind resources near the California-Nevada and Oregon borders • Determining the relative costs and advantages of developing a standalone AC collector grid for these renewable energy resources versus using the existing AC collector grid
Contractor	Hetch Hetchy Water and Power, San Francisco
PIER Manager	Valentino Tiangco Ph.D.

This project is being conducted by the California Energy Commission's Public Interest Energy Research (PIER) program. PIER supports energy research and development that improves the quality of life in California by bringing environmentally safe, affordable, and reliable energy services and products to the marketplace.

HH- Project 1.2 New Wind Site ID and Qualification

The Problem	Three regions in California have emerged as the dominant wind resource areas: Altamont Pass east of San Francisco, San Gorgonio near Palm Springs and Tehachapi Pass in the Bakersfield area. Though additional capacity may exist in each of the above resource areas, identification of other economically viable wind resources capable of delivering power to the California grid is needed if wind is to help meet California's goal of 20 percent generation from renewables by 2010. This would include both in-state resources and out-of-state resource with access to interstate transmission capability.
Proposed Research	The purpose of this project is to identify new developable wind energy generation sites in California and neighboring states that can access the Pacific High-Voltage Direct-Current (HVDC) Intertie and that may also add value to the generation and energy storage capabilities of the Central Valley Project. New sites will be analyzed and qualified based on four key criteria: (1) magnitude of the recoverable resource, (2) availability of transmission, (3) environmental and permitting issues and (4) project economics. Meteorological towers are to be installed and winds monitored at up to six candidate sites for a period of at least one year.
Research Results	Seven potential resource areas satisfying the criteria have been identified, five of which were recommended for further monitoring. Currently, four meteorological towers are installed and collecting data, including two sites in California and two in Southern Oregon.
Research Justification and Goals	Supports California's goal to meet the accelerated 20 percent eligible renewable goal by 2010 and a longer-term goal of 33 percent by 2020 per the Integrated Energy Policy Report 2004 Update; and to meet the needs for new generation first with renewable energy resources and distributed generation per the Energy Action Plan 2003 by: • Identifying over 2000 megawatts of new renewable generation to supply California. • Increasing utilization of existing transmission assets.
Contractor	Hetch Hetchy Water and Power, San Francisco
PIER Manager	Valentino Tiangco Ph.D.

This project is being conducted by the California Energy Commission's Public Interest Energy Research (PIER) program. PIER supports energy research and development that improves the quality of life in California by bringing environmentally safe, affordable, and reliable energy services and products to the marketplace.

Hydrogen-Assisted Lean Operation for Biogas Reciprocating Engines

The Problem	Research needs to be done on extending the lean combustion limit and operating a biogas-fueled reciprocating internal combustion engines under leaner conditions for the purpose of substantially reducing nitrogen oxides emission.
Proposed Research	The purpose of this project is to develop and demonstrate a nitrogen oxides control technology that can be applied to biogas-fueled reciprocating internal combustion engines to achieve greater than 90 percent nitrogen oxides reduction from the state-of-the-art for lean-burn biogas-fueled engines that are currently designated best available control technology. The technology relies on the addition of hydrogen-containing biogas reformate to the engine's biogas fuel, which in turn allows the lean limit of the combustion process to be extended to much higher air/fuel ratios.
Research Justification and Goals	This project addresses the State of California's renewable energy goals as adopted in the Integrated Energy Policy Report 2004 Update and in the 2005 Energy Action Plan by: • Developing a coordinated set of advanced renewable energy technologies that together will help make renewables part of a more affordable diverse electricity system. • Developing clean renewable energy technologies that have no air polluting emissions.
Contractor	TIAX LLC
Site Location	Irvine, CA & Cupertino, CA
PIER Manager	Valentino Tiangco Ph.D.

This project is being conducted by the California Energy Commission's Public Interest Energy Research (PIER) program. PIER supports energy research and development that improves the quality of life in California by bringing environmentally safe, affordable, and reliable energy services and products to the marketplace.

Landfill Gas Fired 250 kW Microturbine

The Problem	The introduction of a larger microturbine to the landfill gas market would reduce the installation cost of the technology on a dollar per kilowatt (kW) basis and enable the technology to be used for larger projects. Ingersoll-Rand is in the microturbine business and has the marketing, manufacturing, distribution and service network capability to support the immediate commercial deployment of a successfully demonstrated beta unit.
Proposed Research	The purpose of this project is to demonstrate the ability of a newly developed 250 kilowatt (kW) microturbine to successfully and reliably utilize landfill gas as a fuel. At the present time, the largest microturbine that has been proven in landfill gas service is a 70kW microturbine.
Research Results	250 kW microturbine has been installed, debugged and commissioned. This unit has completed a six month test demonstration.
Research Justification and Goals	Supports California's goal to develop and implement forestry, agriculture, and waste management policies to encourage the generation of electricity from landfills, biomass and biogas per the Energy Action Plan 2005; and to evaluate and develop implementation paths for achieving renewable resource goals beyond 2010, including 33 percent renewables by 2020, in light of costbenefit and risk analysis, for all load serving entities per the Energy Action Plan 2005 by: • Providing a low-cost high-efficiency distributed power generation microturbine that runs on land fill gas (LGF). • Efficiently using LFG to generate electricity (removing this potent greenhouse gas from the environment) while limiting emissions to very low levels.
Contractor	Stearns, Conrad and Schmidt Consulting Engineers, Inc.
Site Location	Burbank, CA
PIER Manager	Prab Sethi

This project is being conducted by the California Energy Commission's Public Interest Energy Research (PIER) program. PIER supports energy research and development that improves the quality of life in California by bringing environmentally safe, affordable, and reliable energy services and products to the marketplace.

Ocean Wave Energy Resource Assessment for California

The Problem	A 1991 evaluation by Pacific Gas and Electric estimated an average of 30 to 40 kilowatts per linear meter of available energy in ocean waves off California's northern coast. Harvesting twenty percent of northern California's potential wave energy could provide upwards of 4000 megawatts of electricity.
Proposed Research	The purpose of this project is to conduct an assessment of ocean wave energy resources off California's coast and determine the technical, economic, and environmental feasibility of using ocean wave energy systems to provide electricity to the State's electricity system. In addition, the project will identify potential sites best suited for ocean wave energy development along the coastline.
Research Justification and Goals	Adds a project to the Commissions research portfolio that addresses key technical and scientific barriers as mandated by the Warren-Alquist Act by: • Developing renewable energy technologies that feed low-cost electricity into the grid and can be used in remote locations where it is expensive to bring in power lines. • Helping further the development of a renewable energy technology that can generate electricity 24 hours a day. • Providing information that can lead to deployment of an environmentally clean electric generation technology.
Contractor	California State University, San Diego
PIER Manager	Mike Kane

This project is being conducted by the California Energy Commission's Public Interest Energy Research (PIER) program. PIER supports energy research and development that improves the quality of life in California by bringing environmentally safe, affordable, and reliable energy services and products to the marketplace.

Photovoltaic Power Generation with Direct Current Applications

The Problem	Traditional use of photovoltaic (PV) power in grid-connected applications involves the use of inverters to convert the PV modules' direct-current (DC) output to alternating-current (AC) power. These inverters add to system capital cost and lower system efficiency due to conversion losses. Furthermore, they add additional downtime and repair costs to grid-connected PV installations due to reliability and durability issues. Direct use of the DC power would improve system economics by avoiding inverters altogether and their associated costs.
Proposed Research	The objective of this project is to improve the economics of photovoltaic (PV) energy by investigating, developing, and demonstrating approaches for supplying PV generated direct-current (DC) supplemental power to grid connected devices without interference to the alternating-current (AC) power. Potential devices that could receive supplemental DC solar power includes adjustable-speed motor drives, building lighting systems, appliances with switch-mode power supplies, heating systems, and uninterruptible power supplies. This project includes a feasibility study, hardware development and a completed demonstration with performance results.
Research Justification and Goals	Supports California's goal to meet the accelerated 20 percent eligible renewable goal by 2010 and a longer-term goal of 33 percent by 2020 per the Integrated Energy Policy Report 2004 Update by: • Improving the cost-effectiveness of photovoltaic power. • Demonstrating the application of photovoltaic direct-current (DC) in grid-connected alternating-current (AC) devices.
Contractor	Electric Power Research Institute (EPRI)
Site Location	Palo Alto, CA
PIER Manager	Golam Kibrya Ph.D.

This project is being conducted by the California Energy Commission's Public Interest Energy Research (PIER) program. PIER supports energy research and development that improves the quality of life in California by bringing environmentally safe, affordable, and reliable energy services and products to the marketplace.

SMUD - 1.1 Technology Assessment for Advanced Biomass Power Generation

The Problem	Fundamental work in biomass combustion and gasification has been the subject of research over the last two decades, along with applied research relating to the implementation of improvements in fuel processing for power generation from straw and other high fouling biomass materials. Preliminary reviews of technology developments outside of California have been conducted. A technical assessment specific to California needs to be done. Sufficient demonstration and commercial information already exists to conduct such an assessment for identifying near and long term advanced generation options using biomass in California.
Proposed Research	A technical assessment of advanced and novel, biomass power generation will be conducted to increase the efficiency of conversion and improve the opportunities for agricultural and solid waste fuels not currently utilized in California for reasons of ash fouling, emissions, or cost. The assessment will include a literature review and industry survey of facilities and applications throughout the world. Promising designs and concepts will be identified along with enhancements needed for potential application in the Sacramento region to meet technical and environmental constraints.
Research Justification and Goals	Supports California's goal to meet the accelerated 20 percent eligible renewable goal by 2010 and a longer-term goal of 33 percent by 2020 per the Integrated Energy Policy Report 2004 Update; and to align RD&D funding with public policy goals for new renewable technologies and greenhouse gas mitigation technologies, including efficiency, renewable generation technologies, and energy storage per the Energy Action Plan 2005 by: • Determining feasibility in the Sacramento region of promising commercial biomass power generation systems used in Europe and elsewhere, including solid fueled, gasification, liquefaction, and landfill gas technologies. • Establishing environmental performance of these novel and advanced biomass technologies for application in the region. • Identifying sites, resources, and scales of biomass power generation that might be developed over the near and long term. • Initiating industry collaborations for concept evaluation
Contractor	Sacramento Municipal Utility District
Site Location	Sacramento, CA
PIER Manager	Hassan Mohammed M.E.

This project is being conducted by the California Energy Commission's Public Interest Energy Research (PIER) program. PIER supports energy research and development that improves the quality of life in California by bringing environmentally safe, affordable, and reliable energy services and products to the marketplace.

SMUD - 1.2 PV Markets and Technologies (SEPA)

The Problem	SMUD is the leading energy service provider in the world in using solar energy for its system requirements and for its customers. Although its solar program could continue to expand, it is appropriate to consider what it might do to expand the provision of solar services through private solar energy providers, beyond SMUD's own installations of PV.
Proposed Research	This project will utilize Solar Electric Power Association's (SEPA) collective experience with commercialization efforts and business strategies to assess PV project goals and plans, and to analyze and recommend the next phase of commercialization for energy service providers like SMUD that have established a successful solar energy market position in their region with significant customer interest in solar energy. The result of this work will be national technical and market experience applied to the SMUD PV R&D program. This will result in less duplication of effort, funding of work already underway, except where competitive development is desired.
Research Justification and Goals	Adds a project to the Commissions research portfolio that provides for the future market utilization of projects funded through the program as mandated by the Warren-Alquist Act; and ensures that prior, current, and future research not be unnecessarily duplicated as mandated by the Warren-Alquist Act by: • Obtaining the best technical and market input to the planning and setting of initial goals of PV projects in this program. • Developing the next options for solar energy market expansion in the SMUD region. • Having this program benefit from the $75 million TEAM-UP business model and hardware deployment program funded by the U.S. Department of Energy.
Contractor	Sacramento Municipal Utility District
Site Location	Sacramento, CA
PIER Manager	Hassan Mohammed M.E.

This project is being conducted by the California Energy Commission's Public Interest Energy Research (PIER) program. PIER supports energy research and development that improves the quality of life in California by bringing environmentally safe, affordable, and reliable energy services and products to the marketplace.

SMUD - 1.3 Utility System Capacity & Customer Demand Value

The Problem	In Sacramento, the summer peak-period rate load profiles track available sunlight and peak outdoor temperatures, but the peak is shifted about two hours into the evening by thermal lag and residential air conditioning. Sacramento's utility SMUD rate structures do not adequately reward PV owners who orient their PV arrays to match the actual system peak.
Proposed Research	This project will analyze previously unquantified financial benefits for photovoltaics using geosynchronous orbiting earth satellite (GOES) satellite data, verified by electric meter data, to determine the potential peak and capacity value of PV. This data will then be used to help Sacramento's utility SMUD determine rate adjustments to reward customers who help reduce system peak.
Research Justification and Goals	Supports California's goal to address peak demand challenges by linking photovoltaic (PV) installations with price responsive tariffs and advanced metering per the Integrated Energy Policy Report 2004 Update; and adds a project to the Commissions research portfolio that has the potential to enhance the reliability, peaking power, and storage capabilities of renewable energy as mandated by the Warren-Alquist Act by: • Using geosynchronous orbiting earth satellite (GOES) data to determine the potential peak and capacity value of PV. • Assuming PV installations for various types of customers and analyzing the potential benefits from both load factor and power factor manipulation. • Implementing findings of value into SMUD's accounting system, rates office, and business office.
Contractor	Sacramento Municipal Utility District
Site Location	Sacramento, CA
PIER Manager	Hassan Mohammed M.E.

This project is being conducted by the California Energy Commission's Public Interest Energy Research (PIER) program. PIER supports energy research and development that improves the quality of life in California by bringing environmentally safe, affordable, and reliable energy services and products to the marketplace.

SMUD - 1.4 Performance Indexing of PV Systems

The Problem	A database of grid-connected PV systems in the Sacramento area is available. Current monthly meter data for energy production by each system is also available, but PV system's required information is not always correct or not available. An automated process needs to be developed for gathering hourly insolation (the amount of solar radiation which strikes a given surface on Earth) and weather data to compare actual and predicted energy production for each PV system on a monthly basis.
Proposed Research	An automated monthly performance indexing system will be developed and implemented for each PV system in SMUD's service area that is interconnected to its grid. Based on system meter readings, and daily weather data, the performance indexing system will automatically generate a monthly exception report to compare actual and predicted energy production for each PV system. The results will then be used to identify under-performing PV systems.
Research Justification and Goals	Adds a project to the Commissions research portfolio that has the potential to enhance the reliability, peaking power, and storage capabilities of renewable energy as mandated by the Warren-Alquist Act; and supports California's goal to explore business roles in photovoltaic (PV) deployment for utilities and develop a professional inspection capability per the Integrated Energy Policy Report 2004 Update by: • Forming a reliable basis for calculating total hourly PV generation. • Providing comprehensive and current information on the operating health of each grid interconnected PV system.
Contractor	Sacramento Municipal Utility District
Site Location	Sacramento, CA
PIER Manager	Hassan Mohammed M.E.

This project is being conducted by the California Energy Commission's Public Interest Energy Research (PIER) program. PIER supports energy research and development that improves the quality of life in California by bringing environmentally safe, affordable, and reliable energy services and products to the marketplace.

SMUD - 1.5 Assessment: Worst Case Climatic Conditions

The Problem	The worst-case long-term cloudiness conditions for the Sacramento area are not known. This information is needed before stand-alone PV systems can be considered for traffic signals. To properly evaluate and market renewable-based cooling systems, an accurate assessment of worst-case cooling conditions is needed, which includes combinations of both temperature and humidity.
Proposed Research	Historical weather records for Sacramento-area will be analyzed to determine worst-case weather conditions for photovoltaic systems and air-conditioning systems. For PV systems, cloudiness from storms and fog will be examined. For cooling systems, a combination of maximum air temperature and humidity will be examined. This effort will help to determine the impact of winter weather on the performance of mission-critical PV systems, such as: traffic signals, transportation-related signage, retail signage, rural signage, streetlights, and parking lot lights. The effort will also determine the impact of the summer weather on the sizing and performance of air-conditioning equipment of various types, including conventional and renewable.
Research Justification and Goals	Adds a project to the Commissions research portfolio that has the potential to enhance the reliability, peaking power, and storage capabilities of renewable energy as mandated by the Warren-Alquist Act by: • Developing data that will ultimately make it possible for PV to be used in mission-critical applications without being connected to the grid. • Developing data that will make it possible to correctly size and evaluate renewable-based air-conditioning equipment. • Developing weather data that can be used to determine the impact of winter weather on the performance of mission-critical PV systems. • Developing weather data that can be used to determine the impact of summer weather on the sizing and performance of air-conditioning equipment of various types.
Contractor	Sacramento Municipal Utility District
Site Location	Sacramento, CA
PIER Manager	Hassan Mohammed M.E.

This project is being conducted by the California Energy Commission's Public Interest Energy Research (PIER) program. PIER supports energy research and development that improves the quality of life in California by bringing environmentally safe, affordable, and reliable energy services and products to the marketplace.

SMUD - 2.1 Accelerated Anaerobic Composting Project for Energy Generation

The Problem	Previous landfill bioreactor studies provided encouraging results, but the amount of instrumentation used and the level of monitoring done during these studies did not provide the technical data necessary to allay the concerns of regulators and provide the technical basis for adoption of the technology by the solid waste to energy industry.
Proposed Research	The County of Yolo Planning and Public Works Department (Yolo County) will construct, operate, and collect technical data from a full-scale landfill bioreactor to attain and demonstrate a number of environmental and cost savings benefits. The goal of this project is to provide technical and economic data and solutions to the identified permitting conditions that constrain the advancement of this technology into the commercialization phase.
Research Justification and Goals	Supports California's goal to develop and implement forestry, agriculture, and waste management policies to encourage the generation of electricity from landfills, biomass and biogas per the Energy Action Plan 2005 by: • Demonstrating a full-scale bioreactor landfill operation to accelerate methane generation through liquid addition without impacting groundwater. • Monitoring a full-scale bioreactor landfill to collect data for analysis. • Improving efficiency of methane gas capture without impacting air quality. • Providing project technical data to regulatory agencies. • Determining the cost-benefit ratio for a full-scale bioreactor landfill operation.
Contractor	Sacramento Municipal Utility District
Site Location	Woodland, CA
PIER Manager	Hassan Mohammed M.E.

This project is being conducted by the California Energy Commission's Public Interest Energy Research (PIER) program. PIER supports energy research and development that improves the quality of life in California by bringing environmentally safe, affordable, and reliable energy services and products to the marketplace.

SMUD - 3.1 UNI-SOLAR PV Roofing

The Problem	There are significant drawbacks to current rooftop PV systems. Conventional solar modules are costly to produce and handle in large part because of aluminum and glass components. Existing building integrated PV products are factory integrated onto metal building panels making them costly to ship and difficult to retrofit onto existing buildings and structures.
Proposed Research	UNI-SOLAR will develop an inexpensive, easy, and quick to install building integrated photovoltaic roofing system which can be applied to a new or existing roof that has a plywood deck, particleboard deck, or any other type of solid continuous under-structure.
Research Justification and Goals	Supports California's goal to establish a comprehensive solar program that includes new and existing homes and businesses per the Integrated Energy Policy Report 2004 Update; and adds a project to the Commissions research portfolio that emphasizes innovative energy supply and end use technologies, focusing on their reliability, affordability, and environmental attributes as mandated by the Warren-Alquist Act by: • Creating a low cost, dual function photovoltaicsphotovoltaic roofing using UNI-SOLAR large area thin film technology. • Providing Class A fire rating and UL listing on all UNI-SOLAR building-integrated photovoltaic (BIPV) products. • Developing manuals, videos and training program for designers, installers and users. • Accommodating the widest range of residential and light commercial roofs and Developing fast, easy installation methods. • Developing fast and easy installation methods.
Contractor	Sacramento Municipal Utility District
Site Location	Sacramento, CA
PIER Manager	Hassan Mohammed M.E.

This project is being conducted by the California Energy Commission's Public Interest Energy Research (PIER) program. PIER supports energy research and development that improves the quality of life in California by bringing environmentally safe, affordable, and reliable energy services and products to the marketplace.

SMUD - 3.2 BIPV Mounting Approaches for New Construction

The Problem	Design professionals are presently forced to develop building integrated photovoltaic (BIPV) approaches from scratch, possibly duplicating work that has been done elsewhere. Lack of a standardized and flexible BIPV system design forms a potential barrier for those wanting BIPV.
Proposed Research	The purpose of this project is to investigate all building integrated photovoltaic (BIPV) products developed and sold in large quantities in Europe and Japan, and to develop and document BIPV mounting approaches for new building construction.
Research Results	Special focus was put on the InDax-100 array, manufactured in Germany by RWE Schott Solar GmbH. A basic design using the InDax-100 array was developed and it was evaluated for use in the U.S. based on such factors as UL listing, adaptability to U.S. roof construction methods, adaptability to U.S. roofing tiles, wiring, and NEC code compliance.
Research Justification and Goals	Supports California's goal to establish a comprehensive solar program that includes new and existing homes and businesses per the Integrated Energy Policy Report 2004 Update; and adds a project to the Commissions research portfolio that emphasizes innovative energy supply and end use technologies, focusing on their reliability, affordability, and environmental attributes as mandated by the Warren-Alquist Act by: • Support the use of Building Integrated PV Systems (BIPV) in new construction. • Document a specific set of approaches that can be readily adapted by design professionals on future projects.
Contractor	Sacramento Municipal Utility District
Site Location	Sacramento, CA
PIER Manager	Hassan Mohammed M.E.

This project is being conducted by the California Energy Commission's Public Interest Energy Research (PIER) program. PIER supports energy research and development that improves the quality of life in California by bringing environmentally safe, affordable, and reliable energy services and products to the marketplace.

SMUD - 3.3 SunTile: Mainstreaming PV for Residential Rooftops

The Problem	In September 1999, with funding from the National Institute of Standards and Technology (NIST), and the Small Business Innovation Research Program (SBIR) of DOE a prototype photovoltaic (PV) module was developed. It operated at temperatures at or below that of competing, rack-mounted PV modules. Additionally, heat flow into the rooftop was nearly eliminated by the module. Further development is needed to make it market ready specifically in the areas of cost, ease and speed of installation, electrical performance, and thermal performance. A demonstration of the module is needed to gain construction industry acceptance.
Proposed Research	This project will develop a market-ready building integrated photovoltaic (PV) system for residential sloped roofs in the new construction market. The product will be designed to improve upon existing residential PV roofing products in terms of cost, ease, and speed of installation, electrical performance, and thermal performance. A full-scale demonstration system will be installed and monitored for thermal and electrical performance. Requirements for certifications and code compliance will be fulfilled. A plan for high volume manufacturing will be completed.
Research Justification and Goals	Supports California's goal to establish a comprehensive solar program that includes new and existing homes and businesses per the Integrated Energy Policy Report 2004 Update; and adds a project to the Commissions research portfolio that emphasizes innovative energy supply and end use technologies, focusing on their reliability, affordability, and environmental attributes as mandated by the Warren-Alquist Act by: • Developing a market-ready product that improves upon existing residential PV roofing products in terms of cost, ease and speed of installation, and electrical and thermal performance. • Adding insulation value of R-50 to the rooftop (both PV and non-PV tiles, which go around the PV array and on the roof's North slope.
Contractor	Sacramento Municipal Utility District
Site Location	Sacramento, CA
PIER Manager	Hassan Mohammed M.E.

This project is being conducted by the California Energy Commission's Public Interest Energy Research (PIER) program. PIER supports energy research and development that improves the quality of life in California by bringing environmentally safe, affordable, and reliable energy services and products to the marketplace.

SMUD - 3.4 Flat Roof Mounting Approaches

The Problem	Currently, there are only a limited number of approaches for mounting PV systems on flat roofs from which customers and installers can choose. Flat roofs represent a sizable number of potential solar array locations, but better products and approaches are required to tap into this opportunity.
Proposed Research	Schott Applied Power Corp. (SAPC) will develop a mounting approach for flat roof PV systems installations. SAPC will meet with SMUD to determine necessary design constraints. SAPC will then develop and prototype several designs. A manufacturing review will be completed after the prototypes have been fabricated. A demonstration array will be constructed to illustrate the completed design.
Research Justification and Goals	Supports California's goal to establish a comprehensive solar program that includes new and existing homes and businesses per the Integrated Energy Policy Report 2004 Update; and adds a project to the Commissions research portfolio that emphasizes innovative energy supply and end use technologies, focusing on their reliability, affordability, and environmental attributes as mandated by the Warren-Alquist Act by: • Reviewing the customer requirements for mounting approaches on buildings with flat roofs. • Developing and prototyping designs that meet those approaches. • Developing a mounting approach that will allow modules to be easily mounted on a flat rooftop.
Contractor	Sacramento Municipal Utility District
Site Location	Sacramento, CA
PIER Manager	Hassan Mohammed M.E.

This project is being conducted by the California Energy Commission's Public Interest Energy Research (PIER) program. PIER supports energy research and development that improves the quality of life in California by bringing environmentally safe, affordable, and reliable energy services and products to the marketplace.

SMUD - 3.5 Optimization of Residential PV Systems

The Problem	The current status of grid-connected PV technology is that it is not quite ready for prime time. Systems are complicated, component-intensive, expensive, difficult to install, and inefficient. The residential new construction market lacks a PV system with good aesthetics and reasonable cost.
Proposed Research	Astro Power will research and develop an integrated residential PV system designed and optimized for the California market. The new design configuration will be comprised of a PV module/laminate product, associated mounting and wiring system, a Power Conditioning Unit (PCU) for grid-connected PV systems and a low-cost PV system meter. Astro Power will then integrate all the components into a line of packaged residential PV systems and will finally demonstrate them.
Research Justification and Goals	Supports California's goal to establish a comprehensive solar program that includes new and existing homes and businesses per the Integrated Energy Policy Report 2004 Update; and adds a project to the Commissions research portfolio that emphasizes innovative energy supply and end use technologies, focusing on their reliability, affordability, and environmental attributes as mandated by the Warren-Alquist Act by: • Producing an affordable, high-performance, grid-tied residential building integrated PV system that is aesthetically appealing and easily installed. • Developing and producing a low-cost readout device for homeowners. • Developing a new inverter to be used with the building integrated PV system.
Contractor	Sacramento Municipal Utility District
Site Location	Sacramento, CA
PIER Manager	Hassan Mohammed M.E.

This project is being conducted by the California Energy Commission's Public Interest Energy Research (PIER) program. PIER supports energy research and development that improves the quality of life in California by bringing environmentally safe, affordable, and reliable energy services and products to the marketplace.

SMUD - 3.6 Remote Dispatch & PV Irrigation

The Problem	A tremendous amount of acreage in California is irrigated using water pumped from wells. Many of these wells are in remote locations. Agricultural irrigation pumping is a large source of utility summer peak loads in many areas of California. Very little irrigation is performed for the other half of the year. Due to the distributed nature of agriculture, irrigation loads are not profitable loads for utilities. This may be a good market for photovoltaics. There are few PV-powered irrigation systems in the Central Valley and probably none that are grid connected.
Proposed Research	Two PV irrigation systems will be designed: one grid-connected and one stand-alone. Both designs will be implemented in demonstration projects. The demonstration projects will be monitored and evaluated. These demonstrations will then be used to test the PV-based spot market for electricity sales. Many agricultural wells in Sacramento County are large enough to require sufficiently high power producing PV systems to make them good spot-market generators.
Research Justification and Goals	Supports California's goal to address peak demand challenges by linking photovoltaic (PV) installations with price responsive tariffs and advanced metering per the Integrated Energy Policy Report 2004 Update; and to identify opportunities and support programs to reduce electricity demand related to the water supply system during peak hours and opportunities to reduce the energy needed to operate water conveyance and treatment systems per the Energy Action Plan 2005 by: • Developing PV-powered irrigation systems designs and demonstration projects: one grid connected and one grid-independent. • Creating the basis for a PV agricultural irrigation program in the Sacramento area. • Testing the market for remote dispatch of PV systems in agricultural applications.
Contractor	Sacramento Municipal Utility District
Site Location	Sacramento, CA
PIER Manager	Hassan Mohammed M.E.

This project is being conducted by the California Energy Commission's Public Interest Energy Research (PIER) program. PIER supports energy research and development that improves the quality of life in California by bringing environmentally safe, affordable, and reliable energy services and products to the marketplace.

SMUD - 3.7 PV and Evaporative Cooling

The Problem	The main source of demand for electricity in the typical home on a hot summer afternoon is the air-conditioning unit. Air conditioning with air-cooled condensing is the direct cause of California's summer peak load problem. A combination of two-stage evaporative cooling, PV, and a good building shell should provide the homeowner with good comfort and reduce electricity usage of up to 75%. A demonstration of this configuration is needed before adoption of this solution can become marketable.
Proposed Research	A PV system will be tested for use with California manufactured two-stage evaporative cooling units in residential demonstration projects. Two types of demonstration projects will be implemented: (1) PV delivering 115 volts of AC power to a home with a two-stage unit; and (2) PV delivering 48 volts of DC power directly to a unit modified to accept DC power and delivering 115 volt AC power to the home or grid when there is no demand for cooling. The installations will be monitored and the results presented in a final report.
Research Justification and Goals	Adds a project to the Commissions research portfolio that emphasizes innovative energy supply and end use technologies, focusing on their reliability, affordability, and environmental attributes as mandated by the Warren-Alquist Act; and has the potential to enhance the reliability, peaking power, and storage capabilities of renewable energy as mandated by the Warren-Alquist Act by: • Laying the groundwork for creating a new market for PV and beginning to address air conditioning as a peak-load driver. • Building a DC-operated indirect/direct evaporative cooling unit.
Contractor	Sacramento Municipal Utility District
Site Location	Sacramento, CA
PIER Manager	Hassan Mohammed M.E.

This project is being conducted by the California Energy Commission's Public Interest Energy Research (PIER) program. PIER supports energy research and development that improves the quality of life in California by bringing environmentally safe, affordable, and reliable energy services and products to the marketplace.

SMUD - 3.8 Solar Dish Concentrating with Stirling Engine

The Problem	Solar-dish Stirling-engine systems concentrate sunlight onto heat powered Stirling engines which then generate electricity. These sun driven electric generators have been under development for the past 10 years by Science Application International Corporation (SAIC) as a Contractor to the National Renewable Energy Laboratory (NREL) and Sandia National Laboratories. The barriers to marketability are currently (2001) achieving reliability and cost reductions.
Proposed Research	Science Application International Corporation (SAIC) will continue developing two photovoltaic (PV) solar concentrating systems: 1) a 25 kW hybrid solar-dish powering an advanced STM Power Stirling engine, and 2) a 20 kW solar concentrating dish (PV) system using a high concentration silicon PV receiver powering a 25 kW Kokums 4-95 Stirling engine. This work expands upon previous SAIC dish-PV programs. A demonstration of the most reliable and cost effective of the two systems will be installed in SMUD's service territory.
Research Justification and Goals	Adds a project to the Commissions research portfolio that emphasizes innovative energy supply and end use technologies, focusing on their reliability, affordability, and environmental attributes as mandated by the Warren-Alquist Act; and has the potential to enhance the reliability, peaking power, and storage capabilities of renewable energy as mandated by the Warren-Alquist Act by: • Testing a 25 kW hybrid solar-dish powering an advanced STM Power Stirling engine. • Testing a 20 kW solar concentrating dish (PV) system using a high concentration silicon PV receiver to power a 25 kW Kokums 4-95 Stirling engine. • Achieving 25% and 18% solar conversion efficiencies for the respective systems with 90% availability • Selecting the system with the most potential for performance and low cost for installation as a demonstration system in Sacramento.
Contractor	Sacramento Municipal Utility District
Site Location	Sacramento, CA
PIER Manager	Hassan Mohammed M.E.

This project is being conducted by the California Energy Commission's Public Interest Energy Research (PIER) program. PIER supports energy research and development that improves the quality of life in California by bringing environmentally safe, affordable, and reliable energy services and products to the marketplace.

SMUD - 4.1 Non-vacuum, Thin-Film CIGS PV Modules

The Problem	The PV industry is currently dominated by solar cells fabricated from expensive semiconductor wafers of high purity silicon. A strategy for lowering cost of PV is to replace semiconductor wafers with thin-film technologies which produce thin coatings of PV materials deposited on inexpensive substrates like window glass or stainless steel. In order for the cost savings of this technology to be realized an alternative to the complex and capital intensive vacuum techniques typically used to deposit these films to make multi-cell modules must be developed and demonstrated.
Proposed Research	The purpose of this project is to develop the equipment and processing parameters necessary to fabricate multi-cell modules using particles-based non-vacuum processes and to demonstrate that simple non-vacuum material processing strategies can yield large and efficient thin-film PV modules. The basic fabrication process involves preparing fine powders of precursors materials, depositing these powders in thin layers using simple non-vacuum techniques, and then converting the layers into high-quality PV films by reactive sintering (heating powdered particles until they stick (not melt) together forming a film). This process promises to minimize capital equipment costs, reduce PV module manufacturing costs, and increase return on PV investments.
Research Justification and Goals	Adds a project to the Commissions research portfolio that demonstrates a balance between short-term, mid-term, and long-term potential as mandated by the Warren-Alquist Act; and addresses key technical and scientific barriers as mandated by the Warren-Alquist Act by: • Developing the equipment and processing parameters necessary to fabricate multi-cell modules using particles-based non-vacuum processes. • Demonstrating that low-cost non-vacuum processing can yield large and efficient PV modules.
Contractor	Sacramento Municipal Utility District
Site Location	,
PIER Manager	Hassan Mohammed M.E.

This project is being conducted by the California Energy Commission's Public Interest Energy Research (PIER) program. PIER supports energy research and development that improves the quality of life in California by bringing environmentally safe, affordable, and reliable energy services and products to the marketplace.

SMUD - 4.2 Maximum Power Point Tracker & Operational Dispatch

The Problem	Existing PV system designs are either a grid tied inverters with maximum power point tracking (MPPT) or back up power inverters that provide energy storage and outage protection but lack maximum power point tracking functions. The majority of California customers desire to achieve both MPPT and energy storage functions but this requires multiple inverters at the expense of increased system complexity and higher overall system cost.
Proposed Research	Develop and field test a PV inverter incorporating both maximum power point tracking and dispatchable energy storage functions. The inverter to be developed under this project will incorporate all of the controls for the PV array and battery system into the same device. The inverter will function as a dedicated PV grid-tied inverter when the utility is present and the inverter will remain idle until PV power is available from the sun. The inverter only connects to the battery when the battery requires recharging, or during a power outage, requiring the inverter to pick up critical loads.
Research Justification and Goals	Supports California's goal to address peak demand challenges by linking photovoltaic (PV) installations with price responsive tariffs and advanced metering per the Integrated Energy Policy Report 2004 Update by: • Developing a low-cost grid feeding inverter incorporating both maximum power point tracking functions and backup power capabilities. • Providing greater choices for California consumers by developing a remote dispatchable capability for renewable power systems.
Contractor	Sacramento Municipal Utility District
Site Location	Sacramento, CA
PIER Manager	Hassan Mohammed M.E.

This project is being conducted by the California Energy Commission's Public Interest Energy Research (PIER) program. PIER supports energy research and development that improves the quality of life in California by bringing environmentally safe, affordable, and reliable energy services and products to the marketplace.

SMUD - 4.3 Demonstration of a Full-Spectrum Lighting System

The Problem	Much of the energy resident in sunlight goes unused when used for a single purpose such as lighting, and its use often cannot be justified on a cost and performance basis when compared to electric lighting. Previous attempts to use sunlight directly for interior lighting via Fresnel lens collectors, reflective light-pipes, and fiber-optic bundles have been plagued by significant losses in the collection and distribution system including ineffective use of nonvisible solar radiation, and a lack of integration with parallel electric lighting systems required to supplement solar lighting on cloudy days and at night.
Proposed Research	The purpose of this project is to demonstrate the feasibility of a new, pre-commercial hybrid solar lighting technology that uses sun-tracking collectors to concentrate direct, non-diffused sunlight and route it into buildings using flexible optical fibers to new "hybrid" light fixtures. The natural and parallel electric light sources will work in unison to light commercial buildings where lighting represents the single largest consumer of electricity.
Research Justification and Goals	Adds a project to the Commissions research portfolio that emphasizes innovative energy supply and end use technologies, focusing on their reliability, affordability, and environmental attributes as mandated by the Warren-Alquist Act by: • Demonstrate the technical feasibility and energy-savings potential of hybrid solar lighting (HSL) technology in a commercial building setting - Gain the needed experience and knowledge by installing HSL hardware in a non-laboratory, commercial building setting. - Raise the level of awareness of various stakeholders about this new technology including architects, lighting designers, and green energy advocates. - Demonstrate the versatility and advantages of hybrid solar lighting in comparison to skylights and other solar-electric options.
Contractor	Sacramento Municipal Utility District
Site Location	Sacramento, CA
PIER Manager	Hassan Mohammed M.E.

This project is being conducted by the California Energy Commission's Public Interest Energy Research (PIER) program. PIER supports energy research and development that improves the quality of life in California by bringing environmentally safe, affordable, and reliable energy services and products to the marketplace.

SMUD - 4.4 Slat-Array Concentrator Development

The Problem	Concentrating photovoltaic (CPV) is an emerging technology which appears to be the least expensive and most efficient of all photovoltaic technologies due to substituting a large fraction of expensive flat-plate PV panels with less expensive concentrators supplied by tracking systems. To fully exploit the advantages of CPVs and achieve relatively high concentration ratios, a number of approaches based on Fresnel lenses and parabolic mirrors have been devised. However, none of the existing solar concentrators provides desired operation at a reasonable cost, thus limiting the acceptance of CPV technology.
Proposed Research	The purpose of this project is to develop and test a slat-array concentrating photovoltaic (CPV) prototype module with increased efficiency and reduced cost. This project naturally combines the robustness and high efficiency of reflective optics and the design conveniences of the Fresnel lens technology in a single and inexpensive CPV device based on a novel slat-type concentrator concept. The slat-array module developed in this project will consist of a specially designed asymmetric linear concentrator and an array of concentrator silicon solar cells electrically interconnected and mounted on a single wafer with narrow reflective slats designed to provide light focusing capability.
Research Justification and Goals	Adds a project to the Commissions research portfolio that demonstrates a balance between short-term, mid-term, and long-term potential as mandated by the Warren-Alquist Act; and emphasizes innovative energy supply and end use technologies, focusing on their reliability, affordability, and environmental attributes as mandated by the Warren-Alquist Act by: • Developing and testing a slat-array concentrating photovoltaic (CPV) prototype module with increased efficiency and reduced cost and operation. • Improving the practicability of reflective optics by introducing the lens-like slat-array concentrator concept and developing it for concentrated uniform illumination of photovoltaic cells in moderate sunlight.
Contractor	Sacramento Municipal Utility District
Site Location	Sacramento, CA
PIER Manager	Hassan Mohammed M.E.

This project is being conducted by the California Energy Commission's Public Interest Energy Research (PIER) program. PIER supports energy research and development that improves the quality of life in California by bringing environmentally safe, affordable, and reliable energy services and products to the marketplace.

SMUD - 4.5 Distributed Generation Geartrain for Megawatt Turbines

The Problem	As wind turbines continue increasing in capacity and rotor diameter, gearbox torque loads and component costs increase accordingly negatively impacting the cost of this renewable resource.
Proposed Research	The focus of the project is to design, construct, and test a commercial-scale (1.5MW) distributed generation drivetrain wind turbine along with an integrated controller to address increasing torque loads on large utility-scale turbine drive trains and at the same time include improvements that decrease system weight and costs. Tremendous load reductions on individual gear teeth will be obtained by splitting the torque along multiple paths at the low speed end of the gearbox between small, parallel gearboxes and multiple off the shelf generators. Improvements will reduce gear teeth wear, gearbox cost and weight, installation requirements, and warranty risks.
Research Justification and Goals	Supports California's goal to repower wind turbines to harness wind resources more efficiently per the Integrated Energy Policy Report 2004 Update; and to meet the accelerated 20 percent eligible renewable goal by 2010 and a longer-term goal of 33 percent by 2020 per the Integrated Energy Policy Report 2004 Update by: • Developing a lower-cost wind turbine. • Achieving weight savings and torque reductions over current monolithic generator systems. • Making wind-generated electricity more cost effective. • Working with an established wind power development team to develop a technology intended to enter the market within a few years.
Contractor	Sacramento Municipal Utility District
Site Location	,
PIER Manager	Hassan Mohammed M.E.

This project is being conducted by the California Energy Commission's Public Interest Energy Research (PIER) program. PIER supports energy research and development that improves the quality of life in California by bringing environmentally safe, affordable, and reliable energy services and products to the marketplace.

Strategic Value Analysis: GIS Development #2

The Problem	A combination of power flow models and geographical information system (GIS) tools need to be used to identify the ability of renewable generation systems to address electricity system problems and identify the optimal locations for using renewable generation systems in California.
Proposed Research	The objective of this contract is to investigate the extent to which distributed renewable energy generation can help address current and prevent future problems with California's electricity system while simultaneously providing other significant public benefits. This research effort will focus primarily on using GIS tools to investigate the optimal locations for developing renewable distributed generation systems based on renewable energy resources, detailed demographic, environmental, energy use information, and results from the power flow analyses.
Research Justification and Goals	This project addresses the State of California's renewable energy goals as adopted in the Integrated Energy Policy Report 2004 Update and in the 2005 Energy Action Plan by: • Identifying where renewable DG systems can be located to help alleviate transmission and distribution capacity and congestion problems in the state.
Contractor	California Department of Forestry
PIER Manager	Valentino Tiangco Ph.D.

This project is being conducted by the California Energy Commission's Public Interest Energy Research (PIER) program. PIER supports energy research and development that improves the quality of life in California by bringing environmentally safe, affordable, and reliable energy services and products to the marketplace.

The Flex-Microturbine Uniquely Adapted to Low Pressure Biomass Gas

The Problem	To date, gaseous waste fuels have been difficult to use for electricity generation due to their relatively low energy content and high air-pollution emissions.
Proposed Research	The purpose of this project is to design, develop and demonstrate a Flex-Microturbine™ capable of generating clean electricity while being powered by a variety of gaseous waste fuels. This microturbine will run on different biomass fuels: biogas generated from anaerobic digestion of livestock manure, producer gas generated from thermal gasification of orchard and forest residues, and biogas from landfill gas recovery systems.
Research Justification and Goals	Supports California's goal to meet the needs for new generation first with renewable energy resources and distributed generation per the Energy Action Plan 2003; and to make progress in meeting the State's environmental goals and standards, including minimizing the energy sector's impact on climate change per the Energy Action Plan 2003 by: • Generating clean electricity from waste fuels. • Mitigating air quality impacts and reducing environmental risks, including nitrous oxides (NOx) emissions below 9 parts per million (ppm) (at 15% oxygen). • Developing a new distributed generation technology.
Contractor	FlexEnergy, Inc.
Site Location	Project work is being conducted at various locations throughout California.
PIER Manager	Prab Sethi

This project is being conducted by the California Energy Commission's Public Interest Energy Research (PIER) program. PIER supports energy research and development that improves the quality of life in California by bringing environmentally safe, affordable, and reliable energy services and products to the marketplace.

Tracking the Sun for High Value Grid Electricity

The Problem	Single-axis trackers have been used productively in PV systems since the early 1980's. The obvious advantage of one-axis tracking is that 15% to 35% more energy is produced (increase determined by the specific site meteorology) compared to a stationary array using the same number of solar panels. Despite this advantage, single-axis trackers enjoyed relatively little market development because the best available commercialized technology is expensive and unreliable. Maintenance and installation costs are high due to low reliability of the antiquated controller technology and the non-standardized elements in the structural and electrical design.
Proposed Research	The purpose of this project is to improve reliability, reduce capital costs, installation and maintenance time of an existing tracker system which consists of high-strength steel torque tubes, support posts, an industrial drive system, controller bearings and fasteners. The parts count has been kept low to minimize inventory and procurement costs. Although the basic components are simple, many sites require custom engineering and design elements which add extra costs and delivery time.
Research Justification and Goals	Supports California's goal to meet the accelerated 20 percent eligible renewable goal by 2010 and a longer-term goal of 33 percent by 2020 per the Integrated Energy Policy Report 2004 Update; and adds a project to the Commissions research portfolio that has the potential to enhance the reliability, peaking power, and storage capabilities of renewable energy as mandated by the Warren-Alquist Act by: • Improving on existing PV tracking technology. • Improving available solar technologies and making them more cost effective.
Contractor	Powerlight Corporation
Site Location	Berkeley, CA
PIER Manager	Hassan Mohammed M.E.

This project is being conducted by the California Energy Commission's Public Interest Energy Research (PIER) program. PIER supports energy research and development that improves the quality of life in California by bringing environmentally safe, affordable, and reliable energy services and products to the marketplace.

Valley Fig Growers Anaerobic Digester

The Problem	Although California is the largest agricultural state in the nation, its food processing industry has a limited number of successful anaerobic digesters for converting food waste and waste water from food processing into biogas for electricity production and an environmentally friendly solid that could be used as fertilizer. The gas and environmentally friendly solid are produced from food waste and food processing waste water by microorganisms in the anaerobic digester. Due to the lack of successful digesters, the industry is currently paying a high cost for solid food waste transport to landfills and for wastewater discharge.
Proposed Research	The purpose of the project is to design and construct an anaerobic digester at Valley Fig Growers (VFG) to pre-treat wastewater prior to disposal in the municipal sewer system and create an economically feasible solution to energy and waste water issues facing food processors. The Valley Fig Growers project will be a showcase project that will demonstrate to other food processors the quantifiable economic and environmental benefits gained by installing and operating a digester.
Research Justification and Goals	Supports California's goal to meet the needs for new generation first with renewable energy resources and distributed generation per the Energy Action Plan 2003; and to support the most cost-effective and environmentally sound strategies, including consideration of global climate change per the Energy Action Plan 2003 by: • Converting organic waste and wastewater into biogas that will be used to fuel a micro turbine or boiler to produce electricity and heat. • Reducing the concentration of the wastewater sent to the municipal sewer system and reducing the cost of wastewater disposal for Valley Fig Growers.
Contractor	Valley Fig Growers
Site Location	Fresno, CA
PIER Manager	Zhiqin (Jessica) Zhang

This project is being conducted by the California Energy Commission's Public Interest Energy Research (PIER) program. PIER supports energy research and development that improves the quality of life in California by bringing environmentally safe, affordable, and reliable energy services and products to the marketplace.

Wind Energy Resource Modeling and Measurement

The Problem	In a previous project for the California Energy Commission, AWS Truewind used its advanced MesoMap modeling to estimate and map in detail the State's wind energy resources. The maps were validated and adjusted using wind measurements from 266 locations throughout the State. The validated maps are estimated to have a standard error of 6-8 percent for mean wind speed at 50 meters. This translates to 20-25 percent uncertainty in wind power density. Sources of error were identified as: 1) lack of tall tower validation data, 2) insufficient model resolution for certain topographies, and 3) incomplete understanding of atmospheric boundary layer issues.
Proposed Research	The purpose of this project is to improve understanding of California's wind resources by reducing the error in mean wind speed predicted by California's statewide wind maps and corresponding datasets. Three approaches to reduce the mean wind speed error up to 50 percent include: 1) higher resolution model runs in selected areas, 2) tall tower and sodar measurement of wind speeds aloft at select sites, and 3) basic research into the physics and effects of atmospheric boundary layers.
Research Justification and Goals	Supports California's goal to meet the accelerated 20 percent eligible renewable goal by 2010 and a longer-term goal of 33 percent by 2020 per the Integrated Energy Policy Report 2004 Update by: • Improving accuracy of wind resource estimates in promising areas of California. • Providing better understanding of wind resources and helping to increase market penetration levels though coupling numerical modeling capabilities with meteorological tower monitoring.
Contractor	AWS Truewind, LLC
Site Location	Albany, NY
PIER Manager	Mike Kane

This project is being conducted by the California Energy Commission's Public Interest Energy Research (PIER) program. PIER supports energy research and development that improves the quality of life in California by bringing environmentally safe, affordable, and reliable energy services and products to the marketplace.

Wind Forecasting

The Problem	The intermittent and non-load conforming characteristics of wind energy make it a problematic resource to schedule and integrate into the electric power system. Financially this limits wind energy providers' ability to compete in energy markets. A previous study demonstrated that a timely and accurate wind forecasting system could assist the system operator and energy providers in overcoming these difficulties. With the Energy Action Plan calling for twenty-percent renewables in California's generation mix by the year 2010, these problems will be exacerbated by increasing penetration of intermittent resources on the grid unless mitigation actions are taken.
Proposed Research	The goal of this project is to develop, refine, and demonstrate short-term (one to three hours ahead) and long-term (one to 48 hours ahead) wind forecasting models capable of serving the needs of both the system operator and wind energy generators in five key California wind resource areas. Forecasting error reduction targets for these models include a 10 percent reduction relative to the prior study, and a bias reduced to less than 0.3 percent. Success will lead to enhanced capability for the grid to handle significantly higher penetration levels of intermittent wind power.
Research Justification and Goals	Supports California's goal to meet the accelerated 20 percent eligible renewable goal by 2010 and a longer-term goal of 33 percent by 2020 per the Integrated Energy Policy Report 2004 Update by: • Allowing use of renewable resources to supply the grid in a cost-effective manner. • Allowing increased use of renewable wind energy resources up to 20% of all power generated. • Providing diverse generation resources for consumers.
Contractor	Electric Power Research Institute (EPRI)
PIER Manager	Mike Kane

This project is being conducted by the California Energy Commission's Public Interest Energy Research (PIER) program. PIER supports energy research and development that improves the quality of life in California by bringing environmentally safe, affordable, and reliable energy services and products to the marketplace.

REN Projects Completed in 2005

Co-Production of Silica from Geothermal Fluids

The Problem	Geothermal energy is one of California's important renewable resources. Its power contribution to Californians will be increased by investing in research and technology that 1) reduces the silica scaling that builds up on equipment during power production thereby reducing the efficiency of geothermal power plants, 2) turns the silica waste into a marketable product that can offset the expense of this new technology, and 3) provide a potential source of recycled evaporative cooling water.
Proposed Research	The purpose of this project is to develop a commercial technology to efficiently extract silica from geothermal fluids. The resulting mineral by-product will be sold thus positively impacting the geothermal power industry. Additional benefits include providing a potential source of recycled evaporative cooling water that could result in increased megawatt generation and the reduction of operating and maintenance costs.
Research Results	Lawrence Livermore National Laboratory's preliminary economic analysis resulted in a market value of silica that could potentially be produced from the Mammoth Lakes at about $10,000,000/year based on a silica recovery of 14,400,000 pound per year and a typical market price of $0.70/lbs for precipitated silica used in rubber manufacture. The cost for the extraction technology that removes silica from the entire fluid stream is estimated at $40,000,000 with operating costs of about $4,000,000 per year. These preliminary estimates suggest a rate of return of about 16% and payout in 7 years.
Research Justification and Goals	Supports California's goal to meet the accelerated 20 percent eligible renewable goal by 2010 and a longer-term goal of 33 percent by 2020 per the Integrated Energy Policy Report 2004 Update by: • Generating additional energy and the reduction of operating and maintenance costs at power plants through the reduction in silica scaling. • Market the mineral by-product from geothermal fluids.
Publications	"Mining Geothermal Resources," published on the Science and Technical Review website of the Lawrence Livermore National Laboratory. ==>http://www.llnl.gov/str/JanFeb05/Bourcier.htm
Contractor	Lawrence Livermore National Laboratory
Site Location	Livermore, CA
PIER Manager	Pablo Gutierrez M.E.

This project is being conducted by the California Energy Commission's Public Interest Energy Research (PIER) program. PIER supports energy research and development that improves the quality of life in California by bringing environmentally safe, affordable, and reliable energy services and products to the marketplace.

Powerwheel Demonstration

The Problem	Low-head waterfall power is potentially a higher quality and more reliable energy source than either solar or wind power. Development of the technologies to generate electricity from this resource might also produce power at a lower cost than larger hydroelectric facilities.
Proposed Research	The purpose of this project is to prove the technical, economic, and environmental suitability of the Powerwheel technology for converting energy from low-head waterfalls into cost-competitive electricity. A 75 kilowatt (kW) Powerwheel is to be demonstrated in an irrigation canal. The electricity generated by it is to be distributed to nearby agricultural, industrial, commercial, and residential customers through an interconnection with the electricity grid.
Research Results	Project was unable to demonstrate the full-scale technical, economic and environmental suitability of the Powerwheel due to mechanical difficulties during the demonstration phase. Mechanical problems were apparently related to the particular design employed and test site selected rather than to the overall project concept.
Research Justification and Goals	Adds a project to the Commissions research portfolio that emphasizes innovative energy supply and end use technologies, focusing on their reliability, affordability, and environmental attributes as mandated by the Warren-Alquist Act; and has the potential to enhance the reliability, peaking power, and storage capabilities of renewable energy as mandated by the Warren-Alquist Act by: • Improving the reliability/quality of California's electricity as it is expected that electricity from this source will be more reliable than wind and solar energy. • Providing electricity at a lower cost than conventional hydroelectricity costs. • Displacing electricity generated by combustion processes resulting in the reduction of exhaust gases of about 250 tons/kW/year of Powerwheel installations.
Publications	Fed by PIMS
Contractor	Powerwheel Associates
Site Location	Woodside, CA
PIER Manager	Mike Kane

This project is being conducted by the California Energy Commission's Public Interest Energy Research (PIER) program. PIER supports energy research and development that improves the quality of life in California by bringing environmentally safe, affordable, and reliable energy services and products to the marketplace.

Strategic Value Analysis: Power Flow Simulations and Development of Renewable RD&D Performance Goals

The Problem	California's electricity system needs to identify possible capacity, congestion and reliability problems that could potentially be addressed using renewable energy resources. This involves assessing the types and magnitudes of problems that may be encountered in the State's electricity system in the future. Another part of that effort involves assessing the amounts, locations and characteristics of renewable resources that could possibly be used to help resolve the identified electricity system problems.
Proposed Research	The purpose of this contract is to simulate the condition of California's electricity system in the future to identify possible capacity, congestion or reliability problems that could potentially be addressed using renewable energy resources. This work will identify and characterize generation, transmission and distribution (T&D) problems confronting California's electricity system through 2010 and 2017 using geographical information systems and power flow models calibrated to California's electricity system.
Research Results	Identified and characterized generation, transmission and distribution (T&D) problems confronting California's electricity system through 2010 and 2017 using geographical information systems (GIS) and power flow models calibrated to California's electricity system. Identified locations within California's electricity system where sufficient renewable generation supplies exist to effectively address electricity system "hot spots" as identified in the power flow models and the GIS results. Identified locations and the magnitude of the potential electricity system problems, the amounts and power generation characteristics of renewable energy sources that could possibly help address the problems, and the impacts of injecting renewable electricity generation into the problem areas.
Research Justification and Goals	Supports California's goal to require all retail suppliers of electricity meet the Renewables Portfolio Standard goal of 20 percent of retail electricity sales and accelerate the target date for reaching the Renewables Portfolio Standard goal from 2017 to 2010 per the Integrated Energy Policy Report 2003 and Integrated Energy Policy Report 2004 Update by: • Identifying the locations and characteristics that best enable renewable electricity systems to help alleviate electricity capacity, reliability and congestion problems in the State.
Publications	Strategic Value Analysis for Integrating Renewable Technologies in Meeting Target Renewable Penetration ==>http://www.energy.ca.gov
Contractor	McNeil Technologies
PIER Manager	Prab Sethi

This project is being conducted by the California Energy Commission's Public Interest Energy Research (PIER) program. PIER supports energy research and development that improves the quality of life in California by bringing environmentally safe, affordable, and reliable energy services and products to the marketplace.

REN Projects Completed in 2004

California Wind Energy Consortium

Contract #: 500-00-029
Contractor: University of California, Davis
Subcontractors: Dynamic Design
Contract Amount: $537,882
Contractor Project Manager: C. Van Dam (530) 752-7741
Commission Contract Manager: Dora Yen (916) 653-4128
Status: Completed

Project Description:
Based on input from California's wind energy industry, the PIER program determined a need to establish a forum in which issues critical to further wind energy development in the State could be addressed and coordinated among the key stakeholders. The purpose of this project is to establish a wind energy collaborative that brings together key stakeholders with a specific focus on further beneficial development of California's wind energy resources. As such, the Collaborative will represent the first statewide and California-focused effort at tying together activities on wind energy research and development, commercialization, critical path analysis and education to help resolve key technical, environmental, economic or institutional barriers.

Collaborative members include representatives from the wind energy industry, Energy Commission staff involved in wind energy development, U.S. Department of Energy (DOE)/National Renewable Energy Laboratory (NREL) staff, members of the environmental community and representatives from the academic and research communities conducting wind energy research. A primary goal of this project is to establish and plan the self-sustaining efforts of the California Wind Energy Collaborative. Ultimately, the collaborative will provide expertise to the Commission to help supplement and enhance wind energy planning and development programs specific to California.

Additional goals include:

- Support the existing wind industry by maintaining an electronic wind performance database.
- Develop a wind energy technician training plan.
- Prepare investigative white papers reporting on current industry issues and research scenarios.
- Assist in the development of a State wind anemometer loan program plan.

This project supports the PIER Program objectives of:

- Improving electricity reliability/quality/sufficiency of California's electricity by:
  - Ensuring California maintains a competent and current wind energy support base.
  - Providing immediate expertise to PIER planning activities in areas pertaining to wind energy technology from design, operation/maintenance, electrical generation and management.
  - Providing immediate expertise to evaluate and assess industry requests.
- Strengthening the California economy by:
  - Supporting research and development by gathering and disseminating data pertinent for the further development of wind technologies.
  - Creating new jobs/position and training new technicians and engineers to support the wind industry.
- Providing greater choices for California energy consumers by providing current and reliable facts on the wind industry, dispelling myths about wind energy, and providing better understanding of the wind industry's capabilities by combining energy resources through case studies and optimization scenarios.

Proposed Outcomes:

1. Establishment of the California Wind Energy Collaborative as a forum for a coordinated approach to deal with wind related technologies beneficial to California's unique needs.
2. Help plan guidelines for a statewide wind-engineering technician training program to ensure California maintains a competent support base.
3. Investigative white papers that offer plausible approaches to optimizing wind plant facilities including RPS integration issues, storage technologies, wind trend analysis and turbine performance and power trends.
4. Assistance in planning for a State wind anemometer loan program and personnel to support the effort.
5. Continue enhancing the electronic reporting efforts of the Wind Project Performance Reporting System (WPRS).
6. Support consumer education efforts.

Project Status:

The California Wind Energy Collaborative established an office on the UC Davis campus in the first quarter of 2002, and is currently serving as a focal center for wind energy related developments in the State. During its first year, the Collaborative established and held semi-annual meetings of an advisory board of wind industry professionals, the wind energy research community and government representatives working on wind energy issues at the state and federal levels. In December of 2002 and 2003, the Collaborative hosted the Wind Industry Forum, which was well received by the attendees. The Collaborative continues to maintain and develop the electronic Wind Performance Reporting System (WPRS). Five scenario-based white papers have been completed: *Wind Speed and Electric Power Trends, Value of Back-up and Energy Storage, Renewable Generation Integration Cost Analysis, Wind Facts and Fiction, Geothermal Integration Issues for RPS*. In response to industry needs, the Collaborative provided initial plans for a technician training program and wind anemometer loan program. Future activities of the Collaborative will be funded under a work authorization under the University of California Office of the President/California Institute for Energy & Environment (UCOP/CIEE) Master Research Agreement. Information regarding the California Wind Energy Collaborative, including the electronic WPRS and Wind Forum proceedings can be found at:

⇒ http://cwec.ucdavis.edu

Clean Power Estimator

Contract #: 500-01-029
Contractor: Clean Power Research
Subcontractors: Clean Power Research
Contract Amount: $43,500
Contractor Project Manager: Tom Hoff (707) 224-9992
Commission Contract Manager: Elaine Sison-Lebrilla (916) 653-0363
Status: Completed

Project Description:
The goal of this project is to assist California consumers evaluate the economic feasibility of cool roofs (primarily roofs with high solar reflection and high thermal emittance), radiant barriers, and building integrated photovoltaics (BIPV) by:

a) Documenting the energy impacts associated with the various products based on existing research results.
b) Constructing an analytical method that quantifies the electricity savings based on these research results.
c) Integrating the analytical capability into the Commission's version of the Clean Power Estimator program.

This project contributes to the PIER program objective of:

- Improving the energy cost/value of California's electricity by enabling consumers to assess the benefits of cool roofs, radiant barriers, and BIPV systems to determine if they want to purchase such technologies to decrease heat gain in their building structures or generate their own electricity.

Proposed Outcome:

1. Extend the capability of the Commission's version of the Clean Power Estimator tool to be able to assess the economic benefits of cool roofs, radiant barriers, and BIPV.

Actual Outcome:

1. Extended the capability of the Commission's version of the Clean Power Estimator tool to be able to assess the economic benefits of cool roofs, radiant barriers, and BIPV.

Project Status:
The Contractor has completed the tasks of documenting the energy impacts associated with the various products based on existing research results and constructing an analytical method that quantifies the electricity savings based on these research results. The last task of integrating these into the web based Clean Power Estimator tool has been completed. The project results are available on the web at:

⇒ http://www.consumerenergycenter.org/renewable/estimator/index.html

Collins Pine Co. BCI Cogeneration Project

Contract #: 500-98-043
Contractor: Collins Pine Company
Subcontractors: BC International Corporation : National Renewable Energy Laboratory (NREL) : Plumas Corporation : Kemestrie : TSS Consultants : ProForma Systems, Inc. : Tembec, Inc. : Raphael Katzen Associates International, Inc. : CIFAR
Contract Amount: $1,148,961
Match Amount: $382,274
Contractor Project Manager: Wade Mosby (503) 417-7755
Commission Contract Manager: Zhiqin (Jessica) Zhang (916) 654-4063
Status: Cancelled

Project Description:
The purpose of this project is to determine the technical and economic feasibility of integrating a new biomass-to-ethanol facility with an existing biomass power plant, located in Chester, California. If feasible, these two facilities would be operated together and become customers for each other's products. The ethanol facility would produce lignin for sale to the biomass boiler, which it would use to generate electricity and steam. In addition, the biomass power plant would generate electricity and steam for sale to the ethanol facility.

This project supports the PIER Program objectives of:

- Improving system reliability and power quality of California's electricity by seeking a cost-effective way to operate a distributed generation power plant in a rural area, which is prone to electricity supply disruptions.
- Maximizing market/economy connection by providing positive impacts to California local economies by the creation of new jobs and new tax revenues in a rural area.

Proposed Outcomes:

1. Determine whether the ethanol facility can produce up to 20 million gallons per year of ethanol from softwood feedstock using BC International (BCI) technologies.
2. Determine whether lignin from the ethanol facility can partially displace the existing fuel of Collins Pine biomass power plant by 30 percent to 60 percent.
3. Identify at least one co-product, other than lignin or ethanol, which can be produced by the ethanol facility.
4. Reduce the cost of electricity production at the Collins Pine biomass power plant by at least 1.5 cents/kilowatt hours (kWh).
5. Identify at least one co-product, other than lignin or ethanol, which can be produced by the ethanol facility and has a value of at least $2/pound.

Project Status:
The contract was terminated on April 14, 2003.

In October of 1998, the Commission signed a contract with Collins Pine Company to fund a research, development, and demonstration project under the Public Interest Energy Research (PIER) program. The total PIER budget for this contract is $1,148,961. The match funding of $375,274 is provided by Department of Energy (DOE)/National Renewable Energy Laboratory (NREL). The project was originally scheduled to be completed by December 2000. The project completion schedule was extended to December 31, 2001.

The Energy Commission issued a stop work order to this contract on September 19, 2001 due to lack of deliverables from subcontractors, in particular BC International (BCI). The Commission sent a stop work order follow-up letter that included a list of lacking deliverables on October 11, 2001. In response to BCI's response to this letter, the Commission sent a letter on December 4, 2001 to address remaining specific issues regarding subtasks/deliverables. The issue of the pilot scale results and the ability to continue testing at

Collins Pine with the generated "simulated" lignin was discussed at length with DOE/NREL and the project team at a December 20, 2001 CPR meeting at the Energy Commission.

Based on a review of the documentation submitted, we believe that BCI has still not adequately responded to the issues that remain:

1) Lack of fundamental data associated with ethanol process validation activity. Examples of the missing fundamental information include material and energy balance data for all process and utility streams, process flow diagrams, sized equipment specification, and cost information.
2) Ability of the electricity generation side of the facility to use the "simulated" lignin from the ethanol generation side as a fuel.

These remaining issues posed a serious question about the continuation of this contract. The Commission Contract Manager agreed and recommended to the Commission's Research and Development Policy Committee that the contract be terminated. The recommendation to terminate the contract was heard and approved by the Policy Committee on March 20, 2003.

Evaporative Cooling of Geothermal Power Plants with Recycled Water

Contract #: PIR-00J-002
Contractor: Mammoth Pacific LP
Contract Amount: $1,000,000
Match Amount: $4,571,678
Contractor Project Manager: Robert Sullivan (760) 934-4893
Commission Contract Manager: Pablo Gutierrez (916) 654-4663
Status: Cancelled

Project Description:
The purpose of this project was to increase power production of the combined geothermal power plants in the Mammoth Pacific Limited Partnership (MPLP) by up to 10 megawatts electric (MWe) during the summer months. This would be done by modifying the existing power plants to utilize evaporative cooling. The MPLP owns and operates three geothermal binary power plants (G1/G2/G3) with a combined on-line power generation of 32 MWe.

Phase 1 testing included the evaluation of three different evaporative cooling technologies and the evaluation of two different sources of water. The three evaporative cooling technologies that were tested are:

1) Swamp cooler technology utilizing a thick eight-inch thick honeycombed material.
2) Wetted pad technology utilizes a two-inch thick honeycombed material.
3) Fogger nozzles and no filter media.

Phase 2 consisted of using geothermal fluid as a source of evaporative cooling during the summer months.

This project supports the PIER Program objectives of:

- Improving the energy cost/value of California's electricity by enhancing power generation and improving geothermal power plant efficiency.
- Improving electricity reliability/quality/sufficiency of California's electrical system by providing up to 10 MWe of power during the summer months.

Proposed Outcomes:

1. For Phase 1, evaluate of three evaporative cooling technologies to determine their effectiveness in increasing power production during the summer months. These technologies will include:
   A. Swamp Pad Cooler.
   B. Spray Bars with Wetted Pads.
   C. Fogger Nozzle.
2. For Phase 2, perform an engineering analysis and the construction, testing of a geothermal fluid conveyance system.

Actual Outcomes:

1. For Phase 1, resulted in an evaluation of three evaporative cooling technologies to determine their effectiveness in increasing power production during the summer months. These technologies included:
   A. Swamp Pad Cooler.
   B. Spray Bars with Wetted Pads.
   C. Fogger Nozzle.
2. For Phase 2, performed an engineering analysis and the construction, testing of a geothermal fluid conveyance system. Financial considerations including the costs of geothermal fluid chemical treatment, operation and maintenance costs, construction, project financing, capital costs, etc. A permanent chemical treatment system was proposed for construction to supply reclaimed geothermal fluid during the summer months for the G1/G2/G3 evaporative cooling system.

Project Status:
This project has been cancelled.

There were several contributing factors regarding suspension of the planned work. The primary factor was that MPLP's facilities are made up of three separate power plants that are similar in design but with significant differences. These differences are important when viewed in relation to the evaporative cooling needs. The project focused on the G1 facility initially because of the relatively small size of the air condensers and the fact that variable frequency drives (VFD's) are available to control air condenser fan horsepower. The G2 and G3 facilities have significantly larger air condensers and do not have VFD's installed. These differences made completing this project much more time consuming and complex than originally contemplated and MPLP asked to be relieved of the responsibility for continuing the project with the G2 and G3 facilities. The Commission agreed with this request and cancelled the remainder of the project. However, there is a successful evaporative cooling system operating on the G1 power plant resulting in up to 2 MWe of increased power production during the hot summer days.

A report was produced November 20, 2001 by the Department of Energy's National Renewable Energy Laboratory: *Report on Measurements of the Evaporative Pre-cooling System at Mammoth Lakes Power Plant* by C. Kutscher and K. Gawlik.

Strategic Value Analysis: GIS Development

Contract #: 500-00-030
Contractor: California Department of Forestry
Contract Amount: $280,000
Contractor Project Manager: Dean Cromwell (916) 445-4302
Commission Contract Manager: Prab Sethi (916) 654-4509
Status: Completed

Project Description:
The PIER Renewables area is investigating the ability of renewable resources to help make California's electricity system more reliable, affordable, diverse and cleaner. Part of that effort involves assessing the types and magnitudes of problems that may be encountered in the State's electricity system in the future. Another part of that effort involves assessing the amounts, locations and characteristics of renewable resources that could possible be used to help resolve the identified electricity system problems. Due to the large amount of data and complex nature of the issues being addressed, the assessments will be conducted using geographical information systems. The purpose of this contract is to build off of an existing geographical information system developed and operated by the California Department of Forestry (CDF) to help conduct the assessments. To accomplish this goal, CDF will do the following:

- Analyze existing spatial information related to energy use and environmental and demographic characteristics of sub-regions within the State.
- Create required data layers on available renewable energy resources.
- Use data on problem areas within California's electricity system developed by another contract (500-00-031, with McNeil Technologies).

As a result, this contract will identify areas where renewable distributed generation (DG) systems can potentially help address electricity reliability, congestion and power quality problems. At the same time, this contract will provide public benefits such as improving air quality, preventing wildfires in high-risk areas, and increasing employment in economically stressed areas of the State.

This project supports the PIER Program objective of:

- Improving the reliability/quality of California's electricity by identifying where renewable distributed generation systems can be located to help alleviate transmission and distribution capacity and congestion problems in the State.

Proposed Outcomes:

1. Collect data sets necessary to create thematic layers on renewable energy resources within California including layers on detailed demographic, environmental, and energy use information, and layers that incorporate the results from the McNeil Technologies (500-00-031) power flow analysis.
2. Construct thematic layers and develop methods for running iterative scenarios that help determine optimal locations for renewable generating systems that provide strategic benefit to California's electricity system as well as public benefits that extend beyond the beneficial impacts to the electricity system.
3. Develop a Windows-based program (or equivalent process) that enables staff in the PIER Renewables program to remotely access the GIS information, run different and new scenarios based on new data, and collect the associated results.
4. Assist in establishing at least two case studies that provide representative and site-specific analyses on the use of renewable distributed generation systems to effectively and affordably address California electricity system problems.
5. Provide a written report and GIS-based maps depicting the key results obtained from the various GIS scenarios, and the two case studies. The key results will include identification of the optimal locations where renewable generation systems can possibly provide strategic benefit to California's electricity system as well as other public benefits.

Actual Outcomes:
Technical and economic resource assessments were provided for the wind, geothermal and solar technologies. Performance characteristics were prepared for various distributed generation technologies.

After passage of the State's Renewable Portfolio Standard (RPS) and the Energy Action Plan goals for renewables, the PIER Renewables group was asked to have the work on this project help identify impacts to the transmission system and the ability to accelerate RPS goals. Consequently, this meant an additional workload. However, the contractor has provided major work products on the needed GIS model and mapping efforts. To meet RPS requirements, this contract has now been superseded by a new contract 500-04-004 with CDF.

Project Status:
This project has been completed. A final report will be published spring 2005.

Utilization of Waste Renewable Fuels in Boiler with Minimization of Pollutant Emissions

Contract #: 500-98-037
Contractor: Energy and Environmental Research Corporation
Subcontractors: Environmental Research Corporation : University of California, Davis : T.R. Miles Consultants : Stanford University
Contract Amount: $981,952
Match Amount: $610,238
Contractor Project Manager: Vladimir Zamansky (949) 859-8851
Commission Contract Manager: Rajesh Kapoor (916) 654-4611
Status: Completed

Project Description:
California has a tremendous amount of biomass resources. The State generates over 70 million bone dry tons of biomass residues every year. However, less than six-million tons per year are used to help meet the State's electricity needs. Among the barriers to increased use of biomass residues for energy purposes are the relatively high cost of biomass generated electricity, and its perception as having higher air emissions than other renewable or natural gas alternatives. The purpose of this project is to develop an innovative gasification technology that can be retrofitted to existing biomass combustion facilities to help lower emissions while also enabling use of lower-cost biomass fuels. The technology, Close-Coupled Gasification (CCG), represents a synergistic combination of direct combustion, biomass/waste gasification, and GE-EER's emission control approaches.

The goal of this project is to develop a preliminary conceptual design for a full-scale demonstration facility of CCG technology. The design would retrofit (couple) CCG technology in a California biomass power plant to reduce the nitrogen oxides (NO_x) emissions by using the gasified low-grade biomass/waste fuel. This project is Phase I of a four-phase CCG technology commercialization plan. If analyses prove that the project would be technically and economically feasible, the project developers may decide to design, retrofit and operate the demonstration facility (Phases II and III) and to commercialize the technology throughout California and elsewhere (Phase IV).

Three California biomass power plants, which are potential partners in the full-scale CCG technology demonstration, will participate in this project's design and economic studies to determine if the technology will provide economic and operational benefits to their units.

This project supports the PIER Program objective of:

- Improving the environmental and public health risks/costs of California's electricity by developing a lower-cost method for existing, biomass power plants to control NO_x and other pollutant emissions.

Proposed Outcomes:

1. Design and develop an economic process (demonstration facility), which is capable of converting biomass/waste into gaseous fuel to be used as supplementary cofiring/reburning fuel and NO_x control in California biomass boilers.
2. Produce 10-30 percent of gaseous fuel (by heat input) for a 25 megawatt (MW) biomass boiler.
3. Reduce NO_x emissions up to 65 percent in basic reburning and 90 percent in advanced reburning (AR) complying with all other California emissions standards.
4. Reduce NO_x control costs by at least 20 percent compared to the costs of existing NO_x control methods used by biomass boilers owned by Wheelabrator Shasta/Hudson Energy Company, Woodland Biomass, and Wadham Energy.

Actual Outcomes:

1. Designed and developed an economic process (demonstration facility), which is capable of converting biomass/waste into gaseous fuel to be used as supplementary cofiring/reburning fuel and NO_x control in California biomass boilers.
2. Produced 10-30 percent of gaseous fuel (by heat input) for a 25 megawatt (MW) biomass boiler.
3. Reduced NO_x emissions up to 65 percent in basic reburning and 90 percent in advanced reburning (AR) complying with all other California emissions standards.
4. Reduced NO_x control costs by at least 20 percent compared to the costs of existing NO_x control methods used by biomass boilers owned by Wheelabrator Shasta/Hudson Energy Company, Woodland Biomass, and Wadham Energy.

Project Status:

- The project and final report have been completed and will be published.
- Achieved all the proposed outcomes of the project.
- The Contractor has proposed to move to Phase II of the project.

Wind Turbine Company EMD Turbines

Contract #: 500-00-019
Contractor: Wind Turbine Co.
Subcontractors: Garrad Hassan Ltd. : Windward Engineering : Hamilton Sunstrand : ATK Thiokol Propulsion : Commercial Casting Company : Navigant Consulting, Inc.
Contract Amount: $1,300,000
Contractor Project Manager: Kenneth Deering (425) 637-1470
Commission Contract Manager: Mike Kane (916) 654-7119
Status: Completed

Project Description:
Under Phase I, funded under a previous contract (500-97-032), a prototype version of the innovative turbine was successfully designed, developed and demonstrated at the National Renewable Energy Laboratory (NREL) test facility in Colorado. The purpose of this project was to transition to Phase II in the development and demonstration of a cost-effective next-generation wind turbine capable of producing electricity at prices that can compete with conventional electricity generation systems, e.g., fossil fuel and natural gas. The objectives were to develop and to test a lower-cost grid-connected 500kW commercially-viable Engineering and Manufacturing Development (EMD) wind turbine scalable to 750kW at a California site. The machine was to be suited for both grid-connected and for standalone applications in combination with other generation and energy storage options. The turbine demonstration was located at the Fairmont wind site in Southern California.

The 250kW prototype proof-of-concept (POC) is a horizontal-axis 2-bladed downwind turbine and has amassed over 1000 hrs in operation in attended and unattended production mode combined. The POC remains a valuable development and test platform for new modifications and turbine studies. Leveraging off the successes and lessons learned from the POC, the flap-motion control mechanism will be further enhanced and demonstrated using the EMD in typical California Class 5 to Class 6 wind conditions (approximately 13-20 mph).

This project supports the PIER Program objectives of:
- Improving the energy cost/value of California's electricity by developing a lower cost wind turbine capable of producing electricity at prices that can compete with conventional electricity generation.
- Improving the environment, public health and safety of California's electrical system by promoting "zero" emissions electricity generation using alternative energy solutions and by reducing air pollution and global warming.

Proposed outcomes:
1. Bring to market readiness a commercially viable and competitive turbine.
2. Provide electrical power to the California grid.
3. Produce a "free" and "clean" fuel generation system to provide reliable and cost competitive energy alternatives to consumers.
4. Advance turbine design and manufacturing with an innovative lightweight and flexible design that reduces structural loads and improves turbine reliability and service life.
5. Put California back into the spotlight as a leader in wind energy resources.

Project Status:
The 500kW EMD has been installed at a site near Lancaster, California. The turbine experienced a tower-blade strike after approximately 70 hours of operation, damaging one of the blades. Both blades were removed and shipped to NREL to determine cause of the incident. Based on the NREL findings, control and protection software has been upgraded to prevent additional strikes. The EMD was refitted with a pair of off-the-shelf blades and resumed operation in March 2003. In May 2003, EMD suffered a failure of the main rotor shaft, rendering the turbine inoperable. For safety reasons the turbine was dismantled. The Commission issued a partial stop work order to allow the contractor to determine the

reason for the failure. In conjunction with NREL, an independent failure analysis was conducted. The initial findings indicated the failure to be related to the previous blade strike event. The analysis did not find any inherent flaws in the two-bladed downwind technology, but suggested that further load analysis be performed on the design. The Commission authorized WTC to complete the load analysis on the revised design of the EMD called the EMD-2.

The Commission conducted an independent technical due diligence of the technology. Separate from the technical analysis conducted by NREL, the Commission examined WTC's organization and operation structure. Given the findings of the loads analyses conducted by NREL and the separate due diligence report, the Commission project team determined that WTC would need to secure additional match funding and partners to return the project to viability. WTC was unable to find sufficient match funding and the project was closed out in June, 2004

REN Projects Completed in 2003

Collins Pine Co. BCI Cogeneration Project

Contract #: 500-98-043
Contractor: Collins Pine Company
Subcontractors: BC International Corporation : National Renewable Energy Laboratory (NREL) : Plumas Corporation : Kemestrie : TSS Consultants : ProForma Systems, Inc. : Tembec, Inc. : Raphael Katzen Associates International, Inc. : CIFAR
Contract Amount: $1,148,961
Match Amount: $382,274
Contractor Project Manager: Wade Mosby (503) 417-7755
Commission Contract Manager: Zhiqin Zhang (916) 654-4063
Status: Cancelled

Project Description:
The purpose of this project is to determine the technical and economic feasibility of integrating a new biomass-to-ethanol facility with an existing biomass power plant, located in Chester, California. If feasible, these two facilities would be operated together and become customers for each other's products. The ethanol facility would produce lignin for sale to the biomass boiler, which it would use to generate electricity and steam. In addition, the biomass power plant would generate electricity and steam for sale to the ethanol facility.

This project seeks to lower the biomass power plant's electricity-generating costs so that it can become more cost-competitive after subsidies for renewable energy power plants expire in 2004. The lignin fuel supply from the ethanol facility may help to lower the biomass power plant's costs of generating electricity. The ethanol facility would also generate income by producing and selling ethanol and other value added co-products to customers outside of Chester, CA. The project is Phase I of a four-phase effort. If the results of Phase 1 are technically and economically positive, then facility developers may proceed with subsequent phases to design, permit, finance, construct and operate the ethanol facility.

This project supports the PIER Program objectives of:
- Improving energy cost/value.
- Improving the environment, public health and safety.
- Improving electricity reliability, quality and sufficiency.
- Address important RD&D gaps.
- Providing greater choices for CA consumers.
- Connecting to near-term market applications.

Proposed Outcomes:
1. Improve system reliability and power quality of California's electricity by seeking a cost-effective way to operate a distributed generation power plant in a rural area, which is prone to electricity supply disruptions.
2. Maximize market/economy connection by providing positive impacts to California local economies by the creation of new jobs and new tax revenues in a rural area.
3. Determine whether the ethanol facility can produce up to 20 million gallons per year of ethanol from softwood feedstock using BC International (BCI) technologies.
4. Determine whether lignin from the ethanol facility can partially displace the existing fuel of Collins Pine biomass power plant by 30 percent to 60 percent.
5. Identify at least one co-product, other than lignin or ethanol, which can be produced by the ethanol facility.
6. Reduce the cost of electricity production at the Collins Pine biomass power plant by at least 1.5 cents/kWh.
7. Identify at least one co-product, other than lignin or ethanol, which can be produced by the ethanol facility and has a value of at least $2/pound.

Actual Outcomes:
In October of 1998, the Commission signed the Contract with Collins Pine Company to fund a research, development, and demonstration project under the Public Interest Energy Research (PIER) program. The total PIER budget to this contract is $1,148,961. The match funding of $375,274 is provided by DOE/NREL. The project was originally scheduled to be completed by December 2000. The project completion schedule was extended to December 31, 2001.

The Energy Commission (Commission) issued a stop work order to this contract on September 19, 2001 due to lack of deliverables due from subcontractors, in particular BC International (BCI). The Commission sent a stop work order following up letter that included a list of lacked deliverables on October 11, 2001. To respond BCI's comments provided to the stop work order following up letter, the Commission sent a response letter on December 4, 2001 to address remaining specific issues regarding subtasks/deliverables. The issue of the pilot scale results and the ability to continue testing at Collins Pine with the generated "simulated" lignin was discussed at length with DOE/NREL and the project team at a December 20, 2001 CPR meeting at the Energy Commission.

Based on a review of the documentation submitted, we believe that BCI has still not adequately responded to the issues on the project. The two remaining outstanding issues with this project include:

1. Lack of fundamental data associated with ethanol process validation activity. Examples of the missing fundamental information include material and energy balance data for all process and utility streams, process flow diagrams, sized equipment specification, and cost information.
2. Ability of the electricity generation side of the facility to use the "simulated" lignin from the ethanol generation side as a fuel.

The remaining issues pose a serious question on the continuation of this contract. The Commission Contract Manager agreed and recommended to the Commission's Research and Development Policy Committee that the contract be terminated. The recommendation to terminate the contract was heard and approved by the Policy Committee on March 20, 2003.

Project Status:
The contract was terminated on April 14, 2003.

Improving Energy Recovery at the Geysers Geothermal Field by Delineation of In-Situ Saturation

Contract #: PIR-00J-004
Contractor: Stanford University
Contract Amount: $258,781
Match Amount: $66,780
Contractor Project Manager: Roland Horne (650) 723-9595
Commission Contract Manager: Gail Wiggett (916) 653-7551
Status: Completed

Project Description:
The purpose of this project is to develop an understanding of present and past fluid saturation patterns at The Geysers geothermal field, using:

1. Laboratory measurements on actual rock core samples from the reservoir.
2. Inferring saturations from field production data, by applying mathematical modeling methods developed at Stanford University.

The Geysers geothermal field is the largest in the world, representing an important fraction of California's electrical power generation capacity. Over the past ten years, energy production from the field has been falling as the reservoir "matures." Recent activities of wastewater injection into The Geysers have indicated that it may be possible to slow if not reverse the decline in energy production. However, the ultimate energy output for electricity generation and the optimal strategy for increased injection of wastewater are uncertain because of the difficulty in determining the distribution and flow characteristic of the underground fluids. Recovering energy from a geothermal reservoir requires that mass be withdrawn from it. The basic components of the resource at The Geysers are its reserves of steam and immobile, or in-situ water. Under exploitation the vapor-dominated field can be depleted of water in some places, to form a dry or superheated zone. There is then a recharge of steam from boiling of the immobile water. Even though the steam is the principal recovery fluid, by mass the immobile water is a much larger component of the reservoir fluid than the steam. Therefore it is important to quantify the immobile water in the reservoir. Knowing the immobile water saturation will provide better understanding of the fluid storage capacities of the rocks. This is valuable for estimating the performance of a geothermal reservoir and its capacity for further exploitation.

This project supports the PIER Program objectives of:

- Improving energy cost/value of California's electricity by helping to provide reliable base load electric power.
- Improving the environment, public health and safety by providing data that can be used to help maintain electric production from the nation's largest non-hydro renewable energy source.
- Improving electricity reliability/quality/sufficiency of California's electrical system by providing information that will be help to maintain the viability of a major source of renewable energy.
- Strengthening the California economy by using an indigenous energy source within the state.
- Providing greater choices for California consumers by helping to prolong the life of The Geysers and increasing the availability of "green" power.

Proposed Outcomes:
Production at the Geysers has been in decline in recent years, until large-scale water reinjection, notably from the Lake County Sanitation District pipeline, began to renew the resource. An additional large-scale reinjection pipeline (the Santa Rosa pipeline) came on-line in late 2003. Knowing where saturation occurs now and where it occurred in the past is expected to improve managers' ability to make strategic decisions about operations, development and management, by aiding in understanding where exploitation has led to dry-out and where immobile water mass might be, or might have been, rejuvenated by injection. This can help in designing locations and timing of large and small scale injection projects. Presenting results of the project in meetings and journals will benefit the technical research community and provide a conduit for practical application.

Actual Outcomes:
Historical records of well pressure, temperature flow rate and enthalpy from wells distributed over The Geysers area, operating in different time periods and in different operating units, were gathered from public and private sources to provide as complete a snapshot as possible of conditions over time and space in the resource field. Data analysis used a model developed by the Stanford team to infer the historical in-situ water saturation at The Geysers. The researchers were able to show that well performance data history can be used to infer in-situ water saturation. Using the data from the wells and the model, the team determined the stable initial and dry-out subsurface temperatures for individual wells in the field, and computed the in-situ water saturation in the vicinity of those wells. By using wells that started operation over a range of time, the team inferred the evolution of saturated conditions in the reservoir. They also were able to determine the variation in saturation from one area to another within the reservoir and to identify superheated areas. This work involved analyzing the data for over 500 wells for which records are available. This work identified 177 wells that had become superheated and 147 wells that are inferred not to have reached superheat. The remaining 179 wells in the database have data that is too sparse to observe temperature-pressure trends. Most of the superheated wells are in the northwest portions of the field. The saturated (i.e., not superheated) wells are mostly in the southeast positions of the field.

The team also investigated the possible effect of increase in the calculated saturation values due to artificial reinjection. Reinjection influence was simulated using TOUGH2. Simulations varied the flow rate and location of reinjection with respect to nearby production wells. It was found that higher injection flow rates and proximity to producing wells increases the apparent saturation values. This influence may explain the apparently higher in-situ water saturation in the Southwest zone of The Geysers field. It is likely therefore that optimizing injection rate, location, and possibly temperature can be used to increase local apparent saturations in the vicinity of a producing well.

To facilitate technology transfer, make the results of the work available to the operating companies, and make the methods known to the research community, several papers were prepared and presented in meetings and journals. Practical application of the results of this work will need to be made by the field operators. Electronic and hard copies of these were part of project submittals and are included in the Commission's files. The Final Report for the project will be available through the Energy Commission's website and in the Commission library.

Project Status:
The project has been completed.

Renewable Technology Strategic Information

Contract #: 500-02-028 **Project #:** 15
Contractor: Electric Power Research Institute (EPRI)
Project Amount: $45,000
Contractor Project Manager: Chuck McGowin (650) 855-2445
Commission Contract Manager: George Simons (916) 654-4659
Status: Completed

Project Description:
Renewable energy technology development and deployment are proceeding rapidly throughout the world as power agencies and project developers respond to the growing demand for new green power sources and technology developers continue to improve the efficiency and cost performance of renewable technologies. As a result, renewable technology status, performance, cost, installed capacity, markets, and other characteristics continue to change rapidly. This project maintains an up-to-date and objective strategic assessment of renewable technology for use in strategic planning and decision making.

This project supports the PIER Program objective of:

- Providing greater choices for California consumers by supporting compilation and updates of renewable technology development and deployment information.

Proposed Outcome:

1. A status report and regularly issued updates that describe renewable technology status including: performance, cost, installed capacity, and markets.

Actual Outcome:

1. Technical Report, Renewable Energy Technical Assessment Guide (TAG-RE), EPRI Product # 1004938.

Project Status:
The project has been completed.

REN Projects Completed in 2002

Application of Small Modular Biopower System for Power Generation from
Forest Residue

Contract #: 500-99-029
Contractor: Community Power Corporation
Subcontractors: Shell International Renewables : National Renewable Energy Laboratory (NREL)
Contract Amount: $645,827
Match Amount: $609,695
Contractor Project Manager: Robb Walt (303) 933-3135
Commission Contract Manager: Prab Sethi (916) 654-4509
Status: Completed

Project Description:
The purpose of this project is to design, develop and demonstrate a stand-alone, small modular biopower (SMB) system rated at 12.5 kW for a distributed generation application providing both electricity and heat using two different types of forest residue.

This project is Phase II of an SMB initiative co-funded by the National Renewable Energy Laboratory (NREL)/US Department of Energy (US DOE). In this Phase, the Contractor shall design, fabricate and test two SMB systems namely NREL SMB and PIER SMB. The NREL SMB project is funded by NREL/US DOE and Shell International Renewables, Ltd. for a rural electrification project in the Philippines. The PIER SMB is funded by PIER and co-funded by NREL/US DOE. The Contractor shall design, fabricate and test PIER SMB, based on lessons learned in NREL SMB, for combined power and heat application at Tsemeta Forest Regeneration Complex, Hoopa, California. Phase I of the SMB initiative is a feasibility stage, completed and funded mainly by NREL/US DOE and not PIER funds.

This project supports the PIER Program objectives of:

- Improving environmental and public health costs/risk of California's electricity by mitigating air quality impacts and reducing environmental risks. If successful, this technology will provide beneficial means of forest residue disposal, reduce wildfires, and reduce air pollution from in-forest burning of slash.
- Improving the reliability/quality of California's electricity by removing barriers to distributed generation technology.

Proposed Outcomes:

1. Proposed Technical Outcomes:
   The overall technical objective of this project is to develop and demonstrate a 12.5 kW small modular biopower system in a displaced retail, combined heat and power application, and collect the data needed to develop the scale-up path to a family of commercially viable systems in California.

   The specific technical objectives are:
   - Provide up to 12.5 kilowatt electric (kWe) and 20 kilowatt thermal (kWt) power to the proposed on-site load.
   - Provide 220 volts, 3 phase power for the proposed load in parallel with the grid.
   - Operate with no more than one operator.
   - Provide 12.5 kWe power using two of the following feedstocks: Oak, Alder, Madrone and/or Douglass Fir.
   - Incorporate system improvements based upon data collected during operation.
   - Translate operating performance of a 12 kW system into clear technical requirements for development of a family of small modular biopower systems between 12 kW and 500 kW.

- Achieve combined heat and power efficiencies of greater than 60 percent. Electrical efficiency to be no less than18,000 Btu/kWh (higher heating value (HHV)).
- At peak power of 12.5kWe,the small modular biomass (SMB) system will meet or exceed California's emission standards for a 4 cylinder automobile internal combustion engine. Nitrogen oxides (NO_x) emissions of engine no greater than 1,500 ppm (at full load, 3% O2). Particulate matter (PM) emissions no greater than 5 ppm.

2. Proposed Economic Outcomes: The overall economic objective of this project is to achieve competitive financial performance for a family of distributed generation applications of the SMB system, both on-grid and off-grid.

   The specific, cost objectives for the minimum and maximum size ranges are shown below. This assumes the global sales of SMB system of 1000 units a year.
   - 500 kW (grid-connected).
     - Capital cost of $600 per kW.
     - Electricity cost of less than 7 cents per kWh.
     - Heat cost less than $0.70 per therm.
   - 12 kW (grid-connected and off-grid).
     - Capital cost of $1,000 per kW.
     - Electricity cost of less than 15 cents per kWh.
     - Heat cost less than $1.20 per therm.

Actual Outcomes:

1. The project kick-off meeting was held at Hoopa Valley on November 1, 2000.
   - Task 2.1 Develop, Install and Operate NREL-SMB:
     - The work related to shakedown testing of the first small modular biopower system developed under Phase 2 contract with NREL was completed. Endurance runs at CPC generated 1 MWh of electricity and 145 hours of operation. The unit was shipped to the Philippines in February 2001, and was installed and commissioned on April 2, 2001 in Alaminos, Philippines for the field endurance testing.
   - Task 2.4 Build/test PIER-SMB (Test Bed):
     Preliminary layout of the SMB system at the Hoopa Forest Regeneration Complex was completed. The system was installed. Testing and analysis was performed.
   - Task 2.9 Deploy PIER-SMB/CHP:
     Modifications were completed to test the system for combined heat and power. A heat exchanger was fabricated and installed on the PIER-SMB to collect waste heat and deliver hot water to the greenhouse.
2. The PIER-SMB was performance tested. In addition, the system was grid connected and was tested in the combined heat and power (CHP) mode. Following are the project outcomes:
   - System was operated in CHP mode at 12.5 kW_e and 20 kW_{th} delivered to the hot water system at Hoopa.
   - More than 80 operational problems were identified and improvements implemented to the gasifier, cooling and cleanup system, dryer subsystem, and char subsystem during the course of the project.
   - The SMB demonstrated a combined heat and power efficiency of 60%.
   - NO_x emissions from the engine were typically less than 150 ppm, and hydrocarbon emissions were negligible.

Project Status:
Project was completed early on June 15, 2002.

Design & Optimization of a Solar Fired 2E Absorption Chiller

Contract #: 500-97-035
Contractor: Bergquam Energy Systems
Subcontractors: Richard Christensen, Ohio State University : Sun Utility Network : Thermal Energy Systems Specialists : Instructional Systems.
Contract Amount: $150,000
Match Amount: $150,000
Contractor Project Manager: Jim Bergquam (916) 383-9425
Commission Contract Manager: Prab Sethi (916) 654-4509
Status: Completed

Project Description:
This purpose of this project was to optimize the performance of a solar-fired, double-effect absorption chiller that can be used for space cooling of small to medium-sized commercial buildings. In addition, the project will modify and test the solar-fired chiller to determine generator configuration and operating conditions that maximize chiller and system performance.

This project supports the PIER Program objectives of:

- Improving the reliability/quality of California's electricity by reducing electrical consumption during peak demand created by cooling commercial buildings.
- Improving the energy cost/value of California's electricity by replacing packaged, compressor-based air conditioning systems with a lower-cost solar absorption system.
- Improving the environment and public health of California's electricity by replacing CFCs in compression air conditioners with environmentally safe lithium bromide and water as the working fluid in a solar-driven absorption chiller.

Proposed Outcome:

1. A high-efficiency, double-effect absorption chiller that is optimized for coefficient of performance (COP), cooling capacity and operating temperature.
   - Solar collectors will drive the chiller.
   - The chiller will have a coefficient-of-performance (COP) in the range of 1.2 to 1.4, when the first stage generator is operated at high temperature (approximately 300 degrees F).
   - The chiller will have a COP in the range of 1.1 to 1.2, when the first stage generator is operated at low temperature (below 250 degrees F).

Actual Outcomes:

1. Thermodynamic computer models of first stage generator were designed and updated to predict and evaluate performance of the solar-fired double effect absorption chiller.
2. The testing to determine the heat transfer co-efficient of generator tubes was completed.
3. A device was built called the Twister which twists the stainless steel strips for greater heat transfer in the generator. With the inserts, the heat transfer coefficient is increased by a factor of 2 to 3.
4. The chiller was tested with the first stage generator at low temperature as well as high temperature and was demonstrated at the specified performance levels.

Project Status:
The project has been completed.

Development of an Extended Logging Tool for Geothermal Exploration and Field Development

Contract #: 500-97-034
Contractor: Electromagnetic Instruments
Subcontractors: Lawrence Livermore National Laboratory
Contract Amount: $1,380,709
Match Amount: $1,407,953
Contractor Project Manager: Michael Wilt (510) 232-7997
Commission Contract Manager: Gail Wiggett (916) 653-7551
Status: Completed

Project Description:
The purpose of this project was to design, manufacture and field test an extended induction logging device for geothermal applications in California. During the 3 year project, hardware and software for a high-temperature and pressure-tolerant logging tool were to be developed and tested in several field trials in California, and if possible, internationally.

This device provides a three dimensional image of the formation resistivity in the vicinity of a geothermal borehole. It can identify electrically conductive regions associated with high temperature fluids and map through-going fractures, which play a crucial role in fluid production in both geothermal and petroleum reservoirs.

The decline of power generation at the Geysers from a peak capacity of nearly 2000 MW to current production of less than 1000 MW emphasizes the need for improved reservoir management. In addition, the cost of geothermal development in new or existing fields is extremely high. The contributions that a subsurface imaging tool like GeoBILT can make to the geothermal industry are important, because improved understanding of a reservoir's fracture systems can help improve the targeting of new geothermal well sites and aid in mapping fractures and permeable zones for production or injection. Other geophysical tools are available, but the Geo-BILT tool is unique in its combined ability to produce 3-dimensional imaging and models at a distance from a borehole AND to operate under rigorous geothermal conditions. Existing commercially available instruments cannot do this.

This project supports the PIER Program objectives of:

- Improving the reliability and quality of California's electricity by providing a tool that can provide improved acquisition of key subsurface data, facilitating better understanding of reservoir fracture systems and formation resistivities, and leading potentially to more effective reservoir management by optimizing field production and coordinating recharge activities.
- Improving the energy cost and value of California's electricity by developing and making available new logging services and enhancing the efficiency of geothermal energy exploration.
- Improving the environmental and public health costs and risks of California's electricity by aiding in developing an environmentally benign renewable energy source.

Proposed Outcomes:

1. Design and construction of instrumentation and accompanying interpretive software that will provide technological solutions to several important problems in geothermal exploration and field development.
2. Provide an instrument that will improve reservoir definition and fracture mapping in geothermal boreholes. This will better define drilling targets and reduce the number of boreholes required to produce adequate steam for power generation.

Actual Outcomes:

1. Successful field tests were conducted at several non-geothermal sites that have known geologic conditions, in order to test the instrument's ability to detect permeability and saturation differences. Field tests under geothermal conditions were conducted as planned at Dixie Valley, Nevada.
2. The first Dixie Valley field test successfully demonstrated that the instrument can operate in high temperatures. This demonstration was a major goal of the project. Significant amounts of valuable data were collected during this test. A second test in Dixie Valley successfully illustrated the instrument's ability to collect 3-dimensional data around the borehole and to image non-horizontal geological structures.
3. GeoBILT holds significant promise for commercialization within the petroleum industry, and remains, at present, the only logging tool available that can operate under rigorous geothermal conditions. There is considerable industry interest in GeoBILT and its further development. Additional new applications of the technology are also being explored, including its use in research studies of seismic zones. Further indication of GeoBILT's perceived potential is given by the acquisition of Electromagnetic Instruments, Inc. by Schlumberger, the world's largest purveyor of geophysical services.
4. EMI personnel made a final presentation of the results at the Energy Commission on 6 December 2002, a copy of which is available through the Commission website. The final report also is available electronically.

Project Status:

The project has been completed. As with many research and development projects, a number of difficulties were encountered that led to delays in the project's schedule. As a result, it was not possible to complete the international geothermal field tests that had been projected as possible tasks late in the contract duration.

Hybrid Solar-Fossil Thermophotovoltaics

Contract #: 500-97-048
Contractor: EDTEK
Subcontractors: Brookhaven National Laboratory : Power Management Systems, Inc. : The Charters Group, Inc. : NML Partnership : Pacific Financial Group
Contract Amount: $867,945
Match Amount: $1,917,107
Contractor Project Manager: William Horne (253) 395-8084
Commission Contract Manager: Prab Sethi (916) 654-4509
Status: Completed

Project Description:
The purpose of this project is for EDTEK, Inc. to design, fabricate and test a modular, hybrid solar/fossil-fueled thermophotovoltaic (SFTPV) system that can produce electricity and process hot water 24 hours per day with a recovery efficiency of about 83 percent. In this system, highly concentrated sunlight is directed into a cavity where the surrounding walls are heated to incandescence, the state where visible light is emitted from a hot object. A natural gas flame
is also directed into the cavity to heat its walls and excite the PV cells, as does the
concentrated sunlight.

This project supports the PIER Program objectives of:

- Improving the reliability/quality of California's electricity by developing a new distributed generation technology.
- Improving the environmental and public health costs/risks of California's electricity through partial use of solar energy, a renewable and non-polluting energy source.

Proposed Outcomes:
Develop, manufacture and demonstrate a pre-production hybrid prototype SFTPV cogeneration power system that can produce economically competitive electric power and thermal energy on a 24-hour basis. The SFTPV power system will convert sunlight to electricity with 25 percent overall efficiency and natural gas to electricity at an overall efficiency of 20 percent while producing process grade hot water at a recovery efficiency of 83 percent.

Actual Outcomes:
The contractor has worked with Cornell University, the University of Houston, and NREL to use ion beam lithography process and e-beam lithography to prepare stencils for the pre-filters. Additionally:

1. The gallium antimony (GaSb) PV cells were assembled into arrays for the test unit and final interconnections were completed.
2. The prisms were fabricated and the reflecting coatings were applied. A dish mounting and tracking system was designed.
3. A test of hydraulic tacking mechanism has been successfully completed.
4. The solar concentrator dishes were fabricated, and the smoothing, reflective and glass protection coatings were applied.
5. The SFTPV system was tested as required per specifications.

Project Status:
The project has been completed.

Natural Gas Cofiring in Biomass Fueled Boilers

Contract #: 500-97-040
Contractor: Gas Research Institute
Subcontractors: ARCADIS Geraghty & Miller International : COEN Company, Inc. : Burney Mountain Power : Fairhaven Power Company
Contract Amount: $655,702
Match Amount: $731,784
Contractor Project Manager: Isaac Chan (773) 399-5411
Commission Contract Manager: Prab Sethi (916) 654-4509
Status: Completed

Project Description:
The purpose of this project is to develop and retrofit low NO_x gas cofire technology on two biomass fired industrial power boilers at Burney Mountain Power and Fairhaven Power. With biomass, the high fuel moisture level and high fuel quality variability reduce electric competitiveness and increase environmental compliance costs. By firing small amounts of gas, approximately 10 percent of total heat input, operators can control the combustion process and avoid the usual problems that accompany combustion of wet biomass. Cofire offers an independently controlled combustion zone with higher temperatures, resulting in faster load response, better CO and opacity burnout, reduces carbon in the ash, and faster, cleaner startup. These benefits are essential for biomass to compete in the volatile deregulated power market that requires greater responsiveness than is now possible.

In this project, GTI will subcontract the low NO_x burner development to the cofire burner developer, Coen. The low NO_x burner will retain the high-pressure drop feature used earlier, but employs segmented fuel gas/ combustion air zones and possibly induces an enhanced draw of (combustion) air using the properties of the (fuel) gas stream. The prototype burner will be installed in two northern California biomass power plants: Burney Mountain Power and Fairhaven Power. At Burney, cofire will allow recovery of lost derate and allow peak revenue load dispatch to effectively meet changing power demand. At Fairhaven, cofire will recover lost derate and allow compliance with CO and NO_x regulations.

This project supports the PIER Program objectives of:

- Improving the reliability/quality of California's electricity by developing a method for improving the economics of grid-connected, distributed electricity generating biomass facilities.
- Improving environmental and public health costs/risk of California's electricity by mitigating air quality impacts from biomass combustion by cofiring biomass with natural gas within an independently controlled combustion zone with high-temperature, turbulent mixing. The low NO_x feature is unique to California, and this demonstration should facilitate cofire permitting at other biomass facilities.
- Impacting local and state economies by preserving employment opportunities in rural areas where these biomass facilities are typically located.

Proposed Technical Outcomes:

1. Develop a low NO_x cofire burner for application to biomass fueled boilers.
2. Apply the low NO_x cofire burner to increase the load following capability and turndown for Burney Mountain Power.
3. Apply the low NO_x cofire burner to reduce CO emissions and recover lost derate with wet wood at Fairhaven Power.

Proposed Economic/Cost Outcomes:

1. Apply cofiring at Burney Mountain Power to capture high revenue power peaks and avoid low revenue periods to allow operation in the deregulated power market and reduce the break-even power price.

2. Apply cofiring at Fairhaven Power to recover lost derate with wet wood and accrue incremental power sales revenue over the differential fuel price.

Actual Outcomes:

1. Burner system installation on the 10 MW-boiler at Burney Mountain Power plant in Burney, California was completed in March 2000. A new gas pipeline from the Pacific Gas & Electric main transmission line to the boiler was installed. Burner start up and system testing and performance optimization was performed during 2001 and 2002.
2. Required modifications to reduce NO_x emissions and performance optimization of Fairhaven Power plant in Eureka, California were incorporated during a scheduled plant outage.

Project Status:

The project has been completed.

PowerGuard California Manufacturing

Contract #: 500-97-049
Contractor: Powerlight Corporation
Subcontractors: Pulse Energy Systems : Trace Technologies, Inc. : Colorado State University : Augustyn + Company : T. Clear Engineering : Feldman, Waldman and Klein : Solarex : Ananda Power Technologies
Contract Amount: $958,991
Match Amount: $1,994,421
Contractor Project Manager: Thomas Dinwoodie (510) 540-0550
Commission Contract Manager: Joe McCabe (916) 654-4412
Status: Completed

Project Description:
The purpose of this project is to expand grid-connected markets for PowerGuard® systems by reducing component and system manufacturing costs, enhancing system reliability, and obtaining specific certifications. PowerGuard® is a rooftop photovoltaic (PV) system providing electrical power. Furthermore, this project established a new California manufacturing facility, using the automated and semi-automated fabrication innovations developed under this contract.

This project supports the PIER Program objectives of:

- Improving the reliability of California's electricity system by developing a renewable, distributed-energy technology.
- Improving the environmental and public health costs/risks of California's electricity by deploying a renewable energy source which does not emit NO_x (nitrous oxides), SO_x (sulfur oxides), and CO_2 (carbon dioxide) when generating electricity.
- Positively impacting California's economy by creating new manufacturing jobs.

Proposed Outcomes:

1. Reduce component and system manufacturing costs.
2. Enhance system reliability.
3. Obtain specific certifications.

Actual Outcomes:
Over the course of this contract, many improvements were made to the PowerGuard product and manufacturing process. These enhancements have reduced the cost of PowerGuard installations, improved the quality and reliability of the PowerGuard product, added features to PowerGuard systems, and provided paths to new markets. A summary of the major accomplishments is listed below:

1. Production rate rose from 200 tiles per 8-hour shift to more than 500 tiles per 8-hour shift.
2. System cost of PowerGuard was reduced by 38%.
3. Balance of System cost was reduced by 68%.
4. Quality of PowerGuard was improved through the implementation of improved production tools and inspection equipment.
5. A sloped PowerGuard tile design was developed.
6. A comprehensive warranty was developed for PowerGuard systems.
7. Extensive wind tunnel testing was used to refine the PowerGuard tile design and to develop installation criteria for a wide variety of conditions and geographical locations.
8. Integrated design software was developed using an off-the-shelf platform to simplify the design of PowerGuard systems by Value-Added Resellers.
9. Seventeen PowerGuard tiles, using PV modules from different manufacturers, have been listed by UL.
10. PowerGuard accessories such as curbs, T-harnesses, and standardized combiner boxes have been submitted to UL for listing.

11. PowerLight has applied for certification of PowerGuard by the International Conference of Building Officials (ICBO).
12. All required tests have been completed to allow the use of the CE mark, allowing the sale of PowerGuard into the European Union.
13. All test required by the International Electrotechnical Commission (IEC) and Institute of Electrical and Electronics Engineers (IEEE) standards have been passed.
14. Modular and standardized PowerGuard system packages were developed to reduce the cost of small systems.
15. An installation manual and training program was produced for installing PowerGuard systems.
16. Clean-up and waste management processes have been improved leading to the recycling of almost all waste products.
17. PowerLight has ensured that the production of PowerGuard conforms to National Environmental Policy Act (NEPA), Occupational Safety and Health Administration (OSHA), and all other applicable federal and state regulations.

Project Status:
This project is completed, under budget, on time and is providing royalties to the State of California. Many accomplishments were achieved including:

- Increased production rates.
- Reduced system costs.
- Increased product quality.
- UL listings.

PowerTherm Product Development

Contract #: 500-97-046
Contractor: Powerlight Corporation
Subcontractors: Advanced Thermal Technologies, Inc. : Sealed Air Corp. : Kathabar, Inc. : David Roodvoets
Contract Amount: $542,362
Match Amount: $1,052,361
Contractor Project Manager: Thomas Dinwoodie (510) 540-0550
Commission Contract Manager: Joe McCabe (916) 654-4412
Status: Completed

Project Description:
This purpose of this project is to test a commercial photovoltaic/rooftop solar energy collector system providing electric power and thermal energy from sunlight. The integration of a solar-thermal component with the Contractor's PowerGuard® photovoltaic system will create a hybrid photovoltaic/thermal (PV/T) system, called PowerTherm™. This technology is suitable for buildings with flat to moderately sloping roofs and will increase the economic value of PV roof-tile systems for commercial building owners by providing them with two ways to lower their energy utility costs: PV-electrical generation and solar hot-water production for on-site use.

The PowerGuard® product was substantially advanced under a product R&D contract with the Commission's Energy Technologies Advancement Program and has been successfully tested in dozens of applications internationally. PowerGuard® incorporates state-of-the-art PV technology with extruded foam backing into roofing tiles. These tiles, or panels, are electrically connected to an inverter that feeds quality AC Power to the building's electrical system at or near peak load demand periods for electricity suppliers. This technology can be integrated into new and re-roofing projects, or readily applied over existing roofs.

This project supports the PIER Program objectives of:

- Improving the reliability/quality of California's electricity system by developing a distributed-energy technology.
- Improving environmental and public health cost/risks of California's electric system by deploying a renewable energy source that does not emit nitrous oxides, sulfur oxides, and carbon dioxide when generating electricity.

Proposed Outcomes:

1. Research, develop, and demonstrate a cost-effective PowerTherm™ product for commercial and residential building owners.
2. Improve heat transfer between the PV laminate and solar-thermal absorber by 29 percent.
3. Increase the thermal performance of the overall system by 38 percent.
4. Improve the overall system efficiency by 98 percent over side by side PV and thermal collectors.
5. Achieve a net (thermal-only) system production tile cost of less than $6 per square foot.
6. Achieve a thermal component payback of less than 5 years in specified markets.

Actual Outcomes:

1. Identified lucrative target markets for PowerTherm: through extensive market analysis and a thorough assessment of product capabilities, commercial and residential pool heating applications in Hawaii and California were identified as ideal near-term markets for this product.
2. Created initial product concept: by leveraging the successful product development and manufacture of PowerLight's flagship product, PowerGuard©, PowerLight quickly initiated development and testing of its first PV/T product concept.
3. Developed a unique product: through design iteration, materials research, testing, and development of supplier relationships, PowerLight created a unique, high quality product which

uses inexpensive flexible thin film technology bonded to commercially available unglazed solar thermal collectors. Each 4'X10' collector will produce approximately 315 kWh of electricity and 2,100 kWh of heat annually for swimming pools in a California climate.

4. Developed advanced manufacturing and fabrication techniques: improvements in the manufacturing process were made by reducing both cost and cycle time. Design and development of unique lamination equipment and materials led to significant progress toward product commercialization.
5. Deployed six successful demonstration systems: these systems were installed and monitored at two sites in California and one in Hawaii for testing and performance verification purposes.
6. Researched applicable certifications needed for commercialization: these included ICBO, IEC and UL certifications. UL conducted a design review of PowerTherm.
7. Developed business and marketing strategies: PowerLight developed a finance packaging plan, identified and built alliances with key industry partners, and developed installation, operation, and maintenance plans for the product.
8. Developed equipment that can be used both for production and further research.
9. Optimized critical manufacturing process parameters: through iterative testing and trial manufacturing runs, these parameters were adjusted in order to achieve high quality product parts.
10. Produced full-sized prototypes for certification and field-testing purposes: demonstration systems were installed to monitor performance and reliability. In addition, a full sized system has been sent to FSEC for evaluation.

Project Status:
This project is completed, under budget and on time.

Renewable Technology Options & Green Power Marketing - Program 84

Contract #: 500-00-023 **Project #:** 60-61
Contractor: Electric Power Research Institute (EPRI)
Project amount: $45,522
Match amount: $503,463
Contractor Project Manager: Chuck McGowin (650) 855-2445
Commission Contract Manager: George Simons (916) 654-4659
Status: Completed

Project Description:
The purpose of these EPRI projects is to provide information on the status, performance, and cost of renewable generating technologies, as well as information to support green power marketing. The program supports projects that address field verification and lessons learned in wind, solar photovoltaics, solar thermal, biomass, geothermal, low impact and emerging hydro, and other renewable energy technologies.

This project supports the PIER Program objectives of:

- Improving the environmental and public health costs/risks of California's electricity by increasing the potential for application of renewables by providing accurate information on performance, energy and non-energy benefits, costs, and best practices.
- Improving the reliability/quality of California's electricity by facilitating the integration of electricity from distributed generation technologies into the State's electricity transmission and distribution system.

Proposed Outcomes:

1. Produce a technical assessment guide to renewable energy that provides accurate information on technology status, installation history, performance and cost for a range of renewable energy technologies, including photovoltaic, solar thermal, wind, biomass, waste fuels, geothermal, and small hydroelectric systems.
2. Develop and deliver information about renewable energy to support public outreach programs, press briefings, presentations and speeches.
3. Conduct field verification evaluations of the performance, cost, reliability, power quality, environmental emissions, and economics of distributed renewable energy generation.

Actual Outcomes:

1. Technical Assessment Guide on Renewable Technologies.
   - The *EPRI Renewable Energy Technology Assessment Guide 2002* (TAG-RE) (1004196) was updated and issued in print, electronic (CD-ROM), and web-based formats. The TAG-RE provides comprehensive, detailed information on the technology status, development issues, performance, cost, installed capacity, and markets for renewable technologies. The 2002 TAG-RE incorporates a shift in emphasis in the PV section from central-station to distributed applications, as a result of projected growth in distributed applications. Because distributed installations require a different economic methodology for estimating costs, the TAG-RE includes new cost calculations based on the Clean Power Estimator. This model was designed by Clean Power Research to provide potential PV owners with an accurate and user- friendly tool for calculating the cost of PV, and is licensed by a number of utilities and public agencies. In addition, TAG-RE users will have access to an online calculation tool. The tool is based on EPRI's TAG calculator, and uses TAG-RE data for wind, central-station PV, and biomass. With the tool, users can run customized cases to obtain cost and performance data.
2. Renewable Energy Information.
   - This program publishes *EPRI Green Power News* (E207557), a bimonthly web-based newsletter that highlights renewable energy technology and market developments.

- A renewable energy brochure (1004198) was produced that addresses the status and benefits of solar PV, wind, biomass and low-impact hydro resources and technologies, plus green marketing issues for all renewables.
- A EPRIweb-based information service, Renewable Energy Current Information Pages, provides continuous updates on renewable energy technology status, performance, cost, installed capacity, opportunities for project collaboration, and state and federal mandates for renewable energy.
- A renewable energy slide show (1004199) was prepared that contains presentations on the status and benefits of solar PV, solar thermal, wind, biomass, and geothermal generation.

3. Field Verification of Distributed Renewable Energy Generation.
   - The first of a series of technical reports—*Field Verification of Distributed Renewable Energy Generation* (1004205)—was submitted for publication. The report documents results of field verification testing and evaluation.

Project Status:
Project is complete.

Residential Electric Power Security

Contract #: 500-97-047
Contractor: Kyocera Solar, Inc.
Subcontractors: Southwest Technology Development Institute : New Mexico State University
Contract Amount: $426,343
Match Amount: $994,799
Contractor Project Manager: Joel Oatman (480) 443-7732
Commission Contract Manager: Joe McCabe (916) 654-4412
Status: Completed

Project Description:
The purpose of this project was to design, assemble, and test a photovoltaic (PV) power system for residential rooftop applications. The project will focus on three aspects of the system:

1. UPG will design, assemble, and test a novel rooftop PV panel attachment and interconnection process.
2. UPG will produce a fully integrated multifunctional dc-ac/ac-dc power collection, conversion, and control unit.
3. Develop an optional low-cost battery unit designed to plug into the Power Unit to provide a dependable supply of energy for critical household loads.

The proposed PV power system will possess features such as low cost, high efficiency, adaptable to a wide range of roof tops, high power quality, and compliance with all NEC, UL, IEEE, and Utility Interconnection Codes and Standards. The developed system is expected to reduce the installed cost of grid connected PV by approximately 34 percent, and improve their reliability by a factor of five.

This project supports the PIER Program objectives of:

- Improving the reliability/quality of California's electricity by increasing reliability over current systems from 10 percent rate of failure to 2 percent rate of failure (a five fold improvement).
- Improving the energy cost/value of California's electricity by optimizing design of residential roof-mounted PV through a system integration approach, increase system modularity to reduce manufacturing costs, and develop standardized hardware and methods for PV/roof attachment to reduce installation costs.

Proposed Outcomes:

1. Develop an advanced version of the multi-functional rooftop PV power processing system with a number of market driven advanced capabilities which do not exist in any commercially available power processing product.
2. Contractor anticipates reducing materials and installation costs (exclusive of the PV module) by 30 percent.

Actual Outcomes:

1. Design revisions of the PV array.
2. Submission of PV Array for UL review.
3. Installation of a production version of the PV Array.
4. Submission of Power Unit CAM files of revised printed circuit boards to vendors.
5. Design revisions of Power Unit electro-mechanical system.
6. Submission of Power Unit for UL review.
7. Design revisions of Energy Storage Unit.
8. Submission of Energy Storage Unit for UL review.
9. Testing of Energy Storage Unit.
10. UL testing of Energy Storage Unit.
11. First draft of Final Report is completed.

Project Status:
The project is completed and the final report will be published on the Energy Commission website.

The Next Generation Turbine Development Project

Contract #: 500-97-032
Contractor: Wind Turbine Co.
Contract Amount: $950,000
Match Amount: $6,935,733
Contractor Project Manager: Lawrence Miles (425) 637-1470
Commission Contract Manager: Michelle Pantoya
Status: Completed

Project Description:
The purpose of this project was to design, develop and demonstrate a utility scale wind turbine that will produce electricity at prices that do not need subsidies or premiums to compete in the emerging electricity marketplace. At 250 kilowatts, this turbine is a horizontal axis, 2-blade, downwind turbine that brings together a number of concepts previously employed in other turbines of this design. In addition, this turbine is the first 2-blade downwind configured wind turbine to be developed in over 15 years, and is believed to be the first turbine to be completely designed employing newly available computer analytic codes that model wind turbine behavior and performance. By designing the turbine as a complete system, WTC is able to substantially improve turbine performance while significantly reducing weight compared with conventional wind turbines. Reducing weight lowers manufacturing costs which, together with improved performance leads directly to lower cost electricity. This machine will be well suited for both grid-connected, wind farm applications and for stand alone applications in combination with other generating and/or energy storage technologies.

This project supports the PIER Program objectives of:

- Improving the reliability/quality of California's electricity by increasing the likelihood that wind energy will not only remain a viable source of renewable electricity, but will actually supply a growing share of the electricity consumed in the state.
- Improving the energy cost/value of California's electricity by developing a wind turbine capable of producing electricity at prices competitive with the lowest cost sources of conventional electricity generation currently recognized to be natural gas-fired combined-cycle combustion turbines.
- Improving the environmental and public health costs/risks of California's electricity by reducing air pollution and eliminating emissions that are believed to cause global warming.
- Improving the safety of California's electricity by employing a unique tubular tower design of sufficient diameter to provide an internal passage from the ground to the tower top (nacelle).

Proposed Outcomes:

1. Bring to market readiness a utility scale wind turbine that is cost competitive with other sources of energy generation.
2. Develop and field test a proof of concept wind turbine intended to demonstrate the feasibility of concepts and systems employed in the wind turbine, and to validate the computer codes used in design the turbine through testing.
3. Develop a prototype turbine that is intended to be a commercially viable machine.
4. Enhance the development of a commercial product that provides renewable, clean, reliable and cost competitive energy.
5. Aim at reduced capital costs due to weight reductions in key turbine components.

Actual Outcomes:
The prototype turbine was designed, built and demonstrated at the National Renewable Energy Laboratory (NREL) test site. The project has achieved all technical objectives of incorporating advance design techniques and innovative engineering solutions in the design of the proof of concept model. Although delays were incurred, the project has remained within budget. The POC has amassed nearly 1000 hrs in attended and unattended operation mode. The POC will continue operations and will serve as a testing and instrumentation platform for the development of the EMD in Phase II of the project at a southern California test site. At this time, the POC will remain at the NREL site for continuous testing and monitoring.

Project Status:
Project is complete.

TrueWind Solutions, LLC

Contract #: 500-01-009
Contractor: TrueWind Solutions, LLC
Contract Amount: $150,000
Contractor Project Manager: Michael Brower (978) 749-9591
Commission Contract Manager: Michael Kane (916) 654-7119
Status: Completed

Project Description:
The purpose of this contract was to develop more accurate and reliable wind resource maps for California using state-of-the-art numerical modeling techniques and site validation data. This effort not only updates the existing annual wind resource map for California produced in the late 1970s, but it will include several enhancements including the incorporation of new meteorological, geographical and terrain data that have been collected but were unavailable back when the original map was produced. Validation of map results will also be performed in conjunction with the modeling effort. These new maps will help to better define wind corridors as well as identify new potential sites for wind energy integration.

The objective of this effort was to produce high-resolution wind maps of California's complex distribution of wind resources, including nearby offshore areas. Maps showing the mean annual and seasonal wind speed and wind power density on a 400m by 400m grid will be generated in electronic and printed format for multiple elevations above ground level (e.g., 30, 65, and 100 meters). The new map will have a resolution of 400 meters squared in contrast to the existing map that has a resolution of 25 kilometers squared. Because of this, the new maps will show more variability in the wind resources than the old map to better help identify promising areas for wind energy development. The new maps will also use Geographic Information System (GIS) software, overlaying significant features such as power lines, park boundaries, and roads to support future wind energy siting and planning decisions and the evaluation of wind energy development opportunities.

This project supports the PIER Program objectives of:

- Improving energy cost/value of California's electricity by accelerating the initial stages of wind project development with reliable wind maps that substantially reduce risk and siting barriers for new developers.
- Improving electricity reliability/quality/sufficiency of California's electrical system by:
  - Providing the most current and reliable information on wind resource data for the state.
  - Providing data for identifying new potential sites for wind energy integration.
  - Providing high-resolution wind data useful for forecasting and optimizing wind resource management.
- Strengthening the California economy by encouraging development of new wind sites and job opportunities.
- Providing greater choices for California consumers by supporting the expansion of clean energy resources and by providing data to make the resources more manageable.
- Improving the environment, public health and safety by providing the most reliable and updated data for basing decisions and integrating with existing infrastructure (transmission) and planning strategies.

Proposed Outcomes:

1. Updated wind resource maps for California with detailed seasonal and altitude variation data needed for planning and forecasting.
2. Access to state-of-the-art numerical modeling technique and expertise to integrate new information in a timely and efficient manner to provide future updates.
3. Web accessible new maps that are in a format that can also be immediately integrated with existing State cartography system (GIS format).
4. Reliable wind resource data to assist wind project developers.
5. Reliable upper altitude (≥ 50 meters) wind data to assist wind turbine manufacturers in developing safe, efficient and affordable wind turbines.

Actual Outcomes:

The project was successfully completed on time and under budget. Selected wind maps are available for download (JPG format) on the Energy Commission web site. Hard copies or GIS compatible data files can be ordered from the Commission Cartography Office at 916-654 3902.

Project Status:

The project has been completed.

REN Projects Completed in 2001

Renewable Technology Options & Green Power Marketing - Target 84

Contract #: 500-00-023 **Project #:** 25-29
Contractor: Electric Power Research Institute (EPRI)
Project amount: $223,449
Match amount: $2,792,100
Contractor Project Manager: Chuck McGowin (650) 855-2445
Commission Contract Manager: George Simons (916) 654-4659
Status: Completed

Project Description:
The purpose of this project is to address the barriers renewable energy technologies face in spite of customer enthusiasm, technology advances, and dropping prices. Still needed are standardized technology and control protocols, more efficient operating strategies, and broader definitions of the true benefits of renewable energy. This EPRI target packages objective information and real-world experience focusing on three main options—wind power, photovoltaics, and biomass. Specifically, EPRI will manage California's wind energy forecasting project, and broker other collaborative projects with utilities, DOE and others. EPRI will deliver results in areas including biomass cofiring with natural gas, wind power, a renewable energy technical assessment guide, and photovoltaics. This EPRI target provides information on renewable technology performance and costs, analyzes the energy and non-energy benefits of deploying renewable technologies, and offers an inside look at the working experiences of companies around the world.

This project supports the PIER Program objectives of:

- Improving the environmental and public health costs/risks of California's electricity by increasing the potential for application of renewables by providing accurate information on performance, energy and non-energy benefits, costs, and best practices.
- Improving the reliability/quality of California's electricity by facilitating the integration of electricity from distributed generation technologies into the State's electricity transmission and distribution system.

Proposed Outcomes:

1. Produce a technical assessment guide to renewable energy that provides accurate information on technology status, installation history, performance and cost for a range of renewable energy technologies, including photovoltaic, solar thermal, wind, biomass, waste fuels, geothermal, and small hydroelectric systems.
2. Provide guidelines and expert assistance for selecting, designing, and installing cost-effective photovoltaic systems.
3. Provide field wind turbine performance and economic data for advanced early commercial wind turbines that have not been widely deployed.
4. As part of the DOE-EPRI Wind Turbine Verification Program (TVP), conduct an outreach workshop to provide a forum for TVP host utilities, equipment manufacturers, community leaders, and others to discuss the results of the TVP program and lessons learned.
5. Provide information on biomass cofiring projects in the ongoing DOE biomass cofiring field-testing and demonstration program.
6. Collect information and assess the impacts of distributed renewable energy power generation on the operations and reliability of microgrid systems.

Actual Outcomes:

1. Technical assessment guide on renewable technologies.
    - The *EPRI Renewable Energy Technology Assessment Guide* (TAG-RE) (1004034) was updated and published. The TAG-RE provides comprehensive, detailed information on the technology status, development issues, performance, cost, installed capacity, and markets for

renewable technologies. This product is issued in both print and electronic (CD-ROM) formats.

2. Selecting, Designing, and Installing Cost-Effective PV Systems.
   - Researchers applied EPRI-developed information on PV and green power markets to case studies of grid-connected PV and PV-hybrid systems to illustrate best practices. Results are presented in a technical report, *Case Studies of Grid-Connected PV Systems* (1004037), published in March 2002.
3. Field Verification of Wind Turbine Performance and Economics – As part of the DOE-EPRI Wind Turbine Verification Program (TVP), EPRI helps transfer the experience acquired in TVP wind turbine projects to turbine vendors, wind power developers, government agencies, utilities, and other interested parties so that the lessons learned can be applied to future projects. To date, EPRI has issued 21 reports on project development and operation for seven DOE-EPRI TVP wind projects located in Alaska, Iowa, Nebraska, Texas, Vermont, and Wisconsin. In 2001, EPRI published the following
   TVP reports:
   - *Iowa/Nebraska Distributed Wind Generation Projects First and Second Year Operating Experience: 1999-2001: U.S. Department of Energy-EPRI Wind Turbine Verification Program* (1004039).
   - *Kotzebue Electric Association Wind Power Project Second Year Operating Experience: 2000-2001: U.S. Department of Energy-EPRI Wind Turbine Verification Program* (1004040).
   - *Wisconsin Low Wind Speed Turbine Project Third Year Operating Experience: 2000-2001: U.S. Department of Energy-EPRI Wind Turbine Verification Program* (1004041).
   - *Big Spring Wind Power Project Second Year Operating Experience 2000-2001: U.S. Department of Energy-EPRI Wind Turbine Verification Program* (1004042).
4. Annual TVP Outreach Workshop.
   - The workshop was conducted and presentation notes published.
5. Biomass Cofiring.
   - A technical report – *Annual Report on Biomass Cofiring Program* (1004601) – was published. The report documents nine years of EPRI/DOE industry engineering analysis and field testing regarding wood and other biomass fuels cofired with coal in utility coal-fired boilers.
6. Distributed Renewable Energy Impacts on Microgrid Systems.
   - Researchers developed information on the impacts of solar, wind, small hydro, biomass power on the operation, reliability, power quality, emissions, and economics of microgrid systems. Results are presented in a technical report – *Distributed Renewable Energy Generation Impacts on Microgrid Operation and Reliability, Draft Report* (1004045) – published in June 2002.

Project Status:
The project has been completed.

REN Projects Completed in 2000

California Renewable Energy Technology Market & Benefit Assessment

Contract #: 100-98-001 **Project #:** 26
Contractor: Electric Power Research Institute (EPRI)
Subcontractors: Global Energy Concepts
Project Amount: $340,352
Contractor Project Manager: Chuck McGowin (650) 855-2445
Commission Contract Manager: George Simons (916) 654-4659
Status: Completed

Project Description:
The purpose of this project is to develop an understanding of the current and future performance and costs of renewable energy technologies and resources in California. The project encompasses a multi-phase program that will complement the market analysis performed by the Renewable Energy Program and quantify the benefits of renewable energy research and development (R&D) programs. It also addresses technological issues confronting the manufacturers and developers of renewable energy systems in California. Project results will include renewable resource maps of California, descriptions of renewable energy technologies and their status, market assessments, likely development pathways, current and projected cost and performance, potential for quantified environmental benefits, descriptions of evolving markets and service, and data on key customers and players in the industry. Renewable energy technologies to be addressed include biomass and waste fuels, geothermal, small hydro, solar photovoltaic, solar thermal, wind power, and ocean or tidal current power.

This project supports the PIER Program objectives of:

- Improving energy cost/value by helping make renewable electricity more affordable, cleaner, reliable, and secure.
- Improving the reliability/quality of California's electric system by identifying issues with a direct impact on research, development and demonstration cost-competitiveness, reliability, dispatchability, and power quality.
- Strengthening the California economy by analyzing market trends, quantifying benefits, and identifying important manufacturers, developers and projects.
- Improving the environmental and public health costs/risks of California's electricity by increasing the proportion of environmentally clean renewable technology in the California energy mix.

Proposed Outcomes:

1. Identify the current status of renewable technology in California, including the type, location, capacity, duty cycle and operating characteristics of renewable energy generation current deployed in the state.
2. Identify the total market size of each technology in California and how it is affected by regulatory and policy issues such as air quality, utility deregulation, green markets, recovery of stranded costs, and federal tax credits.
3. Assess the economics of renewable energy generation.
4. Identify potential new players in California's renewable energy marketplace.
5. Characterize the technologies most likely to succeed in both large- and small-scale markets.
6. Quantify renewable energy benefits and summarize market data.

Project Status:
The project has been completed.

California Wind Energy Forecasting System

Contract #: 100-98-001 **Project #:** 23
Contractor: Electric Power Research Institute (EPRI)
Subcontractors: Risoe National Laboratory(Denmark) : TrueWind Solutions, LLC : University of California, Davis : Weather Service International
Project Amount: $508,344
Contractor Project Manager: Chuck McGowin (650) 855-2445
Commission Contract Manager: George Simons (916) 654-4659
Status: Completed

Project Description:
The purpose of this project is to develop a California Wind Energy Forecasting System to forecast the hourly wind generation in the State's wind areas.

The lack of reliable wind energy forecasts, especially for "next day" conditions, threatens to limit the competitiveness of existing wind plants, as well as constrain future installations. Lacking accurate information, owners and operators of existing plants can incur substantial financial risks when entering competitive bidding for real-time and next-day power supply and ancillary service contracts. Missing these opportunities is devastating for current wind energy suppliers, and a deterrent to prospective investors in new facilities.

The development of an accurate forecasting system could boost private sector investment in wind energy facilities while improving grid operations. Accurate wind forecasting would help wind energy compete with other energy sources in real-time and next-day power markets, and help establish a significant, sustainable role for wind energy in California.

This project supports the PIER Program objectives of:

- Improving the environmental and public health costs/risks of California's electricity by increasing the use of pollution-free wind energy.
- Improve the cost/value of California's electricity by reducing the risks faced by wind plant owners and operators that offer cost-competitive power.
- Improve the reliability of California's electricity by increasing the likelihood that wind energy will remain a viable and growing source of renewable electricity.
- Strengthening the California economy by encouraging deployment of new wind plants.

Proposed Outcome:
Develop and test a wind energy forecasting system that will enable wind generation to effectively compete with other energy sources in real-time and next-day power markets. This is likely to accelerate investment in new capacity, helping establish a significant, sustainable role for wind energy in state and regional generation portfolios.

Actual Outcomes:
In 2001 EPRI executed nondisclosure agreements with host wind project operators, R&D contractors, and meteorological consultants involved in the development and testing of wind forecasting systems at multiple wind plant sites in California. Host agreements were executed with SeaWest, which operates the 66.6 MW Mountain View I and II wind project in the Palm Springs area, and WindWorks/Wind Power Partners 1987 and 1988, which owns 90 MW of Kenetech wind turbines at Altamont Pass. SeaWest and WindWorks/Wind Power Partners' operating unit, PowerWorks, Inc. provided access to daily wind resource and generation data from their respective wind plants. Consulting and R&D agreements were executed with a meteorology consultant and two wind energy forecasting subcontractors. The project development and test period was delayed about 18 months from the original plan due to delays in obtaining the required historical and daily wind resource and turbine generation and availability data from the wind plant operators. In March 2002, the project scope and cost were reduced to ensure that the project could be completed by December 2002. Two subcontractors generated hourly wind speed and

generation forecasts and EPRI evaluated the forecast performance vs. observed data for the Altamont and Mountain View wind projects for the 12-month period, October 2001 through September 2002. The results of the project are documented in two reports, to be published by EPRI and posted on the CEC and EPRI websites during early 2003:

- *California Wind Energy Forecasting System Development and Testing Phase 1: Initial Testing* (1007338).
- *California Wind Energy Forecasting System Development and Testing Phase 2: 12-Month Testing and Evaluation* (1007339).

Project Status:
The project has been completed.

Photovoltaic (PV) Chargeport Demonstration

Contract #: 500-97-011 **Project #:** 3
Contractor: San Diego Gas and Electric Company
Project Amount: $90,000
Contractor Project Manager: Anne Brandon (619) 654-1113
Commission Contract Manager: Jamie Patterson (916) 657-4819
Status: Completed

Project Description:
The purpose of this project was to demonstrate the integration of electricity-generating photovoltaic (PV) panels into a covered parking port to charge electric vehicles. This application of PV will illustrate how the panels can be integrated into the current electrical system for practical applications.

This project supports the PIER Program objective of:

- Improving the environmental and public health costs/risks of California's electricity by providing a clean source of electricity for zero-emission vehicles.

Proposed Outcome:

1. Establish guidelines for future deployment of PV's for electric vehicle charge stations without the need for extensive engineering.

Actual Outcome:

1. This project demonstrated that photovoltaics can be integrated with electric vehicle chargeports to partially offset the amount of electricity used to charge electric vehicles.

Project Status:
The project has been completed.

Renewable Technology Options and Green Power

Contract #: 100-98-001 **Project #:** 18
Contractor: Electric Power Research Institute (EPRI)
Subcontractors: D. Iem Dba Augenstein : Edward A. Holt : Karen Conover : Dr. J. M. Morabito : Thomas Morton : Ron Nierenberg : Rla Consulting : Patricia Weis Taylor : Wind Economics & Technology, Inc. : Ascension Technology : Cedar Falls Utilities : Central & South West Services, Inc. : City of Brownfield, Texas : Cummins Power Generation, Inc. : Fortum Power and Heat : Foster Wheeler Development Corp : Green Mountain Power Company : Kansas Electric Utilities Research Program : Nebraska Public Power District : Nevada Power : New York State Electric and Gas : Pennsylvania State University : Princeton University : Resolve, Inc. : Risoe National Laboratory(Denmark) : Southern Research Institute : Tennessee Valley Authority : University of Delaware : University of Illinois, Urbana : University of South Florida : University of Texas, Austin : York Research Corporation
Project Amount: $678,480
Match Amount: $3,694,856
Contractor Project Manager: Dan Rastler (650) 855-2521
Commission Contract Manager: George Simons (916) 654-4659
Status: Completed

Project Description:
The purpose of this project is to address the barriers renewable energy technologies face in spite of customer enthusiasm, technology advances, and dropping prices. Still needed are standardized technology and control protocols, more efficient operating strategies, and broader definitions of the true benefits of renewable energy. This EPRI target packages objective information and real-world experience focusing on three main options—wind power, photovoltaics, and biomass. Specifically, EPRI will manage California's wind energy forecasting project, and broker other collaborative projects with utilities, DOE and others. EPRI will deliver results in areas including biomass cofiring with natural gas, wind power, a renewable energy technical assessment guide, and PV interconnections. This EPRI target provides information on renewable technology performance and costs, analyzes the energy and non-energy benefits of deploying renewable technologies, and offers an inside look at the working experiences of companies around
the world.

This project supports the PIER Program objectives of:

- Improving the energy cost value of California's electricity by increasing the potential for application of renewables by providing accurate information on performance, energy and non-energy benefits, costs, and best practices.
- Improving the reliability/quality of California's electricity by facilitating the integration of electricity from distributed generation technologies into the State's electricity transmission and distribution system.

Proposed Outcomes:

1. Provide accurate information on wind power technology, markets, and issues to increase the potential for its application in California.
2. Develop a wind forecasting capability to reduce the financial risk for wind generators to bid to supply real-time and next-day wind energy and ancillary benefits to the California Independent System Operator (ISO), Power Exchange (PX), and Automated Power Exchange (APX).
3. Provide accurate information on photovoltaics technology, markets, and issues to increase the potential for its application in California.
4. Provide accurate information on biomass technology, markets, and issues to increase the potential for its application in California.
5. Conduct a Tailored Collaboration entitled "Biomass Cofiring with Natural Gas in California: Phase I Study" to identify feasible options for integrating biomass use with natural gas power systems.

Actual Outcomes:

1. Wind power information.
   - Performance test results were compiled from the DOE-EPRI Wind Turbine Verification Program, which features seven projects conducted throughout the world, documenting data on operations and availability of five different leading technologies. Findings were published in news bulletins and eight technical reports.
   - A report entitled Wind Power Productivity Improvement and Procurement Guidelines was published.
   - Improvements were suggested to the wind technology of Zond, the only large U.S. manufacturer of wind power technology, which is located in California.
   - The EPRI Renewable Energy Technology Assessment Guide (TAG-RE) was published with a section on wind power. The TAG-RE provides comprehensive, detailed information on the technology status, development issues, performance, cost, installed capacity, and markets for renewable technologies.
   - Information was compiled on wind power as part of EPRI's renewable energy briefing materials, brochures, CD-ROM, and web site.
2. Wind power forecasting.
   - Development of a modeling system to issue twice-daily forecasts of hourly wind generation was initiated in parallel by three different companies. Development and testing are to continue in 2001.
   - A report was published on the European Union wind energy forecasting model development and testing.
3. Photovoltaics (PV).
   - The EPRI Renewable Energy Technology Assessment Guide (TAG-RE) was published with a section on solar PV.
   - Information was compiled on solar PV as part of EPRI's renewable energy briefing materials, brochures, CD-ROM, and web site.
   - Guidelines were provided for identifying, planning, and implementing high-value PV systems, as well for interconnection with the grid.
   - EPRI representatives attended meetings of the Utility Photovoltaic Group to assist in planning and execution of the national PV Rooftop Initiative.
4. Biomass.
   - The EPRI Renewable Energy Technology Assessment Guide (TAG-RE) was published with a section on biomass.
   - Information was compiled on biomass as part of EPRI's renewable energy briefing materials, brochures, CD-ROM, and web site.
   - The Biomass Cofiring Applications Guide was produced.
   - EPRI monitored and reported on R&D and commercial products and programs that offer improvements in knowledge or performance of biomass crop and energy systems.

5. Tailored collaboration on biomass cofiring.
    - A report was published presenting the major cost and performance parameters of systems that enable natural gas to be augmented by 10% biomass fuel. The report provides estimates of the extra cost for the electricity to be generated from biomass.
    - Field test results were published from the Bailly and Seward demonstrations.

Project Status:
The Commission's participation in this target ended as of December 31, 2000.

REN Projects Completed in 1999

Photovoltaics

Contract #: 500-97-012 **Project #:** 11
Contractor: Edison Technology Solutions/Southern California Edison
Subcontractors: Utility PhotoVoltaic Group : United States Department of Energy : Emerging Renewables
Project Amount: $1,000,000
Contractor Project Manager: Steve Taylor (626) 815-0530
Commission Contract Manager: Jamie Patterson (916) 657-4819
Status: Completed

Project Description:
The purpose of this project was to operate and monitor twelve photovoltaic (PV) systems to evaluate their year-round system performance and efficiency. This evaluation was to document that photovoltaics are applicable on a wide scale to the typical building types located in the dense urban areas of Southern California.

This project supports the PIER Program objectives of:

- Improving the environmental and public health costs/risks of California's electricity by documenting the application of a clean electrical generation technology.
- Improving the reliability/quality of California's electricity because PV offers an attractive, environmentally benign renewable energy alternative for distributed electrical generation.

Proposed Outcomes:
Support Edison Technology Service's (ETS) Solar Neighborhood Program by helping to commercialize photovoltaic technology, educate and increase public awareness, and deploy photovoltaics into high-value, high-visibility applications by evaluating system performance and efficiency as compared to expected results, and evaluating the seasonal effects of year-round PV operations in California.

Actual Outcomes:
Properly designed and situated PV systems were shown to operate within 15 percent of their expected system efficiency specifications.

The seasonal effects of the various PV systems showed that with increasing panel temperatures, efficiencies decreased. Conversely, when the panels were cooler at the same irradiance level, system efficiency increased. Increasing daylight hours in the summer increased overall energy production. The decreased panel efficiency occasioned by increased summer temperatures was more than offset by longer daylight hours. Peak power reduction was offset by increased energy production.

Project Status:
The project has been completed.

Solar Two

Contract #: 500-97-012 **Project #:** 10
Contractor: Edison Technology Solutions/Southern California Edison
Project Amount: $1,200,000
Contractor Project Manager: Kon McQuiston (626) 815-0520
Commission Contract Manager: Alec F. Jenkins (916) 654-4597
Status: Completed

Project Description:
This project completes the testing and evaluation of the 10 MW Solar Two Central Receiver Project. Solar Two uses concentrated solar energy to produce steam for electric generation. It is a proof-of-concept power plant that demonstrates the practical combination of the solar central receiver concept and the use of molten salt as an efficient, nontoxic heat transfer and energy storage fluid. The central receive/molten salt design is presently the only practical technology for collecting and storing solar thermal energy for electric generation on demand, whether that demand is hours or days after the energy has been collected.

This project supports the PIER Program objectives of:

- Improving the reliability/quality of California's electricity by using a sustainable energy resource to diversify the State's electricity supply system.
- Improving the energy cost/value of California's electricity by overcoming the intermittent nature of traditional solar electric generation so that even base load power can be provided.
- Improving the environmental and public health costs/risks of California's electricity by using a zero emission generation technology with a nontoxic energy storage medium (molten salt).
- Improving the safety of California's electricity by using a nonflammable energy transfer fluid (molten salt).

Proposed Outcomes:

1. Test and validate the technical characteristics including performance of the nitrate salt receiver, energy storage system, and steam generator subsystems and generation dispatch capability.
2. Improve the accuracy of economic projections for commercial projects by increasing the database for capital, operating, and maintenance costs.
3. Document overall project results for use by public and private R&D programs and the solar industry to foster wider interest in commercial plants.

Actual Outcomes:

1. Completed all primary tests and data collection goals, including demonstrating full operational flexibility and successful operation of an advanced receiver panel technology.
2. Specific technical outcomes:
   - Gross turbine output as a function of heat input to the steam generator agreed well with design estimates.
   - The efficiency of the molten salt receiver agreed well with design predictions.
   - The energy storage subsystem fully met efficiency predictions.
   - Between July 1 and July 7, 1998, the plant demonstrated a key advantage of the molten salt central receiver by delivering 24 hour a day continuous solar-electric power to the grid (153 hours). The project has therefore demonstrated full dispatch capability.
3. Improved the accuracy of economic projections by obtaining actual performance data for use in scaling the design performance prediction model, Solergy.
4. Improved plant cost predictions by documenting refinements in operation and maintenance procedures and expected outcomes in cost and performance, as well as design and operational refinements to be incorporated in the subsystems for commercial plant.

5. SunLab (the solar thermal program collaboration between the National Renewable Energy Laboratory) is documenting the overall project results for use by public and private R&D programs and the solar industry to foster wider interest in commercial plants.

Project Status:
The project has been completed.

.

Environmentally-Preferred Advanced Generation (EPAG) Multi-Year Projects Started in 2005

Cost-Effective NOx Control for Stationary Diesel Engines, Phase II: Beta Field Demonstration

The Problem	1. There are about 5,900 stationary agricultural diesel engines in CA used to drive irrigation pumps. Agricultural engines have avoided emissions regulations through a permitting exemption in the Clean Air Act of 1990. SB 700 eliminates this exemption. This is pressuring diesel engine owners to electrify their pumps. The increased electricity demand could reach 1,400 MW, threatening the state's electricity reliability during peak demand summer afternoons. 2. There are nearly 20,000 back-up generators in California representing at least 3,800 MW of capacity. These could be used for peaking power and demand response programs, if they could meet emissions permitting regulations.
Proposed Research	Catalytica plans to integrate a CARB-certified Diesel Particulate Filter into its XEC-90 retrofit system; make improvements to the system to reduce NOx by 95%; fabricate and install the system on a third party, end user, 260 kW (350 hp) agricultural diesel engine in the San Joaquin Valley; and monitor emissions and fuel penalty for 1,000 operating hours.
Research Justification and Goals	Supports California's goal to promote clean, small generation resources located at load centers per the Energy Action Plan 2003; and to enable consumers and businesses to supply their own generation through the deployment of distributed generation and cogeneration per the Integrated Energy Policy Report 2003 by: • developing and demonstrating a cost effective retrofit for stationary diesel engines that reduces NOx emissions by 95% and particulate matter (PM) emissions by 85%. This project also addresses It emphasizes innovative energy supply and end use technologies, focusing on their reliability, affordability, and environmental attributes..
Contractor	Catalytica Energy Systems, Inc.
Site Location	Madera County, CA
PIER Manager	John Henry Beyer Ph.D.

This project is being conducted by the California Energy Commission's Public Interest Energy Research (PIER) program. PIER supports energy research and development that improves the quality of life in California by bringing environmentally safe, affordable, and reliable energy services and products to the marketplace.

Proof of Concept and Test Validation of a 25kW Dual Shell Stirling Engine

The Problem	Stirling engines are a 200-year old technology that have not been able to compete with the common Diesel and Otto cycle engine technologies. Only recently have commercial Stirling engine concepts been introduced. However, these implementations have not achieved the efficiencies, power density and durability required in engines for stationary electricity generation. The Stirling engine operates on the Carnot cycle, which is the most efficient cycle for a heat engine operating between a heat source and a heat sink.
Proposed Research	The purpose of this project is to bring ADI Thermal Power Corporation's Dual Shell Stirling engine to commercial readiness and to test its performance. The ADI engine has the potential to realize the potential of the Stirling engine concept with the high efficiency of a Carnot cycle engine. ADI Thermal Power has introduced a number of innovations in thermal energy transfer, differential pressure and temperature reductions, and materials selection and use. These innovations may lead to high electrical generation efficiencies, low wear, long maintenance intervals, no hydrogen losses, and low cost.
Research Results	The Contractor has used computer modeling and experimentation to improve materials selection, designs, and fabrication techniques to develop an engine whose performance will meet the goals of the contract.
Research Justification and Goals	Supports California's goal to meet new generation needs first by renewable energy resources and distributed generation per the Energy Action Plan 2003; and to promote clean, small generation resources located at load centers per the Energy Action Plan 2003 by: • Revolutionizing the distributed generation market with a 40+ percent efficient engine that meets California Air Resources Board 2007 emissions limitations.
Contractor	ADI Thermal Power Corporation
PIER Manager	Arthur J. Soinski Ph.D.

This project is being conducted by the California Energy Commission's Public Interest Energy Research (PIER) program. PIER supports energy research and development that improves the quality of life in California by bringing environmentally safe, affordable, and reliable energy services and products to the marketplace.

EPAG Active Projects from Previous Years

A 5 MW Zero-Emission Gas-Fired Power Plant

The Problem	The unique Clean Energy Systems (CES) technology could be a revolutionary power generation breakthrough. Public benefits could be substantial. Power plant air emissions would be negligible. Exhaust from the gas generator is steam (which is condensed and recycled) and CO2 (which can be sequestered or used commercially). If CO2 emissions are constrained or taxed in the future, a CES power plant would be more efficient than a modern gas-fired combined cycle power plant. CES-type power plants near oil fields could use the CO2 for enhanced oil recovery. With carbon sequestration, this would be a zero emission power plant.
Proposed Research	The purpose of this project is to demonstrate long-term reliability and durability of a unique fossil-fueled zero-emission power generation system based on rocket engine designs. For this demonstration project, a 20 megawatt (MW) (thermal) gas generator, developed and tested with Department of Energy (DOE) funding, will be operated for two years to produce electricity on the grid at a repowered 5 MW power plant near Bakersfield, California.
Research Results	The Clean Energy Systems (CES) demonstration power plant at Kimberlina (near Bakersfield, CA) exported 2 MW to the grid for the first time in March 2005. By mid October 2005, the CES gas generator had logged 576 hours total run time, with 34 hours of continuous operation. Most problems at the plant have been caused by conventional plant sub systems, not the gas generator. The length of continuous run times is increasing.
Research Justification and Goals	Supports California's goal to make progress in meeting the State's environmental goals and standards, including minimizing the energy sector's impact on climate change per the Energy Action Plan 2003; and to improve environmental quality while meeting the wide-ranging demand for energy per the Integrated Energy Policy Report 2003 by: • Demonstrating a fossil fuel electricity generation system with nearly zero emissions and cost effective CO2 separation for sequestration or enhanced oil recovery. • Demonstrating long term durability and reliability of the Clean Energy Systems (CES) combustion system ("gas generator") through non-stop operation and electricity generation. This project also addresses Emphasizes innovative energy supply and end use technologies, focusing on their reliability, affordability, and environmental attributes..
Contractor	Clean Energy Systems, Inc.
Site Location	Project work is being conducted at various locations throughout California.
PIER Manager	John Henry Beyer Ph.D.

This project is being conducted by the California Energy Commission's Public Interest Energy Research (PIER) program. PIER supports energy research and development that improves the quality of life in California by bringing environmentally safe, affordable, and reliable energy services and products to the marketplace.

A Proposal for an Ultra-Low Emissions System Development Project

The Problem	Reciprocating engines are often used in distributed generation (DG) but their high emissions, especially of nitrogen oxides (NOx), limit their use in California. Further, the current engine emission control technology cannot cost-effectively meet California's new, stringent DG emission standards. Advanced engine emission control strategies for natural gas-fueled engines need to be developed.
Proposed Research	The purpose of this project is to develop and demonstrate a natural gas-fueled, reciprocating engine system, with fuel reformation and emissions reduction technologies, that meets 2007 targets set by the PIER program's Advanced Reciprocating Internal Combustion Engines (ARICE) initiative. These targets include emissions limits, installed cost limits, and 20 percent improved efficiency. The developed engine system will provide electrical system reliability, emission reductions, and economic benefits to California ratepayers.
Research Results	Waukesha developed a Phase I engine using a stoichiometric air-fuel ratio, cooled exhaust gas recirculation (EGR), and a three-way catalyst system for nitrogen oxides (NOx) control. Limited testing achieved Phase I targets of 0.15 grams per brake horsepower-hour of NOx. The complete engine-generator set has not yet been tested. The Phase II system, planned to incorporate an onboard fuel reforming and enhanced EGR, was determined by Waukesha after preliminary development and testing to be cost-prohibitive; and has not been pursued further.
Research Justification and Goals	Supports California's goal to promote customer and utility owned distributed generation per the Energy Action Plan 2003; and to enable consumers and businesses to supply their own generation through the deployment of distributed generation and cogeneration per the Integrated Energy Policy Report 2003 by: • Attaining low emission targets for gas-fired reciprocating engines by developing a retrofit technology for rich burn engines already in operation. • Raising engine efficiency while lowering installation costs. This will reduce non-renewable fuel consumption and total emissions tonnage while lowering the cost of electricity to customers. • Capturing the high efficiency and extremely low emissions of lean burn engines equipped with expensive selective catalytic reduction (SCR) after-treatment. • Maintaining the excellent cost benefit ratios of rich burn engines using low-cost, readily available, three-way catalysts. • Increasing fuel-to-electric efficiency with no adverse affects on volatile organic compounds (VOCs) or particulate emissions. • Decreasing engine emissions by 90 percent. • Increasing rich burn engine efficiency by 20 percent. • Reducing installed cost of DG systems by 20 percent. • Maintaining engine durability at current levels. This project also addresses Senate Bill 1298 and emphasizes innovative energy supply and end use technologies, focusing on their reliability, affordability, and environmental attributes..
Publications	A Proposal for an Ultra-Low Emissions System Development Project
Contractor	Waukesha Engine, Dresser, Inc.

Site Location	Waukesha, WI
PIER Manager	Avtar Bining Ph.D.

This project is being conducted by the California Energy Commission's Public Interest Energy Research (PIER) program. PIER supports energy research and development that improves the quality of life in California by bringing environmentally safe, affordable, and reliable energy services and products to the marketplace.

Advanced Laser Ignition System Integrated ARICE Project (A Consortium of CEC's ARICE and USDOE's ARES Programs)

The Problem	In natural gas reciprocating engines used for distributed generation, optimum performance is limited by the capabilities of current ignition systems. High power and efficiency demand high compression ratios, and low emissions of nitrogen oxides (NOx) require lean fuel-air ratios. The resulting in-cylinder conditions are responsible for frequent ignition system maintenance, and operation of the engines at about 20% below optimum performance levels. Laser Based Ignition (LBI) is a promising technology that could overcome these limitations if developed for natural gas fired reciprocating engines.
Proposed Research	The purpose of this project is to develop a Laser Based Ignition (LBI) system for natural gas fired reciprocating engines. Design parameters will be determined through experimental studies. The information will be used to develop the components required for an Advanced Laser Ignition System (ALIS). Finally, an integrated ALIS-ARICE (Advanced Reciprocating Internal Combustion Engine program) natural gas engine will be tested and its performance assessed. Following the assessment, production and commercialization plans will be formalized.
Research Results	Testing of the laser ignition system in a combustion chamber, rapid compression machine and in a single cylinder internal combustion engine has been completed. The results demonstrated the potential of laser ignition to reduce emissions and improve engine performance. Development of an Advanced Laser Ignition System is underway and it will be tested on a multi-cylinder natural gas engine in 2006.
Research Justification and Goals	Supports California's goal to promote customer and utility owned distributed generation per the Energy Action Plan 2003; and to enable consumers and businesses to supply their own generation through the deployment of distributed generation and cogeneration per the Integrated Energy Policy Report 2003 by: • Reducing emissions and improving the performance (efficiency, power density, durability and reliability) of natural gas fired internal combustion engines. This project also addresses Senate Bill 1298 and emphasizes innovative energy supply and end use technologies, focusing on their reliability, affordability, and environmental attributes..
Publications	Advanced Laser Ignition System Integrated ARICE Project (A Consortium of CEC's ARICE and USDOE's ARES Programs)
Contractor	Argonne National Laboratory
Site Location	Argonne, IL
PIER Manager	Avtar Bining Ph.D.

This project is being conducted by the California Energy Commission's Public Interest Energy Research (PIER) program. PIER supports energy research and development that improves the quality of life in California by bringing environmentally safe, affordable, and reliable energy services and products to the marketplace.

An Integrated Distributed Power System Using a PEM Fuel Cell and an Autothermal Cyclic Reformer

The Problem	An inexpensive and efficient natural gas reformer to provide hydrogen for fuel cells and other distributed generation or transportation applications needs to be developed. A promising technology is the autothermal cyclic reformer (ACR) in which the heat required for the endothermic natural gas reforming reaction is obtained through exothermic oxidation of a nickel-based catalyst. The process can produce clean hydrogen gas with less than 10 parts per million of carbon monoxide. This makes it suitable for proton exchange membrane (PEM) fuel cells.
Proposed Research	The purpose of this project is to develop a pre-commercial prototype for an autothermal cyclic reformer (ACR) -based fuel processor and to integrate the fuel processor with a proton exchange membrane (PEM) fuel cell. GE-Global Research (earlier GE Energy and Environmental Research) will design, optimize and validate a reliable and safe integrated distributed power system based on an ACR. The clean hydrogen product stream will be used to fuel a PEM fuel cell.
Research Results	GE-Global Research has developed and rig-tested an autothermal cyclic reformer (ACR) (shift reactor/preferential oxidation reactor) capable of reforming natural gas to produce hydrogen. The skid-mounted prototype reformer is integrated with two 5-kilowatt proton exchange membrane (PEM) fuel cells and is being tested at the National Fuel Cell Research Center in Irvine, California.
Research Justification and Goals	Supports California's goal to promote customer and utility owned distributed generation per the Energy Action Plan 2003; and to enable consumers and businesses to supply their own generation through the deployment of distributed generation and cogeneration per the Integrated Energy Policy Report 2003 by: • Developing a PEM fuel cell and ACR based distributed power generation technology that is cost-effective. • Targeting a capital cost of less than $1,200 per kilowatt for a PEM fuel cell and fuel processor, when more than 5,000 units per year are manufactured. This project also addresses Senate Bill 1298 and emphasizes innovative energy supply and end use technologies, focusing on their reliability, affordability, and environmental attributes..
Publications	An Integrated Distributed Power System Using a PEM Fuel Cell and an Autothermal Cyclic Reformer
Contractor	GE Global Research
Site Location	Irvine, CA
PIER Manager	Avtar Bining Ph.D.

This project is being conducted by the California Energy Commission's Public Interest Energy Research (PIER) program. PIER supports energy research and development that improves the quality of life in California by bringing environmentally safe, affordable, and reliable energy services and products to the marketplace.

Catalytic Combustion Retrofit of a Gas Turbine at Sonoma Development Center

The Problem	Environmental concerns have prevented conventional gas turbines from being used in urban areas as an alternative to increasing transmission capacity (more wires and substations) from large central power plants to end users. The Xonon® catalytic combustor potentially addressed the environmental concerns and enabled high end user efficiency through combined heat and power (CHP) operation. A demonstration of the long term reliability, environmental performance, and operations and maintenance costs was necessary to demonstrate the commercial viability of the Xonon technology.
Proposed Research	The purpose of this demonstration project is to retrofit a 1.4 megawatt Kawasaki gas turbine at the Sonoma Developmental Center in Eldridge, California, with the Catalytica Energy Systems Xonon® catalytic combustor, to reduce nitrogen oxides (NOx) emissions from 30 parts per million (ppm) to less than 2.5 ppm. This project is the first commercial demonstration of the Xonon® catalytic combustor developed, in part, with prior PIER funding. Waste heat from the gas turbine is used to produce steam for heating and cooking at the 120-building campus. This combined heat and power (CHP) mode of operation greatly improves system efficiency.
Research Results	The Xonon-equipped turbine has been a operating since January 2003 with NOx emissions generally below 3 ppm, and usually below 2.4 ppm. Before conversion to the Xonon combustion system, NOx emissions were approximately 30 ppm for a similar 1.4 MW Kawasaki gas turbine. Maintenance outages were mostly for components other than the Xonon combustion system. Catalyst life in the Xonon module is very good - well in excess of one year.

Research Justification and Goals	Supports California's goal to promote clean, small generation resources located at load centers per the Energy Action Plan 2003; and to promote customer and utility owned distributed generation per the Energy Action Plan 2003 by:
	• Promoting customer and utility owned distributed generation per the Energy Action Plan 2003
	  - My Error, Sorry.
	  - Eliminating the use of toxic chemicals for exhaust gas clean-up for distributed generation to meet the mandated California emissions levels.
	  - Reducing NOx pollution by five times that of conventional low NOx systems.
	  - Alleviating transmission congestion in California.
	  - Providing a less expensive alternative to increasing power transmission from California's central power plants for meeting increased local power needs
	• Eliminating the use of toxic chemicals for exhaust gas clean-up for distributed generation to meet the mandated California emissions levels.
	• Reducing NOx pollution to one-fifth that of a conventional low NOx systems.
	• Alleviating transmission congestion in California.
	• Providing a less expensive alternative to increasing power transmission from California's central power plants for meeting increased local power needs.
	
	This project also addresses in the Warren Alquist Act: an emphasis on innovative energy supply and end use technologies, focusing on their reliability, affordability, and environmental attributes..

Publications	Xonon Low-NOx Catalytic Combustion in Practice: Case Study of 1,400 kW Kawasaki Combustion Turbine at the Sonoma Developmental Center ==>http://www.epri.com
Contractor	California Department of Developmental Services

Site Location	Eldridge, CA
PIER Manager	John Henry Beyer Ph.D.

This project is being conducted by the California Energy Commission's Public Interest Energy Research (PIER) program. PIER supports energy research and development that improves the quality of life in California by bringing environmentally safe, affordable, and reliable energy services and products to the marketplace.

Catalytic Combustor-Fired Industrial Gas Turbine

The Problem	Catalytic combustion and new burner designs have demonstrated the ability to reduce gas turbine emissions of nitrous oxides (NOx) from their current levels (9 to 25 parts per million by volume [ppmv]) to sub-3 ppmv levels, without the use of water or steam injection, or the use of post-combustion NOx reduction. However, these beneficial technologies are being used on very few commercial gas turbines because each turbine requires a custom design and because ultra-low emissions are required only in California.
Proposed Research	The purpose of this project is for Solar Turbines Inc. to develop a combustion technology for its Taurus 70, 7.5 megawatt, industrial gas turbine that will result in NOx emissions of less than 3 ppmv. Solar Turbines will adapt the catalytic combustion technology of Catalytica Energy Systems, Inc. to the Taurus 70 to test emissions, performance, and evaluate costs for a commercial product. If appropriate, the project work statement allows Solar to switch to the ultra-low NOx technology of a company other than Catalytica.
Research Results	Solar Turbines tested Catalytica's catalytic combustion system in a test cell for the Taurus 70 gas turbine and achieved exceptionally low NOx emissions. However, Solar decided that the Catalytica system was not a good match with Solar's annular combustion system, and would be too expensive for Solar's Taurus 70 market. As a result, Solar will conduct engine tests with an ultra low NOx burner that has been developed by Alzeta Corporation under another PIER contract.
Research Justification and Goals	Supports California's goal to promote clean, small generation resources located at load centers per the Energy Action Plan 2003; and to enable consumers and businesses to supply their own generation through the deployment of distributed generation and cogeneration per the Integrated Energy Policy Report 2003 by: • Incorporating pollution prevention for gas turbines that is less costly and more effective at reducing emissions than post combustion clean-up using selective catalytic reduction (SCR). • Eliminating harmful pollutants and allowing gas turbines to be used in distributed generation and CHP applications. This project also addresses Emphasizes innovative energy supply and end use technologies, focusing on their reliability, affordability, and environmental attributes..
Contractor	Solar Turbines Incorporated
Site Location	San Diego, CA & San Diego, CA
PIER Manager	John Henry Beyer Ph.D.

This project is being conducted by the California Energy Commission's Public Interest Energy Research (PIER) program. PIER supports energy research and development that improves the quality of life in California by bringing environmentally safe, affordable, and reliable energy services and products to the marketplace.

Demonstration and Testing of Microturbine Generators (UCI - APEP)

The Problem	Stakeholder groups have identified the questionable reliability and accuracy of distributed generation (DG) performance characteristics as a barrier to greater market adoption. The various developers, manufacturers, and testing facilities were using different testing methods, units, and terms to describe the performance of various technologies. Inter-technology and intra-technology performance comparisons are difficult because of the lack of commonality in testing and reporting methods.
Proposed Research	The purpose of this project is to develop standardized performance testing and reporting procedures or protocols for microturbine generators (MTGs). Standardized protocols will be developed for heat rate or fuel-to-electricity conversion efficiency, atmospheric and acoustic emissions, and power quality.
Research Results	Technical work was completed in 2003. Performance testing and reporting protocols for MTGs have been developed, peer reviewed, and widely distributed in electronic and hard copies. They will be published as an appendix to the Final Report. A Final Report that incorporates PIER contract manager comments has been submitted. The project results have been transferred to a joint US Department of Energy/multi-state collaborative of ASERTTI (the Association of State Energy Research and Technology Transfer Institutions), which is developing nationally-accepted performance testing, and reporting protocols for microturbines, small turbines and reciprocating engines, in both electricity-only and combined heat and power applications.
Research Justification and Goals	Supports California's goal to meet new generation needs first by renewable energy resources and distributed generation per the Energy Action Plan 2003; and to standardize and increase the evaluation and monitoring of energy efficiency programs to ensure that savings and benefits are being delivered.per the Integrated Energy Policy Report 2003 by: • Establish and use a stakeholder group to identify appropriate parameters for inclusion among the testing protocols and to review project deliverables. • Develop a set of prescriptive testing and reporting methodologies that will result in uniform testing and reporting of MTG operation under specified operating conditions. • Accelerate the market penetration of MTGs by providing common methods for performance testing and reporting of test results.
Contractor	University of California, Irvine
Site Location	Irvine, CA
PIER Manager	Arthur J. Soinski Ph.D.

This project is being conducted by the California Energy Commission's Public Interest Energy Research (PIER) program. PIER supports energy research and development that improves the quality of life in California by bringing environmentally safe, affordable, and reliable energy services and products to the marketplace.

Development of a Partial Oxidation Gas Turbine for Combined Electricity and Hydrogen-Enriched Fuel Gas Production

The Problem	Gas turbines normally operate in a lean fuel mode to minimize emissions, and have efficiencies of 25-35%. In combined cycle applications and combined heat and power (CHP) applications, the waste heat is recovered to achieve system efficiencies of 45-70%. In this novel approach, the gas turbine operates fuel rich to provide exhaust gas that becomes the fuel for an industrial application that would otherwise require natural gas to be burned under high pressure, high temperature conditions. This has the potential for higher system efficiency with low emissions. Research is necessary to develop, test and demonstrate this technology.
Proposed Research	The purpose of this project is to develop and demonstrate an ultra-high efficiency, low emissions, cost-competitive partial-oxidation gas turbine (POGT) for combined electricity generation and high-temperature hydrogen-enriched fuel gas production. The exhaust from the POGT has high temperature, pressure and energy content, and is to be used as the fuel for an industrial furnace, boiler, or fuel cell. The complete CHP system is expected to have exceptionally high efficiency – up to 88% – with very low emissions of nitrogen oxides (NOx) and carbon monoxide.
Research Results	At this time the partial oxidation reactor has been manufactured and is undergoing testing before being installed on the 200 kWe turbine.
Research Justification and Goals	Supports California's goal to optimize energy conservation and resource efficiency per the Energy Action Plan 2003; and to promote clean, small generation resources located at load centers per the Energy Action Plan 2003 by: • Demonstrating an industrial end user, distributed generation, CHP system with very high efficiency. • Developing a novel approach to use small turbines for on-site low-cost electric power generation that can be readily integrated with existing utility and industrial thermal processes. • Demonstrating the POGT system's capability to significantly reduce nitrogen oxides (NOx) and carbon dioxide (CO2) emissions associated with gas-fired turbine-based power generation and existing industrial thermal processes. This project also addresses as specified in the Warren-Alquist Act, it emphasizes innovative energy supply and end use technologies, focusing on their reliability, affordability, and environmental attributes..
Contractor	Gas Technology Institute
Site Location	Project work is being conducted at various locations throughout California.
PIER Manager	John Henry Beyer Ph.D.

This project is being conducted by the California Energy Commission's Public Interest Energy Research (PIER) program. PIER supports energy research and development that improves the quality of life in California by bringing environmentally safe, affordable, and reliable energy services and products to the marketplace.

Development of Steady-State Analytical Tools for Fuel Cells (UCI - NFCRC)

The Problem	Computer models that simulate the operation of fuel cells are not available in the public domain. The availability of such models would decrease the need to physically test fuel cell systems, especially under conditions that might be experienced during operation but that have the potential to damage fuel cell components. Such tools would also decrease the need for physical testing and would facilitate more robust designs for fuel cell systems.
Proposed Research	The purpose of this project is to develop steady state computer simulation modules and analysis strategies for fuel cell and fuel cell/turbine hybrid systems and cycles. Simulation modules for higher temperature fuel cells (namely, solid oxide and molten carbonate fuel cells, and associated balance of plant components for fuel cell and fuel cell/turbine hybrid systems) will be developed and integrated into a computer code. This project is a continuation of work started under a previous PIER Contract #500-98-052.
Research Results	The modules have been integrated into a computer code named Advanced Power Systems Analysis Tools (APSAT). The technical work for this project was essentially complete in 2003. The Draft Final Report was resubmitted mid-2005. Many of the fuel cell materials properties, cell dimensions and cell designs are fixed and cannot be changed by outside users. As a result, APSAT will be most useful to universities in general and the University of California, Irvine in particular.
Research Justification and Goals	Supports California's goal to meet new generation needs first by renewable energy resources and distributed generation per the Energy Action Plan 2003; and to enable consumers and businesses to supply their own generation through the deployment of distributed generation and cogeneration per the Integrated Energy Policy Report 2003 by: • Developing a publicly-available computer code that incorporates a fundamental understanding of the processes and features of fuel cell systems. • Predicting system performance and the effects of system design and operational changes on system performance. • Enabling manufacturers to determine how to construct fuel cell and hybrid systems in order to reduce cost and complexity while retaining reliability.
Contractor	University of California, Irvine
Site Location	Irvine, CA
PIER Manager	Arthur J. Soinski Ph.D.

This project is being conducted by the California Energy Commission's Public Interest Energy Research (PIER) program. PIER supports energy research and development that improves the quality of life in California by bringing environmentally safe, affordable, and reliable energy services and products to the marketplace.

Dynamic Modeling of Fuel Cells and Hybrid Systems (UCI - NFCRC)

The Problem	The dynamic performance and performance tradeoffs of fuel cell and fuel cell/hybrid systems are not well understood. The development of modeling packages is needed that have both accurate and predictive capabilities when modeling solid oxide fuel cell (SOFC), molten carbonate fuel cell (MCFC), fuel reformer, and balance of plant (BOP) system components.
Proposed Research	The purpose of this project is to develop computer simulation modules to describe the dynamic operation of fuel cell and fuel cell hybrid electricity generating systems. Modules will be developed that describe the dynamic operation of a solid oxide fuel cell, a molten carbonate fuel cell, a gas turbine engine, a fuel reformer, and the balance of plant for a fuel cell/turbine system. Dynamic or transient operation includes system start-up and shutdown, electric load following, a change in fuel flow, composition, temperature or pressure, a change in gas turbine inlet and outlet conditions, and a change in turbine rotation speed.
Research Results	The simulation modules are complete, model validation is under way, and the computer model is being applied to various fuel cell and fuel cell hybrid system configurations. Model validation is occurring in part with data obtained on a 220 kilowatt (kW) solid oxide fuel cell/microturbine hybrid system that was partially funded under PIER Contract #500-97-012, Project #7.
Research Justification and Goals	Supports California's goal to meet new generation needs first by renewable energy resources and distributed generation per the Energy Action Plan 2003; and to enable consumers and businesses to supply their own generation through the deployment of distributed generation and cogeneration per the Integrated Energy Policy Report 2003 by: • Developing a publicly-available computer simulation model that accurately describes the performance of a fuel cell or hybrid system during transient operating conditions. • Substituting a model for physical testing that will be especially useful as a substitute for testing under conditions that could damage system components. • Using a model to screen hybrid system designs, probe the operating space of system configurations, evaluate impacts of component changes, and analyze operating problems.
Contractor	University of California, Irvine
Site Location	Irvine, CA
PIER Manager	Arthur J. Soinski Ph.D.

This project is being conducted by the California Energy Commission's Public Interest Energy Research (PIER) program. PIER supports energy research and development that improves the quality of life in California by bringing environmentally safe, affordable, and reliable energy services and products to the marketplace.

Engine CHP Integrated Cooling and Heating Module Development

The Problem	Engineering and installation costs for combined cooling, heating and power (CCHP) systems are largely independent of system size. As a result, CCHP systems for small and medium-sized applications (200 – 800 kilowatts) are frequently not cost effective. In addition, absorption cooling has a reputation for poor reliability and maintainability and is not configured for effective utilization of engine heat.
Proposed Research	The purpose of this project is to develop a standardized, factory-assembled heating and absorption chiller with an engine heat management system that is cost optimized for CCHP performance, reliability, and maintainability. The product will be an 80-ton absorption-based heating and cooling system interfaced with BluePoint Energy's 260 kilowatt ultra-low emission reciprocating engine system.
Research Results	A standardized, factory-assembled CCHP system, cost optimized for system performance, reliability, and maintainability, has been developed and lab tested. It incorporates a heating/cooling module, absorption chiller, and BluePoint Energy's 260 kW ultra-low emission reciprocating engine with a heat management system. A field test and demonstration is underway, and will be completed in 2006-2007.
Research Justification and Goals	Supports California's goal to promote customer and utility owned distributed generation per the Energy Action Plan 2003; and to enable consumers and businesses to supply their own generation through the deployment of distributed generation and cogeneration per the Integrated Energy Policy Report 2003 by: • Reducing the installed cost of CCHP systems for commercial and light industrial applications by developing and demonstrating a standardized module. • Enabling widespread implementation of CCHP in California's commercial and light industrial sectors. - Relieving pressure for new central station capacity and transmission lines, and increasing power quality/reliability for the CHP adopters. This project also addresses Senate Bill 1298 and emphasizes innovative energy supply and end use technologies, focusing on their reliability, affordability, and environmental attributes..
Publications	Engine CHP Integrated Cooling and Heating Module Development
Contractor	D. E. Solutions
Site Location	Encinitas, CA
PIER Manager	Terry Thompson

This project is being conducted by the California Energy Commission's Public Interest Energy Research (PIER) program. PIER supports energy research and development that improves the quality of life in California by bringing environmentally safe, affordable, and reliable energy services and products to the marketplace.

High Efficiency Ultra-Low NOx Supplemental Firing Burner

The Problem	This project will develop and demonstrate a new type of supplemental firing burner for combined heat and power (CHP) applications that meets emissions limits without stack exhaust gas treatment. The new duct burner will provide a system efficiency that approaches that of standard industrial boilers, while also matching its nitrogen oxides (NOx) and carbon monoxide (CO) emissions with emissions levels of the best available control technology (BACT) for boilers in California.
Proposed Research	In a common industrial gas turbine or reciprocating engine system configuration, supplemental firing is the addition of heat to the exhaust gas by means of a burner before the exhaust gas enters a heat recovery steam generator (HRSG). Supplemental firing can improve HRSG operating flexibility, provide higher thermal efficiency, and increase the steam-to-power ratio of this combined heat and power (CHP) system. However, adding a duct burner to a CHP system can also require costly treatment of the stack exhaust gas to meet emission limits.
Research Results	The prototype and pilot scale burners have been designed, developed, and tested. Preliminary results have achieved low nitrogen oxides (NOx) levels. The results will be used to design, build and field test a low-NOx burner providing supplemental heat in the gas turbine exhaust for a combined heat and power applications.
Research Justification and Goals	Supports California's goal to promote customer and utility owned distributed generation per the Energy Action Plan 2003; and to enable consumers and businesses to supply their own generation through the deployment of distributed generation and cogeneration per the Integrated Energy Policy Report 2003 by: • Significantly improving the cost effectiveness of cogenerating electricity and steam at industrial and large commercial facilities. This project also addresses Senate Bill 1298 and emphasizes innovative energy supply and end use technologies, focusing on their reliability, affordability, and environmental attributes..
Publications	High Efficiency Ultra-Low NOx Supplemental Firing Burner
Contractor	Alzeta Corporation
Site Location	Santa Clara, CA
PIER Manager	Avtar Bining Ph.D.

This project is being conducted by the California Energy Commission's Public Interest Energy Research (PIER) program. PIER supports energy research and development that improves the quality of life in California by bringing environmentally safe, affordable, and reliable energy services and products to the marketplace.

Integrated Gas Handling System for Renewable Fuel Simulation

The Problem	A system is needed that will provide California manufacturers with a controlled operating environment to assess the capabilities of distributed generation (DG) systems running on alternative fuels.
Proposed Research	The purpose of this project is to design and build a Gas Handling System which will accurately produce synthetic gaseous mixtures that mimic the composition of alternative fuels such as landfill gas and sewage digester gas. The synthetic fuel will be used in a laboratory to assess the capabilities of distributed generation systems operating on alternative fuels.
Research Results	The Gas Handling control system design and the component specifications have been completed; The complete system has undergone performance testing.
Research Justification and Goals	Supports California's goal to diversify fuels and fuel sources of petroleum and natural gas with alternative fuels and renewable energy per the Integrated Energy Policy Report 2003 by: • Developing a gas handling system with the capability of simulating various gaseous fuel compositions, including those from renewable and industrial sources. • Delivering gaseous mixtures containing, but not limited to, natural gas (as delivered), nitrogen, carbon dioxide, carbon monoxide, and hydrogen.
Contractor	The Regents of the University of California - Irvine
Site Location	Irvine, CA
PIER Manager	Arthur J. Soinski Ph.D.

This project is being conducted by the California Energy Commission's Public Interest Energy Research (PIER) program. PIER supports energy research and development that improves the quality of life in California by bringing environmentally safe, affordable, and reliable energy services and products to the marketplace.

Jet Mixing in Rich-Quench-Lean Combustors

The Problem	The rich-burn/quick-mix/lean-burn (RQL) technology, developed historically for aero propulsion, is of interest for the generation of electricity from stationary gas turbines because it has the potential to produce fewer pollutants and to be more robust in operation than conventional lean premixed combustion systems. The adoption of RQL low nitrogen oxides (NOx) and low carbon monoxide (CO) combustors will facilitate the siting of gas turbines in California without the need for post-combustion emission reduction controls.
Proposed Research	The purpose of this project is to obtain fundamental understanding of rich-burn/quick-mix/lean-burn (RQL) combustion, an advanced strategy to minimize the formation and emission of criteria pollutants from gas turbine engines. Successful RQL combustion requires controlled mixing of the fuel-rich gases coming from the rich-burn section with air jets in the combustor's quick-mix section. The Contractor is performing experimental studies of jet mixing at the high-temperature high-pressure combustion conditions found in gas turbines.
Research Results	The project has been completed with the exception of the Fiinal Report. A test rig, including a fuel ignitor and sampling probes, for operation at elevated pressures has been fabricated. The stability limits of the RQL reaction were mapped and the operational limits of the facility were defined. A high-pressure capability able to address nitrogen-containing biomass and coal gas fuels for which RQL technology is expected to be especially effective has been built. The mixing and reaction research provides the data and the mechanistic insights into the combustion process that are needed to guide the design of rich-burn/quick-mix/lean-burn (RQL) systems.
Research Justification and Goals	Supports California's goal to promote clean, small generation resources located at load centers per the Energy Action Plan 2003 by: • Determining the effects of temperature, pressure, and air-to-fuel ratio on nitrogen oxides (NOx) and carbon monoxide (CO) production during rich-burn/quick-mix/lean-burn reactions. • Defining the set of conditions favorable for clean operation in the RQL.
Contractor	University of California, Irvine
Site Location	Irvine, CA
PIER Manager	Arthur J. Soinski Ph.D.

This project is being conducted by the California Energy Commission's Public Interest Energy Research (PIER) program. PIER supports energy research and development that improves the quality of life in California by bringing environmentally safe, affordable, and reliable energy services and products to the marketplace.

Low Cost, High Efficiency, Ultra-Low NOx ARICE Solution Using HCCI Combustion

The Problem	Natural gas-fueled reciprocating internal combustion engines are often used in distributed generation, but they produce high emissions, particularly of nitrogen oxides (NOx). A technique called homogenous charge compression ignition (HCCI) shows promise for reducing emissions. Combustion is initiated from the compression of a homogenous charge of pre-mixed fuel and air. The peak combustion temperature is relatively low, thus reducing NOx emissions. A successful natural gas-fueled HCCI engine needs to be developed and demonstrated.
Proposed Research	The purpose of this project is to develop an engine-generator set that uses a homogenous charge compression ignition (HCCI) system and operate the engine-generator set to demonstrate low nitrogen oxides (NOx) emissions and high fuel-to-electricity efficiency. If successful, this project will demonstrate a reciprocating engine technology that is the best distributed generation solution (in terms of emissions, efficiency, and cost) for the below-5-megawatt market.
Research Results	An engine-generator set that uses a homogenous charge compression ignition (HCCI) system has been developed and limited testing has been performed. Low NOx emissions and high efficiency are yet to be demonstrated.
Research Justification and Goals	Supports California's goal to promote customer and utility owned distributed generation per the Energy Action Plan 2003; and to enable consumers and businesses to choose an alternative energy provider per the Integrated Energy Policy Report 2003 by: • Developing an engine-generator set that uses a homogenous charge compression ignition (HCCI) system. • Reducing electricity generation emissions. • Providing products and choices to California consumers for near-term distributed (DG) applications. This project also addresses Senate Bill 1298 and emphasizes innovative energy supply and end use technologies, focusing on their reliability, affordability, and environmental attributes..
Publications	Low Cost, High Efficiency, Ultra-Low NOx ARICE Solution Using HCCI Combustion
Contractor	Lawrence Livermore National Laboratory
Site Location	Livermore, CA
PIER Manager	Avtar Bining Ph.D.

This project is being conducted by the California Energy Commission's Public Interest Energy Research (PIER) program. PIER supports energy research and development that improves the quality of life in California by bringing environmentally safe, affordable, and reliable energy services and products to the marketplace.

Low NOx - Low CO MTG Combustor

The Problem	The widespread commercialization of distributed generation (DG) technologies in the state of California may be limited because of their emission of criteria pollutants such as nitrogen oxides (NOx) and carbon monoxide (CO).
Proposed Research	The purpose of this project is to achieve the emissions performance of state-of-the-art central station power plants in a distributed generation (DG) system. The contractor will develop and demonstrate a retrofit combustor in a Capstone iCHP 60 kW microturbine that will use optical feedback for the system controls.
Research Results	Experimental and modeling studies have been conducted to determine the effects of air/fuel mixing, air/fuel ratios, and modified injectors on emissions levels. A Capstone iCHP 60 MTG has been successfully commissioned. The contractor has finalized the combustor design. It will consist of six variable geometry injector/actuator assemblies that respond to fiber optic emissions sensors. The fiber optic emissions sensors are ready for testing in the full combustor test rig, and one of six variable geometry injectors has been fabricated.
Research Justification and Goals	Supports California's goal to promote clean, small generation resources located at load centers per the Energy Action Plan 2003 by: • Developing a MTG that emits nitrogen oxides (NOx) less than 3 parts per million by volume (ppmv) and carbon monoxide (CO) less than 10 ppmv. • Limiting the incremental price increase to less than 20% greater than that of standard designs.
Contractor	The Regents of the University of California - Irvine
Site Location	Irvine, CA
PIER Manager	Arthur J. Soinski Ph.D.

This project is being conducted by the California Energy Commission's Public Interest Energy Research (PIER) program. PIER supports energy research and development that improves the quality of life in California by bringing environmentally safe, affordable, and reliable energy services and products to the marketplace.

MTG Combustion System Capable of Operating on Medium and Low Btu Gas and Liquid Fuels

The Problem	There is currently no commercially viable fuel flexible microturbine generator (MTG) combustion system. The development of such a system would allow buyers of distributed generators to be assured of having power when needed with the use of non-renewable fuels while being able to use renewable fuels when available.
Proposed Research	The purpose of this project is to develop and demonstrate a fuel flexible microturbine generator (MTG) combustion system that exhibits low emissions and minimal impact on rated efficiency while operating on either natural gas, medium-Btu content gas (e.g., digester gas), low-Btu content gas (e.g., bio-gas), or liquid fuel (e.g., diesel). The project will 1) identify the critical production processes and estimated cost associated with producing a commercially viable, alternatively fueled MTG, 2) test a Capstone microturbine from partial to full load using four different fuels, and 3) provide the emissions and efficiency results in a publicly-available database.
Research Results	The initial injector design and fabrication stages have been completed for MTG operation on medium-Btu gas, liquid fuel, and low-Btu gas. The baseline performance of MTGs on natural gas has been established. MTG testing on medium-BTU gas has been completed. The emissions targets were not achieved. Fabrication of a second generation low-emission medium-BTU injector is underway. UCI has started to test the operation of MTGs using liquid fuel and low-BTU gas.
Research Justification and Goals	Supports California's goal to diversify fuels and fuel sources of petroleum and natural gas with alternative fuels and renewable energy per the Integrated Energy Policy Report 2003 by: • Developing and demonstrating MTG combustion systems capable of operating on (1) medium-BTU content gas, (2) low-BTU content gas, and (3) liquid fuel. • Achieving emission target levels of: - <10 ppmv nitrogen oxides (NOx) and carbon monoxide (CO) from 50-100% load on medium-BTU and low-BTU fuels for a range of gas compositions. - <10 ppmv NOx and CO emissions from 50-100% load on liquid fuels.
Publications	C.D. Bolszo, J.L. Mauzey, V.G. McDonell, S. Nakamura. "Experimental Investigation of Liquid Fuel Atomization, Mixing and Pollutant Emissions for a 30 kW Gas Turbine Engine," ILASS Americas, 18th Ann., Liquid Atomization, May 2005. M.W. Effinger, J.L. Mauzey, and V.G. McDonell. "Investigation of Pollutant Emissions from a Gas Turbine Operated on Diluted Natural Gas," Submitted and presented at the Forth Joint States Meeting of the Combustion Institute.
Contractor	The Regents of the University of California - Irvine
Site Location	Irvine, CA
PIER Manager	Arthur J. Soinski Ph.D.

This project is being conducted by the California Energy Commission's Public Interest Energy Research (PIER) program. PIER supports energy research and development that improves the quality of life in California by bringing environmentally safe, affordable, and reliable energy services and products to the marketplace.

Multi-Fueled 10-100 kW Solid Oxide Fuel Cell Power Module

The Problem	Fuel cells are one of the most attractive electricity generating options for California because of their low atmospheric emissions. Solid oxide fuel cell (SOFC) power plants have the potential for widespread adoption if the thermal, mechanical, electrochemical and manufacturing issues can be resolved at competitive costs.
Proposed Research	The purpose of this project is to develop the experimental and design bases for an integrated, commercially viable solid oxide fuel cell (SOFC) stack to be incorporated in a distributed generation system. The emphases will be on fuel cell performance improvements and on thermal management by means of radiant heat transfer from the hot (>650 degree Celsius) stack to heat exchangers for air preheating with a reduction in the volume of cooling air required.
Research Results	The project is complete, with the exception of the Final Report. Higher efficiency, higher power density, and improved operational flexibility were achieved by means of radiant air preheaters. Three 1-3 kW stacks were fabricated and tested. The conceptual design and cost estimates for a 10 kW system with an efficiency greater than 50 percent were prepared. The estimated capital cost for the balance of plant is $866/watt at a production volume of 50,000 units per year, which is twice as high as needed for a competitive product. One conclusion is that specialty components need to be developed.
Research Justification and Goals	Supports California's goal to promote clean, small generation resources located at load centers per the Energy Action Plan 2003; and to meet new generation needs first by renewable energy resources and distributed generation per the Energy Action Plan 2003 by: • Obtaining a stack power density of at least 0.4 watt per square centimeter (W/cm^2) at 0.8 volts and 650 degrees Celcius. • Verifying a 3D stack model's ability to accurately predict stack performance. • Achieving power degradation of <0.6% per 1000 hrs.
Contractor	Gas Technology Institute
Site Location	Des Plaines, IL
PIER Manager	Arthur J. Soinski Ph.D.

This project is being conducted by the California Energy Commission's Public Interest Energy Research (PIER) program. PIER supports energy research and development that improves the quality of life in California by bringing environmentally safe, affordable, and reliable energy services and products to the marketplace.

Power Generation Integrated in Burners for Packaged Industrial/Commercial Boilers

The Problem	The efficiency and power output of simple cycle gas turbines can be improved by using a recuperator (a heat exchanger) to recover some of the heat in the gas turbine exhaust and transferring that heat to the combustion air. Combined heat and power (CHP) is a possible alternative to a recuperator for recovering waste heat, especially for gas turbines smaller than 1 megawatt (MW) that currently requires further development to make it a practical alternative.
Proposed Research	This purpose of this project is to develop, demonstrate and introduce a novel, complete, packaged combined heat and power (CHP) system matched to existing thermal loads in order to provide a low-cost, clean, and efficient system for distributed generation (DG). The CHP system consists of a gas turbine for electricity generation and a boiler (steam generator) with a low NOx burner. The heat in the gas turbine exhaust contributes to incremental steam generation above that contributed by the boiler burner.
Research Results	A new industrial burner assembly has been designed and is being built and tested. Preliminary results indicate the potential to reduce cost and minimize space requirements. The full assembly will be developed and demonstrated with a microturbine generator in a combined heat and power (CHP) application in 2006-2007.
Research Justification and Goals	Supports California's goal to promote customer and utility owned distributed generation per the Energy Action Plan 2003; and to enable consumers and businesses to supply their own generation through the deployment of distributed generation and cogeneration per the Integrated Energy Policy Report 2003 by: • Developing, demonstrating and introducing a novel packaged combined heat and power (CHP) system that will match existing thermal loads. • Providing a low-cost, clean, and efficient approach to distributed generation (DG). • Adding a simple and low-maintenance microturbine generator to an industrial boiler. This project also addresses Senate Bill 1298 and emphasizes innovative energy supply and end use technologies, focusing on their reliability, affordability, and environmental attributes..
Publications	Power Generation Integrated in Burners for Packaged Industrial/Commercial Boilers
Contractor	CMC-Engineering
Site Location	Sunnyvale, CA
PIER Manager	Avtar Bining Ph.D.

This project is being conducted by the California Energy Commission's Public Interest Energy Research (PIER) program. PIER supports energy research and development that improves the quality of life in California by bringing environmentally safe, affordable, and reliable energy services and products to the marketplace.

Premium Power for Small CHP Systems

The Problem	A significant reason that small combined heat and power (CHP) engine-generator packages have not been developed to meet the potential market demand is the limitations of induction-based generator technology. Induction systems are generally not capable of black start (powering up power stations after a blackout), have little grid-isolated capability, and often need capacitors to prevent power factor degradation. California's Rule 21 has caused custom-designed CHP systems to have high costs for engineering, permitting, utility interface, grid interconnection, and retrofit installation. A CHP package that integrates an inverter-based generator with an engine system would provide important benefits, but has not yet been developed.
Proposed Research	The purpose of this project is to develop and integrate an inverter-based generator technology into the Tecogen CHP engine system to remove current limitations and market barriers to distributed generation and CHP applications.
Research Results	An inverter-based generator has been developed and is being lab tested. Its integration into the Tecogen combined heat and power (CHP) engine system and demonstration of the complete CHP system will occur in 2006-2007.
Research Justification and Goals	Supports California's goal to promote customer and utility owned distributed generation per the Energy Action Plan 2003; and to enable consumers and businesses to supply their own generation through the deployment of distributed generation and cogeneration per the Integrated Energy Policy Report 2003 by: • Providing an enhanced combined heat and power product to the California market at a reduced capitol cost and higher part-load efficiency. This project also addresses Senate Bill 1298 and emphasizes innovative energy supply and end use technologies, focusing on their reliability, affordability, and environmental attributes..
Publications	Premium Power for Small CHP Systems
Contractor	Tecogen, Inc.
Site Location	Waltham, MA
PIER Manager	Avtar Bining Ph.D.

This project is being conducted by the California Energy Commission's Public Interest Energy Research (PIER) program. PIER supports energy research and development that improves the quality of life in California by bringing environmentally safe, affordable, and reliable energy services and products to the marketplace.

Ultra-Low NOx Combustion System for a 13.5 MW Gas Turbine Generator

The Problem	Gas turbine generators typically have high nitrogen oxide (NOx) emissions. A gas turbine's ability to reduce NOx emissions is currently dependent on either dry low NOx combustors or selective catalytic reduction systems. A new promising technology developed by Alzeta Corporation offers the possibility of NOx emission reductions greater than those achieved with current technology at a competitive price. Research is needed to address design and manufacturing issues that prevent commercial production of this technology.
Proposed Research	This project will develop ultra-low emissions combustion control for industrial gas turbine engines (e.g., Solar Turbines' Titan 130 or Taurus 70). This project fits into a continuum of ultra-low emissions developments in previous PIER contracts with Alzeta (Contracts #500-97-031 & 500-00-004). The work includes combustor materials and manufacturing development, lab testing, engine testing, and field demonstration of the low NOx gas turbine combustor system.
Research Results	Alzeta developed their nanoStar combustor technology for industrial gas turbines and tested it on a full-scale combustor test rig. They achieved the technical performance goals of ultra-low nitrogen oxide (NOx), carbon monoxide (CO) and unburned hydrocarbons (UHC) emissions. A full engine test on a gas turbine will be conducted as part of a follow-on project with Solar Turbines Incorporated.
Research Justification and Goals	Supports California's goal to promote customer and utility owned distributed generation per the Energy Action Plan 2003; and to enable consumers and businesses to supply their own generation through the deployment of distributed generation and cogeneration per the Integrated Energy Policy Report 2003 by: • Increasing distributed generation capacity in California without sacrificing air quality. • Accelerating development of an ultra-low NOx combustion system. • Reducing the capital cost of ultra-low NOx gas turbines and providing competitive technology for ultra- low emissions. This project also addresses Senate Bill 1298 and emphasizes innovative energy supply and end use technologies, focusing on their reliability, affordability, and environmental attributes..
Publications	Ultra-Low Nox Combustion System for a 13.5 MW Gas Turbine Gnerator
Contractor	Alzeta Corporation
Site Location	Santa Clara, CA
PIER Manager	Avtar Bining Ph.D.

This project is being conducted by the California Energy Commission's Public Interest Energy Research (PIER) program. PIER supports energy research and development that improves the quality of life in California by bringing environmentally safe, affordable, and reliable energy services and products to the marketplace.

EPAG Projects Completed in 2005

Demonstration of a Low Emission Advanced Vortex Combustor

The Problem	Novel gas turbine technologies that have the prospect of providing reliable, low-cost, low-emissions power include the Advanced Vortex Combustor concept coupled with the Ramgen engine cycle. With the Advanced Vortex Combustor, nitrogen oxides (NOx) emissions for the Ramgen cycle and other gas turbines could be reduced to regulated levels without the added expense and environmental hazards of exhaust after-treatment. Additionally, the Advanced Vortex Combustor is projected to provide fuel-flexibility so that unconventional fuels like biomass, land fill gas, and sub-quality gas reserves can be utilized.
Proposed Research	The purpose of this project is to demonstrate an Advanced Vortex Combustor that produces 3 parts per million by volume (ppmv) or less of NOx emissions without after-treatment. This achievement would be a significant advancement in combustion technology applicable to many types of gas turbine engines. The joint partnership between NETL and Ramgen Power Systems (RPS) in this effort is advantageous, since it couples the fundamental knowledge gained from this effort with a commercial gas turbine entity. RPS views the Advance Vortex Combustor as an essential part of their commercial engine designs.
Research Results	Developed and demonstrated an Advanced Vortex Combustor for a gas turbine that produces 3 ppmv or less of NOx emissions without expensive after-treatment alternatives for emission control.
Research Justification and Goals	Supports California's goal to promote customer and utility owned distributed generation per the Energy Action Plan 2003; and to enable consumers and businesses to supply their own generation through the deployment of distributed generation and cogeneration per the Integrated Energy Policy Report 2003 by: • Jump-starting distributed generation. • Achieving less than 3 ppm NOx. • Providing an affordable, reliable alternative to upgrading or expanding the grid in California. • Advancing the following: - Distributed Generation. - Increased use of industrial waste gases to generate electricity. - Increased use of quality gas resources and land fill methane. - Hybrid turbine fuel cell systems. This project also addresses Senate Bill 1298 and emphasizes innovative energy supply and end use technologies, focusing on their reliability, affordability, and environmental attributes..
Publications	Demonstration of a Low-emission Advanced Vortex Combustor
Contractor	National Energy Technology Laboratory
Site Location	Morgantown, WV
PIER Manager	Avtar Bining Ph.D.

This project is being conducted by the California Energy Commission's Public Interest Energy Research (PIER) program. PIER supports energy research and development that improves the quality of life in California by bringing environmentally safe, affordable, and reliable energy services and products to the marketplace.

Development of a Cost Effective NOx Reduction Retrofit for Stationary Diesel Engines

The Problem	Diesel engine emissions are constraining their use in otherwise appropriate applications. A cost-effective retrofit system for stationary diesel engines that reduces nitrogen oxide (NOx) emissions has the potential to: 1) mitigate severe air pollution problems in the Central Valley of California from 5,900 diesel-powered water pumps, without electrification of the pumps (electrification would require costly power line extensions to remote locations and up to 1,400 MW of additional generation capacity), and 2) allow backup Diesel generators to be operated cleanly for peaking power and demand response programs.
Proposed Research	The purpose of this project is to develop and test a retrofit for stationary diesel engines that will reduce NOx emissions by at least 90%. Catalytica Energy Systems, Inc. (CESI) will develop a new NOx control solution, called the XEC-90, that incorporates a NOx trap catalyst, a fuel processor that converts diesel fuel into agents that regenerate the NOx trap, and associated engine control systems. For this, the first phase of the development, CESI will design, fabricate and test a prototype of the XEC-90 system, install it on an 8.3 liter Cummins engine, and perform a 100-hour durability test.
Research Results	The project was completed successfully and demonstrated a NOx reduction of 92% over the duration of the 100-hour test, which included several engine stops and starts. In a follow-on project, CESI will continue development of the retrofit system to increase NOx reduction, reduce particulate matter (PM) emissions, and test the system on a stationary agricultural diesel engine in the Central Valley.
Research Justification and Goals	Supports California's goal to promote clean, small generation resources located at load centers per the Energy Action Plan 2003; and to strengthen its energy infrastructure per the Integrated Energy Policy Report 2003 by: • Demonstrating a diesel engine retrofit system to reduce NOx emissions by at least 90%. This project also addresses SB 700 (Florez), which essentially eliminates the permit exemption for agricultural sources of air pollution, with district air board implementation dates at the end of 2005 and 2006..
Publications	Demonstration of a NOx Control System for Stationary Diesel Engines ==>http://www.energy.ca.gov/reports/reports_500.htm
Contractor	Catalytica Energy Systems, Inc.
PIER Manager	John Henry Beyer Ph.D.

This project is being conducted by the California Energy Commission's Public Interest Energy Research (PIER) program. PIER supports energy research and development that improves the quality of life in California by bringing environmentally safe, affordable, and reliable energy services and products to the marketplace.

Low NOx GT Combustor

The Problem	A gas turbine's ability to reduce NOx emissions is currently dependent on either dry low NOx combustors or selective catalytic reduction systems. A new promising technology developed by Alzeta Corporation offers the possibility of NOx emission reductions greater than those achieved with current technology at a competitive price. Research is needed to address design and manufacturing issues that prevent commercial production of Alzeta's technology.
Proposed Research	This project continues the development of Alzeta's Low-NOx surface stabilized combustion technology to build monolithic injectors for application in industrial- and micro-scale gas turbine engines. Development will include formulation of improved monolithic injector designs and manufacturing methods, rig testing of the improved monolithic injector in micro- and industrial-scales, and full engine testing.
Research Results	Improved monolithic injector designs and manufacturing methods were developed and an industrial-scale injector was successfully rig tested. The results of this project have been used in the follow up project with Alzeta to develop and demonstrate a full-scale combustor using nanoStar technology for an industrial gas turbine. The full engine test will also be conducted as part of this follow-on project. The microturbine part of this project was not conducted due to Honeywell's decision not to pursue microturbine development.
Research Justification and Goals	Supports California's goal to promote clean, small generation resources located at load centers per the Energy Action Plan 2003; and to enable consumers and businesses to supply their own generation through the deployment of distributed generation and cogeneration per the Integrated Energy Policy Report 2003 by: • Eliminating harmful emissions and enabling gas turbines to be used for distributed generation. • Advancing a low NOx technology that provides better emissions performance than existing dry low NOx combustors and selective catalytic reduction systems. This project also addresses Senate Bill 1298 and emphasizes innovative energy supply and end use technologies, focusing on their reliability, affordability, and environmental attributes..
Publications	Low NOx GT Combustor
Contractor	Alzeta Corporation
Site Location	Santa Clara, CA
PIER Manager	Avtar Bining Ph.D.

This project is being conducted by the California Energy Commission's Public Interest Energy Research (PIER) program. PIER supports energy research and development that improves the quality of life in California by bringing environmentally safe, affordable, and reliable energy services and products to the marketplace.

Xonon Ultra-Low Combustion in Small Multican Turbines

The Problem	PIER has supported development of Catalytica's catalytic combustion system (called "Xonon") for single-combustor turbines, which has been successfully integrated with a 1.4 MW gas turbine manufactured by Kawasaki. A Xonon equipped turbine has been operating at the Sonoma Developmental Center for three years with NOx emissions below 3 ppm. This project will expand the application of this technology to a much broader market that includes multi-combustor turbines.
Proposed Research	The purpose of this project is to develop a gas turbine combustion system that is economically preferred over all other options for achieving exhaust nitrogen oxides (NOx) levels below 3 parts per million (ppm) in a small multi-combustor gas turbines, without the need for exhaust gas cleanup devices. The combustion system will be operated on a commercially available turbine.
Research Results	Catalytica made improvements in its Xonon technology: 1) Xonon module size was reduced to make modules more amenable for multi combustor turbines, 2) catalyst manufacturing processes were improved to increase yield and reduce cost, and 3) Xonon system performance was made more efficient. However, because of current energy market conditions, Catalytica was unable to find a manufacturer of multi combustor turbines willing to become a project partner and continue development and testing on one of their turbines. As a result, the project has been terminated prior to the engine field demonstration phase.
Research Justification and Goals	Supports California's goal to promote clean, small generation resources located at load centers per the Energy Action Plan 2003; and to enable consumers and businesses to supply their own generation through the deployment of distributed generation and cogeneration per the Integrated Energy Policy Report 2003 by: • Enabling attainment of emissions levels below current regulatory limits, without the need for exhaust cleanup systems, which are more costly and potentially hazardous. • Preventing the production of pollutants in gas turbine exhaust, rather than relying on exhaust cleanup. This project also addresses Emphasizes innovative energy supply and end use technologies, focusing on their reliability, affordability, and environmental attributes..
Publications	Xonon Ultra Low-NOx Combustion Applied to Multi-Combustor Gas Turbines ==>http://www.energy.ca.gov/pier/final_project_reports/CEC-500-2005-174.html#ExecutiveSummar
Contractor	Catalytica Energy Systems, Inc.
Site Location	Mountain View, CA & Gilbert, AZ
PIER Manager	John Henry Beyer Ph.D.

This project is being conducted by the California Energy Commission's Public Interest Energy Research (PIER) program. PIER supports energy research and development that improves the quality of life in California by bringing environmentally safe, affordable, and reliable energy services and products to the marketplace.

EPAG Projects Completed in 2004

Distributed Energy Resources (EPRI Program #101)

Contract #: 500-02-028 **Project #:** 19
Contractor: Electric Power Research Institute (EPRI)
Project Amount: $117,435
Contractor Project Manager: David Thimsen (650) 855-2548
Commission Contract Manager: Arthur J. Soinski Ph.D. (916) 654-4674
Status: Completed

Project Description:
This project provides financial and operational analysis of distributed resource (DR) applications. Distributed resources are small generation (1 kilowatt (kW) to 50 megawatt (MW)) and/or energy storage devices typically sited near customer loads or at distribution and sub-transmission substations. Distributed resources provide grid, system, or customer benefits such as electricity supply reliability, standby generation, peak shaving, combined heat-and-power (CHP), prime power, premium power, or renewable power.

The distributed resource technologies considered were fuel cells, internal combustion engines, small gas turbines, microturbines, and energy storage systems. Topics considered were Integration of DR into the power infrastructure, DR applications, and DR markets and customer needs.

The focus during 2004 was on the use of biogas and opportunity fuels, packaged combined heat and power systems, and the ability of DR generating technologies to meet California Air Resources Board 2003 and proposed 2007 atmospheric emissions limits.

Proposed Outcomes:
1. Produce seven Strategic Intelligence Updates.
2. Update the database of DR technologies, which is available on the internet at:
   ⇒ www.disgen.com
3. Perform a fuel cell technology development update and benchmarking of small fuel cell companies.
4. Perform a technology assessment of residential power generators.
5. Perform a technology assessment of the emerging low emission DER technologies.
6. Produce a technical update on mobile generation technologies.

Actual Outcomes:
1. Produced eight Strategic Intelligence Updates called, Strategic Intelligence Update: Technology Development, Vol. 5, No. 1-8: Emerging Distributed Generation Technologies and Infrastructure. Available on the web at:
   ⇒ www.epri.com/.
2. DR Web Technology Database Updates. EPRI Product #s E215151; 1008429; 1011485.
3. Fuel Cell Technology Development Update and Benchmarking of small fuel cell companies. EPRI Product ID #s 1008432; 1011471; 1011472; 1011464.
4. Technology assessment completed. Residential Combined Heat and Power Systems. ERRI Product ID #1011485.
5. Technology assessment of emerging low emission DR technologies. Planned for 3/31/2005. EPRI Product ID #1011341.
6. Technical update on mobile generation technologies. Planned for 3/31/2005.
7. Reciprocating Engines and Combustion Turbines: EPRI Product ID # 1011486.
8. 101.018 Microturbines and Stirling Engines. EPRI Product ID# 1008430.

Project Status:
The project was completed in December 2004.

EPAG Projects Completed in 2003

Catalytic Combustor - Fired Industrial Gas Turbine for Distributed Power & Cogeneration Applications

Contract #: 500-98-041
Contractor: Solar Turbines Incorporated
Subcontractors: Catalytica Energy Systems, Inc.
Contract Amount: $814,543
Match Amount: $773,391
Contractor Project Manager: Kenneth Smith (619) 544-5539
Commission Contract Manager: John Henry Beyer Ph.D. (916) 654-4609
Status: Completed

Project Description:
The primary goal of this project, a joint effort between Solar Turbines Incorporated and Catalytica Energy Systems, Inc. (CESI), was to select the preferred conceptual design of a catalytic combustion system for a natural gas-fired industrial gas turbine. Catalytic combustion has demonstrated the ability to reduce gas turbine NO_x emissions from their current levels (9 to 25 ppmv) to sub-3 ppmv levels (@ 15% O_2), without the use of water or steam injection, or the use of any post-combustion NO_x reduction. The industrial gas turbine originally selected for this project was the 5.2 MW Taurus 60, but was later changed to the 7.5 MW Taurus 70, a new Solar product deemed to have better market potential for the catalytic technology. This project was the first of three phases of development. Subsequent phases – conducting hot testing of the combustor assembly and actual operation on a gas turbine – are continuing under PIER Contract #500-01-045.

This project supported the PIER Program objectives of:

- Improving the reliability and quality of California's electricity by eliminating harmful pollutants and allowing these gas turbines, to be used in distributed generation applications.
- Improving the energy cost/value of California's electricity by introducing industrial gas turbines with catalytic combustion, rather than the higher-cost option of post-combustion treatment systems such as selective catalytic reduction (SCR).
- Improving the environment and public health cost/risks of California's electricity by incorporating pollution prevention that is potentially more effective at reducing NO_x and CO emissions than post combustion pollution clean-up.

Proposed Outcomes:

1. Bring to market readiness, a catalytic combustion system that is cost competitive with other commercially available NO_x reduction technologies for industrial scale gas turbines.
2. Develop and then integrate the optimum preburner, premixer, catalytic core and burn out zone liner designs into the Taurus 70 gas turbine.
3. Implement a control system strategy for the catalytic combustion system capable of handling start-up, shutdown, load following, and full load loss without damage to the combustor or gas turbine.
4. Produce a commercial product that provides cost effective NO_x control that meets permitting requirements in the most restrictive air quality districts.
5. Reduce the capital cost of NO_x control for the Taurus 70 gas turbine by 80% compared with exhaust cleanup using SCR. This will result from completion of this three-phase project.

In its efforts to develop a catalytic combustion system for its Taurus 60, and more recently Taurus 70, industrial gas turbines, Solar has delivered a final report for this contract describing progress in developing the necessary component technologies and engineering designs for the pre-burner, fuel-air premixer, catalytic core, burnout zone liner, engine hardware, and control system. Solar has also written a preliminary production readiness plan.

Project Status:
This project was terminated ahead of schedule due to changes in the direction of Solar's research efforts. As a result, there were minor scope reductions in some tasks, and one task concerning experimental evaluation of combined premixer and pre-burner performance was not undertaken. A final project report (P500-03-045) dated April 2003 describing the R&D work accomplished was submitted to the Commission. Solar is building upon all of the knowledge gained in this contract and is continuing these efforts to implement ultra low emissions technology in its Taurus 70 gas turbine in a follow-on Commission contract (#500-01-045) entitled *Catalytic Combustor-Fired Industrial Gas Turbine*.

DER Technologies Assessment and Databases

Contract #: 500-02-028 **Project #:** 7
Contractor: Electric Power Research Institute (EPRI)
Project Amount: $49,000
Contractor Project Manager: Dan Rastler (650) 855-2521
Commission Contract Manager: Arthur J. Soinski Ph.D. (916) 654-4674
Status: Completed

Project Description:
This project provides financial and operational analysis of distributed resource (DR) applications. Distributed resources are small generation (1kW to 50MW) and/or energy storage devices typically sited near customer loads or distribution and sub-transmission substations. Distributed Resources provide grid, system, or customer benefits, such as standby generation, peak shaving, combined heat-and-power (CHP), prime power, premium power, or renewable power.

Distributed Resource technologies and topics included in this work:

- DR generating technologies such as fuel cells, internal combustion engines, small gas turbines, energy storage, and microturbines.
- Integration of DR into the power infrastructure.
- DR applications.
- DR markets and customer needs.

The focus during this year was on the use of biogas and opportunity fuels, packaged combined heat and power systems, and the ability of DR technologies to meet California Air Resources Board 2003 and proposed 2007 atmospheric emissions limits.

Proposed Outcome:

1. An updated database of DR technologies, which is available on the internet at: www.disgen.com.

Actual Outcomes:

1. Strategic Intelligence Update: Technology Development, Emerging Distributed Generation Technologies and Infrastructure, September 2003, EPRI Product #1009120.
2. Strategic Intelligence Update: Technology Development, Emerging Distributed Generation Technologies and Infrastructure, October 2003, EPRI Product #1009121.
3. Strategic Intelligence Update: Technology Development, Emerging Distributed Generation Technologies and Infrastructure, November 2003, EPRI Product #1009122.
4. DR Web Technology Database Updates: In progress, Completion expected March 31, 2004, EPRI Product #1005010.

Project Status:
The Commission's participation in this project ended December 31, 2003

EPAG Projects Completed in 2002

75-kW MCFC Power Plant Verification Test Project

Contract #: 500-97-039
Contractor: M-C Power Corporation
Subcontractors: San Diego Gas and Electric Company : Bechtel National, Inc. : Alternative Energy Systems Consulting, Inc. : Stewart and Stevensen
Contract Amount: $1,000,000
Match Amount: $1,956,841
Contractor Project Manager: Thomas Benjamin (630) 986-8040
Commission Contract Manager: Avtar Bining Ph.D. (916) 657-2002
Status: Completed

Project Description:
The purpose of this project was to demonstrate the energy-producing performance of advanced design molten carbonate fuel cell (MCFC) stack components in a 75 kW electric power generator. The test was conducted at an existing test facility at Marine Corps Air Station Miramar in San Diego. Based on information from a prior Miramar test and small-scale factory tests, advances in fuel cell components and stack design have been identified. A new 75 kW stack incorporating the advanced technology was installed at Miramar for testing.

This project supports the PIER Program objectives of:

- Improving environmental and public health costs/risk of California's electricity by developing an efficient electric generating technology that emits negligible levels of ozone and smog precursor pollutants and reduced levels of carbon dioxide.
- Improving the reliability/quality of California's electricity by demonstrating fuel cell technology for distributed generation applications.

Proposed Outcomes:

1. Verify the long-term current density performance of M-C Power's most advanced stack design in full size cells under field conditions.
2. Evaluate the effect of anode recycle on generator performance.
3. Gather operating data upon which to base the design of future commercial prototype generators.
4. Achieve a 50-80 percent higher efficiency than conventional combustion-type generators.

Actual Outcomes:

1. M-C Power, Inc. successfully completed nearly 5 months of testing of its integrated, pressurized molten carbonate fuel cell (MCFC) power plant technology.
2. The MCFC power plant operated for about 3,300 hours and generated 250 MWh of electricity. The power system generation consistently exceeded the 75 kW rating throughout the test period.
3. Nitrogen oxide emission levels were below 0.4 ppm, which verified significant environmental benefits of MCFC technology.
4. System performance exceeded expectations and provided valuable design and operating information that is essential for the design of a commercial unit.

Project Status:
The project has been completed.

A Novel Steam Reforming Reactor for Fuel Cell Distributed Power Generation

Contract #: 500-97-038
Contractor: Energy and Environmental Research Corporation
Subcontractors: Phillips Petroleum Company
Contract Amount: $349,852
Match Amount: $303,458
Contractor Project Manager: Jerald Cole (714) 859-8851
Commission Contract Manager: Arthur J. Soinski Ph.D. (916) 654-4674
Status: Completed

Project Description:
The purpose of this project was to further develop a novel steam reforming process to convert natural gas to a hydrogen-containing mixture on a small scale. There are two novel aspects of the patented technology. First, the reformer and its catalyst are heated internal, thereby eliminating the need for an external furnace. Second, a carbon dioxide absorber is mixed with the reforming catalyst. This improves product gas quality, improves thermodynamic efficiency, and reduces the cost of the reformer. The intended market for the reformer is as the hydrogen source for a residential proton exchange membrane fuel cell (PEMFC).

This project supports the PIER Program objectives of:
- Improving the reliability/quality, improving the environmental and public health costs/risks.
- Improving the energy cost/value of California's electricity by advancing the use of low-emission, low-cost, distributed resource fuel cell technologies.

Proposed Outcomes:
1. Extending the catalyst and absorber life (greater than 5,000 hour).
2. Hydrogen production volume exceeding 25,000 cubic feet per day.
3. 75-85 percent conversion efficiency of fuel to hydrogen.
4. Low atmospheric emissions (especially important because the fuel cell stack itself has negligible emissions).
5. Cost targets that would make PEMFCs competitive with centralized power generation.

Actual Outcomes:
1. A catalyst with a projected lifetime greater than 4,350 hours was developed.
2. The catalyst exceeded the 50 percent utilization goal by 22 percent.
3. Only one carbon dioxide absorber, commercial dolomite, was identified as being suitable.
4. Some of the technical objectives were not achieved because the pilot reformer had insufficient steam production (steam is needed in the reforming reaction) and inadequate reactant preheating.
5. Engineering analyses suggest that the project objectives can be achieved with further development efforts.

Project Status:
Project is complete.

Advanced Fuel Cells

Contract #: 500-00-022 **Project #:** 2
Contractor: Gas Technology Institute
Project Amount: $102,500
Match Amount: $2,050,000
Contractor Project Manager: Kevin Krist (847) 768-0793
Commission Contract Manager: Arthur J. Soinski Ph.D. (916) 654-4674
Status: Completed

Project Description:
The purpose of this project is to develop low-cost, very efficient, planar solid oxide fuel cells (SOFCs), operating at 650 – 800 ^{o}C (1,112 ^{o}F – 1,472 ^{o}F). The overall project includes the following activities:

- GTI Project # 30799: *SOFC Component Development, System Design, and Product Definition* – Project is developing small SOFC for a range of residential, commercial, and gas-utility applications. Involves advanced components and materials, and the design, assembly, and proof of feasibility testing of prototypes. Fuel is initially reformed externally and unit is air-cooled. GTI is working with Versa Power Systems.
- GTI Project # 30755 and 40823: *RTESP SOFC System Definition Study* – A limited, 2-year activity involving exploratory R&D on alternative system designs. Conducted by GTI and supported with GTI and CEC Advanced Fuel Cell Membership funds.
- GTI Project # 40492: *Design, Construction, and Operation of a Power Module for High Efficiency, Low-Cost, Multi-Fueled 1-3 kW Solid Oxide Fuel Cell* – Development of a 1-3 kW sub-scale module that employs (1) radiant heat transfer to reduce airflow, increase efficiency and reduce cost and (2) stack that operates near 650 ^{o}C on multiple fuels. Module consists of a stack, air pre-heater panel, and burner. Fuel is internally reformed.
- *Low-cost, efficient, planar SOFC operating at 650 ^{o}C* – Component and system development with Versa Power and University of Pennsylvania.

The goal of this project is to provide a low-cost, clean, efficient fuel cell technology for GTI member companies, the public, and government and other entities requiring effective distributed power generation.

This project supports the PIER Program objectives of:

- Improving the energy cost/value of California's electricity by helping further developments within the fuel cell industry lead to overall lower costs of fuel cells.
- Improving the environment, public health and safety by developing an energy-producing technology that has negligible emissions and waste stream.
- Improving California's electrical system's reliability/quality/sufficiency by developing a clean distributed energy resource.
- Strengthening the California economy by helping California become a world leader in developing and using fuel cell technology.
- Providing greater choices for California consumers to both generate and consume electricity.

Proposed Outcomes:

1. A manufacturable, cost-effective, reliable, fuel cell stack technology capable of high power density in the operating temperature range of 650 - 800°C that meets the following criteria:
   - Operates for between 10,000 and 40,000 hours under steady-state, "always-on" conditions.
   - Operates with a to-be-determined number of thermal and load cycles.
   - Operates with stacks that are "gas-tight", exhibiting voltage degradation rates <0.5% per thousand hours of operation.
   - Operates with a to-be-determined multi-fuel capability, but probably including natural gas, hydrogen, and methanol. Oxidation of other fuels, including dry hydrocarbons, will be investigated.
2. Development and implementation of 2- and 3-dimensional models for predicting stack performance.
3. Development and implementation of stack-model-integrated, system design models.
4. Development of a system design for market entry products that are aimed at acceptable cost and high reliability in small production volumes. Generation efficiencies can be relatively low, but attractive for the applications envisioned.
5. Development of a system design that is targeted at low-cost and high efficiency in larger production volumes through the use of improvements in heat and flow management and internal reforming.
6. Development of 1-3 kW prototypes exhibiting the characteristics listed above.

Actual Outcomes:

1. GTI Contract # 40492**:** *Module for High Efficiency, Low Cost, Multi-Fueled 1-3 kW Solid Oxide Fuel Cell*—Completed:
   - Modeling of radiant air pre-heating in the sub-scale module.
   - Experimental confirmation of radiant air pre-heating effect.
   - Initial stack flow mal distribution analysis.
   - Initial stack spatial temperature distribution analysis.
   - Effect of flow pattern on temperature distribution.
   - Design of facility for testing sub-scale module (To be installed in 2003).
2. GTI Contract # 30799: *SOFC Component Development, System Design, and Product Definition* – Completed:
   - Initial design of a 500W unit.
   - Fabricated and tested system components including reformer, burner, and hot. assembly shell component.
   - Completed initial stack flow mal distribution analysis.
   - Initial flow and temperature distribution analysis.
   - Initial testing of hot module unit minus the stack.
3. *Low-cost, efficient, planar SOFC operating at 650 ^{o}C* – Completed:
   - Tested internally manifolded stacks up to 400W. Operated small, 2"x2" stacks up to 0.7W/cm^2 for 300 hr with thermal cycling and minimal voltage loss. Operated small stacks on hydrogen, neat methanol, ethanol/water, and reformate. Scaled stacks up from 2"x2" to 4"x4". Shifted focus to new flat-plate stack design that is easier to fabricate and has improved sealing efficiency. Key stack design and metallic interconnect patents issued.
   - Operated copper-based, anode-supported cells on dry CH_4, C_4H_{10}, decane, C_7H_8, and synthetic diesel with reduced tendency for carbon deposition. Results have implications for operating fuel cells directly on liquid hydrocarbons, but the research is still at a very early stage. GTI and the University of Pennsylvania have submitted patent applications and some claims have issued. A GTI venture partner has formed a development company, Franklin Fuel Cells that is now conducting a technology development program.
4. GTI Contracts #40823 & 30755: *RTESP SOFC System Definition Study* – Completed:

- Phase I: Identified early-entry markets with attractive financial, reliability and emissions-reduction characteristics. Defined initial fuel cell products – a 500W, stand-alone power supply providing continuous power and a 2-3 kW power supply capable of limited thermal cycling. Designed and modeled two initial SOFC systems using HYSYS (commercial process-design software). The system design was extended to a number of different process cases.
- Phase II: Evaluated a stack design concept involving radiant heat transfer and low airflow.
- Determined limits to the use of radiant heat transfer for reducing excess air needed for thermal management.
- Developed an analytical expression for the maximum air temperature increase resulting from stack radiation. Applied the evaluation to a sample 1060 W case that utilized low airflow. Showed that stack radiation – instead of excess airflow - can produce the majority of the required air pre-heating. Established a framework for determining the need for a pre-burner to supplement radiant air pre-heating.
- **Extended the analysis to consider the effect heat loss to the surroundings and stack size has on the heat available for air preheating. The heat available for air pre-heating declines sharply in smaller units when using expected amounts of heat loss to the surroundings.**
- **Completed the final report.**

Project Status:
The project has been completed.

Distributed Generation

Contract #: 500-00-022 **Project #:** 3
Contractor: Gas Technology Institute
Project Amount: $178,500
Match Amount: $3,570,000
Contractor Project Manager: John Kelly (847) 768-0665
Commission Contract Manager: Arthur J. Soinski Ph.D. (916) 654-4674
Status: Completed

Project Description:
The purpose of this project is to identify the application characteristics and technical requirements for the strategic utilization of gas-fired distributed generation beyond the electric distribution substation, near the point of use. The overall project includes the following activities:

- Distributed Energy Research (DER) Technology Research.
- Distributed Energy Technology Center (DETC).
- DETC – Building Cooling and Heating and Power (BCHP).

The goal of this project is to facilitate the development of distributed energy products for a wide range of residential and commercial sector applications.

This project supports the PIER Program objective of:

- Improved reliability of electric supply system and the quality of delivered electricity.

Proposed Outcomes:

1. Construction and startup of the GTI DETC in Des Plaines, Illinois.
2. Testing of advanced technology distributed generation systems, focusing on microturbines and reciprocating engines.

Actual Outcomes:

1. DER Technology Research.
   - DG Reliability software has been completed and sent to Energy Nexus. Oak Ridge National Laboratory is using this software in support of the Laboratory's effort to create a reliability database.
   - Sustainable Urban Energy Design research and development work was started in March 2002. This program is a comprehensive look at developing a national model for sustainable urban design for 2100, with a goal of minimal or no emissions of greenhouse gases from the city.
     - Initiated the San Diego Urban Design Program with a press release and a conference in that City with representatives from GTI, Sempra, the Mayor of San Diego, various regional supporters, and a representative from the Mexican government. This is part of an international competition.
     - This is now an ongoing GTI Research Collaboration project, with participation by the Energy Commission, San Diego Regional Energy Office, Sempra, City of Philadelphia, Gas Company of Hawaii, municipal gas companies, and others.
2. DETC (New 3,000-kW Lab).
   - Construction of the DETC was completed. The facility successfully underwent shakedown tests and is now operational.
   - The Caterpillar and Cummings reciprocating engines to be housed in this facility were received and are operational.
   - The first engine tested was for the Chicago Museum of Science and Industry, a Cummins, 1750 kW engine. Testing is complete and the unit was shipped back to the Museum.

- The Turbec microturbine unit was installed and tested in the new lab. Overall, the Turbec unit worked very well.
- GTI has received the Capstone 60 kW microturbine and intends to install and test this unit at the DETC during the first quarter of 2003.

3. DETC – BCHP Systems.
   - Preparation work for the testing of a Capstone 30 kW – Takuma Chiller performance test was completed. The unit is now in the second-generation design phase.

Project Status:
The project has been completed.

Durability of Catalytic Combustion Systems

Contract #: 500-97-033
Contractor: Catalytica Combustion Systems, Inc.
Contract Amount: $1,316,303
Match Amount: $3,290,846
Contractor Project Manager: Tom Morjig (650) 940-6371
Commission Contract Manager: Avtar Bining Ph.D. (916) 657-2002
Status: Completed

Project Description:
The purpose of this project is to conduct the research and development necessary to advance catalytic combustion technology for on-engine field testing in a 1.5 MW Kawasaki (KHI) gas turbine engine. The technology must have demonstrated high durability and reliability for fast market acceptance. To accomplish this goal, Catalytica will operate the currently developed Kawasaki combustor in a power generation facility for 8000 hours (1 year). In addition, Catalytica will continue to develop the technologies necessary to achieve commercial level of durability and reliability for the KHI combustor and catalyst module.

Once reliability has been demonstrated, the Kawasaki combustor will be moved to commercial sites for field-testing. Finally, the Kawasaki combustor will be offered as a commercial product and begin translation of the technology to other gas turbine engines. The project goal is to improve energy cost and value of California's electricity market by creating a cost-competitive alternative to conventional NO_x mitigation and reduction technologies for gas turbines in all size ranges.

This project supports the PIER Program objectives of:

- Improving the reliability and quality of California's electricity by eliminating harmful pollutants and allowing gas turbines, which offer higher reliability compared to the current generating fleet, to compete in a deregulated market.
- Improving the energy cost/value of California's electricity by introducing catalytically-fired, industrial scale gas turbines that will decrease the cost of electricity compared to the higher cost option of these gas turbines equipped with post-combustion treatment systems such as selective catalytic reduction.
- Improving the environment and public health risks of California's electricity by incorporating pollution prevention rather than a pollution clean-up technology that is potentially more effective at reducing NO_x and CO emissions by eliminating them from formation during combustion.

Proposed Outcomes:
This project will eliminate $100/kW cost of additional emissions control equipment currently required for NO_x mitigation on industrial-scale engines, and will provide superior NO_x performance at costs on a par with the best available dry low NO_x combustors for micro-scale gas turbine engines.

Actual Outcomes:

1. Brought to market readiness a catalytic combustion system that is cost competitive with other commercially available NO_x reduction technologies for industrial-scale gas turbines.
2. Lab tested the catalytic combustion system under actual engine service conditions to validate the adequacy of all components of the design and to establish durability during an 8000-hour performance test.
3. Completed the computation fluid dynamics (CFD) studies of the fuel-air mixer system that will improve the design by improving performance and reducing cost for the final commercial engine.
4. Lab tested to determine the effect of variability in gas fuel composition on catalyst performance.

5. Produced a commercial product that provides cost effective NO_x control that meets permitting requirements in the most restrictive air quality districts. The catalytic combustion system resulting from this project has a lower capital cost than selective catalytic combustion systems for the turbine engines with comparable NO_x control.

Project Status:
The project's first commercial application is at Sonoma Center in California. Kawasaki is offering Catalytica's catalytic combustor in its gas turbine.

Emerging Distributed Resource Technologies - Program 33

Contract #: 500-00-023 **Project #:** 40-43
Contractor: Electric Power Research Institute (EPRI)
Subcontractors: Gas Technology Institute : Nexant, Inc. : Energy International, Inc. : ADI Thermal Power Corporation : American Electric Power : PowerCo US, Inc. : Arthur D. Little, Inc. : National Rural Electric Cooperative Association : Power Computing Systems : Rolls-Royce, Inc. : Southern California Edison : EPRI PEAC Corporation
Project amount: $379,927
Match amount: $1,382,994
Contractor Project Manager: Doug Herman (650) 855-1057
Commission Contract Manager: Jairam Gopal (916) 654-4880
Status: Completed

Fundamental Information about Distributed Energy Resources
33.001: DER Technology Assessments
33.002: Strategic Intelligence on Emerging DER Technology
33.003: DER Technology Business Venture Forum

Engines and Turbines for Grid Support
33.004: Technology Development Watch and Data: Engines and Small Gas Turbines
33.005 Monitoring and Validation of Field Applications: Engines and Small Gas Turbines
33.006: Business Case for DER Grid Support

Microturbines and Mini-Energy Storage
33.010: Validated Performance/Durability Data on Microturbine and Mini-Storage Products
33.011: Annual Microturbine and Mini-Storage Technology and Vendor Assessment
33.012: Integrated Microgeneration and Storage Concepts

Fuel Cells
33.013: Solid Oxide Fuel Cell R&D—Hybrid, Cogeneration, and Low-Temperature Systems
33.014: Residential Power Generator Technical Evaluation
33.015: Stationary Fuel Cell System Derived from Automotive R&D
33.016: Molten Carbonate Fuel Cell Systems: Technology Update

Project Description:
The purpose of this project is to promote the potential that distributed energy resources (DER) have to provide a substantial portion of the energy alternatives now demanded by California electricity users. Both energy service providers and customers need accurate and unbiased information on the benefits and liabilities associated with commercially available and emerging distributed resource technologies. DER technologies offer third-party energy service providers and energy customers innovative solutions to their energy service needs. EPRI's Emerging DER Technologies program provides detailed information on commercially mature reciprocating engines and gas turbines, and emerging microturbines and fuel cell systems technologies. To gather this information, EPRI assesses advanced DER components, performs technology validations, and leads pre-commercial development of technologies that offer high pay-off. As a member, the Energy Commission obtains intelligence in three distinct areas: rapid changes in technology, development of new distributed resources, and post-R&D commercialization initiatives. This program examines a balanced portfolio of near, intermediate, and long-term options.

This project supports the PIER Program objectives of:

- Improving the reliability/quality of California's electricity by developing generation options that energy providers can utilize to provide unique solutions for peaking power issues, to enhance system reliability (system voltage control), and to assure power quality to their customers.
- Improving the energy cost/value of California's electricity by assisting in the development of innovative distributed resource technologies that can potentially provide lower delivered cost electricity than central station power.
- Improving the environmental and public health costs/risks of California's electricity by assisting in developing fuel cell systems and other environmentally preferred generation technologies to replace traditional central station power.

Proposed Outcomes:

1. Perform DER technology assessments including current status, potential for improvements, critical components and issues, and the likelihood of success.
2. Deliver unbiased accurate strategic intelligence on emerging DER technologies to increase customer choice and enable competition.
3. Organize and conduct a DER technology business venture forum to allow participants to learn about new technology developments and market trends.
4. Demonstrate a novel control and dispatching hardware/software system for distributed generation.
5. Track and review current developments in microturbine and mini-energy storage technologies and vendors.
6. Perform independent assessments that evaluate vendor claims.
7. Explore and evaluate promising new concepts for integrating microgeneration and energy storage.
8. Evaluate the technical and business potential of emerging next-generation solid-oxide fuel cell technologies, including hybrid, cogeneration, and low-temperature systems.
9. Test the capabilities of small power systems for residential use.
10. Exploit fuel cell developments in automotive markets for high-value commercial and small industrial stationary DR applications.
11. Follow and develop information from field tests of molten carbonate fuel cells being conducted around the United States and overseas.

Actual Outcomes:

1. DER Technology Assessments.
    - A technical report—*Performance Testing of a Flywheel-Based Uninterruptible Power Supply* (1004444)—was published that provides complete details of performance testing of the UPS system, including test instrumentation and setup, test results, and overall conclusions. The system offers an innovative power quality solution for a broad range of industrial and commercial applications. It provides stored energy, immediately available, to protect critical loads against temporary power disturbances such as outages, sags, and surges.
    - A technical report—*Stirling Engine Assessment* (1007317)—was published that presents a summary of the technical trends, commercialization status, and economic viability of Stirling engine technology for distributed generation applications. While fuel cells and microturbines have received a majority of the recent focus, Stirling engine technology is beginning to receive more attention as a viable, and potentially competitive, distributed generation option.

2. Strategic Intelligence on Emerging DER Technology.
   - Six issues of an informative intelligence report—*Strategic Intelligence Update: Technology Development*—were published, providing up-to-date news and expert analysis of emerging DER technologies and trends—both domestic and internal.
3. DER Technology Business Venture Forum.
   - A high-level professional conference on venture capital financing of emerging energy technology firms, specifically those related to distributed resources, was held in July 2002 in Boston. It provided a forum for utilities, energy companies, equipment manufacturers, and vendors to discuss the latest technology, market, and policy developments. A report—*Report on the EPRI Business Venture Forum 2002: Whither Capital Markets for DR?* (1004445)—was published that summarizes and characterizes presentations made at the forum.
4. Control and Dispatching Software/Hardware.
   - The project team installed a control and dispatching system for distributed generation at the Lovelace Medical Center in Albuquerque, New Mexico and documented the system's operation. A technical report, *Novel Distributed Generation Control and Dispatching System: Application Validation and Benefits Quantification* (1004448), describes the system, which allows the connection of multiple generators at a number of sites to a utility control and monitoring system for the purpose of providing peaking power for the utility. Using distributed generation for this purpose is a potentially cost-effective solution to localized power system constraints caused by the inability to increase power transmission into an area experiencing steady growth in local power demand.
5. Microturbine and Mini-Storage Technology and Vendor Assessment.
   - The project team developed a technical review report, *Microturbine and Mini-Storage Technology and Vendor Assessment—Annual Update* (1004454), which includes vendor profiles and product timing information, as well as technology performance, application, and operating characteristics.
6. Integrated Microgeneration and Storage Concepts.
   - The project team conducted engineering design, cost, and test analysis research on existing technology concepts for integrating microgeneration and energy storage. A web-based report, *Integrated Distributed Generation and Energy Storage Concepts* (1004455), was produced that describes the performance benefits of combining microturbines and other distributed generators with various energy storage concepts.
7. Solid Oxide Fuel Cell (SOFC) R&D—Hybrid, Cogeneration, and Low-Temperature Systems.
   - To help guide future R&D investments in fuel cell hybrids, EPRI undertook a study with DOE to investigate the future market potential for fuel cell hybrids in the United States. The study's main goal was to evaluate the scale, efficiency, and performance relationships of fuel cell hybrids to satisfy market needs and to quantify the market potential under a competitive electricity market scenario. A report, *Fuel Cell Hybrids: Market Assessment and Early Adopter Study* (1007096), presents the study results, which will be useful in shaping future product requirements and establishing research and development goals.
   - A technical update report, *SOFC Technology Development* (1004457) was published that describes development and test results as well as technological and economic assessments of emerging SOFC applications, including hybrid SOFC-combustion turbines, SOFC-based cogeneration, and low-temperature planar SOFCs.
   - A technical report—*1 MW Fuel Cell Project: Test and Evaluation of Five 200 kW Phosphoric Acid Fuel Cell Units Configured as a 1 MW Power Plant* (1007014)—was published that describes a demonstration of the new technology that is needed for utility management and control of multiple fuel cell power plants at a single location in an assured power application.
   - The project team continued 2001 work to evaluate polymer electrolyte membrane residential power generators and to define and test SOFC systems for residential power. Findings—including performance, cost, and durability information—are presented in a web-based technical review document, *Residential Power Generation Technical Evaluation* (1004457).
8. Stationary Fuel Cell System Derived from Automotive R&D.

- Researchers gathered information on performance, cost, and durability, which will be presented in a technical report, *Stationary Fuel Cell System Derived from Automotive R&D* (1004458), scheduled for publication in March 2003.

9. Molten Carbonate Fuel Cell Systems: Technology Update.
    - The project team followed a series of MCFC field tests conducted in the United States and overseas and developed information on current activities, as well as durability, performance, interconnectivity, and related issues. Findings are presented in a technical review publication, Molten Carbonate Fuel Cell Systems Technology Update (1004459), scheduled for publication in March 2003.

Project Status:
The project has been completed.

Energy Efficient, Low Emission, Cost Effective MicroPilot Ignited Natural Gas Engine Driven Genset for Deregulated, Distributed Power Generation Market

Contract #: 500-97-041
Contractor: Gas Research Institute
Subcontractors: BKM, Inc.
Contract Amount: $982,528
Match Amount: $250,000
Contractor Project Manager: Lou Lautman (847) 768-0760
Commission Contract Manager: Avtar Bining Ph.D. (916) 657-2002
Status: Completed

Project Description:
The purpose of this project is to develop a new technology which takes advantage of the cost and emissions benefits of clean burning natural gas, the fuel efficiency of modern diesel engines, and the low first cost of high production diesel engines to further the use of internal combustion engines in distributed generation. This technology is known as MicroPilot diesel-cycle natural gas engine.

If successful this project will eliminate $100/kW cost of additional emissions control equipment currently required for NO_x mitigation on reciprocating engines, and will provide superior NO_x performance at costs on a par with or lower than the best available control technology, i.e. Selective Catalytic Reduction, for low NO_x engines.

This project supports the PIER Program objectives of:

- Improving the reliability/quality of California's electricity by making lower cost, more reliable and better quality electrical power available via distributed generation where it is not possible to do so under central power generation approaches.
- Improving the energy cost/value of California's electricity by providing expected energy cost under $0.04/kWhr and installed cost under $200/kW.
- Improving the environmental and public health costs/risks of California's electricity because there is no known or suspected adverse impacts to the environment, citizen's health or safety resulting from this project or the commercialization of this technology.

Proposed Outcomes:

1. Complete development of a 1- percent MicroPilot engine.
2. Demonstrate a production ready version of the MicroPilot technology applied to the very popular Caterpillar 3412 diesel generator set engine. The MicroPilot technology developed and demonstrated under this project will be offered to Caterpillar (and all other OEM manufacturers) for commercialization.

Actual Outcomes:
None. The project results could not be applied in California due to a change in California Air Resources Board emission regulations for distributed generation technologies.

Project Status:
The project ended with $77,922 remaining unspent. That amount was returned to the PIER account.

Low NO_x Gas Turbine Combustors for Distributed Power Generation

Contract #: 500-97-031
Contractor: Alzeta Corporation
Subcontractors: Solar Turbines Incorporated : Honeywell, Inc. : FETC
Contract Amount: $878,788
Match Amount: $675,000
Contractor Project Manager: Scott Smith (408) 727-8282
Commission Contract Manager: Dave Hatfield (916) 654-7119
Status: Completed

Project Description:
The purpose of this project is to develop, test, and demonstrate Surface Stabilized Combustor (SSC) that is reliable, quiet, compact, and operates with low NO_x, CO, and unburned hydrocarbon emissions. Our research focused on the development of the GTSB into a commercial product. Gas turbine engines play an important role in the generation of efficient, low cost electric power and process heat for applications ranging from small 75-kilowatt (kW) distributed power systems up to 200-megawatt (mw) utility combined cycle power plants. Currently, market acceptance of gas-turbine-based distributed power systems and co-generation systems is hampered by their inherently high nitrogen oxide (NO_x) emissions that necessitate the use of expensive, temperamental, and maintenance-intensive NO_x control strategies such as steam injection and selective catalytic reduction (SCR). Efforts have been made to reduce gas turbine emissions at lower cost by using lean premixed combustion or Dry Low NO_x (DLN) techniques. DLN combustors are designed to reduce thermal NO_x emissions by burning with large amounts of excess air. So far, however, successful commercialization of DLN combustors has been limited by issues of noise, large size, durability, and cost as well as by the difficulties in maintaining consistent low emissions performance. During work on prior contracts, the concept of the Surface Stabilized Combustor (SSC) was developed, and a new product, the Gas Turbine Semi-radiant Burner (GTSB) emerged. A number of combustor prototypes were manufactured and tested under simulated gas turbine conditions. Testing of the GTSB occurred at the Federal Energy Technology Center (FETC), Honeywell Engine Systems (Honeywell), and Solar Turbines. While flame stability was sometimes difficult to achieve, we obtained a wealth of positive emissions data. Simultaneous low NO_x and carbon monoxide (CO) (sub nine parts per million (ppm)) were reached at every pressure from 1 to 12 atmospheres (atm). Both NO_x and CO were measured under one ppm at various times throughout the testing.

If successful, this project will eliminate $100/kW cost of additional emissions control equipment currently required for NO_x mitigation on industrial-scale engines, and will provide superior NO_x performance at costs on a par with the best available dry low NO_x combustors for micro-scale gas turbine engines.

This project supports the PIER Program objectives of:
- Improving the environment, public health and safety.

When the GTSB is commercialized in gas turbine engines, it will provide the State of California with:
- Improved fuel efficiency through enabling clean, cost effective, high efficiency cogeneration to remain competitive in the face of increasing NO_x controls.
- Lower fuel usage due to potential elimination of SCR that requires ammonia derived from natural gas.
- Reduced cost of power due to reduced capital and operating costs associated with production of peak power.
- Reduced environmental pollutant emissions from industrial and power generation facilities.
- Improved capital utilization that reduces power costs and improves industrial competitiveness.
- Products manufactured in California creating jobs and economic activity.

Proposed Outcomes:
This project continued to develop, test, and demonstrate SSC that is reliable, quiet, compact, and operates with low NO_x, CO, and unburned hydrocarbon emissions. Our research focused on the development of the GTSB into a commercial product. The technical and economic objectives of the project were to develop a SSC with the following characteristics:

- Operation with preheat temperatures up to 1000°F and excess air levels exceeding 100 percent without bypassing.
- Reliable ignition, off-speed stability, and turndown over a suitable range of operating pressures, including an operational turndown ratio of 4:1.
- NO_x emissions from the burner of less than 9 ppm corrected to 15 percent oxygen, meeting or exceeding the best available control technology (BACT).
- Combustor pressure losses no greater than currently acceptable levels (three percent to six percent of operating pressure).
- Life cycle cost that yields a NO_x reduction cost factor of less than $1,000 per ton of controlled NO_x.
- Extremely low levels of CO and unburned hydrocarbons.
- Extreme thermal shock resistance to tolerate instantaneous fuel cut off at full load.
- Ease of inspection and field maintenance.

Actual Outcomes:
Several new combustors were designed, each representing a significant improvement in manufacturing techniques and engineering features. Initial testing of combustors was performed in Alzeta's 50 kW pressurized test facility. Successful results featuring superior emissions led to a demonstration of the technology at Honeywell (formerly AlliedSignal). The combustor was tested in a rig that qualifies combustors for use in the Parallon 75 engine (formerly the TurboGenerator engine). Preliminary results encouraged continued interest from Honeywell and combustor development is continuing toward full commercialization. Successful operation was displayed off-site during four separate rigorous test sessions, one at FETC in July 1998, two at Solar Turbines in October and December 1998, and one at Honeywell in February 2000. Although the combustor has yet to be tested in an actual engine, the project technical goals were achieved.

The most interesting results of this project included:

- Preheat in excess of 1000°F was applied during the tests. The combustors survived these elevated preheat temperatures and were actually able to operate at lower flame temperatures, resulting in lower NO_x emissions. Increased preheat resulted in greater flame stability which ultimately reduced NO_x emissions.
- Project goals regarding ignition and turndown were consistently met and demonstrated over a suitable range of operating pressures. Off speed stability was not addressed because the combustor was never run in an engine.
- NO_x emissions of less than 2 ppm, comparable to or lower than existing steam injection and SCR control systems, were displayed in tests at Alzeta and Honeywell.
- Combustor pressure losses were consistently less than five percent of operating pressure.
- Lower life cycle costs resulted from a number of improvements made in the manufacturing techniques.
- In the majority of the tests, CO and hydrocarbon emissions were extremely low (less than 9 ppm).
- The combustors displayed good thermal shock resistance to tolerate instantaneous fuel cut off at full load**.**
- All of the designs were modular, and thus easily maintained both in Alzeta's manufacturing facility and in the field.

After carefully considering patent claims, Alzeta filed an U.S. patent application for the GTSB combustor on January 22, 1999.

Conclusions:
The GTSB has now been tested at the facilities of two major gas turbine manufacturers and full commercialization is imminent. Several facts became clear as a result of this project:

- Excellent emissions are attainable at reproducible operating conditions corresponding to actual turbine operating conditions.
- Outward-fired burners are the preferred configuration for the targeted engines.
- It is possible to successfully package an entire mixer/burner assembly within the space available in commercial gas turbine engines.
- The flow rate of premix through the burner surface (or firing rate) needs to be increased linearly as pressure is increased to maintain a nearly constant velocity through the burner surface.
- Increased levels of preheat typical of recuperated gas turbines, such as the Parallon 75, lead to increased flame stability at lower flame temperatures and thus result in lower NO_x emissions.
- Any injection of cooling air into the primary combustion zone needs to be carefully controlled to minimize interaction with the burner surface. Such interaction can result in high emissions of CO and hydrocarbons.

Project Status:
The project results are being used by Alzeta to design and develop burners and combustor for industrial-scale engines under a follow on contract between Alzeta and the Energy Commission (Contract # 500-00-004)

EPAG Projects Completed in 2001

Solid Oxide Fuel Cell/Micro Turbine Gen. Hybrid

Contract #: 500-97-012 **Project #:** 7
Contractor: Edison Technology Solutions/Southern California Edison
Subcontractors: Siemens-Westinghouse : Northern Research Engineering Corporation : University of California, Irvine : Energy System Services Corp. : Paragon Consulting
Project Amount: $2,000,000
Match Amount: $14,900,000
Contractor Project Manager: John Leeper (626) 302-8936
Commission Contract Manager: Arthur J. Soinski Ph.D. (916) 654-4674
Status: Completed

Project Description:
The purpose of this project was to prove the concept of integrating two dissimilar electricity producing distributed generation technologies into one generation unit. The integrated hybrid system design consists of a 200 kW pressurized solid oxide fuel cell (PSOFC) and 50 kW microturbine generator (MTG). As designed, the hybrid would deliver 220 to 230 kW because the MTG operates below its normal inlet temperature. Atmospheric emissions from fuel cells are very low because fuel cells convert fuel to electricity by an electrochemical process without combustion. MTGs typically have higher atmospheric emissions than a fuel cell. However, in this hybrid, the fuel is converted electrochemically in the fuel cell. The hot exhaust gases exiting the PSOFC are expanded through the MTG turbine, driving the turbine's compressor to pressurize the fuel cell. Remaining available energy, the fuel cell exhaust, is used to drive an electric generator to produce additional electric power. The increased power generation occurs with no increase in either fuel consumption or atmospheric emissions.

The project risk is high for three reasons. First, the Siemens Westinghouse SOFC has not operated in pressurized mode. Second, SOFC technologies are still in the development stage. Third, integration of a fuel cell a MTG has not been attempted before.

This project supports the PIER Program objective of:
- Improving the energy cost/value and improving environmental and public health costs/risk of California's electricity by providing reliable, diverse, energy-efficient, low-emission distributed electrical resources.

Proposed Outcome:
- To prove the concept of integrating two dissimilar electricity producing distributed generation technologies into one generation unit.

Actual Outcomes:
1. The PSOFC Factory Acceptance Test was successfully completed with 110 hours of operation at the Siemens-Westinghouse factory.
2. Installation of the hybrid at the University of California, Irvine was completed in May 2000. System startup occurred in June 2000. Proof of concept was achieved with sustained operation with the PSOFC supplying thermal energy to drive the MTG, including multiple system startups and shutdowns.
3. The Site Acceptance Test (SAT) was successfully completed in January 2001 after 100 hours of operation. The SAT was the principal part of the demonstration funded by PIER.

After over 150 hours of operation, overheating and failure of the PSOFC negative power lead occurred. Operation was suspended and the PSOFC was returned to the manufacturer for repair. A 50 kW MTG was not available, therefore, a 75 kW MTG was installed.

Project Status:
The proof of concept demonstration was successful. The Contractor will provide the report on the full test program, extending over 3,000 hours, in 2003 as a courtesy.

EPAG Projects Completed in 2000

Advanced Fuel Cells (#165)

Contract #: 100-98-003 **Project #:** 1
Contractor: Gas Research Institute
Subcontractors: Materials and Systems Research, Inc. : Inc. (MSRI) : Honeywell, Inc.
Project Amount: $68,000
Contractor Project Manager: Ron Edelstein (847) 768-0889
Commission Contract Manager: Mike Batham P.E. (916) 654-4548
Status: Completed

Project Description:
The purpose of this project is to develop cost-effective, highly efficient fuel cell technology for distributed power generation from natural gas that has broad market applications in residential, commercial, industrial, and power generation. The project will capitalize on the results of previous GRI basic research that identified innovative cell designs and materials to reduce operating temperatures of solid oxide-fuel cells from 1000 ^{o} C to 700 ^{o} C. Those advances will enable large savings in the cost of the cells as well as the prospect of lower maintenance and longer life.

This project supports the PIER Program objectives of:

- Improving the environmental and public health costs/risk of California's electricity system because fuel cells emit low levels of atmospheric emissions and reduce the level of noise pollution vis-à-vis large scale power plants.
- Improving the energy cost and value of California electricity by providing high, fuel-to-electricity conversion efficiency.

Proposed Outcomes:

1. Provide the design of a low-cost, high-efficiency advanced fuel cell stack.
2. Provide fuel cell manufacturers with laboratory demonstrations of how to design and assemble solid oxide fuel cell stacks that operate below 700 ^{o} C with very high efficiencies and power densities.
3. Develop fuel cell stacks that cost less than $300 per kilowatt with electrical efficiencies greater than 50%.
4. Determine the best options for incorporating fuel processing within the stack, either through internal reforming or direct oxidation of methane.

Actual Outcomes:

1. MSRI has successfully tested a 250-Watt stack. A 100-Watt stack was operated 0.4 W/cm^2 for 500 hours with repeated thermal cycling and no voltage loss. The internally manifolded stack operated and hydrogen and natural gas.
2. Scale-up from 2"X2" to 4"X4" stacks is complete. Key stack design and metallic interconnect patents have been issued.

Project Status:
This project is complete. The Commission will fund additional research in this area in contract #500-00-022.

Emerging Distributed Resource Technologies

Contract #: 100-98-001 **Project #:** 9
Contractor: Electric Power Research Institute (EPRI)
Subcontractors: Power Computing Systems : Proton Energy Systems, Inc. : Hpower : American Fuel Cell Corporation : NYSEG : International Fuel Cell : TMI : MSRI : Southern California Edison : Chugach Electric Assoc. : San Diego Gas and Electric Company : American Electric Power
Project Amount: $428,650
Match Amount: $7,097,973
Contractor Project Manager: Dan Rastler (650) 855-2521
Commission Contract Manager: Jairam Gopal (916) 654-4880
Status: Completed

Project Description:
The purpose of this project is to promote the potential that distributed energy resources (DER) have to provide a substantial portion of the energy alternatives now demanded by California electricity users. Both energy service providers and customers need accurate and unbiased information on the benefits and liabilities associated with commercially available and emerging distributed resource technologies. DER technologies offer third-party energy service providers and energy customers innovative solutions to their energy service needs.

EPRI's Emerging DER Technologies target provides detailed information on commercially mature reciprocating engines and gas turbines, and emerging microturbines and fuel cell systems technologies. To gather this information, EPRI assesses advanced DER components, performs technology validations, and leads pre-commercial development on technologies that offer high pay-off. As a member, the Energy Commission will obtain intelligence in three distinct areas: rapid changes in technology, development of new distributed resources, and post-R&D commercialization initiatives. This target examines a balanced portfolio of near, intermediate, and long-term options.

This project supports the PIER Program objectives of:

- Improving the reliability/quality of California's electricity by developing generation options that energy providers can utilize to provide unique solutions for peaking power issues, to enhance system reliability (system voltage control), and to assure power quality to their customers.
- Improving the energy cost/value of California's electricity by assisting in the development of innovative distributed resource technologies that can potentially provide lower delivered cost electricity than central station power.
- Improving the environmental and public health costs/risks of California's electricity by assisting in developing fuel cell systems and other environmentally preferred generation technologies to replace traditional central station power.

Proposed Outcomes:

1. Provide unbiased accurate information on emerging DER technologies to increase customer choice and enable competition.
2. Provide information and assistance toward the resolution of cross cutting issues that generally slow the adoption process.
3. Bring to market readiness fuel cell technologies that include polymer electrolyte membrane (PEM) fuel cell systems and ultra-high efficient solid-oxide fuel cells (SOFC).
4. Accelerate the development of spark-ignited and micro-pilot, dual-fuel natural gas engines with major engine manufacturers for commercial applications in the 600 kW to 2 MW size range.
5. Conduct a Tailored Collaboration entitled "Workshop on Environmental Impacts of New Generation in California" to inform the public debate on the environmental effects of new generation options.
6. Conduct a Tailored Collaboration entitled "Emissions Testing and Certification Guidelines for DG Generators" to reduce the time and cost of DG technologies to meet existing and future emissions regulation.

Actual Outcomes:

1. Unbiased accurate information.
   - *Assessment of Distributed Resource Technologies* (TR-114180) was published.
   - Bench and field tests were conducted on PEM fuel cells and microturbines, and detailed technology assessments—including data on performance, emissions, and power quality characteristics—were published as *50 kW PEM Fuel Cell System Design, Fabrication, and Test: System Design—Final Report* (1000771).
   - A state-of-the-art assessment - *Assessment of Small Reciprocating Engine Manufacturers and Generator Set Packagers* (1000766) —was produced on internal combustion engines for electric generation applications.
   - A market study report—*Distributed Generation Market Study: Advanced Turbine System Program* (TR-112174) —was published on advanced turbines.
   - *Intelligence Reports*—quarterly reports on the latest breaking information on DER technologies—were published.
   - DER technologies were evaluated through site visits and meetings with leading manufacturers, and results were published in quarterly reports and technical reports.
   - An annual national DER conference was organized, providing a forum for utilities, energy companies, equipment manufacturers, and vendors to discuss the latest technology, market, and policy developments.
2. Resolution of cross-cutting issues.
   - A report—*Gas Turbine Recuperators: Benefits and Status* (TR-113745) —was published on the benefits and status of gas turbine recuperators.
   - A report—*Assessment of Emission Control Technologies for Distributed Resource Options* (TR-113743) —was published on emission control technologies for DR options.
   - The performance of a 7-MW gas turbine for transmission and distribution grid support and a residential fuel cell were evaluated.
3. Fuel cell technologies.
   - An advanced solid oxide fuel cell (SOFC) system was successfully tested. Test results were summarized in a report - *Demonstration of a High Efficiency Solid Oxide Fuel Cell-Microturbine Hybrid Power System: Interim Report: Factory Testing* (1000751).
   - A technology assessment of residential power systems—*Technology Assessment of Residential Power Systems for Distributed Generation* (TR-113897) - was published.
   - An assessment was published of fuel-processing technology for fuel cells—*Hydrocarbon Reformers for Fuel Cell Systems* (TR-113742).
   - A report evaluating 100-kW to 300-kW SOFC systems was published.
   - A bottom-up assessment of planar SOFC technologies was conducted, investigating the details of the cell, stack, subsystem, and balance-of-plant. A report—*Reduced-Temperature, Anode-Supported, Planar Solid Oxide Fuel Cell Systems: Product Definition* (1000773) — summarized results.
   - A report was published on factory test data and on market and economic analysis of 5-kW residential power generators.
   - A report—*50 kW PEM Fuel Cell System Design, Fabrication and Test: Utility/User Interface Issues* (1000750) —was published on an analysis of a 50-kW PEM system for commercial applications.
4. Natural gas engines.
   - A report —*Reciprocating Engines for Stationary Power Generation: Technology, Products, Players, and Business Issues* (TR-113894) —was published on reciprocating engines for stationary power generation.
5. A workshop entitled "*Workshop on Environmental Impacts of New Generation in California*" was held in San Diego in October 1999, and a final report was published.

6. The scoping study was completed and a report —*Emissions Testing and Certification Guidelines for Distributed Generators* (1007452) —was published.

Project Status:
The Commission's participation in these targets ended December 31, 2000. The tailored collaboratives are complete.

Fuel Cell Development and Demo

Contract #: 500-97-011 **Project #:** 2
Contractor: San Diego Gas and Electric Company
Subcontractors: M-C Power Corporation
Project Amount: $300,000
Contractor Project Manager: Al Figueroa (619) 654-8614
Commission Contract Manager: Avtar Bining Ph.D. (916) 657-2002
Status: Completed

Project Description:
The purpose of this project was to demonstrate the performance and reliability of a molten carbonate fuel cell (MCFC) electric generating technology with upgraded system components. Proving the efficiency and effectiveness of fuel cells helped propel this low-emission, electric generation technology into the marketplace. This project assisted in the advancement of MCFC technology by providing labor and selected materials for modifying the existing balance-of-plant (BOP) components designed for a 250 kW capacity MCFC demonstration plant at the Marine Corps Air Station Miramar. Balance-of-plant modifications were required to accept the next generation fuel cell stack having a capacity of 75 kW. An improved design of MCFC fuel cell stacks was tested and demonstrated at the Miramar plant. Other system components, including a new hot gas blower and turbo charger, were also tested. Additionally, an assessment of the technical feasibility of integrating micro-turbine generator technology with the MCFC technology was done.

This project supports the PIER Program objective of:

- Improving the reliability/quality of California's electricity by offering energy efficient, low-emission alternate sources of electricity that diversify the State's electrical generation resources.

Proposed Outcomes:

1. A modified BOP suitable to accept M-C Power's 75 kW MCFC stack.
2. Testing and evaluation of a new hot gas blower and turbocharger for a reliable performance.
3. Assessment of technical feasibility of integrating micro-turbine technology with the MCFC technology.

Actual Outcomes:

1. The project resulted in a modified reliable BOP suitable for accepting the M-C Power's 75 kW MCFC stack.
2. New hot gas blower and turbocharger units were tested and evaluated. The new units were reliable during the BOP testing and subsequent 75 kW MCFC stack testing. The system operated continuously for nearly 3,000 hours.
3. Assessment has revealed very favorable prospects of integrating the micro-turbine technology with the MCFC technology.

Project Status:
The project has been completed.

EPAG Projects Completed in 1999

Analyses and Technology Transfer for Fuel Cells - National Fuel Cell Research Center

Contract #: 500-98-052
Contractor: University of California, Irvine
Subcontractors: Southern California Edison : M-C Power Corporation : Siemens-Westinghouse : Energy System Services Corp.
Contract Amount: $305,733
Match Amount: $14,332
Contractor Project Manager: G. Scott Samuelsen (949) 824-1999
Commission Contract Manager: Arthur J. Soinski Ph.D. (916) 654-4674
Status: Completed

Project Description:
The purpose of this Agreement was to improve the understanding of the operation of fuel cell and fuel cell/microturbine hybrid systems and to improve technology transfer capabilities at the National Fuel Cell Research Center (NFCRC). To do improve our understanding of these two electricity generating systems, the NFCRC would develop new computer modeling tools. To address technology transfer the NFCRC would:

- Design, construct and operate a multi-function room on the University of California, Irvine (UCI) campus.
- Establish the Educational Facility for Ambient Air Monitoring on the UCI consisting of air quality monitoring instrumentation and computers for data collection and presentation.
- Establish a web site to make the information developed as a part of this project available to the wider public.

This project supports the PIER Program objective of:

- Improving the reliability/quality of California's electricity by helping advance the development of clean and energy efficient distributed power generation technologies which will provide enhanced system reliability, highly efficient power generation, cleaner environment, and reduced cost.

Project Outcomes:

1. A review was made of existing models. Characteristics of those models were summarized, and advantages of the project's modeling methods and approach were described. These models can be used to design of fuel cell system components, to design fuel cell testing procedures, and to better understand fuel cell systems and microturbine operation and performance.
2. Computer simulation models for three fuel cell and fuel cell/microturbine components were developed:
   - A tubular solid oxide fuel.
   - A reformer that converts hydrocarbon fuels into a hydrogen-containing gas mixture to be used by the fuel cell.
   - A microturbine.
3. The technology transfer accommodations, ambient air monitoring workstation and website have been completed and are in routine use.

Project Status:

The computer modeling approaches used in this project are being applied to other fuel cell and fuel cell/microturbine systems in a subsequent Interagency Agreement (Contract #500-99-028).

Micro Turbine Generator (Distributed Generation)

Contract #: 500-97-012 **Project #:** 8
Contractor: Edison Technology Solutions/Southern California Edison
Subcontractors: University of California, Irvine : Energy System Services Corp. : CAMS : Paragon Consulting : Capstone Turbine Corporation : Bowman Turbines, Inc.
Project Amount: $500,000
Match Amount: $1,500,000
Contractor Project Manager: John Leeper (626) 302-8936
Commission Contract Manager: Avtar Bining Ph.D. (916) 657-2002
Status: Completed

Project Description:
The purpose of this project was to test small gas turbines in distributed electrical generation applications. This project is part of a public/private sector $2 million collaborative microturbine generator (MTG) transition procurement and testing project at the University of California, Irvine (UCI).

This project procured and tested small gas turbine technology in distributed generation applications. The MTG, which is typically rated in the 30-100 kW range, is a small combustion turbine that has an integral high-speed generator.

This project supports the PIER Program objectives of:

- Improving the reliability/quality and the energy cost/value of California's electricity by offering alternatives for distributed generation applications that will reduce the costs of transmitting and distributing electricity.
- Improving environmental and public health costs/risk of California's electricity by reducing NO_x emissions from on-site electrical generation.
- Impacting local and state economy by contributing information to help in developing an emerging distributed generation technology industry in California.

Proposed Outcomes:

1. Enhance system reliability - MTGs can enhance system reliability benefits when operated as distributed generators.
2. Reduce NO_x emissions.
3. Economic Development – Procure MTGs from two California-based MTG manufacturers. If successful, this project will contribute information to help in developing an emerging distributed generation technology industry in California.

Actual Outcomes:

1. Two Bowman (35 kW and 60 kW) and a Capstone 28 kW were tested. The Bowman 35 kW operated for 100.6 hours, the Bowman 60 kW operated for 4.2 hours and the Capstone 28 kW operated for 1,879 hours. Both Bowman units operated on a sporadic basis due to component failures and operational restrictions imposed by unacceptably high noise levels. The Capstone microturbine operated within the manufacturer's claimed efficiency rating at full load.
2. Both the Bowman 60 kW and the Capstone 28 kW units emissions test showed NO_x and CO levels that met or were well below limits set by the South Coast Air Quality Management District.
3. The Capstone 28 kW unit's power quality measurements met the Institute of Electronics Engineering's standard for harmonic control in electric power systems.

Project Status:
The project has been completed.

Energy Systems Integration (ESI)
Multi-Year Projects Started in 2005

Demand Response as a System Reliability Resource

The Problem	For any market to function properly supply and demand information must be available to all customers; two-way communication must continuously connect supply with demand; and in some cases, automated decision-making (control) must be able to respond quickly to changing conditions. It is anticipated that a new interaction paradigms will have to be created between the electric transmission and distribution (T&D) infrastructure and customer loads. These paradigms will require advanced information, communication, and control relationships and technologies creating a demand response (DR) capability that executes customer preference automatically under a variety of market and contingency conditions.
Proposed Research	The purpose of this project is to conduct research on and demonstrate the capabilities of enabling technologies for establishing a real-time Demand Response (DR) infrastructure in California that addresses primarily contingency DR. Contingency DR involves load modification strategies that provide physical mechanisms for achieving immediate load reduction when system conditions warrant.
Research Justification and Goals	Supports California's goal to accelerate its implementation of demand response programs that signal the actual price of electricity to customers during peak demand periods per the Integrated Energy Policy Report 2004 Update; and to make progress achieving demand reduction and electricity savings per the Integrated Energy Policy Report 2003 by: • Conducting tests of many residential and small commercial load control devices to determine their aggregate capability to provide a system reliability service called spinning reserve in California. • Demonstrating the aggregate performance of small commercial and residential customer load control devices in California. • Enhancing electric reliability to Californians. • Reducing the cost of electricity to Californians.
Contractor	Department of Energy, Lawrence Berkeley National Laboratory
PIER Manager	David Michel III

This project is being conducted by the California Energy Commission's Public Interest Energy Research (PIER) program. PIER supports energy research and development that improves the quality of life in California by bringing environmentally safe, affordable, and reliable energy services and products to the marketplace.

Evaluation of Policy Impacts on the Economic Viability from a Project Owner's Perspective of California Based Distributed Generation/Combined Heat and Power

The Problem	Competitive Energy Insights (CEI) will perform an economic evaluation of three typical DG/CHP applications in three utility service territories in California. The analysis will be performed by applying CEI's EconExpert-IAT and EconExpert-DG software products to help decision makers understand the economic and risk factors associated with DG/CHP applications from the perspective of the various stakeholders in these transactions: site owners, building owners, and private developers.
Proposed Research	The purpose of this project is to perform an economic evaluation of three typical distributed generation/combined heat and power (DG/CHP) applications in each of California's three investor owned utility (IOU) territories. The final evaluation will be divided into three sections: 1) the costs and benefits of DG/CHP from the site and project owner's perspectives; 2) a sensitivity analysis that addresses the impacts of DG/CHP economics of key regulatory and policy factors (e.g., electric tariffs and rebates); 3) a comparison of the economic benefits and risks associated with the application of DG/CHP in California from the site and project owner's perspectives.
Research Justification and Goals	Supports California's goal to promote customer and utility owned distributed generation per the Energy Action Plan 2003; and to enable consumers and businesses to supply their own generation through the deployment of distributed generation and cogeneration per the Integrated Energy Policy Report 2003 by: • Providing decision and policy makers a clearer understanding of the economic viability impacts of policy and tariff structures on DG/CHP in California. • Assessing the drivers and risks at the DG project level from the perspective of the site installation/project owner.
Contractor	Competitive Energy Insight Inc.
PIER Manager	Mark Rawson

This project is being conducted by the California Energy Commission's Public Interest Energy Research (PIER) program. PIER supports energy research and development that improves the quality of life in California by bringing environmentally safe, affordable, and reliable energy services and products to the marketplace.

High Temperature Low Sag Conductor Test II

The Problem	An important high temperature, low sag conductor from 3M has emerged as a viable product (i.e., transmission-line wire/conductor that sags less than currently installed wires/conductors as its temperature increases due to increased electricity flowing through the conductor). This conductor may be capable of operating at temperatures as high as 250 degrees Celsius (482˚F) without violating present electrical clearances to ground and other objects. While this conductor has passed many industry standard tests for performance, utilities are wary of installing this conductor without having investigated its performance in a real-world setting.
Proposed Research	Evaluate and document the performance of this "high-temperature, low-sag" 3M conductor (i.e., transmission-line wire) as part of the effort under contract 500-01-025 WA -002 (Test 1) that compared the performance of the following types of conductors: Invar, Gap, Aluminum Conductor Composite Core (ACCC), and commercial forms of aluminum steel-supported conductors (ACSS). All these conductors may be capable of significantly increasing the ampacity (power carrying capacity) on current transmission line corridors without the need for extensive tower redesign.
Research Justification and Goals	Adds a project to the Commissions research portfolio that has the potential to enhance transmission and distribution capabilities as mandated by the Warren-Alquist Act; and supports California's goal to upgrade and expand the electricity transmission and distribution infrastructure per the Energy Action Plan 2003 by: • Enhancing the capabilities of the State's transmission and distribution system by increasing throughput over existing corridors. • Relieving congestion and allowing for operation by increasing the thermal limits and high temperature performance of transmission-line wires/conductors.
Contractor	Electric Power Research Institute (EPRI)
PIER Manager	Jamie Patterson

This project is being conducted by the California Energy Commission's Public Interest Energy Research (PIER) program. PIER supports energy research and development that improves the quality of life in California by bringing environmentally safe, affordable, and reliable energy services and products to the marketplace.

Modeling and Testing of Effects of Unbalanced Loading on Voltage Regulation-DTE

The Problem	California policy supports deployment of ditributed generation(DG) to meet growing electricity demand. However, utility ditribution circuits were not originaly designed to accomodate DG. Distribution circuits and line voltage regulators are designed for radial, one-way flow of power. When DG is connected to the circuit, two-way flows can result. Usually distribution circuits are single-phase load, but most of circuit performance measurement analytical tools are based on balanced three phase loads.
Proposed Research	The purpose of this project is to develop the tools, run simulations, and compare the results with actual field measurements of the voltage profile on a distribution circuit with and without distributed generation (DG) operating. DG megavolt-ampere (MVA) size is dependant on system voltage regulation, location of DG on the circuit and circuit protections systems. If the DG synchronous machine is allowed to absorb or export volt-amperes reactive (VARs), voltage can be decreased or increased to allow larger kilowatt injection and larger MVA sized DG.
Research Justification and Goals	Supports California's goal to promote clean, small generation resources located at load centers per the Energy Action Plan 2003; and to enable consumers and businesses to supply their own generation through the deployment of distributed generation and cogeneration per the Integrated Energy Policy Report 2003 by: • Reducing grid losses and increasing kilowatt injection. • Promoting new technologies to increase the use of distributed energy resources (DER) to support the grid. • Developing advanced electronics to control DER and distribution system interconnection
Contractor	National Renewable Energy Laboratory (NREL)
Site Location	Detroit, MI
PIER Manager	Bernard Treanton

This project is being conducted by the California Energy Commission's Public Interest Energy Research (PIER) program. PIER supports energy research and development that improves the quality of life in California by bringing environmentally safe, affordable, and reliable energy services and products to the marketplace.

Modeling Interconnection Analysis & Planning

The Problem	The cost of power electronics interconnection device for a distributed energy resources (DER) system can account for up to 40% of the system's cost. In addition to cost, power electronics' reliability and lack of standardization at current performance levels may prevent long term commercial penetration of DER systems. Improvements need to be made to power electronics' semiconductor-based switch and interfaces.
Proposed Research	The first goal of this project is to validate and leverage the work by Northern Power Systems, also performed within this contract, to develop a reliable, less expensive, standardized power electronics interconnection device for distributed energy resources (DER) systems. NREL will computer model their device and evaluate its performance when interconnected to a simulated utility system. The second goal is for NREL to assist PIER in the development of a multi-year program for advanced power electronic interfaces for distributed energy resources (DER) namely the "Advanced Power Electronics Interface (APEI) Initiative," that will be kicked off in 2006 under a new contract.
Research Justification and Goals	Supports California's goal to promote clean, small generation resources located at load centers per the Energy Action Plan 2003; and to determine system benefits of distributed generation and related costs per the Energy Action Plan 2003 by: • Developing a universal and cheaper power electronic based interconnection device. • Promoting new technologies to increase the use of distributed energy resources (DER) to support the reliability of the grid. • Developing inexpensive, advanced power electronics to control DER and the interconnection to the grid.
Contractor	National Renewable Energy Laboratory (NREL)
Site Location	Golden, CO
PIER Manager	Bernard Treanton

This project is being conducted by the California Energy Commission's Public Interest Energy Research (PIER) program. PIER supports energy research and development that improves the quality of life in California by bringing environmentally safe, affordable, and reliable energy services and products to the marketplace.

Multi-Area Real-Time Transmission Line Rating (RTR) Study: Rob Mohr/VG

The Problem	Power transfer into or out of an area or region typically occurs over multiple parallel transmission lines (a "path"). A thermal rating limitation on one line can cause the total power transfer over all the lines in a path to be limited, depending on system conditions. This can result in energy supply shortages, low voltages in the region, and reduced reliability margins. The application of real-time thermal line rating technologies can allow system operators to take advantage of favorable ambient conditions to increase line loadings and alleviate these constraints in many instances.
Proposed Research	This project completes the two remaining tasks and continues the efforts of Contract 500-02-018 to implement monitoring technologies to produce real-time ratings (RTR) of transmission lines, and to evaluate the use of RTR to mitigate both the power transfer into a large multi-utility transmission area, and the voltage constraints within a large area. The Sacramento area was selected as a test bed for the study. WAPA and PG&E transmission lines constitute some of the key paths into the Sacramento area, and data from these organizations' lines will be used in the analysis.
Research Results	Interim data indicate that on a key constrained line, a 1 MW rating increase -- facilitated by real-time ratings (RTR) -- results in a 14 MW net import increase into the region. Increases in transmission line ratings are possible over 90% of the time in the summer months, and curtailments of local hydro plants can be avoided a large part of the time.
Research Justification and Goals	Supports California's goal to align RD&D funding with public policy goals for transmission technology development to maximize efficient use of the bulk electricity grid per the Energy Action Plan 2005 by: • Determining the cost-effectiveness of using real-time ratings (RTR) to increase imports for large areas under normal conditions. • Developing and testing methods for mitigating combined thermal and voltage constraints within a region. • Evaluating methods for forecasting real-time transmission capability on the constrained lines.
Contractor	The Regents of the University of California - Office of the President/CIEE
Site Location	Oakland, CA
PIER Manager	Jamie Patterson

This project is being conducted by the California Energy Commission's Public Interest Energy Research (PIER) program. PIER supports energy research and development that improves the quality of life in California by bringing environmentally safe, affordable, and reliable energy services and products to the marketplace.

Sponsorship for the Second International Conference on Integration of Renewable and Distributed Energy Resources

The Problem	California has established that renewable and distributed energy resources are a preferred resource for the state. Research on the integration of these technologies to the utility system and into the electricity market place is occurring at state, national and international levels. There are limited forums that focus on the state or status of this collective research in order to allow practicioners, government decision makers, utilities, customers and others to share lessons learned and collaborate on finding solutions to implementation barriers.
Proposed Research	Through this project under the Electric Power Research Institute (EPRI) Contract, the California Energy Commission will cosponsor the Second International Conference on Integration of Renewable and Distributed Energy Resources to be held in Napa, California in December 2006. Other cosponsors include U.S. Department of Energy, Natural Resources Canada, EPRI and European Union - Research Directorate.
Research Justification and Goals	Supports California's goal to meet the needs for new generation first with renewable energy resources and distributed generation per the Energy Action Plan 2003; and to explore and expand new options for non-wires alternatives to transmission per the Integrated Energy Policy Report Update 2004 by: • Reviewing results of past and current research on a national and international basis. • Identifying the best practices, success stories and accumulated know-how for the integration of renewable and distributed energy resources.
Contractor	EPRI Solutions
PIER Manager	Mark Rawson

This project is being conducted by the California Energy Commission's Public Interest Energy Research (PIER) program. PIER supports energy research and development that improves the quality of life in California by bringing environmentally safe, affordable, and reliable energy services and products to the marketplace.

ESI Active Projects from Previous Years

Demand Response as a System Reliability Resource

The Problem	For any market to function properly supply and demand information must be available to all customers; two-way communication must continuously connect supply with demand; and in some cases, automated decision-making (control) must be able to respond quickly to changing conditions. It is anticipated that a new interaction paradigms will have to be created between the electric transmission and distribution (T&D) infrastructure and customer loads. These paradigms will require advanced information, communication, and control relationships and technologies creating a demand response (DR) capability that executes customer preference automatically under a variety of market and contingency conditions.
Proposed Research	The purpose of this project is to conduct research on and demonstrate the capabilities of enabling technologies for establishing a real-time Demand Response (DR) infrastructure in California that addresses primarily contingency DR. Contingency DR involves load modification strategies that provide physical mechanisms for achieving immediate load reduction when system conditions warrant.
Research Justification and Goals	Supports California's goal to accelerate its implementation of demand response programs that signal the actual price of electricity to customers during peak demand periods per the Integrated Energy Policy Report 2004 Update; and to make progress achieving demand reduction and electricity savings per the Integrated Energy Policy Report 2003 by: • Conducting tests of many residential and small commercial load control devices to determine their aggregate capability to provide a system reliability service called spinning reserve in California. • Demonstrating the aggregate performance of small commercial and residential customer load control devices in California. • Enhancing electric reliability to Californians. • Reducing the cost of electricity to Californians.
Contractor	Department of Energy, Lawrence Berkeley National Laboratory
PIER Manager	David Michel III

This project is being conducted by the California Energy Commission's Public Interest Energy Research (PIER) program. PIER supports energy research and development that improves the quality of life in California by bringing environmentally safe, affordable, and reliable energy services and products to the marketplace.

Verification of Optimal Methodology

The Problem	A broad range of initiatives created using the methodology developed under PIER contract 500-01-039 that can identify where distributed energy resources can provide specific transmission and distribution (T&D) network benefits needs to be expanded and quantified.
Proposed Research	The purpose of this project is to demonstrate the distributed energy resources (DER) benefits identification methodology developed under PIER contract 500-01-039 to quantify the potential for greater network efficiency and performance from ideally-situated DER. In this case, a demonstration of the methodology will apply to a larger more complex investor-owned power delivery system. Additionally, this project will also evaluate the impact of changes to the configuration of the distribution system and additions on both the distribution and transmission systems. The project will take into account the value of network benefits, reliability enhancements, capital, and operations and maintenance cost reductions or deferrals.
Research Justification and Goals	Supports California's goal to create a transparent electricity distribution system planning process that addresses the benefits of distributed generation per the Integrated Energy Policy Report 2003; and to determine system benefits of distributed generation and related costs per the Energy Action Plan 2003 by: • Developing analytical tool that can identify where DER and other non-wire alternatives can be located to alleviate power quality and T&D capacity and congestion in the State. • Helping overcome the barriers to the deployment of distributed energy resources. • Demonstrating the veracity of the simulation of the distribution and transmission systems as a single, integrated system. • Demonstrating the efficacy of the recommended recontrols and DER additions developed using the DER benefits identification methodology.
Contractor	New Power Technologies
PIER Manager	Linda Kelly

This project is being conducted by the California Energy Commission's Public Interest Energy Research (PIER) program. PIER supports energy research and development that improves the quality of life in California by bringing environmentally safe, affordable, and reliable energy services and products to the marketplace.

Electric Grid Infrastructure Security Initiative: Phase 1

The Problem	Following the terrorist attacks of September 11, the Electrical Power Research Institute (EPRI) assembled its own inter-disciplinary team to prepare the Electricity Infrastructure Security Assessment, which provided a preliminary analysis of potential terrorist threats. The recommendations of the Electricity Infrastructure Security Assessment now need to be put into action which includes conducting electric grid infrastructure security research development and demonstrations with California's IOUs, CAISO and other National Departments and Agencies responsible for security.
Proposed Research	The purpose of this project is to undertake a focused effort to identify key vulnerabilities in the electric power grid and where appropriate develop hardware, software and other tools to mitigate the impact of terrorist attacks on the North American electric grid.
Research Justification and Goals	Supports California's goal to guide development of its energy system in the public's best long-term interest and anticipate potential problems per the Energy Action Plan 2003 by: • Participating in the Infrastructure Security Initiative (ISI) Program to assist in developing technologies to enhance the security of California's electric grid. This project also addresses Public Resources Codes 25620.1.(c)(3) and (6).
Contractor	Electric Power Research Institute (EPRI)
Site Location	Palo Alto, CA
PIER Manager	David Chambers

This project is being conducted by the California Energy Commission's Public Interest Energy Research (PIER) program. PIER supports energy research and development that improves the quality of life in California by bringing environmentally safe, affordable, and reliable energy services and products to the marketplace.

DUIT-Distributed Utility Integration Test

The Problem	Voltage regulation and system stability are Distributed Utility Integration Test (DUIT) topics that have been prioritized by protection engineers as major concerns when distributed generation reaches medium to high penetration levels on the distribution system.
Proposed Research	The goal of the Distributed Utility Integration Test (DUIT) is to lower the cost of interconnecting distributed generation into the electricity distribution system and ultimately aid in grid support. These tests are wide in range and scope and consider a wide range of distributed energy resources (DER) such as inverter based DER (photovoltaic, batteries, fuel cells, microturbines) together with rotating equipment including synchronous and induction generators. The testing also goes beyond standards validation and looks at interaction issues which could arise from the interconnection of DER technologies and their interaction with the electrical distribution system from low to high penetration levels.
Research Justification and Goals	Supports California's goal to promote customer and utility owned distributed generation per the Energy Action Plan 2003; and to determine system benefits of distributed generation and related costs per the Energy Action Plan 2003 by: • Proving the feasibility and the integration of diverse distributed generation and storage technologies in a distribution system. • Providing a testing ground for observing and measuring the interactions between the distributed technologies on the distribution system. • Conducting full-scale implementation testing and demonstration of commercially available distributed generation technologies in an actual utility installation.
Contractor	Distributed Utility Associates
Site Location	San Ramon, CA
PIER Manager	Jose Palomo

This project is being conducted by the California Energy Commission's Public Interest Energy Research (PIER) program. PIER supports energy research and development that improves the quality of life in California by bringing environmentally safe, affordable, and reliable energy services and products to the marketplace.

Demonstration of a Zinc-Bromine Battery (ZBB) Energy Storage System

The Problem	The primary barrier to implementation of storage to defer capitol infrastructure upgrades in California is unfamiliarity with the technology on the part of utilities. Utilities are reluctant to spend money on something that might not work, and regulatory agencies could disallow the expenses as imprudent. These barriers are affecting the adoption of the Zinc-Bromine Battery Energy Storage System which has the potential to defer capitol infrastructure upgrades of substations in growing areas saving utilities and ratepayers money.
Proposed Research	This project will eliminate the barriers to installing Zinc-Bromine Battery Energy Storage System at substations in growing areas by demonstrating the economic benefits of using a Zinc-Bromine Battery at a PG&E substation for a minimum of 18 months.
Research Justification and Goals	Supports California's goal to ensure that the utilities are able to carry out their obligation to serve, including having adequate reserves, recognizing this is a critical component of the current hybrid energy system per the Energy Action Plan 2003 by: • Reducing barriers to commercial acceptance through conducting a successful large-scale utility demonstration. • Avoiding costly grid investments. • Providing support to the distribution system to improve reliability and sufficiency. • Increasing the number of new technologies that provide increased reliability/sufficiency of power to consumers by one. This project also addresses Public Resources Codes 25620.1.(c)(2), (3) and (4).
Contractor	ZBB Energy Corporation
PIER Manager	David Chambers

This project is being conducted by the California Energy Commission's Public Interest Energy Research (PIER) program. PIER supports energy research and development that improves the quality of life in California by bringing environmentally safe, affordable, and reliable energy services and products to the marketplace.

Automated Demand Response in Large Facilities

The Problem	There are a number of key barriers to demand response (DR). First, DR operating strategies that can be used to shed electric demands are not well understood by field engineers. Second, DR automation needs further testing to demonstrate minimal disruptions to services at sites using automated DR. Third, research is also needed to explore how ready today's buildings are to receive DR signals and to explore how to scale up the DR automation to allow large numbers of sites to participate.
Proposed Research	This project explores the development and field-testing of fully automated demand response technologies to send signals directly to large commercial, institutional, and industrial facilities to initiate demand response strategies. The research involves development of the signaling system, development of the demand response strategies within the facilities, and analysis of the performance of the demand response strategies to ensure maximum demand shedding and minimal disruption of services at the test sites.
Research Results	This study has found that automated demand response is technically feasible and can be configured and installed with today's technology. Many Energy Management Control Systems can be used for demand response strategies and can receive signals over the Internet. Significant demand sheds of 10% or more of the facility load can be achieved in a large number of buildings with minimal impact to the facility services. These sheds can be sustained for more than three hours. Field tests have demonstrated electric demand sheds of up to six hours.
Research Justification and Goals	Supports California's goal to implement much more comprehensive demand response programs per the Integrated Energy Policy Report 2004 Update; and to make progress achieving demand reduction and electricity savings per the Integrated Energy Policy Report 2003 by: • Developing fully automated demand response technologies and strategies for integration with California's demand response programs. • Evaluating which demand response operating strategies minimize loss of service while maximizing peak demand reduction. • Evaluating technological capabilities of today's controls and communication systems to receive and act on signals for automated demand response. • Collaborating with California's utilities to integrate these findings into demand response programs for customers. • Evaluating the technical and economical potential of the commercial and industrial sectors for automated demand response.
Publications	Fed by PIMS
Contractor	Department of Energy, Lawrence Berkeley National Laboratory
PIER Manager	David Michel III

This project is being conducted by the California Energy Commission's Public Interest Energy Research (PIER) program. PIER supports energy research and development that improves the quality of life in California by bringing environmentally safe, affordable, and reliable energy services and products to the marketplace.

Demand Response through Thermal Mass

The Problem	The opportunity exists to help California's electric utilities with the problem of limited electrical supply capacity relative to growing demand during California's hot summers. Existing building thermal mass can be used to pre-cool buildings at night. With the appropriate demand response price signals provided through the customer's tariff, a significant incentive exists to modify normal building operations to take advantage of this cooling strategy with minimal upfront capital investment. Research is needed to test this demand response cooling strategy.
Proposed Research	This project explores the potential to shift energy usage with demand response systems in large and small non-residential buildings to off-peak periods by pre-cooling the building and allowing the "mass" of the structure to absorb heat. Two types of structures are being explored: large offices and small commercial buildings (small retail). Building energy usage and building occupant comfort are the key parameters being investigated to determine the viability of the concept.
Research Results	Preliminary results suggest that for large buildings a significant portion of the building load can be shifted to off-peak periods with little or no effect on occupant comfort. Building owners and their site energy managers who are responsible for the comfort of the building can use this technique to respond to anticipated critical peak pricing tariffs that will be made available by California's investor owned utilities. For a more complete accounting of project results please go to:
Research Justification and Goals	Supports California's goal to implement much more comprehensive demand response programs per the Integrated Energy Policy Report 2004 Update; and to make progress achieving demand reduction and electricity savings per the Integrated Energy Policy Report 2003 by: • Determining the feasibility of shifting electrical energy usage in large and small buildings by pre-cooling the structure. Conducting the evaluation in a variety of California's climate zones. • Assessing the effect on building occupant comfort through the use of survey tools. • Modeling the energy consumption of the buildings using computer analysis tools. • Developing survey hardware and software tools to determine occupant comfort in the buildings. • Collaborating with California's utilities to help them eventually integrate these findings into demand response programs for customers.
Publications	Fed by PIMS
Contractor	Department of Energy, Lawrence Berkeley National Laboratory
PIER Manager	David Michel III

This project is being conducted by the California Energy Commission's Public Interest Energy Research (PIER) program. PIER supports energy research and development that improves the quality of life in California by bringing environmentally safe, affordable, and reliable energy services and products to the marketplace.

Dynamic Electricity Pricing and Demand Response

The Problem	This project provides information not previously available in the public domain on issues arising from implementing dynamic pricing in a non-vertically-integrated electricity industry structure, as California is currently attempting. These issues include: the regulatory context and process for adopting dynamic pricing, the degree of customer price response that policymakers can expect, the relative contributions of real-time-pricing and demand response (DR) programs in encouraging DR, and the factors that influence customers price responsiveness.
Proposed Research	This project summarizes experience with dynamic pricing electricity tariffs and demand response (DR) programs to inform policy in California. It assesses the effectiveness of DR-enabling technologies, tariffs and programs, through two areas of study: a case study of large commercial and industrial response to real-time-pricing in New York, and a survey of regulatory and policy experience in U.S. states that have implemented real-time-pricing as part of the default utility service in the context of retail competition.
Research Results	An important finding of this study is that day-ahead hourly pricing encourages demand response (DR), as long as customers have alternative options. Large customer price response is currently modest overall, with substantial variation between market segments. DR programs complement real-time-pricing, providing additional DR during system emergencies. These findings provide important insights to California policymakers, utilities, and stakeholders charged with designing tariff and program options for large customers that maximize DR benefits while addressing customer needs.
Research Justification and Goals	Supports California's goal to implement much more comprehensive demand response programs per the Integrated Energy Policy Report 2004 Update; and to make progress achieving demand reduction and electricity savings per the Integrated Energy Policy Report 2003 by: • Estimating aggregate price response of large customers exposed to real time pricing (RTP) so policymakers know how much demand response (DR) to expect. • Estimating disaggregated price response results by customer market segment, so that policymakers can identify which customers are most price-responsive. • Evaluating the relative roles of dynamic pricing and DR programs in encouraging DR so that policymakers can make informed program adoption decisions. • Identifying information needs for quantifying the amount of DR that policymakers and the Independent System Operator can expect from dynamic pricing. • Determining the policy context and process for implementing RTP in other states and identifying lessons learned for California policymakers and stakeholders.
Publications	Fed by PIMS
Contractor	Department of Energy, Lawrence Berkeley National Laboratory
PIER Manager	David Michel III

This project is being conducted by the California Energy Commission's Public Interest Energy Research (PIER) program. PIER supports energy research and development that improves the quality of life in California by bringing environmentally safe, affordable, and reliable energy services and products to the marketplace.

CERTS-Microgrid Laboratory Test Bed

The Problem	Micro-grid are an innovative approach to migrating California distribution system to the next generation where distributed generation and demand response are integrated to the distribution system design and operation. Microgrids are created by the interconnection of small, modular generation sources to low voltage distribution systems. They can be operated in parallel or islande from the distribution system.
Proposed Research	The purpose of this project is to 1) develop reliability-related technical requirements and technologies necessary for large-scale distributed energy resources (DER) penetration of microsources in the grid, and 2) develop standards for microsources and converters to supply microgrids economically, and safely. This will involve a cluster of loads and microsources supporting transmission as a single controllable system that provides power and heat to its local area and supports transmission and distribution reliability.
Research Results	The tests bed design and microgrid hardware including modified distributed generators has been completed. Testing will begin in second quarter 2006.
Research Justification and Goals	Supports California's goal to enable consumers and businesses to supply their own generation through the deployment of distributed generation and cogeneration per the Integrated Energy Policy Report 2003; and to promote clean, small generation resources located at load centers per the Energy Action Plan 2003 by: • Reducing grid loses and increasing kilowatt injection on the distribution system • Integrating distributed generation and demand response load control into a single controlable unit. • Increasing the use of renewable distributed energy sources and by multiplying the number of generators. • Using distributed energy resources to improve power quality and reduce the effect of power failure on the grid.
Contractor	Department of Energy, Lawrence Berkeley National Laboratory
Site Location	Berkeley, CA
PIER Manager	Bernard Treanton

This project is being conducted by the California Energy Commission's Public Interest Energy Research (PIER) program. PIER supports energy research and development that improves the quality of life in California by bringing environmentally safe, affordable, and reliable energy services and products to the marketplace.

Reflective Energies

The Problem	Distributed Generation (DG) in California has expanded over the last few years, but in order to reap the full benefits that DG can provide several issues need to be resolved including issues relating to interconnection and grid impacts on the electrical distribution system. Several of the new DG and interconnection technologies show great promise, but are often not fully tested or understood.
Proposed Research	The purpose of this project is to provide a program of monitoring, data collection, analysis, and reporting for selected distributed generation (DG) systems chosen for their diversity in relation to generation, the distribution grid, and customer impact concerns. Through this project, information will be disseminated to the Interconnection Workgroup (an industry workgroup), customers, utilities, manufacturers, government and others in the interest of simplifying future interconnections, which will help reduce costs.
Research Justification and Goals	Adds a project to the Commissions research portfolio that addresses key technical and scientific barriers as mandated by the Warren-Alquist Act; and supports California's goal to promote customer and utility owned distributed generation per the Energy Action Plan 2003 by: • Characterizing the electrical effects of DG on the distribution system. • Evaluating whether Revised Rule 21 has improved the process of the interconnection of DG to the electrical system. • Assessing the potential for simplifying Rule 21 further to expand the types of different applications eligible for a "simplified interconnection". • Determining the power quality and reliability impacts of DG units on the distribution system. • Assessing the cost-effectiveness of interconnecting DG units under the new Rule 21 guidelines.
Contractor	Reflective Energies
PIER Manager	Jose Palomo

This project is being conducted by the California Energy Commission's Public Interest Energy Research (PIER) program. PIER supports energy research and development that improves the quality of life in California by bringing environmentally safe, affordable, and reliable energy services and products to the marketplace.

Universal Interconnect Device-Northern

The Problem	Distributed generation technologies currently require a variety of interconnection devices to connect to California's power grid. The development of a universal advanced control device for these distributed energy resource techologies will reduce grid interconnection cost and time.
Proposed Research	The purpose of this project is to develop and test a prototype Advanced Universal Interconnect Device that is interoperable across distributed generation (DG) technologiesand has enhanced functionality that will reduce interconnection cost and time. Northern Power System (NPS) will develop the specification for the DG interface system using input from industry experts in the field of protection relaying and anti-islanding. NPS will also review and model various synchronization methods and use its digital signal processing control hardware software platform. Upon successful testing, a prototype unit will be shipped to National Renewable Energy Laboratory for Institute of Electrical and Electronics Engineers 1547 compliance testing.
Research Results	The prototype has been completed and sent for testing at National Renewable Energy Laboratory for compliance with national interconnection standards .
Research Justification and Goals	Supports California's goal to promote customer and utility owned distributed generation per the Energy Action Plan 2003; and to enable consumers and businesses to supply their own generation through the deployment of distributed generation and cogeneration per the Integrated Energy Policy Report 2003 by: • Developing and standardizing a new electro-mechanical universal interconnect device that interconnects the generator to the grid. • Improving distributed energy resources (DER) reliability to support the grid. • Developing advanced electronics to control DER and grid interconnection.
Contractor	National Renewable Energy Laboratory (NREL)
Site Location	Waitsfield, VT
PIER Manager	Bernard Treanton

This project is being conducted by the California Energy Commission's Public Interest Energy Research (PIER) program. PIER supports energy research and development that improves the quality of life in California by bringing environmentally safe, affordable, and reliable energy services and products to the marketplace.

Innovative Ratemaking Treatment for DER-Synapse

The Problem	Given California preference for distributed generation (DG), traditional cost of service utility ratemaking practices do not appropriately account for the spatial or temporal benefit of DG. New approaches to ratemaking are needed at this stage of electric power system review and transformation to make rates more equitable.
Proposed Research	The purpose of this project is to develop innovative concepts and methods for ratemaking treatment of distributed generation (DG). This project will permit California, utilities, and other interested parties to build upon a solid basis of policy analysis and recommendations. The contractor will develop a framework for understanding the many issues that must be addressed in ratemaking for DG. The contractor will interview key stakeholders and summarize the primary concerns for various interest groups that include utilities, DG manufacturers, suppliers and regulators. The contractor will develop new concepts in ratemaking, tariff design, and policy recommendations regarding appropriate rate treatment of DG.
Research Results	Final report has been completed and will be published in the first quarter of 2006.
Research Justification and Goals	Supports California's goal to enable consumers and businesses to supply their own generation through the deployment of distributed generation and cogeneration per the Integrated Energy Policy Report 2003; and to determine system benefits of distributed generation and related costs per the Energy Action Plan 2003 by: • Developing new, justifiable and equitable ratemaking treatment for distributed generation.
Contractor	National Renewable Energy Laboratory (NREL)
Site Location	Cambridge, MA
PIER Manager	Bernard Treanton

This project is being conducted by the California Energy Commission's Public Interest Energy Research (PIER) program. PIER supports energy research and development that improves the quality of life in California by bringing environmentally safe, affordable, and reliable energy services and products to the marketplace.

SF Coop DER Regional Solutions Project

The Problem	Over the past ten years, numerous case studies and analyses have been conducted to determine the potential value of Distributed Energy Resources (DER) to the generation, transmission, and distribution systems. However, past theoretical studies have been of limited value to utilities, and regulators. Quantifying DER value still remains one of the key barriers to DER adoption. This research project provides a "test-bed" for actual DER implementations, supported by a rigorous analysis to examine the customer, social, and system costs and benefits.
Proposed Research	This research will include an investigation of the costs, benefits and cost-effectiveness of Distributed Energy Resources (DER) options for customers, utilities and society, as well as the technical issues uncovered during the process. One major attribute of this study is looking at how DER affects the load profile on a specific PG&E distribution system feeder. The results will be reported appropriately for a number of audiences, including utilities, governments, energy consumers and other stakeholders interested in making informed decisions about DER programs.
Research Justification and Goals	Supports California's goal to determine system benefits of distributed generation and related costs per the Energy Action Plan 2003; and to make progress achieving demand reduction and electricity savings per the Integrated Energy Policy Report 2003 by: • Objectively assessing the costs and benefits of DER initiatives to relieve congestion on San Francisco's transmission and distribution network. • Identifying and testing DG solutions that can help to lower peak demand and minimize the need for new investments in transmission, distribution, and generation facilities. • Encouraging energy conservation, demand response, and the appropriate development of low-impact, environmentally friendly, DG facilities.
Contractor	M.Cubed
PIER Manager	Linda Kelly

This project is being conducted by the California Energy Commission's Public Interest Energy Research (PIER) program. PIER supports energy research and development that improves the quality of life in California by bringing environmentally safe, affordable, and reliable energy services and products to the marketplace.

DER Partnership Interconnection and Market Integration

The Problem	Distributed generation has the potential to significantly transform the relationship of utilities and customers, and to introduce a much richer set of tools for providing not only power, but also reliability, security, flexibility and power quality in energy systems. With strong support and incentives, distributed generation could account for a significant portion of total electricity generation in the US by 2020. However, to accomplish this, approaches must be used where cost and benefits to all stakeholders are evaluated and balanced so that there are net societal benefits.
Proposed Research	The purpose of this project is to assist Southern California Edison (SCE) through a collaborative process to develop a solicitation for distributed generation projects that could defer utility distribution upgrades. A goal of this project is that all participants will benefit from the process developed.
Research Results	This project has been extended to include additional post-solicitation lessons learned which will be published and posted by June 2006. A draft report has been published that describes the collaborative process used between Southern California Edison (SCE) and the distributed generation industry, and reports on the results of the collaboratively structured solicitation and planned operating agreement. SCE is currently seeking the Public Utilities Commission's approval of their proposed solicitation. Pending that approval, SCE will issue the solicitation and execute agreements with winning bidders whose distributed generation solutions can help SCE defer distribution upgrade projects.
Research Justification and Goals	Supports California's goal to create a transparent electricity distribution system planning process that addresses the benefits of distributed generation per the Integrated Energy Policy Report 2003; and to enable consumers and businesses to supply their own generation through the deployment of distributed generation and cogeneration per the Integrated Energy Policy Report 2003 by: • Developing win-win approaches for encouraging distributed energy resources. • Encouraging distributed energy resource (DER) market integration that simplifies consumer installations. • Develop a successful solicitation for Southern California Edison where customer-owned generation is used to cost effectively defer a utility distribution upgrade.
Publications	DER Stakeholder Collaboration at work: Shaping DER Procurement in California ==>http://www.energy.ca.gov/2005publications/CEC-500-2005-062/CEC-500-2005-062-D.PDF Presentation: Shaping a California DER Procurement though Stakeholder Collaboration ==>http://www.energy.ca.gov/distgen_oii/documents/2005-04-29_workshop/EPRI_Petrill_042905.PD
Contractor	Electric Power Research Institute (EPRI)
PIER Manager	Mark Rawson

This project is being conducted by the California Energy Commission's Public Interest Energy Research (PIER) program. PIER supports energy research and development that improves the quality of life in California by bringing environmentally safe, affordable, and reliable energy services and products to the marketplace.

Service-Based Universal Application Interface for Demand Response Energy Systems

The Problem	Ad hoc wireless sensor and actuator networks have the potential of dramatically influencing the field of automated control and management. Such networks may someday be a component of the California demand response infrastructure located at the residential, commercial, or industrial premise. There is not a standardized method to develop applications software that can shield the application programmer from the intricacies and details of the underlying hardware architecture. Without standardized methods, application software will need costly rewrites for different hardware architectures.
Proposed Research	The research objective of this project is to develop and demonstrate an application software development environment for ad-hoc wireless sensor and actuator networks that will result in application software solutions that are easily portable over a variety of implementation platforms and extendible in terms of functionality and complexity; thus reducing the cost of software development and software maintenance of ad-hoc wireless sensor and actuator networks. Lower cost ad-hoc wireless sensor and actuator networks have the potential of providing a low cost, reliable, and secure component of the California Demand Response infrastructure at the energy end-users' premise.
Research Justification and Goals	Supports California's goal to accelerate its implementation of demand response programs that signal the actual price of electricity to customers during peak demand periods per the Integrated Energy Policy Report 2004 Update; and to make progress achieving demand reduction and electricity savings per the Integrated Energy Policy Report 2003 by: • Developing a software interface that will reduce software development and maintenance costs of ad hoc wireless sensors and actuators networks deployed for demand response. • Demonstrating prototypes of the software interface with demand response applications developed by another PIER funded project.
Contractor	The Regents of the University of California - Office of the President/CIEE
Site Location	Oakland, CA
PIER Manager	David Michel III

This project is being conducted by the California Energy Commission's Public Interest Energy Research (PIER) program. PIER supports energy research and development that improves the quality of life in California by bringing environmentally safe, affordable, and reliable energy services and products to the marketplace.

California Demand Response Business Network

The Problem	Utility information and business systems are historically proprietary and integrating the systems together has been challenging and costly. A fully integrated system is required to implement demand response in California and potentially support millions of electricity customers in California. A well architected real-time distributed business (collaboration) network, based on open standards and leveraging Internet technologies, will reduce the cost and complexity barriers of integrating systems to support demand response.
Proposed Research	The research objective of this project is to think through, conceptualize, design, and demonstrate a suitable real-time demand response business network for California to facilitate and maximize demand response resources within the State. The project intends to utilize modern business process management and Internet technologies, and open system standards to achieve the research objective. This project is composed of two phases. The first is a conceptual and design phase and the second a demonstration phase.
Research Results	The initial conceptual and design phase was completed in May 2005. An architecture for the California Demand Response Business Network (DRBizNet) was developed and documented. The concepts of the architecture was presented and demonstrated in a public workshop in April 2005. The architecture was well received by the CAISO and the three investor owned utilities in California. The CAISO and the utilities put their support in continuing the project into the next phase, a field demonstration of DRBizNet. Their support includes allocating their own resources to participate in the field demonstration.
Research Justification and Goals	Supports California's goal to accelerate its implementation of demand response programs that signal the actual price of electricity to customers during peak demand periods per the Integrated Energy Policy Report 2004 Update; and to make progress achieving demand reduction and electricity savings per the Integrated Energy Policy Report 2003 by: • Demonstrating the demand response business network in a field simulation involving participation from the CAISO, the three major utilities, and select voluntary customers. • Conceptualizing and designing a real-time demand response business network for California that will reduce integration cost of systems utilized for demand response.
Contractor	The Regents of the University of California - Office of the President/CIEE
PIER Manager	David Michel III

This project is being conducted by the California Energy Commission's Public Interest Energy Research (PIER) program. PIER supports energy research and development that improves the quality of life in California by bringing environmentally safe, affordable, and reliable energy services and products to the marketplace.

Network Security Architecture

The Problem	One important issue with any future demand response infrastructure network is security. With the possibility that the network may be collecting a large amount of fine resolution data from energy consumers, another issue that must also be considered is privacy. However, sometimes, security issues and privacy concerns may be in conflict with each other. Security architecture design as well as the system architecture design of the demand response infrastructure must take into consideration privacy issues. Otherwise the infrastructure may require a costly re-design and/or re-deployment if privacy concerns become a liability for the operation of the infrastructure.
Proposed Research	The research objective of this project is to develop the basis for an overall network security architecture in the context of demand response systems. The architecture will address all levels of a demand response network from the utility network, to the wide area network, and to the local area network located at the end-user premise. However, this project will focus primarily at the local area network level and in particular focus on sensor networks; an area in which little security research has been conducted. Additionally, the research will take into account privacy issues in developing the architecture.
Research Justification and Goals	Supports California's goal to accelerate its implementation of demand response programs that signal the actual price of electricity to customers during peak demand periods per the Integrated Energy Policy Report 2004 Update; and to make progress achieving demand reduction and electricity savings per the Integrated Energy Policy Report 2003 by: • Developing a cohesive network security architecture that will lead to demand response networks that are designed with consideration for security and privacy. • Identifying and categorizing security concerns and threats that can arise in the context of sensor networks that consist of devices having limited power and computing power. • Identifying and developing strategies, algorithms, and a roadmap to address the security concerns.
Contractor	The Regents of the University of California - Office of the President/CIEE
PIER Manager	David Michel III

This project is being conducted by the California Energy Commission's Public Interest Energy Research (PIER) program. PIER supports energy research and development that improves the quality of life in California by bringing environmentally safe, affordable, and reliable energy services and products to the marketplace.

New Thermostat, New Temperature Node, and New Meter

The Problem	Current electric meters are of either the electromechanical type or the solid state type. Neither type supports dynamic tariffs. Newer solid state meters with communications are too costly for wide spread deployment. Adding communications to existing solid state thermostats for receiving price signals and adjusting the setpoint also is too costly for wide spread deployment. Research is needed to develop new technologies that can support dynamic tariffs and make Demand Response implementation cost effective.
Proposed Research	The research objective of this project is to leverage existing research funded by the Department of Defense and private industry and develop enabling technologies such as ad hoc wireless self organizing sensor networks, sensors utilizing Micro-Electro-Mechanical Systems (MEMS) technology, and adaptive comfort control algorithms for the basis of new reference designs for sensors, meters and thermostats that will make the Demand Response (DR) infrastructure very cost-effective and compatible with legacy systems. The research has the potential of reducing statewide DR implementation costs by a factor of 10 while at the same time increasing functionality also by a factor of 10.
Research Results	The research team has developed individual macro-level, proof-of-concept devices such as low power radios, energy scavenging power supplies, and real-time operating systems for ad hoc self-organizing sensor networks. The team has also developed prototypes of residential real-time meters, demand response enabled thermostats, and remote wireless temperature sensors. Other developments include demand response related simulation software, adaptive control strategies, optimizing cost-to-comfort algorithms, and user interfaces. Research results have been presented at formal annual public workshops.
Research Justification and Goals	Supports California's goal to accelerate its implementation of demand response programs that signal the actual price of electricity to customers during peak demand periods per the Integrated Energy Policy Report 2004 Update; and to make progress achieving demand reduction and electricity savings per the Integrated Energy Policy Report 2003 by: • Researching and developing new reference designs for sensors, meters and thermostats that will make the Demand Response infrastructure cost-effective in California. • Researching and developing to increase functionality and reduce cost of the enabling technology components for the new reference designs.
Contractor	The Regents of the University of California - Office of the President/CIEE
PIER Manager	David Michel III

This project is being conducted by the California Energy Commission's Public Interest Energy Research (PIER) program. PIER supports energy research and development that improves the quality of life in California by bringing environmentally safe, affordable, and reliable energy services and products to the marketplace.

High Temperature Low Sag Conductor Test I

The Problem	In recent years, conductor manufacturers have produced new, nontraditional conductors (i.e., transmission-line wires) capable of operating at temperatures as high as 250 degrees Celsius (482˚F) without violating present electrical clearances to ground and other objects. While these conductors have passed most industry standard tests for performance, utilities are wary of installing these yet unproven technologies without having first gained an insight into their performance in a real-world setting.
Proposed Research	Evaluate and document the performance of selected "high-temperature, low-sag" conductors (i.e., transmission-line wires) that are capable of significantly increasing the ampacity (power carrying capacity) of thermally constrained transmission lines without the need for extensive tower redesign. This project will compare the performance of the following types of conductors: Invar, Gap, ACCC, and commercial forms of aluminum steel-supported conductors (ACSS).
Research Justification and Goals	Adds a project to the Commissions research portfolio that has the potential to enhance transmission and distribution capabilities as mandated by the Warren-Alquist Act; and supports California's goal to upgrade and expand the electricity transmission and distribution infrastructure per the Energy Action Plan 2003 by: • Enhancing the capabilities of the State's transmission and distribution system by increasing throughput over existing corridors. • Relieving congestion and allowing for operation by increasing the thermal limits and high temperature performance of transmission-line wires/conductors.
Contractor	Electric Power Research Institute (EPRI)
Site Location	San Diego, CA
PIER Manager	Jamie Patterson

This project is being conducted by the California Energy Commission's Public Interest Energy Research (PIER) program. PIER supports energy research and development that improves the quality of life in California by bringing environmentally safe, affordable, and reliable energy services and products to the marketplace.

Center for the Study of Electricity Markets

The Problem	Government and non-government policy makers charged with assessing how competitive markets can be created and sustained need access to up-to-date research on reliability and adequacy of supply; retail competition and demand side price response; market design and efficiency; market power mitigation tools, and interactions of electricity markets and environment regulations.
Proposed Research	The purpose of the Center for the Study of Energy Markets (CSEM) is to undertake market performance research on reliability and adequacy of supply; retail competition and demand side price response; market design and efficiency; market power mitigation tools, and interactions of electricity markets and environment regulations. CSEM will contribute a diverse array of products useful to decision-makers and the market alike.
Research Results	The Center for the Study of Energy Markets (CSEM) is functioning as intended, with a number of short-term visiting and permanent personnel developing research papers, making presentations at research conferences, and preparing policy overview papers. These were "published" on the University of California, Energy Institute website under the CSEM Working Paper Series. The core UCEI personnel have conducted a number of outreach activities – multi-day training courses, policy conferences, and are laying the ground work for a newsletter.
Research Justification and Goals	Supports California's goal to make progress achieving demand reduction and electricity savings per the Integrated Energy Policy Report 2003; and to restore investor and private sector confidence in California's energy markets per the Energy Action Plan 2003 by: • Assessing major market structure and performance issues which influence the commercialization and adoption of energy technologies.
Publications	Fed by PIMS
Contractor	University of California, Energy Institute; Center for the Study of Energy Markets
PIER Manager	Mike Jaske

This project is being conducted by the California Energy Commission's Public Interest Energy Research (PIER) program. PIER supports energy research and development that improves the quality of life in California by bringing environmentally safe, affordable, and reliable energy services and products to the marketplace.

Demonstration of Intelligent Software Agents for Control &Scheduling of Distributed Generation

The Problem	California energy consumers and owners of distributed generation resources have the capability to participate in a dynamical priced energy market based on up-to-the-minute demand information with the help of intelligent software agents (Smart*DER technology). This technology is able to make decisions and take actions based on prior consumer input; interact with other agents and communicate through messages and behaviors with other agents to achieve individual objectives and to manage inter-dependencies; forecast, be pro-active, and act in anticipation of trends. However, a demonstration of this technology is needed to gain the confidence of energy consumers and distributed generation resource owners.
Proposed Research	The purpose of this project is to demonstrate that intelligent software agents (Smart*DER technology) can provide facility managers an integrated and automated solution for demand response or distributed generation dispatch. These software agents respond to price signals and alerts and then automatically calculate the most economic solution: load reduction, on site generation, or a combination of both. These software agents can also bid unused resources into an energy market and can coordinate responses across geographically separate sites through the use of the internet for communication.
Research Justification and Goals	Supports California's goal to enable consumers and businesses to supply their own generation through the deployment of distributed generation and cogeneration per the Integrated Energy Policy Report 2003; and to accelerate its implementation of demand response programs that signal the actual price of electricity to customers during peak demand periods per the Integrated Energy Policy Report 2004 Update by: • Providing dynamic pricing incentives to reduce electricity consumption precisely during those hours when supplies are tight. • Providing lower prices when wholesale prices are low. • Integrating real-time pricing information technology into the energy business. • Creating new markets for communications, microelectronic controls. • Enabling greater participation by owners of distributed energy resources through use of intelligent software agents to perform demand response for curtailable loads. • Enabling greater participation by owners of distributed energy resources through use of intelligent software agents for control and scheduling of distributed generation. • Reducing distribution system congestion and distribution line losses. This project also addresses SENATE BILL NO. 1976 (Chapter 850, Statutes of 2002).
Contractor	Alternative Energy Systems Consulting, Inc.
Site Location	Carlsbad, CA
PIER Manager	Jamie Patterson

This project is being conducted by the California Energy Commission's Public Interest Energy Research (PIER) program. PIER supports energy research and development that improves the quality of life in California by bringing environmentally safe, affordable, and reliable energy services and products to the marketplace.

ESI Projects Completed in 2005

Sagging Line Mitigator (SLiM) Full Scale Demonstration

The Problem	High ambient temperature and peak demand current flows can cause transmission lines to sag dangerously low to the ground. Thus excessive transmission line sag is one of the most prevalent causes for limiting the amount of power that can flow through a line. Instead of replacing existing lines, the problem of sag can be addressed by installing the Sag Line Mitigator which pulls existing lines up to compensate for excessive line sag. A demonstration of this technology is needed before large scale adoption of this solution can go forward.
Proposed Research	The Sagging Line Mitigator (SLiM) is a new class of transmission line hardware that fixes the problem of transmission line-to-ground clearance sag by reducing excessive line sag at just the right time. This project will evaluate the performance of the Sagging Line Mitigator (SLiM) on an operating transmission line.
Research Results	The Sagging Line Mitigator (SLiM) was installed on a San Diego Gas and Electric (SDG&E) 69kV transmission line in Escondido and demonstrated to determine its functionality and reliability. For a more complete accounting of project results please go to:
Research Justification and Goals	Supports California's goal to improve the bulk electricity transmission grid and distribution facility infrastructure to support growing demand centers and the interconnection of new generation per the Energy Action Plan 2003; and to strengthen its energy infrastructure per the Integrated Energy Policy Report 2003 by: • Installing the SLiM device on an operating transmission line to demonstrate its functionality and reliability. • Providing participating utilities with first-hand information on the operational performance of this new kind of line hardware device. • Compiling practical "engineering-type" information that will position participating utilities as informed buyers and users of this new technology. This project also addresses Public Resources Codes 25620.1.(c)(3).
Publications	Sagging Line Mitigator Final Report ==>http://www.energy.ca.gov/pier/esi/esi_reports.htm
Contractor	Electric Power Research Institute (EPRI)
Site Location	Berkeley, CA
PIER Manager	David Chambers

This project is being conducted by the California Energy Commission's Public Interest Energy Research (PIER) program. PIER supports energy research and development that improves the quality of life in California by bringing environmentally safe, affordable, and reliable energy services and products to the marketplace.

Development of a Real-Time Monitoring/Dynamic Rating System for Overhead Lines

The Problem	The stated capacity of many existing transmission lines is based on very conservative assumptions of weather conditions to maintain the minimum ground clearances specified in safety codes. The development of a sensor system that determines the actual ground clearances of transmission lines would allow safe utilization of the hidden capacity of existing lines providing extensive economic and environmental benefits.
Proposed Research	The purpose of this project is to develop a practical, user-friendly and cost effective transmission-line monitoring system. This real-time monitoring/dynamic rating system for overhead transmission lines will have sensors for monitoring ground clearances/sags in selected transmission line spans on a real-time basis. The system will then use the data collected to model the clearances/sags in all spans in order to provide a real-time dynamic rating.
Research Results	Successfully completed design, development and analysis of the Saggometer Sensor System. The Saggometer Sensor System performed real-time monitoring and dynamic rating of lines. Developed a real-time rating software module (PLS-CADD).
Research Justification and Goals	Supports California's goal to improve the bulk electricity transmission grid and distribution facility infrastructure to support growing demand centers and the interconnection of new generation per the Energy Action Plan 2003; and to identify cost-effective projects that would increase transfer capability between the transmission system in the CA ISO control area and the three other California control areas per the Integrated Energy Policy Report Update 2004 by: • Develop a practical, user-friendly and cost-effective transmission-line monitoring system with the flexibility and features needed to work with existing and state-of-the-art transmission systems • The goal for the line rating software design was to enable the system to be used by transmission system operators, IOUs and the CAISO for three purposes: - Perform real-time monitoring and dynamic rating of lines. - Conduct studies to evaluate the performance of existing lines and to re-rate their capacity. - Monitor the status of clearances and sags in "safety critical" areas. • Monitoring transmission line-to-ground clearance thereby avoiding an electrical shock hazard. This project also addresses Public Resources Codes 25620.1.(c)(3).
Publications	Fed by PIMS
Contractor	Engineering Data Management, Inc.
Site Location	Fort Collins, CO
PIER Manager	David Chambers

This project is being conducted by the California Energy Commission's Public Interest Energy Research (PIER) program. PIER supports energy research and development that improves the quality of life in California by bringing environmentally safe, affordable, and reliable energy services and products to the marketplace.

Development/Demonstration of Methodology to Assess Value of DER

The Problem	From a systemwide perspective, it is difficult to identify where demand response and distributed generation will optimize or improve electric system efficiency and performance. It may be possible to identify these locations with load flow tools traditionally used only for transmission networks and new non-linear optimization technologies that simultaneously consider multiple factors and provide repeatable results. Identifying the technical and operational attributes of these additions and characterizing them in both engineering and economic terms may provide utility planners with new information that will improve their understanding of where demand response programs and distributed generation will provide system benefits.
Proposed Research	The purpose of the project is to demonstrate an analytical methodology that can identify where distributed energy resources can provide specific transmission and distribution (T&D) network benefits. This methodology will evaluate multiple aspects of network performance including factors affecting stability and power quality in addition to T&D losses. The project will create a detailed and integrated dataset of a utility network that integrates both transmission and distribution.
Research Results	The first phase of this research was successfully completed and determined this approach is technically feasible. The research demonstrated an analytical methodology that identified where distributed energy resources can provide specific transmission and distribution (T&D) network benefits, and created a detailed and integrated dataset of a utility network that integrates both transmission and distribution. The second phase, under contract 500-04-008, has begun on a more complicated and larger utility system. The second phase will include a field demonstration and validation component that was not performed in the first phase.
Research Justification and Goals	Supports California's goal to create a transparent electricity distribution system planning process that addresses the benefits of distributed generation per the Integrated Energy Policy Report 2003; and to determine system benefits of distributed generation and related costs per the Energy Action Plan 2003 by: • Providing more choices to California consumers by helping overcome the barriers to the deployment of distributed energy resources. • Developing an analytical tool to identify DER and other non-wire alternatives locations helping alleviate power quality and T&D capacity and congestion problems in the State.
Publications	Optimal Portfolio Methodology for Assessing Distributed Energy Resources Benefits for the EnergynetTM ==>http://www.energy.ca.gov/pier/final_project_reports/CEC-500-2005-096.htm
Contractor	New Power Technologies
PIER Manager	Linda Kelly

This project is being conducted by the California Energy Commission's Public Interest Energy Research (PIER) program. PIER supports energy research and development that improves the quality of life in California by bringing environmentally safe, affordable, and reliable energy services and products to the marketplace.

Distributed Utility Integration Test "DUIT"

The Problem	The increasing potential of distributed energy resources in emerging utility markets has focused attention on two critical issues: interconnection of distributed energy resources with electric distribution systems, and the unknown nature of potential interactions between multiple distribution devices. Interconnection is a critical issue because of the diversity of distributed energy resource technologies and the variability of interconnection standards and practices from state to state and utility to utility. Another critical issue is that the potential for interactions between distributed resources in close proximity within a distribution system is not known, simply because not enough operating experience has been gained to date.
Proposed Research	The purpose of this project is to advance the state-of-the-art of distributed energy resource integration and give new insights into grid support issues. This Distributed Utility Integration Test (DUIT) is the next step in assuring safe, reliable, secure and cost-effective inclusion of distributed energy resources in electric systems of the future. By collaborating with Distributed Utility Associates, the Commission will strengthen its leadership role in distributed power. In examining current and emerging technologies and operational concepts to properly integrate diverse distributed energy resources, this project will give new insights into grid support issues and ultimately suggest innovative system protection design concepts.
Research Results	Results lead to a revision to the National Standard, UL1741. For further details, please refer to the Final Report listed under publications.
Research Justification and Goals	Supports California's goal to promote customer and utility owned distributed generation per the Energy Action Plan 2003; and to promote clean, small generation resources located at load centers per the Energy Action Plan 2003 by: • Determining what impact large numbers of distributed energy resources will have on the electrical system. • Advancing distributed energy resource technologies that will help diversify and strengthen the system. • Proving the feasibility and the integration of diverse distributed energy resources in a distribution system. • Providing a testing ground for observing and measuring the interactions between the distributed technologies on the distribution system.
Publications	DUIT Phase I Final Report ==>http://www.energy.ca.gov/reports/reports_500.htm
Contractor	Distributed Utility Associates
Site Location	San Ramon, CA
PIER Manager	David Michel III

This project is being conducted by the California Energy Commission's Public Interest Energy Research (PIER) program. PIER supports energy research and development that improves the quality of life in California by bringing environmentally safe, affordable, and reliable energy services and products to the marketplace.

Real Time Ratings for Sacramento Area

The Problem	The feasibility of implementing real time transmission line thermal ratings for a large multi utility area under normal system conditions needs to be demonstrated with the simultaneous mitigation of voltage constraints so that the benefits from this dual implementation can be linked.
Proposed Research	Demonstrate the feasibility of implementing real time thermal ratings in the Sacramento area. The Sacramento area was selected for this project because it one of the fastest growing and complicated transmission regions in California making it a perfect subject area for study. The area's largest transmission owners, PG&E, SMUD and WAPA, have identified several lines that are expected to overload in the near future, and this project will monitor these lines and the data will be archived for analysis.
Research Results	The evaluation of the thermal and voltage constraints in Sacramento areas was concluded on a reduced scope, due to the non participation of Sacramento Municipal Utility District (SMUD) and the resulting loss of data. Results obtained indicate substantial benefits from use of dynamic ratings, as well as future opportunities for increased contingency limits. The collected data has been archived and is available for future studies on line capability forecasting. Initial algorithms for ratings forecasts studies indicate that two separate algorithms are likely to be required, one for near-term operational use and another one for daily dispatch purposes.
Research Justification and Goals	Supports California's goal to identify cost-effective projects that would increase transfer capability between the transmission system in the CA ISO control area and the three other California control areas per the Integrated Energy Policy Report Update 2004 by: • Improving economic dispatch • Mitigating the voltage constraints in the Sacramento Area. This project also addresses PRC25620.1(c)(3) Includes projects that have the potential to enhance transmission and distribution capabilities..
Publications	SACRAMENTO AREA RATINGS ==>http://www.energy.ca.gov/pier/final_project_reports/CEC-500-2005-095.htm
Contractor	The Valley Group, Inc.
Site Location	Ridgefield, CT
PIER Manager	Jamie Patterson

This project is being conducted by the California Energy Commission's Public Interest Energy Research (PIER) program. PIER supports energy research and development that improves the quality of life in California by bringing environmentally safe, affordable, and reliable energy services and products to the marketplace.

Advanced Switches for Soft Blackouts

The Problem	Acts of terrorism against substations, power plants, and transmission line towers are a major threat to grid stability. The development and demonstration of remote controlled truck barriers and stopping devices that could be used to stop heavy duty trucks operating within power plants promises to greatly enhance grid security. In the event of a power outage, load reduction switches and their communication modules could turn off 240-volt appliances, while leaving on 120-volt circuits, traffic lights and streetlights, making electrical power outages much softer. However testing is needed before wide spread adoption of this technology can take place.
Proposed Research	The purpose of this project is to develop and test technologies that can help ensure the reliability of the electrical distribution system by improving the security of critical substations and power plants from heavy truck bombs, and by testing load reduction switches to minimize the negative impacts of planned power outages.
Research Results	The contract ended in March 2005, but the contractor has yet to provide a final report that complies with the terms of the contract.
Research Justification and Goals	Adds a project to the Commissions research portfolio that emphasizes innovative energy supply and end use technologies, focusing on their reliability, affordability, and environmental attributes as mandated by the Warren-Alquist Act; and supports California's goal to protect the public's health and safety and ensure our quality of life per the Energy Action Plan 2003 by: • Reducing the impact of rolling blackouts by allowing 120-volt appliances and public safety devices such as traffic lights to still operate through use of load reduction switches. • Hardening power plant security by reducing the threat of heavy duty truck bombs with remotely controlled truck stopping devices and security barriers.
Contractor	California State University, Chico Research Foundation
Site Location	Chico, CA
PIER Manager	Mark Rawson

This project is being conducted by the California Energy Commission's Public Interest Energy Research (PIER) program. PIER supports energy research and development that improves the quality of life in California by bringing environmentally safe, affordable, and reliable energy services and products to the marketplace.

California CHP Market Assessment

The Problem	The use of combined heat and power (CHP) systems in commercial, industrial, and other establishments could improve the efficiency of energy use by displacing fuel use for boilers while also displacing marginal, predominantly gas-fired, sources of electricity generation. Research needs to be done in order to help stakeholders understand the technical and economic potential of CHP in California, end-user drivers and adoption barriers, cost and benefits of incentives, and research and development needs.
Proposed Research	The purpose of this project is to quantify the potential contribution of combined heat and power (CHP) systems to the California energy mix, to define the key factors that influence end-user adoption, and to provide the Energy Commission with options for incenting CHP and the associated costs/benefits of each option to help shape policy discussions in future CHP workshops and stakeholder meetings.
Research Results	The findings for this report played in key role in identifying policy options and recommendations relative to CHP that were included in the 2005 Integrated Energy Policy Report. The project was completed and the final report has been published. The final report is available online.
Research Justification and Goals	Supports California's goal to determine system benefits of distributed generation and related costs per the Energy Action Plan 2003; and to enable consumers and businesses to supply their own generation through the deployment of distributed generation and cogeneration per the Integrated Energy Policy Report 2003 by: • Improving the reliability, quality, and sufficiency of California's electricity by performing analysis of economic feasibility and possible financial alternatives. • Connecting to near-term market applications by identifying key issues to effective • CHP deployment.
Publications	Assessment of California CHP Market and Policy Options for Increased Penetration ==>http://www.energy.ca.gov/pier/final_project_reports/CEC-500-2005-173.htm
Contractor	Electric Power Research Institute (EPRI)
Site Location	Palo Alto, CA
PIER Manager	Mark Rawson

This project is being conducted by the California Energy Commission's Public Interest Energy Research (PIER) program. PIER supports energy research and development that improves the quality of life in California by bringing environmentally safe, affordable, and reliable energy services and products to the marketplace.

CERTS Demand Response Amendment

The Problem	Whether a traditional utility load management asset can be re-positioned to become a real-time, system reliability asset that lowers costs and improves the functioning of competitive wholesale electricity markets needs to be further researched.
Proposed Research	Demonstrate that demand response can provide the ancillary service of spinning reserve generation for system contingencies in a manner that will be adopted by system operators by: 1. Building operator confidence regarding the value of demand response as an alternative to traditional approaches for providing spinning reserve. 2. Setting the technical basis for modifying reliability rules to allow utilization of demand response for spinning reserve. 3. Demonstrating and benchmarking statistically the reliability of large numbers of small responsive loads; comparing this to the current responsiveness of generation.
Research Results	1. Created a secure web-site provisioned to provide external, visibility of SCE SCADA data on feeder load in real-time (at SCADA scan rate) to CA ISO and members of TAC, which includes representatives from relevant WECC committees and all CA IOUs 2. Installed ~300 A/C load control devices (target is 500-600) 3. Filed an Advice Letter with CPUC to enable full range of planned tests for Summer 2006 4. Conducted a first, shake-down test of the system on October 13, 2005
Research Justification and Goals	Supports California's goal to implement much more comprehensive demand response programs per the Integrated Energy Policy Report 2004 Update by: • Demonstrating a real-time information and control system which responds to supply-side problems, using load as a resource. • Reducing service interruptions through a rational utilization of the existing infrastructure to implement a significant DR capability in residences.
Publications	"Demand-Response Research Plan to Reflect the Needs of the California Independent System Operator." February 2004. ==>http://www.energy.ca.gov/pier/final_project_reports/500-04-023.html Development and Evaluation of Fully Automated Demand Response in Large Facilities by M. A. Piette, O. Sezgen, D. S. Watson, N. Motegi, and C. Shockman. CEC 500-2005-013. January 2005. ==>http://www.energy.ca.gov/pier/final_project_reports/CEC-500-2005-013.htm
Contractor	Department of Energy, Lawrence Berkeley National Laboratory
Site Location	Berkeley, CA
PIER Manager	Laurie ten Hope

This project is being conducted by the California Energy Commission's Public Interest Energy Research (PIER) program. PIER supports energy research and development that improves the quality of life in California by bringing environmentally safe, affordable, and reliable energy services and products to the marketplace.

The IntelliGrid Consortium (formerly CEIDS: Consortium for Electric Infrastructure to support a Digital Society)

The Problem	The current power delivery system, built with 1950s technology, cannot meet the needs of the future digital society. The automated, self-healing power delivery system of the future has long been a vision of the electricity sector. The events of 9/11 and the East Coast blackout of August 14, 2003 increased the pressure to implement a plan to develop the open, standards-based architecture necessary for a truly reliable and secure grid. This consortium of utilities, regulators, government and vendors provides a forum for this critical, multi-year effort to achieve the long-term transformation of the power delivery system.
Proposed Research	The partnership between the California Energy Commission and the IntelliGrid Consortium works toward actively developing a strategic framework to upgrade the electrical delivery system. The Energy Commission served as one of the partners of the IntelliGrid Consortium. The 2005 research focused on technical development, application, and outreach and coordination with other research activities.
Research Results	PIER participated in this collaborative effort for a second year. Energy Commission participation ended December 31, 2005. During 2005, advancements were made in the foundational technologies of computing and communications. Computing capabilities to enable a self-healing power grid were advanced in fast simulation and modeling for transmission and distribution. To enable two-way communications between electricity providers and the consumer, advancements were made in the development of a consumer portal. These advancements will be put to use by Southern California Edison in development of its Advanced Metering Infrastructure to enable demand response. => http://www.epri.com/IntelliGrid
Research Justification and Goals	Supports California's goal to allocate and prioritize RD&D funding for energy efficiency and demand response, including new communication and control technologies, planning models, end-use technologies, and validation methodologies per the Energy Action Plan 2005; and adds a project to the Commissions research portfolio that has the potential to enhance transmission and distribution capabilities as mandated by the Warren-Alquist Act by:m • Developing of business cases for the new functionalities of the power delivery system of the future. • Identifying new science and technology developments needed for the power delivery system of the future.
Contractor	Electric Power Research Institute (EPRI)
PIER Manager	Laurie ten Hope

This project is being conducted by the California Energy Commission's Public Interest Energy Research (PIER) program. PIER supports energy research and development that improves the quality of life in California by bringing environmentally safe, affordable, and reliable energy services and products to the marketplace.

ESI Projects Completed in 2004

2 kWhr Flywheel Energy Storage System

Contract #: 500-98-036
Contractor: Trinity Flywheel Power Corp
Contract Amount: $1,057,406
Match Amount: $1,062,494
Contractor Project Manager: Melissa Reading (925) 455-7998
Commission Contract Manager: Jamie Patterson (916) 657-4819
Status: Completed

Project Description:
AFS Trinity Power Corporation has completed its PIER contract in February, 2004 for a Flywheel Energy Power System as documented in final report #500-04-014 titled *Flywheel Energy Storage System*. The overall goal of this project was to identify the key performance elements of an advanced flywheel power system that can perform load following for a distributed generation system. The product demonstrated in this contract is a 100 kilowatt (kW) flywheel power system that delivers power for 15 seconds. Prototypes of this system have been constructed, and tested. As a result of this effort, the key performance elements were identified and demonstrated. The demonstrated system shows good commercial potential, and the results of this project are being used by AFS Trinity to continue with additional development work to make the commercial product more responsive to the marketplace. The company is also seeking new equity investment to complete the steps to a full commercial product launch.

During this contract, AFS Trinity also learned much about the commercial application requirements for this product. The project started in 1998 with the goal of producing an energy storage flywheel that could be used with a residential photovoltaic system for load-shifting energy storage. As the project progressed, AFS Trinity and the Commission realized that this market application had a very low probability of commercial success and decided to shift to a more commercially viable application; that of supporting the increased market penetration of distributed generation systems. The project goal was changed to produce a high power, short duration flywheel power system with applications in distributed generation and power management. Development was then completed for this market application. A successful demonstration of the AFS Trinity flywheel technology to support this application was also completed.

Benefits to California:
The results of the research and demonstrations completed in this project have demonstrated that flywheel power systems can create both economic and environmental benefits for the State of California. Successfully fielded commercial flywheel technology will reduce business losses from power disturbances and increase industrial energy efficiency.

Environmental benefits include air quality improvements and reductions in solid waste generation. As a battery replacement in distributed utility applications, or in the existing commercial UPS market, flywheel technology can directly eliminate environmentally unfriendly batteries systems from the solid waste stream.

With further testing, development and customer acceptance, the AFS Trinity flywheel power system can successfully complete the transition to a commercial product. It serves as an excellent example of the successful collaboration between government and industry.

This project supports the PIER Program objectives of:

- Improving the reliability of California's electricity system by developing a distributed-generation-enabling flywheel energy storage system technology that permits distributed generation technologies to be more easily integrated into the utility grid.

- Reducing environmental risks from California's electric system by providing a more environmentally friendly energy storage technology and enabling the increased use of environmentally responsive renewable distributed generation technologies.

Proposed Outcomes:

1. The technological objectives of this project are to:
   - Produce a 2 kWh Flywheel Motor Generator.
   - Use magnetic bearings instead of ceramic bearings.
2. The performance objectives of the flywheel energy storage system are:
   - Usable storage up to 2 kWh.
   - Maximum output power greater than or equal to 5kW.
   - A rated output of 2kW.
3. The economic objective of this project is to:
   - Have a production cost of $30,000/kWh, or less, for production volumes of one to ten units.

Actual Outcomes:

During this effort, AFS Trinity Power has achieved several significant milestones that have advanced the state of flywheel technology and moved closer to a commercially viable flywheel power system. These achievements were:

1. Achieved the following technological objective:
   - Produce a 420 kWh Flywheel.
   - Integration of active magnetic bearings.
2. Achieved the following performance objectives:
   - Highest energy density and power density of any commercially available flywheel power system.
3. Achieved the following economic objective:
   - Extensive market analysis of flywheel commercialization opportunities.
4. Advanced motor control software that exceeds the capabilities of any known third party product.

Project Status:

This project is completed.
Final Report Title: Flywheel Energy Storage System
PIER Publication Number: 500-04-014
PIER Web Location: www.energy.ca.gov/reports/2004-04-07_500-04-014.PDF

This effort has successfully identified and demonstrated the key performance elements an advanced flywheel power system needs to perform to provide load following for a distributed generation system. As a distributed generation load following device, it will facilitate customer acceptance of fuel cells, microturbines and natural gas combined heat and power systems.
In addition to the distributed generation load following application, AFS Trinity has identified commercialization requirements for three additional applications of its flywheel energy storage systems: power quality, light rail power management and industrial power management. This wider variety of commercial applications identified in this effort will help AFS Trinity and other emerging flywheel energy storage companies accelerate the commercial acceptance of their products.

Furthermore, AFS Trinity continues to work with several business incubator services in their search for new equity investment that will assist AFS Trinity in launching its flywheel product line. Concurrently with this project, AFS Trinity developed a detailed business plan for the commercialization of this emerging technology.

AFS Trinity recommends the continuation of the product development and market development of this promising technology. The next key technology milestone is to demonstrate the successful operation of

the flywheel system at an end user site. AFS Trinity will continue to seek both government agency funding and private investment to achieve that goal.

CERTS Microgrid Amendment

Contract #: 150-99-003 **Project #:** 3
Contractor: Lawrence Berkeley National Laboratory
Subcontractors: Northern Power Systems
Project Amount: $1,115,000
Contractor Project Manager: Joseph Eto (510) 486-7284
Commission Contract Manager: Bernard Treanton (916) 654-4512
Status: Completed

Project Description:
This amendment is follow-on work initiated in the Real Time System Monitoring and Control area of the existing Consortium for Electricity Reliability Technology Solutions (CERTS) contract 150-99-003. The DER Integration Micro-grid element involved technology development and an approach where the significant potential of smaller DER (<100 kilowatt (kW)/unit) to meet customers' and utilities' needs can be best captured by organizing these resources into Microgrids. Microgrids are envisioned as clusters of generators (including heat recovery), storage, and loads that are operated as single controllable systems. Microgrids can operate both connected to and synchronized with the utility distribution grid and in isolation from the utility distribution grid (as an "island"). System conditions, and more importantly, economic factors will dictate the prevailing mode of operation.

The purpose of this project is to create the technologies and control strategies needed to capture the full potential of distributed energy resources to improve the reliability of the California interconnected power system via the Microgrids concept. The objectives include: consideration of control systems, including the sensors and instruments necessary to gather intelligence for real-time power management and dispatch or coordination among distributed generation resources. It also includes improved modeling techniques to better characterize the technologies and their impacts on the distribution (and ultimately the transmission) system. With correct placement
and control, it should be possible to increase system reliability, lower the cost of power
deliver, improve power quality, and reduce the environmental impacts of producing and transmitting electricity.

This project supports the PIER Program objectives of:
- Improving the energy cost/value of California's electricity and the reliability, quality and sufficiency of California's electricity by creating the technologies and control strategies needed to capture the full potential of distributed energy resources.
- Improving the environmental, public health, and safety of California's electricity by reducing the environmental impacts of producing and transmitting electricity.

Proposed Outcomes:
1. Improve the energy cost/value of California's electricity by providing a means to automatically respond to supply-side problems.
2. Complete a micro-grid control emulation study and execution of contract with a generator manufacturer.
3. Prepare an RFP to solicit a test facility to evaluate the performances of these controls and related protection.

Actual Outcomes:
1. Completed a micro-grid control emulation study.
2. Prepared an RFP to solicit a test facility to evaluate the performances of these controls and related protection.
3. Evaluated Tecogen's performance to supply a generator (DG) for the micro-grid program.

Project Status:

The project has been completed.
Final Report Title: Planning for California's Future Transmission Grid:
Review of Transmission System, Strategic Benefits, Planning Issues, and Policy Recommendations
PIER Web Location: www.energy.ca.gov/reports/2003-10-23_700-03-009.PDF

CERTS Real Time System Grid Management

Contract #: 150-99-003 **Project #:** 4
Contractor: Lawrence Berkeley National Laboratory
Subcontractors: Electric Power Research Institute, Electric Power Group
Project Amount: $1,105,000
Contractor Project Manager: Joseph Eto (510) 486-7284
Commission Contract Manager: Don Kondoleon (916) 654-3918
Status: Completed

Project Description:
This is follow-on work initiated in the Real Time System Monitoring and Control area of the existing CERTS Electric System Reliability Enhancements contract. The purpose of the contract is to lay the ground work for a transition in reliability management philosophy from one based on passive readiness (with large, market-inhibiting safety margins), to one based on active anticipation and pre-emptive actions in response to impending emergencies. This project will provide integrated research and technology development that will help produce quicker and more flexible options for meeting the reliability, stability and ancillary service needs of California's electricity consumers.

This project supported the PIER Program objectives of:

- Improving the reliability/quality of California's electricity infrastructure by finding new solutions to ensure and maintain reliable electric service in California's restructured electricity market.
- Improving the energy cost/value of California's electricity by increasing the efficiency and competitiveness of California's restructured electricity market.

Proposed Outcomes:

1. Conduct research in the area of real time system management that will allow California's interconnected power system to operate with a better understanding of actual, ever-changing in real time, reliability limits.
2. Conduct research in the area of real time system management that will contribute to the transformation of the electric grid to an automatic switchable network.

Actual Outcomes:

1. Modified, fabricated, installed, demonstrated, and provided training for advanced prototype tools for real time system operations in close coordination with and through in-kind support from the California Independent System Operator (ISO). The tools included: VAR Management extended to include the full California system, Synchronized Phasor Measurement Post-Disturbance Workstation extended to include data from WAPA and SCE.
2. The infrastructure to allow for California ISO to obtain phasor information in real time also prepared in anticipation of future real-time monitoring applications involving the use of these data.

Project Status:
The tasks under the contract amendment for this project, as outlined above, have all been completed. Additional tasks, funded through separate follow-on amendments to the original contract, are still in progress. Preparation of the final report for this project is pending completion of the overall contract. Technical appendices describing work completed under each task have been prepared. The results of the project are being used (or are expected to be used) by the California ISO, and Energy Commission PIER.

Composite Reinforced Aluminum Conductor (CRAC)

Contract #: 500-00-003
Contractor: W. Brandt Goldsworthy & Associates, Inc.
Contract Amount: $1,100,479
Match Amount: $325,000
Contractor Project Manager: Michael Golden (310) 375-4565
Commission Contract Manager: Jamie Patterson (916) 657-4819
Status: Cancelled

Project Description:
The purpose of this project was to continue research begun under PIER contract number 500-98-035 with the same contractor. Under the first PIER contract, the contractor successfully completed a $75,000 research effort to determine the feasibility of using a composite reinforced aluminum conductor (CRAC TelePower) in applications dominated by the standard aluminum conductor, steel reinforced (ACSR). This follow-on research was to develop prototype manufacturing technology for CRAC and demonstrate the conductor's performance on a 2,000 foot (nominal) 3-phase span using Southern California Edison's expertise. It was hoped that
the new conductor would be capable of higher amp loading for the same cost as ACSR, and would also be able to carry digital and analog signals for communications and conductor diagnostic purposes.

Phase II was evaluating manufacturing process improvement concepts which could have fundamentally affected the CRAC-TelePower conductor price and quality. An example was
to review the cost savings made possible with co-mingling the glass/resin material as part of the conductor manufacturing process. Another example was to review the feasibility of individually powder coating the fibers with thermoplastic matrix material at the bushing. This idea, if it
had been proven feasible, may have created other clean manufacturing facilities in California
that would have been able to supply the worldwide composites industry with a superior
material system.

The goal of this project was to design, develop and demonstrate a transmission line with both power and data transmission capability. The project demonstration of this concept also included developing and demonstrating new manufacturing methods needed to make it cost-competitive. This technology could have potentially strengthened California's and the Nation's electric power and communications infrastructure. The research would have also enabled substantial environmental benefits because the technology would have resulted in the ability to reconductor existing lines with a conductor that transfers more power per unit of weight.

This project supported the PIER Program objectives of:

- Improving the reliability/quality of California's electricity by avoiding power outages caused by line sagging and swinging, high winds and ice buildup.
- Improving the energy cost/value of California's electricity by reducing losses and the costs of replacing conductors.
- Improving the environmental and public health costs/risks of California's electricity by reducing the need for new transmission lines and corridors.
- Improving the safety of California's electricity by significantly reducing the potential for line clearance violations.

Proposed Outcomes:

1. Beta-test CRAC manufacturing technology by producing sufficient, specification-grade CRAC-TelePower conductor to span three phases at 2,000 feet in a real-time power transmission demonstration.
2. Demonstrate the CRAC-TelePower combined power and data communication conductor in a 2,000 foot, 3-phase conductor span. Specific performance targets were:
   - Line Sag: Target is 20% less line sag over entire operating temperature range.
   - Ampacity: Target is 40% more "Ampacity" compared to ACSR (DRAKE).
   - Magnetic Fields: Target is 50% reduction in magnetic fields on the ground.
   - Damping: Target is increased damping under conditions of galloping and aeolian vibrations.
   - Data Transfer: At least 0.5°C accuracy with a spatial resolution of one meter (analog).
   - Fewer than 1 error bits per 109 bits (digital).
3. Determine the feasibility of manufacturing "CRAC TelePower" for $1 per product pound.

Project Status:

The project reached the second objective. Unfortunately this contract was terminated in December, 2003 because the contractor was unable to perform the tasks necessary to complete the project. Shortly after the death of Mr. Goldsworthy in 2003, project personnel left the employ of the company and the company entered into bankruptcy proceedings.

DR Online Resources Guide Update

Contract #: 500-02-014 **Work Authorization #:** E2I-WA-110
Contractor: Electricity Innovation Institute
Subcontractors: Energy International, Inc.
Project Amount: $136,100
Contractor Project Manager: Brice Freeman (650) 855-1050
Commission Contract Manager: Mark Rawson (916) 654-4671
Status: Completed

Project Description:
The objective of the proposed project is to expand and update the *California Distributed Energy Resources Guide*, an on-line resource located on the California Energy Commission website. The *California Distributed Energy Resources Guide* was initially released in January 2002. Overall, this project will ensure the *Guide* is up to date with current technology and market developments, and will add important information about leading technologies. Also, since the original guide was developed, some emphasis has shifted to new technologies such as combined heat and power (CHP) and Energy Storage. Discussions of these technologies need to be added to or expanded in the *Guide*.

Goals of the Work Authorization:
The goal of this Work Authorization is to provide an update and expansion of the on-line *California Distributed Energy Resources Guide*.

This project supports the PIER Project objectives of:

- Improving the energy cost/value of California's electricity; and improving the reliability/quality of California's electricity by expanding and updating the *California Distributed Energy Resources Guide*.

Proposed Outcomes:

1. Provide DER Equipment and Research Initiatives Section updates and additions with a focus on combined heat and power (CHP).
2. Enhance and expand the Background section, including the development of animated graphics to better describe the various options and benefits of DER to consumers.
3. Revise the Markets and Demonstrations sections.

Project Status:
This project was delayed due to difficulty with the animations. However, this project was completed November 2004, and the Energy Commission website has been updated with these deliverables:

⇒ http://www.energy.ca.gov/distgen/

Electric System Reliability Enhancements

Contract #: 150-99-003 **Project #:** 1
Contractor: Lawrence Berkeley National Laboratory
Subcontractors: Electric Power Research Institute, Oak Ridge National Laboratory, Pacific Northwest National Laboratory, Sandia National Laboratories, Bonneville Power Administration, Southern California Edison, University of Wisconsin, Electric Power Group, Optimal Technologies
Project Amount: $7,200,000
Contractor Project Manager: Joseph Eto (510) 486-7284
Commission Contract Manager: Don Kondoleon (916) 654-3918
Status: Completed

Project Description:
The purpose of this project is to address the transition of California's electricity supply and delivery infrastructures from vertically integrated, utility-controlled organizations to restructured, market-driven institutions. Power supply, network management and control systems are being driven to find new solutions to the traditional methods used to ensure stable power flows, frequency and voltage control. This project will provide an integrated suite of reliability-related research and technology development that will help produce quicker and more flexible options for meeting the reliability needs of California's electricity consumers in the new industry structure. This project was conducted by Lawrence Berkeley National Laboratory, acting on behalf of the Consortium for Electric Reliability Technology Solutions (CERTS).

This project supported the PIER Program objectives of:

- Improving the reliability/quality of California's electricity infrastructure by finding new solutions to ensure and maintain reliable electric service in California's restructured electricity market.
- Improving the energy cost/value of California's electricity by increasing the efficiency and competitiveness of California's restructured electricity market.

Proposed Outcomes:

1. Identify and define priorities for publicly-funded reliability research needed to ensure and maintain reliability in California's restructured electricity industry.
2. Conduct research in the area of real time system management that will allow California's interconnected power system to operate with a better understanding of actual, ever-changing in real time, reliability limits.
3. Conduct research in the area of integration of distributed resources needed to capture the full potential of distributed resources to maintain or improve the reliability of the California interconnected power system.
4. Conduct research in the area of reliability and markets, and especially demand response, needed to ensure that a fair and transparent market for reliability services will efficiently and reliably serve California energy consumers.

Actual Outcomes:

1. Prepared technical scoping memos and reports, held workshops, and met with stakeholders and Energy Commission staff to support PIER planning for the ESI transmission reliability program.
2. Modified, fabricated, installed, demonstrated, and provided training for advanced prototype tools for real time system operations in close coordination with and through in-kind support from the California Independent System Operator (ISO). The tools included: VAR Management, Synchronized Phasor Measurement Post-Disturbance Workstation, Advanced Topology Estimator, Short-Term Load Forecaster, Operator Training Simulator, Dynamic Transformer Rating, and Short-Term Market Simulator.
3. Refined concepts, conducted laboratory bench testing, and prepared initial technical specifications for a full-scale demonstration of the CERTS Microgrid, which allows for clusters of distributed energy resources (DER) to operate as an integrated unit, both connected to and

isolated from the electricity grid, with a minimum of fast communication between individual generating units. Implemented enhancements to a DER customer adoption modeling tool. Developed a proof-of-concept for an advanced power electronic inverter.

4. Provided technical support for the re-design of California ISO's congestion management system; conducted scoping for a first-ever demonstration of the use loads to provide system spinning reserve; and supported PIER planning for ESI Demand Response program.

Project Status:

The initial tasks under the original contract for this project, as outlined above, have all been completed. Additional tasks, funded through follow-on amendments to the original contract, are still in progress.

Preparation of the final report for this project is pending completion of the overall contract. Technical appendices describing work completed under each task have been prepared. The results of the project are being used (or are expected to be used) by the California ISO, and Energy Commission PIER.

Electric System Seismic Safety & Reliability Study

Contract #: 700-99-002
Contractor: Pacific Gas and Electric Company
Subcontractors: University of California, Berkeley
Contract Amount: $4,600,000
Match Amount: $5,400,000
Contractor Project Manager: Lloyd S. Cluff (415) 973-2791
Commission Contract Manager: David Chambers (916) 653-7067
Status: Completed

Project Description:
The greatest single natural-hazard threat to electric system reliability in California is the likely occurrence of a major urban earthquake. The 1989 Loma Prieta and 1994 Northridge earthquakes, although deadly and destructive events, were only a portent of potential future earthquake effects and should serve as a warning to all aspects of society to increase the state of earthquake readiness. Post-earthquake functioning of utility systems, in particular electric power service, are viewed by emergency responders and society in general as a vital need for rapid response and recovery from a major urban earthquake.

This project will fund "user-driven" research to support the development and rapid application of methods and technologies for reducing earthquake hazards and vulnerability, and improve electric system reliability and safety of electric transmission and distribution systems. This means that the users of the research results, namely utility engineers and operations personnel, initiate the identification of the specific needs for research, approve the scope of the research effort, and monitor the progress of the research to assure that practical, usable results will be obtained.

These results will enable faster post-earthquake restoration of customer service due to less damage and disruption of electric transmission and distribution service caused by future earthquakes, and by more accurate and immediately available post-earthquake information about the state of damage produced by future earthquakes. The results will also be available to be used, as appropriate, by businesses, industry, regulatory agencies, and the general public in the State to reduce earthquake vulnerabilities and respond more effectively to earthquake effects.

PEER (Pacific Earthquake Engineering Research Center) is a consortium of 18 research universities located in California and other western states that has received National Science Foundation support for research in earthquake engineering and related fields. The PG&E-PEER Business and Industry Partnership was formed in 1996 to address, in a user-driven manner, important earthquake issues encountered by electric utilities operating in earthquake-prone regions.

The goal of this applied research program is to improve the earthquake safety and reliability of electric power transmission and distribution in California. The research program was organized by the Joint Management Committee (JMC) to assure that research results would directly address utility needs in preparing for future earthquake occurrences, and that the results could be quickly implemented by utility personnel or their consultants.

This project supports the PIER Program objectives of:

- Improving the safety and reliability/quality of California's electricity by conducting research to enhance the stability of the electric system after major earthquakes.
- Enhancing local and state economies by minimizing the costs associated with power disruptions after a major earthquake.

Proposed Outcomes:

1. Develop technologies and protocols to mitigate the vulnerability of electric systems to damage directly and indirectly caused by earthquakes.
2. Develop assessment techniques to evaluate damage to electric systems caused by earthquakes and assess fiscal impacts due to the loss of electric service to the community.

Actual Outcomes:
Completed 108 projects that addressed the two proposed outcomes. These projects have provided useful results that meet utility needs in the seven topic areas. It is important to also note the integration of the projects to meet the goal of the program, namely to improve utility earthquake performance. The following bullets summarize, in a narrative form, the cumulative connections between the topics that address this goal.

- Topic 1 results (earthquake ground motions) are used as input to Topic 2 (site response) and Topic 3 (permanent ground deformation) studies.
- Topic 1 results are used as input to assess the vulnerability of substation components and interconnected equipment, as well as equipment qualification testing (Topic 4). Severe ground shaking and ground failures are the direct causes of substation damage that can disrupt power transmission to customers.
- Topic 1, 2, and 3 results improve the assessment of building damage (Topic 5) before earthquakes occur to help identify appropriate mitigation and risk management strategies, and immediately following an earthquake (with Topic 7) to aid in emergency response and recovery activities.
- System earthquake risk models (Topic 6) integrate information about hazards (Topics 1, 2, and 3) and building/equipment fragility (Topics 4 and 5) to estimate damage and functionality of the electric transmission and distribution system.

Although the connections among the individual projects are multi-faceted, a broad picture can be seen in the research results that enable utility personnel (and their regulatory counterparts) to have significantly improved information for taking actions regarding earthquake risks. These actions often include retrofitting a vulnerable building that houses office workers, changes in the procurement procedures and requirements for new equipment, upgrading old equipment and improving anchorages in substation yards, and modifying emergency response procedures to take advantage of new information. The customer benefits from these actions following an earthquake in terms of greater electric power reliability, and faster and less expensive recovery of the overall functioning of society. Of course, there will always be some utility system damage due to random failures of components or facilities, vulnerabilities related to aging infrastructure, and unknown or unexpected response of equipment. However, redundant electric system design and the operation skill of utility personnel can make the extent and duration of outages no worse than those of a winter storm.

Project Status:
The project is complete.
Final Report Title: Electric System Seismic Safety and Reliability
Publication Number: CEC-500-2005-007
Publication Date: January 2005
PIER Web Location: www.energy.ca.gov/pier/final_project_reports/CEC-500-2005-007.html

Energy Storage for Transmission or Distribution Applications (#94)

Contract #: 500-02-028 **Project #**16
Contractor: Electric Power Research Institute (EPRI)
Project Amount: $28,400
Contractor Project Manager: Steve Eckroad (650) 855-1066
Commission Contract Manager: David Chambers (916) 653-7067
Status: Completed

Project Description:
EPRI's Energy Storage for Transmission and Distribution Applications Program offers a portfolio of innovative energy storage options to support Transmission and Distribution owners in their objective to lower capital, maintenance, and operating costs of their equipment. This is accomplished by providing credible and timely data on the cost, benefit, performance and technology readiness for energy storage options suitable to peak shaving applications at the high voltage transmission level and the low voltage distribution level. The issue is not if energy storage devices can reduce peak loading on equipment while increasing their use factor, because energy storage devices are doing that function today in specialized non-transmission and distribution applications. Rather, the real issue is how to specify and deploy the proper energy storage option for the re-regulated, restructured utility transmission and distribution industry.

This project is designed to develop and deploy innovative modifications of existing storage options that have the highest value for today's transmission and distribution systems. Project activities include assessments of the economic and technical feasibility of existing and emerging energy storage applications that are best suited to today's re-regulated transmission and distribution utility industry. Proper assessment and application of energy storage technologies that defer new transmission and/or distribution capacity and increase reliability and through-put of existing transmission and/or distribution assets can reduce capital costs and extend life of transmission and/or distribution equipment. This project will provide the information and data necessary to make energy storage decisions. Next, field trials on promising prototype and emerging energy storage options will be performed, followed by fundamental technology development of the most promising energy storage system. Final activities will provide quantified strategic and operational economic benefits (and appropriate new tools) of energy storage systems applied to transmission or distribution systems.

This project supports the PIER Program objective of:

- Improving the reliability, quality, and sufficiency of California's electricity by developing storage option modifications for transmission and distribution systems.

Proposed Outcomes:

1. Create a handbook delineating cost and performance of key energy storage options best suited to transmission or distribution applications such as super-capacitors, advanced batteries, flywheels, and superconducting magnetic energy systems.
2. Perform an assessment of the economic and technical feasibility of existing and emerging energy storage applications best suited for the industry.
3. Conduct field trials on promising prototype and emerging energy storage options for transmission or distribution applications.

Actual Outcomes:

1. Handbook on Energy Storage Technologies for Application at the Transmission and Distribution Level: Technology Status, Lessons Learned, Applications and Economics. EPRI Product ID #1001834.
2. Energy Storage Technology Valuation Primer: Techniques for Financial Modeling. EPRI Product ID #1008810.
3. No Field trials on promising prototype and emerging energy storage options for transmission or distribution applications were conducted.

Project Status:
The project was completed in December 2004.

The results of the project are expected to be used by the utility industry.

Modeling Interconnection Analysis & Planning

Contract #: 500-03-011 **Project #:** 5
Contractor: National Renewable Energy Laboratory (NREL)
Subcontractors: Northern Power Systems
Project Amount: $405,897
Contractor Project Manager: Holly Thomas (303) 275-3755
Commission Contract Manager: Bernard Treanton (916) 654-4512
Status: Cancelled

Project Description:
The purpose of this project is two fold. The first goal is to validate and leverage the work by Northern Power Systems to develop a universal interconnection device. National Renewable Energy Laboratory (NREL) will model their device with computers and evaluate its performance when interconnected to a simulated utility system. By conducting these modeling evaluations, NREL and Northern will be able to identify any unforeseen protection scheme or operational issues prior to developing the prototype. Following the prototype build, NREL will expand planned laboratory tests of the prototype to validate its performance and ensure that it meets national and state interconnection standards. This work is important to understand the electrical impacts of Distributed Energy Resources (DER) on the utility distribution system and the validation of interconnection standards and rules.

The second goal is for NREL to assist PIER in the development of a multi-year program for advanced power electronic interfaces for DER namely the "Advanced Power Electronics Interface (APEI) Initiative." Power electronic interface costs and reliability continue to be a critical path item to the long term cost effectiveness of many DER systems including PV, fuel cells, and micro-turbines. However, power electronics offer an elegant and flexible solution to integrating DER to the utility system due to their programmability, flexible functionality, and controllability enabling such things as power conditioning or providing utility system support of real or reactive power. Because of this flexible functionality, other DER technologies such as engines are looking to power electronics interfaces to enable better, more flexible integration with the utility system. NREL will assist PIER staff in identifying the status of power electronic technology and where public interest R&D opportunities may exist. Working with PIER staff, NREL will then develop a multi-year R&D plan that PIER staff will consider for follow-on projects funding through competitive solicitations administered by NREL. Staff is also actively collaborating with the Department of Energy (DOE) and hope that DOE will jointly fund this new initiative perhaps as soon as FY 05/06.

These activities support goals of the California Energy Action Plan, and the California Distributed Generation Strategic Plan, the PIER 5-Year Investment Plan, and the PIER DER Integration R&D Plan and Technology Roadmap. The goals of these various policy documents and research plans are to use DER technologies to enhance the cost effectiveness, reliability, power quality, security and environmental friendliness of the California and U.S. electric
power system.

This project supports the PIER Program objectives of:

- Improving the energy cost/value of California's electricity by developing a universal and cheaper interconnection device.
- Improving the reliability/quality of the California's electricity by promoting new technologies to increase the use of DER to support the reliability of the grid.
- Improving the safety of California's electricity by developing advanced power electronics to controls DER and Grid interconnection.

Proposed Outcomes:

1. Develop processes, standards and technology for the purpose of integrating DER in the electrical distribution system.

2. Perform modeling and validation testing of NPS interconnect device operation in a simulated utility distribution feeder.
3. Develop a Program Plan for a multi-year initiative in Advanced Power Electronics Interface.

Project Status:
The project is active on schedule and on budget. This project will begin January 2005. The deliverable of this project will open the door to a multi-year project, namely the "Advanced Power Electronics Interface (APEI) Initiative."

Modeling Interconnection and Anti-Islanding of DER-Endecon

Contract #: 500-03-011 **Project #:** 1
Contractor: National Renewable Energy Laboratory (NREL)
Subcontractors: Endecon Engineering
Project Amount: $19,256
Contractor Project Manager: Holly Thomas (303) 275-3755
Commission Contract Manager: Bernard Treanton (916) 654-4512
Status: Cancelled

Project Description:
The overall Purpose of this project is to develop and utilize models to understand how DER operates in distribution circuits and to support interconnection standard development in California. The effort will leverage Endecon's work with Distributed Utility Associate to support the DER simulation distribution system at DUIT site in St Ramon. Additionally Endecon will address issue with IEEE 929/UL1741 islanding test procedure for equipment connected to the grid. That issue pertains to what range of value (1.8 to 2.5) of Q should be required for test evaluation. Endecon will develop statistical models describing the mean and variance of Q. This will result in a better understanding of the conditions that promote islanding.

This project supports the following PIER Program objectives:

- Improve energy cost/value of California's electricity.
- Improve the reliability/quality of the California's electricity.
- Improve the safety of California's electricity.

Proposed Outcome:

1. Develop processes, standards and technology for the purpose of integrating DER in the electrical distribution system.

Project Status:
The project was cancelled effective August 30, 2004. Matching funds were unavailable and without them the project could not go forward. Original Contract was $425,153.00. The administrative funding spent on this project was $19,256.00. The funding transferred to new project ("Modeling Interconnection& Analysis and Planning") is $405,897.

Real Time Ratings for Path 15

Contract #: 700-00-006
Contractor: The Valley Group, Inc.
Subcontractors: Niskayuna Power Consultants : PDC, Inc.
Contract Amount: $369,204
Contractor Project Manager: Tapani Seppa (203) 431-0262
Commission Contract Manager: Don Kondoleon (916) 654-3918
Status: Completed

Project Description:
The purpose of this project is to demonstrate the feasibility of implementing real-time transmission line ratings for Path 15, which is one of the most complex gates in the California transmission system. Path 15 consists of 6 transmission lines located between central and southern California within PG&E's service territory. This project investigates the feasibility of providing real-time transmission line ratings by monitoring the conductor tension and environmental factors for a multiple transmission line path and communicating the real-time data to PG&E and the system operators at the Independent System Operator (ISO). This project is also unique because it provides a calculated real-time rating for the path directly to the system operators, as opposed to previous systems that store data for collection and later analysis. Finally, this project will also identify other possible paths in California that could benefit from real-time thermal ratings.

This project supports the PIER Program objectives of:

- Improving the reliability and quality of California's electricity by increasing power transfer capability on an annual basis through Path 15.
- Improving the energy cost/value of California's electricity by reducing utility expenditures through decreased transmission congestion on Path 15 during peak periods.

Proposed Outcomes:

1. Develop software and procedures to allow an increase of thermal capacity of Path 15.
2. Verify the applicability of such hardware, software and methods for use on other thermally limited paths and single circuits in California.

Actual Outcomes:
The project was successful in demonstrating the feasibility of implementing real-time ratings for Path 15. The monitors were installed and calibrated, the data was collected and analyzed and results benchmarked against predicted outcomes. Based on the success of this project, PG&E has identified additional critical locations for monitoring and has initiated the installation of additional real-time monitors.

Project Status:
All tasks have been successfully completed. The final report has been completed and published.
Final Report Title: Recommendation Regarding Distributed Generation Interconnection Rules
Publication Number: P700-00-006
PIER Web Location: http://www.energy.ca.gov/reports/700-00-006.PDF

Reflective Energies

Contract #: 500-00-013
Contractor: Reflective Energies
Subcontractors: Endecon Engineering : Overdomain
Contract Amount: $1,501,268
Contractor Project Manager: Edan Prabhu (949) 380-4899
Commission Contract Manager: David Michel III (916) 651-9864
Status: Completed

Project Description:
The purpose of this project is to provide a program of monitoring, data collection, analysis, and reporting for selected Distributed Generation (DG) systems chosen for their diversity in relation to generation, the distribution grid, and customer impact concerns. Through this project, information will be disseminated to the Interconnection Workgroup (an industry workgroup), customers, utilities, manufacturers, government and others in the interest of simplifying future interconnections. This simplification will help reduce costs.

This project will also develop the specifications for a separately developed California certification database for DG systems that are certified for certain applications. The certification database will also streamline the interconnection process and is expected to reduce costs. In addition, this project will develop an interconnection guidebook that will help developers and utility customers to understand the requirements and processes associated with interconnection of distributed energy resources in accordance with Rule 21. Finally, this project will provide active participation in the Institute of Electrical and Electronics Engineers (IEEE) P-1547 Interconnection Standard Workgroup. The Contractor will be acting as co-author for the development of key sections of the new standard.

The goals of this project are to:

- Characterize the electrical effects of DG on the distribution system.
- Evaluate whether Revised Rule 21 has improved the process of interconnection of DG to the electrical system.
- Assess the potential for simplifying Rule 21 further to expand the types of different applications eligible for a "simplified interconnection."

This project could potentially reduce the cost on interconnection below what was experienced prior to the Revised Rule 21 by 30 percent for units less than one megawatt (MW) and by 15 percent for units equal to or greater than one MW. The project could also potentially reduce the costs associated with delays in approval and installation of interconnection by more than 20 percent for projects less than one MW.

This project supports the PIER Program objectives of:

- Improving the reliability/quality of California's electrical system by determining the power quality and reliability impacts of DG units on the distribution system.
- Improving the energy cost/value of California's electricity by assessing the cost-effectiveness of interconnecting DG units under the new Rule 21 guidelines.

Proposed Outcomes:

1. Specifications for an electronic interconnection application system.
2. Specifications for a DG-certified equipment database.
3. Recommendations for further refinement to Revised Rule 21.
4. Case studies of up to 12 different DG installations within California.
5. Develop a DG Interconnection Guidebook.
6. Provide technical support for the IEEE P-1547 National Interconnection Standard.

Actual Outcomes:

1. The database specifications have been completed and are being used to develop the online interconnection application system and certified equipment databases that will eventual reside on the Energy Commission's Distributed Energy Resources website.
2. Additionally, thirty-three interconnection workgroup meetings have been supported to further refine Revised Rule 21. Outreach has been initiated to California municipal, cooperative utilities and irrigation districts. Several have adopted near versions of the Revised Rule.
3. Ten distributed energy equipment models have been approved as "Rule 21 Certified" while other equipment models continue to apply.
4. The *California Interconnection Guidebook*: *A Guide to Interconnecting Customer-owned Electric Generation Equipment to the Electric Utility Distribution System Using California's electric Rule 21* has been published (publication number P500-03-083).
5. Meetings of IEEE P-1547 have been attended where the National Interconnection Standard has passed a milestone adoption. With this national standard adoption, the Rule 21 Workgroup has begun revising Rule 21 to reflect the new national standard.
6. Eleven DG units on six sites were monitored for their effects to their distribution systems, their loads, and between themselves. The finding were published in the *DG Interconnection Monitoring: the FOCUS-II Project Final Report* (publication number CEC-500-2005-009).
7. Published a study to measure the benefits of interconnections of distributed generation titled, *Making Better Connections: Cost Effectiveness Report on Interconnnection of Distributed Generation in California Under the Revised Rule 21*(publication number P-500-04-044F).

Project Status:

This project was completed in December, 2004.
Final Report Title: DG Interconnection: The FOCUS-II Project
Publication Number: CEC-500-2005-006
Publication Date: January 2005
PIER Web Address: www.energy.ca.gov/pier/final_project_reports/CEC-500-2005-006.html

Seismic Studies

Contract #: 500-01-025 **Work Authorization #:** E2I-WA-001
Contractor: Electricity Innovation Institute
Project Amount: $20,000
Contractor Project Manager: Ben Damsky (650) 855-2385
Commission Contract Manager: David Chambers (916) 653-7067
Status: Expired term

Project Description:
The purpose of this project is to seismically qualify substation equipment in accordance with the new Institute of Electrical and Electronics Engineers (IEEE) Standard 693, IEEE Recommended Practice for Seismic Design of Substations.

This project is needed to reduce costs by combining resources to qualify the equipment, and to have equipment that is pre-qualified so that facility construction is not delayed due to qualification. It will also qualify equipment that has the most vulnerable configuration so that other equipment variations can be qualified by similarity methods. A consortium of utilities will provide guidance to the project. Testing will be performed at appropriate test facilities as directed by the consortium.

This project supports the PIER Program objectives of:

- Improving the reliability/quality of California's electricity by qualifying substation equipment to meet the IEEE Standard 693.
- Improving the safety of California's electricity by providing utilities access to equipment that has been qualified in accordance with the standard.

Proposed Outcomes:

1. Develop improved seismic procedures for conducting shake-table tests on selected equipment.
2. Verify compliance of selected substation equipment with IEEE Standard 693.
3. Understand deficiencies of the standard for the qualification of transformer bushings and propose improvements.

Actual Outcomes:

1. Ten utilities formed a consortium under the Electric Power Research Institute with the purpose of qualifying substation equipment to IEEE 693.
2. Selected test facility, prioritized order of tests, established equipment support structure specifications, defined vibration test requirements, and determined specifications for electrical equipment and tests.
3. Tested and qualified eight Capacitor Voltage Transformers from two manufacturers, including a 230-kV (kilovolts) porcelain unit, a 500-kV porcelain unit, three types of 230-kV composite units, and three types of 500-kV composite units.
4. A draft report was submitted for Capacitor Voltage Transformer - CVT TEIMF 500CS.
5. Established the groundwork for testing and qualifying disconnect switches. This includes developing a support structure for the 230-kV switches, identifying switch manufacturers willing to participate, and developing an RFP to go to manufacturers.
6. Two models of transformer bushings have been developed that indicate that a more detailed model is needed.

Project Status:
The term of this project has expired. The final report is under review.

ESI Projects Completed in 2003

Development of a Real-Time Monitoring/Dynamic Rating System for Overhead Lines

Contract #: 500-98-034
Contractor: Engineering Data Management, Inc.
Subcontractors: Power Line Systems, Inc. : Southwest Research Institute : EPRI
Contract Amount: $499,402
Match Amount: $12,000
Contractor Project Manager: Andrew Stewart (970) 204-4001
Commission Contract Manager: David Chambers (916) 653-7067
Status: Active

Project Description:
The overall objective for the project was to develop a system with sensors for monitoring ground clearances/sags in selected spans on a real-time basis coupled with software to model the clearances/sags in all spans that can provide a real-time rating for the line. The technical performance objectives of this project were to develop a practical, user-friendly and cost effective transmission-line monitoring system with the flexibility and features needed to work with existing and state-of-the-art transmission systems. The goal for the line rating software design was to enable the system to be used by transmission system operators, including utilities and the Independent System Operator (ISO) for three purposes: 1) real-time monitoring/dynamic rating of lines, 2) studies to evaluate the performance of existing lines and to re-rate their capacity, and 3) monitoring the status of clearances/sags in "safety critical" areas.

This project supports the PIER Program objectives of:

- Improving the reliability/quality of California's electricity by providing a system to reduce power outages caused by sagging lines.
- Improving the energy cost/value of California's electricity by improving the efficiency and power carrying capability of monitored lines and reducing costs of power delivery.
- Improving the environmental and public health costs/risks of California's electricity by reducing need for new transmission corridors and avoiding fires.
- Improving the safety of California's electricity by monitoring transmission line-to-ground clearance thereby avoiding electrical shock hazard.

Actual Outcomes:

1. Successfully completed design, development and analysis of the Saggometer Sensor System.
2. The Saggometer Sensor System performed real-time monitoring and dynamic rating of lines.
3. Developed a real-time rating software module (PLS-CADD).

Project Status:
The project is active.

Energy Storage for Transmission or Distribution Applications

Contract #: 500-02-028 **Project #:** 2
Contractor: Electric Power Research Institute (EPRI)
Project Amount: $65,000
Contractor Project Manager: Steve Eckroad (650) 855-1066
Commission Contract Manager: David Chambers (916) 653-7067
Status: Completed

Project Description:
EPRI's Energy Storage for Transmission or Distribution Applications Program offers a portfolio of innovative energy storage options to support Transmission or Distribution owners in their objective to lower capital, maintenance, and operating costs of their equipment. This is accomplished by providing credible and timely data on the cost, benefit, performance and technology readiness for energy storage options suitable to peak shaving applications at the high voltage transmission level or the low voltage distribution level. The issue is not if energy storage devices can reduce peak loading on equipment while increasing their use factor, because energy storage devices are doing that function today in specialized non-transmission and distribution applications. Rather, the real issue is how to specify and deploy the proper energy storage option for the re-regulated, restructured utility transmission and distribution industry.

This project is designed to develop and deploy innovative modifications of existing storage options that have the highest value for today's transmission and distribution systems. Project activities include assessments of the economic and technical feasibility of existing and emerging energy storage applications that are best suited to today's re-regulated transmission and distribution utility industry. Proper assessment and application of energy storage technologies that defer new transmission or distribution capacity and increase reliability and through-put of existing transmission or distribution assets can reduce capital costs and extend life of transmission or distribution equipment. This project will provide the information and data necessary to make energy storage decisions. Next, field trials on promising prototype and emerging energy storage options will be performed, followed by fundamental technology development of the most promising energy storage system. Final activities will provide quantified strategic and operational economic benefits (and appropriate new tools) of energy storage systems applied to transmission or distribution systems.

This project supports the PIER Program objectives of:

- Improving the reliability, quality, and sufficiency of California's electricity by developing storage option modifications for transmission and distribution systems.
- Supporting the use of energy storage devices to absorb system overloads and fault currents.
- Using energy storage devices to shave peak loads.

Proposed Outcomes:

1. Assessment of the economic and technical feasibility of existing and emerging energy storage applications best suited for the industry.
2. Handbook delineating cost and performance of key energy storage options best suited to transmission or distribution applications such as super-capacitors, advanced batteries, flywheels, and superconducting magnetic energy systems.
3. Field trials on promising prototype and emerging energy storage options for transmission or distribution applications.

Actual Outcome:

1. Handbook on Energy Storage Technologies for Application at the Transmission and Distribution Level: Technology Status, Lessons Learned, Applications and Economics, EPRI Product ID #1001834.

Project Status:

The project has been completed.

Enterprise Information Security

Contract #: 500-02-028 **Project #:** 1
Contractor: Electric Power Research Institute (EPRI)
Project Amount: $55,000
Contractor Project Manager: Thomas Kropp (650) 855-2751
Commission Contract Manager: Yvonne Nelson (916) 654-4255
Status: Completed

Project Description:
The strategic mission of this project is to enhance the security of our electrical infrastructure against a broad spectrum of evolving threats including cyber and communications attacks. This project collaborates regarding how the electricity infrastructure can be made more secure without compromising the productivity advantages inherent in today's complex, highly interconnected electric networks. This project enables collaborative industry and government information sharing and both short and long term technology development and deployment to address resolution of this dilemma. The electric power industry must quickly rethink its basic approach to system security, identifying the most important vulnerabilities and implementing programs to address the terrorist threat through improved prevention, mitigation, and recovery.
This project supports the PIER Program objective of Improving the reliability and quality of California's electricity by researching issues to assist the electric power industry to identify vulnerabilities and implement programs that will enhance the security of the system.

Proposed Outcomes:
1. Countermeasures development (technologies and methodologies) and testing: The contractor is developing intrusion detection software, high-speed encryption tools, and security-enhanced Inter-Control Center Communication Protocols (ICCP).
2. Risk mitigation/management, quantification and increased awareness: Through collaborative information sharing, the contractor is developing guidelines, best practices, lessons learned, standards, procedures, and contingency mitigation plans.
3. Reduction of vulnerabilities associated with reliance on the Internet: The contractor is investigating the feasibility of eliminating reliance on the internet for critical utility operations and the potential to move toward a new communications infrastructure for secure utility operations.

Actual Outcomes:
1. Inter-Control Center Communication Protocols TASE 2 Security Enhancements, technical report, EPRI Product ID # 1002596.
2. Supervisory Control and Data Acquisition Systems Security Guide, technical report, RPRI Product ID # 1002604.
3. Scoping Study on Security Processes and Impacts, informal technical update, EPRI Product ID # 1008988.
4. Workshop on Energy Information Security topics, EPRI Product ID# E215120.

Project Status:
The project has been completed. The Commission's participation in this project ended as of December 31, 2003.

ESI Projects Completed in 2002

Assessing California Reserve Margins

Contract #: 100-98-001 **Project #:** 52
Contractor: Electric Power Research Institute (EPRI)
Subcontractors: EPRI Solutions
Project Amount: $25,000
Contractor Project Manager: Gary Geschwind (650) 855-2087
Commission Contract Manager: Mark Rawson (916) 654-4671
Status: Completed

Project Description:
The purpose of this project is to develop a report summarizing the value of adequate reserve margins for California and the Bay Area, particularly the San Francisco-San Jose corridor.

Part of the PIER Program's responsibility relates to providing a reliable supply of electric power to California ratepayers. It is, therefore, important for the Commission and the California Consumer Power and Conservation Financing Authority (CP&CFA) to understand what risk is associated with any planned or attained reserve margin of generation resources of all types in attempting to ensure adequate reserve margins to supply all the state's electricity needs.

This project will develop information to help answer the question: What is the risk of California electric customers experiencing power outages at varying levels of California generating reserves?

This project supports the PIER Program objective of:

- Improving the Reliability/Quality of California's Electricity by improving understanding of how adequate reserve margins can reduce the frequency, duration, and cost of outages.

Proposed Outcomes:

1. Develop a better understanding of how decentralized electric generation and non-generation options might reduce the frequency and length of outages and customer outage costs.
2. Compare the value of more peaking and customer units to increased reserves.
3. Determine how the options in task 1, above, might provide insurance against spot market price volatility due to the presence of market power at the margin.
4. Identify principal barriers to the implementation of renewable distributed generation in California and the ways the CP&CFA can remove or alleviate these barriers.

Actual Outcomes:
The project team delivered a final report to PIER and the California Power Authority in early 2002. The report describes the value of reserves as insurance in an uncertain world, covers distributed energy resources and distributed generation and their potential role in reducing outages discusses the impact of load management (conservation, real-time pricing, and curtailment) and identifies barriers to the implementation of renewables as well as opportunities for removing those barriers.

Project Status:
The project is complete.

Composite Reinforced Aluminum Conductor (CRAC)

Contract #: 500-00-003
Contractor: W. Brandt Goldsworthy & Associates, Inc.
Contract Amount: $1,100,479
Match Amount: $325,000
Contractor Project Manager: Michael Golden (310) 375-4565
Commission Contract Manager: Jamie Patterson (916) 657-4819
Status: Cancelled

Project Description:
The purpose of this project is to continue research begun under PIER contract number 500-98-035 with the same contractor. Under the first PIER contract, the contractor successfully completed a $75,000 research effort to determine the feasibility of using a composite reinforced aluminum conductor (CRAC TelePower) in applications dominated by the standard aluminum conductor, steel reinforced (ACSR). This follow-on research will develop prototype manufacturing technology for CRAC and demonstrate the conductor's performance on a 2,000 foot (nominal) 3-phase span using Southern California Edison's expertise. The new conductor has advantages of higher amp loading for the same cost as ACSR, and the potential for carrying digital and analog signals for communications and conductor diagnostic purposes.

Phase II is evaluating manufacturing process improvement concepts which may fundamentally affect the CRAC-TelePower conductor price and quality. An example is to review the cost savings made possible with co-mingling the glass/resin material as part of the conductor manufacturing process. Another example is to review the feasibility of individually powder coating the fibers with thermoplastic matrix material at the bushing. This idea, if proven feasible, has so much merit that it may lead to other clean manufacturing facilities in California that could supply the worldwide composites industry with a superior material system.

The goal of this project is to design, develop and demonstrate a combined transmission line power and data transfer concept. Successful demonstration of this concept also includes developing and demonstrating new manufacturing methods needed to make it cost-competitive. This technology can potentially strengthen California's and the Nation's electric power and communications infrastructure. The research will also enable substantial environmental benefits because the technology will result in the ability to reconductor existing lines with a conductor that transfers more power per unit of weight. Many miles of California's overhead electricity transmission lines have reached the end of their service lives or are being stressed beyond their design limits due to load growth and heavy power transfers across longer distances. This technical development is very timely as the current age of transmission lines ranges from 30–70 years.

This project supports the PIER Program objectives of:
- Improving the reliability/quality of California's electricity by avoiding power outages caused by line sagging and swinging, high winds and ice buildup.
- Improving the energy cost/value of California's electricity by reducing losses and the costs of replacing conductors.
- Improving the environmental and public health costs/risks of California's electricity by reducing the need for new transmission lines and corridors.
- Improving the safety of California's electricity by significantly reducing the potential for line clearance violations.

Proposed Outcomes:
1. Beta-test CRAC manufacturing technology by producing sufficient, specification-grade CRAC-TelePower conductor to span three phases at 2,000 feet in a real-time power transmission demonstration.
2. Demonstrate the CRAC-TelePower combined power and data transfer concept in a 2,000 foot, 3-phase conductor span. Specific performance targets are:

- Line Sag: Target is 20 % less line sag over entire operating temperature range.
- Ampacity: Target is 40 % more "Ampacity" compared to ACSR (DRAKE).
- Magnetic Fields: Target is 50 % reduction in magnetic fields on the ground.
- Damping: Target is increased damping under conditions of galloping and aeolian vibrations.
- Data Transfer: At least 0.5°C accuracy with a spatial resolution of one meter (analog).
- Fewer than 1 error bits per 109 bits (digital).

3. Determine the feasibility of manufacturing "CRACTelePower" for $1 per product pound.

Project Status:
The project reached the second objective. Unfortunately this contract was terminated because the contractor was unable to perform the tasks necessary to complete the project.

Distributed Energy Resources Public Website

Contract #: 100-98-001 **Project #:** 34
Contractor: Electric Power Research Institute (EPRI)
Project Amount: $160,157
Match Amount: $160,157
Contractor Project Manager: Doug Herman (650) 855-1057
Commission Contract Manager: Mark Rawson (916) 654-4671
Status: Completed

Project Description:
The purpose of this project was to develop a web site to provide current, reliable information about distributed energy resources (DER) to assist a broad public audience in evaluating and implementing DER.

Distributed energy resources are poised to play a key role in California's energy future. Yet many people—including energy professionals, policy makers and energy consumers—are not knowledgeable about DER technologies and associated issues. This lack of knowledge has presented a barrier to DER implementation and deployment.

To meet the need for accurate and objective information about DER, the PIER Program and EPRI developed the California Distributed Energy Resource Guide. This public benefit website addresses all aspects of DER in a well-organized, easy-to-use structure. The website includes much of the information developed by EPRI's distributed resources program over the past several years. The EPRI program provides unbiased information to help all DER stakeholders to understand DER's role in the evolving energy enterprise. The information is the latest and best available, derived from primary research, original studies, and an extensive network of contacts in the DER industry, energy companies, research organizations, and government.

The site can be accessed from the CEC's home page by clicking the link to Distributed Generation in the right hand links column under "Power Plants & Licensing" or directly at: www.energy.ca.gov/distgen

This project supports the PIER Program objectives of:

- Improving the reliability/quality of California's electricity by providing information to support development of generation options that provide peaking power, enhance system reliability, and assure power quality.
- Improving the energy cost/value of California's electricity by assisting in the development of innovative distributed resource technologies that can potentially provide lower delivered cost electricity than central station power.
- Improving the environmental and public health costs/risks of California's electricity by providing information to support the development and implementation of fuel cells and other environmentally preferred generation technologies.

Proposed Outcomes:
By providing information to stimulate the development of distributed energy resources, this project will help:

- Reduce the cost of electricity and increase its value.
- Increase the reliability of the electric system.
- Reduce the environmental impacts of electricity generation, distribution and use.
- Enhance California's economy.
- Demonstrate a connection to the market.
- Advance science and technology not provided by competitive and regulated markets.

The DER Public Web will present information that addresses the needs of the public/consumers of California who may be interested in a DER application at their home or business. The site's intended audience also includes equipment vendors, consultants, government agencies, and the research/academic community. Information categories include:

- Background/introduction.
- DER technologies.
- Economics of owning and operating DER technologies.
- Markets and applications for DER in California.
- Electrical interconnection.
- Examples and case studies.
- Policy implications.

Project Status:
The project was completed January 29, 2002. The DER Public Web (www.energy.ca.gov/distgen) offers information of value to anyone interested in DER, whether they are seeking a basic introduction to DER equipment and benefits or more in-depth information on economics, permitting, regulatory activities and policy issues.

Enterprise Information Security (EIS) - Program 86

Contract #: 500-00-023 **Project #:** 52
Contractor: Electric Power Research Institute (EPRI)
Project Amount: $45,000
Match Amount: $1,421,096
Contractor Project Manager: Jim Fortune (650) 855-2500
Commission Contract Manager: Laurie ten Hope (916) 654-4637
Status: Completed

Project Description:
The purpose of this project is to address concerns over the security of the energy industry's electronic infrastructure against cyber threats. These threats range from corporate espionage by competitive rivals to sabotage by hackers or terrorists. Immediate concerns center on the vulnerabilities of electronic operations systems such as supervisory control and data acquisition (SCADA) and plant distributed control systems (DCS) and their interconnectivity with corporate business systems. As the energy industry becomes increasingly automated and electronically connected, a concerted cyber attack could be catastrophic from business, customer and national security perspectives.

This EPRI program identifies and addresses security issues through a series of meetings and workshops that provide forums for sharing information on best practices, lessons learned, and vulnerability assessment results. In addition, the program focuses on the development, application, and testing of technical solutions.

This project supports the PIER Program objective of:

- Improving the reliability of California's electricity by leveraging the collective knowledge of the participants to develop strategies for protecting the State's critical electric power infrastructure against cyber threats.

Proposed Outcomes:

1. Organize and facilitate workshops for collaborative exchange of information and ideas to support the development of robust security programs.
2. Provide security guidelines covering critical security activities and policies and procedures, all reflecting the collective knowledge of the industry.
3. Provide security enhancements that reduce the vulnerability of control centers, SCADA systems, power plant controls, field devices, customer electronic meters, and the protocols used to communicate with these devices, while meeting operational needs.
4. Enhance the risk assessment framework developed in 2001 to help decision makers understand and evaluate the costs and benefits of different security measures.

Actual Outcomes:

1. Workshops
   - Three topical workshops were delivered in 2002.
2. Guidelines, Policies and Procedures
   - EPRI published a report, *Security Vulnerability Self-Assessment Guidelines for the Electric Power Industry* (1001639), that provides detailed guidelines and technical information that will assist any organization engaged in generating, transmitting, distributing, or marketing electric power in performing its own security self-assessment.

3. Security Enhancements
    - EPRI published a report, *ICCP (TASE.2) Security Enhancements: Executive Summary* (1001641) that summarizes the current security enhancements that EPRI is recommending to secure the ICCP. The detailed recommendations are presented in EPRI report 1001642.
    - A technical report, *ICCP (TASE.2) Security Enhancements: Volume 1* (1001642), was published that details the security requirements for the Inter-Control Center Communications Protocol (ICCP-IEC60870-6 TASE.2), also known as TASE.2. Based on these requirements, the report assesses the current ICCP for potential vulnerabilities and recommends solutions.
    - A technical update report, *Security Enhancements for Utility Information Architectures* (1002651) was published. It presents the results of a study conducted to assess the impact on performance of the security measures being proposed for the common protocols used for digital control of power system equipment, and to determine what additional security measures outside the domain of protocols may be needed for complete end-to-end security.
4. Risk Assessment Framework
    - A web-accessible risk assessment framework was completed in 2002.

Project Status:
The project has been completed.

Field Trials of Promising Prototype And/Or Emerging Energy Storage Options for T&D Applications

Contract #: 500-00-023 **Project #:** 53
Contractor: Electric Power Research Institute (EPRI)
Project Amount: $31,111
Contractor Project Manager: Steve Eckroad (650) 855-1066
Commission Contract Manager: Jamie Patterson (916) 657-4819
Status: Completed

Project Description:
The purpose of this project is to demonstrate promising new energy storage options designed specifically for transmission and distribution (T&D) reliability, peak shaving, and VAR control applications. The project will select final design parameters, perform cost/benefit studies, assist in building unit(s), install independent performance monitoring equipment, analyze operating data, and conduct long-term reliability and operational analyses.

This project supports the PIER Program objective of:

- Improving the reliability/quality and the energy cost/value of California's electricity through innovative energy storage technologies that help increase grid utilization while maintaining system stability.

Proposed Outcome:

1. Reduce capital costs and maximize T&D equipment use factors by deploying energy storage equipment based on credible cost and performance data from field trial demonstrations of candidate energy storage options.

Project Status:
In fall 2002 EPRI and AEP signed a tailored collaboration agreement to demonstrate a 100 kW (500 kW power quality), 750 kWh peak shaving sodium sulfur (NaS) battery. This battery has been successfully installed at an AEP office building near Columbus, Ohio. A two-year test program is planned and will be conducted in follow on activities. The report *Field Trial of AEP Sodium -Sulfur (NAS) Battery Demonstration Project* #1001835 will be delivered in 2003. The 2002 funded portion of the project is completed.

Identifying Opportunities in Distributed Generation

Contract #: 500-00-022 **Project #:** 7
Contractor: Gas Technology Institute
Subcontractors: Primen
Project Amount: $75,000
Match Amount: $1,311,700
Contractor Project Manager: John Kelly (847) 768-0665
Commission Contract Manager: Arthur J. Soinski Ph.D. (916) 654-4674
Status: Completed

Project description:
This Fund provides sponsors with the opportunity to gain familiarity with small-scale generation technologies that are still emerging such as microturbines, fuel cells, energy storage technologies, energy recovery, or web-based dispatch and control technology. Further research, though secondary in focus, will examine already existing internal combustion (IC) engines, and traditional small gas turbine technology. By joining with the other investors in this Fund, investors share the costs and obtain the information at a fraction of the costs that would be incurred if done independently. In addition, investors are offered a cost-effective, low-risk environment in which to explore new business opportunities from information and products developed. All investors further save by leveraging previous GTI investments and research.

The major activities under this project are:
1. Business Opportunities in Aggregating Distributed Generation.
2. Pilot Project Demonstration for Web-based Aggregation and Control System.
3. DG Interactive Guidebook on CD-ROM.
4. Microturbine Performance Assessment Program.
5. Field Demonstration of Combined Microturbine & Desiccant Dehumidification (cogeneration).
6. Under-5-MW internal combustion (IC) Engine case history study – U.S. Sites.

This project supports the PIER objectives of:
- Higher quality, more reliable power.
- Addressing barriers to deployment of distributed generation and renewables.

Proposed outcomes:
The following outcomes and deliverables are anticipated:
1. Field evaluations and technology and test reports of proton exchange membrane (PEM) fuel cells and pre-commercial Ingersoll-Rand microturbines (several fuel cell sites and at least one microturbine site in an anchor investor territory.
2. Market research (Delphi) studies for small fuel cells and microturbines.
3. Business and technology assessments for the top-20 solid oxide fuel cell (SOFC) and PEM fuel cell manufacturers.
4. One-half day workshop at investor site to discuss results of the fuel cell study.
5. PowerPoint presentation summarizing fuel cell study results on CD-ROM.
6. Business and technology assessments for top microturbine manufacturers.
7. PowerPoint presentation summarizing major microturbine study findings.

Actual Outcomes:

1. FCT Solid Oxide Fuel Cell (SOFC) Fuel Cell Field Demonstration.
   - GTI worked with, and supported, the host utility, Memphis Light, Gas & Water (MLGW), to promote the project to the Memphis Botanic Garden (MBG). The MBG has agreed to host the FCT SOFC to power a greenhouse(s) on their grounds.
   - MLGW personnel have worked with MBG personnel to gather preliminary site related information. This information has been discussed with the project team, which consists of representatives from the following organizations.
     - Fuel Cell Technologies, Inc. (Fuel Cell Manufacturer).
     - Gas Technology Institute (Project/Technical Management).
     - MBG (Host Site).
     - MLGW (DGMF Host Utility Representing municipals).
   - A tentative site within the grounds of the MBG has been selected. Specifically, the fuel cell will power the Conservatory Classroom greenhouse and possibly the Volunteer Greenhouse. Some pictures are shown below for reference.
     Conservatory Classroom.
   - Several potential sites near the Conservatory Classroom Greenhouse and the Volunteer Greenhouse have been discussed. A final location will be selected after a site visit is conducted and additional information is analyzed.
   - GTI, on behalf of the DGMF members, reached agreement with FCT on December 30, 2002 for the actual purchase of the fuel cell system and other related items such as training, shipping, warranty, and start-up services.
   - GTI has prepared and issued for review and comment a "Draft" Host Site Agreement.
2. Proton Exchange Membrane (PEM) Fuel Cell Field Demonstration.
   - GTI prepared and issued a bid package to four SOFC manufacturers. Some interest was expressed verbally, however, no written proposals were received.
   - GTI prepared and submitted to Questar a contingency plan for the fuel cell demonstration project to be done in their service area. This plan will be implemented starting in the first quarter of 2003. Essentially, this plan consists of procuring a Plug Power 5 kW PEM fuel cell and working with Questar to find an application for it.

3. **DG Web Advisor.**
   - GTI continues to populate the DG web site with pertinent documents and information, such as quarterly reports, meeting and teleconference minutes
     and others.
   - The links section has been fully populated with a variety of web sites related to the distributed energy area. A news/resources section was added with a variety of good information sources.
   - The remote monitoring web site was updated with more technical information about the equipment.
   - GTI has fine tuned access to the HealthSouth remote monitoring site for the IR microturbine test currently taking place. This data can be accessed through the 2001 DGMF web site.
   - GTI is working with the Plug Power demonstration project team to get remote monitoring capabilities installed at the Challenger Learning Center.
   - Customized reports and graphs of past data, as well as access to real live data from the IR demonstration are now available.

4. **Microturbine (MT) Performance Testing Program.**
   - The Capstone Performance Test Report was issued in January, 2002.
   - GTI installed and tested the Ingersoll Rand 70 kW microturbine. Several specified tests were conducted and the data recorded for further analysis. Results presented to investors.
   - **GTI completed the start up of the new Distributed Energy Test Center in Des Plaines, Illinois. The Turbec unit was installed and tested in the new lab.**
   - A variety of tests were performed on the Turbec unit. GTI is working on the final report summarizing the results of these tests and the overall performance of the Turbec microturbine. This final report is scheduled to be distributed to fund members in January, 2003. Overall, the Turbec unit worked very well.
   - GTI has received the Capstone 60 kW microturbine and intends to install and test this unit, in GTI's new lab, during the first quarter of 2003.
   - An agreement was made that the DGMF Microturbine Project will provide cofunding for the testing of the Bowman 80 kW microturbine.
5. DG Strategic Service.

   DG Interactive Guidebook is now on CD-ROM.
   - The following information was issued by Primen:
     - Distributed Energy Updates #31 through #34.
     - Primen Perspective #12: "Absorption Chillers and DE: Combo With Potential."
     - Primen Perspective #13: "Distributed Asset Management: Can DE Deliver?"
     - Primen Perspective #14: "Stationary Fuel Cells: Is the Glass Half Empty or Half Full?"
     - Primen Strategic Report dated September 26, 2002: "Will Demand Response Programs Drive the Market for Distributed Resources?"
     - Primen Strategic Report dated June 26, 2002: "The New Economic Landscape for DE."
     - Primen Perspective #15: "Is Small Profitable Today? An Energy Provider's Perspective."
     - Primen Perspective #16: "Residential Distributed Energy, Will It Expand Beyond the Standby Market?"
     - Primen Perspective #17: "Hanging Tough in a Soft Market."
     - Primen Perspective #18: "New Technology Automobiles – Road to Distributed Energy?"
     - Primen Strategic Report dated December 21, 2002: "Distributed Energy's Move to the Mid-Market Applications and Technologies in the 500 kW to 10 MW Range."

Project Status:
The project has been completed.

Intelligent Software Agents for Control & Scheduling of Distributed Generation

Contract #: 500-98-040
Contractor: Alternative Energy Systems Consulting, Inc.
Subcontractors: Reticular Systems, Inc.
Contract Amount: $554,010
Match Amount: $59,543
Contractor Project Manager: Gerald Gibson (858) 560-7182
Commission Contract Manager: Jamie Patterson (916) 657-4819
Status: Completed

Project Description:
The purpose of this initial phase of this project was to develop a demonstration package of intelligent software agents for control and scheduling of distributed generation. The California Alliance for Distributed Energy Resources (CADER) projects that distributed generation could supply 20 – 40 percent of the estimated capacity that will be needed in California to both replace retired generating plants and to meet increased loads. At its most basic level, an intelligent agent is a software-based device that acts on behalf of the user.

Software agents have a number of capabilities including the ability to monitor their own execution environment, communicate with other agents or the user and maintain some representation of their own internal mental state. Software agents are characterized by their ability to operate autonomously. This means that after an agent starts executing, no further interventions are required from the user. An autonomous agent is able to complete its task on its own. Software agents can be used in a wide variety of applications. An intelligent software agent can contain significant amounts of expertise and can be applied in systems requiring planning or learning capabilities.

Agents are particularly useful in applications involving machine to machine or man to machine communications. One popular use of agents is information seeking and cataloging on the Internet. Agents can be used in applications where they learn about an individual user and modify their own behavior to suit the information-seeking needs of the user. Agents are also useful in applications where multiple agents can communicate and cooperate with other agents for solving a given problem. These agents can be physically located on the same computer or distributed in a variety of locations. Multiple agents operating in conjunction, as an agency, can achieve goals/objectives that would not be otherwise achievable by a single agent.

Use of intelligent software agents with their ability to communicate and collaborate thus distributing the decision process, is well-suited to the task of scheduling and coordinating the activities of large numbers of DER assets. Use of agents in this fashion reduces the level of expertise needed to own and operate distributed energy resources, which in turn, allows greater participation by owners of distributed energy resources in California's competitive energy industry.

This project supports the PIER Program objective of:

- Improving the reliability/quality of California's electricity by enabling a greater participation by owners of distributed energy resources through the use of intelligent software agents for control and scheduling of distributed generation. Further, the research results will reduce distribution system congestion and avoid distribution line losses.

Proposed Outcome:

1. Develop and test a demonstration package of intelligent agents that communicate and collaborate to schedule operation of distributed energy resources in the California energy market.

Actual Outcome:

1. AESC produced a software package of intelligent software agents virtually controlling and scheduling distributed energy resources and fully participating in all California market activities.

Project Status:

This project has been completed and has met all of its objectives. The PIER Program is currently supporting the next project phase with the awarding of contract 500-00-016.

Overhead Transmission: Overhead Transmission Line Reference Manual - Program 35

Contract #: 500-00-023 **Project #:** 46
Contractor: Electric Power Research Institute (EPRI)
Project Amount: $21,538
Match Amount: $247,683
Contractor Project Manager: Raymond Lings (650) 855-2177
Commission Contract Manager: Jamie Patterson (916) 657-4819
Status: Completed

Project Description:
The purpose of this project is to revise EPRI's "Red Book"—the *Transmission Line Reference Book: 345 kV and Above.* The revision will update the handbook to incorporate the latest operating experiences and technologies, and to ensure that the handbook reflects both domestic and international operating practices and work environments. The revision will add new chapters as appropriate.

The *Transmission Line Reference Book: 345 kV and Above* is recognized worldwide as the leading handbook—the industry standard— on transmission line design. The printed book has a red cover, and has become widely known as the "Red Book" in the industry. The first edition was published in 1975, the second edition in 1982, and the second revised edition in 1987. It has not been revised since then.

This project supports the PIER Program objective of:

- Improving the reliability/quality of California's electricity through updating of the premier guide to transmission line design.

Proposed Outcome:

1. Rewrite and update the book as necessary to incorporate the latest operating experiences and technologies, and to ensure that the handbook reflects both domestic and international operating practices and work environments.

Actual Outcomes:

1. The actual re-write of chapters has started. 40% of the book was re-written in 2002 and the rest will be rewritten in 2003.
2. In August 2002, the various team members met to review progress and to debate face-to-face the structure of various chapters. An advanced draft of the chapter on Electromagnetics was presented, along with a number of "applets"—small software routines designed to demonstrate concepts within the book. Chapter outlines covering Lightning, Live Working, Radio Noise, Audible Noise, Corona Fundamentals and Corona Loss were presented and debated.
3. The editorial panel was formed and met in August.
4. A report was published entitled *Updating the EPRI Transmission Line Reference Book (Red Book)—2002 Progress Report* (1001762), which summarizes progress to date.
5. Additional contracts will be placed for work to start in early January 2003.
6. In January 2003, a review meeting will be held. At that meeting, draft chapters will be presented on Lightning Performance, Corona Phenomena, Radio Noise, and Audible Noise.
7. An Interim Report was published in late 2002.

Project Status:
The project has been completed.

Sagging Line Mitigator (SLiM)

Contract #: 500-98-042
Contractor: Material Integrity Solutions, Inc.
Subcontractors: Power Technology Consultants, LLC : Dariush Shirmohammadi, Ph.D. : Expert Power Engineering Consultant
Contract Amount: $900,000
Match Amount: $303,920
Contractor Project Manager: Manuchehr Shirmohamadi (510) 594-0300
Commission Contract Manager: David Chambers (916) 653-7067
Status: Completed

Project Description:
The purpose of the SLiM project is to develop and test a sagging line mitigator to automatically counteract the sagging of high voltage transmission lines due to high ambient temperature and current flows. The product to be developed has the potential to revolutionize the treatment of sagging overhead transmission lines, instead of retrofitting existing lines or the construction of new lines. SLiM will significantly reduce the risk of forest fires and brownouts caused by sagging lines, increase the efficiency of energy transfer, delay the need for additional line capacity and delay the construction of new lines. Used on new lines, this product will allow reduced tower height and/or increased distance between towers.

This project supports the PIER Program objectives of:

- Improved reliability and quality of California's electricity system by reducing the risk of brownouts (the curtailment of electric deliveries due to line constraints) and power supply interruptions.
- Improved safety of California's electricity by significantly reducing the risk of electrocution and fires caused by sagging transmission and distribution lines.
- Reduced environmental and public health risks/costs of California's electricity system by avoiding the need to build additional transmission towers.

Actual Outcomes:

1. Successfully completed design, development and analysis work for the SLIM device.
2. Conducted successful rigorous prototype testing for applicability proof of concept and design refinements.
3. Develop manufacturing plans for the SLIM device.

Project Status:
The project has been completed. The final report tracking number is "P500-02-074F" and has been published at the following address: http://pier.saic.com/PDF/P500-02-074F.pdf

Transmission & Substation Asset Utilization - Program 38

Contract #: 500-00-023 **Project #:** 47 - 49
Contractor: Electric Power Research Institute (EPRI)
Subcontractors: Siemens Power Transmission & Distribution
Project Amount: $78,518
Match Amount: $191,029
Contractor Project Manager: Aty Edris (650) 855-2311
Commission Contract Manager: Don Kondoleon (916) 654-3918
Status: Completed

Project Description:
This purpose of this project is to demonstrate an advanced controller technology with the potential—if it were applied—to substantially increase power transfer capability on the transmission grid in California and the western region. The Convertible Static Compensator (CSC) is the latest FACTS (Flexible Alternating Current Transmission System) Controller developed under EPRI's FACTS technology development and application program. The CSC is an innovative power electronics-based controller that provides multiple compensating modes, which are needed to securely increase power transfer capability limits of existing transmission systems. The Controller provides flexible dynamic voltage control (to avoid voltage instability), as well as simultaneous real and reactive power flow control on multiple transmission corridors (without risk of transient or dynamic instability). The CSC offers this flexibility by allowing its converters to be connected in shunt, in series, in shunt/series, or in series/series with two lines.

This EPRI project supports demonstration of the world's first CSC—two 100-MVA Voltage Source Converters—which has been installed and is in operation at New York Power Authority's (NYPA's) Marcy Substation in Utica, New York. The CSC is enabling NYPA to mine 240 more MW of power from the grid precisely when they need it most—during contingency situations. Membership in this project provides the Energy Commission with key technical information on installation and operation of the CSC, and integration of the CSC in a power grid.

This project supports the PIER Program objectives of:

- Improving the reliability/quality of California's electricity through innovative technologies, which help to balance the competing needs of maximizing the use of the grid while maintaining the security of the system.
- Improving the safety/reliability of California's electricity system by developing technologies to maintain and enhance system security in the face of increasing traffic and congestion, while avoiding the environmental impacts associated with new transmission lines and corridors.

Proposed Outcomes:

1. Install CSC voltage source converters for shunt and series compensation.
2. Conduct initial field tests.
3. Deliver industry updates on FACTS and FACTS-related activities.
4. Provide practical guidelines to identify potential transmission bottlenecks, identify measurement locations, perform data analysis to determine line performance under adverse conditions, update/revise static ratings, and (if appropriate) implement quasi-dynamic ratings for lines that do not require installing permanent real-time dynamic thermal circuit rating tools.

Actual Outcomes:

1. Convertible Static Compensator:
   - Phase 1 of the project, shunt operation modes providing + Mvar reactive support at the Marcy substation, is complete. The CSC in shunt operation modes is in service.
   - Record and analysis of the CSC operating performance is an ongoing process.
   - Phase 2 of the project, which includes installation of two series transformers and six bypass switches, is in progress.
   - Commissioning tests of the series operation modes are scheduled for January 2003.
2. Information Sharing and Technology Updates.
   - A website named eprifacts.com is currently under development. The website is structured to provide: background information, tutorial information on the FACTS technology concept, benefits assessment, description of the installed FACTS controllers, articles, and what's new/news and announcements.
   - Work is under way to add a link for web-based simulation tool, a three-area transmission network allowing simulation of STATCOM, SSC, and/or UPFC at arbitrary location with different ratings.
   - The 5th FACTS User's Group meeting was held on October 23-25, 2002 in San Diego, CA. A CD-ROM documenting all presentations is available.
3. Identify Transmission Throughput Bottlenecks.
   - A technical progress report—*Quasi-Dynamic Rating Pilot Study* (1001830)—was published.
   - EPRI Solutions has collected the DTCR data from LIPA-Long Island Power Authority, which was used for developing the methodology for Quasi-Dynamic Ratings.
   - This project was reviewed at the last IPF Task Force meeting, August 8-9, 2002 in Minneapolis, MN and will be reviewed again at the next IPF Task Force Meeting, January 16-17, 2003, in Atlanta.

Project Status:

Commission participation in these EPRI projects has been completed.

ESI Projects Completed in 2001

Airports and Other Complex Intermodel Systems

Contract #: 500-00-023 **Project #:** 9 & 44
Contractor: Electric Power Research Institute (EPRI)
Project Amount: $47,498
Match Amount: $199,700
Contractor Project Manager: Andra Michel (650) 855-2101
Commission Contract Manager: McKinley Addy (916) 657-0833
Status: Completed

Project Description:
The purpose of this two-year project is to evaluate and develop new environmental and energy technologies, and to apply existing technologies—such as electric vehicles—to airport infrastructure to reduce pollution and subsequent costs. Aviation is a key sector of California's economy, with important consumer, energy, and air quality impacts. California's largest airports contribute hundred of millions dollars every year to local and regional economies. However, airports face challenges, including the need to reduce pollutant emissions and control operating costs.

Converting ground transportation and other airport equipment to electricity is one solution to these issues. The electrification of airport gates and the use of electric ground support equipment (GSE) and alternative fuel vehicles have been identified as effective emission reduction compliance measures. These measures promote the public good of cleaner air. Additionally, the use of electric GSE offers energy efficiency and operating cost reduction benefits to airports and California's consumers. These benefits foster the achievement of high-priority public policy goals.

However, the increased use of high and variable frequency electric GSE at airports could adversely affect the quality and reliability of airport electric power systems. As a result, the potential impact of electric GSE and other electrification on power system quality must be understood if California airports are to comply with air quality requirements without compromising airport power quality. EPRI's Airport Solutions Target has developed the necessary methodologies and models to assess the feasibility of electrification and the associated economic, environmental, and power quality impacts on an airport-specific basis.

This project supports the PIER Program objectives of:

- Improving the energy cost/value of California's electricity by providing information on efficiency improvements available for use by airports.
- Improving the environmental and public health costs/risks of California's electricity by reducing emissions from the internal combustion engines used by airport facilities by replacing them with electrically-powered equipment.

Proposed Outcomes:

1. Provide key technical and economic information on electrification of GSE and other airport equipment and use of alternative fuel vehicles—including information on new technology development, environmental impacts, power quality issues, application planning and experience, and market penetration.
2. Conduct a Tailored Collaboration entitled Power Quality Impacts of Airport GSE Charging Systems (TC-51441-001-28325). This project will study the existing GSE charging systems at five airports (including four in California) to document the power quality characteristics of the systems and assess their impacts on the primary and secondary electric distribution systems that supply power to the airports and gate areas.

Actual Outcomes:
Technical and Economic Information.

1. EPRI organized a national Electric GSE Market Penetration Issues Round Table Meeting in Washington, DC. The meeting was designed to bring together representatives from airports, airlines, vehicle and component manufacturers, government agencies, standards-making bodies, and utilities to address key issues. The meeting, which was scheduled for September 12, 2001, was cancelled due to the terrorist attacks. However, the nine presentations scheduled to be delivered at the meeting were compiled in a proceedings titled *EPRI Electric GSE Market Penetration Issues Round Table Proceedings: September 2001* (1006002) and delivered to all members. The presentations contain vital information on new technology development, application experience, and power quality issues. A conference call, led by Robert Graham, was open to all Electric GSE Market penetration issues round table meeting members followed the proceedings.
2. A fact sheet—*American Airlines Installs Fast Charging at DFW Airport* (1006011) —was published on one airline's experience with fast charging technology for GSE electrification.
3. EPRI hosted two national workshops of the Electric Bus User Group. These workshops were held on April 16-17, 2001 in Tempe, AZ, and on October 9-10, 2001 in Denver, CO. The events offered participants information on new technologies, energy storage and charging issues, and application experience. The proceedings, titled *Electric Bus Users Group Workshop Proceedings: April 2001* (1006158) and *Electric Bus Users Group Workshop: Proceedings: October 2001,* (1006643), were published.
4. A conference call meeting of the Airport Solutions Target Funders was held on November 19, 2001. Minutes of the meeting are available.

Project Status:
The project has been completed.

Demonstration and Evaluation of Emerging Distributed Energy Technologies

Contract #: 100-98-001 **Project #:** 35
Contractor: Electric Power Research Institute (EPRI)
Subcontractors: San Diego Gas and Electric Company : VFL Technologies, Inc.
Project Amount: $15,000
Contractor Project Manager: Brice Freeman (650) 855-1050
Commission Contract Manager: Laurie ten Hope (916) 654-4637
Status: Completed

Project Description:
The purpose of this project is to obtain information on the performance and operational aspects of technologies targeted for distributed energy resources (DER) applications.

DER refers to the concept of deploying small power generation systems throughout electric distribution and transmission systems. DER technologies, including small generators and energy storage devices located near customer loads, offer considerable promise for California's electric power system. For example, DER could help reduce demand on the state's power grid, improve power quality and reliability, and increase the use of environmentally clean energy.

DER technologies are still relatively new and very little real-world information is available regarding DER-related cost, performance, maintenance and interface issues. To help fill the information gaps, the project team collaborated with six companies including the host, San Diego Gas and Electric (SDG&E), to install, interconnect, and test the DER systems at their facilities to monitor and evaluate performance and cost.

This project supports the PIER Program objectives of:

- Improving the reliability/quality of California's electricity by providing information to support deployment of distributed energy resources to provide peaking power, enhance system reliability, and assure power quality.
- Improving the energy cost/value of California's electricity by assisting in the development/deployment of innovative distributed resource technologies that can potentially provide lower delivered cost electricity than central station power.
- Improving the environmental and public health costs/risks of California's electricity by providing information to support the development and implementation of environmentally preferred distributed generation.

Proposed Outcomes:

1. Obtain first-hand information on the performance and economic aspects of technologies targeted for DER applications.
2. Demonstrate and report on the field operation of a utility distribution system support DER system.
3. Report the performance, cost, and permitting issues of installing DER systems located at end-user facilities and connected in parallel to the utility electric distribution system.
4. Help utilities and end-user hosts gain a better understanding of potential impacts on their electric distribution systems as well as information on performance, emissions, economics, and institutional issues of DER systems, which were unclear at the start of this program.

Actual Outcomes:
This project conducted a field demonstration of DER systems at end-user host sites and a mobile interconnection trailer with a solid-state controller and protection device for utility distribution system support. The project team evaluated two different types of microturbine systems, an advanced internal combustion engine, and a flywheel energy storage system in the end-user demonstration. This program's focus was to gain first-hand experience with the intricacies of integrating DER systems with end-user facilities at the electric bus panel and parallel to the electric distribution circuit.

Project results are presented in an EPRI report, *Demonstration and Evaluation of Emerging Distributed Energy Technologies* (1007043) published in July 2002. The report describes performance, costs, and institutional issues related to deploying DER systems at end-user sites. Although the results highlight the demonstration of DER systems in San Diego, they are applicable to similar installations throughout the United States.

Project Status:
The project has been completed.

Distributed Resources: Information for Business Strategies - Target 34

Contract #: 500-00-023 **Project #:** 10 - 14
Contractor: Electric Power Research Institute (EPRI)
Subcontractors: Arthur D. Little, Inc. : EPRIsolutions : Resource Dynamics Corporation
Project Amount: $271,524
Contractor Project Manager: Dan Rastler (650) 855-2521
Commission Contract Manager: Jairam Gopal (916) 654-4880
Status: Completed

Project Description:
The purpose of this project is to provide the Commission with information and tools to enable California ratepayers and energy providers to realize the full potential of distributed resources (DR)-based business strategies. EPRI involvement in DR research provides the unique access and intelligence necessary to identify new markets niches, improve the use of generation and T&D assets, and evaluate DR-based solutions for commercial and industrial ratepayers and business opportunities for energy providers. The target focuses on creating integrated, dependable, packaged solutions and providing information to better understand the DR market, both locally and globally. This EPRI target provides information to support the planning and deployment of DR projects, analyze DR for retail business applications, understand the impacts of DR on utility distribution systems, and evaluate the integration, management, and control of DR technologies.

This project supports the PIER Program objectives of:

- Improving the reliability/quality of California's electricity by developing generation options that energy providers can utilize to provide unique solutions for peaking power issues, to enhance system reliability (system voltage control), and to assure power quality to their customers.
- Improving the energy cost/value of California's electricity by assisting in the development of innovative distributed resource technologies that can potentially provide lower delivered cost electricity than central station power.
- Improving the environmental and public health costs/risks of California's electricity by assisting in developing fuel cell systems and other environmentally preferred generation technologies to replace traditional central station power.

Proposed Outcomes:

1. Provide strategic information on the DR business environment, trends, technologies, customers, and markets.
2. Compile detailed information to allow analysis of DR for retail business applications.
3. Provide information to assist distribution planners in integrating DR in utility electric distribution systems.
4. Supply information, methodology, and tools to support analysis of DR impacts on electric distribution systems.
5. Conduct market research and provide information on DR markets.
6. Conduct a Tailored Collaboration entitled "Tests and Evaluation of Four Newly Commercialized Distributed Generators in San Diego, CA."
7. Conduct a Tailored Collaboration entitled "Distributed Energy Resources Public Web."

Actual Outcomes:

1. Strategic Information.
   - A quarterly newsletter—Strategic Intelligence Update: DR Business Developments—was published on DR applications, business developments, partnerships, demonstrations, regulatory policy, and electrical interconnection and integration research.
   - An online version of EPRI Distributed Resources Technical Assessment Guide (DR-TAG) was made available. The web-based Guide includes information on product configurations, technology status, development issues, and prospects for future improvements.
   - Educational tech briefs were published on key DR topics.
   - The 2nd Annual Business Venture Forum, an annual national workshop, was held July 25-26 in San Francisco. It provided a forum for utilities, energy companies, equipment manufacturers, and vendors to discuss the latest technology, market, and policy developments.
   - Advisory Group Meetings were held in February, July, and October.
2. Retail Business Strategies.
   - A report—Managing Price Risk with Distributed Resources (1003972)—was published on the potential value of DR as a hedging device for end-use customers.
   - A report—Framework for Evaluating DR Business Cases (1003971)—was published on a decision-making framework for analyzing DR-based business opportunities in the context of a retail portfolio, or as a business unit targeting a defined set of customers with identified needs.
3. Integration of DR in Distribution Systems.
   - A report—Technical Assessment and Evaluation of DR Micro-Grids (1003973)—was published on the technical and economic feasibility of designing and operating micro-grids.
   - A software tool—Distributed Resources Integration Assistant: Version 1.0 (1006540)—was developed to provide useful engineering information, calculators, and screening tools to assist those involved with properly integrating DR into the electric power system.
4. DR Impacts on Distribution Systems.
   - A report—DR Cost Impacts on Transmission and Distribution Systems (1003975)—was published to assess the economic pros and cons of employing DR technologies when T&D system upgrades are needed.
   - A report—Siting of DR Units: Process and Issues (1003974)—was published on the issues and principles involved in the DR siting process and outlines how most tasks can be conducted.
5. Market Research.
   - A report—Market Research in Residential DR Technologies (1003976)—was published on results of primary research into issues facing DR in residential markets with a special emphasis on California markets as leaders in accommodating their behaviors to volatile energy markets.
   - A report—DR Adoption Experience in the Commercial Sector (1003977)—was published on commercial businesses' experience in using DR technologies and the extent to which these technologies met the economic and operations experience of these early adopters.
6. Tailored Collaboration—Evaluation of Five Distributed Generators.
   - A demonstration project was conducted, siting new DER products at end-user facilities with the purpose of collecting end-user experiences and better understanding the steps required to site DER devices. A full complement of performance, emission, power quality, and noise tests were also conducted. The final report is due in January 2002.
7. Tailored Collaboration—DER Public Web.
   - A website containing nearly all the information generated by the EPRI DR targets in the last three years was made available in a well-organized, easy-to-use structure.

Project Status:

The project has been completed.

Emerging Distributed Resource Technologies - Target 33

Contract #: 500-00-023 **Project #:** 2 - 8
Contractor: Electric Power Research Institute (EPRI)
Subcontractors: Gas Research Institute : Nexant, Inc. : Energy International, Inc. : ADI Thermal Power Corporation : American Electric Power : PowerCo US, Inc. : Arthur D. Little, Inc. : National Rural Electric Cooperative Association : Power Computing Systems : Rolls-Royce, Inc. : Southern California Edison : EPRI PEAC Corporation
Project Amount: $461,251
Match Amount: $3,782,757
Contractor Project Manager: Dan Rastler (650) 855-2521
Commission Contract Manager: Jairam Gopal (916) 654-4880
Status: Completed

Project Description:
The purpose of this project is to promote the potential that distributed resources (DR) have to provide a substantial portion of the energy alternatives now demanded by California electricity users. Both energy service providers and customers need accurate and unbiased information on the benefits and liabilities associated with commercially available and emerging distributed resource technologies. DR technologies offer third-party energy service providers and energy customers innovative solutions to their energy service needs. EPRI's Emerging DR Technologies target provides detailed information on commercially mature reciprocating engines and gas turbines, and emerging microturbines and fuel cell systems technologies. To gather this information, EPRI assesses advanced DR components, performs technology validations, and leads pre-commercial development of technologies that offer high pay-off. As a member, the Energy Commission will obtain intelligence in three distinct areas: rapid changes in technology, development of new distributed resources, and post-R&D commercialization initiatives. This target examines a balanced portfolio of near, intermediate, and long-term options.

This project supports the PIER Program objectives of:

- Improving the reliability/quality of California's electricity by developing generation options that energy providers can utilize to provide unique solutions for peaking power issues, to enhance system reliability (system voltage control), and to assure power quality to their customers.
- Improving the energy cost/value of California's electricity by assisting in the development of innovative distributed resource technologies that can potentially provide lower delivered cost electricity than central station power.
- Improving the environmental and public health costs/risks of California's electricity by assisting in developing fuel cell systems and other environmentally preferred generation technologies to replace traditional central station power.

Proposed Outcomes:

1. Provide unbiased accurate information on emerging DR technologies to increase customer choice and enable competition.
2. Provide methods and guidelines for comparing and testing technologies to improve evaluation of emerging DR technologies.
3. Accelerate development and application of advanced engines for power generation and T&D support through monitoring of technology development and benchmarking of new products.
4. Support application of small gas turbine technology (1-10 MW) by documenting existing installations.
5. Accelerate the development of microturbine technologies by documenting the performance of current and emerging microturbines.
6. Bring to market readiness fuel cell technologies that include polymer electrolyte membrane (PEM) fuel cell systems and ultra-high efficient solid oxide fuel cells (SOFC).
7. Accelerate development of fuel cell energy storage systems through technology assessment and preliminary system design.

8. Ensure the efficient and safe application of distributed resources by compiling up-to-date information on interconnection hardware.
9. Conduct a Tailored Collaboration (TC) project entitled "Emissions Testing and Certification Guidelines for DG Generators."

Actual Outcomes:

1. Unbiased Information.
   - A quarterly newsletter—*Strategic Intelligence Update: Technology Development*—was published on the latest breaking information on DR technology and research development.
   - An online version of *EPRI Distributed Resources Technical Assessment Guide (DR-TAG)* was made available to CEC staff. The web-based Guide includes information on product configurations, technology status, development issues, and prospects for future improvements.
   - A technical report—*Enhancing DR Value Through Heat Recovery* (1003958)— was published on heat recovery options that could improve the performance and efficiency of DR technology.
   - The 2nd Annual Business Venture Forum, an annual national workshop, was held July 25-26 in San Francisco. It provided a forum for utilities, energy companies, equipment manufacturers, and vendors to discuss the latest technology, market, and policy developments.
   - Advisory Group Meetings were held in February, July, and October.
2. Evaluation Guide.
   - The *Guide for Test and Evaluation of DR Technology Performance* (1003963) was published, providing a uniform methodology and references for consistent evaluating and testing of emerging DR technologies.
3. Advanced Engines.
   - A report—*Insights on Development of Advanced IC Engines* (1003959)—was published to report on state-of-the-art engine technology under development at manufacturers, U.S national laboratories, and universities. The report assesses engine R&D activities for their potential to improve engine performance and/or reduce emissions.
   - A report—*Performance Data: Benchmarking of New and Emerging Engine Products* (1003960)—was published on performance characteristics of leading engine products from every major reciprocating engine manufacturer.
   - A report—*Case Studies of IC Engines for T&D Support* (1003961)—was published on utility application experiences and lessons learned with engines and combustion turbines used for T&D support.
4. Small Gas Turbines (1-10 MW) for Distributed Power Markets.
   - A report—*Case Studies of CTs for T&D Support* (1003962)—was published to document one utility's efforts to select, site, install, and operate a mobile combustion turbine at a rural substation.

5. Microturbines.
   - A report—*Performance and Electrical Characterization Tests on a Microturbine Commercial Prototype: Part III* (1003964)—was published to characterize operation of a grid parallel/grid independent commercial MTG.
   - A report—*MTG Field Test Program* (1006394)—was published to ascertain the cost, performance, durability, reliability, and maintainability of various microturbines in an actual customer environment.
   - A report—*Test and Evaluation of Two Microturbines at Customer Sites* (1006591)—was published to report the test results of two microturbines operating at customer sites. Also, to report the problems and other challenges encountered, along with customer viewpoints.
6. Fuel Cell Distributed Power Systems.
   - A report—*Assessment of SOFC-CT Hybrids* (1003965)—was published on the technical and performance characteristics of a 250-kW SOFC-microturbine system.
   - A report—*Assessment of SOFC Systems for C&I Applications* (1003966)— was published to provide validated bench-scale and field test data on small SOFC cogeneration systems.
   - A report—*5 kW Fuel Cell for Telecom and Residential Markets* (1003967)— is in process, and will be published March 31, 2002. The report will describe performance, cost, and durability information on emerging residential fuel cell systems.
   - A report—*50-kW PEM Prototype Fuel Cell System, Interim Report* (1003968)—is in process and will be published March 31, 2002. The report will describe the performance of PEM fuel cell systems for commercial and industrial applications.
7. Fuel Cell–Energy Storage Systems.
   - A report—*Technology Assessment of Fuel Cell–Energy Storage Systems* (1004544)—was published, detailing the performance of a PEMFC-Ultracapacitor system for stationary battery replacement markets.
8. Interconnection Hardware.
   - A report—*Technology Assessment of Interconnection Products for Distributed Resources* (1003969)—was published to provide an annual report on vendors, product development efforts, and R&D issues related to interconnection and switchgear technology.
   - A report—*Capacitor-Stabilized Soft Transfer Interface System for Distributed Resources* (1003970)—was published to report on development and testing of a prototype device that can improve the performance, reliability, and economics of DR systems.

Project Status:
The project has been completed.

Energy Source Stabilizer (ESS)

Contract #: 500-97-012 **Project #:** 14
Contractor: Edison Technology Solutions/Southern California Edison
Project Amount: $250,000
Contractor Project Manager: Moham Kondragunta (626) 815-0507
Commission Contract Manager: Linda Davis (916) 654-3848
Status: Completed

Project Description:
This project developed and demonstrated an Energy Source Stabilizer (ESS) that functions through a generating machine governor or other electronics-controlled power device to stabilize electrical frequency oscillations between various areas. Inter-area oscillations can cause very wide spread and costly power outages that may last for many days. Control of these dynamic oscillations through the generating machine governors is more effective and inexpensive than the existing power system stabilizers that function through the generating machine excitation system. Once proven, the ESS units can be installed on all generating machines having state-of-the-art rapid response governors.

This project supports the PIER Program objectives of:

- Improving the reliability/quality of California's electricity by reducing the incidence of large-scale power outages.
- Improving the energy cost and value of California's electricity by providing a low-cost means of improving system reliability.

Proposed Outcome:

1. Stabilize low frequency dynamic system oscillations by modulating the real power of generators, thereby improving system stability and reliability.

Actual Outcomes:

1. Two Energy Source Stabilizers (ESS) were installed at Alamitos Generating Station in Southern California and ESS performance was monitored during system disturbances to validate the working of ESS.
2. The ESS operated as expected to dampen oscillations that otherwise may have increased to cause a widespread power outage.
3. Multiple ESS units need to be installed throughout the Western Systems Coordinating Council (WSCC) system to achieve the reliability benefits possible with this technology. It is estimated that the increase in energy import capability due to the reliability improvements of installing ESS can save California electric customers approximately $15-20 million per year.

Project Status:
The project has been completed.

Enterprise Infrastructure Security - Target 86

Contract #: 500-00-023 **Project #:** 15
Contractor: Electric Power Research Institute (EPRI)
Project Amount: $45,000
Match Amount: $1,209,615
Contractor Project Manager: Jim Fortune (650) 855-2500
Commission Contract Manager: Laurie ten Hope (916) 654-4637
Status: Completed

Project Description:
The purpose of this project is to address concerns over the security of the energy industry's electronic infrastructure against cyber and physical threats. These threats range from corporate espionage by competitive rivals to sabotage by hackers or terrorists. Immediate concerns center on the vulnerabilities of electronic operations systems such as supervisory control and data acquisition (SCADA) and plant distributed control systems (DCS) and their interconnectivity with corporate business systems. As the energy industry becomes increasingly automated and electronically connected, a concerted cyber attack could be catastrophic from business, customer and national security perspectives. This project identifies and addresses security issues through a series of working group meetings that include staff and managers from the Energy Commission and other agencies, with the ultimate goal of developing more robust electronic security programs. Meetings and workshops provide forums for sharing information on best practices, lessons learned, and vulnerability assessment results.

This project supports the PIER Program goal of:

- Improving the reliability of California's electricity by leveraging the collective knowledge of the participants to develop strategies for protecting the state's critical electric power infrastructure against cyber and physical threats.

Proposed Outcomes:

1. Organize and facilitate workshops for collaborative exchange of information and ideas to support the development of robust security programs.
2. Provide guidelines, policies and procedures reflecting the collective knowledge of the industry for the following activities:
   - Specifying equipment procurement.
   - Performing tradeoffs between equipment performance and security.
   - Interfacing between information technology (IT) and operating systems.
3. Enhance the dedicated EIS website with expanded content to provide more and higher value information.
4. Engage key operating systems vendors and collaboratively develop security-based functional specifications for new hardware and software.
5. Develop a risk assessment framework to help decision makers understand and evaluate the costs and benefits of different security measures.

Actual Outcomes:

1. Workshops – Four topical workshops were delivered in 2001.
2. Guidelines, Policies and Procedures – The following technical reports were published in 2001 and are available on the members-only EIS web site:
   - Equipment Procurement Guidelines.
   - Performance/Security Tradeoff Guidelines.
   - Interfacing IT and Operations Systems Guidelines.
   - Generic Policies and Procedures.
3. Website.
   - The EIS member website was expanded.
4. Security-Based Specifications.

- A technical report was published that describes generic specifications for operating system software and hardware resulting from the collaborative efforts of vendor action groups.

5. Risk Assessment Framework.
   - A web-accessible risk assessment framework was developed.

Project status:
The project has been completed.

Flexible AC Transmission Systems - Target 38A

Contract #: 500-00-023 **Project #:** 16
Contractor: Electric Power Research Institute (EPRI)
Subcontractors: Siemens Power Transmission & Distribution
Project Amount: $62,500
Match Amount: $274,237
Contractor Project Manager: Aty Edris (650) 855-2311
Commission Contract Manager: Don Kondoleon (916) 654-3918
Status: Completed

Project Description:
The purpose of this project is to demonstrate an advanced controller technology with the potential—if it were applied—to substantially increase power transfer capability on the transmission grid in California and the western region. The Convertible Static Compensator (CSC) is the latest FACTS (Flexible Alternating Current Transmission System) Controller developed under EPRI's FACTS technology development and application program. The CSC is an innovative power electronics-based controller that provides multiple compensating modes, which are needed to securely increase power transfer capability limits of existing transmission systems. The Controller provides flexible dynamic voltage control (to avoid voltage instability), as well as simultaneous real and reactive power flow control on multiple transmission corridors (without risk of transient or dynamic instability). The CSC offers this flexibility by allowing its converters to be connected in shunt, in series, in shunt/series, or in series/series with two lines.

This EPRI project supports demonstration of the world's first CSC—two 100-MVA Voltage Source Converters—which has been installed and is in operation at New York Power Authority's (NYPA) Marcy Substation in Utica, New York. The CSC is enabling NYPA to mine 240 more MW of power from the grid precisely when they need it most—during contingency situations. Membership in this project provides the Energy Commission with key technical information on installation and operation of the CSC, and integration of the CSC in a power grid.

This project supports the PIER Program objectives of:
- Improving the reliability/quality of California's electricity through innovative technologies, which help to balance the competing needs of maximizing the use of the grid while maintaining the security of the system.
- Improving the safety/security of California's electricity system by developing technologies to maintain and enhance system security in the face of increasing traffic and congestion, while avoiding the environmental impacts associated with new transmission lines and corridors.

Proposed Outcomes:
1. Install CSC voltage source converters for shunt and series compensation.
2. Conduct initial field tests.

Actual Outcomes:
1. Phase 1 of the project (Static Synchronous Compensator [STATCOM] operation) was successfully commissioned in June this year.
2. CSC in the shunt operation modes (+/-200 Mvar STATCOM) is now in service, and is being monitored for fine-tuning the control and protection system.
3. A dedication ceremony was held June 21 to mark the startup of the first phase of the CSC.
4. A technical progress report Convertible Static Compensator (CSC) for New York Power Authority, EPRI no. 1001970, was published.
5. A review of the CSC operation was presented at the FACTS Users Group Meeting on October 18-19, 2001 in New York City.

6. An EPRI "Innovators" document, quantifying the benefits of the CSC, is currently under development and will be published by the end of December 2001 or early January 2002.
7. Work is under way on the series operation modes—Static Synchronous Compensator, Unified Power Flow Controller, and Interline Power Flow Controller.
8. Installation of two bypass switches is under way.

Project Status:
The project has been completed.

Grid Operations and Management - Target 39

Contract #: 500-00-023 **Project #:** 17
Contractor: Electric Power Research Institute (EPRI)
Subcontractors: ABB Power T&D Co., Inc. : Best Systems, Inc. : Bonneville Power Administration : Decision Systems International : Hoffman Publications, Inc. : Incremental Systems : Iowa State University : Quality Training Systems : Xtensible Solutions, Inc.
Project Amount: $201,923
Match Amount: $5,156,709
Contractor Project Manager: Stephen Lee (650) 855-2486
Commission Contract Manager: Don Kondoleon (916) 654-3918
Status: Completed

Project Description:
The purpose of this project is to support EPRI's collaborative program in Grid Operations and Management, which is developing new tools and information that could be used to more efficiently and reliably operate the electricity power grid in California and the western region. EPRI products enable power system operators to cost-effectively upgrade systems, merge databases from different sources, exchange information in real time, and better manage systems during and following emergencies. To ensure the grid is capable of supporting the competitive market, EPRI software also offers capabilities for more accurately estimating and monitoring power system transactions. In addition, as the number and scale of transactions on the California grid increase, and as system security is challenged, EPRI provides new information and approaches for ensuring the reliability of the system.

This project supports the PIER Program objectives of:

- Improving the reliability/quality of California's electricity through innovative technologies, which help to balance the competing needs of maximizing the use of the grid while maintaining the security of the system.
- Improving the energy cost/value of California's electricity by merging new tools for grid functionality with information for operating in the new competitive marketplace. EPRI technology development programs will help to increase transmission capacity across constrained interfaces, thus reducing grid-operating costs, while enhancing system security.

Proposed Outcomes:

1. Provide software and information to reduce the costs and improve the efficiency of control center operation.
2. Provide software, methods, and information to enhance the transaction without impact on security.
3. Provide new methods and information to improve the security of the system and avoid management capabilities of transmission system operations, and to allow increased transactions system failures.

Actual Outcomes:

1. Reduce the Costs and Improve the Efficiency of Control Center Operations.
   - Three sets of tests were conducted that demonstrated a common language for information sharing among utility applications. In the tests software vendors exchanged versions of the Common Information Model (CIM) translated into the industry standard eXtensible Markup Language (XML), which permits the exchange of power system models in a format that any Energy Management System can understand using Internet or Microsoft technology.
   - A proposal was developed for a CIM standard, which would permit assembling diverse sources of enterprise data into a common database.
   - Two reports were produced on changes necessary to the existing standard for the real-time standard for data exchange.

- Version 2.0 of EPRI's GOP Graphics System was developed and tested. The software, which provides a standard Graphical User Interface (GUI) for any EPRI gird operations software, was upgraded to allow remote access to applications.
- Two products were developed to educate operators in emergency system management and restoration: the Tutorial for System Restoration and Version 2.0 of the Operator Training Simulator (OTS).
- *Instructor Guidelines for Use of an Operator Training Simulator* was published.
- A tri-annual newsletter was published on new software programs and methods for improved transmission grid operation.

2. Enhance Transaction Management.
   - Two reports were published on design specifications for a Topology Estimator and a beta version of Topology Estimator software was developed. This product will enable accurate estimate of the real-time network topology status, which is crucial for correct scheduling of generations and transactions.
   - EPRI participated in industry collaborative efforts to develop electronic scheduling capabilities, including Version 1.4 of the transaction management software Open Access Same-time Information System (OASIS) software.
3. Improve System Security.
   - A report was published that summarizes the 15 major accomplishments of EPRI's Security Mapping and Reliability Index Evaluation (SMRIE) project, which provides system operators with the capacity to monitor security levels quickly and accurately.
   - A report was published that describes on-line capabilities for detecting high-risk, or N-k, contingencies that result in unscheduled outages of multiple components within bulk high-voltage electric transmission systems.
   - A report was published that provides a systematic procedure for determining the effects on an entire power network of hidden failures in protection systems.

Project Status:
The project has been completed.

Grid Planning and Development - Target 40

Contract #: 500-00-023 **Project #:** 18
Contractor: Electric Power Research Institute (EPRI)
Subcontractors: Best Systems, Inc. : Decision Systems International : Electricite de France : EPRIsolutions : P Plus Corporation : Southern Company Services, Inc. : Vanessa MacLaren-Wray, dba
Project Amount: $98,077
Match Amount: $4,282,593
Contractor Project Manager: Stephen Lee (650) 855-2486
Commission Contract Manager: Don Kondoleon (916) 654-3918
Status: Completed

Project Description:
The purpose of this project is to increase the speed and efficiency of planning tools. Grid planning cycles today in California and throughout North America are continually being compressed. To make effective decisions under these conditions, power system planners need tools that allow them to rapidly obtain and process information, solve complex problems, and, in some cases, provide a sound business justification for their decisions. In addition, planners must often seek to maximize the value of their power grid assets while at the same time maintaining system reliability.

EPRI products in this area are designed to meet new grid planning needs in California and elsewhere by increasing the speed and efficiency of planning tools. For example, one product will help planners take advantage of advances in grid operations tools by improving capabilities for sharing real-time data with grid operations applications. Other products are increasing capabilities of existing software for simulation and analysis of grid conditions. EPRI is also strengthening capabilities for evaluation of grid security and providing new tools for conducting cost/benefit studies. The one-day workshop sponsored by this target in association with the Energy Commission provided a large public forum for evaluation of alternative wholesale market structures for California.

This project supports the PIER Program objectives of:

- Improving the reliability/quality of California's electricity through innovative technologies, which help to balance the competing needs of maximizing the use of the grid while maintaining the security of the system.
- Improving the energy cost/value of California's electricity by merging new tools for grid functionality with information for operating in the new competitive marketplace. EPRI technology development programs will help to increase transmission capacity across constrained interfaces, thus reducing grid-operating costs, while enhancing system security.

Proposed Outcomes:

1. Develop and upgrade grid planning software and methods to increase the speed and efficiency of their analytical capabilities and improve their ease of use.
2. Enhance grid planning software used for assessing transmission system reliability.
3. Improve grid planning software with capabilities for cost/benefit analyses of network additions and constraints.
4. Conduct a co-funded project entitled "Workshop on Exploring Alternative Wholesale Market Structures for California."

Actual Outcomes:

1. Improve Software Efficiency and Ease of Use.
   - Two mainline planning applications—IPFLOW and DYNAMICS—were integrated with a database compliant with the Common Information Model (CIM), enabling these planning applications to utilize real-time operating data and share data with operators.
   - New computational techniques to increase analysis speed were developed for a restructured version of the Electromagnetic Transients Program (EMTP), a software widely used for simulating and identifying solutions for high-speed transients. *Restructured Electromagnetic Transients Program Progress Report: (EMTP-RV) (1001989).*
   - Object-oriented technology was applied to the Power Systems Analysis Package (PSAPAC) software, which will increase the processing efficiency and substantially reduce the cost of development.
   - Version 6.0, incorporating an improved graphical user interface, was developed for the Interactive Power Flow (IPFLOW) program, which supports a family of planning applications, including ETMSP, VSTAB, and SSSP.
   - Version 2.0 of EPRI's GOP Graphics System was developed, providing a standard graphical user interface for all EPRI grid planning applications.
   - Software support was provided to users of EPRI's grid planning and development software, including ongoing distribution and maintenance, user group support, and software enhancements.
   - A triannual newsletter was published on new software programs and methods for improved transmission grid planning.
2. Strengthen Capabilities for Reliability Assessment.
   - A report –*Restructured Transmission Reliability Evaluation for Large-Scale Systems (TM) (TRELSS (TM)): An Implementation Plan (1001987)* - was published on progress in upgrading EPRI's Transmission Reliability Evaluation for Large-Scale Systems (TRELSS)—commonly used for assessing reliability of bulk power systems—to update its computational techniques, GUI, database management, and use of object-oriented technology.
   - A report - *Modeling and Diagnosis Methods for Large-Scale Complex Networks: EPRI/DoD Complex Interactive Networks/Systems Initiative: Second Annual Report (1006092)* – was published that presents progress on modeling and diagnosis methods for large-scale complex networks.
   - A report - *Intelligent Management of the Power Grid: An Anticipatory, Multi-Agent, High Performance Computing Approach: EPRI/DoD Complex Interactive Networks/Systems Initiative: Second Annual Report (1006091)* – was published that describes the progress made in understanding the grid as a customer-driven, anticipatory system.
   - A report - *Minimizing Failures While Maintaining Efficiency of Complex Interactive Networks and Systems: EPRI/DoD Complex Interactive Networks/Systems Initiative: Second Annual Report (1006093)* - was published that discusses minimizing failures while maintaining efficiency of complex interactive networks and systems.
   - A report - *Context-Dependent Network Agents: EPRI/DoD Complex Interactive Networks/Systems Initiative: Second Annual Report (1006094)* - was published that presents progress on developing and demonstrating "context-dependent network agent" (CDNA) technology.
   - A report - *From Power Laws to Power Grids: A Mathematical and Computational Foundation for Complex Interactive Networks: EPRI/DoD Complex Interactive Networks/Systems Initiative: Second Annual Report (1006095)* – was published that focuses on understanding the behavior of large-scale complex interactive networks and investigating their mathematical underpinnings.
3. Enhance Capabilities for Cost/Benefit Analyses.

- Version 5.0B of EPRI's DYNATRAN software (1001988)—which models economic costs and benefits of network constraints and additions—was developed, providing new computational capabilities.

4. Conduct Workshop on Alternative Marketing Structures.
   - EPRI facilitated a 1-day workshop on November 7, 2001, to explore alternative power market structures for California. The workshop created a large public forum that featured two presentations on new research, three panel discussions with experts from throughout the state, and an audience of about 100 attendees representing a broad cross-section of industry interests.

Project Status:
The project has been completed.

Interconnection Requirements for Distributed Energy Resources

Contract #: 700-99-010
Contractor: Onsite Sycom Energy Corporation
Contract Amount: $395,085
Contractor Project Manager: Crisman Cooley (805) 683-0938
Commission Contract Manager: Jon Edwards (916) 654-4851
Status: Completed

Project Description:
The purpose of the FOCUS-I project was to identify the barriers to Distributed Generation (DG) and make recommendations for removing those barriers, in the areas of interconnection, environmental review, and permit streamlining. This effort is critical for making DG, especially units smaller than 1 megawatt in size, a viable source of power for California in the future.

FOCUS-I is divided into the areas of:

1. Interconnection.
2. California Environmental Quality Act (CEQA) Review, Building Permitting and Air Permitting.

The interconnection portion of the FOCUS-I effort achieved 100% consensus on technical issues and 98% consensus on non-technical issues. The workgroup drafted Revised Rule 21 in interim and final versions. The California Public Utilities Commission adopted both late in 2000. Interconnection projects now use Revised Rule 21 for all DG interconnections in Investor-Owned Utility areas in California. Revised Rule 21 is estimated to have achieved approximately 50 percent efficacy in cost reduction, an average reduction in costs of approximately 37 percent for interconnection across all project sizes. The CEQA Review and permit streamlining tasks successfully identified all of the major permitting barriers and provided recommendations for their removal. One of the most important findings of the CEQA Review/Streamlining task is that training for regulators is essential to streamlining the DG siting process.

The project supports the PIER Program objectives of:

- Improving the reliability/quality of California's electricity system.
- Improving the availability of energy and capacity, as well as reducing its (wholesale) cost.
- Improving the safety of California's electricity by allowing DG to interconnect safely.
- Improving the positive impact on California's economy by providing greater power availability with more options for electricity users at lower DG installation costs.

Proposed Outcomes:

- Identify the barriers to Distributed Generation (DG).
- Make recommendations for removing those barriers, in the areas of interconnection, environmental review, and permit streamlining.

Actual Outcomes:

1. The outcomes resulting from the Interconnection portion of the FOCUS-I project included:
    - Facilitating consensus on the technical issues of interconnection.
    - Making interconnection a single uniform process which is internally consistent and predictable statewide.
    - Providing a method of Simplified Interconnection.
    - Exploring the role of advanced communications and metering for interconnection scheduling and dispatch.
    - Replacing the current prescriptive Interconnection Requirements (IRs) with Performance-Based Interconnection Requirements (PBIRs).

- Lowering the cost of interconnection.
- Fulfilling the need for interim standards.
- Addressing safety issues.
- Defining the scope and feasibility of type testing.
- Accelerating DG adoption by training and informing government agencies.
- Defining the scope of technologies covered by the Rule 21.
- Making changes to utility tariffs proceeding from interconnection rules.
- Facilitating interconnection of small units.
- Eliminating utility discretion of study fees.

2. The outcomes resulting from the CEQA Review and Permit Streamlining portion of the FOCUS-I project included:
   - Identifying barriers and proposing solutions to streamline the CEQA Review and Land-Use Approval process.
   - Identifying barriers to DG in the building permitting process and producing recommendations for removing or mitigating those barriers.
   - Identifying barriers to DG in the air permitting process and producing recommendations for removing or mitigating those barriers.

Project Status:
This contract was completed on June 30, 2001. Recommendations were made in the final report for follow-on work to conduct case studies and further refinement of Rule 21. The case studies are needed to characterize the electrical effects of DG units on the distribution system. This follow-on work is being conducted in FOCUS II, contract #500-00-013.

Light-Activated Surge Protection Thyristor for Distribution System Reliability

Contract #: 500-98-038
Contractor: OptiSwitch Technology, Inc.
Subcontractors: SRI International : Telecom Data. : Silicon Power Corporation
Contract Amount: $494,239
Match Amount: $93,292
Contractor Project Manager: David Giorgi (858) 452-8787
Commission Contract Manager: Jon Edwards (916) 654-4851
Status: Completed

Project Description:
The purpose of this project was to determine whether it is technically and economically feasible to replace electronically activated surge protection thyristors currently installed on high-power transmission and distribution systems with the improved custom light activated surge protection thyristors. Specifically, this Contractor designed, fabricated, and laboratory tested the
LASPT to determine if it has superior technical performance characteristics to that of a conventional thyristor.

This project supports the PIER Program objective of:

- Improving the reliability/quality of California's electricity system by lowering the state's vulnerability to catastrophic outages by preventing cascading power failures due to rapid surges. This project also supports the PIER Program's strategic energy research objective under the revolutionary science attribute of designing and manufacturing a unique optical coupling to complete the development of the custom LASPT.

Proposed Outcomes:

1. Design, fabrication, and laboratory testing of a light activated surge protection thyristor.
2. Exhibit a surge response rate of 10 k (kilo) amps per microsecond (10 kA/µs).
3. Exhibit a peak current rate of 15 k (kilo) amps (15kA).
4. Exhibit minimum blocking voltage capability of 2700 volts (V).

Actual Outcomes:

1. The project exceeded the contract performance requirements at three testing levels:
   - The first requirement exceeded the "Blocking Voltage parameter by 63%. The contract requirement was 2,700 volts, and the measured result was 4,400 volts.
   - The second requirement exceeded the Peak Current parameter by 213%. The contract requirement was 15,000 amperes, and the measured was 47,000 amperes.
   - The third requirement exceeded the Rate of Rise of Current parameter by 420%. The contract requirement was 10,000 amperes/microsecond, whereas the measured was 52,000 amperes/microsecond.
2. The final objective was to determine the production unit price for the LASPT device. The cost was $1,200 per device for several hundred units and $700 for high volume production.

Project Status:
This PIER contract is complete. LASPT is seeking commercial partners.

Phasor Measurement Units

Contract #: 500-97-012 **Project #:** 12
Contractor: Edison Technology Solutions/Southern California Edison
Project Amount: $150,000
Contractor Project Manager: Moham Kondragunta (626) 815-0507
Commission Contract Manager: Linda Davis (916) 654-3848
Status: Completed

Project Description:
This project demonstrated real-time monitoring and potential of future control of the Western Systems Coordinating Council (WSCC) electric power grid using Phasor Measurement Units (PMUs), which are low-cost sensors that measure voltage, current phase angles and magnitudes that are time tagged for relative comparison between geographically distant locations in Southern California and Oregon.

The PMUs communicate real-time data to a Phasor Data Concentrator (PDC) at very high speed using communication systems from all the monitoring sites. The system will allow various energy control centers and systems to monitor the entire WSCC system and will help to provide information to prevent wide scale power outages. The project will develop a system to pool data from all major WSCC members and make it available to all participating members for post-disturbance analysis.

This project supports the PIER Program objectives of:

- Improving the reliability/quality of California's electricity by allowing regional energy control centers and systems to monitor the entire WSCC system.
- Improving the energy cost/value of California's electricity by reducing wide scale power outages.

Proposed Outcomes:

1. Develop a system that facilitates real-time monitoring of regional transmission facilities.
2. Develop low-cost sensors and software for use with a high-speed communication system that allows utilities and eventually regulators to monitor the status of regional transmission and distribution lines.

Actual Outcome:

1. Two PMUs installed in Southern California Edison (SCE) with communication systems resulted in data collected at a very high speed from all the monitoring sites for viewing grid disturbance data of the Bonneville Power Administration in Oregon and at SCE in Southern California.

Project Status:
The project has been completed.

Power Quality Impacts of Airport GSE Charging Systems

Contract #: 100-98-001 **Project #:** 33
Contractor: Electric Power Research Institute (EPRI)
Subcontractors: Georgia Tech/National Electric Energy Testing Research & Applications Center (NEETRAC)
Project Amount: $91,500
Contractor Project Manager: Andra Michel (650) 855-2101
Commission Contract Manager: McKinley Addy (916) 657-0833
Status: Completed

Project Description:
This project will study the existing GSE charging systems at five airports (including four in California) to document the power quality characteristics of the systems and assess their impacts on the primary and secondary electric distribution systems that supply power to the airports and gate areas.

This project supports the PIER Program objective of:

- Improving energy cost/value.

Proposed Outcomes:

1. EPRI hosted monthly conference call meetings that brought together airport and utility participants, as well as representatives from the Energy Commission, EPRI, and the subcontractor, NEETRAC, for project status reporting and planning for future tasks. Minutes of each meeting were compiled and distributed to participants.
2. Task 1 (Data Collection) was completed. Data recorders were installed and data collected at three airports—San Francisco, Sacramento, and Orange County. Arrangements for data collection at airports in Los Angeles and Dallas/Fort Worth are ongoing. A report – Power Quality Characteristics of GSE Charging Systems – is in draft.
3. Task 2 (Model Development and Validation) is scheduled to be completed February 28, 2002. Task 3 (Case Studies A) is scheduled to be completed May 31, 2002. Tasks 4 (Case Studies B) and 5 (Technology Transfer) have not yet been funded by the Commission.

Actual Outcomes:

1. This study documented the characteristics of electric GSE charging systems at five airports (including four in California) and assessed their impacts on the secondary and primary electric distribution systems that supply power to the airports and their gate areas. The findings will help airport authorities to determine the least-costly, most energy efficient, and most reliable methods to supply electric power to airport gate areas. The findings are summarized in an EPRI technical report—*Power Quality Impacts of Airport Ground Support Equipment Charging Systems* (1007294).

Project Status:
The project has been completed.

ESI Projects Completed in 2000

Airport Solutions

Contract #: 100-98-001 **Project #:** 2
Contractor: Electric Power Research Institute (EPRI)
Subcontractors: Hawaiian Electric Company, Inc. : Carey Transportation : Henry C. Larry
Project Amount: $128,000
Match Amount: $428,610
Contractor Project Manager: Layla Sandell (650) 850-2756
Commission Contract Manager: McKinley Addy (916) 657-0833
Status: Completed

Project Description:
The purpose of this project is to develop new environmental and energy technologies and apply existing technologies, such as electric vehicles, to airport infrastructure to reduce pollution and subsequent costs. In addition, the project will develop improvements to airport efficiency, productivity and safety. Commercial airports are microcosms of all sectors of the electricity marketplace, are major energy users, and are of vital importance to the economic health of their surrounding community. The contribution to local and regional economies from California's largest airports is hundreds of millions dollars every year. However, airports face new and ongoing challenges. Citizens in surrounding communities question the impacts of airports on their quality of life. Reducing overall pollutant emissions from airport facilities has become a
high priority issue. These issues could limit airport growth and in turn impact local and regional economies.

Converting ground transportation and other airport equipment to electricity is one solution to these issues. Inside terminals, the installation of electrically powered equipment can improve indoor air quality, reduce HVAC system operating costs, and prevent disruptions in power quality-sensitive equipment. Outside terminals, the use of electrified equipment and vehicles can provide annual operating cost savings exceeding $500,000. In addition, emission reductions of up to 80 percent could be expected at airports that convert much of their ground transportation and equipment to electricity. EPRI's Airport Solutions Target has developed the necessary methodologies and models to assess the feasibility of electrification and the associated economic and environmental benefits on an airport-specific basis. Through the development and deployment of electrotechnologies, sustainable growth of airports will be enhanced, and energy savings will be attained.

This project supports the PIER Program objectives of:
- Improving the energy cost/value of California's electricity by providing information on efficiency improvements available for use by airports.
- Improving the environmental and public health costs/risks of California's electricity by reducing emissions from the internal combustion engines used by airport facilities by encouraging replacement with electrically-powered equipment.

Proposed Outcome:
1. Provide information on energy solutions to support the improvement and growth of California airports.

Actual Outcomes:
1. Information on energy solutions for airports.
   - EPRI organized a pioneering project to electrify American Airlines airport ground support equipment (GSE) at Detroit Metro Airport. This first-of-its-kind project electrified 132 pieces of GSE by the end of 2000, and is scheduled to electrify the airline's entire fleet of 1070 vehicles over the next five years. Case study results
     were published.
   - EPRI hosted an Electric Ground Support Equipment Market Penetration Issues Round Table in June 2000 in Sacramento, CA. The meeting brought together more than 40 representatives

of California airports, airlines, vehicle and component manufacturers, a standards-making body, and utilities to address key issues. A proceedings of the meeting was published. A second round table was held in October 2000 at LaGuardia Airport.

- The latest information was received from the FAA's Inherently Low-Emission Vehicle (ILEV) pilot program, which seeks to achieve environmental benefits through the use of low-emission vehicles.
- A life-cycle cost-evaluation model and spreadsheet were developed to compare life-cycle costs of electric versus internal combustion-based GSE fleets under different scenarios of operation, thereby assessing the economic benefits of the cleaner airport vehicles.
- EPRI participated in the planning of a GSE Data Collection Project with Southern California Edison to meter equipment and collect performance, battery management, and metering data.
- EPRI participated in the planning of a 12-month Power Quality Impact Study involving the characterization of electric GSE charging systems.
- Information was provided on the environmental benefits of ozonation of cooling towers at an airport in Shreveport, Louisiana.
- EPRI participated in the National Electric Vehicle Association Infrastructure Working Council (IWC) GSE connector standardization meetings to develop functional specifications for electric GSE connectors, thereby providing a supporting infrastructure for electric GSE, and ensuring safety and reliability of fast charging.

Project Status:
The Commission's participation in this target ended December 31, 2000.

Development of a Composite Reinforced Aluminum Conductor

Contract #: 500-98-035
Contractor: W. Brandt Goldsworthy & Associates, Inc.
Contract Amount: $75,000
Match Amount: $65,000
Contractor Project Manager: Clem Hiel (626) 351-2082
Commission Contract Manager: Linda Davis (916) 654-3848
Status: Completed

Project Description:
The purpose of this project is to improve the reliability and capability of California's transmission and distribution system by developing a stronger and lighter conductor to replace these aging and overloaded power lines. Specifically, this project will develop a composite reinforced aluminum conductor (CRAC) to replace conventional conductors made from aluminum wires wrapped over a core of steel strands (called aluminum conductor - steel reinforced (ACSR) conductors). Many miles of California's overhead electricity transmission lines have reached the end of their service lives or are being stressed beyond their design limits due to load growth and heavy power transfers across longer distances. This technical development is very timely as the current age of transmission lines ranges from 30 – 70 years.

W. Brandt Goldsworthy and Associates, Inc. of Torrance, CA, with additional match-funding support from the DOE and private industry, is reconfiguring aluminum conductors around a lightweight composite strength member whose weight is approximately 25 percent of the traditional steel strength member. The resulting lightweight conductor can be optimized for reduced sag and increased ampacity. CRAC conductors can withstand adverse weather and high load conditions, thereby avoiding power outages caused by line sagging and swinging, high winds and ice buildup.

This project supports the PIER Program objectives of:

- Improving the reliability/quality of California's electricity by avoiding power outages caused by line sagging and swinging, high winds and ice buildup.
- Improving the energy cost/value of California's electricity by reducing losses and the costs of replacing conductors.
- Improving the environmental and public health costs/risks of California's electricity by reducing the need for new transmission lines.
- Improving the safety of California's electricity by significantly reducing the potential for line clearance violations.

Proposed Outcomes:

1. Design, fabricate and test a robust, practical and cost-effective composite reinforced aluminum conductor.
2. Target market price for CRAC is $1.00 per product pound, which is approximately the cost of aluminum conductors which are steel reinforced.
3. Five percent more electrical conductivity, compared to steel reinforced aluminum conductor.
4. Reduced mechanical elongation (line sag) at high operating temperatures.
5. 250 percent stronger than steel reinforced aluminum conductor.
6. 75 percent lighter than steel reinforced aluminum conductor.

Actual Outcomes:

1. Two CRAC, CRAC-121 (one-to-one) and CRAC-Advanced, were developed during this project. Both achieved:
   - Five percent more electrical conductivity than DRAKE.
   - A minimum of 40 percent more ampacity than DRAKE.
   - Twenty percent less mechanical elongation at ambient operating temperatures.
   - A 30 percent strength increase compared to DRAKE.
   - Only a 25 percent weight reduction was achieved and the objective of a 66 percent reduction was not met. In retrospect, this turned out to be an ill-posed objective because the maximum possible weight reduction, achieved by taking all the steel out of the DRAKE conductor, is only 33 percent.
2. Splicing techniques were developed and demonstrated for both CRAC.
3. A splicing tool was developed to splice the composite strength member.
4. There were two very positive unanticipated outcomes.
   - CRAC conductors were found to operate 9 (CRAC-121) to 25 percent (CRAC Advanced) cooler than ACSR conductors.
     - Both conductor designs can carry optical fibers in the hollow center. When optical fibers are added, these conductors are called CRAC-TelePower.

Project Status:

The project has been completed.

Distributed Generation (#733)

Contract #: 100-98-003 **Project #:** 2
Contractor: Gas Research Institute
Subcontractors: KN Services : Onsite Sycom Energy Corporation : AEC
Project Amount: $41,000
Contractor Project Manager: Ron Edelstein (847) 768-0889
Commission Contract Manager: Scott Tomashefsky (916) 654-4896
Status: Completed

Project Description:
The purpose of this project is to identify the application characteristics and technical requirements for the strategic utilization of gas-fired distributed generation beyond the electric distribution substation. The tasks undertaken in this program include 1) preparing an economic assessment of the market potential for installing distributed generation units, 2) developing modeling tools to identify options available to customers, and 3) developing integrated interconnection systems.

This project supports the PIER Program objectives of:

- Improving the reliability/quality of California's electricity by utilizing natural gas-fired distributed generation technologies.
- Improving the public health costs/risks of California's electricity by advancing the use of low-emission natural gas.

Proposed Outcomes:
During 2000, the following tasks will be completed:

1. Provide benefits, impacts, and issues information from four field test applications.
2. Provide two advanced controls and communications systems for distributed generation.
3. Provide reports on infrastructure and interconnection system requirements, as well as communication protocol needs.

Actual Outcomes:

1. Provide benefits, impacts, and issues information from four field test applications:
   - Beta version of D-Gen Pro (Version 3) made available for user testing.
2. Provide two advanced controls and communications systems for distributed generation:
   - Installed a 1.2 MW gas turbine genset with novel communication/control equipment has been installed at Texas Tech.
   - A retrofit of the existing reciprocating engine facility at Lovelace Medical Center, a 235-bed, full service hospital, located in Albuquerque, New Mexico was recently completed. A new communication/control system was installed to enable the hospital to benefit from instantaneous interruptible electric power rates.
3. Provide reports on infrastructure and interconnection system requirements and communications protocol needs.

Project Status:
The project has been completed.

Distributed Resources Demonstration

Contract #: 500-97-011 **Project #:** 4
Contractor: San Diego Gas and Electric Company
Project Amount: $450,000
Contractor Project Manager: Al Figueroa (619) 654-8614
Commission Contract Manager: Jamie Patterson (916) 657-4819
Status: Completed

Project Description:
The purpose of this project was to demonstrate technology that would reduce the cost of parallel interconnection to electric distribution grids from distributed generation systems while still maintaining mandated safety and system protection features.

Technologies under consideration included solid-state interconnection devices and advanced generation systems such as new dual-fuel (90 percent natural gas, 10 percent diesel) reciprocating engines, advanced gas turbines, and microturbines.

Objectives:

- Demonstrate a solid-state interconnection device with remote dispatching and control capabilities.
- Demonstrate an advanced dual-fuel generator (90 percent natural gas and 10 percent diesel).
- Demonstrate other advanced generation systems.

This project supports the PIER Program objective of:

- Improving the reliability/quality of California's electricity by improving the integrity, reliability and safety of California's energy supply system through diverse distributed electrical resources. In addition, this project addresses electrical distribution issues raised by deregulation of the California electricity industry.

Proposed Outcomes:

1. Solid-state interconnection device connected to an electric utility distribution grid was successfully implemented and demonstrated.
2. Dual-fuel systems can not obtain permits because of emission constraints.
3. Other advance generation technology was not available in time to meet project schedule.

Actual Outcomes:

1. Solid-state interconnection device can safely interconnect in parallel to electric grid.
2. Solid-state interconnection device is relatively the same size and has the same ease of operation with a wide range of generator sizes.
3. Solid-state technology shows promise for reducing cost of interconnection.
4. The dual-fuel generator originally proposed would not be cost effective as a distribution-generation option because of emission control costs in California.
5. Other advanced generation technologies (such as microturbines and advanced gas turbines) showed promised but were not ready in time to meet the schedule for this demonstration.

Recommendations

1. Demonstrate the solid-state interconnection device with automatic transfer switch and test under live power outage condition.
2. Look at alternative suppliers of solid-state interconnection devices to provide competition to reduce cost and improve quality of product and services.
3. Demonstrate the incorporation of advance generation systems with the solid-state device when such systems become available.

Project Status:

The project has been completed. The final report is posted on the PIER website and is titled Demonstration and Evaluation of Solid-State Interconnection System (Publication # 600-00-035).

Dynamic Circuit Thermal Line Rating (DCTR)

Contract #: 500-97-011 **Project #:** 5
Contractor: San Diego Gas and Electric Company
Project Amount: $110,000
Contractor Project Manager: William Torre (858) 654-8349
Commission Contract Manager: Linda Davis (916) 654-3848
Status: Completed

Project Description:
The purpose of this project was to develop and demonstrate real-time transmission line ratings. DCTR uses equipment mounted on a transmission tower to monitor the line conductor tension and determine ground clearances and weather conditions to calculate the amount of current that can be transmitted in real time. This information is provided to system operators or engineers for their use in safe, reliable and economic system operation. Conventional transmission lines ratings have been established as static rating, which may be lower than the maximum capability of the conductor. By monitoring wind speed, conductor tension and solar heating, a real time line rating may be calculated that is closer to the maximum conductor capability.

This project supports the PIER Program objectives of:

- Improving the reliability/quality of California's electricity since using real time dynamic line ratings ensures reliability and quality by making sure that ground clearances are not exceeded thus avoiding contact and flashovers which cause power outages and voltage surges.
- Improving the energy cost/value of California's electricity by improving transmission line utilization to facilitate economic transactions and reduce costs as real time ratings allow greater power transfers on existing facilities than the static line rating.
- Improving the environmental and public health costs/risks of California's electricity by improving utilization of existing transmission lines thereby avoiding the need for new lines and the associated environmental impacts.
- Improving the safety of California's electricity by using real time information to make certain that ground clearance limits are not exceeded thus avoiding the risk of electrical shock and fires.

Proposed Outcomes:

1. Increase transmission capacity on congested transmission lines to allow increased power transfers.
2. Reduce use of expensive generators which "must run" due to transmission rating constraints.
3. Promote the use of more economic generators to result in reduced energy system price for utility customers.

Actual Outcomes:

1. The dynamic real time rating for the demonstration was up to 150 percent more than the normal rating at some times. From 9 a.m. through 5 p.m., the dynamic rating averaged a 75 percent increase in rating over the normal rating on that circuit.
2. The real time rating also indicates that line ratings are sometimes reduced, and eliminates the risk of sagging the conductor to the point of contact thus preventing danger to the public.

Project Status:
The project has been completed.

Electric System Seismic Safety and Reliability

Contract #: 500-97-010 **Project #:** 9
Contractor: Pacific Gas and Electric Company
Subcontractors: University of California, Berkeley : Pacific Earthquake Engineering Research Center
Project Amount: $1,000,000
Contractor Project Manager: William Savage (415) 973-3116
Commission Contract Manager: Bob Anderson (916) 654-4206
Status: Completed

Project Description:
The purpose of this project is to support several major research projects in the field of electric system seismic safety and reliability. Projects ranged from the shake table testing of electric bushings and the collection of soil data at existing substations, to the development of a rapid response, strong ground shaking contour map program and related strong ground motion attenuation curves. Some of the early products have already been incorporated by a major California utility in their risk management practices. This contract was extended through January 31, 2000, due to the interruption of research report preparation by investigators assigned to assess damage in Turkey after the August 17, 1999, magnitude 7.4 Kocaeli earthquake.

This project supports the PIER Program objective of:

- Improving the reliability/quality of California's electricity by reducing the vulnerability of the electric transmission and distribution system due to damage caused by a major earthquake, continuation of power in an area affected by an earthquake and/or by the rapid recovery of the electric service. This rapid recovery will allow for a shortened interruption to emergency services and businesses due to the loss of electric power.

Proposed Outcomes:

1. Improvements to installed utility equipment will be identified and tested, and the potential for future disruptions due to earthquake-induced damage can be reduced.
2. Develop improved assessments of shaking-caused permanent ground deformation hazards in formats that the utility can directly use for evaluating electric system vulnerabilities.
3. Examine the process of fire initiation during power restoration following earthquakes to evaluate various means to reduce the risk of starting fires.
4. Develop the capability to analyze data from distant seismographic instruments to accurately predict the pattern and severity of strong earthquake shaking anywhere in the state.

Actual Outcomes:
Seven utility seismic topic areas were researched and the results are available in PIER Publication number 600-00-031F.

Project status:
The project has been completed.

Grid Operations and Management

Contract #: 100-98-001 **Project #:** 12
Contractor: Electric Power Research Institute (EPRI)
Subcontractors: EPRI Conference Blan : ABB Systems Control : Bailey Network Management : Bonneville Power Administration : Cegelec ESCA Corporation : Decision Systems International : Duquesne Light Company : General Physics Corporation : General Reliability : Houston Lighting & Power Company : Incremental Systems, Inc. : Iowa State University : Kansas City Power & Light Company : KEMA Consulting, KEMA-ECC, Inc. : Oracle Corporation : Pattern Recognition Technologies : Potomac Electric Power Company : Quality Training Systems : Siemens Energy and Automation, Inc. : Siemens/Empros : TU Electric Company : University of Liege : Utility Consulting International : V&R Company : Energy Systems Research : Warsaw University of Technology : Washington State University
Project Amount: $370,000
Match Amount: $9,691,100
Contractor Project Manager: Dan Sobajic (650) 855-8537
Commission Contract Manager: Don Kondoleon (916) 654-3918
Status: Completed

Project Description:
The purpose of this project is to support EPRI's collaborative program in Grid Operations and Management, which is developing new tools and information to ensure that the power grid will be a gateway to efficient competition and the key to customer satisfaction. EPRI provides tools and information that offer guidance on how to respond to demands to safely push more power through the system without jeopardizing system security. EPRI's products give system operators a clear view of real-time grid conditions, and allow them to make decisions that take into account maximum use of the grid as well as reliability of the system. Examples include vital resources to support operator training, real-time software for Energy Management System (EMS) control and operation, and seamless communication between Energy Management Systems and power plants.

This project supports the PIER Program objectives of:

- Improving the reliability/quality of California's electricity through innovative technologies, which help to balance the competing needs of maximizing the use of the grid while maintaining the security of the system.
- Improving the energy cost/value of California's electricity by merging new tools for grid functionality with information for operating in the new competitive marketplace. EPRI technology development programs will help to increase transmission capacity across constrained interfaces, thus reducing grid-operating costs, while enhancing system security.

Proposed Outcomes:

1. Provide software, methods, and information to enhance the transaction management capabilities of transmission system operations, and to allow increased transactions without impact on security.
2. Provide software, methods, and information to maximize energy transfers and increase energy flows across constrained interfaces.
3. Provide software, methods, and information to increase the transmission system capacity.
4. Conduct a Tailored Collaboration entitled "EPRI Early Warning System Project" to identify and report Y2K anomalies and events in electric and natural gas operations from 12/31/99 through 1/4/00.

Actual Outcomes:

1. Transaction management.
   - Version 1.4 of the transaction management software Open Access Same-time Information System (OASIS) software was developed. A response was prepared to FERC Order 638 to enhance the functionality and performance of OASIS business practices.
   - A variety of open-system, standardized tools were provided that will permit the CA-ISO to implement advanced security applications without regard for existing proprietary databases. Tools include Version 1.0 of the Application Program Interface (API), which enables users to integrate applications from various sources, and a Topology Processor, which allows applications developed for planning environments to be integrated into operating environments.
   - Two reports were published on the Common Information Model (CIM), which provides a common language for information.
   - New graphical user interfaces were developed for existing grid operations applications to ensure they have a consistent look-and-feel.
   - EPRI's Operator Training Simulator was integrated with API and CIM to allow operators to be trained with CIM data.
   - Five restoration lessons were produced for the Emergency System Management and Restoration (ESMR) product.
   - A tri-annual newsletter was published on new software programs and methods for improved transmission grid operation.
   - A report was published summarizing gird operations and planning issues, needs, technological advances, and regulatory changes in the 2000-2005 time frame.
2. Increase power flows.
   - Version 2.0 was released of EPRI's Transfer Capability Evaluation (TRACE) software, which allows system operators to determine the maximum number of simultaneous power transfers possible.
   - TRACE was integrated with IEEE PSADD Common format to support the latest version of Power Technologies' PSS/E data formats.
   - A TRACE training workshop was held.
3. Increase transmission capacity.
   - EPRI's Dynamic Security Assessment (DSA) software was made available. DSA allows operators to increase loading on constrained networks by calculating stability limits on-line in real time.
   - Two reports were published on DSA and Risk-Based Security Assessment.
   - Version 1.1 was released of EPRI's On-line Voltage Security Assessment (VSA) software, which allows system operators to increase power transfers across voltage-constrained networks by calculating voltage limits on-line in real-time.
4. A web site was established and operated to communicate information about the actual operating experience of selected locations during the year 2000 rollover.

Project Status:

The project has been completed.

Grid Planning & Development - Target 57/30

Contract #: 100-98-001 **Project #:** 13
Contractor: Electric Power Research Institute (EPRI)
Subcontractors: California Institute of Technology : Canadian Electricity Association : Carnegie Mellon University : Cornell University : ESEERCO : Harvard University : Honeywell, Inc. : Howard University : Iowa State University : Michigan Technological University : Mississippi State University : New Mexico State University : P Plus Corporation : Power Technologies, Inc. : PSERC : Purdue Research Foundation : Southern Company Services, Inc. : Texas Engineering Experiment Station : University of Washington
Project Amount: $360,000
Match Amount: $4,489,860
Contractor Project Manager: Dan Sobajic (650) 855-8537
Commission Contract Manager: Don Kondoleon (916) 654-3918
Status: Completed

Project Description:
The purpose of this project is to help grid planners have ample lead-time to prepare for the occasional bulk power transfer. Presently, they are responsible for facilitating hundreds of electricity sales and purchases each day. Bids must be processed in near real time and congestion issues must be resolved on the fly. Grid planning is becoming increasingly complex and labor intensive. This situation is directly at odds with dwindling work forces and loss of experienced personnel and the public demand for lower cost energy. To address this situation, EPRI is providing advanced analysis tools and enhanced communication systems. EPRI's Grid Planning and Development program provides a comprehensive portfolio of technology solutions for coping with the short-, mid-, and long-term planning and design demands of a changing industry. While the industry continues to change, the need to deliver reliable economical power will not. This target delivers planning aids and operator-training tools that improve grid utilization, reduce operating costs, and ensure system security.

This project supports the PIER Program objectives of:

- Improving the reliability/quality of California's electricity by developing advanced analysis tools and enhanced communication systems which will enhance grid planning in today's high transaction environment while maintaining system security.
- Improving the energy cost/value of California's electricity by improving grid utilization and reducing operating costs through the development and application of advanced tools and communications systems.

Proposed Outcome:

1. Provide software, methods, and information to increase the reliability of the California transmission grid.

Actual Outcome:

1. Software, methods, and information to increase grid reliability.
    - Information was provided that will assist the CA-ISO and California energy companies in designing rates and measuring ancillary services. Detailed information was provided on measuring three ancillary services—regulation, load following, and black start—and on certification testing for black start.
    - Versions 5.0 and 5.1 were released of EPRI's Transmission Reliability Evaluation for Large-Scale Systems (TRELSS) Program, which allows grid planners to simulate outages and study their effect on system reliability after taking suitable corrective action.
    - Version 1.2 was released of Composite Reliability Assessment by Monte Carlo (CREAM), which simulates the composite effects of generation and transmission outages.

- Two software programs were released, and two reports were published on, simulation of complex systems, including a report on prototype intelligent software agents for trading electricity.
- A methodology was produced for evaluating short-term risk in power system planning in the presence of load forecast and fuel price uncertainty.
- Tools were developed to evaluate the annual production cost of electricity as a function of uncertainty in generator availability.
- Version 5.2 was released of EPRI's Small Signal Stability Program (SSSP), which identifies the causes of power system instability and pinpoints the location of technologies to mitigate the problems.
- Version 5.2 was released of EPRI's Voltage Stability Program (VSTAB), which determines areas that are prone to voltage instability.
- Version 5.2 was released of EPRI's Dynamic Reduction Program (DYNRED), which reduces large power system models to lower-order models that retain the characteristics of the original models while significantly reducing the computer time required to perform studies.
- The Common Information Model (CIM) was extended to planning applications, enabling planners to base their studies on operating data and to more closely cooperate with CA-ISO operators.
- Version 5.2 was released of EPRI's Extended Transient Mid-term Stability Program (ETMSP), which allows CA-ISO to conduct mid-term simulations for nonlinear stability analysis of the power system.
- The Off-Line Transfer Capability Evaluation (TRACE) software program was released, and a training workshop was held. This program will allow CA-ISO to increase transmission service revenues by accurately determining the maximum available transfer capability.
- A tri-annual newsletter was published on new software programs and methods for improved transmission grid operation.
- A workshop was held for regional transmission organizations (RTOs) and independent system operators (ISOs), and proceedings of the workshop were published.

Project Status:
The Commission's participation in this target ended December 31, 2000.

Knowledge-Based Customer Metering

Contract #: 100-98-001 **Project #:** 19
Contractor: Electric Power Research Institute (EPRI)
Subcontractors: Advanced Systems Associates : Hypertek, Inc. : Plexus Research, Inc. : Arizona State University
Project Amount: $266,500
Match Amount: $1,165,930
Contractor Project Manager: Dave Richardson (650) 855-2331
Commission Contract Manager: Thomas Tanton (916) 654-4930
Status: Completed

Project Description:
The purpose of this project is to provide electricity consumers with intelligent, time-of-use electric meters with built-in communications to enable utilities and their customers to utilize innovative activities such as automatic meter reading and energy utilization analysis. An important part of industry restructuring is customization of service—providing new choices and new benefits to individual clients. Some customers may be attracted by new ways to lower their electricity bills, while others are already demanding premium power quality. Beyond the differentiation of electricity service, new opportunities are also arising for convergence of multiple utility services—including gas, telephone, home security, and Internet access—through a single provider. In each of these areas, more sophisticated customer interface technology will be needed to meet the data collection and communications requirements of the utility service revolution with customers and suppliers benefiting from detailed load and billing information.

New meter technology applications are being developed using the EPRI collaborative research approach to reduce development costs and risks. New products developed during these projects will be available to members for beta testing and at preferential pricing when the product has been commercialized. A prepayment meter is under development to give customers the flexibility of prepaying specific sums, just as telephone cards are now doing. A non-intrusive appliance load monitoring (NIALMS) module will be developed to provide a better understanding of residential energy usage leading to improved time of day pricing service. Tamper detection and research hold out the promise of reducing the number of billing irregularities. This EPRI target also develops market research into new metering service packages. Members will have an opportunity to participate in the research and select the target customers and demographics. Market data and analysis developed during these projects will be available to members for early adoption.

This project supports the PIER Program objectives of:
- Improving the quality of California's electricity by providing advanced meters with the intelligence, flexibility, and communication capability to allow automated meter reading, real-time pricing, and energy management services.
- Improving the energy cost/value of California's electricity by enabling the delivery of value-added electricity services to customers through advanced meters.

Proposed Outcomes:
1. Produce a commercial product—the SE-240 electronic residential meter—which is cost competitive with existing meters on an evaluated basis, while providing an array of additional services.
2. Develop information on residential customers' responses to new types of services made possible by advanced meters and communications systems.
3. Develop information on metering technologies and their applications to provide maximum choice and value to customers.

Actual Outcomes:
1. SE-240 electronic residential meter.

- Prototypes of the meter were field-tested by 47 utilities, and 19 vendors were engaged in the manufacture of plug-in modules. A technical progress report was published.
- A prototype meter was released with an internal disconnect switch to be used for remote disconnect to prevent lost revenue.

2. Information on customers' responses to new services.
   - A comprehensive review was published of available information on prepayment metering in North America, including business issues, customer acceptance, regulatory issues, and available products.
   - A report was published identifying new energy services being offered today in residential and commercial markets by electric utilities and energy service companies.
3. Information on metering technologies.
   - Up-to-date information on business issues and technology developments was compiled on the Metering Industry and Product Development web site.
   - Field audits were conducted and a report published on metering revenue losses due to theft, incorrect meter installation, and meter malfunction.
   - Support was provided to national standards setting organizations for open architecture for metering design. The minutes were published of the ANSI C12 Committee Meeting.

Project Status:
The Commission's participation in this target ended as of December 31, 1999.

Opportunities in Networked Home Communities

Contract #: 100-98-001 **Project #:** 14
Contractor: Electric Power Research Institute (EPRI)
Subcontractors: Paragon Consulting : EH Publishing : Levey Associates : Connect USA, Hoffman Publications : Macro Research : Web Wizard : Centermore Group, Collaborative.com : North-Atlantic Consulting : Phillips Petroleum Company : Sony : WebTV : Meternet
Project Amount: $487,000
Match Amount: $741,045
Contractor Project Manager: Craig McAllister (650) 855-1095
Commission Contract Manager: Thomas Tanton (916) 654-4930
Status: Completed

Project Description:
The purpose of this project is to help California ratepayers with telecommunication-based consumer electronics and Internet-based service opportunities related to energy usage, Internet billing, meter reading, appliance control, and energy information. California ratepayers need help to sort through the many choices, find current, accurate information and analyses and perspectives sensitive to energy issues - online, interactive and customized to their needs. This Target is designed to provide California ratepayers with these resources. This Target offers convenient and relevant technology surveillance services, coupled with interactive web-based access to specialists and experts inside and outside the utility industry.

Focus- and custom- EPRI analysis is provided in several key areas:

- Protocols and technical standards, converging technologies, and commercial activity in powerline, telephone, radio frequencies (RF) and cable media.
- Products and vendors of commercially available systems, including integration and management services.
- Projects, market assessments, and economic analysis.

EPRI supports implementation of practical solutions in several ways:

- Builder guidelines for new home networking (expanding on the growing service offering begun with HVAC and heat pump guidelines).
- Mobile and Internet connected networked home showcases.
- Energy Network Computer Information Network systems deployment projects.

This project supports the PIER Program objective of:

- Improving the energy cost/value of California's electricity by informing California energy users of new technologies and services to minimize use and cost of electricity and maximize value to the residential ratepayers.

Proposed Outcomes:

1. Provide market, technology, and business analyses to increase the potential of success of new products and services.
2. Provide Networked Home Centers test-bed facilities to increase likelihood of adoption in California.
3. Provide market, technology, and business analyses of Smart Appliances to bring benefits to California ratepayers.
4. Conduct a Tailored Collaboration entitled "Community Network Demonstration" to evaluate the response of an initial focus group of 100 households to low-cost, non-PC-based, consumer access to relevant energy and public benefit information and services.
5. Conduct a Tailored Collaboration entitled "Linked Infrastructure Security Initiative" to provide workshops and educational materials on designing, managing, and evaluating electronic infrastructure security programs for the energy industry.

Actual Outcomes:

1. Analyses of new products and services.
   - EPRI's Home Automation Technology Surveillance service reviewed more than 1500 news releases, conference and meeting presentations, interviews, and markets analyses.
   - Wrote more than 400 item summaries and collated and organized the summaries in three interest categories.
2. Networked Home Centers.
   - Draft floor plan and budget were developed for a Mobile Home Automation Demonstration Showcase. This mobile "home office" will demonstrate networking via the Internet, in-home utility controls, and multiple, switchable meters.
   - Reports were published on Project Res-IDENT and Community Networks.
3. Analyses of Smart Appliances.
   - Analyses of Smart Appliances were provided through one of the interest categories of EPRI's Home Automation Technology Surveillance service (described above).
   - A report was published on residential gateways and controllers.
4. Plans were developed for a pilot project—the Jefferson Project in Clairemont, California—scheduled to be launched in 2000.
5. Tailored Collaboration on Linked Infrastructure Security.
   - Five workshops were organized and facilitated, included two general program workshops and targeted workshops on development of security policy and procedures, operating systems, and legal issues.
   - Educational materials were published, including a security primer, DCS/PLC primer, SCADA/EMS primer, guidelines document, and an industry strategy paper.
   - A password secured, members-only web site was established for information sharing.

Project Status:

The Commission's participation in this target ended as of December 31, 1999. The Tailored Collaborations ended December 31, 2000.

Power Markets and Risk Management

Contract #: 100-98-001 **Project #:** 8
Contractor: Electric Power Research Institute (EPRI)
Subcontractors: The Brattle Group : L.R. Christensen and Associates : The Northbridge Group : Bechtel Group, Inc. : Energoprojekt Consulting SA : Laurits R Christensen Associates, Inc. : M.S. Gerber & Associates : Marketing Decision Research, Inc. : Pattern Recognition Technologies : Strategic Decisions Group
Project Amount: $733,151
Match Amount: $7,702,872
Contractor Project Manager: Art Altman (650) 855-8740
Commission Contract Manager: Richard Grix (916) 654-4859
Status: Completed

Project Description:
The purpose of this project is to provide a means of understanding risk in the California energy market. Managing risk is a key to competitive electricity prices in California, but traditional analyses cannot accurately reflect the value of resources or risks in today's market. EPRI provides a unique and powerful framework—anchored in modern finance theory—for making decisions with less risk, avoiding huge losses and providing a more stable electricity price environment. EPRI's Electricity Book and other EPRI products extend this tool, and focus on other critical issues, such as forward price curves and ancillary markets. Classes, workshops,
and interest groups help Commission staff use all of EPRI's risk management tools quickly
and effectively.

This project supports the PIER Program objective of:

- Improving the energy cost/value of California's electricity by reducing the risk associated with large electricity transactions and providing a more stable California electricity market.

Proposed Outcomes:

1. Provide a comprehensive analysis tool to model the California electricity market and the risks associated with the market.
2. Provide tools to value the benefits and risks of energy market transactions.
3. Provide better Forward Curve estimates to improve energy users' decision making.
4. Provide better understanding of ancillary services.
5. Conduct a Tailored Collaboration entitled "Market Pricing and Market Structure Analysis" to identify critical market pricing and market structure issues within California's new competitive electricity market that influence new market entry and have a direct impact on system reliability.
6. Conduct a Tailored Collaboration entitled "Using Dynamic Simulation to Understand Power Plant Construction Cycles" to modify and enhance an existing simulation tool, which will allow the CEC to model the permitting and construction process and thereby obtain new information on the economics and dynamics of cycles in the building of electric generating capacity.

Actual Outcomes:

1. Analysis tool to model the electricity market.
   - Version 1.10 was released of EPRI's Energy Book System (formerly called Electricity Book), an integrated software package that provides the capability for calculating the value of generating units, and for measuring the risks of transactions. Separate modules are included for pricing and tracking wholesale energy transactions, valuing generation assets, designing retail products, and determining risk exposures.
   - Training and user groups meetings were held.
   - A report was published on describing commodity prices in the Energy Book System.
2. Tools to value benefits/risks of market transactions.

- Version 1.10 was released of EPRI's Contract Evaluator software, which is designed to value and price wholesale energy transactions and to calculate exposures to wholesale energy markets.
- Version 1.20 was released of Contract Evaluator, with enhancements that improve the accuracy and speed of the modeling of price movements for risk management and derivative contract pricing.
- Version 1.10 was released of EPRI's Risk Manager software, which calculates overall portfolio risk based on exposures, market prices, and price volatilities.
- Version 1.20 was released of Risk Manager, with enhancements similar to Contract Evaluator described above.
- Two technical reports were published to assist planners in better measuring risks contained in assets and liabilities, and to understand and analyze the hedging strategies to lower those risks.
- Five workshops were held on "Value and Risk Management."
- A workshop was held on "Boom/Bust Cycles in the Power Industry: Power Generation Construction Cycles and Implications of Under- and Over-Building of Natural Gas-Fired Power Plants for Energy Markets and Plant Valuation." Presentations are compiled in a final report.
- An EPRI Pricing Conference was held.
- A newsletter was published on the latest EPRI software and tools for power markets and risk management.

3. Forward Curve estimates.
   - A sophisticated suite of tools, methods, and training was provided to assist planners in estimating forward curve price levels and volatilities in California power markets. Chief among these was a report entitled Forward Price Forecasting for Power Market Valuation.
   - Specific methods were provided for estimating process parameters—including natural gas prices and loads—which are key inputs to price forecasting.
   - Follow-up advancements were developed for the Forward Curve tools, including a calculation tool for identifying the marginal cost of power at nodes on the California grid, new algorithms for modeling load uncertainty scenarios, and a prototype model to facilitate application of the FastForward tool.
   - An assembled package was published entitled "Guide to Process Parameter Estimation Tool Kit," which includes a CD and a collection of four stochastic process parameter estimation spreadsheets.
   - More than half a dozen introductory and advanced training workshops and user group meetings were held.
4. Ancillary Services.
   - Measurement and certification tests were conducted at a host generator site. Findings provide insight into understanding methods for measurement and certification, as well as measured values of different ancillary services.
   - A report was produced on key concepts underlying price formation of ancillary services in deregulated markets.
   - A workshop was held on ancillary services pricing, market analysis, and operational issues.
   - Findings were published from a study entitled "The Gas-Electric Interface—A Regional Analysis," which characterized and interpreted announced capacity additions and determined the extent to which these additions are likely to lead to a net increase in gas consumption.
5. The tailored collaboration has not started, pending approval from the Commission.
6. The modeling tool was delivered and demonstrated to the CEC, and a written summary was presented.

Project Status:
The project has been completed.

Secondary Distribution Impacts of Residential EV Charging

Contract #: 500-98-059
Contractor: Georgia Technology Research Corporation
Contract Amount: $100,000
Contractor Project Manager: Frank Lambert (404) 675-1855
Commission Contract Manager: Mark Rawson (916) 654-4671
Status: Completed

Project Description:
The purpose of this contract is to cost share a collaborative project to analyze the power quality impacts of large single-phase residential loads, such as electric vehicle chargers, computer equipment, appliances, and HVAC to residential secondary distribution (customer-side) systems.

The market penetration of these large single-phase residential loads is a concern to distribution utilities, electric power providers and consumers alike. To the power providers, it is a potential power quality, power delivery, and energy consumption concern. For the distribution utilities and consumers, it is a concern in terms of distribution system reliability, house or site electrical system reliability, and energy costs. Impacts of consumer appliances on the utility secondary distribution system are network externalities. Electricity providers have no regulatory responsibility for network externalities. However, electricity providers do recognize the importance of this issue and are cost sharing this project. The collaborative includes Southern California Edison, Pacific Gas and Electric, Sacramento Municipal Utility District, Virginia Power, Southern Company, and Florida Light and Power.

This project supports the PIER Program objective of:

- Improving the reliability/quality and efficiency of California's electrical transmission, distribution and delivery grid by addressing power quality, power delivery, and energy consumption concerns.

Proposed Outcome:

- Analyze the power quality impacts of large single-phase residential loads, such as electric vehicle chargers, computer equipment, appliances, and HVAC to residential secondary distribution (customer-side) systems.

Actual Outcomes:
The main conclusions of the project based upon utility systems and chargers investigated were:

1. Commercial light-duty on-road EV chargers engineered to National Electric Vehicle Infrastructure Working Council (IWC) guidelines based upon IEC 1000-3-4 do not give rise to excessive voltage total harmonic distortion (THD) on the secondary side of the transformer. Two critical elements that make these guidelines effective are a minimum total power factor of 95 percent and a maximum current THD of equal to or less than 20 percent.
2. The main cause of concern is the overloading of the distribution transformer with widespread use of EV chargers, assuming the chargers meet voluntary IWC guidelines such that voltage THD is not an issue. Still, utility service planning groups should ask for kVa and true power factor values in addition to the kW values for any rectifier or other non-linear load.

Project Status:
Interim results of this project have been presented and published at the North American Electric Vehicle Infrastructure conference in November 1999. A final report was presented at the Electric Vehicle Symposium in October 2000. Project results have also been provided to the IEEE Task Force on Single Phase Harmonics and a summary provided to EPRI for release to the IWC.

Substation Reliability

Contract #: 500-97-012 **Project #:** 15
Contractor: Edison Technology Solutions/Southern California Edison
Project Amount: $215,000
Contractor Project Manager: Moham Kondragunta (626) 815-0507
Commission Contract Manager: Linda Davis (916) 654-3848
Status: Completed

Project Description:
The purpose of this project was to develop an intelligent alarm analysis and diagnostics system, the Alarm Analyzer. The system simplifies thousands of pieces of information and alarms during an emergency condition, such as a regional system breakup due to a fault. In a matter of seconds, the operator is presented with only the relevant and highest priority information on system status and a recommended course of action. This compares to hours or days to do the same manually.

Voice data and command entry is established in control room consoles. During system disturbances, switching and other load and grid operations must be executed quickly and accurately. Speech recognition tools being adapted and evaluated through this project will free the operator from the keyboard to permit data entry and commands by voice. This project improves substation system efficiency, reliability and capacity and reduces operation and maintenance costs. This project helps electrical system operators to provide a much quicker response time during transmission system breakup and disturbance.

The Alarm Analyzer improves the accuracy of control room operator decisions by assisting in quickly identifying the type of fault and accurately identifying its location. This information is essential in reducing the amount of outage time and costs to the users and the utilities. Crews can be dispatched with the correct materials for repairs to the precise trouble location and system reconfiguration can be implemented immediately to restore service through alternate routes.

This project supports the PIER Program objectives of:

- Improving the reliability/quality of California's electricity by reducing restoration and fault analysis time from hours or days to minutes.
- Improving the energy cost/value of California's electricity by reducing operations and maintenance costs.
- Improving the environmental and public health costs/risks of California's electricity by reducing the risk of operation mistakes during power disturbances.

Proposed Outcomes:

1. Complete the initial stage of development of an intelligent alarm analysis and diagnostics system to automatically classify and filter the thousands of pieces of information and alarms generated during an abnormal event on the grid, such as a regional blackout caused by a fault.
2. Investigate the feasibility of the Alarm Analyzer tool.
3. Implement voice recognition technology and evaluate its benefits in the entry of data and commands into a computer or other device in control rooms and other applications.

Actual Outcomes:

1. Southern California Edison (SCE) completed its objectives by developing the Alarm Analyzer tool, implementing voice recognition technology, and conducting successful demonstrations of each.
2. Use of the Alarm Analyzer tool reduced the time required to produce an accurate diagnostic of an event from several hours or days to less than two minutes. These results are based on simulations of actual events occurring at the Dalton Substation.
3. The voice recognition tools evaluated in this project resulted in a productivity increase of at least 200 percent in entering information into a computer file, with an accuracy rate greater than 97

percent. These results are based on a comparison between keyboard entry methods and voice input.

4. Operations and maintenance costs are reduced by improving productivity through data entry and control of computers via voice. Dictating directly to the computer was found to improve productivity by at least 200 percent and greatly simplified multi-tasking for control room operators, line patrols, and office personnel.

Project Status:
The project has been completed.

Systems Stability and Reliability

Contract #: 500-97-011 **Project #:** 6
Contractor: San Diego Gas and Electric Company
Project Amount: $100,000
Contractor Project Manager: Ali Yari (619) 696-2755
Commission Contract Manager: Linda Davis (916) 654-3848
Status: Completed

Project Description:
This project investigated the feasibility and benefits of implementing Flexible AC Transmission System (FACTS) devices on Extra High Voltage (EHV) electricity transmission lines to increase power transfer capability and electricity import capability. The use of Static Condensers (STATCON), Thyristor Controlled Series Capacitors (TCSC) and Static Var Controllers (SVC) were examined in this previous study.

To meet the forecasted future electrical load in California, either additional generation must be installed or import capability must be increased. FACTS technologies help improve power transfer, power quality and system control. FACTS technologies use high-speed, thyristor-controlled devices and advanced control concepts to allow loading lines to their thermal limits without compromising system reliability. This study conducted detailed technical and economic studies to investigate the benefits of FACTS technologies for the SDG&E service territory.

This project supports the PIER Program objectives of:

- Improving the reliability/quality of California's electricity by allowing operators to load lines to their thermal limits without compromising system reliability.
- Improving the energy cost/value of California's electricity by improving the efficiency of the power transfer capacity of the electricity transmission system.
- Improving the environmental and public health costs/risks of California's electricity by improving the power carrying capability of the existing system thereby reducing the need for new transmission lines.

Proposed Outcome:

1. Conduct detailed technical and economical studies to investigate the benefits of Flexible AC Transmission Systems (FACTS) devices located in SDG&E's service territory. The study focus was on the potential benefits of existing and new FACTS devices in improving SDG&E's import capability.

Actual Outcomes:

1. Preliminary studies show that facility overload and reactive power deficiency are the main problems associated with increasing SDG&E's import capability.
2. FACTS technology can be used to mitigate both problems and could possibly increase SDG&E's simultaneous import capability by 300 MW by relieving line overloads and providing dynamic reactive power support.
3. FACTS also could possibly increase non-simultaneous import capability by 250 MW by relieving line overloads and providing dynamic reactive power support.
4. The system transfer capability increases can also be achieved through rearrangement of transmission circuits at lower cost than the FACTS technology.

Project Status:
The project has been completed.

Targets: 64.0/24 Distributed Resources (DR) Information and Tools for Business Strategy Development; 64.3 Distribution Planning Tools for Distributed Resources and 64.4 DR as a Risk Management Hedge in Retail Portfolios

Contract #: 100-98-001 **Project #:** 10
Contractor: Electric Power Research Institute (EPRI)
Subcontractors: Christensen & Associates, Inc. : Daniel Mann Johnson Mendenhall : Edison Technology Solutions/Southern California Edison : Electrical Distribution Design, Inc. : Energy Signature Associates, Inc. : Erin Engineering and Research, Inc. : Hagler Bailly Consulting, Inc. : Materials and Systems Research, Inc. : National Rural Electric Cooperative Association : NEOS Corporation : Ontario Power Technologies : Proton Energy Systems, Inc. : Raytheon Engineers & Constructors, Inc. : Resource Dynamics Corporation : Utility Consulting International.
Project Amount: $596,250
Match Amount: $7,065,337
Contractor Project Manager: Dan Rastler (650) 855-2521
Commission Contract Manager: Jairam Gopal (916) 654-4880
Status: Completed

Project Description:
The purpose of this project is to provide the Commission with information and tools to enable California ratepayers and energy providers to realize the full potential of DR-based business strategies. EPRI involvement in DR research provides the unique access and intelligence necessary to identify new markets niches, improve the use of generation and T&D assets, and evaluate DR-based solutions for commercial and industrial ratepayers and business opportunities for energy providers. The target focuses on creating integrated, dependable, packaged solutions and providing information to better understand the DR market, both locally and globally. This EPRI target provides information to support the planning and deployment of DR projects, analyze DR for retail business applications, understand the impacts of DR on utility distribution systems, and evaluate the integration, management, and control of DR technologies.

This project supports the PIER Program objectives of:

- Improving the reliability/quality of California's electricity by developing generation options that energy providers can utilize to provide unique solutions for peaking power issues, to enhance system reliability (system voltage control), and to assure power quality to their customers.
- Improving the energy cost/value of California's electricity by assisting in the development of innovative distributed resource technologies that can potentially provide lower delivered cost electricity than central station power.
- Improving the environmental and public health costs/risks of California's electricity by assisting in developing fuel cell systems and other environmentally preferred generation technologies to replace traditional central station power.

Proposed Outcomes:

1. Provide strategic information on the DR business environment, trends, technologies, customers, and markets.
2. Compile detailed information to allow analysis of DR for retail business applications.
3. Provide information to assist distribution planners in integrating DR in utility electric distribution systems.
4. Supply information, methodology, and tools to support analysis of DR impacts on electric distribution systems.
5. Conduct market research and provide information on DR markets.
6. Conduct a Tailored Collaboration entitled "Tests and Evaluation of Four Newly Commercialized Distributed Generators in San Diego, CA."
7. Conduct a Tailored Collaboration entitled "Distributed Energy Resources Public Web."

Actual Outcomes:

1. Strategic Information.
   - A quarterly newsletter—*Strategic Intelligence Update: DR Business Developments*—was published on DR applications, business developments, partnerships, demonstrations, regulatory policy, and electrical interconnection and integration research.
   - An online version of *EPRI Distributed Resources Technical Assessment Guide (DR-TAG)* was made available. The web-based Guide includes information on product configurations, technology status, development issues, and prospects for future improvements.
   - Educational tech briefs were published on key DR topics.
   - The 2nd Annual Business Venture Forum, an annual national workshop, was held July 25-26 in San Francisco. It provided a forum for utilities, energy companies, equipment manufacturers, and vendors to discuss the latest technology, market, and policy developments.
   - Advisory Group Meetings were held in February, July, and October.
2. Retail Business Strategies.
   - A report—*Managing Price Risk with Distributed Resources* (1003972)—was published on the potential value of DR as a hedging device for end-use customers.
   - A report—*Framework for Evaluating DR Business Cases* (1003971)—was published on a decision-making framework for analyzing DR-based business opportunities in the context of a retail portfolio, or as a business unit targeting a defined set of customers with identified needs.
3. Integration of DR in Distribution Systems.
   - A report—*Technical Assessment and Evaluation of DR Micro-Grids* (1003973)—was published on the technical and economic feasibility of designing and operating micro-grids.
   - A software tool—*Distributed Resources Integration Assistant: Version 1.0* (1006540)—was developed to provide useful engineering information, calculators, and screening tools to assist those involved with properly integrating DR into the electric power system.
4. DR Impacts on Distribution Systems.
   - A report—*DR Cost Impacts on Transmission and Distribution Systems* (1003975)—was published to assess the economic pros and cons of employing DR technologies when T&D system upgrades are needed.
   - A report—*Siting of DR Units: Process and Issues* (1003974)—was published on the issues and principles involved in the DR siting process and outlines how most tasks can be conducted.
5. Market Research.
   - A report—*Market Research in Residential DR Technologies* (1003976)—was published on results of primary research into issues facing DR in residential markets with a special emphasis on California markets as leaders in accommodating their behaviors to volatile energy markets.
   - A report—*DR Adoption Experience in the Commercial Sector* (1003977)—was published on commercial businesses' experience in using DR technologies and the extent to which these technologies met the economic and operations experience of these early adopters.
6. Tailored Collaboration—Evaluation of Five Distributed Generators.
   - A demonstration project was conducted, siting new DER products at end-user facilities with the purpose of collecting end-user experiences and better understanding the steps required to site DER devices. A full complement of performance, emission, power quality, and noise tests were also conducted.
7. Tailored Collaboration—DER Public Web.
   - A website containing nearly all the information generated by the EPRI DR targets in the last three years was made available in a well-organized, easy-to-use structure.

Project Status:
The Commission's participation in this target ended December 31, 2000. The tailored collaboratives have been completed.
.

USAT MOD-2

Contract #: 500-97-012 **Project #:** 13
Contractor: Edison Technology Solutions/Southern California Edison
Project Amount: $1,000,000
Contractor Project Manager: Bob Yinger (626) 815-0507
Commission Contract Manager: Linda Davis (916) 654-3848
Status: Completed

Project Description:
The purpose of this project was to promote development of the USAT satellite communications system to deliver high-reliability communications for utility supervisory control and data acquisition (SCADA) systems under all types of weather conditions. SCADA systems allow a utility to monitor and control its transmission and distribution system to insure high reliability. Traditionally, communications was accomplished by leased or private telephone lines, microwave, fiber optic cable or radio. The use of satellite communications needs to be very cost effective in remote areas and capable of collecting high speed SCADA data from any location in California no matter how remote. This data would not be available if conventional communications technologies were used.

This SCADA data is valuable in insuring that the highest reliability is maintained for the California transmission and distribution systems by enabling real-time monitoring of system loading and quick execution of control commands during normal and emergency conditions. Because of the system's high reliability and "communications anywhere" capability, it is invaluable during major fires, storms and earthquake emergencies. Communications during these emergencies is valuable in locating problems, assessing damage and returning equipment to service quickly. The ULTRA-NET™ remote terminals are easily installed and can be in service within a few hours to help reduce restoration time after a catastrophic event.

This project supports the PIER Program objectives of:

- Improving the reliability/quality of California's electricity by providing accurate electric grid monitoring information on power supply disruptions.
- Improving the energy cost/value of California's electricity by reducing maintenance costs and restoration time.
- Improving the environmental and public health costs/risks of California's electricity by eliminating the need for service vehicles to visit remote sites on a regular basis. [This will result in a reduction of over 3 million vehicle miles (250 to 500k miles per year) resulting in fuel conservation and a corresponding reduction in environmental pollution].
- Improving the safety of California's electricity by allowing communications to be restored quickly when the infrastructure for other systems has been damaged or during catastrophic events.

Proposed Outcomes:

1. Deliver high-reliability data between SCADA systems of electrical transmission and distribution systems under all types of weather conditions using satellite communications that are cost effective in remote areas.
2. Develop a satellite communications system capable of collecting high speed SCADA data from any location in California no matter how remote to make data available beyond that of conventional communications technologies and enabling real-time monitoring.

Actual Outcomes:

1. The system operated successfully, but more field operation is required before it can be considered a commercial product.
2. To increase the commercial potential of the system, the cost of the remote terminals needs to be reduced since many remotes and only one hub is required in a complete system.
3. Restoration time for communication to remote areas can be greatly improved since conventional restoration can take days, while the restoration of communications with USAT is accomplishable within hours.

Project Status:

The project has been completed.

Energy Innovations Small Grants Program (EISG)
Multi-Year Projects Started in 2005

Advanced Cathode Materials for Solid Oxide Electrolyzers

The Problem	Solid oxide electrolyzers are reversible fuel cells that use hydrogen to make electricity in the fuel cell and in reverse use electricity to make hydrogen. In principle, they can be excellent energy storage devices for intermittent renewable electric generators. However, their performance needs improvement in order to become economic as energy storage devices.
Proposed Research	The purpose of this project is to determine the feasibility of improving the reversible performance of solid oxide electrolyzers cells (SOECs) using new materials as cathodes to effectively utilize off-peak generation of electricity to produce hydrogen from renewable energy resources. Such materials will have improved performance over existing cathode materials.
Research Justification and Goals	Adds a project to the Commissions research portfolio that has the potential to enhance the reliability, peaking power, and storage capabilities of renewable energy as mandated by the Warren-Alquist Act by: • Synthesizing new cathode materials to demonstrate appropriate particle size distribution. • Fabricating cells. • Demonstrating a 40% improvement in new cathode materials.
Contractor	Boston University
PIER Manager	Alec F. Jenkins

This project is being conducted by the California Energy Commission's Public Interest Energy Research (PIER) program. PIER supports energy research and development that improves the quality of life in California by bringing environmentally safe, affordable, and reliable energy services and products to the marketplace.

Alternative Synthetic Fuels Injector Tests

The Problem	Under a previous grant, Clean Energy Systems (CES) successfully demonstrated an unusual hot gas generator using natural gas and oxygen that produces energy with pure CO2 as the only emission. The hot gas directly drives a steam turbine at high temperatures and efficiency for power generation. The pure CO2 is suitable for sale to the compressed CO2 markets, pressurizing oil deposits, and for direct sequestration. In this grant project, CES is developing a gas injector to combust alternative fuels, such as are available from biomass and animal waste, for clean and efficient electric generation.
Proposed Research	The purpose of this project is to determine the feasibility of fabricating a specifically designed injector that will be used to test alternative renewable fuels, including simulated gases from biomass, anaerobic digesters and landfills.
Research Justification and Goals	Adds a project to the Commissions research portfolio that addresses key technical and scientific barriers as mandated by the Warren-Alquist Act by: • Manufacturing multiple fuel injectors. • Testing the injector performance on alternative fuels. • Monitoring combustion performance and gas composition. • Reporting injector performance vs. fuel and resultant drive gas.
Contractor	Clean Energy Systems, Inc.
PIER Manager	Alec F. Jenkins

This project is being conducted by the California Energy Commission's Public Interest Energy Research (PIER) program. PIER supports energy research and development that improves the quality of life in California by bringing environmentally safe, affordable, and reliable energy services and products to the marketplace.

Atmospheric Plasma Deposition of N-type Zinc Oxide for Thin Film Photovoltaics

The Problem	Thin film solar cells are an important technology for lowering the cost of solar energy and meeting California's renewable portfolio standards. Fabrication of the thin film currently requires that the deposition process take place in expensive vacuum chambers.
Proposed Research	The purpose of this project is to determine the feasibility of demonstrating a new, less expensive process for depositing thin-film photovoltaic solar cells at atmospheric pressure thus dispensing with the need for expensive vacuum chambers.
Research Justification and Goals	Adds a project to the Commissions research portfolio that has the potential to enhance the reliability, peaking power, and storage capabilities of renewable energy as mandated by the Warren-Alquist Act by: • Demonstrating that the test setup will measure power level, oxygen flow rate, diethylzinc flow rate and temperature to within an error of +/- 5%. • Demonstrating that the proposed plasma deposition process is capable of producing a zinc oxide film at specified growth rates. • Determining the effect of the process conditions on the dopant incorporation and material properties. • Characterizing the materials to determine the deposition rate, crystallinity, transmittance, reflectance, resistivity, carrier concentrations, dopant and impurity concentrations and electron mobility.
Contractor	University of California, Los Angeles
PIER Manager	Alec F. Jenkins

This project is being conducted by the California Energy Commission's Public Interest Energy Research (PIER) program. PIER supports energy research and development that improves the quality of life in California by bringing environmentally safe, affordable, and reliable energy services and products to the marketplace.

Ceramic Electrolyte Production on Pre-Formed ITSOFC Substrates

The Problem	California can benefit from electricity generated from clean fuel cell technologies. Current fuel cell technologies have not performed adequately at a cost needed for wide spread adoption for commercial applications. Fuel cell technologies with adequate reliability at a competitive cost will help meet California's energy policy objectives.
Proposed Research	The purpose of this project is to determine the feasibility of producing dense ceramic electrolyte films to form essential components of low-cost solid oxide fuel cell stacks that could offer 10-25% higher efficiency than conventional technologies.
Research Justification and Goals	Adds a project to the Commissions research portfolio that has the potential to enhance the reliability, peaking power, and storage capabilities of renewable energy as mandated by the Warren-Alquist Act by: • Synthesizing and evaluating bulk CGO pellets sintered at temperatures between 850 and 1100 degrees Celsius. • Demonstrating sufficient densification. • Obtaining thermal expansion coefficients of +/- 10% . • Obtaining electrolyte films that are free of cracks and interconnected pores. • Demonstrating power densities greater than 350mW/cm2 between 600 and 650 degrees Celsius.
Contractor	University of California, Berkeley
PIER Manager	Alec F. Jenkins

This project is being conducted by the California Energy Commission's Public Interest Energy Research (PIER) program. PIER supports energy research and development that improves the quality of life in California by bringing environmentally safe, affordable, and reliable energy services and products to the marketplace.

Concentrating Triple-Junction PV Systems for Distributed Power Generation

The Problem	The cost of solar power, while declining, continues to put off homeowners who might otherwise be interested if the costs were lower. The price of high efficiency triple junction photovoltaic (PV) cells developed for space applications has dropped to the point where they now may be economically feasible for use in land based solar energy applications. Additionally, non-imaging solar concentrating systems, which do not require expensive sun tracking equipment required by imaging solar concentrating systems, may offer a low cost approach for concentrating sunlight onto these triple junction cells.
Proposed Research	The purpose of this project is to determine the feasibility of designing a photovoltaic system for distributed generation using non-imaging solar concentration systems to concentrate sunlight onto high efficiency triple junction solar cells.
Research Justification and Goals	Adds a project to the Commissions research portfolio that has the potential to enhance the reliability, peaking power, and storage capabilities of renewable energy as mandated by the Warren-Alquist Act by: • Refining and finalizing optical and thermal design. • Demonstrating proposed capacity using prototype. • Upgrading testing facility. • Formulating test plan. • Conducting outdoor prototype testing. • Evaluating stability of PV system. Performance should not deteriorate by more than 25% over 20 years. • Investigating cost-reduction options. • Identifying low-cost manufacturing processes and manufacturers.
Contractor	University of California, Merced
PIER Manager	Alec F. Jenkins

This project is being conducted by the California Energy Commission's Public Interest Energy Research (PIER) program. PIER supports energy research and development that improves the quality of life in California by bringing environmentally safe, affordable, and reliable energy services and products to the marketplace.

Development of a Wireless Lighting Control Network

The Problem	Lighting energy accounts for nearly 50% of commercial building electricity consumption. Commercial building lighting accounts for 11% of California peak electrical demand.
Proposed Research	The purpose of this project is to demonstrate a wireless lighting control system based on miniature, low-power radio network technology.
Research Justification and Goals	Adds a project to the Commissions research portfolio that emphasizes innovative energy supply and end use technologies, focusing on their reliability, affordability, and environmental attributes as mandated by the Warren-Alquist Act by: • Demonstrating the ability of a wireless network to control lighting in a building. • Developing control software. • Demonstrating that the device can measure energy consumption with better than 4% accuracy. • Demonstrating that system life of 10 years without maintenance continues to be supported. • Demonstrating that the projected installed cost of $15-20 per fixture is achievable.
Contractor	University of California, Berkeley
PIER Manager	Alec F. Jenkins

This project is being conducted by the California Energy Commission's Public Interest Energy Research (PIER) program. PIER supports energy research and development that improves the quality of life in California by bringing environmentally safe, affordable, and reliable energy services and products to the marketplace.

Development of Optimization Software for an Activated Sludge System

The Problem	Energy consumption could be reduced significantly at California wastewater plants by the development of an activated sludge process that does not jeopardize treatment efficiency.
Proposed Research	The purpose of this project is to determine the feasibility of using a new methodology for online selection of activated sludge process parameters that guarantees required treatment efficiency and minimum energy consumption.
Research Justification and Goals	Adds a project to the Commissions research portfolio that emphasizes innovative energy supply and end use technologies, focusing on their reliability, affordability, and environmental attributes as mandated by the Warren-Alquist Act by: • Developing a methodology for determining the optimum sludge age. • Developing a methodology for determining minimum dissolved oxygen concentration. • Developing a methodology for determining optimum combination of solids retention time and dissolved oxygen. • Developing a prototype software. • Demonstrating that prototype software can provide 5% energy savings under similar input conditions and comply with effluent quality requirements
Contractor	Ekster & Associates
PIER Manager	Alec F. Jenkins

This project is being conducted by the California Energy Commission's Public Interest Energy Research (PIER) program. PIER supports energy research and development that improves the quality of life in California by bringing environmentally safe, affordable, and reliable energy services and products to the marketplace.

Direct Ethanol Solid Acid Fuel Cells

The Problem	California is in need of an inexpensive, highly efficient fuel cell technology that can replace current residential power generators.
Proposed Research	The purpose of this project is to determine the feasibility of a natural gas powered fuel cell using a membrane electrode assembly which is capable of generating significant amounts of energy at peak power.
Research Justification and Goals	Adds a project to the Commissions research portfolio that has the potential to enhance the reliability, peaking power, and storage capabilities of renewable energy as mandated by the Warren-Alquist Act by: • Devising a method for producing ultra thin electrolyte membranes of 20 or less microns. • Increasing power density significantly over current technologies. • Demonstrating a stable long-life of more than 1000 hours.
Contractor	Proton Power, Inc.
PIER Manager	Alec F. Jenkins

This project is being conducted by the California Energy Commission's Public Interest Energy Research (PIER) program. PIER supports energy research and development that improves the quality of life in California by bringing environmentally safe, affordable, and reliable energy services and products to the marketplace.

Evaluation of Molybdenum Removal from Power Plant Waste Streams Using Innovative Nanoparticle Media

The Problem	A number of areas in California have water streams that contain levels of molybdenum from power plants waste water that can cause adverse reactions in livestock. Molybdenum is used in chemical corrosion inhibitors for power plant systems.
Proposed Research	The purpose of this project is to evaluate the feasibility of using iron based adsorbents to remove molybdenum from simulated power plant waste streams to achieve molybdenum levels more stringent than current RWQCB (Regional Water Quality Control Board) basin plan water quality goals.
Research Justification and Goals	Adds a project to the Commissions research portfolio that addresses key technical and scientific barriers as mandated by the Warren-Alquist Act by: • Developing nano-particle media with two different configurations for optimum removal of molybdenum. • Performing kinetic study in water spiked with molybdenum. • Performing batch equilibrium testing. • Performing cost estimates. • Evaluating steps in media certification and financing. • Evaluating commercialization potential.
Contractor	Kennedy/Jenks Consultants, Inc.
PIER Manager	Alec F. Jenkins

This project is being conducted by the California Energy Commission's Public Interest Energy Research (PIER) program. PIER supports energy research and development that improves the quality of life in California by bringing environmentally safe, affordable, and reliable energy services and products to the marketplace.

High-Efficiency Air-Conditioner on Single-Phase Electricity

The Problem	Three-phase motors are more efficient, reliable, and cost effective than single phase motors used in light commercial air conditioners. The feasibility of a low-cost circuit design needs to be determined that would allow these more efficient motors to operate off of the single phase power supplies available to residential and light commercial electricity customers in California.
Proposed Research	The purpose of this project is to determine the feasibility of low-cost circuit designs that allow air conditioners with 3 phase motors to operate from single-phase electrical supplies to improve with reduced electricity costs for both public utility and residential customers.
Research Justification and Goals	Adds a project to the Commissions research portfolio that addresses key technical and scientific barriers as mandated by the Warren-Alquist Act by: • Proving that the increased efficiency as a result of using the three phase motor is sufficient to justify the new costs of manufacturing. • Justifying that the cost of the system is substantially less than the old system. • Proving that the increased efficiency using the 3 phase motor is sufficient for regulatory agencies to promote or require higher efficiencies.
Contractor	Smith & Sun
PIER Manager	Alec F. Jenkins

This project is being conducted by the California Energy Commission's Public Interest Energy Research (PIER) program. PIER supports energy research and development that improves the quality of life in California by bringing environmentally safe, affordable, and reliable energy services and products to the marketplace.

Hydrogen Micro-Sensor for Real Time Diagnostic of Transformer Oil

The Problem	The feasibility needs to be determined of developing an innovative, low cost, highly sensitive and selective micro-sensor to monitor low levels of hydrogen generated from oil degradation in transformers and oil-filled electrical equipments. Oil degradation leads to insulation breakdown and eventually to explosion and fire.
Proposed Research	The purpose of this project is to determine the feasibility of developing an innovative, low cost, highly sensitive and selective micro-sensor to monitor low levels of hydrogen generated from oil degradation in transformers and oil-filled electrical equipments.
Research Justification and Goals	Adds a project to the Commissions research portfolio that addresses key technical and scientific barriers as mandated by the Warren-Alquist Act by: • Designing micro-sensor and control electronic circuit. • Fabricating the micro-sensor. • Designing the test and calibration chamber. • Demonstrating that the micro-sensor electrical power consumption is less than 100 megawatts. • Characterizing the micro-sensor in the test and calibration chamber. • Analyzing the collected test data. • Confirming that the micro-sensor accuracy is +/- 5% of hydrogen concentration.
Contractor	Kebaili Corporation
PIER Manager	Alec F. Jenkins

This project is being conducted by the California Energy Commission's Public Interest Energy Research (PIER) program. PIER supports energy research and development that improves the quality of life in California by bringing environmentally safe, affordable, and reliable energy services and products to the marketplace.

Improved Wind Turbine Blade Design with Advanced Composite Materials and Processes

The Problem	The current technology of fabricating the blades of large wind turbines borrows heavily from the fiber-glass technology of manufacturing boat hulls. A likely lower cost, lighter weight, and stronger blade approach is to adapt the materials and fabrication techniques developed for the modern manufacture of commercial aircraft wings. There is the added advantage of moving the now over-seas fabrication of wind turbine blades (where labor costs are cheap) back to the US. Lighter, stronger, and therefore longer blades are key to increasing the longevity and power output of current large turbines, while expanding their range to areas with lower than average wind speeds.
Proposed Research	The purpose of this project is to determine the feasibility of utilizing TYCOR, an engineered core material for composite sandwich panels, and relating manufacturing processes for producing longer, higher efficiency, less expensive wind turbine blades for lower wind sites.
Research Justification and Goals	Adds a project to the Commissions research portfolio that addresses key technical and scientific barriers as mandated by the Warren-Alquist Act by: • Demonstrating that TYCOR enables improved blade performance. • Fabricating test panels and subcomponents. • Evaluating the performance of the panels. • Demonstrating significant blade weight reduction enabled by TYCOR materials. • Demonstrating a significant cost reduction as a result of using TYCOR materials and manufacturing processes.
Contractor	Webcore Technologies, Inc.
PIER Manager	Alec F. Jenkins

This project is being conducted by the California Energy Commission's Public Interest Energy Research (PIER) program. PIER supports energy research and development that improves the quality of life in California by bringing environmentally safe, affordable, and reliable energy services and products to the marketplace.

Ion Sense Based Air-Fuel Ratio Control in Stationary IC Engines

The Problem	The ion-sensing of the optimum moment for ignition in large stationary internal combustion (IC) engines has the potential to enable such engines to run cleaner with greater fuel efficiency than now possible. Large IC engines are used to compress natural gas for distribution and for power generation. The technology is expected to lower the cost of environmental compliance for the user.
Proposed Research	The purpose of this project is to determine the feasibility of developing a cost effective ion sense based air-fuel ratio control technology using a modified spark plug for power generation.
Research Justification and Goals	Adds a project to the Commissions research portfolio that addresses key technical and scientific barriers as mandated by the Warren-Alquist Act by: • Obtaining owner/operator approvals. • Defining ignition system modifications and fabrication of Ion Sense hardware. • Demonstrating the correlation between ion sense and air fuel ratio control technology. • Performing a lifecyle cost analysis.
Contractor	Advanced Engine Technologies Corporation
PIER Manager	Alec F. Jenkins

This project is being conducted by the California Energy Commission's Public Interest Energy Research (PIER) program. PIER supports energy research and development that improves the quality of life in California by bringing environmentally safe, affordable, and reliable energy services and products to the marketplace.

Low-level Concentrating Photovoltaic System

The Problem	Solar photovoltaics have the potential to become a competitive choice in the market. It can be made more affordable through the development of low-cost concentrators that focus the solar energy on the PV cell using efficient design and lower cost materials.
Proposed Research	The purpose of this project is to determine the feasibility of a low level concentrating photovoltaic system using specially designed materials to significantly reduce the cost per kilowatt hour of solar energy generated. By developing a low cost solar concentrator-PV assembly, the project aims to reduce the installed cost of solar power.
Research Justification and Goals	Adds a project to the Commissions research portfolio that addresses key technical and scientific barriers as mandated by the Warren-Alquist Act by: • Finalizing design for proof of concept tests. • Conducting meeting with manufacturer to discuss manufacturability and costs. • Testing prototype system. • Performing cost analysis. • Performing life cycle cost analyses.
Contractor	J. Schripsema & Associates, LLC
PIER Manager	Alec F. Jenkins

This project is being conducted by the California Energy Commission's Public Interest Energy Research (PIER) program. PIER supports energy research and development that improves the quality of life in California by bringing environmentally safe, affordable, and reliable energy services and products to the marketplace.

Metallic Interconnects for SOFC Systems: Surface Engineering for Improved Durability and Reduced Contact Resistance

The Problem	Technological advances and a growing population in California demand a set of alternative energy technologies that are readily available, more affordable , and domestically derived.
Proposed Research	The purpose of this project is to determine the feasibility of developing solid oxide fuel cells to reduce degradation rates associated with oxidation and improve system performance and durability.
Research Justification and Goals	Adds a project to the Commissions research portfolio that has the potential to enhance the reliability, peaking power, and storage capabilities of renewable energy as mandated by the Warren-Alquist Act by: • Performing baseline oxidation studies of candidate metallic alloys. • Developing surface chemistries via sputtering approaches and inter-diffusion mechanisms. • Using pre-oxidation procedures to seed growth of oxide scales with large grains. • Evaluating oxidation behavior. • Devising a test plan.
Contractor	University of California, Irvine
PIER Manager	Alec F. Jenkins

This project is being conducted by the California Energy Commission's Public Interest Energy Research (PIER) program. PIER supports energy research and development that improves the quality of life in California by bringing environmentally safe, affordable, and reliable energy services and products to the marketplace.

Non-Restrictive Pressure Relief Heat Trap

The Problem	The feasibility of using a spring-loaded design to produce non-restrictive pressure relieving heat traps to reduce standby losses of electric tank-type water heaters in California needs to be determined.
Proposed Research	The purpose of this project is to determine the feasibility of using a spring-loaded design to produce non-restrictive pressure relieving heat traps to reduce standby losses of electric tank-type water heaters in California.
Research Justification and Goals	Adds a project to the Commissions research portfolio that emphasizes innovative energy supply and end use technologies, focusing on their reliability, affordability, and environmental attributes as mandated by the Warren-Alquist Act by: • Demonstrating that it is technologically possible to fabricate heat traps using this design • Developing a prototype test plan • Conducting tests in accordance with the test plan • Analyzing the test results • Analyzing the costs and benefits to Californial ratepayers • Demonstrating the most efficient ways to distribute the improved heat traps to California consumers.
Contractor	Advanced Conservation Technologies, Inc.
PIER Manager	Alec F. Jenkins

This project is being conducted by the California Energy Commission's Public Interest Energy Research (PIER) program. PIER supports energy research and development that improves the quality of life in California by bringing environmentally safe, affordable, and reliable energy services and products to the marketplace.

Petrophysical Interpretation of Fractures and Fluids in Geothermal Fields for Improved Energy Generation

The Problem	Geothermal resources have proven to be a valued renewable energy resource for California. Geothermal areas are limited in the state, so better techniques are needed to extract as much energy from these reservoirs cost-effectively.
Proposed Research	The purpose of this project is to demonstrate the feasibility of a technique that will better estimate and interpret fracture zones and the nature of fluids in geothermal systems, thereby giving energy producers vital information to increase the efficiency and economics of geothermal energy generation.
Research Justification and Goals	Adds a project to the Commissions research portfolio that addresses key technical and scientific barriers as mandated by the Warren-Alquist Act by: • Obtaining well processed seismic data as input for DGI (Direct Geothermal Indicator) processing. • Obtaining synthetic seismic data suitable as input for (Direct Geothermal Indicator) processing. • Demonstrating that DHI (Direct Hydrocarbon Indicator) algorithms provide valid results in geothermal reservoirs. • Obtaining DGI (Direct Geothermal Indicator) processed data. • Producing maps of likely fracture and fluid distribution in the Coso Geothermal System. • Demonstrating the validity of DGI data for the characterization of geothermal reservoirs by matching predictions from attribute analysis with known geological data
Contractor	3DGeo Development, Inc.
PIER Manager	Alec F. Jenkins

This project is being conducted by the California Energy Commission's Public Interest Energy Research (PIER) program. PIER supports energy research and development that improves the quality of life in California by bringing environmentally safe, affordable, and reliable energy services and products to the marketplace.

Phase-Change Frame Walls (PCFWs) for Peak Demand Reduction, Load Shifting, and Energy Conservation in California

The Problem	The recent California energy crisis along with the rapid growth in the use of air conditioning in the transitional and coastal climates, calls for the adoption of a technology that will increase energy efficiency.
Proposed Research	The purpose of this project is to research the feasibility of developing an optimized phase-change structural insulated panels that may reduce peak load air conditioning demand and provide energy savings in California's coastal and transitional climates.
Research Justification and Goals	Adds a project to the Commissions research portfolio that emphasizes innovative energy supply and end use technologies, focusing on their reliability, affordability, and environmental attributes as mandated by the Warren-Alquist Act by: • Demonstrating peak wall heat flux reductions of at least 20% on average using prototypes. • Conducting additional prototype tests to demonstrate controlled indoor temperature. • Refining the computer model. • Performing cost analysis • Confirming that the projected cost of 0.83% increase per ft2 continues to be supported.
Contractor	University of Kansas
PIER Manager	Alec F. Jenkins

This project is being conducted by the California Energy Commission's Public Interest Energy Research (PIER) program. PIER supports energy research and development that improves the quality of life in California by bringing environmentally safe, affordable, and reliable energy services and products to the marketplace.

Solar CAT Critical Technology Demonstration

The Problem	The solar compressed air turbine (Solar CAT) is a proposed technology that would use concentrated solar energy in conjunction with stored compressed air to drive a high speed alternator to generate a steady supply of electricity during peak demand hours in California. Overall efficiency of the process should be high. The critical component that needs to be developed is the high speed alternator, which must be designed to self-cool while generating electricity.
Proposed Research	The purpose of this project is to determine the feasibility of designing a high-speed alternator for a solar compressed air turbine.
Research Justification and Goals	Adds a project to the Commissions research portfolio that has the potential to enhance the reliability, peaking power, and storage capabilities of renewable energy as mandated by the Warren-Alquist Act by: • Ensuring stable operation over entire operating range. • Proving 40,000 hour service life. • Proving 84% turbine efficiency. • Proving greater than 96% alternator efficiency. • Supporting production cost estimate of less than $8,000.
Contractor	Brayton Energy, LLC
PIER Manager	Alec F. Jenkins

This project is being conducted by the California Energy Commission's Public Interest Energy Research (PIER) program. PIER supports energy research and development that improves the quality of life in California by bringing environmentally safe, affordable, and reliable energy services and products to the marketplace.

EISG Active Projects from Previous Years

A Low-NOx Porous Ceramics Burner Performance Study

The Problem	As a result of the state of California's increasingly stringent emissions and energy efficiency requirements, there is a strong need for technological advancements and improvements in the design of burners for emissions control and energy efficient performance.
Proposed Research	The purpose of this project is to determine the feasibility of developing a low NOx (nitric oxide and nitrogen dioxide pollutants collectively referred to as NOx) porous ceramic burner design that will meet emissions requirements and mitigate the use of post combustion emissions control technologies, while producing a higher "radiation heat release rate" than existing free flame burners.
Research Justification and Goals	Adds a project to the Commissions research portfolio that emphasizes innovative energy supply and end use technologies, focusing on their reliability, affordability, and environmental attributes as mandated by the Warren-Alquist Act; and supports California's goal to meet its energy growth needs while optimizing resource efficiency per the Energy Action Plan 2003 by: • Fabricating and testing prototype porous ceramic burners. • Demonstrating that the prototype porous ceramic burners are capable of reducing NOx (nitrogen oxides) emissions below the current "best available" technology. • Demonstrating that the porous ceramic burners are capable of achieving a radiant heat output 25% more efficient than that of free flame burners. • Demonstrating that the prototype multi-layer porous ceramic burners increase combustion stability resulting in extension of the lean flammability limit as compared to current ceramic fiber mat burners.
Contractor	Florida Institute of Technology
PIER Manager	Alec F. Jenkins

This project is being conducted by the California Energy Commission's Public Interest Energy Research (PIER) program. PIER supports energy research and development that improves the quality of life in California by bringing environmentally safe, affordable, and reliable energy services and products to the marketplace.

A New Physical Water Treatment Technology for Energy-Efficient Water-Cooled Air Conditioning Systems

The Problem	Electrical energy requirements for the operation of water cooled air-conditioning systems in residential, commercial, and public buildings account for a significant amount of total energy expense in California.
Proposed Research	The purpose of this project is to determine the feasibility of keeping condenser tubes free of both mineral and bio-fouling using a new technology that will allow water-cooled air conditioning systems to run significantly closer to the design efficiency (bio-fouling is the attachment of an organism or organisms to a surface in contact with water for a period of time).
Research Justification and Goals	Adds a project to the Commissions research portfolio that addresses key technical and scientific barriers as mandated by the Warren-Alquist Act by: • Developing a new PWT (Physical Water Treatment) technology. • Fabricating a prototype of the new PWT (Physical Water Treatment) technology. • Fabricating the fouling test facility. • Conducting prototype testing for validation of mineral and bio-fouling mitigation. • Conducting manufacturing cost analysis to prove that the projected device cost of $2,500 continues to be realistic based on discussions with vendors and a basic economic analysis. • Conducting a lifecycle cost and savings analysis to prove that the projected life cycle cost of $500 per for regular maintenance and 10% savings in electricity continues to be supported.
Contractor	Choson Research Corp.
PIER Manager	Alec F. Jenkins

This project is being conducted by the California Energy Commission's Public Interest Energy Research (PIER) program. PIER supports energy research and development that improves the quality of life in California by bringing environmentally safe, affordable, and reliable energy services and products to the marketplace.

A Novel Integrated Doubly-Fed Electric Alternator/Active Filter (IDEA) for Wind Power Applications

The Problem	Wind power is a key renewable resource for California and therefore presents a significant opportunity where new technology can improve the interaction between the turbine generator and the utility line it feeds
Proposed Research	The purpose of this project is to determine the feasibility of integrating a low-cost active filter for power factor correction into the power electronics that controls doubly-fed electric alternators used on state-of-the-art variable speed wind turbines. By improving the quality of power entering the utility grid, this filter will improve the economics of wind power generation.
Research Justification and Goals	Adds a project to the Commissions research portfolio that has the potential to enhance the reliability, peaking power, and storage capabilities of renewable energy as mandated by the Warren-Alquist Act by: • Confirming that the mathematical model of the concept developed in this project is capable of supporting accurate computer simulations. • Identifying the optimal operating points for cost effective operation of the overall system through prototype testing.
Contractor	Texas A&M University
PIER Manager	Alec F. Jenkins

This project is being conducted by the California Energy Commission's Public Interest Energy Research (PIER) program. PIER supports energy research and development that improves the quality of life in California by bringing environmentally safe, affordable, and reliable energy services and products to the marketplace.

A PCM Slurry System to Decrease Peak Air Conditioning Loads

The Problem	Phase change material (PCM) slurry systems have the advantage of low energy consumption and the ability to absorb large amounts of energy cost effectively. Two issues need to be researched in order to demonstrate concept feasibility. These issues are developing and maintaining high volume fraction PCM slurries and the demonstration that pumping the PCM slurry through the heat exchanger can absorb and reject peak air conditioning loads in a cost effective manner.
Proposed Research	The purpose of this project is to research the feasibility of developing a low cost phase change material (PCM) slurry mixture to absorb peak loads in air conditioning units.
Research Justification and Goals	Adds a project to the Commissions research portfolio that effectively balances the risks, benefits, and time horizons for various activities and investments that will provide tangible benefits for California electricity ratepayers as mandated by the Warren-Alquist Act by: • Developing and demonstrating a phase change material slurry mixture capable of absorbing 30% or greater peak air conditioning load. • Demonstrating a production cost range of $40-$160 per kilowatt for heating.
Contractor	Leading Technology Designs, Inc.
PIER Manager	Alec F. Jenkins

This project is being conducted by the California Energy Commission's Public Interest Energy Research (PIER) program. PIER supports energy research and development that improves the quality of life in California by bringing environmentally safe, affordable, and reliable energy services and products to the marketplace.

A Unique Dielectric Light Injector for Ultra Efficient Photovoltaic Cavity Converters: A Novel Approach for Advanced Solar Concentrators and Directed Laser Power Beam Applications

The Problem	California can benefit from electricity generated from renewable solar technologies. Currently, flat-panel photovoltaic (PV) technologies have low-efficiency and are not cost competitive. A more efficient, space-saving, cost-effective PV technology is needed.
Proposed Research	The purpose of this project is to determine the feasibility of designing, fabricating, and testing a novel Dielectric Light Injector for highly efficient collection, transmission and extraction of concentrated solar radiation into a small spherical space.
Research Justification and Goals	Adds a project to the Commissions research portfolio that has the potential to enhance the reliability, peaking power, and storage capabilities of renewable energy as mandated by the Warren-Alquist Act by: • Predicting light injector efficiency and determining the flux uniformity inside the cavity. • Demonstrating that all components meet specifications. • Demonstrating light throughput greater than 95%. • Demonstrating that flux uniformity inside the cavity is within 10%. • Performing manufacturing cost analysis by confirming that the projected manufacturing costs support the projected electricity cost of $2 per watt.
Contractor	United Innovations, Inc.
PIER Manager	Alec F. Jenkins

This project is being conducted by the California Energy Commission's Public Interest Energy Research (PIER) program. PIER supports energy research and development that improves the quality of life in California by bringing environmentally safe, affordable, and reliable energy services and products to the marketplace.

A Zero Current Ripple, Energy Efficiency and Reliable Low Cost Residential and Commercial Zero Emission Direct Power-Conversion System

The Problem	Photovoltaic (PV) and hydrogen fuel cells are two front-runner alternative solutions to existing fossil-fueled generation. However, both technologies require power control electronics to convert their direct current output to residential and commercial alternating current power. A U.S. Department of Energy analysis shows that the cost of existing power-conversion devices must be reduced by 40% so that power conversion equipment is removed as an economic barrier to alternative generation.
Proposed Research	The purpose of this project is to determine the feasibility of a low cost power-electronics system for residential and commercial applications that interfaces seamlessly to fuel-cell or photovoltaic energy sources yielding multiple benefits: lower cost; higher energy savings and power density; enhanced durability for the energy sources (fuel and photovoltaic cells); and increased reliability of power conditioning systems.
Research Justification and Goals	Adds a project to the Commissions research portfolio that emphasizes innovative energy supply and end use technologies, focusing on their reliability, affordability, and environmental attributes as mandated by the Warren-Alquist Act by: • Finalizing the system design. • Packaging a subscale 5kW prototype device. • Fabricating the subscale 5kW prototype device. • Fabricating a test stand for the power electronics system proving capable of supporting the operation for 200 hours. • Debugging the system. • Conducting prototype testing. • Conducting manufacturing cost analysis showing that projected cost of $40/kWh continues to be supported.
Contractor	University of Illinois
PIER Manager	Alec F. Jenkins

This project is being conducted by the California Energy Commission's Public Interest Energy Research (PIER) program. PIER supports energy research and development that improves the quality of life in California by bringing environmentally safe, affordable, and reliable energy services and products to the marketplace.

Actively Controlled Jet Injection in Gas Turbine Engine

The Problem	California air quality is significantly impacted by the design of the air jets used to combust fuel in gas turbines. Gas turbines are huge consumers of fuel and emitters of NOx. They represent a key emitter that can be made more efficient and less polluting at once by advances in the transverse jet.
Proposed Research	The purpose of this project is to research the feasibility of developing and studying control strategies for the optimization of penetration, spread, and mixing associated with the actively forced cross flow of the air in the transverse jet.
Research Justification and Goals	Adds a project to the Commissions research portfolio that emphasizes innovative energy supply and end use technologies, focusing on their reliability, affordability, and environmental attributes as mandated by the Warren-Alquist Act by: • Determining optimal open- and closed-loop control strategies for pulsed transverse dilution jets to achieve maximum reduction of NOx emissions. • Developing combustor design specifications for incorporating pulsed air jets, actuators and sensors. • Performing 3D vortex element simulations corresponding to experimental conditions. • Developing and testing controller from time-series pressure experimental data.
Contractor	University of California, Los Angeles
PIER Manager	Alec F. Jenkins

This project is being conducted by the California Energy Commission's Public Interest Energy Research (PIER) program. PIER supports energy research and development that improves the quality of life in California by bringing environmentally safe, affordable, and reliable energy services and products to the marketplace.

Advanced Generation of H2 and CO from Improved Methane-Carbon Dioxide-Steam Reforming Process, for use as Fuel and Methanol, Gasoline Synthesis Gas

The Problem	Utilization and upgrading of CO2-containing methane streams such as those from landfills and oil refinery waste gases can produce hydrogen to power fuel cells. Conversion of the above feedstocks and waste gas streams to synthesis gas for use in fuel cell systems is of considerable importance to California energy consumers both energetically and economically because fuel cells provide clean energy efficiently.
Proposed Research	The purpose of this project is to research the feasibility of using a catalysis reaction to convert waste gas streams containing carbon dioxide (CO2) and methane to carbon monoxide and hydrogen, of which the hydrogen can be used to power fuel cells.
Research Justification and Goals	Adds a project to the Commissions research portfolio that effectively balances the risks, benefits, and time horizons for various activities and investments that will provide tangible benefits for California electricity ratepayers as mandated by the Warren-Alquist Act by: • Demonstrating the feasibility of producing synthesis gas from landfill gas by a catalytic reactor step. • Developing catalysts capable of achieving conversions in a one-reaction reactor step. • Demonstrating conversion efficiencies of 60-95% for CH4 and 40-75% for CO2. • Integrating the process to a hydrogen based fuel system.
Contractor	Zoe Ziaka
PIER Manager	Alec F. Jenkins

This project is being conducted by the California Energy Commission's Public Interest Energy Research (PIER) program. PIER supports energy research and development that improves the quality of life in California by bringing environmentally safe, affordable, and reliable energy services and products to the marketplace.

AGF Pasteurization Process Assessment, Orange County, CA

The Problem	Agricultural waste, sewage sludge, and manure are underutilized energy resources that can be tapped with better technology.
Proposed Research	The purpose of this project is to research the feasibility of a pilot plant using an anoxic gas flotation pasteurization process to more efficiently convert organic materials such as agricultural waste, sewage sludge, and manure into fuel gas and Class A residual solids.
Research Justification and Goals	Adds a project to the Commissions research portfolio that addresses key technical and scientific barriers as mandated by the Warren-Alquist Act by: • Constructing a pilot plant capable of processing 400 gpd of sewage sludge. • Developing an optimized methodology for operating the processing plant. • Conducting a feasibility analysis based on the pilot plant's performance.
Contractor	Cyclus Envirosystems, Inc.
PIER Manager	Alec F. Jenkins

This project is being conducted by the California Energy Commission's Public Interest Energy Research (PIER) program. PIER supports energy research and development that improves the quality of life in California by bringing environmentally safe, affordable, and reliable energy services and products to the marketplace.

Agripower-Renewable Generation: Agricultural Waste & Forest-Thinnings-To-Energy

The Problem	In California and across the world, farms and orchards generate nearly 8 million dry tons of agricultural waste each year and use about 175 trillion British thermal unit's (Btu) annually. These biomass wastes represent some 120 trillion Btu's that could take the place of natural gas in generating process heat or electricity.
Proposed Research	The purpose of this project is to research the feasibility of a new biomass combustion turbine that uses an open Brayton Cycle and modular design called Agripower.
Research Justification and Goals	Adds a project to the Commissions research portfolio that emphasizes innovative energy supply and end use technologies, focusing on their reliability, affordability, and environmental attributes as mandated by the Warren-Alquist Act by: • Producing a 200 kilowatt biomass powered prototype generator. • Developing computerized control software for the generator. • Analyzing the feasibility of fuel feed system based on performance of prototype system. • Providing a cost effective and environmentally friendly solution for converting a variety of waste biomass feedstocks into electricity and heat.
Contractor	PMC Biomass, LLC.
PIER Manager	Alec F. Jenkins

This project is being conducted by the California Energy Commission's Public Interest Energy Research (PIER) program. PIER supports energy research and development that improves the quality of life in California by bringing environmentally safe, affordable, and reliable energy services and products to the marketplace.

An Innovative Approach to Stabilize the Thermal Conductivity of Air Plasma-Sprayed Thermal Barrier Coatings

The Problem	Sintering (i.e. densification of the coating) in gas turbine engines causes the thermal conductivity of thermal barrier coatings to increase by as much as 100-150% during service, greatly reducing the ability of the thermal coating to protect the underlying structure from temperature extremes. The end result of an increase in the thermal conductivity of the coating is that the gas turbine must be operated at lower temperatures or more cooling must be provided for the hot components. Either of these results decreases the efficiency of electricity production.
Proposed Research	The purpose of this project is to research the feasibility of increasing overall efficiency of land-based turbines via an innovative materials solution employing micro-structurally designed thermal barrier coatings.
Research Justification and Goals	Adds a project to the Commissions research portfolio that effectively balances the risks, benefits, and time horizons for various activities and investments that will provide tangible benefits for California electricity ratepayers as mandated by the Warren-Alquist Act by: • Producing a thermal barrier coating capable of maintaining a thermal conductivity of 1.2 W/m- K over 500 hrs at 1400°C (2552° F). • Producing colloidal suspensions of 1-mm diameter stabilized zirconia and dopants that can be plasma sprayed without agglomeration. • Optimizing the plasma-spray parameters for each stabilized zirconia/dopant. • Reducing the amount of sintering that occurs in the coatings by reducing grain growth.
Contractor	Purdue University
PIER Manager	Alec F. Jenkins

This project is being conducted by the California Energy Commission's Public Interest Energy Research (PIER) program. PIER supports energy research and development that improves the quality of life in California by bringing environmentally safe, affordable, and reliable energy services and products to the marketplace.

Application Feasibility Study of Gravitational Non-equilibrium Heat Pumps and Heat Engines

The Problem	Non equilibrium heat engines are steady state/oscillating devices in which the fundamental principle of operation is entirely dependent on at least part of the system never reaching equilibrium. Despite specific examples having been modeled and prototyped with success, a comprehensive understanding of their properties for the purposes of engineering applications does not yet exist. Apart from this hindrance to their widespread use, they may lead to a considerable advance in renewable energy technology. This study is concerned with a particular configuration called a Gravitational Heat Engine for electricity generation from low grade heat.
Proposed Research	The purpose of this project is to investigate the feasibility of generating electricity from low grade heat using gravitational heat engines.
Research Justification and Goals	Adds a project to the Commissions research portfolio that emphasizes innovative energy supply and end use technologies, focusing on their reliability, affordability, and environmental attributes as mandated by the Warren-Alquist Act by: • Constructing a functional prototype. • Optimizing performance by testing various parameters. • Demonstrating system efficiency of conversion from solar radiation to electricity between 2-10%.
Contractor	Thomas C.B. Smith
PIER Manager	Alec F. Jenkins

This project is being conducted by the California Energy Commission's Public Interest Energy Research (PIER) program. PIER supports energy research and development that improves the quality of life in California by bringing environmentally safe, affordable, and reliable energy services and products to the marketplace.

Application of Stochastic Filtering and Control Methodology to the Optimization of Wind Turbine Control Design

The Problem	Wind power is an important asset in meeting California's renewable portfolio requirements. Wind turbines use control systems to enable the turbines to respond to short term gusts and shifts in wind direction. Better control means more generation and increased turbine reliability. Achieving better control in order to obtain more renewable energy at lower cost to electric rate payers is an ongoing problem in the wind turbine industry.
Proposed Research	The purpose of this project is to demonstrate the feasibility of applying stochastic filtering and control theories to the problem of improving energy production and mitigating transient fatigue loads for large-scale wind turbines.
Research Justification and Goals	Adds a project to the Commissions research portfolio that has the potential to enhance the reliability, peaking power, and storage capabilities of renewable energy as mandated by the Warren-Alquist Act by: • Achieving a comprehensive nonlinear dynamical system model for the stochastic control problem of large scale wind turbines. • Enhancing the performance of controls by utilizing accurate measurement of wind speed. • Deriving optimal control algorithms for the nonlinear stochastic control problem, and develop systematic procedures for wind turbine control design. • Achieving an accurate model by comparing simulation result with NREL existing wind turbine data. • Demonstrating 3-5% reduction in the cost of wind energy.
Contractor	University of California, Los Angeles
PIER Manager	Alec F. Jenkins

This project is being conducted by the California Energy Commission's Public Interest Energy Research (PIER) program. PIER supports energy research and development that improves the quality of life in California by bringing environmentally safe, affordable, and reliable energy services and products to the marketplace.

Attic and Crawl Space Ventilation Air Heat Exchanger

The Problem	Air-to-air heat exchangers used in residential and small commercial buildings have either low efficiency or high cost.
Proposed Research	The purpose of this project is to research the feasibility of developing a low-cost air-to-air heat exchanger capable of 50% or greater efficiency for use in residential and small commercial buildings. Utilizing a heat exchanger to temper the air before conditioning it will result in reduced building loads leading to down sizing of the HVAC equipment. It will also reduce energy consumption and electrical demand, making the exchanger cost-efficient in the short-run.
Research Justification and Goals	Adds a project to the Commissions research portfolio that emphasizes innovative energy supply and end use technologies, focusing on their reliability, affordability, and environmental attributes as mandated by the Warren-Alquist Act by: • Constructing two or more full-scale prototype air-to-air-heat exchangers. • Designing a hardware connection for conventional HVAC equipment. • Reducing the installed cost of air-to-air heat exchangers by up to 90%. • Conducting a feasibility assessment based on prototype performance testing.
Contractor	University of Oregon
PIER Manager	Alec F. Jenkins

This project is being conducted by the California Energy Commission's Public Interest Energy Research (PIER) program. PIER supports energy research and development that improves the quality of life in California by bringing environmentally safe, affordable, and reliable energy services and products to the marketplace.

Automating Window Sunshade Control: Toward the Zero Energy House

The Problem	In California, one of the largest draws on the energy sector is air conditioning units. Oftentimes these units are competing not only with outdoor and indoor heat, but with unshaded windows allowing still more heat to be trapped inside the building.
Proposed Research	The purpose of this project is to demonstrate the feasibility of a new kind of microprocessor controlled thermostat that incorporates outdoor temperature sensors to control automated sunshades that reduce the heat load on air conditioners in the summer.
Research Justification and Goals	Adds a project to the Commissions research portfolio that emphasizes innovative energy supply and end use technologies, focusing on their reliability, affordability, and environmental attributes as mandated by the Warren-Alquist Act by: • Developing, building, programming, and testing a microprocessor controlled thermostat that can sense both indoor and outdoor temperature. • Creating a computer program optimized for the best indoor air-temperature control. • Reducing residential air-conditioning costs by reducing the solar heat gained through windows. • Increasing efficiency by allowing the shades to automatically adjust to weather changes without the need of human interaction.
Contractor	University of California, Los Angeles
PIER Manager	Alec F. Jenkins

This project is being conducted by the California Energy Commission's Public Interest Energy Research (PIER) program. PIER supports energy research and development that improves the quality of life in California by bringing environmentally safe, affordable, and reliable energy services and products to the marketplace.

Biofiltration Abatement of Landfill Gas Energy Exhaust Pollutants

The Problem	"Landfill gas" (LFG) is the common term for methane rich gas generated from decomposing organic waste in landfills. Emitted to the atmosphere, LFG is now known to have substantial adverse effects, including addition to the "greenhouse effect", contribution to stratospheric ozone depletion, and local air pollution. The feasibility of a landfill gas capture and cleanup technology needs to be tested that might potentially generate electricity from this renewable resource amounting to approximately 300-500 additional megawatts for California alone while mitigating much of the harmful environmental impacts of LFG.
Proposed Research	The purpose of this project is to determine the feasibility of a biofiltration strategy to clean the exhaust of an internal combustion engine running on landfill gas.
Research Justification and Goals	Adds a project to the Commissions research portfolio that emphasizes innovative energy supply and end use technologies, focusing on their reliability, affordability, and environmental attributes as mandated by the Warren-Alquist Act by: • Examining pollutant removal kinetics under gas flow conditions and waste conditions representative of full-scale operations. • Establishing laboratory conditions wherein both CO and NOx are reduced by at least 50% and possibly much more (up to 90+%). • Testing bioremediation of gas pollutants under laboratory gas flow conditions such that projected full-scale back pressure will not lessen IC engine thermal efficiency by more than 5%. • Projecting efficiency, engineering and operational parameters of full-scale pollutant removal for large scale landfill IC engine operation.
Contractor	Don Augenstein
PIER Manager	Alec F. Jenkins

This project is being conducted by the California Energy Commission's Public Interest Energy Research (PIER) program. PIER supports energy research and development that improves the quality of life in California by bringing environmentally safe, affordable, and reliable energy services and products to the marketplace.

Biomass-to-Syngas, Novel Low-Cost Counter-Current Process

The Problem	Existing methods for converting biomass into clean burning syngas have demonstrated the technical feasibility of making syngas from biomass, but current methods require too many costly sequential processing steps (syngas is the name given to gasses of varying composition that are generated in coal gasification and some types of waste-to-energy facilities).
Proposed Research	The purpose of this project is to determine the feasibility of a novel biomass-to-syngas process specifically designed for the low-cost conversion of biomass into high-quality syngas suitable for use in solid oxide fuel cells for power generation..
Research Justification and Goals	Adds a project to the Commissions research portfolio that has the potential to enhance the reliability, peaking power, and storage capabilities of renewable energy as mandated by the Warren-Alquist Act by: • Producing syngas from 3 different biomass feedstocks. • Verifying thermal conversion efficiency for biomass to syngas of 50%, with total conversion to electricity efficiency of 30%. • Extrapolating bench scale data to the farm scale and confirming projected system conversion efficiency of 70%, with total conversion to electricity of 42%. • Demonstrating projected cost of 3-5 cents kWh and total capital costs of $18 k/ton/day for farm scale units.
Contractor	Individual
PIER Manager	Alec F. Jenkins

This project is being conducted by the California Energy Commission's Public Interest Energy Research (PIER) program. PIER supports energy research and development that improves the quality of life in California by bringing environmentally safe, affordable, and reliable energy services and products to the marketplace.

Biosolar Conversion of Carbon Dioxide into Hydrogen Via Bacteria Embedded in Colloidal Gas Aphrons

The Problem	California can benefit from the production of hydrogen from microbial consumption of carbon dioxide (a greenhouse gas) into hydrogen. Hydrogen is a valued fuel to power fuel cells and possibly future vehicles. The removal of carbon dioxide also benefits California by reducing greenhouse emissions. Developing an inexpensive, efficient, scalable, and reliable system for producing hydrogen from microbial consumption of carbon dioxide is needed.
Proposed Research	The purpose of this project is to research the feasibility of developing an inexpensive, efficient, scalable, autonomous and reliable system for producing hydrogen from microbial consumption of carbon dioxide.
Research Justification and Goals	Adds a project to the Commissions research portfolio that addresses key technical and scientific barriers as mandated by the Warren-Alquist Act by: • Conducting system modeling and design for optimization. • Demonstrating the feasibility and operability of the proposed concept with a prototype. • Conducting performance analysis. • Performing scalability, manufacturability and cost analysis of the sub-scale integrated system.
Contractor	University of California, Los Angeles
PIER Manager	Alec F. Jenkins

This project is being conducted by the California Energy Commission's Public Interest Energy Research (PIER) program. PIER supports energy research and development that improves the quality of life in California by bringing environmentally safe, affordable, and reliable energy services and products to the marketplace.

Build and Test a 3 kW Prototype of a Co-Axial, Multi-Rotor Wind Turbine

The Problem	Wind electric generation is one of the key renewable sources of electricity featured in state energy policy and in the renewable portfolio standards. As with other renewable resources, the cost of wind power should be reduced to make it more affordable to electric rate payers.
Proposed Research	The purpose of this project is to determine the feasibility of a low-cost wind turbine design that incorporates 7 rotors on a horizontal shaft. A 3 kilowatt prototype will be fabricated and tested as part of the project. The new design, now proven in small models, combines the power of multiple smaller rotors mounted to a single elongate driveshaft to give the same power as a single larger rotor with less cost, weight, and complexity. This research will pave the way for more advanced turbines utilizing this new co-axial, multi-rotor technology.
Research Justification and Goals	Adds a project to the Commissions research portfolio that has the potential to enhance the reliability, peaking power, and storage capabilities of renewable energy as mandated by the Warren-Alquist Act by: • Fabricating 3 kilowatt wind turbine. • Demonstrating that the wind turbine generates 3 kilowatts in 27 mph wind. • Demonstrating that the wind turbine continues to generate full power at wind speeds over the rated wind speed of 27 mph. • Demonstrating that the wind turbine generates at least 3 times more power at low and medium wind speeds than a single-rotor turbine of the same diameter. • Demonstrating that the wind turbine design is capable of protecting the turbine against overspeed in winds up to 50 mph. • Demonstrating that the proposed prototype wind turbine will operate for the 6 month testing period with at least 90% uptime. • Demonstrating that a projected life cycle cost of $0.04/kWh for the proposed design continues to be supported.
Contractor	Selsam Innovations
PIER Manager	Alec F. Jenkins

This project is being conducted by the California Energy Commission's Public Interest Energy Research (PIER) program. PIER supports energy research and development that improves the quality of life in California by bringing environmentally safe, affordable, and reliable energy services and products to the marketplace.

Carbon Catalyzed Natural Gas Processing

The Problem	The feasibility of a technology to produce both carbon monoxide (CO)-free hydrogen for PEM fuel cells and nanostructured carbon for carbon fuel cells needs to be determined.
Proposed Research	The purpose of this project is to determine the feasibility of producing both carbon monoxide (CO)-free hydrogen for PEM fuel cells and nanostructured carbon for carbon fuel cells through a precisely controlled chemical processing of natural gas catalyzed by nanostructured carbon resulting in four times the hydrogen gas (H2) yield of conventional thermal cracking process. This technology eliminates the complex CO removal processes in conventional hydrogen production such as steam reforming and gas shift reaction. Therefore it will increase the hydrogen quality, reduce the production cost, and be more competitive.
Research Justification and Goals	Adds a project to the Commissions research portfolio that addresses key technical and scientific barriers as mandated by the Warren-Alquist Act by: • Demonstrating that the proposed modification to a chemical reactor is capable of producing 600 liters/hr of hydrogen. • Demonstrating that the hydrogen produced contains undetectable CO. • Demonstrating the ability to convert 60% of the CH4 feedstock to H2 in a single pass. • Demonstrating that the projected hydrogen production can be achieved at a temperature between 1000 and 1300 degrees celcius. • Demonstrating that the CH4 conversion to hydrogen can occur in less than 1.0 second residence time in the chemical reactor. • Demonstrating that the H2 and carbon can be successfully separated from the stream. • Confirming that the nanostructured carbon produced in conjunction with the H2 production has the desired electrochemical properties needed for use in carbon fuel cells. • Determining the optimal parameters (temperature, residence time, CH4 concentration, flow rate, and bed surface area) for maximum H2 yield from CH4. • Performing an energy and economic analysis.
Contractor	Sunnyside Technologies, Inc.
PIER Manager	Alec F. Jenkins

This project is being conducted by the California Energy Commission's Public Interest Energy Research (PIER) program. PIER supports energy research and development that improves the quality of life in California by bringing environmentally safe, affordable, and reliable energy services and products to the marketplace.

Carbon Foam Based NOx Biofilter

The Problem	The costs associated with removing post combustion nitrogen oxides (NOx) from combustion gases are very high and limit the use of alternative fuels in California. Carbon foam, used as a filter, may provide a cost-effective method for removing NOx products from the waste stream of combustion generation.
Proposed Research	The purpose of this project is to research the feasibility of using Ultramet carbon foam as a packing material in a post combustion nitrogen oxides (NOx) biofilter to increase efficiency and reduce capital cost.
Research Justification and Goals	Adds a project to the Commissions research portfolio that addresses key technical and scientific barriers as mandated by the Warren-Alquist Act by: • Designing and constructing three scaled biofilter columns and pack them with carbon foam of varying pore dimensions. • Verifying that NO2 is removed with equal or greater efficiency than NO. • Determining design parameters for scaling a biofilter to a prototype commercial system. • Developing an appropriate packed-bed mass transfer model that can be used to provide accurate cost estimates for full-scale applications. • Determining if abiotic NO reactions were an explanation for non-constant concentration dependence of the NO removal efficiency observed.
Contractor	University of California, Davis
PIER Manager	Alec F. Jenkins

This project is being conducted by the California Energy Commission's Public Interest Energy Research (PIER) program. PIER supports energy research and development that improves the quality of life in California by bringing environmentally safe, affordable, and reliable energy services and products to the marketplace.

Closed Cycle Valved Cell Heat Engine

The Problem	Many engines utilized in California are small to medium heat engines, which, in order to operate efficiently, require very high temperatures, most times provided by the burning of hydrocarbons.
Proposed Research	The purpose of this project is to determine the feasibility of creating a small to medium sized closed cycle valved cell (CCVC) engine that can operate efficiently at lower temperatures off sources other than hydrocarbons, such as solar or geothermal.
Research Justification and Goals	Adds a project to the Commissions research portfolio that addresses key technical and scientific barriers as mandated by the Warren-Alquist Act by: • Constructing and testing the initial prototype closed cycle valved cell (CCVC) engine. • Determining whether or not a mature CCVC engine can be fabricated in a manner that is likely to be economically feasible. • Determining whether or not a mature CCVC engine is likely to be capable of operating from external heat sources in the range of 500-800 degrees Fahrenheit.
Contractor	Joseph Bland
PIER Manager	Alec F. Jenkins

This project is being conducted by the California Energy Commission's Public Interest Energy Research (PIER) program. PIER supports energy research and development that improves the quality of life in California by bringing environmentally safe, affordable, and reliable energy services and products to the marketplace.

Construction and Testing of a High-Efficiency Solar Water Still

The Problem	In certain arid agricultural regions such as the San Joaquin Valley, there is currently a pressing need to desalinate and recycle irrigation drainage water to lower the water table of saline ground water, and to do this in a way that is economical and that does not require large amounts of energy.
Proposed Research	The purpose of this project is to determine the feasibility, performance, and operating characteristics of a novel, solar water still to desalinate and recycle irrigation drainage water to lower the water table of saline ground water.
Research Justification and Goals	Adds a project to the Commissions research portfolio that effectively balances the risks, benefits, and time horizons for various activities and investments that will provide tangible benefits for California electricity ratepayers as mandated by the Warren-Alquist Act by: • Fabricating an initial prototype of solar water still having a polyethylene film canopy. • Demonstrating that the polyethylene still prototype will produce more than 2.5 gal/m2/ day on average and consume less than 4 Whr/gal on average. • Demonstrating a projected cost of $490/AF for desalinating drainage water having a salinity of less than 10,000 TDS.
Contractor	The Starburst Foundation
PIER Manager	Alec F. Jenkins

This project is being conducted by the California Energy Commission's Public Interest Energy Research (PIER) program. PIER supports energy research and development that improves the quality of life in California by bringing environmentally safe, affordable, and reliable energy services and products to the marketplace.

Controlling Fouling with Rice Straw Blends in Biomass Boilers

The Problem	Virtually all annual growth plant materials contain substantial concentrations of alkali metals. The situation today is such that herbaceous fuels are virtually unusable by many biomass generators, because alkalis form deposits on firesides and heat transfer surfaces. The build up is so severe that generators experience a rapid decline in energy revenue and increasing maintenance costs. However recent evidence suggests that the addition of rice straw to conventional wood fuel blends can, under some circumstances, limit alkali metals released to the atmosphere and reduce fouling rates on heat exchangers.
Proposed Research	The purpose of this project is to research the feasibility of adding rice straw amendments to wood-based fuels in order to minimize alkali volatilization and thus to restrict fouling potential.
Research Justification and Goals	Adds a project to the Commissions research portfolio that emphasizes innovative energy supply and end use technologies, focusing on their reliability, affordability, and environmental attributes as mandated by the Warren-Alquist Act by: • Quantifying fouling potential of rice straw fuel blends. • Determining optimal rice straw fuel blends for reducing fouling. • Demonstrating that a minimum addition of 10% rice straw can be accomplished without a proportional increase in fouling rate.
Contractor	University of California, Davis
PIER Manager	Alec F. Jenkins

This project is being conducted by the California Energy Commission's Public Interest Energy Research (PIER) program. PIER supports energy research and development that improves the quality of life in California by bringing environmentally safe, affordable, and reliable energy services and products to the marketplace.

Covell Village - A Model for Sustainable Communities

The Problem	The feasibility of designing a planned community that incorporates a comprehensive energy plan that reduces energy consumption by 50% compared to buildings in compliance with current Title 24 energy standards needs to be determined.
Proposed Research	The purpose of this project is to determine the feasibility of designing a planned community that incorporates a comprehensive energy plan that reduces energy consumption by 50% compared to buildings in compliance with current Title 24 energy standards (California's Energy Efficiency Standards for Residential and Nonresidential Buildings). The plan would incorporate energy efficient building construction, renewable energy sources, distributed co-generation and district heating and cooling strategies.
Research Justification and Goals	Adds a project to the Commissions research portfolio that addresses key technical and scientific barriers as mandated by the Warren-Alquist Act by: • Demonstrating that total energy use is less than 10 kWh/ft2 with electrical use target of 4.5 kWh/ft2 per year. • Demonstrating that the home prices are within 10% conventional Title 24 homes. • Demonstrating that monthly mortgage and energy costs are less than those for Title 24 homes. • Demonstrating carbon dioxide emission reductions of 40% or more relative to standard development. • Demonstrating a return on investment of 11% or greater.
Contractor	Davis Energy Group, Inc.
PIER Manager	Alec F. Jenkins

This project is being conducted by the California Energy Commission's Public Interest Energy Research (PIER) program. PIER supports energy research and development that improves the quality of life in California by bringing environmentally safe, affordable, and reliable energy services and products to the marketplace.

Demonstration of Energy Efficient Enhancement in Refrigeration Appliances by Incorporation of Practical, Low Cost Thermal Energy Storage

The Problem	Refrigeration and cooling are major contributors to energy demand and are therefore tempting targets for innovations that will cost-effectively improve their efficiency.
Proposed Research	The purpose of this project is to demonstrate the feasibility of using a novel thermal energy storage design to increase the energy efficiency of refrigeration and cooling appliances. Target refrigeration appliances include domestic appliances (combination or stand alone refrigerators and freezers), notoriously inefficient compact refrigerators (found in hotel rooms, dorm rooms, home bars, etc and now being mass marketed by major retail chains), commercial vending and display cases, domestic and small commercial air conditioning systems, etc. Thermal energy storage (TES), when appropriately incorporated into refrigeration appliances, improves energy efficiency by stabilizing the evaporation temperature and eliminating the inefficient low temperature excursions typical of on/off modulated vapor-compression refrigeration systems. Additional efficiency and other benefits include a narrower operating temperature range and more stable storage temperatures and humidity levels. For vending and display cases, TES can provide reserve capacity for peak cooling loads (e.g., chilling new warm product) thus eliminating the need for a high capacity cooling system with compromised efficiency under steady-state conditions. For small capacity A/C TES can provide stored capacity enabling peak load shifting and interruptible or off-peak power utilization.
Research Justification and Goals	Adds a project to the Commissions research portfolio that emphasizes innovative energy supply and end use technologies, focusing on their reliability, affordability, and environmental attributes as mandated by the Warren-Alquist Act by: • Designing, fabricating and installing an integral TES module incorporating encapsulated phase change material on one model of domestic refrigerators. • Demonstrating a greater than 20% improvement in energy efficiency using integral TES in a compact stand-alone refrigerator. • Demonstrating capsule design compatibility with twin sheet forming, fluid type and convective flow optimization.
Contractor	TES Technology, Inc.
PIER Manager	Alec F. Jenkins

This project is being conducted by the California Energy Commission's Public Interest Energy Research (PIER) program. PIER supports energy research and development that improves the quality of life in California by bringing environmentally safe, affordable, and reliable energy services and products to the marketplace.

Desiccant Enhanced Indirect/Direct Evaporative Cooling System

The Problem	Most conventional AC units require two separate components to cool the air and then to dehumidify it. The potential exists to save energy if this process of cooling and dehumidifying can be performed by only one component.
Proposed Research	The purpose of this project is to demonstrate the feasibility of a new air conditioning design that incorporates indirect/direct evaporative cooling and dehumidification using natural gas.
Research Justification and Goals	Adds a project to the Commissions research portfolio that emphasizes innovative energy supply and end use technologies, focusing on their reliability, affordability, and environmental attributes as mandated by the Warren-Alquist Act by: • Designing a system with a SEER rating greater than 30 as opposed to traditional vapor compression units, which have a SEER of 10-16. • Developing increased potential to shift some of the peak electrical load used for alternating current (AC) to natural gas. • Increasing the comfort and indoor air quality by supplying up to 100% outdoor air to the conditioned space. • Improving performance over existing techniques. The system can be used as a total cooling solution for western climates and eliminate the need for conventional vapor compression systems.
Contractor	Innovative Research Enterprises
PIER Manager	Alec F. Jenkins

This project is being conducted by the California Energy Commission's Public Interest Energy Research (PIER) program. PIER supports energy research and development that improves the quality of life in California by bringing environmentally safe, affordable, and reliable energy services and products to the marketplace.

Detecting Optimal Fan Pressure

The Problem	Building climate control is a substantial source of energy demand in California, particularly during the summer months. Eliminating unnecessary energy consumption by a building's air-handling system may be a less costly alternative to retrofitting buildings with replacement systems.
Proposed Research	The purpose of this project is to determine the feasibility of using a new algorithm for determining the optimal pressure at which to operate variable air volume (VAV) air-handling systems.
Research Results	The project results revealed that there should be further research conducted to determine the potential for using InCITe (functional tests and data processing technique that is based on a simple model of system behavior) for leakage diagnosis. The research should investigate the potential for improving accuracy at low flow. This should be a two part effort. First, InCITe should be tested at low flow with a laboratory test stand. If the results are promising, InCITe should be tested as a leakage diagnostic in a field installation where leakage rates are known by some other means such as tracer gas measurements.
Research Justification and Goals	Adds a project to the Commissions research portfolio that emphasizes innovative energy supply and end use technologies, focusing on their reliability, affordability, and environmental attributes as mandated by the Warren-Alquist Act by: • Fabricating a test stand for the system. • Demonstrating a 5% accuracy in determining optimal pressure the presence of time-varying controlled flow. • Determining the best flow exponent. • Demonstrating insensitivity to pressure sensor location. • Demonstrating insensitivity to measurement noise. • Quantifying the increase in energy efficiency for VAV HVAC units if successful.
Contractor	Federspiel Controls
PIER Manager	Alec F. Jenkins

This project is being conducted by the California Energy Commission's Public Interest Energy Research (PIER) program. PIER supports energy research and development that improves the quality of life in California by bringing environmentally safe, affordable, and reliable energy services and products to the marketplace.

Development of a Borehole Seismic Receiver Array for Geothermal Wells

The Problem	There are temperature limitations for the equipment now in use in borehole measurements. The feasibility needs to be determined of developing a borehole seismic receiver array for geothermal wells capable of operating in a temperature range of 200 to 250°C, to increase the number of wells that can be assessed for geothermal energy production potential.
Proposed Research	The purpose of this project is to research the feasibility of developing a borehole seismic receiver array for geothermal wells capable of operating in a temperature range of 200 to 250°C, to increase the number of wells that can be assessed for geothermal energy production potential.
Research Justification and Goals	Adds a project to the Commissions research portfolio that addresses key technical and scientific barriers as mandated by the Warren-Alquist Act by: • Developing a much larger seismic receiver array that can operate at much higher temperatures than existing technology. • Developing a cable design capable of withstanding operational temperatures of 200 to 250°C. • Designing and construct a prototype five-level high-temperature borehole seismic-receiver array. • Conducting a feasibility assessment based on prototype performance testing in a field setting.
Contractor	Paulsson Geophysical Services
PIER Manager	Alec F. Jenkins

This project is being conducted by the California Energy Commission's Public Interest Energy Research (PIER) program. PIER supports energy research and development that improves the quality of life in California by bringing environmentally safe, affordable, and reliable energy services and products to the marketplace.

Development of a Modular Scroll-Turbine-Based Organic-Ranking Cycle (ORC)

The Problem	Electricity generation from low-temperature heat sources generally implies the use of organic fluids working in Rankine cycles equipped with vapor turbines or expanders. Such systems are already used in the industrial sector, mainly in geothermal power plants, but only for medium and large power applications (some hundreds of kWe and more). There are few alternatives for small-scale applications (less than 100 kW). Their primary limitations are the lack of availability of turbines or expanders with adequate efficiencies, in particular when having to cope with high-expansion ratios and variable operating conditions, and high specific costs because of low initial production quantities.
Proposed Research	The purpose of this project is to determine the feasibility of developing a 5 kilowatt micro-power generation system based on the organic-Rankine cycle that incorporates a two-stage scroll turbine to reduce cost.
Research Justification and Goals	Adds a project to the Commissions research portfolio that effectively balances the risks, benefits, and time horizons for various activities and investments that will provide tangible benefits for California electricity ratepayers as mandated by the Warren-Alquist Act by: • Fabricating an organic rankine cycle scroll turbine prototype. • Demonstrating 15% efficiency for single organic rankine cycle. • Demonstrating the organic rankine cycle scroll turbine can operate at least 300 hours without failure. • Demonstrating a organic rankine cycle system cost of $1500/kWh and a life cycle cost of $.05/kWh.
Contractor	EnefTech Corporation
PIER Manager	Alec F. Jenkins

This project is being conducted by the California Energy Commission's Public Interest Energy Research (PIER) program. PIER supports energy research and development that improves the quality of life in California by bringing environmentally safe, affordable, and reliable energy services and products to the marketplace.

Development of an Effective Fire-Shield for Powerpoles by Custom Tailoring a Mineral Polymer Material

The Problem	A pole fire-shield is simply a protective sleeve applied around a wood pole starting at ground level and extending up to about three times the height of the surrounding brush. These pole fire shields are of vital importance to California utilities because they effectively increase the survivability of transmission and distribution poles during raging brushfires. A newly developed inorganic mineral polymer could be used with glass fibers resulting in excellent fire barrier properties with the toughness properties needed for it to function as a pole fire-shield at a lower cost, higher energy efficiency, and greater environmental benefits.
Proposed Research	The purpose of this project is to research the feasibility of developing a low-cost fire shield for power poles made out of a newly developed mineral polymer material and glass fibers.
Research Justification and Goals	Supports California's goal to pursue all cost-effective load management and demand response programs on California's water systems per the Integrated Energy Policy Report Update 2004 by: • Fabricating prototype test samples of new fire-shield material. • Studying the prototype durability and effectiveness. • Demonstrating an estimated cost of $600-$1000 per pole.
Contractor	Composite Support & Solutions, Inc.
PIER Manager	Alec F. Jenkins

This project is being conducted by the California Energy Commission's Public Interest Energy Research (PIER) program. PIER supports energy research and development that improves the quality of life in California by bringing environmentally safe, affordable, and reliable energy services and products to the marketplace.

Development of Low Cost High Efficiency Heterojunction Organic Solar Cell Using Inkjet and Screen Printing Techniques

The Problem	The three major cost areas of solar power are materials, fabrication, and ancillary equipment. California's renewable resource portfolio standards have set significant goals for solar power, which makes it important to lower economic barriers to solar power generation.
Proposed Research	The purpose of this project is to determine the feasibility of using the combination of inkjet and screen-printing technologies to fabricate low-cost organic solar cells. This project addresses the problem of cost first by using lower cost materials, and second by introducing a lower cost fabrication process.
Research Justification and Goals	Adds a project to the Commissions research portfolio that has the potential to enhance the reliability, peaking power, and storage capabilities of renewable energy as mandated by the Warren-Alquist Act by: • Demonstrating inkjet printing of the polymeric electrode into micro-lens array shape. • Fabricating a prototype solar cell in which the polymeric electrode is inkjet printed onto a flexible plastic substrate, the organic active layer is screen-printed on the polymeric electrode and the metallic electrode is vacuum deposited on the organic active layer. • Fabricating a prototype solar cell in which the polymeric electrode is inkjet printed onto a flexible plastic substrate, the organic active layer is screen-printed on the polymeric electrode and the metallic electrode is screen-printed on the organic active. • Conducting testing of the prototype solar cell. • Demonstrating greater than 4% efficiency in an all printed organic solar cell.
Contractor	University of Arizona
PIER Manager	Alec F. Jenkins

This project is being conducted by the California Energy Commission's Public Interest Energy Research (PIER) program. PIER supports energy research and development that improves the quality of life in California by bringing environmentally safe, affordable, and reliable energy services and products to the marketplace.

Development of Magnesium Diboride-Based Superconductor/Metal Matrix Composite Wire for use in Superconducting Transformers

The Problem	Approximately 10% of electricity generated is lost due to finite resistance in transformer wire found in transmission lines, generators, motors, etc.
Proposed Research	The purpose of this project is to determine the feasibility of developing a robust high-current magnesium diboride based superconductor/metal matrix composite wire and tape for use in superconducting transformers operating at temperatures in excess of 20K.
Research Justification and Goals	Adds a project to the Commissions research portfolio that has the potential to enhance transmission and distribution capabilities as mandated by the Warren-Alquist Act by: • Demonstrating engineering critical current densities greater than 20,000A/cm2 at 20K in self-field, and greater than 10,000A/cm2 at 20K in 1 Tesla applied magnetic field for 10cm sections of MgB2 SMMCää (Magnesium Diboride) (Superconductor/Metal Matrix Composite) wire.
Contractor	Nove Technologies
PIER Manager	Alec F. Jenkins

This project is being conducted by the California Energy Commission's Public Interest Energy Research (PIER) program. PIER supports energy research and development that improves the quality of life in California by bringing environmentally safe, affordable, and reliable energy services and products to the marketplace.

Development of Single Fan Multi-Stack Exhaust Systems

The Problem	The State of California has a large number of high technology facilities, such as university campuses, government buildings, and industrial plants. Exhaust fans run 24/7 to exhaust toxic air. These fans consume considerable amounts of electricity, which contributes to electrical peak demand.
Proposed Research	The purpose of this project is to determine the feasibility of developing a single-fan multi-stack system which will greatly reduce the exhaust fan annual energy used for both existing and new facilities.
Research Justification and Goals	Supports California's goal to develop strategies to achieve additional savings in existing buildings per the Integrated Energy Policy Report 2003; and to maximize the energy efficiency potential of existing buildings per the Integrated Energy Policy Report 2003 by: • Developing a single fan multi-stack system for retrofitting the existing systems in California facilities. • Developing a single fan multi-stack system for a new system design in facilities in California. • Fabricating a full-scale prototype single fan, multi-stack exhaust system. • Demonstrating that the projected payback period of 4 years is supported in a retrofit and new construction application at a California facility
Contractor	University of Nebraska
PIER Manager	Alec F. Jenkins

This project is being conducted by the California Energy Commission's Public Interest Energy Research (PIER) program. PIER supports energy research and development that improves the quality of life in California by bringing environmentally safe, affordable, and reliable energy services and products to the marketplace.

Development of Universal Software for Dissolved Oxygen Control in the Activated Sludge Process

The Problem	Waste water treatment plants use computer technology to control the many processes involved in waste pumping, oxygenation, and treatment. However, the control software has not evolved as rapidly as have concerns about the energy use and lack of energy efficiency of the waste treatment process.
Proposed Research	The purpose of this project is to determine the feasibility of developing control software capable of reliably regulating dissolved oxygen levels in the activated sludge process at wastewater treatment plants by quickly detecting hardware malfunctions (failing valves and pumps) that impact dissolved oxygen (DO) levels. The project applies the latest concepts in artificial intelligence to develop software that will learn the best control setting for pumps and valves for the variety of operating conditions encountered in waste treatment. The result of better system control will be improved efficiency and economy.
Research Justification and Goals	Adds a project to the Commissions research portfolio that emphasizes innovative energy supply and end use technologies, focusing on their reliability, affordability, and environmental attributes as mandated by the Warren-Alquist Act by: • Investigating the dissolved oxygen sensor technology and developing the sensor fault detection algorithm applicable to all dissolved oxygen sensor technologies. • Developing a dissolved oxygen control algorithm that utilizes model based feed-forward and feed-back control. • Developing airflow valves and blower control algorithms that will provide a robust supply of airflow to each aeration zone at minimum energy cost. • Developing computer software utilizing a dissolved oxygen control algorithm. • Testing software at a full scale waste water facility to demonstrate that 100% sensor fault detection is achieved. • Demonstrating that a minimum 5% reduction in energy consumption is used.
Contractor	Ekster & Associates
PIER Manager	Alec F. Jenkins

This project is being conducted by the California Energy Commission's Public Interest Energy Research (PIER) program. PIER supports energy research and development that improves the quality of life in California by bringing environmentally safe, affordable, and reliable energy services and products to the marketplace.

Distributed Generation Drivetrain for Windpower Application

The Problem	As the size of wind turbines has grown, rates of revolution have decreased and power has increased, thus increasing the torque seen on the turbines' gearboxes. Because of this detrimental scaling effect, gearboxes now comprise increasing percentages of the total capital and lifetime costs, limiting the potential to reduce energy costs. Increasing failures of the larger gearboxes have resulted in the most substantial financial loss to the industry in recent years, posing a serious concern for the industry as a whole.
Proposed Research	The purpose of this project is to research the feasibility of an innovative drivetrain design for large-scale wind turbines. The researcher has developed and engineered a new gearbox concept that addresses this high-torque low-rotational speed stumbling block.
Research Justification and Goals	Adds a project to the Commissions research portfolio that effectively balances the risks, benefits, and time horizons for various activities and investments that will provide tangible benefits for California electricity ratepayers as mandated by the Warren-Alquist Act by: • Fabricating a prototype drivetrain for 200 kilowatt wind turbine. • Fabricating a prototype controller. • Conducting a feasibility analysis based on performance of prototype controller and drivetrain.
Contractor	Dehlsen Associates, LLC
PIER Manager	Alec F. Jenkins

This project is being conducted by the California Energy Commission's Public Interest Energy Research (PIER) program. PIER supports energy research and development that improves the quality of life in California by bringing environmentally safe, affordable, and reliable energy services and products to the marketplace.

Dry Steam Scrubbing for Impurity Removal from Geothermal Steam

The Problem	The necessary traditional steam washing for removing volatile chloride from geothermal steam reduces the steam's mass and energy for power generation.
Proposed Research	The purpose of this project is to determine the feasibility of developing a steam scrubbing technology that will effectively remove and/or treat corrosive hydrogen chloride (HCI) in geothermal steam so that the maximum amount of mass and energy can be retained for power generation.
Research Justification and Goals	Adds a project to the Commissions research portfolio that has the potential to enhance the reliability, peaking power, and storage capabilities of renewable energy as mandated by the Warren-Alquist Act by: • Upgrading an existing pilot plant for use in testing multistage calcite bed DSS (dry steam scrubbing) processes in California. • Fabricating and testing between 8 to 10 prototype calcite bed configurations. • Demonstrating that the multistage calcite bed DSS process does not reduce the steam temperature by more than 10 degrees F. • Demonstrating that the multistage calcite bed DSS process does not result in a pressure drop greater than 15 psi. • Demonstrating that low level direct amine injection is capable of cost effectively mitigating the remaining HCI in steam after primary treatment with the multistage calcite bed DDS. • Confirming that the proposed multistage calcite bed DSS (dry steam scrubbing) system can be operated at a cost which is less than the current water wash process.
Contractor	Thermochem, Inc.
PIER Manager	Alec F. Jenkins

This project is being conducted by the California Energy Commission's Public Interest Energy Research (PIER) program. PIER supports energy research and development that improves the quality of life in California by bringing environmentally safe, affordable, and reliable energy services and products to the marketplace.

Efficient Lighting by Sensing and Actuating with MEMS Smart Dust Motes

The Problem	California can benefit from efficient lighting technologies. Developing and testing 'Smart Dust Motes' for sensing, actuating and personalizing dimmable fluorescent lighting systems will reduce electricity usage.
Proposed Research	The purpose of this project is to research the feasibility of developing and testing 'Smart Dust Motes' for sensing, actuating and personalizing dimmable fluorescent lighting systems.
Research Justification and Goals	Adds a project to the Commissions research portfolio that addresses key technical and scientific barriers as mandated by the Warren-Alquist Act by: • Completing design of a prototype for wireless open loop light actuation. • Finalizing test plans and implementing testing for open loop actuation. • Finalizing architecture for intelligent closed loop actuation and control. • Conducting "Proof of Concept" testing for wireless sensing and actuating with motes. • Conducting cost analysis with a targeted performance metric of a 2 year payback period on costs.
Contractor	University of California, Berkeley
PIER Manager	Alec F. Jenkins

This project is being conducted by the California Energy Commission's Public Interest Energy Research (PIER) program. PIER supports energy research and development that improves the quality of life in California by bringing environmentally safe, affordable, and reliable energy services and products to the marketplace.

Emission Monitoring of Nitric Oxide with a Mid-IR Solid State Laser

The Problem	To encourage environmentally safe electric generation, regional air quality districts have been tightening the allowable emissions of gas-fired power plants. The limits set for nitric oxides are now so low that they lie below the detection threshold of conventional emissions monitors.
Proposed Research	The purpose of this project is to determine the detection limits for nitric oxide at combustion exhaust conditions using a mid-infrared solid-state laser. The ultimate goal of this research is to determine the feasibility of replacing traditional nitric oxide emission monitoring with a new solid-state laser technology. This new laser technology, in addition to the potential for improved detection limits, can be multiplexed to provide measurements at multiple locations and by using other wavelengths access other species of interest: nitrogen dioxide (NO2), carbon monoxide (CO), carbon dioxide (CO2), Ammonia (NH3), etc.
Research Justification and Goals	Adds a project to the Commissions research portfolio that emphasizes innovative energy supply and end use technologies, focusing on their reliability, affordability, and environmental attributes as mandated by the Warren-Alquist Act by: • Fabricating a one-meter long combustion-exhaust simulator with optical access. • Verifying that the simulator is capable of maintaining a temperature of 500k. • Verifying that the simulator can produce nitric oxide concentrations in the range of 0.1 to 1 ppmv with an accuracy of +/-0.5 ppm. • Modeling the expected infrared absorption spectra for nitric oxide. • Verifying the elimination of interference from water vapor and other combustion species at the combustion exhaust composition and temperature. • Verifying the theoretical accuracy of the nitric oxide concentration measurement based on the absorbance. • Demonstrating the prototype nitric oxide sensor is capable of measuring nitric oxide concentrations in the range of 0.1 to 1 ppm with an accuracy of 0.05 ppm. • Developing a cost estimate for the commercial use of the mid-IR laser measurement of nitric oxide.
Contractor	University of California, San Diego
PIER Manager	Alec F. Jenkins

This project is being conducted by the California Energy Commission's Public Interest Energy Research (PIER) program. PIER supports energy research and development that improves the quality of life in California by bringing environmentally safe, affordable, and reliable energy services and products to the marketplace.

End-Use Efficient, Environmentally Friendly Water Softening Device

The Problem	California's urban water is presently softened by an ion exchange (IE) process. As ion exchange softeners are eliminated to protect the environment, end-use efficient, environmentally friendly replacement technology is needed.
Proposed Research	The purpose of this project is to determine the feasibility of using an advanced flow through capacitor in conjunction with new ionic charge barriers to effectively soften tap water with low energy consumption.
Research Justification and Goals	Adds a project to the Commissions research portfolio that emphasizes innovative energy supply and end use technologies, focusing on their reliability, affordability, and environmental attributes as mandated by the Warren-Alquist Act by: • Fabricating and designing the system. • Evaluating rejection efficiency. • Evaluating energy usage. • Calculating energy costs. • Demonstrating a competitive comparison.
Contractor	Material Methods, LLC
PIER Manager	Alec F. Jenkins

This project is being conducted by the California Energy Commission's Public Interest Energy Research (PIER) program. PIER supports energy research and development that improves the quality of life in California by bringing environmentally safe, affordable, and reliable energy services and products to the marketplace.

Energy Efficient Municipal and Industrial Odor-Control Equipment Study

The Problem	Old technology to control wastewater treatment odor employs large motors that are continuously operated in most facilities. Large motors are required to run pumps, compressors, or blowers (depending on the equipment design) to move the foul air and either re-circulate large quantities of liquid, or make large volumes of compressed air for atomizing nozzles. Needed is a more effective and efficient process for managing treatment orders.
Proposed Research	The purpose of this project is to research the feasibility of a new energy efficient process for eliminating odors at wastewater treatment facilities. This new technology utilizes a more effective oxidant and mixes it into the foul air stream with low-pressure nozzles.
Research Justification and Goals	Adds a project to the Commissions research portfolio that effectively balances the risks, benefits, and time horizons for various activities and investments that will provide tangible benefits for California electricity ratepayers as mandated by the Warren-Alquist Act by: • Demonstrating the new technology removes hydrogen sulfide from a wastewater foul air stream as well or better than conventional mist type odor control. • Demonstrating the new technology will remove 80% more noxious and toxic compounds than conventional mist and packed bed scrubbers.
Contractor	Pacific Rim Design & Development, Inc.
PIER Manager	Alec F. Jenkins

This project is being conducted by the California Energy Commission's Public Interest Energy Research (PIER) program. PIER supports energy research and development that improves the quality of life in California by bringing environmentally safe, affordable, and reliable energy services and products to the marketplace.

Energy Production from Bulk Wastewater

The Problem	Wastewater treatment processes are not designed to produce hydrogen, a higher value product than the methane now produced. The feasibility of breeding wastewater microorganisms capable of efficient biosynthesis of hydrogen gas needs to be determined.
Proposed Research	The purpose of this project is to research the feasibility of breeding wastewater microorganisms capable of efficient biosynthesis of hydrogen gas.
Research Justification and Goals	Adds a project to the Commissions research portfolio that addresses key technical and scientific barriers as mandated by the Warren-Alquist Act by: • Selecting strains of chemotrophic species known to exhibit high levels of biosynthetic H2 production. • Designing and constructing assemblies to allow for isolation, growth and H2 production from mutant microorganisms. • Developing high throughput screening system sensitive to H2 evolution. • Developing pilot plant design with cost analyses for the integration of the chemosynthetic lead mutants. • Constructing a bench-scale bioreactor on the optimal organisms isolated.
Contractor	University of California, Santa Barbara
PIER Manager	Alec F. Jenkins

This project is being conducted by the California Energy Commission's Public Interest Energy Research (PIER) program. PIER supports energy research and development that improves the quality of life in California by bringing environmentally safe, affordable, and reliable energy services and products to the marketplace.

Fault Location Techniques for Distribution Feeders Containing Distributed Generation

The Problem	The ability to determine an accurate fault location on a distribution line has become very beneficial in helping power companies in California to improve service to customers when a fault does occur, thereby increasing efficiency and decreasing costs. Existing fault location methods used for distribution systems that contain distributed generation have proven to show a lack of accuracy in fault location results.
Proposed Research	The purpose of this project is to determine the feasibility of a fault location method capable of locating faults on distribution lines containing distributed generation within a 1% error rate.
Research Justification and Goals	Adds a project to the Commissions research portfolio that addresses key technical and scientific barriers as mandated by the Warren-Alquist Act by: • Developing a modified fault location method for power distribution lines that includes distributed generation power sources. • Demonstrating that the proposed method is capable of locating faults on distribution lines containing distributed generation within a 1% error rate. • Demonstrating that the proposed method is capable of locating faults on distribution lines containing distributed generation within 100 milliseconds of the fault occurrence.
Contractor	Clemson University
PIER Manager	Alec F. Jenkins

This project is being conducted by the California Energy Commission's Public Interest Energy Research (PIER) program. PIER supports energy research and development that improves the quality of life in California by bringing environmentally safe, affordable, and reliable energy services and products to the marketplace.

Feasibility of a Hydrogen Blower Design for Fuel Cell Recirculation Applications

The Problem	Hydrogen fuel cells are expensive to manufacture in part because of the platinum used as the catalyst for the cell reactions.
Proposed Research	The purpose of this project is to demonstrate the feasibility of using a unique blower design for recirculation of anode tail-gas in a hydrogen-fueled fuel cell system application. The net result of effective recirculation in a hydrogen fuel cell is a reduction in the amount of platinum catalyst that must be used in production. Significant savings in the cost of each fuel cell unit is the result since platinum is very expensive. A fuel cell with proper recirculation could cut material costs by as much as 30%. This would result in an estimated savings of $0.003/kWh over the life of the power plant.
Research Justification and Goals	Adds a project to the Commissions research portfolio that has the potential to enhance the reliability, peaking power, and storage capabilities of renewable energy as mandated by the Warren-Alquist Act by: • Constructing an approx. 7 cm blower prototype capable of supporting PEM fuel cells in the range of 1-10 kW. • Demonstrating the proposed design is capable of operating 500 hours in a humidified hydrogen environment without malfunction. • Demonstrating that the proposed blower design is capable of achieving the proposed performance levels.
Contractor	H2Systems, Inc.
PIER Manager	Alec F. Jenkins

This project is being conducted by the California Energy Commission's Public Interest Energy Research (PIER) program. PIER supports energy research and development that improves the quality of life in California by bringing environmentally safe, affordable, and reliable energy services and products to the marketplace.

Field Feasibility Determination of a Novel Energy-Saving Refrigeration Controller

The Problem	Industrial and commercial refrigeration units in California oftentimes depend on inefficient control technologies, resulting in poor performance and high energy usage.
Proposed Research	The purpose of this research is to determine the real-world feasibility of installing a demand-defrost controller on large scale refrigeration units to more accurately sense appropriate defrost times.
Research Justification and Goals	Adds a project to the Commissions research portfolio that emphasizes innovative energy supply and end use technologies, focusing on their reliability, affordability, and environmental attributes as mandated by the Warren-Alquist Act; and provides for the future market utilization of projects funded through the program as mandated by the Warren-Alquist Act by: • Demonstrating that the demand-defrost controller can effect 6-12% energy savings and work continuously without false alarms. • Developing a model to predict energy savings on a variety of refrigeration units. • Demonstrating that the prototype can maintain the temperature of the refrigerated space within 5 degrees of desired temperature and under various, imperfect conditions. • Showing that the device may be viably retailed for under $300.
Contractor	ADA Technologies, Inc.
PIER Manager	Alec F. Jenkins

This project is being conducted by the California Energy Commission's Public Interest Energy Research (PIER) program. PIER supports energy research and development that improves the quality of life in California by bringing environmentally safe, affordable, and reliable energy services and products to the marketplace.

Field Validation of a Model of Generation and Migration of Methane and Other Gases in Landfills

The Problem	The municipal solid waste (MSW) that is deposited in landfills undergoes anaerobic decomposition and produces a gaseous mixture called landfill gas (LFG). The use of LFG for generating electricity is a promising approach both in terms of conserving energy and also for reducing air pollution while producing electricity. The challenge that exists is to collect all the gas that is produced in the landfills, and not allow it to be inadvertently lost to the atmosphere as harmful emissions.
Proposed Research	The purpose of this project is to field test a simulator that will allow the user to predict and monitor the behavior of landfill gasses (LFGs).
Research Justification and Goals	Adds a project to the Commissions research portfolio that emphasizes innovative energy supply and end use technologies, focusing on their reliability, affordability, and environmental attributes as mandated by the Warren-Alquist Act by: • Developing a validated simulator that can predict the rate of gas generationand migration. • Increasing understanding of dynamic subsurface behavior in realtion to environmental and physical process changes.
Contractor	GC Environmental, Inc.
PIER Manager	Alec F. Jenkins

This project is being conducted by the California Energy Commission's Public Interest Energy Research (PIER) program. PIER supports energy research and development that improves the quality of life in California by bringing environmentally safe, affordable, and reliable energy services and products to the marketplace.

Flexible Low Emissions Combustor for Renewable Fuels

The Problem	California has an abundance of agricultural and urban plant wastes that contain significant energy. These are important benefits beyond the benefit of recovering the energy value in these wastes. While the benefits of using plant wastes for energy are clear, the cost to convert these wastes to usable energy is high because of the form, energy density, moisture content, ash content and emissions potential of these materials.
Proposed Research	The purpose of this project is to research the feasibility of developing a flexible low-emissions combustor (FLEC) for renewable fuels that are poorly formed, inconsistently sized, and contain large amounts of moisture.
Research Justification and Goals	Adds a project to the Commissions research portfolio that emphasizes innovative energy supply and end use technologies, focusing on their reliability, affordability, and environmental attributes as mandated by the Warren-Alquist Act by: • Achieving a NOx level of less than 30 ppmvd and CO levels of under 200 ppmvd at 3% O2. • Demonstrating particulate control to 2.73 lb/MW-hr. • Demonstrating the ability of the system to operate without labor. • Achieving a turndown of 3 to 1. • Demonstrating a cost benefit of up to 30% relative to grate based and fluidized bed systems.
Contractor	Altex Technologies Corporation
PIER Manager	Alec F. Jenkins

This project is being conducted by the California Energy Commission's Public Interest Energy Research (PIER) program. PIER supports energy research and development that improves the quality of life in California by bringing environmentally safe, affordable, and reliable energy services and products to the marketplace.

Flywheel Energy Storage Units in Power Distribution Networks

The Problem	Energy storage is one of the keys to achieving an efficient and cost-effective electricity generation and distribution system. The problem, however, is that beyond bulk hydro and compressed air energy storage, there are too few cost-effective energy storage approaches for utility distribution systems. Flywheel energy storage units rely on some form of rotational mechanical power to provide the conversion process to electrical power and are probably suitability for use in power distribution systems to maintain power quality and voltage stabilization.
Proposed Research	The purpose of this project is to research the feasibility of incorporating flywheel energy storage units into a power distribution system to improve power quality, reliability and voltage stability.
Research Justification and Goals	Adds a project to the Commissions research portfolio that has the potential to enhance the reliability, peaking power, and storage capabilities of renewable energy as mandated by the Warren-Alquist Act by: • Assembling a micro power distribution system with a 2 kW dynamic rotary uninterruptible power supply (DRUPS) unit integrated into the system. • Determining the ability of DRUPS technology to maintain power quality within a micro power distribution system.
Contractor	ELCOM
PIER Manager	Alec F. Jenkins

This project is being conducted by the California Energy Commission's Public Interest Energy Research (PIER) program. PIER supports energy research and development that improves the quality of life in California by bringing environmentally safe, affordable, and reliable energy services and products to the marketplace.

Flywheel System for Bulk Energy Storage

The Problem	Currently, California spends roughly $26 billion for electricity annually, with approximately 10% of generation coming from renewables. Unless technologies like the proposed are implemented, the percentage of electricity production coming from renewables will be limited due to lack of reliability.
Proposed Research	The purpose of this project is to research the feasibility of using a new-technology flywheel system concept for providing low-cost bulk energy storage that can improve the reliability and dispatchability of renewable electricity generation.
Research Justification and Goals	Adds a project to the Commissions research portfolio that has the potential to enhance the reliability, peaking power, and storage capabilities of renewable energy as mandated by the Warren-Alquist Act by: • Obtaining flywheel system components. • Assembling a subscale prototype that will have a capacity of at least 1.2 kWh. • Demonstrating that the magnetic bearing system is capable of achieving complete magnetic levitation of the flywheel. • Demonstrating that the flywheel can be charged to 400 m/sec (31,700 rpm). • Demonstrating that the flywheel will operate for 10 hours at 400 m/sec without failure. • Demonstrating a motor-generator efficiency of no less than 95%. • Demonstrating that total operating losses are less than 40 watts. • Demonstrating a round trip efficiency of no less than 80% assuming 2 cycles per day. • Showing from data generated in this project that a projected cost of $2/Wh and greater than 30,000-cycle life continues to be supported.
Contractor	Cobalt Energy
PIER Manager	Alec F. Jenkins

This project is being conducted by the California Energy Commission's Public Interest Energy Research (PIER) program. PIER supports energy research and development that improves the quality of life in California by bringing environmentally safe, affordable, and reliable energy services and products to the marketplace.

Geothermal Reclaimed Water Turbine

The Problem	California is in need of a technology that will generate renewable green energy, while reducing imported fossil fuels and reducing the emissions of green-house gases.
Proposed Research	The purpose of this project is to determine the feasibility of generating electricity cost effectively by recovering hydraulic energy from the wastewater that is currently being pumped into the injection wells at the Geysers.
Research Justification and Goals	Adds a project to the Commissions research portfolio that has the potential to enhance the reliability, peaking power, and storage capabilities of renewable energy as mandated by the Warren-Alquist Act; and supports California's goal to accelerate the renewable resource generation goal to 2010 per the Energy Action Plan 2003 by: • Installing a hydraulic turbine at the surface to 5,000 feet down hole. • Demonstrating from the data generated that the projected cost of electricity for the proposed system continues to be supported. • Demonstrating that the energy recovery turbine selected is capable of a minimum 50% efficiency. • Demonstrating that the prototype system will operate under operational conditions for 24 weeks without failure.
Contractor	Two-Phase Engineering and Research
PIER Manager	Alec F. Jenkins

This project is being conducted by the California Energy Commission's Public Interest Energy Research (PIER) program. PIER supports energy research and development that improves the quality of life in California by bringing environmentally safe, affordable, and reliable energy services and products to the marketplace.

Gyroton Rotary Engine Project: A Controllably Variable Compression and Displacement Rotary Engine

The Problem	The general sentiment in combustion engine technology today is that only minor improvements remain to be developed. Changes that are being introduced to product lines today offer marginal gains and are built upon previous design assumptions. Therefore, a fresh approach to the combustion engine needs to be explored for its potential benefit for fuel economy.
Proposed Research	The purpose of this project is to research the feasibility of constructing a rotary engine based on geometries that produce and follow an idealized asymmetric complete-expansion cycle. The proposed rotary engine should be a major improvement in combustion engine design using advanced geometries while building on existing rotary technologies. The geometry will allow dynamic control of both the engine's compression ratio and the engine's total displacement allowing significant improvements to efficiency in various operating conditions, such as using varied fuels and operating under low engine load requirements.
Research Justification and Goals	Adds a project to the Commissions research portfolio that emphasizes innovative energy supply and end use technologies, focusing on their reliability, affordability, and environmental attributes as mandated by the Warren-Alquist Act by: • Fabricating a 10 horsepower prototype. • Demonstrating less than 10% leakage. • Demonstrating at capitol cost of approximately $400/kW.
Contractor	Dehlsen Associates, LLC
PIER Manager	Alec F. Jenkins

This project is being conducted by the California Energy Commission's Public Interest Energy Research (PIER) program. PIER supports energy research and development that improves the quality of life in California by bringing environmentally safe, affordable, and reliable energy services and products to the marketplace.

High Efficiency Lanthanide Doped Ceria-Zirconia Layered Hybrid Electrode for SOFC Generators

The Problem	California can benefit from the electricity generated from clean fuel cell technologies. Currently, fuel cell technologies have not performed adequately at an economically feasible cost for commercial applications. Fuel cell technologies with a high efficiency, lower cost, and greater reliability are needed.
Proposed Research	The purpose of this project is to determine the feasibility of a novel approach to manufacture a higher efficiency, lower cost, long-term stability, planar solid oxide fuel cell (SOFC) electrolyte to generate electrical power.
Research Justification and Goals	Adds a project to the Commissions research portfolio that demonstrates a balance of benefits to all sectors that contribute to the funding under Section 399.8 of the Public Utilities Code as mandated by the Warren-Alquist Act by: • Developing and defining electrolyte and electrode formulations. • Fabricating electrolytes and electrodes to prove cell stack efficiency of greater than 35% at 800 degrees C. • Testing cell manufacturing to prove 20% increase in SOFC life. • Conducting manufacturing cost analysis to prove that target cost of $85-90 KWh for cell stack can be realized. • Conducting life cycle cost analysis to prove that the projected life cycle cost of $0.39/kWh continues to be supported.
Contractor	Intertec Advanced Materials, Inc.
PIER Manager	Alec F. Jenkins

This project is being conducted by the California Energy Commission's Public Interest Energy Research (PIER) program. PIER supports energy research and development that improves the quality of life in California by bringing environmentally safe, affordable, and reliable energy services and products to the marketplace.

High Efficiency Organic Thin-Film Solar Cell

The Problem	Photovoltaics currently are not cost competitive in California's deregulated electricity market.
Proposed Research	The purpose of this project is to demonstrate the feasibility of a low-cost organic thin-film solar cell device that can be fabricated using a simple robust process for organic/polymeric materials.
Research Justification and Goals	Adds a project to the Commissions research portfolio that has the potential to enhance the reliability, peaking power, and storage capabilities of renewable energy as mandated by the Warren-Alquist Act by: • Proving that the projected module manufacturing cost of $0.46/W for the new solar cell continues to be supported. This represents an 85% cost reduction over current state of the art crystalline silicon solar cells ($3/W). • Verifying the feasibility of the concept "molecular bulk heterojunction" charge separation with an organic absorber thin layer. • Developing a simple low cost methodology for fabricating the proposed flexible organic solar cell. • Fabricating solar cell devices for testing. • Demonstrating a solar cell efficiency of greater than 5%.
Contractor	InterPhases Research
PIER Manager	Alec F. Jenkins

This project is being conducted by the California Energy Commission's Public Interest Energy Research (PIER) program. PIER supports energy research and development that improves the quality of life in California by bringing environmentally safe, affordable, and reliable energy services and products to the marketplace.

High Speed Light Activated On/Off Thyristor

The Problem	Power control devices, such as are used in power control and in grid distribution systems, are expensive and relatively unreliable.
Proposed Research	The purpose of this project is to determine the feasibility an all-light controlled on/off thyristor that, in comparison to the conventional electrically controlled type, will bring increased efficiency, lower cost, and decreased emissions to electric propulsion devices.
Research Justification and Goals	Adds a project to the Commissions research portfolio that addresses key technical and scientific barriers as mandated by the Warren-Alquist Act by: • Demonstrating the feasibility of developing an all-light controlled on/off thyristor power switch. • Developing a mathematical model of the light controlled thyristor using 2D-simulation code. • Designing specifications for the required laser light source. • Devising process steps for device fabrication.
Contractor	OptiSwitch Technology, Inc.
PIER Manager	Alec F. Jenkins

This project is being conducted by the California Energy Commission's Public Interest Energy Research (PIER) program. PIER supports energy research and development that improves the quality of life in California by bringing environmentally safe, affordable, and reliable energy services and products to the marketplace.

Highly Conductive, Water Insoluble & Thermally Stable PEM from Functionalized POMs

The Problem	California needs to harness all the alternative fuel it can and one of best ways to accomplish this is to use fuel cells. However, conventional fuel cells either operate at low or high temperatures, rarely both. Development of such a fuel cell would be beneficial because it could be used in for a wider range of uses and applications.
Proposed Research	The proposed research is to develop highly proton conductive and thermally stable inorganic electrolytes for a proton exchange membrane fuel cell based on functionalized polyoxometalates (POM) membrane. By making fuel cells of this temperature resistant electrolyte, they can be used for larger energy needs, much larger than cells that power "individual" energy users, such as personal cars.
Research Justification and Goals	Adds a project to the Commissions research portfolio that has the potential to enhance the reliability, peaking power, and storage capabilities of renewable energy as mandated by the Warren-Alquist Act by: • Developing a methodology for producing polymer membranes with the specified characteristics. • Analyzing feasibility based on single cell performance testing of the most promising prototype membrane. • Increasing PEM fuel cell reliability and lifespan. • Reducing PEM fuel cell manufacturing costs by reducing the cost of the membrane from $500-$1000/m2 for Nafion to $2/m2 for the proposed membrane.
Contractor	Chemat Technology, Inc.
PIER Manager	Alec F. Jenkins

This project is being conducted by the California Energy Commission's Public Interest Energy Research (PIER) program. PIER supports energy research and development that improves the quality of life in California by bringing environmentally safe, affordable, and reliable energy services and products to the marketplace.

High-Performance, Nanostructured Cathode for Li-ion Rechargeable Battery

The Problem	California can benefit from storage technologies that provide energy when the demand is most needed. Current battery technologies are not cost competitive and have low capacity efficiency. Developing a more efficient battery at a lower cost is needed.
Proposed Research	The purpose of this project is to determine the feasibility of developing a novel nanostructured cathode with designed inter-structure for enhanced battery performance.
Research Justification and Goals	Adds a project to the Commissions research portfolio that has the potential to enhance the reliability, peaking power, and storage capabilities of renewable energy as mandated by the Warren-Alquist Act by: • Increasing the capacity of rechargeable batteries by over 50% and reducing the cost of rechargeable batteries by 30%. • Eliminating toxic materials in battery construction with environmentally friendly materials. • Providing large scale energy storage capability at a lower cost.
Contractor	University of California, Davis
PIER Manager	Alec F. Jenkins

This project is being conducted by the California Energy Commission's Public Interest Energy Research (PIER) program. PIER supports energy research and development that improves the quality of life in California by bringing environmentally safe, affordable, and reliable energy services and products to the marketplace.

High-Volume Manufacturing for Low-cost, Flexible Solar Cells

The Problem	There are several obstacles preventing the market competitiveness of photovoltaic (PV) energy in California. Current state-of the-art technology is based on copper indium diselinide (CIS) rigid glass panels, fabricated with expensive, hazardous methods that are difficult to scale up for mass production.
Proposed Research	The purpose of this project is to research the feasibility of developing a new flexible thin-film solar cell using a less expensive manufacturing process with fewer cell components relative to the state of the art solar cell.
Research Justification and Goals	Adds a project to the Commissions research portfolio that effectively balances the risks, benefits, and time horizons for various activities and investments that will provide tangible benefits for California electricity ratepayers as mandated by the Warren-Alquist Act by: • Devising a cadmium free photovoltaic (PV) cell configuration. • Developing methodology that can be easily scaled. • Reducing PV cell production cost.
Contractor	InterPhases Research
PIER Manager	Alec F. Jenkins

This project is being conducted by the California Energy Commission's Public Interest Energy Research (PIER) program. PIER supports energy research and development that improves the quality of life in California by bringing environmentally safe, affordable, and reliable energy services and products to the marketplace.

Hydrogen- Methane Waste Fermentations for Clean Electricity Generation

The Problem	Utilization of the resource base to derive energy from biogas (municipal wastewater and manures) has been limited in California, due to economic and environmental factors. The main restriction has been nitrogen oxide emissions.
Proposed Research	The purpose of this project is to determine the feasibility of two-phase anaerobic digestion processes for the production of hydrogen-methane mixtures from organic wastes that would greatly reduce (NOx) nitrogen dioxide/nitrogen oxide and other pollutants during electricity generation.
Research Justification and Goals	Adds a project to the Commissions research portfolio that emphasizes innovative energy supply and end use technologies, focusing on their reliability, affordability, and environmental attributes as mandated by the Warren-Alquist Act; and supports California's goal to meet its energy growth needs while optimizing resource efficiency per the Energy Action Plan 2003 by: • Demonstrating the capability of the two-stage process for anaerobic digestion of wastes to produce a methane fuel, known to result in clean electricity with low Nox emissions. • Demonstrating an overall digester retention time that is approximately equivalent to the retention time of conventional single stage digesters. • Demonstrating the ability of the digester to convert the same amount of organic matter in the proposed feedstock to gases as conventional single stage digesters. • Demonstrating that the fuel gases produced has the equivalent energy content as fuel gases in conventional digesters. • Confirming that the added capital and operating costs of the proposed digester does not exceed 10-15% of the costs of conventional digesters.
Contractor	Benemann Associates
PIER Manager	Alec F. Jenkins

This project is being conducted by the California Energy Commission's Public Interest Energy Research (PIER) program. PIER supports energy research and development that improves the quality of life in California by bringing environmentally safe, affordable, and reliable energy services and products to the marketplace.

IEM's Low Cost Building Performance Infrared Camera

The Problem	Performance monitoring projects across the U.S. have documented the potential to conserve 15% to 30% of energy used through improved operation and maintenance practices. Energy losses can come from a number of areas: direct loss from windows/doors, inadequate caulking/weather stripping, lack of duct and/or piping insulation, and missing insulation in ceilings, walls and/or floors. Thermal infrared imaging cameras have become an invaluable tool in performing energy audits in commercial and residential applications. This imaging provides an easy to use picture to assist the energy auditor, but the high investment cost of an infrared camera is prohibitive to many energy contractors.
Proposed Research	The purpose of this project is to research the feasibility of incorporating cost-cutting innovations in the design of an infrared camera that will reduce the retail cost from $12,000 to less than $2,500, thereby expanding their use in energy audits of commercial and residential structures.
Research Justification and Goals	Adds a project to the Commissions research portfolio that effectively balances the risks, benefits, and time horizons for various activities and investments that will provide tangible benefits for California electricity ratepayers as mandated by the Warren-Alquist Act by: • Finalizing the infrared camera design. • Fabricating a prototype. • Demonstrating a 0.1 degree C accuracy. • Demonstrating an image resolution of 2" by 15'. • Achieving an image resolution of 128 x 128. • Demonstrating a total retail cost of $2500.
Contractor	International Electronic Machines Corporation
PIER Manager	Alec F. Jenkins

This project is being conducted by the California Energy Commission's Public Interest Energy Research (PIER) program. PIER supports energy research and development that improves the quality of life in California by bringing environmentally safe, affordable, and reliable energy services and products to the marketplace.

Improved Insulation for Buildings and Refrigeration

The Problem	Research shows that a ceramic insulation made with perlite and other materials can produce an efficient insulating material. Perlite based ceramic insulators have unique properties that make them suitable for building and refrigeration applications. To make the product applicable for most insulating situations, the product should be hydrophobic, easy to manufacture, and have certain mechanical properties to make it marketable.
Proposed Research	The purpose of this project is to research the feasibility of using a low-cost perlite based ceramic insulator material for buildings and refrigeration.
Research Justification and Goals	Adds a project to the Commissions research portfolio that effectively balances the risks, benefits, and time horizons for various activities and investments that will provide tangible benefits for California electricity ratepayers as mandated by the Warren-Alquist Act by: • Producing a high efficiency ceramic thermal insulating material made from low cost materials. • Demonstrating the perlite material increases insulation efficiency compared to current state of the art. • Demonstrating the new ceramic material will be easy to manufacture and cost effective.
Contractor	Jeffrey Zuker
PIER Manager	Alec F. Jenkins

This project is being conducted by the California Energy Commission's Public Interest Energy Research (PIER) program. PIER supports energy research and development that improves the quality of life in California by bringing environmentally safe, affordable, and reliable energy services and products to the marketplace.

Improved Performance of Energy Recovery Ventilators Using Advanced Porous Heat Transfer Media

The Problem	Wasted heat in ventilation systems is expensive to recover because of the added hardware. Needed is a lower cost, efficient method to recover the waste heat for further utilization.
Proposed Research	The purpose of this project is to determine the feasibility of an energy recovery effective heat exchanger that will increase the efficiency of heat recovery ventilators to 90% efficiency.
Research Justification and Goals	Adds a project to the Commissions research portfolio that emphasizes innovative energy supply and end use technologies, focusing on their reliability, affordability, and environmental attributes as mandated by the Warren-Alquist Act by: • Determining the feasiblity of using advanced porous media in heat recovery ventilators to increase their efficiency to about 90% efficient. • Designing and fabricating porous medium samples for use in air-to-air heat exchangers. • Developing an optimized heat recovery ventilator design.
Contractor	University of California, San Diego
PIER Manager	Alec F. Jenkins

This project is being conducted by the California Energy Commission's Public Interest Energy Research (PIER) program. PIER supports energy research and development that improves the quality of life in California by bringing environmentally safe, affordable, and reliable energy services and products to the marketplace.

Industrial Energy Recycling Process and Products

The Problem	Energy efficiency gains in industry and manufacturing are a target for reducing energy demand in parallel with the goal of improving building end use efficiency. The manufacture of power supplies requires that each power supply undergo testing with the output energy discharged as heat to the atmosphere.
Proposed Research	The purpose of this project is to determine the feasibility of developing an inverter with a user-friendly interface that can be used by power supply manufacturers to recycle the electrical energy used to test new power supplies that is currently being discharged as heat.
Research Justification and Goals	Adds a project to the Commissions research portfolio that has the potential to enhance the reliability, peaking power, and storage capabilities of renewable energy as mandated by the Warren-Alquist Act by: • Finalizing design of prototype system. • Fabricating three-phase prototype power recycling units. • Finalizing test plan. • Conducting laboratory testing of prototype units. • Conducting field-testing of prototype unit at a power supply manufacturing facility. • Conducting a manufacturing cost analysis of the proposed device.
Contractor	Distributed Power Technologies, LLC
PIER Manager	Alec F. Jenkins

This project is being conducted by the California Energy Commission's Public Interest Energy Research (PIER) program. PIER supports energy research and development that improves the quality of life in California by bringing environmentally safe, affordable, and reliable energy services and products to the marketplace.

Innovative Injection-Molded Plastic Package For High-Concentration PV Cells

The Problem	California can benefit from electricity generated from clean renewable photovoltaic (PV) technologies. Currently PV systems are not cost competitive. Using a unique injected molded special material may produce a lower cost and higher performance cell package for concentrated PV systems.
Proposed Research	The purpose of this project is to determine the feasibility of using a unique injected molded special material to produce a lower cost and higher performance cell package for concentrated PV systems.
Research Justification and Goals	Adds a project to the Commissions research portfolio that has the potential to enhance the reliability, peaking power, and storage capabilities of renewable energy as mandated by the Warren-Alquist Act by: • Designing a cell package with less parts, lower material cost, and a reduced manufacturing process. • Demonstrating the feasibility of the cell package being mass produced. • Fabricating 50 cell packages. • Demonstrating the cell package is capable of surviving up to 800 times sun concentrations. • Demonstrating a 20 degree Celsius reduction in cell operating temperatures. • Demonstrating the package meets the electrical and environmental requirements. • Confirming cell package cost reduction.
Contractor	Amonix, Inc.
PIER Manager	Alec F. Jenkins

This project is being conducted by the California Energy Commission's Public Interest Energy Research (PIER) program. PIER supports energy research and development that improves the quality of life in California by bringing environmentally safe, affordable, and reliable energy services and products to the marketplace.

Innovative Wheel Concept to Increase Gas Turbine Efficiency

The Problem	Small efficient gas turbines would be valuable in stand-alone, combined heating and power applications, for distributed generation, and in combination with hybrid fuel cells. However, a major barrier to their use is that their current efficiency is not high enough to be practical in these important California distributed applications.
Proposed Research	The purpose of this project is to determine the feasibility of an innovative small gas turbine wheel concept called a REIT (Recuperated External Impulse Turbine) wheel, which can be incorporated into small Brayton-cycle gas turbines to achieve 40% efficiency in energy savings.
Research Justification and Goals	Adds a project to the Commissions research portfolio that addresses key technical and scientific barriers as mandated by the Warren-Alquist Act by: • Developing specifications and design for nozzles and nozzle assembly. • Developing specifications and design for test wheel and wheel assembly. • Developing design for testing wheel for 10 hours at 1000 degrees Fahrenheit. • Completing fabrication of wheel and nozzle components that are capable of withstanding up to 10 hours of testing at 1000 degrees F and appropriate spin rate. • Completing assembly and balancing of wheel and wheel components. • Completing fabrication of the test stand. • Conducting prototype testing. • Demonstrating achievability overall system efficiency of 40% or greater at 1,700 degrees Fahrenheit. • Demonstrating that projected life cycle cost of $0.5 kWh continues to be supported.
Contractor	Markron Technologies
PIER Manager	Alec F. Jenkins

This project is being conducted by the California Energy Commission's Public Interest Energy Research (PIER) program. PIER supports energy research and development that improves the quality of life in California by bringing environmentally safe, affordable, and reliable energy services and products to the marketplace.

Instant Snap-in Load Shed Device for Incandescent Lighting

The Problem	Independent System Operators and utility companies in the State of California are looking for ways to solve the "peak load" problem (when the demand for electricity exceeds the supply) which can result in major blackouts.
Proposed Research	The purpose of this research is to determine the feasibility of developing a screw-in adaptor for incandescent lighting that enables a 30-50 percent reduction in electric energy consumption upon receipt of a powerline signal (the same one sent to load-shed ballasts/lamps).
Research Justification and Goals	Adds a project to the Commissions research portfolio that effectively balances the risks, benefits, and time horizons for various activities and investments that will provide tangible benefits for California electricity ratepayers as mandated by the Warren-Alquist Act; and emphasizes innovative energy supply and end use technologies, focusing on their reliability, affordability, and environmental attributes as mandated by the Warren-Alquist Act by: • Identifying, designing, and prototyping an optimal dimming concept. • Identifying and testing an optimal powerline communications system. • Developing a prototype miniaturized version of the device. • Testing the final prototype device to demonstrate its ability to provide load-shedding in response to a powerline signal under a variety of scenarios.
Contractor	Rensselaer Polytechnic Institute
PIER Manager	Alec F. Jenkins

This project is being conducted by the California Energy Commission's Public Interest Energy Research (PIER) program. PIER supports energy research and development that improves the quality of life in California by bringing environmentally safe, affordable, and reliable energy services and products to the marketplace.

Integrating Evaporative Cooling with Dynamic Insulation for Occupant Thermal Comfort

The Problem	In the state of California, the impact of residential air conditioning is increasing as the majority of new construction is occurring in hotter inland areas. Residential air conditioning is an expensive electricity load for utilities to meet and therefore contributes significantly to high electricity rates.
Proposed Research	The purpose of this project is to determine the feasibility of reducing peak cooling loads and increasing design day comfort in evaporatively cooled residences through the construction of a building that uses exfiltrating air (air filtrating out of the building) to reduce exterior wall and ceiling conduction loads and lower interior surface temperatures.
Research Results	The project was able to demonstrate that a dynamic ceiling design that completely eliminates ceiling heat gain can be built in a house with minimal departure from standard construction practice and quality control. Whole building simulations indicate that a dynamic ceiling design can significantly improve thermal comfort during peak afternoon hours.
Research Justification and Goals	Adds a project to the Commissions research portfolio that emphasizes innovative energy supply and end use technologies, focusing on their reliability, affordability, and environmental attributes as mandated by the Warren-Alquist Act; and supports California's goal to improve new and remodeled building efficiency by 5 percent per the Energy Action Plan 2003 by: • Constructing a testing apparatus capable of simulating the performance of the ceilings and walls. • Bench testing data to determine the airflow rates necessary for the successful performance of designs constructed • Constructing a model to simulate the performance of an evaporatively cooled house.
Contractor	Steven Winter Associates, Inc.
PIER Manager	Alec F. Jenkins

This project is being conducted by the California Energy Commission's Public Interest Energy Research (PIER) program. PIER supports energy research and development that improves the quality of life in California by bringing environmentally safe, affordable, and reliable energy services and products to the marketplace.

LEAMS (Low Emissions Atmospheric Metering Separator)

The Problem	Geothermal power can be both expensive and environmentally unfriendly because of the cost to remove pollutants from the steam and the noise associated with pollution reducing gas separation. The steam propels a turbine generator to produce electricity and then vents to the atmosphere. Pollutants within the steam must be separated from it before releasing it into the atmosphere.
Proposed Research	The primary purpose of this project is to research the feasibility of a design change to reduce the noise level of the prototype Low Emissions Atmospheric Metering Separator (LEAMS) by 10-20 dB thus resolving the main technical obstacle to commercialization. The LEAMS project will demonstrate a better method for performing geothermal steam separation.
Research Results	This project won the 2004 R&D Magazine's R&D 100 Award. Xerox was a winner of this same award many years ago for the Xerox process.
Research Justification and Goals	Adds a project to the Commissions research portfolio that emphasizes innovative energy supply and end use technologies, focusing on their reliability, affordability, and environmental attributes as mandated by the Warren-Alquist Act by: • Reducing the noise level by 10 to 20 dB. • Reducing internal air/steam condensation by 90%. • Increasing flow capacity of existing Low Emissions Atmospheric Metering Separator (LEAMS) by 10%. • Designing secondary hydrogen sulfide abatement. • Designing expansion cells for high capacity wells.
Contractor	Two-Phase Engineering and Research
PIER Manager	Alec F. Jenkins

This project is being conducted by the California Energy Commission's Public Interest Energy Research (PIER) program. PIER supports energy research and development that improves the quality of life in California by bringing environmentally safe, affordable, and reliable energy services and products to the marketplace.

Low Cost Hybrid Inverters Utilizing IGBTs and SCRs

The Problem	Power inverters, used to convert electricity from dc to ac, constitute an enabling technology in a wide range of advanced electrical energy applications. Their application in adjustable speed motor drives continues to transform several industrial processes, resulting in dramatic performance and efficiency improvements. Any reduction in inverter cost will result in broadening their application and lead to further improvements in energy efficiency. Problems to be eliminated include input power quality, motor over voltage problems and derating needs of power distribution systems to meet harmonic loading.
Proposed Research	The purpose of this project is to research the feasibility of developing a new low-cost, reliable inverter for use in high power adjustable speed drives and distributed power generation systems.
Research Justification and Goals	Adds a project to the Commissions research portfolio that emphasizes innovative energy supply and end use technologies, focusing on their reliability, affordability, and environmental attributes as mandated by the Warren-Alquist Act by: • Fabricating a hybrid inverter suitable for variable speed drives and dc power generation systems. • Identifying specific technical objectives to characterize the performance of the inverter system. • Reducing overall adjustable speed drive system costs by 75% compared to state of the art systems. • Improving projects reliability of the inverter-motor drive system by doubling the current average life-time. • Developing and verifying system design principles for the prottype inverter to achieve a targeted efficiency of 90%.
Contractor	University of Wisconsin, Madison
PIER Manager	Alec F. Jenkins

This project is being conducted by the California Energy Commission's Public Interest Energy Research (PIER) program. PIER supports energy research and development that improves the quality of life in California by bringing environmentally safe, affordable, and reliable energy services and products to the marketplace.

Low Cost Microchannel Reformer for Hydro Production from Natural Gas

The Problem	Natural gas can be used to produce hydrogen for fuel cell use. However this production method requires further research to improve the efficiency and reliability of the process.
Proposed Research	The purpose of this project is to research the feasibility of fabricating prototype microchannel reformers for converting natural gas to hydrogen for use in fuel cells. Innovative fabrication strategies will be investigated and tested.
Research Justification and Goals	Adds a project to the Commissions research portfolio that addresses key technical and scientific barriers as mandated by the Warren-Alquist Act by: • Designing and fabricating prototype microchannel reformers using partial oxidation reactions for H2 production. • Performing testing of microchannel reactors to demonstrate conversion efficiency and catalyst performance. • Demonstrating CO levels in product stream under 10ppm. • Conducting 200 hours of continuous feasibility life tests without efficiency degradation. • Delivering two working prototype reforms to the Energy Commission.
Contractor	Makel Engineering Inc./Darby B. Makel
PIER Manager	Alec F. Jenkins

This project is being conducted by the California Energy Commission's Public Interest Energy Research (PIER) program. PIER supports energy research and development that improves the quality of life in California by bringing environmentally safe, affordable, and reliable energy services and products to the marketplace.

Low Cost, Energy Saving Motor Controller for Residential and Industrial Buildings

The Problem	Energy consumption in California as a result of the wide use of single phase motors would be significantly reduced with the proposed single-phase supplied, three-phase motor controller technology.
Proposed Research	The purpose of this project is to determine the feasibility of designing a single-phase supplied, three-phase motor controller for residential and industrial buildings.
Research Justification and Goals	Adds a project to the Commissions research portfolio that emphasizes innovative energy supply and end use technologies, focusing on their reliability, affordability, and environmental attributes as mandated by the Warren-Alquist Act by: • Building a 500 watt prototype of the proposed system. • Demonstrating greater than 70% efficiency over a 10:1 speed range. • Achieving a unit cost of less than $40.
Contractor	Otto Smith, Ph.D.
PIER Manager	Alec F. Jenkins

This project is being conducted by the California Energy Commission's Public Interest Energy Research (PIER) program. PIER supports energy research and development that improves the quality of life in California by bringing environmentally safe, affordable, and reliable energy services and products to the marketplace.

Low-Cost, High Efficiency Solar Cell Fabrication Using Inkjet Printing

The Problem	SunPower's solar cell manufacturing process and equipment is more similar to processes and equipment used by the integrated circuit industry than to other solar cell companies. Achieving high cell efficiency requires patterning very fine device features, about 0.004 of an inch (100 µm) in size. Presently, SunPower uses photolithographic processing to define the very fine patterns needed, but this is very costly. To make lower cost cells, lower cost equipment and processes must be found while not sacrificing the resolution required for high efficiency.
Proposed Research	The purpose of this project is to determine the feasibility of using low-cost high-resolution ink jet printers to define the very fine patterns needed to make high efficiency solar cells.
Research Justification and Goals	Adds a project to the Commissions research portfolio that effectively balances the risks, benefits, and time horizons for various activities and investments that will provide tangible benefits for California electricity ratepayers as mandated by the Warren-Alquist Act by: • Developing special inks for piezoelectric type inkjet printer for solar cell manufacturing. • Modifying a commercial inkjet printer to be able to print on standard 5-inch semi square silicon wafers. • Demonstrating printing at a minimum 100 µm feature resolution. • Fabricating prototype solar cells with the target efficiency of 20%. • Demonstrating a projected photovoltaic module manufacturing cost of $1.92.
Contractor	SunPower Corporation
PIER Manager	Alec F. Jenkins

This project is being conducted by the California Energy Commission's Public Interest Energy Research (PIER) program. PIER supports energy research and development that improves the quality of life in California by bringing environmentally safe, affordable, and reliable energy services and products to the marketplace.

Materials for Fast-Response Solid Oxide Fuel Cells (SOFCs)

The Problem	Among the most promising distributed power generating technologies are solid oxide fuel cells (SOFCs). SOFCs are an energy conversion technology that is clean, highly efficient and ideal for providing high quality power at small distributed sites. Critical challenges for SOFC commercialization are high cost and high risk of failure upon fast startup or shutoff. It is thus necessary to identify new, low-cost materials for the fuel cell membrane components, and to resolve engineering problems that may arise during rapid thermal cycling.
Proposed Research	The purpose of this project is to research the feasibility of using a specially formulated composite anode layer on the thin ceramic electrolyte film in a solid oxide fuel cell. The anode layer will be low cost and tuned to the thermal expansion coefficient of the ceramic electrolyte film to permit rapid thermal cycling.
Research Justification and Goals	Adds a project to the Commissions research portfolio that emphasizes innovative energy supply and end use technologies, focusing on their reliability, affordability, and environmental attributes as mandated by the Warren-Alquist Act by: • Demonstrating materials compatibility for alloy-supported membranes for at least 1000hrs. • Achieving a power density of at least 300 mW/cm2 (milliwatts per square centimeter). • Demonstrating resistance to performance degradation following 20 rapid thermal cycles between room temperature and 850 degrees Celsius. • Providing detailed cost calculations.
Contractor	University of California, Berkeley
PIER Manager	Alec F. Jenkins

This project is being conducted by the California Energy Commission's Public Interest Energy Research (PIER) program. PIER supports energy research and development that improves the quality of life in California by bringing environmentally safe, affordable, and reliable energy services and products to the marketplace.

Methane Sensor for Control and Automation

The Problem	Although renewable energy technologies have a wide variety of capital and operating costs, most renewables are not currently cost competitive in a deregulated electricity market. To be competitive, research and development is needed to lower capital costs, improve conversion efficiency, and reduce operation and maintenance costs in California's electricity market. Fact is, California has an abundance of renewable energy resources to generate "greenpower" which if not used would only escape into the atmosphere and contribute to global climate changes.
Proposed Research	The purpose of this project is to prove the technical feasibility of a new gas sensor to control and automate the collection of biogas and the operation of distributed power generators (e.g. micro-turbines and fuel cells). The sensor will contribute in achieving the competitiveness of biogas-to-electricity systems.
Research Justification and Goals	Adds a project to the Commissions research portfolio that effectively balances the risks, benefits, and time horizons for various activities and investments that will provide tangible benefits for California electricity ratepayers as mandated by the Warren-Alquist Act; and emphasizes innovative energy supply and end use technologies, focusing on their reliability, affordability, and environmental attributes as mandated by the Warren-Alquist Act by: • Maximizing fuel gas recovery efficiency and systems run time for electricity production. • Increasing the conversion efficiency of power generators. • Reducing current operation and maintenance costs. • Eliminating useless crew interventions to optimize the productivity of human capital assets. • Reducing scrutiny by determining a correlation between the quality of fuel gas and power output.
Contractor	Carthago International Solutions, Inc.
PIER Manager	Alec F. Jenkins

This project is being conducted by the California Energy Commission's Public Interest Energy Research (PIER) program. PIER supports energy research and development that improves the quality of life in California by bringing environmentally safe, affordable, and reliable energy services and products to the marketplace.

Microturbine Based Building Energy System

The Problem	Microturbines used in the production of electricity for California residences and commercial buildings operate at very low efficiencies (around 28%, fuel to power). The problem is to increase microturbine fuel efficiency without compromising the size and cost features of microturbines.
Proposed Research	The purpose of this research is to develop a building heating, cooling, and power system that will greatly increase the efficiency of the microturbines it employs from a peak of 85% efficiency to an average of 55% efficiency.
Research Justification and Goals	Adds a project to the Commissions research portfolio that emphasizes innovative energy supply and end use technologies, focusing on their reliability, affordability, and environmental attributes as mandated by the Warren-Alquist Act; and addresses key technical and scientific barriers as mandated by the Warren-Alquist Act by: • Developing microturbine systems that operate with much greater efficiency and therefore use less energy than conventional systems. • Reducing resultant power demand from central power plants by commercial buildings, especially during peak demand. • Reducing total energy costs by successful implementation of such systems. • Harnessing microturbine exhaust as a means to power cooling, space heating, and hot water heating systems.
Contractor	Nissen A. Jaffe
PIER Manager	Alec F. Jenkins

This project is being conducted by the California Energy Commission's Public Interest Energy Research (PIER) program. PIER supports energy research and development that improves the quality of life in California by bringing environmentally safe, affordable, and reliable energy services and products to the marketplace.

Modeling of Chemical Processes in Geothermal Reservoirs

The Problem	The generation of geothermal power is greatly affected by the chemical processes within the underground reservoir and more information is needed to understand these processes in order to improve geothermal economics and production.
Proposed Research	The purpose of this project is to evaluate the applicability of TOUGHREACT software in determining the composition of geothermal reservoirs thereby reducing the overall costs of geothermal power and decrease the environmental impact of geothermal power.
Research Justification and Goals	Adds a project to the Commissions research portfolio that addresses key technical and scientific barriers as mandated by the Warren-Alquist Act by: Configuring and testing TOUGHREACT: • To operate during injection of brine. • For operation in low pH fluid injection. • For long term gas production trends. • Use in chemically reactive tracers.
Contractor	GeothermEx, Inc.
PIER Manager	Alec F. Jenkins

This project is being conducted by the California Energy Commission's Public Interest Energy Research (PIER) program. PIER supports energy research and development that improves the quality of life in California by bringing environmentally safe, affordable, and reliable energy services and products to the marketplace.

Nanostructured Electrodes for PEM Fuel Cells

The Problem	Fuel cells are an important alternate source for clean and efficient generation of electricity. However, they can be costly to manufacture for reasons that include the use of platinum as the cell catalyst.
Proposed Research	The purpose of this project is to research the feasibility of using a carbon nanotube based electrode catalyst to significantly increase the utilization rate of platinum in the electrodes of proton exchange membrane (PEM) fuel cells. The increase of platinum utilization will lead to a reduction of platinum loading, and consequently a reduction of cost of PEM fuel cells.
Research Justification and Goals	Adds a project to the Commissions research portfolio that addresses key technical and scientific barriers as mandated by the Warren-Alquist Act by: • Demonstrating that multi wall carbon nanotube arrays with uniform diameter and with vertical alignment to the carbon fiber surface can be produced by catalyzed chemical vapor deposition on carbon paper or carbon cloth. • Demonstrating that catalyst nanoparticles (e.g., Pt) on the surface of carbon nanotubes can be deposited through electrodeposition. Targeting loading of 20-30% of the current ink process. • Generating triple-phase-boundary in the catalyst layer by impregnation of polymer electrolyte, development of membrane electrode array (MEA) and a single cell. • Targeting cost saving for the proposed fuel cell versus the conventional PEM fuel cell is 10-30% based on the saving of reduced Pt use.
Contractor	University of California, Riverside
PIER Manager	Alec F. Jenkins

This project is being conducted by the California Energy Commission's Public Interest Energy Research (PIER) program. PIER supports energy research and development that improves the quality of life in California by bringing environmentally safe, affordable, and reliable energy services and products to the marketplace.

New Generation Thermoelectric Materials for Power Generation and Refrigeration

The Problem	Thermoelectric power generators are produced by joining two thermoelectric materials with opposite charge carriers and applying heat to one side. These thermoelectric power generators have the advantage of long-term reliability since there are no moving parts. Thermoelectric materials have attracted attention because of their applications for solid state refrigeration and power generation. Widespread applications are currently limited because of low efficiency. Recent research has suggested that the efficiencies of these materials can be improved by quantum confinement, i.e. fabricating them in the form of one-dimensional nanowires.
Proposed Research	The purpose of this project is to research the feasibility of fabricating a thermoelectric material that will improve the conversion of thermal energy to electricity.
Research Justification and Goals	Adds a project to the Commissions research portfolio that effectively balances the risks, benefits, and time horizons for various activities and investments that will provide tangible benefits for California electricity ratepayers as mandated by the Warren-Alquist Act by: • Optimizing methodology for electrodeposition of CoSb3 in a porous alumina template. • Assessing the thermoelectric properties of a fabricated array of CoSb3 nanowires using electrodeposition.
Contractor	University of California, Berkeley
PIER Manager	Alec F. Jenkins

This project is being conducted by the California Energy Commission's Public Interest Energy Research (PIER) program. PIER supports energy research and development that improves the quality of life in California by bringing environmentally safe, affordable, and reliable energy services and products to the marketplace.

New Membranes Based on Ionic Liquids for High Temperature PEM Fuel Cells

The Problem	California can benefit from the electricity generated from clean fuel cell technologies. Current fuel cell technology has not performed adequately for commercial applications. New membranes with liquids that do not require water for proton conduction may accelerate the performance of PEM (Polymer Electrolye Membrane) fuel cells.
Proposed Research	The purpose of this project is to determine the feasibility of synthesizing proton-conducting membranes with liquids that do not require water for proton conduction to demonstrate accelerated performance of PEM fuel cells (Polymer Electrolye Membrane fuel cells are widely regarded as a promising technology for environmentally-preferred advanced power generation).
Research Justification and Goals	Adds a project to the Commissions research portfolio that has the potential to enhance the reliability, peaking power, and storage capabilities of renewable energy as mandated by the Warren-Alquist Act by: • Obtaining or synthesizing ionic liquids, acids and polymers. • Synthesizing membranes. • Characterizing proton conductivity, electrochemical stability window, stability against evaporation and dissolution by water vapor of the membranes at 150 degrees Celsius. • Fabricating membrane-electrode assemblies and carry out fuel cell tests at 150 degrees Celsius. • Conducting manufacturing cost analysis. • Confirming that projected cost of membranes is less than $100/m2 continues to be supported.
Contractor	Rutgers University
PIER Manager	Alec F. Jenkins

This project is being conducted by the California Energy Commission's Public Interest Energy Research (PIER) program. PIER supports energy research and development that improves the quality of life in California by bringing environmentally safe, affordable, and reliable energy services and products to the marketplace.

New Powerline Control Technology for Lighting and HVAC

The Problem	The owners and operators of existing commercial buildings do not have a low cost, reliable means to control lighting, heating, and air conditioning without rewiring entire buildings. This prohibitively expensive process is a major roadblock to reducing energy consumption through managing building loads.
Proposed Research	The purpose of this project is to determine the feasibility of using a new low-cost powerline communications strategy for electrical load control in commercial, industrial and institutional buildings. This project solves the control of lighting, heating, and air conditioning by using existing building wiring to send control signals to these load centers to help meet California's building energy efficiency goals.
Research Justification and Goals	Adds a project to the Commissions research portfolio that emphasizes innovative energy supply and end use technologies, focusing on their reliability, affordability, and environmental attributes as mandated by the Warren-Alquist Act by: • Fabricating at least 20 wired-in 3 phase power line communication analysis modules designed to capture the data required to assess the feasibility of utilizing this technology in targeted electrical environments of industrial, commercial, and institutional buildings. • Placing the analysis modules in a variety of locations (10-20 buildings) that are representative of the target environment and capture the noise, signal level and communications reliability data for a statistically valid sample. • Demonstrating that the technology communicates with a reliability level of at least 99% in the targeted electrical environments in a manner transparent to connected electrical/electronic equipment. • Proving that the communication efficiency target can be attained with two-way transmission/receiving circuitry that is in the projected cost range of $3-$5 per communication node.
Contractor	Powerline Control Sytems
PIER Manager	Alec F. Jenkins

This project is being conducted by the California Energy Commission's Public Interest Energy Research (PIER) program. PIER supports energy research and development that improves the quality of life in California by bringing environmentally safe, affordable, and reliable energy services and products to the marketplace.

Novel Approaches to Ignition Enhancement of Natural Gas Under Engine-Like Conditions

The Problem	Although natural gas is the most advantageous hydrocarbon fuel for environmentally preferred advanced generation in California, two challenges faced are the non-equilibrium processes encountered during lean burning that can result in incomplete combustion, and the difficulty in igniting fuel in power generation devices which can result in a reduction in overall performance.
Proposed Research	The purpose of this project is to determine the feasibility of a novel approach for improving natural gas ignition characteristics for conditions that are of relevance to power generation by internal combustion engines under lean-burning conditions.
Research Justification and Goals	Adds a project to the Commissions research portfolio that emphasizes innovative energy supply and end use technologies, focusing on their reliability, affordability, and environmental attributes as mandated by the Warren-Alquist Act; and supports California's goal to evaluate the net benefits of increasing the state's natural gas supply options, such as liquefied natural gas per the Energy Action Plan 2003 by: • Demonstrating that improved ignition characteristics will result by independently adding additives to lean pre-mixed natural gas. • Identifying a promising catalysts/reactor technology that is capable of obtaining a minimum 20% yield of the desired additives. • Displaying that the capital cost of adding the proposed technology to an internal combustion engine is cost effective.
Contractor	University of Southern California
PIER Manager	Alec F. Jenkins

This project is being conducted by the California Energy Commission's Public Interest Energy Research (PIER) program. PIER supports energy research and development that improves the quality of life in California by bringing environmentally safe, affordable, and reliable energy services and products to the marketplace.

Novel Nanocomposite Carbon Molecular Sieve (CMS) Membranes

The Problem	An environmentally sound energy future depends in part upon being able to separate mixed gases into component species. A molecular sieve may be able to separate the carbon dioxide and hydrogen from the methane obtained from gas wells and gasified coal. The carbon dioxide (a greenhouse gas) would then be available for sequestration and the hydrogen available for fuel cells.
Proposed Research	The purpose of this project is to demonstrate the feasibility of fabricating and then utilizing novel nanocomposite mixed matrix membranes for separating out hydrogen (H2) and carbon dioxide (CO2) from binary, ternary, and quaternary gas mixtures of relevance to power generation. These membranes are thought to combine the advantages of polymeric membranes (cheap, easily processed) with the advantages of the molecular sieve membranes (superior separation characteristics). It is believed that these membranes will show superior performance in the various power/energy generation related applications.
Research Justification and Goals	Adds a project to the Commissions research portfolio that addresses key technical and scientific barriers as mandated by the Warren-Alquist Act by: • Fabricating subscale prototype composite mixed matrix membranes for H2 and CO2 separation. • Demonstrating that the prototype membranes are capable of separating H2 and CO2 into select binary, ternary, and quaternary mixtures, also containing CO as one of the components. • Demonstrating the ability to produce composite mixed matrix membranes.
Contractor	University of Southern California
PIER Manager	Alec F. Jenkins

This project is being conducted by the California Energy Commission's Public Interest Energy Research (PIER) program. PIER supports energy research and development that improves the quality of life in California by bringing environmentally safe, affordable, and reliable energy services and products to the marketplace.

Plastic Solar Cell

The Problem	California's energy prices are constantly rising. As a step towards increased energy security and cleaner air, future electricity generation will be based on renewable resources. The solar resource is good in California and its availability coincides well with load. The development of a less expensive technology for direct solar-electric power generation is needed.
Proposed Research	The purpose of this project is to determine the feasibility of developing stable, low-cost solar modules made with nano-structured, self-assembled mesopourous templates.
Research Justification and Goals	Adds a project to the Commissions research portfolio that has the potential to enhance the reliability, peaking power, and storage capabilities of renewable energy as mandated by the Warren-Alquist Act; and supports California's goal to meet new generation needs first by renewable energy resources and distributed generation per the Energy Action Plan 2003 by: • Fabricating a prototype bench scale nano-structured photovoltaic cell. • Demonstrating the capability to produce a uniform nanostructured film. • Demonstrating polychromatic conversion efficiency. • Demonstrating opto-electronic stability. • Confirming that estimated costs projections were supported.
Contractor	Nanosolar
PIER Manager	Alec F. Jenkins

This project is being conducted by the California Energy Commission's Public Interest Energy Research (PIER) program. PIER supports energy research and development that improves the quality of life in California by bringing environmentally safe, affordable, and reliable energy services and products to the marketplace.

Plug-in Photovoltaic Receiver for Concentrator Applications

The Problem	The California climate holds great potential for solar energy generation in residential, commercial and residential applications. However, conventional PV technology carries with it the stigma that it is not cost efficient, largely due to the high costs of traditional PV panels fabricated from silicon.
Proposed Research	The purpose of this project is to determine the feasibility of fabricating low-cost concentrators made from plastic to increase energy output by 40% to 60% per of photovoltaic cell.
Research Justification and Goals	Adds a project to the Commissions research portfolio that emphasizes innovative energy supply and end use technologies, focusing on their reliability, affordability, and environmental attributes as mandated by the Warren-Alquist Act by: • Proving the feasibility of a standardized plug-in receiver concept by designing, building, and testing a prototype. • Developing a prototype plug-in concentrator PV receiver module. • Designing a process for device fabrication. • Assessing design feasibility based on prototype performance testing.
Contractor	SunPower Corporation
PIER Manager	Alec F. Jenkins

This project is being conducted by the California Energy Commission's Public Interest Energy Research (PIER) program. PIER supports energy research and development that improves the quality of life in California by bringing environmentally safe, affordable, and reliable energy services and products to the marketplace.

Pressure Reducing Valve Turbine

The Problem	California has benefited from electricity generated from hydropower and its ability to be utilized when most needed. Further cost reduction and efficiency gains in turbine technologies will bring additional benefits to California.
Proposed Research	The purpose of this project is to determine the feasibility of developing a cost effective methodology for recovering the power dissipated in pressure reducing valves (PRV) commonly used in water systems.
Research Justification and Goals	Adds a project to the Commissions research portfolio that has the potential to enhance the reliability, peaking power, and storage capabilities of renewable energy as mandated by the Warren-Alquist Act by: • Designing a test facility and test plan to use for measurement and verification of the PRV (Pressure Reducing Valves) turbines performance. • Fabricating a full-scale prototype device. • Conducting a manufacturing cost analysis. A target of $350 per kWh is presumed. • Conducting a life cycle cost analysis. The target is less than $0.03/kWh. • Designing a pressure chamber for the turbine to use in the building of the PRV (Pressure Reducing Valves) turbine.
Contractor	SOAR Technologies, Inc.
PIER Manager	Alec F. Jenkins

This project is being conducted by the California Energy Commission's Public Interest Energy Research (PIER) program. PIER supports energy research and development that improves the quality of life in California by bringing environmentally safe, affordable, and reliable energy services and products to the marketplace.

Printed Photovoltaic Images for Roofing

The Problem	California can benefit from electricity generated from clean renewable photovoltaic (PV) technologies. Current PV systems are not cost competitive and pose architectural challenges.
Proposed Research	The purpose of this project is to determine the feasibility of imaging traditional roof top patterns in a dye sensitized titania photovoltaic module array by means of a printing technology while maintaining high performance and cost reduction.
Research Justification and Goals	Adds a project to the Commissions research portfolio that emphasizes innovative energy supply and end use technologies, focusing on their reliability, affordability, and environmental attributes as mandated by the Warren-Alquist Act by: • Determining color space requirements for rooftop applications. • Testing dye color, solubility, fading, and thermal stability. • Realizing low manufacturing cost utilizing dyes with no toxicity. • Developing dye formulation compatible with inkjet printer. • Developing digital file of roofing material images. • Demonstrating high speed printing. • Testing performance of 5% module efficiency and stability of 1000 hours at 85 degrees C. • Confirming system cost of $3/watt.
Contractor	Konarka Technologies, Inc.
PIER Manager	Alec F. Jenkins

This project is being conducted by the California Energy Commission's Public Interest Energy Research (PIER) program. PIER supports energy research and development that improves the quality of life in California by bringing environmentally safe, affordable, and reliable energy services and products to the marketplace.

Prototype and Demonstration of a Light Emitting Diode (LED) Alternative to Screwbase Incandescent Lamps

The Problem	Lighting consumes a significant fraction of the nation's electric energy. Residential and commercial lighting account respectively for 8%-15% and 20%-40% of the nation's total electric output. State and national agencies have directed considerable effort toward limiting the use of high-wattage lighting and encouraging the development of lower-wattage technologies. U.S. Department of Energy studies forecast that the use of solid-state lighting devices, including light-emitting diodes (LED), could save the U.S. $128.6 billion dollars between 2010 and 2025, with the largest savings realized in commercial (72%) and residential (10%) buildings.
Proposed Research	The purpose of this project is to research the feasibility of constructing a light emitting diode (LED) lamp with a conventional screwbase and color control capability that could be used in existing incandescent light fixtures. Prototype LED lamps will be constructed.
Research Justification and Goals	Adds a project to the Commissions research portfolio that emphasizes innovative energy supply and end use technologies, focusing on their reliability, affordability, and environmental attributes as mandated by the Warren-Alquist Act by: • Specifying and building one or two engineering prototypes of an LED lamp based on U.S. Patent 6,149,283. • Measuring and analyzing the performance of the prototype lamp(s), comparing the performance of the lamp(s) to conventional lamps, in terms of energy demand reduction, options for controls, and light output characteristics. • Developing specifications for mass production of the LED lamp, including components, performance parameters, quantities, and targeted costs of production.
Contractor	Conway & Silver, Energy Associates LLC
PIER Manager	Alec F. Jenkins

This project is being conducted by the California Energy Commission's Public Interest Energy Research (PIER) program. PIER supports energy research and development that improves the quality of life in California by bringing environmentally safe, affordable, and reliable energy services and products to the marketplace.

Prototype and Demonstration of Vision-Tuned Fluorescent Lamps

The Problem	Lighting is responsible for twenty-two percent of the energy consumption in all building types, and twenty-six percent of the energy consumption in commercial buildings. Vision science has significantly advanced mankind's understanding of visual processes yet these advances have not been fully applied to the design of electric light sources. Consequently, the spectral output of electric light sources is not optimized for the human visual system. A significant opportunity exists to optimize light source spectra, which will lead to better vision with the minimum expenditure of energy.
Proposed Research	The purpose of this project is to demonstrate the feasibility of developing more energy efficient fluorescent lamps in which a greater percentage of the radiant energy is used to produce light that is optimized for human vision.
Research Justification and Goals	Adds a project to the Commissions research portfolio that effectively balances the risks, benefits, and time horizons for various activities and investments that will provide tangible benefits for California electricity ratepayers as mandated by the Warren-Alquist Act by: • Fabricating a minimum of four different types of prototype lamps, varying in the degree that they elicit a response from the human visual system. • Testing the visual performance with expers and non experts. • Demonstrating an energy savings of 20% or greater.
Contractor	University of Nebraska, Lincoln
PIER Manager	Alec F. Jenkins

This project is being conducted by the California Energy Commission's Public Interest Energy Research (PIER) program. PIER supports energy research and development that improves the quality of life in California by bringing environmentally safe, affordable, and reliable energy services and products to the marketplace.

Pulsed Ultrasound Water Treatment

The Problem	By the year 2006 livestock operations will be mandated to register their water treatment process. If chlorine and other chemicals will be restricted in use, the ultraviolet approach that consumes substantial energy is currently the only alternative.
Proposed Research	The purpose of this project is to determine the feasibility of using high intensity, pulsed ultrasound to treat municipal water or other industrial or agricultural wastewater before discharging it into rivers.
Research Justification and Goals	Adds a project to the Commissions research portfolio that addresses key technical and scientific barriers as mandated by the Warren-Alquist Act by: • Fabricating two ultrasonic transducers. • Building a laboratory prototype water processor. • Assembling the system. • Selecting and acquiring contaminates. • Demonstrating that the pulsed ultrasound water treatment is capable of reducing concentration to less than 2 per ml. • Demonstrating that targeted purification can be achieved at an energy consumption of less than 20 kWh/acre-ft of waste water, a 12% reduction over existing UV and 60% reduction over ozone treatment.
Contractor	Sonipulse, Inc.
PIER Manager	Alec F. Jenkins

This project is being conducted by the California Energy Commission's Public Interest Energy Research (PIER) program. PIER supports energy research and development that improves the quality of life in California by bringing environmentally safe, affordable, and reliable energy services and products to the marketplace.

Quantitative Building Cooling of Tile Roofs Coated with Solar IR Reflective Coatings

The Problem	While flat sloped roofs lend themselves to an easy switch from black to white and subsequent energy savings, steep pitched roofs are more problematic, especially regarding color choice. Aesthetically pleasing colors are important because the roof is about 50% of what one sees from the curb and darker colors are often the choice of a homeowner.
Proposed Research	The purpose of this project is to research the feasibility of new infrared reflecting architectural coatings for on-site application to steep-pitched concrete or clay tile roofs for the purpose of (1) improving a home's appearance, and (2) also reducing its consumption of energy by achieving a minimum 40% solar reflectance.
Research Justification and Goals	Adds a project to the Commissions research portfolio that emphasizes innovative energy supply and end use technologies, focusing on their reliability, affordability, and environmental attributes as mandated by the Warren-Alquist Act by: • Fabricating 12 model buildings to test 5 different color formulations of experimental tile coatings and establish an appropriate test site. • Demonstrating a minimum reflectance of 40% for each color tested. • Achieving an application cost of $1.25-$1.50 per square foot that includes coating cost and application. • Demonstrating a 10-20% reduction in deck temperature with new coatings.
Contractor	American Rooftile Coatings
PIER Manager	Alec F. Jenkins

This project is being conducted by the California Energy Commission's Public Interest Energy Research (PIER) program. PIER supports energy research and development that improves the quality of life in California by bringing environmentally safe, affordable, and reliable energy services and products to the marketplace.

Radio Frequency Electrostatic Ignition System Feasibility Demonstration

The Problem	Natural gas distribution systems require repressurizing along distribution pipelines to offset pressure drops. Nitrogen oxides (NOx) are among the emission products produced by the reciprocating natural gas engines that drive the distributed repressurizing pumps. NOx emissions can be reduced by replacing the spark ignition systems used in these engines by employing a more effective ignition mechanism such as a radio frequency corona discharge ignition system.
Proposed Research	The purpose of this project is to research the feasibility of using a new Radio Frequency Electrostatic Ignition System to reduce nitrogen oxides (NOx) emissions in natural gas fueled reciprocating engines. Engine performance data to be recorded will include combustion characteristics, knock margin, fuel efficiency, and exhaust emissions. This operational test will also produce valuable mechanical and thermal data so that prototypes for field tests can be designed.
Research Justification and Goals	Adds a project to the Commissions research portfolio that emphasizes innovative energy supply and end use technologies, focusing on their reliability, affordability, and environmental attributes as mandated by the Warren-Alquist Act by: • Designing the RFEIS (radio frequency electrostatic ignition system). • Designing and optimizing radio frequency electrostatic ignition system discharge and combustion characteristics using finite element modeling and combustion bomb testing. • Demonstrating at least 12 hours of durability of the RFEIS (radio frequency electrostatic ignition system) in a hot firing test engine. • Demonstrating emissions with RFEIS in a single cylinder engine. • Demonstrating stable engine operation at 90% of the lean limit. • Testing a standard ignition system in a single cylinder engine and compare with RFEIS. • Verifying that data gathered supports the ignition system's projected capital cost of $8/kWe and life cycle cost of $0.25/MWe-hr.
Contractor	Eta Tech, Inc.
PIER Manager	Alec F. Jenkins

This project is being conducted by the California Energy Commission's Public Interest Energy Research (PIER) program. PIER supports energy research and development that improves the quality of life in California by bringing environmentally safe, affordable, and reliable energy services and products to the marketplace.

Real Time Energy Meter Radio Frequency Communications System

The Problem	Real Time Energy Meters (RTEM) allow utilities to establish an hourly rate structure that discourages usage during more expensive peak usage periods. Leveling peak usage reduces the need for less environmentally friendly generators. It also provides a significant savings to residential customers. Because of the large number of residential users the RTEM should be: (1) Cost competitive with existing electro-mechanical meters and, (2) Provide read-out flexibility for manual or automatic data retrieval. In order to fully exploit the benefits of the RTEM, it will be necessary to have real time communications between the individual meters and the utility.
Proposed Research	The purpose of this project is to determine the operational feasibility and advantages of using narrowband VHF communications with selectable relay control to transfer electric meter data.
Research Justification and Goals	Adds a project to the Commissions research portfolio that effectively balances the risks, benefits, and time horizons for various activities and investments that will provide tangible benefits for California electricity ratepayers as mandated by the Warren-Alquist Act by: • Developing a real time electronic meter with radio frequency communications capability. • Demonstrating 100% data transfers, 30minute interval data accumulation, 40 day data storage capability, 1200-baud transmission rate, and 10 mile transmission/reception range. • Demonstrating a meter price of $80 or less.
Contractor	BCD Electronics, LLC.
PIER Manager	Alec F. Jenkins

This project is being conducted by the California Energy Commission's Public Interest Energy Research (PIER) program. PIER supports energy research and development that improves the quality of life in California by bringing environmentally safe, affordable, and reliable energy services and products to the marketplace.

Reduced Cost Power Electronic Converter for Generator Applications

The Problem	Although wind power promises clean energy, there are still energy efficiency issues in converting the power of the wind into usable electricity.
Proposed Research	The purpose of this project is to research the feasibility of developing a more efficient and lower cost power-electronic converter for use in variable speed electrical generation applications such as wind and water turbines or gas microturbines, in the hopes of increasing efficiency and energy output.
Research Justification and Goals	Adds a project to the Commissions research portfolio that addresses key technical and scientific barriers as mandated by the Warren-Alquist Act by: • Reducing the number of power switching devices by half. • Developing a new modulation algorithm that takes advantage of common, but usually neglected filtering properties of the induction machine. • Configuring a simple filter topology to capture the energy produced by the system. • Assessing feasibility based on prototype performance testing.
Contractor	University of Idaho
PIER Manager	Alec F. Jenkins

This project is being conducted by the California Energy Commission's Public Interest Energy Research (PIER) program. PIER supports energy research and development that improves the quality of life in California by bringing environmentally safe, affordable, and reliable energy services and products to the marketplace.

Research Energy Efficient Designs for Swimming Pool Pump Systems

The Problem	In the state of California, many private residences, school systems and other institutions maintain swimming pools. A large user of electricity for heating and pumping, oftentimes pools' pumps, used to filter water for purification, waste energy by being operated at levels that are much higher than is necessary to safeguard against bacterial or microbiotic contamination.
Proposed Research	The purpose of this project is to determine whether pool owners may reduce the flow rate and overall number of hours the pump operates in order to produce energy savings without comprising the water quality inside the pool.
Research Justification and Goals	Adds a project to the Commissions research portfolio that emphasizes innovative energy supply and end use technologies, focusing on their reliability, affordability, and environmental attributes as mandated by the Warren-Alquist Act by: • Determining the feasibility of reducing the flow rate of the filter pumps on commercial and educational swimming pools while maintaining the required water quality. • Performing testing to determine optimal design conditions for reducing flow rates for a swimming pool filtration system. • Implementing filtration design on two actual pools and performing water quality testing therein.
Contractor	ADM Associates, Inc.
PIER Manager	Alec F. Jenkins

This project is being conducted by the California Energy Commission's Public Interest Energy Research (PIER) program. PIER supports energy research and development that improves the quality of life in California by bringing environmentally safe, affordable, and reliable energy services and products to the marketplace.

Research on Manufacturing Quadruple-Junction Solar Cells

The Problem	Quadruple-junction solar cells show great potential for achieving terrestrial conversion efficiencies above 40%. At these levels, the photovoltaic devices could be competitive for large-scale electric power generation. A sophisticated chemical process known as metalorganic chemical vapor deposition (MOCVD) produces these complex cells. The feasibility of a new deposition process needs to be determined for the fabrication of quadruple-junction solar cells with light conversion efficiencies exceeding 40 percent.
Proposed Research	The purpose of this project is to research the feasibility of increasing the conversion efficiency of quadruple-junction solar cells by optimizing the chemical vapor deposition process.
Research Justification and Goals	Adds a project to the Commissions research portfolio that emphasizes innovative energy supply and end use technologies, focusing on their reliability, affordability, and environmental attributes as mandated by the Warren-Alquist Act by: • Developing a metalorganic chemical vapor deposition process for fabricating quadruple-junction solar cells with targeted efficiencies over 40%. • Achieving a high degree of crystal quality with sharp interfaces and precise composition profiles. • Producing the specified lattice-matched films with the desired bandgap of 1.05 eV.
Contractor	University of California, Los Angeles
PIER Manager	Alec F. Jenkins

This project is being conducted by the California Energy Commission's Public Interest Energy Research (PIER) program. PIER supports energy research and development that improves the quality of life in California by bringing environmentally safe, affordable, and reliable energy services and products to the marketplace.

Sealing and Contacting to Novel Integrated Solid Oxide Fuel Cells

The Problem	California ratepayers would benefit significantly from an improved fuel cell technology that can reduce environmental impacts, increase reliability, and increase affordability.
Proposed Research	The purpose of this project is to determine the feasibility of using metal brazing alloys for sealing electrical contacts to solid oxide fuel cell stacks for increased electricity generation.
Research Justification and Goals	Adds a project to the Commissions research portfolio that emphasizes innovative energy supply and end use technologies, focusing on their reliability, affordability, and environmental attributes as mandated by the Warren-Alquist Act by: • Demonstrating metal braze seals that exhibit high strength and low gas leakage rates. • Demonstrating low-resistance contacting to the fuel cell stacks using the metal braze materials. • Fabricating complete integrated solid oxide fuel cell stacks using metal brazing for sealing and contacting. • Demonstrating good stack performance.
Contractor	Northwestern University
PIER Manager	Alec F. Jenkins

This project is being conducted by the California Energy Commission's Public Interest Energy Research (PIER) program. PIER supports energy research and development that improves the quality of life in California by bringing environmentally safe, affordable, and reliable energy services and products to the marketplace.

Self-Optimized Controllers for Air Conditioners

The Problem	Peak demand for air conditioning in certain areas of California has put severe strains on the reserve capacity of the system.
Proposed Research	The purpose of this project is to determine the feasibility of developing a low-cost self-optimizing controller for single-phase air conditioners that reduces electrical consumption by 20% in a retrofit configuration. Unlike the situation with the design of new units, old air conditioners' component performance characteristics and system behavior are not well defined. The proposed self-optimizing controller should overcome this obstacle and operate these older air conditioners at optimum efficiency.
Research Justification and Goals	Adds a project to the Commissions research portfolio that emphasizes innovative energy supply and end use technologies, focusing on their reliability, affordability, and environmental attributes as mandated by the Warren-Alquist Act by: • Demonstrating that the proposed air conditioner controller can be used to retrofit existing air conditioning systems. • Demonstrating that the proposed air conditioner controller is capable of driving the fan motors and compressor motors at different frequencies at the same time. • Demonstrating that the proposed air conditioner controller is capable of operating the compressor at two speeds. • Demonstrating that the proposed air conditioner controller is capable of operating the fan/blower with continuous variation of speeds. • Demonstrating that the proposed air conditioner controller is capable of accurately calculating in real time the Energy Performance Index (EPI). • Demonstrating that the proposed air conditioner controller is capable of improving the energy efficiency by at least 20% in a retrofit configuration. • Confirming that the projected manufacturing cost of $90 and installation cost of $30 for the controller can be supported.
Contractor	Energy Savers International
PIER Manager	Alec F. Jenkins

This project is being conducted by the California Energy Commission's Public Interest Energy Research (PIER) program. PIER supports energy research and development that improves the quality of life in California by bringing environmentally safe, affordable, and reliable energy services and products to the marketplace.

Single Crystal Silicon Sheet Growth

The Problem	The cost of solar generation remains out of the reach of many markets. The problem may be addressed by increasing the production rate of 35 cm/min up to a maximum of 350 cm/min using an advanced horizontal ribbon growth (HRG) method.
Proposed Research	The purpose of this project is to research the feasibility of producing single crystal sheets of semiconductor quality silicon directly from a polycrystalline source at a minimum production rate of 35 cm/min up to a maximum of 350 cm/min using an advanced horizontal ribbon growth (HRG) method.
Research Justification and Goals	Adds a project to the Commissions research portfolio that addresses key technical and scientific barriers as mandated by the Warren-Alquist Act by: • Assembling a working process chamber to achieve the desired crystal growth. • Developing process controls to realize the desired growth process. • Implementing computer monitoring and control of the process to handle the multiplicity of sensors and control precision. • Initiating silicon sheet production. • Establishing the failure modes of the processor.
Contractor	Energy Materials Research
PIER Manager	Alec F. Jenkins

This project is being conducted by the California Energy Commission's Public Interest Energy Research (PIER) program. PIER supports energy research and development that improves the quality of life in California by bringing environmentally safe, affordable, and reliable energy services and products to the marketplace.

Solid State Electrolyte for Dye-Sensitized Solar Cells (DSSCs)

The Problem	The state of California is uniquely positioned to harvest much of its energy from the sun. However, conventional photovoltaic systems are not yet cost-efficient. By utilizing lower cost materials in the production of thin-film PV systems, solar power could be made more cost-effective and therefore more widely-available to commercial and residential power users.
Proposed Research	The purpose of this project is to research the feasibility of using a specially formulated gel as an electrolyte in dye-sensitized solar cells (DSSCs) that permits effective encapsulation in the manufacturing process, thereby lowering manufacturing costs and improving performance.
Research Justification and Goals	Adds a project to the Commissions research portfolio that addresses key technical and scientific barriers as mandated by the Warren-Alquist Act by: • Developing an electrolyte gel that can be transitioned from a liquid to a solid at temperatures ranging from 40-90ºC, without compromising its performance. • Fabricating and testing prototype solar cells. • Reducing the manufacturing cost of solar cells to less than $1/ per peak watt (Wp) through low cost materials and roll-to-roll manufacturing. • Expanding the cost-effective applications of PV in California with low cost thin film PV.
Contractor	Konarka Technologies, Inc.
PIER Manager	Alec F. Jenkins

This project is being conducted by the California Energy Commission's Public Interest Energy Research (PIER) program. PIER supports energy research and development that improves the quality of life in California by bringing environmentally safe, affordable, and reliable energy services and products to the marketplace.

Steady State Security Assessment of Deregulated Power Systems

The Problem	In the state of California, bulk transmission networks are frequently subjected to contingencies that can alter the operating state of the network and jeopardize the reliability of the network. Assessment of the post-disturbance state of a system in order to assess network security and/or take corrective actions is of prime importance to eliminate the potential for blackouts and overload.
Proposed Research	The purpose of this project is to demonstrate the feasibility of a computational strategy for rapidly assessing the state of the transmission network following possible system contingencies, and to determine post-contingency power flow, bus voltages and loading margins.
Research Justification and Goals	Adds a project to the Commissions research portfolio that addresses key technical and scientific barriers as mandated by the Warren-Alquist Act by: • Developing a method for fast determination of the proximity of the operating point of instability, following increased loading conditions, using a voltage instability indicator. • Assessing the impact of line outages on the loading margin of the network and the real and reactive power flow over the network. • Developing distribution factors to quantify the impact of bilateral transactions, on the power flow (real and reactive) bus voltages and transmission losses over the network.
Contractor	Clemson University
PIER Manager	Alec F. Jenkins

This project is being conducted by the California Energy Commission's Public Interest Energy Research (PIER) program. PIER supports energy research and development that improves the quality of life in California by bringing environmentally safe, affordable, and reliable energy services and products to the marketplace.

Test and Evaluation of Heat Transfer Parameters for CAES Tank System

The Problem	California can benefit from storage technologies that provide energy when the demand is highest and the supply is most constrained. Currently, most storage technologies are not cost competitive and/or reliable. A major effort in California has been the development of energy storage systems such as the thick steel walled storage tank of the T-CAES (Compressed Air Energy Storage System) which needs to be proven reliable and cost effective.
Proposed Research	The purpose of this project is to determine the feasibility of using a thick steel walled storage tank of the T-CAES (Compressed Air Energy Storage System) in the production of electrical power.
Research Justification and Goals	Adds a project to the Commissions research portfolio that addresses key technical and scientific barriers as mandated by the Warren-Alquist Act by: • Studying the thermal inertia of the storage tank, control valve and downstream piping. • Studying the heating of compressed air that feeds the system in cold climates. • Conducting 12 storage tank, control valve and downstream piping tests. • Obtaining heat transfer coefficients for the compressed air storage tank during the filling, quiescent and exhaust periods. • Confirming the cost benefits of using "peak shaving" in applications to an office building, a food processing plant, and an industrial plant. • Demonstrating the operation of the system in conjunction with a wind farm operation.
Contractor	Lieberman Research Associates
PIER Manager	Alec F. Jenkins

This project is being conducted by the California Energy Commission's Public Interest Energy Research (PIER) program. PIER supports energy research and development that improves the quality of life in California by bringing environmentally safe, affordable, and reliable energy services and products to the marketplace.

Test Program for High Efficiency Turbine Diffuser

The Problem	The installation of flow improvement devices in combustion exhausts needs to be tested to determine if it will result in more power generated using less fuel, which will result in energy savings for California ratepayers.
Proposed Research	The purpose of this project is to determine the feasibility of increasing combustion turbine efficiency and power by one percent in most turbines with a right angle bend and by two percent in an older turbine model that is now being remanufactured and installed for peaking purposes. Fuel use is not increased.
Research Justification and Goals	Adds a project to the Commissions research portfolio that addresses key technical and scientific barriers as mandated by the Warren-Alquist Act by: • Fabricating a prototype of the proposed turbine diffuser. • Demonstrating that the prototype diffuser is capable of reducing backpressure by 6.7 inches of water to result in a 1% increase in turbine efficiency.
Contractor	Consultants in Engineering Acoustics
PIER Manager	Alec F. Jenkins

This project is being conducted by the California Energy Commission's Public Interest Energy Research (PIER) program. PIER supports energy research and development that improves the quality of life in California by bringing environmentally safe, affordable, and reliable energy services and products to the marketplace.

The DaySwitch

The Problem	Energy used for lighting in commercial buildings in California can be reduced if an automated technology can be developed that can be installed in existing light fixtures and then turn off lights when sufficient daylight becomes available.
Proposed Research	The purpose of this research is to determine the feasibility of developing an inexpensive, easy to install, self-commissioning photosensor device called "DaySwitch" that will clip into existing lighting fixtures to allow them to automatically shut off lights when sufficient daylight is available in a space.
Research Justification and Goals	Adds a project to the Commissions research portfolio that emphasizes innovative energy supply and end use technologies, focusing on their reliability, affordability, and environmental attributes as mandated by the Warren-Alquist Act by: • Developing a DaySwitch design that uses readily available components, is easy to manufacture, and has a total component cost of less than $6. • Demonstrating the operation of all components under a wide range of possible operating conditions. • Demonstrating the ability to install the DaySwitch within 15 minutes of opening the ballast/lamp channel. • Demonstrating the DaySwitch's compatibility with most common types of lamps. • Demonstrating the successful operation of the DaySwitch and a connected luminaire in response to a number of different daylighting conditions. • Presenting the DaySwitch and test results to at least one potential manufacturer.
Contractor	Rensselaer Lighting Research Center
PIER Manager	Alec F. Jenkins

This project is being conducted by the California Energy Commission's Public Interest Energy Research (PIER) program. PIER supports energy research and development that improves the quality of life in California by bringing environmentally safe, affordable, and reliable energy services and products to the marketplace.

The Mamikon Spinner

The Problem	California can benefit from clean, renewable electricity generated by wind turbine technology. A reduction in cost will make wind turbines a more cost competitive alternative to traditional non-renewable electricity generation. A more efficient blade design for small wind turbines may be a good alternative.
Proposed Research	The purpose of this project is to determine the feasibility of fabricating a more efficient blade design for small wind turbines. The new design is a single continuous ribbon shaped into a spinner with spokes to a central hub.
Research Justification and Goals	Adds a project to the Commissions research portfolio that has the potential to enhance the reliability, peaking power, and storage capabilities of renewable energy as mandated by the Warren-Alquist Act by: • Finalizing prototype design. • Building a numeric modeling plan. • Demonstrating with computational fluid dynamics testing a 7-14% advantage of Spinner over standard blade with CFD software. • Fabricating first composite prototype and testing it in a wind tunnel. Demonstrate a minimum 7% advantage. • Fabricating second composite prototype. • Demonstrating that the proposed turbine design is preferred by survey of 100 consumers. • Performing manufacturing cost analysis. Confirming spinner manufacturing cost advantage of 15-20% less than standard blades continues to be supported. • Performing life cycle cost analysis. • Proving that the innovation can generate 7-14% advantage over the standard blade, reducing current cost per kWh from 9 cents to 8 cents.
Contractor	Hi-Q Products, Inc.
PIER Manager	Alec F. Jenkins

This project is being conducted by the California Energy Commission's Public Interest Energy Research (PIER) program. PIER supports energy research and development that improves the quality of life in California by bringing environmentally safe, affordable, and reliable energy services and products to the marketplace.

The Sagebien Project

The Problem	Hydropower turbines were developed in the late 19th century without considering their effects on the environment. Turbines and their associated diversion dams form direct barriers to fish migration up and down stream causing mortality and morbidity of species that pass them. Common low head diversion dams are open channel flows. Water wheels allow fish to pass effortlessly down stream, but challenge fish moving upstream except during floods. There is a need for modification of water wheels to allow fish to pass both ways and still efficiently generate hydropower.
Proposed Research	The purpose of this project is to research the feasibility of developing an undershoot water wheel modified to allow for fish passage.
Research Justification and Goals	Adds a project to the Commissions research portfolio that effectively balances the risks, benefits, and time horizons for various activities and investments that will provide tangible benefits for California electricity ratepayers as mandated by the Warren-Alquist Act by: • Designing a wheel that will allow fish passage without injury. • Demonstrating a 70-80% hydraulic efficiency. • Demonstrating design will allow 50% of fish traveling upstream and 98% traveling downstream to proceed without injury. • Comparing lifecycle costs.
Contractor	Davis Hydro
PIER Manager	Alec F. Jenkins

This project is being conducted by the California Energy Commission's Public Interest Energy Research (PIER) program. PIER supports energy research and development that improves the quality of life in California by bringing environmentally safe, affordable, and reliable energy services and products to the marketplace.

The Use of Solid Oxide Membranes in Power Generation Applications

The Problem	There may the opportunity to use the waste heat in the exhaust stacks of power generating equipment to decompose carbon dioxide (CO2) through the use of solid oxide membranes and to then mix the decomposed elements (carbon monoxide (CO) and oxygen (O2)) into the fuel stream to augment combustion thereby increasing thermal efficiency.
Proposed Research	The purpose of this project is to evaluate the technical feasibility of using the waste heat in the exhaust stacks of power generating equipment to decompose carbon dioxide (CO2) through the use of solid oxide membranes and to then mix the decomposed elements (carbon monoxide (CO) and oxygen (O2)) into the fuel stream to augment combustion thereby increasing thermal efficiency.
Research Justification and Goals	Adds a project to the Commissions research portfolio that emphasizes innovative energy supply and end use technologies, focusing on their reliability, affordability, and environmental attributes as mandated by the Warren-Alquist Act by: • Demonstrating the feasibility of producing synthesis gas from methane, natural gas, acidic natural gas, and sour gases by a catalytic reforming reactor step. • Developing low-cost catalysts capable of achieving conversions in a one-reaction reactor step. • Achieving improved methane-conversion efficiencies in the reactor (70-100%) and syngas product yields up to 100% for the combined carbon monoxide and carbon dioxide products. • Integrating the reactor and process with a hydrogen-driven fuel-cell system and with a methanol reactor. • Deriving related end-product costs.
Contractor	University of Southern California
PIER Manager	Alec F. Jenkins

This project is being conducted by the California Energy Commission's Public Interest Energy Research (PIER) program. PIER supports energy research and development that improves the quality of life in California by bringing environmentally safe, affordable, and reliable energy services and products to the marketplace.

Ultra Reduced Emissions Burner for GTCC and CHP Applications

The Problem	Highly efficient Gas Turbine Combined Cycle (GTCC) systems will be the preferred method of generating electricity in California. However, GTCC systems must employ post combustion NOx control equipment, such as Selective Catalytic Reduction (SCR), to meet regulated NOx limits. If ultralow NOx burners could be developed for gas turbine and duct burners, SCR costs could be reduced or even eliminated.
Proposed Research	The purpose of this project is to research the feasibility of a duct burner design for gas-turbine combined-cycle systems that can divide the flame into several zones thereby allowing better control of flame stability, flame quality, CO emissions and NOx emissions.
Research Justification and Goals	Adds a project to the Commissions research portfolio that emphasizes innovative energy supply and end use technologies, focusing on their reliability, affordability, and environmental attributes as mandated by the Warren-Alquist Act by: • Demonstrating a cost reduction of over 90% relative to current state of the art on a dollars per tons NOx removed basis. • Achieving a NOx level of less than 2 ppmvd at 15% O2. • Achieving a CO level of under 6 ppm at 15% O2. • Demonstrating stable and low noise combustion. • Demonstrating a turndown of 4 to 1.
Contractor	Altex Technologies Corporation
PIER Manager	Alec F. Jenkins

This project is being conducted by the California Energy Commission's Public Interest Energy Research (PIER) program. PIER supports energy research and development that improves the quality of life in California by bringing environmentally safe, affordable, and reliable energy services and products to the marketplace.

Unified Power Quality Conditioner Using One-Cycle Control

The Problem	In recent years, many issues have come to the surface as power demands increase. One of the most pressing concerns is power quality. Power quality problems result in wasted energy and harms to California's electric systems. A cost effective solution to California's power quality problems may exist in the form of a unified power quality conditioner (UPQC) using one-cycle control. Research is needed to test the feasibility of this technology before investors will risk developing it.
Proposed Research	The purpose of this project is to prove the technical feasibility of a unified power quality conditioner (UPQC) using one-cycle control. A UPQC is a device that is connected on the utility side of a substation to prevent most power quality problems. For this project the UPQC will be combined with one-cycle control which is a cost effective and reliable method for power that is recognized for its versatility and simplicity.
Research Results	The project was able to demonstrate that by using a one-cycle control to realize a new unified power quality conditioner, California's electricity market will experience the following benefits: increased electric power generation improved transmission capacity and reduced production failure rate.
Research Justification and Goals	Adds a project to the Commissions research portfolio that effectively balances the risks, benefits, and time horizons for various activities and investments that will provide tangible benefits for California electricity ratepayers as mandated by the Warren-Alquist Act; and has the potential to enhance the reliability, peaking power, and storage capabilities of renewable energy as mandated by the Warren-Alquist Act by: • Improving power quality problems such as harmonic, reactive power, voltage variation and resonance. • Increasing industrial output quality, energy efficiency, and power safety of California's electricity. • Providing electricity at a lower cost for Californians. • Increasing the power generation/transmission capacity, thereby increasing energy savings for Californians. • Reducing the air-borne emissions from the electric power industry in the State of California.
Contractor	University of California, Irvine
PIER Manager	Alec F. Jenkins

This project is being conducted by the California Energy Commission's Public Interest Energy Research (PIER) program. PIER supports energy research and development that improves the quality of life in California by bringing environmentally safe, affordable, and reliable energy services and products to the marketplace.

Use of Waste Fuel Gas to Reduce Biofouling of Power Plant Cooling Water Intakes

The Problem	The biofouling of water intakes and heat exchange surfaces is recognized as a major problem for the design and operations of water-cooled industrial processes. Because of the quantities involved, this water must come from untreated sources, and thus the biota entrained in the incoming water can attach to and colonize the bathed surfaces. Not only does their presence add friction to flowing water and thus decrease pumping efficiency, but larger biota can break off and become lodged in the down-stream condenser tubing, impacting cooling efficiency and ultimately requiring plant shutdown to remove the blockages.
Proposed Research	The purpose of this project is to research the feasibility of injecting a small amount of flue gas from a gas-fired power plant in the cooling water intake to serve as an anti-biofouling agent for the power plant cooling water intake surfaces. A series of tests will be conducted at the Duke Energy power plant at Moss Landing, California.
Research Justification and Goals	Adds a project to the Commissions research portfolio that emphasizes innovative energy supply and end use technologies, focusing on their reliability, affordability, and environmental attributes as mandated by the Warren-Alquist Act by: • Designing, constructing, and executing shore-side and in situ intake experiments that will determine the efficacy of using flue gas as an anti-biofouling agent. • Determining the antifouling effect (per unit surface area) of a given flue gas dose rate. • Quantifying the impediment to settlement and growth of biofoulers imparted by a given flue gas dosing rate. • Quantifying the downstream effects to pH and [O2] imparted by a given flue gas dosing rate to determine if water quality requirements are met.
Contractor	University of California, Santa Cruz
PIER Manager	Alec F. Jenkins

This project is being conducted by the California Energy Commission's Public Interest Energy Research (PIER) program. PIER supports energy research and development that improves the quality of life in California by bringing environmentally safe, affordable, and reliable energy services and products to the marketplace.

Ventilation Cooling Controller Strategies

The Problem	Many California buildings are not able to self-cool by utilizing one of their most abundant resources, the external cool air. Most California climate zones contain cool nighttime air that is currently unused for building cooling procedures.
Proposed Research	The purpose of this project is to research the feasibility of developing an intelligent natural-ventilation cooling controller that can determine and implement the most efficient strategy for pulling in outside air to reduce air conditioning costs in residential homes.
Research Justification and Goals	Adds a project to the Commissions research portfolio that emphasizes innovative energy supply and end use technologies, focusing on their reliability, affordability, and environmental attributes as mandated by the Warren-Alquist Act by: • Developing a prototype ventilation cooling controller with control logic designed for the 16 climate zones in California. • Assessing feasibility based on prototype performance testing in large-scale test cells. • Reducing or eliminating the need for air conditioning in California climate zones that have cool nighttime temperatures. • Achieving a minimum energy savings of 100,000 megawatt hours per year in California if the technology eliminates the need for one out of every thousand air conditioners.
Contractor	University of California, Los Angeles
PIER Manager	Alec F. Jenkins

This project is being conducted by the California Energy Commission's Public Interest Energy Research (PIER) program. PIER supports energy research and development that improves the quality of life in California by bringing environmentally safe, affordable, and reliable energy services and products to the marketplace.

EISG Projects Completed in 2005

A New Gas Turbine Engine Design for Electricity Generation with Increased Efficiency & Power

EISG Grant Number: 99-09
PIER Area: Environmentally Preferred Advanced Generation
Principal Investigator: William Sirignano (949) 824-3700
Organization: University of California, Irvine
Grant Amount: $75,000
Status: Active

Project Description:
Most of the new electrical generators installed in California are large (>50 megawatt (MW)), gas-fueled combustion turbines. A small increase in the efficiency beyond that of those turbines would have a major, positive impact on the price and availability of electricity on the California market.

This project investigated the potential of a new gas turbine cycle that the researcher named the "turbine-burner." In this cycle heat is added to the turbine gas flow using a conventional combustion system, and additional heat is added to the turbine gas flow by combustion inside the turbine itself. The researcher investigated both continuous stage-to-stage combustion (CTB) and discrete inter-stage burners (ITB). The ITB concept is similar to the inter-stage combustor found in the commercial Alstrom GT 24 gas turbine engine. There are two major benefits to sequential addition of fuel to a combustion turbine. First, the temperature of the gasses entering the next turbine stage is at the highest safe level, protecting the turbine while offering the greatest energy transfer to the turbine. Second, the energy in the compressed gasses is almost fully exploited by burning out nearly all of the oxygen in the air.

Further, this project investigated the effects of combining heat regeneration with continuous and discrete inter-stage combustion, and this was the principle focus of the analysis. Regeneration is the process of recovering heat from the exhaust gasses and transferring that heat to the high-pressure air exiting the turbine compressor. Solar Turbines Inc. has recently developed a 4.5 MW gas turbine with a regenerator. Micro-turbine manufacturers also offer regenerated engines. None has combined the regenerator and inter-stage combustor features into one engine model.

The researcher claims that the proposed cycle offers the potential to increase gas turbine thermal efficiency to a theoretical 65%, and to double the power density of the existing engines. Heat regeneration has a significant effect on the cycle efficiency, while inter-stage combustion increases the power density. The proposed engine is a recuperated engine with inter-stage burners. It is not a combined cycle gas turbine. Today's best combined-cycle gas turbines are approximately 60% efficient.

Proposed Outcomes:
The goal of this project was to determine the feasibility of implementing continuous combustion in the turbine section of a gas turbine combined with heat regeneration to increase thermal efficiency to the 65% level. The researcher established the following project objectives:

1. Determine the optimum design configuration for a gas turbine with continuous combustion and a regenerator. Perform detailed cycle analysis of several design concepts. Optimize the design by varying engine parameters such as turbine inlet temperature, pressure ratio and power distribution in the turbine stages.
2. Develop engine design tools using aero-thermodynamic and combustion analysis to evaluate the effects of continuous, in-stage combustion flow in the turbine section.
3. Calculate theoretical efficiency and power density for an engine with continuous combustion.

Actual Outcomes:

1. The project developed a computer code for the analysis of turbine cycles with inter-stage and continuous (in-stage) combustion. The researcher identified preferred design configurations.

2. The researcher developed a computational method and code for the compressible Navier-Stokes equations with multiple species and chemical reactions. Using this code the researcher studied a two-dimensional diffusion flame in a transonic flow with large stream-wise and transverse pressure gradients typical of conditions in a turbine passage.
3. The researcher calculated theoretical efficiencies and power densities.

Conclusions:

1. The project found that the discrete inter-stage burner (ITB) cycle is a good intermediate solution before the technological challenges of the continuous turbine-burner cycle can be resolved. Direct combustion in the turbine section can lead to material failures if the ignition, flame-holding and control techniques are not properly developed.
2. The researcher determined that ignition and flame-holding in the turbine passage under conditions of high acceleration of the flow is possible for methane/air mixtures when the incoming air is sufficiently heated.
3. The theoretical maximum efficiency is 65%. The best power density is approximately 2.5 times that of an engine with a single traditional combustor. These numbers represent best theoretical values and may not be achievable in practice.

The researcher has established the theoretical feasibility of the ITB and CTB concepts using analytic modeling as originally proposed. In addition the researcher has identified several issues for further research. These include studies of combustion in a turbine passage, ignition and flame holding methods, and the development of a large eddy simulation code. The Program Administrator identified several practical obstacles that could impede the progress toward a physical realization of the CTB concept. These include materials challenges in the turbine section, durable high-temperature regenerators, high-effectiveness regenerators, sensors and controls for the continuous burning section, controls for load following, and manufacturing problems associated with a rather complex system. These many issues remain to be addressed through follow-on RD&D.

The major contributions of this research are the analytical tools and models developed to study combustion within the turbine section of the engine. In addition, the concepts developed in this project are better suited to combustion turbines less than 50 MW. The size and cost of regenerators will limit the size of regenerated, combustion turbines. If the proposed concepts can be commercialized, the resulting combustion turbines will be highly efficient offerings in the distributed generation market.

Turbine design engineers are very conservative because their customers demand very high reliability. The gas turbine industry may adopt the concepts developed in this project, but at a very measured pace. The Alstrom GT24 already employs one inter-stage combustion chamber that approximates the ITB concept described by the researcher. Other manufacturers have offered regenerated engines.

Benefits to California:

This project provides the theoretical background for a combustion turbine system with increased efficiency and power density. Many technical hurdles stand between the concept and a practical turbine engine. For this reason California will only realize benefits after a significant amount of applied research and development. The Program Administrator estimates that this line of research might provide ratepayer benefits in the 2017 to 2022 timeframe. The project concept, if successful, will reduce fuel consumed to produce electricity and could significantly lower the initial capital cost of a turbine generator.

Recommendations:

The Program Administrator recommends that the researcher engage a gas turbine manufacturing company in the evaluation and development of the CTB concept. The manufacturer must develop an engineering development plan utilizing the researcher's concepts before further
study should begin. Significant additional research is required before commercial application of these concepts can occur. Thus, the researcher should seek follow-on funds from institutions that focus on basic research to reduce the perceived level of risk. The addition of a gas turbine manufacturer to the research team could significantly reduce the time required to bring this technology to the market.

Project Status:

- 100% Completed.
- Completed on Schedule.
- Completed within Budget.
- Final Report Completed.
- Feasibility Analysis Report Completed.

Composite Architectures for Sub-600C Solid Oxide Fuel Cells

EISG Grant Number: 99-35
PIER Area: Environmentally Preferred Advanced Generation
Principal Investigator: Lutgard De Jonghe (510) 486-6138
Organization: University of California, Berkeley
Grant Amount: $70,811
Status: Completed

Project Description:
Fuel cells incorporating a stack of solid oxide membranes can be highly efficient and environment-friendly systems for electrical power generation. Their broad implementation is, however, hindered by high capital costs and by performance issues that arise when low-cost configurations are contemplated. An essential characteristic of solid oxide fuel cell systems that can solve the cost problem is operation at temperatures much below the current operational domain of 850-1000^{0}C. Significant reduction in temperature creates the potential for the use of low-cost materials for metallic interconnects, fuel cell membrane support structures, and sealing. This project targeted an important technical issue that limits the effective functioning of low-cost solid oxide fuel cells: offsetting the decreased electrode activity that accompanies reduction in temperature. This project addresses the PIER subject area of Environmentally Preferred Advanced Generation.

This project studied the feasibility of configuring novel composite architectures for solid oxide fuel cells targeted for operation at or below 600^{0}C. It addressed the issue by formulating and characterizing composite electrodes functioning in laboratory cells between 550 and 700 ^{0}C.

The project led to the formulation of solid oxide fuel cell membrane assembly configurations and compositions, incorporating novel composite electrodes that can be expected to offer significant improvements over existing approaches.

Proposed Outcomes:
The goal of this project was to determine the feasibility of operating composite fuel cell membranes efficiently at 600^{0}C and below, while achieving an overall membrane area resistance of less than 1 Ohm-cm^2 at these low temperatures. The following project objectives were established:

1. Develop a fuel cell membrane utilizing low-cost colloidal techniques in the manufacture of the cell.
2. Develop a multilayer cathode supported fuel cell structure.
3. Measure cell performance, including membrane area resistance, at temperatures of 550 to 700ºC using both galvanostatic techniques and electrochemical impedance spectroscopy.
4. Develop a high performance multilayer cathode structure on an anode supported Yttria Stabilized Zirconia (YSZ) or Scandia Stabilized Zirconia (SSZ) electrolyte.
5. Develop a method for optimizing fuel cell electrodes at different temperatures.

Actual Outcomes:

1. The project formulated a novel solid oxide fuel cell membrane composite architecture.
2. The cathode supported membrane contained pinholes. It was estimated that insufficient time was available to develop a technique that would not result in pinholes on the membrane. As a consequence, an anode supported fuel cell structure was introduced as objective 4.
3. The cathode consists of a dual layer of Lanthanum Strontium Manganate (LSM) compositions, with catalytic activity further enhanced by doping with cobalt.
4. Cathodes with various ratios of Lanthanum to Strontium were constructed and tested. Also, cathodes incorporating cobalt oxide were tested.
5. Cathode studies are particularly useful in optimizing fuel cell electrodes. The project used current versus over potential (Tafel) plots, and impedance spectra.

6. The investigator found that doping the cathode with cobalt could reduce cathode impedance at 600°C, and increase the maximum power density by more than a factor of two; however, the goal of a 1 Ohm-cm^2 composite membrane resistance was not achieved at 600°C.

Conclusions:

1. The composite cathode structure developed is relatively easy to fabricate.
2. The membrane is best anode-supported rather than cathode-supported.
3. The composite cathode structure consisted of a catalytic layer of LSM 85 / YSZ and a current collecting layer of LSM 45.
4. The best composite cathode structure consisted of a catalytic layer of LSM 85 / YSZ and a current collecting layer of LSM 45. Doping with Cobalt (not Cobalt Oxide) content was shown to improve performance at low temperatures.
5. Complete analysis of the kinetic data obtained from these experiments proved to be beyond the scope of this project. However, clear trends in performance, such as improvements due to Cobalt doping, were readily apparent.

Benefits to California:

Results of this research were presented at the San Francisco Local Section meeting of the Electrochemical Society. The research will also serve as a starting point for further research on cathode microstructure and kinetics at low temperatures.

When the cathodes formulated as a result of this work are incorporated into commercial fuel cell structures, greater efficiency could be obtained at reduced temperatures. This can accelerate the adoption of solid oxide fuel cells for applications such as distributed power generation. This in turn would lead to reduced strain on the aging electricity transmission grid, greater reliability, and substantive cost savings due to greater efficiency.

Recommendations:

The composite cathode architectures and materials identified in this project offer improved performance at lower temperatures. In particular, LSM 85 / YSZ catalytic layers exhibited the best performance at low temperatures. It is recommended that an anode-supported solid oxide fuel cell membrane configuration be adopted, with thinner composite cathodes than originally envisioned, and that the composite cathode be applied by the colloidal methods described in
this work.

Project Status:

- 100% Completed.
- Completed on Schedule.
- Completed within Budget.
- Final Report Completed.
- Feasibility Analysis Report Completed.

Corrosion Resistant Coating for Carbonate Fuel Cell Components

EISG Grant Number: 00-05
PIER Area: Environmentally Preferred Advanced Generation
Principal Investigator: Yuhong Huang (818) 727-9786
Organization: Chemat Technology, Inc.
Grant Amount: $75,000
Status: Completed

Project Description:
Molten carbonate fuel cells are energy-efficient and environmentally clean devices for the generation of electric power. They can be fueled directly with natural gas or biomass-derived gasses. High capital cost and durability problems have slowed deployment of these fuel cells. The durability problems derive primarily from corrosion of system components by the carbonate. Although molten carbonate fuel cells (MCFC) are now being offered in sizes from 0.3 megawatts (MW) to 3.0 MW, warranties are limited, and service contracts are expensive (~$200/kW
per year).

Molten carbonate fuel cells offer higher potential energy efficiency (~60%) than phosphoric acid fuel cells (~45%), micro-turbines (~28%), mid-sized gas turbines (~38%), or natural-gas-fueled reciprocating engines (~38 %). A molten carbonate fuel cell would be an excellent candidate for grid-connected distributed generation if its cost and durability problems were resolved. In a distributed-generation scenario the molten carbonate fuel cell could cleanly, quietly, and efficiently provide electricity. Molten carbonate fuel cells could be sited in dense urban areas without a negative effect on air quality.

In a recent (2003) survey conducted by the California Power Authority, molten carbonate fuel cells provided the lowest cost electricity ($0.13/kilowatt hour (kWh) before incentives) of any fuel cell available for installation. Maintenance was included in the cost estimates.

In this project the researcher proposed applying a sol-gel coating to reduce the corrosion of the cathode current collector (CCC) and the cathode material. Experts consider corrosion in these areas the most important factor impairing the useful life of carbonate fuel cells. The researcher proposed depositing a lithium-cobalt dioxide ($LiCoO_2$) coating on a porous nickel cathode substrate and a corrugated CCC and testing the performance of these components with the new coating. The researcher chose $LiCoO_2$ for the coating material because it has high electronic conductivity and high corrosion resistance.

Proposed Outcomes:
The goal of this project was to determine the feasibility of using a sol-gel coating ($LiCoO_2$) to reduce the corrosion of cathode current collector and nickel oxide (NiO) cathode in molten carbonate fuel cells. The researcher established the following project objectives:

1. Improve the corrosion resistance of the NiO cathode and cathode current collector.
2. Increase the lifetime of molten carbonate fuel cells by 100%.
3. Determine economic feasibility of the coating.
4. Determine technical feasibility by evaluation of $LiCoO_2$ film in the fuel cell operating environment.

Actual Outcomes:

1. Data collected in this project indicated a decay rate of about 10 millivolts (mV)/1000 hours. This rate was approximately the same for coated and uncoated samples. Electrolyte creepage loss was one-third less on the coated CCC than on the non-coated control sample. Electrical resistance of the coated CCC was stable for an 1800-hour test.
2. The researcher claimed MCFC life could be extended by a factor of two to five but did not include a product-life-cycle analysis in the final report to support that claim. Some data in the final report indicate that fuel-cell life could be extended with the $LiCoO_2$ sol-gel coating. On the other hand, one test apparently failed at 3700 hours. No explanation was given for the early termination of that test.

3. The researcher did not provide economic feasibility information. He stated this sol-gel process is inexpensive (<$1per square meter).
4. The researcher developed coating methods for both the porous nickel and corrugated CCC. The coatings were successfully applied.

Conclusions:

1. Data presented in the final report support the claim of reduced corrosion of the CCC when coated with $LiCoO_2$.
2. No product-life-cycle analysis was included in the final report. The performance charts in that report indicate fuel-cell failure in as little as 3700 hours. Scientific literature contains data for single-cell, fuel-cell tests surpassing 15,000 hours with decay rates of less than 5mV/1000 hours. The researcher may not have adequately characterized the life-extension benefits of the $LiCoO_2$ coating.
3. The Program Administrator cannot determine the economic feasibility of the coating process without knowing the life extension of the MCFC and the coating cost relative to the costs of other components.
4. The researcher was able to apply the sol-gel coating to the critical MCFC components. The coating did not degrade the performance of the components.
5. The researcher should be encouraged to continue this line of work. It appears that substantial progress has been made toward reducing corrosion in the molten carbonate fuel cell. Unfortunately the researcher did not present project data in the final report in a manner that clearly proves the feasibility of this project.

Benefits to California:

Molten carbonate fuel cells offer the potential of high fuel efficiency and extremely low exhaust emissions. These properties are highly desirable for grid-connected distributed-power systems. Successful introduction of a durable MCFC at a reasonable capital cost could speed the introduction of distributed generators into the power grid. Overall fuel efficiency would be greatly improved for generation of electricity in California, and air emissions would be greatly reduced. Insufficient data were presented to quantify the benefits.

Recommendations:

The researcher has made significant progress in addressing the durability of MCFCs. Unfortunately the data presented in the final report (Appendix A) is not in a form that allows one to determine the magnitude of the advance. The Program Administrator recommends the following:

1. Clearly address the project objectives in a technical report. Explain the rapid decline in performance and the early cell failure shown in Figure10a of Appendix A.
2. Quantify the results and compare to existing life and durability data for near-commercial MCFCs.
3. Work with a major developer of MCFCs such as FuelCell Energy to determine the value of the coating in a real-world product.
4. Obtain patent protection for the process used to coat the MCFC components.
5. Analyze material safety data for the $LiCoO_2$ to ensure compliance with existing regulations.

Project Status:

- 100% Completed.
- Completed on Schedule.
- Completed within Budget.
- Final Report Completed.
- Feasibility Analysis Report Completed.

Development of a PEM Electrolyzer: Enabling Seasonal Storage of Renewable Energy

EISG Grant Number: 00-25
PIER Area: Renewables
Principal Investigator: Peter Lehman (707) 826-4345
Organization: Humboldt State University Foundation, Schatz Energy Research Center
Grant Amount: $74,478
Status: Completed

Project Description:
Many renewable energy sources are intermittent. Because of this characteristic, it is difficult to sell the electricity generated by those renewable sources into a forward market. The result is less revenue to the owner of the generator. One solution is to generate hydrogen with the renewable energy, store it, and consume the hydrogen in a fuel cell to provide electricity when needed. While holding hydrogen gas at high-pressure is the lowest cost method of hydrogen storage, it is not inexpensive. Compressing hydrogen is a major cost and thus is a deterrent to converting electricity generated from renewable sources to hydrogen to be stored for future use. Current technology hydrogen generators produce hydrogen at up to 375 psig (pounds-force per square inch gauge). Mechanical compression of the hydrogen, a highly energy intensive process, is used to achieve storage pressures. In addition, most current generation high-pressure electrolyzers incorporate caustic liquid alkaline electrolytes and other hazardous materials. To solve the compression cost problem, one needs a non-caustic electrolyzer that produces hydrogen at storage pressure, eliminating the need for mechanical compression. An electrolyzer of this type is not currently available.

If the hydrogen storage cost problem were solved, renewable energy generators could provide more predictable power, allowing Californians to rely on more renewable energy. Generators would be able to utilize the forward markets and realize higher net revenues. With economical storage investors could develop more wind and solar electricity generators throughout the State. By adding predictable renewable energy into the California grid, grid operators might have less need to dispatch energy-inefficient "peaker" generators. In addition, if renewable generator output were more predictable, grid operators would not need to maintain fossil fueled plants at ready for system backup.

The researcher in this project proposed to produce high-pressure (2000 psig) hydrogen with a proton exchange membrane (PEM) electrolyzer. PEM electrolysis uses a solid electrolyte identical to that used in PEM fuel cells. PEM solid electrolyte is free of toxics and cannot spill or leak. In comparison with the more established alkaline electrolyzer technology, PEM electrolyzers are safer by virtue of their solid, inert electrolyte. They are capable of being operated at much higher pressures, and they can sustain high current densities. Other researchers have developed the concept of a PEM electrolyzer. Several PEM electrolyzers are available in the market today.

The advancement of science in this project was to design the electrolyzer to withstand high pressures. The researcher in this project developed a design and selected appropriate materials to produce hydrogen at pressures of 2000 psig. The design had to solve the problem of hydrogen cross-over (to the anode) as the pressure increased. Safe handling of the oxygen developed in the electrolyzer was another key design challenge.

Proposed Outcomes:
The goal of this project was to determine the feasibility of designing a proton exchange membrane (PEM) electrolyzer to produce at least three standard liters per minute (slm) of hydrogen at 2000 pounds per square inch gauge pressure (psig). The researchers established the following project objectives:

1. Develop a PEM electrolyzer to generate three standard liters per minute of hydrogen.
2. Develop a PEM electrolyzer to generate hydrogen at 2000 psig without the use of mechanical pumps.
3. Achieve voltage efficiency of the electrolyzer > 90%.

Actual Outcomes:

1. The one-cell electrolyzer developed in this project produced 0.22 slm of hydrogen per minute. To achieve the desired 3 slm of hydrogen per minute the researcher proposed building a stack of 14 cells.
2. The researcher achieved the 2000 psig pressure objective in one-cell and two-cell electrolyzers.
3. The researcher measured the voltage efficiency at 92% and 95% in two different tests.

Conclusions:

1. While showing a path to achieve the objective of 3 slm, the researcher should evaluate the costs associated with combining multiple cells to achieve the desired hydrogen output.
2. The researcher achieved a major pressure objective. This is a notable achievement and should reduce the cost of storing hydrogen produced by renewable energy generators or regenerative fuel cells.
3. The researcher met the voltage efficiency goal. Electrolyzers with higher voltage efficiency numbers are more energy efficient.
4. The researcher considers the specific materials used to prove feasibility confidential. The researcher also considers his solution to the hydrogen cross-over problem confidential.

Benefits to California:

If the technology developed in this project were to be deployed commercially, Californians could enjoy the benefits of more renewable energy in the supply mix. A major benefit would be reduced air emissions because grid operators would not dispatch fossil fuel burning power plants for energy nor have them run as backup to support the grid if a renewable energy generator were suddenly to reduce output. Emissions from the standby generators reduce the air quality benefits of renewable energy generators. A second advantage would be greater grid stability due to the distributed nature of the renewable generators and the capability to produce electricity from the stored hydrogen when needed.

Recommendations:

1. The researcher should calculate the "round trip" efficiency of converting renewable electricity to stored hydrogen and back to electricity. The U.S. DOE has established a goal of 70% for round trip efficiency. To achieve 70% one would need a hydrogen fuel cell operating near 80% efficiency and an electrolyzer operating at nearly 90% efficiency.
2. The researcher should calculate the expected cost of the PEM electrolyzer. The researcher should express cost in dollars per megawatt hour ($/MWh). Research to reduce electrolyzer cost will be needed before a commercial product can be produced. The researcher should identify less costly but suitable diffuser materials for use in the module.
3. Efforts should continue to increase the working pressure of the electrolyzer.
4. Long-term bench tests should be conducted to determine the durability and reliability of the module design.

Project Status:

- 100% Completed.
- Completed on Schedule.
- Completed within Budget.
- Final Report Completed.
- Feasibility Analysis Report Completed.

Development of Optimum Design Configuration and Performance for Vertical Axis Wind Turbine

EISG Grant Number: 00-17
PIER Area: Renewables
Principal Investigator: Hamid R. Rahai (562) 985-5132
Organization: California State University, Long Beach (CSULB) Foundation
Grant Amount: $69,781
Status: Completed

Project Description:
This project was undertaken to improve the efficiency of vertical axis wind turbines with the expectation that the inherently simple vertical axis turbines could be manufactured at low cost, leading to their widespread use. The research proposal noted that small units could be manufactured for distributed generation of electricity in residential and commercial locations. The units would be grid connected to take advantage of net metering and would provide pollution free generation of electricity using a renewable resource at a cost competitive with power supplied by the grid.

The researcher estimates that a moderate sized residential unit would generate 2700 kilowatt hours (kWh) per year and that the low cost of the unit would allow a simple payback of investment from energy savings in three years. If 100,000 of these small wind turbines were installed in California they would eliminate the annual generation and release of nearly 10 tons of oxides of nitrogen and over 13 tons of carbon monoxide gas. These calculations are based on California's 2007 air emission standards for natural gas burning distributed generation. Displacing older generators would result in greater environmental benefits.

The simplest vertical axis wind turbine is called the Savonius wind turbine. Operation of the Savonius wind turbine is based on the difference of the drag of its semi-spherical vanes, depending on whether the wind is striking the convex or the concave part of the vane. The advantage of this type of wind turbine is that it is self-starting and relatively independent of the wind direction. It is simple to design and has relatively low construction cost. However it has
low efficiency.

The approach taken by this project was to improve the efficiency of the vertical axis (Savonius-type) wind turbine by modifying the blades. The blade shape was iteratively designed using Computational Fluid Dynamics software embedded within a torque maximization program using the Trans Finite Interpolation method. A scale model vertical axis wind turbine featuring the optimized blade design was constructed and tested in the Boeing/CSULB low-speed wind tunnel. Wind tunnel tests confirmed a 40% increase in peak power coefficients over prior art.

Proposed Outcomes:
The goal of this project was to determine the feasibility of developing a high efficiency Savonius-type vertical axis wind turbine by modifying the blade (airfoil) shape. The researcher established the following project objectives:

1. Increase the efficiency of the vertical axis wind turbine design 20% to 30% by applying computational fluid dynamics (CFD) software to optimize the airfoil shape.
2. Experimentally verify the design by testing scale model wind turbines in the Boeing/CSULB low speed wind tunnel.

Actual Outcomes:

1. The researcher used CFD software and an optimizer routine for the shape-optimization process. Results of this study showed nearly 27% improvement in the torque coefficient for both single and two-blade configurations with the optimized geometry. The computations also led the researcher to investigate the placement of slots in the airfoils at the location where maximum flow separation was observed at high angles of attack. The improvement in the torque coefficient without the slots was greater than that with the slots.
2. The researcher fabricated two small-scale vertical axis wind turbines, one with and one without span-wise slots. They were tested in the Boeing/CSULB low speed wind tunnel at three free-stream mean velocities: 6.8, 8.0, and 9.75 m/sec (15.2, 17.9, and 21.8 miles/hr). The experiments were performed for both zero and 48% overlap of the blades. Torque was measured directly using an electric dynamometer. Results showed nearly 40% and 17% improvement in power coefficient for the optimized blades without and with the slots respectively. The conditions for these results were zero overlap at the mean velocity of 6.8 m/sec.
3. It was determined the optimized wind turbine operated more efficiently than the Savonius wind turbine at all tip speed ratios. A significant result of this study was the determination that the optimized wind turbine operated efficiently at a much higher rotation rate than the Savonius wind turbine could operate. The Savonius wind turbine provides its maximum power coefficient (about 30%) at a tip speed ratio of approximately 1.0. The optimized wind turbine with no slots and zero overlap produced a power coefficient greater than 40% at a tip speed ratio of 1.6. At this tip speed ratio, the Savonius turbine power coefficient dropped to below 5%.

Conclusions:

1. This project confirmed the feasibility of using computational fluid dynamics software to aid the design of single blade, vertical axis, wind turbine airfoils. It is reasonable to expect investigations of multi-bladed vertical axis wind turbines could be accomplished using the same computational approach. CFD software is already used in other energy products including centrifugal pumps vanes and gas turbine compressor and turbine blades.
2. Wind tunnel testing confirmed the most efficient vertical axis wind turbine design used the optimized airfoils without slots and mounted with no overlap. This design demonstrates high efficiency over the range of wind speeds from 6.8 m/s to 9.75 m/s.
3. The optimized wind turbine provided higher power coefficients over a broad operating range. The characteristic of providing power at much higher tip speed ratios potentially increases the total power produced by the turbine. The optimized wind turbine provided optimum power at a tip speed ratio of 1.6. This is 60% faster than the Savonius wind turbine. For this reason the redesigned turbine provides 60% more power than a Savonius turbine operating at a tip speed ratio of 1.0. Coupled with the approximate 33% increase in the power coefficient, the new design could produce over twice the power of the conventional Savonius wind turbine under comparable conditions.

Benefits to California:

Because the researcher saw a market in small vertical-axis wind turbines he did not make absolute comparisons between the optimized vertical axis wind turbine and the conventional horizontal axis wind turbines that are commercially available. The researcher speculated that a one-kilowatt vertical-axis wind turbine generator system could be built for $300. To ascertain the value of this research to the California ratepayer, the Program Administrator requires a more accurate estimate of the cost to construct and maintain a vertical axis wind turbine with optimized blades. This estimate could assume deployment in one of California's traditional wind regions or in high-density urban areas. The improved design vertical axis wind turbine could prove to be more cost effective than horizontal axis turbines because of the improvements in blade design and the elimination of equipment required to maintain a horizontal axis machine heading into the wind. Any improvements to the cost and durability of wind turbine generation systems could have significant favorable impacts on the California ratepayer. These benefits include: lower cost renewable resource electricity; increased production of renewable resource electricity, reduced air pollution; and increased energy security through local electricity production.

Recommendations:
This project demonstrated the utility of using CFD to redesign the blades of vertical axis wind turbines. The redesigned wind turbine can generate electric power at relatively moderate wind speed with an efficiency that is near that of a comparable horizontal axis wind turbine. The Program Administrator recommends that a thorough cost analysis be completed for the redesigned vertical axis turbine. That study should focus on production costs to build and install it in selected markets. A person familiar with maintaining wind turbines in a California wind region should then evaluate maintenance costs for the vertical axis machine. If these studies indicate a significant life cycle cost advantage, the researcher should team with a wind generation company to field-test a CFD-improved vertical axis wind turbine at a power level of 1 kilowatt or more at wind speeds of 10-15 miles/hr. The Program Administrator recommends significant instrumentation be applied to that demonstration turbine to ascertain it performance, sensitivity to environmental contamination, and noise levels.

Project Status:
- 100% Completed.
- Completed on Schedule.
- Completed within Budget.
- Final Report Completed.
- Feasibility Analysis Report Completed.

Energy-Efficient Process for Using Membrane Technology to Treat and Recycle Agricultural Drainage Water

EISG Grant Number: 01-23
PIER Area: Industrial/ Ag/ Water
Principal Investigator: Ronald Enzweiler (925) 283-4918
Organization: WaterTech Partners
Grant Amount: $74,788
Status: Completed

Project Description:
U.S. Environmental Protection Agency has identified agricultural drainage/runoff as a significant contributor to surface water pollution. Pollutants that result from drainage/runoff are sediment, nutrients, pathogens, pesticides, and salts. The sources of these pollutants are confined animal facilities, grazing animals, and agricultural activities: plowing, pesticide spraying, irrigation, fertilizing, planting, and harvesting. In California, the viability of farming on 861,423 acres of prime farmland in western San Joaquin Valley is threatened by unresolved drainage problems. Drainage cleanup and reuse (recycling) are not being considered as a solution because a viable technology does not exist to recover 99% water content of agricultural drainage in a reliable, energy efficient, and cost-effective manner. Membrane technology has potential as a recycling solution for the agricultural drainage problem. It is extensively used for seawater desalination, but fouling problems have limited its ability to treat agricultural drainage. Although seawater total dissolve solids (TDS) are 35,000 milligrams per liter (mg/L) versus 3,000 to 12,000 mg/L TDS for agricultural drainage, high calcium sulfate ($CaSO_4$) saturation in drainage has limited recovery by reverse osmosis to < 50%.

The estimated public funds required to implement the U.S. Bureau of Reclamation disposal plan is $716 million, projected to be $425/acre-foot (AF). The utilization of an improved membrane technology to recycle 80,000 AF of agricultural drainage for irrigation would avoid significant public fund expenditures and reduce processing energy consumption from 3,200 kilowatt hours per acre-foot (kWh/AF) (based on best seawater desalination) to 2,400 kWh/AF.

WaterTech Partners proposed to improve the reverse osmosis recovery and reduce energy consumption by developing a two-pass membrane process utilizing preferential precipitation of dissolved $CaSO_4$ (see Figure below). In this arrangement, the precipitated $CaSO_4$ (as well as other salts) would be removed from the drainwater feed in the 1st pass nanofiltration (NF) membrane. The 2nd pass reverse osmosis unit would continue the clean-up of the water to meet irrigation requirements (<500 mg/L TDS with a sodium adsorption ratio <4.0).

Proposed Outcomes:
The goal of this project was to demonstrate the feasibility of the proposed two-pass membrane system as a viable technology solution for agricultural drainage water recycling. The researchers established the following project objectives:

1. Prove that "preferred precipitation" nanofiltration will lower agricultural drainage hardness from 2,000 mg/L to less than 50 mg/L.
2. Demonstrate the pilot-scale operation of a two-stage membrane filtration in which the total energy consumption is less than 2,400 kWh/AF (25% less than most efficient commercial reverse osmosis desalination processes).
3. Demonstrate the pilot-scale operation of a two-stage membrane filtration whose total cost is 25% below the least costly commercially available seawater desalination process.

Block Diagram of the Basic Process:

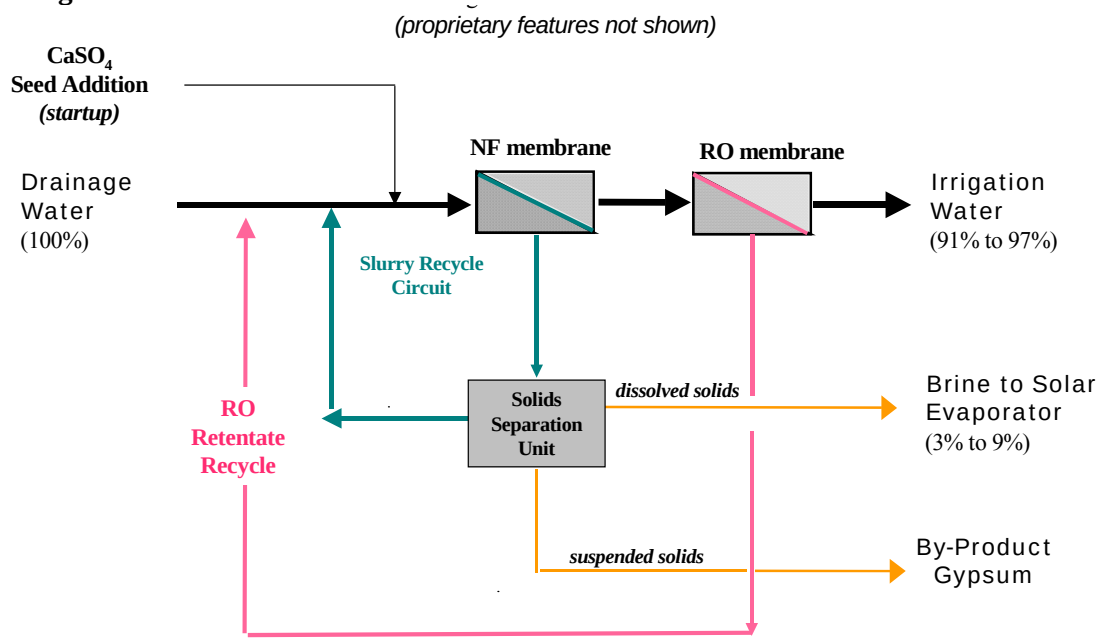

Actual Outcomes:

1. The researchers identified, through performance testing, a preferred nanofiltration membrane. They tested the nanofilter with "preferred precipitation" and were able to operate, on agricultural drainage, with less fouling than without "preferred precipitation."
2. The simulated specific energy consumption for a two-stage membrane system using "preferred precipitation" was lower (2,163 kWh/AF) than 2,400 kWh/AF (as proposed) for only one case: feed that is solar pre-heated (95°F) and with a TDS levels of 6,450 mg/L. The researchers calculated the membrane energy consumption from feed pressure and flow for the simulated two-stage system.
3. The estimated costs for a water plant using the technology developed in this project are $564/AF to $845/AF depending on feed TDS and use of solar energy for feed preheating. For comparison, the TDS of seawater is 35,000 mg/L and its desalination costs about $850/AF. However, a direct comparison with seawater desalination would be misleading because of the $CaSO_4$ precipitate problem associated with agricultural drainage water.

Conclusions:

The researchers successfully proved the feasibility of "preferred precipitation" combined with nanofiltration as a method to process agricultural drainage water without fouling.

1. The use of "preferred precipitation" provides a method to process and recycle agricultural drainage using membrane technology without fouling problems. This was proved feasible by processing 1,500 gallons of Panoche tile-drain water over a 150 hour test period.
2. The amount of electric power for a simulated two-stage membrane water treatment plant did not meet the proposed goals of the project (<2,400 kWh/AF), but it is less than state-of-the-art seawater desalination reverse osmosis plants.
3. The water production cost of the two-stage membrane water treatment plant is less than a typical seawater desalination reverse osmosis plant, but it is difficult to conclude that this is a level field comparison. Note that seawater desalination reverse osmosis plants process feedwater with higher inlet TDS than the water from agricultural drainage.

Benefits to California:

The project demonstrated that "preferred precipitation" combined with nanofiltration is a legitimate method for processing agricultural drainage. The research has significant value for the processing of

agricultural drainage and recycling irrigation water. It is an environmentally attractive method of drainage processing compared to the proposed evaporation ponds.
It is unclear if this technology saves electric energy. The researchers derived an estimate of electric consumption by calculation based on feed pressure and flow, instead of measuring it. Since feed pressure and flow vary over time, this calculation can be complicated when considering real-world pump-motor systems.

The researchers also cite that this system could save 418 million kWh/yr, but they compared this system to a seawater desalination plant. Not all of the irrigation water used is from seawater desalination plants. They did not include the pumping energy to deliver irrigation water or the potential to use this in power plants to reduce imported water.

The researchers identified optimization methods that may be explored to further reduce energy consumption and energy cost of the two-stage water treatment plant. These may include off-peak operation, use of solar pre-heating of feedwater, and use of single-stage membrane systems.

Recommendations:
The Program Administrator makes the following recommendations for this project:

1. Future development and testing should include energy optimized pilot system operation where energy consumption and clean water production are measured.
2. The researcher should compare energy and cost of this technology with the primary drainage treatment method: evaporation ponds or other methods that treat brackish water, not seawater.
3. The researcher is encouraged to identify electric energy savings other than seawater desalination such as avoided irrigation water pumping.
4. The researcher should pursue ways to further reduce the energy consumption of the two-stage water treatment plant.

Project Status:

- 100% Completed.
- Completed on Schedule.
- Completed within Budget.
- Final Report Completed.
- Feasibility Analysis Report Completed.

Evaluation of New Solar Air-Conditioning System

EISG Grant Number: 00-16
PIER Area: Buildings End-Use Energy Efficiency
Principal Investigator: Bill Kopko (703) 323-9578
Organization: WorkSmart Energy Enterprises, Inc.
Grant Amount: $74,546
Status: Completed

Project Description:
Air conditioning powered by solar energy has great potential, in part because high demand for cooling usually coincides with plentiful sunlight. The intensity of solar energy on the roof of a typical single-story building in California is roughly ten times the cooling requirement for the same building. Solar air conditioning at an economically competitive level could reduce electricity costs for residential and small commercial customers. This would cut the growth of peak electric demand and ease the increasing pressures on generating capacity, transmission, and distribution. Currently available technologies are neither practical nor cost-effective. Photovoltaic (PV) systems require a large roof area and cost many times more than a conventional air conditioner. Thermally driven absorption cooling requires costly, high-temperature collectors and undesirable cooling towers. Furthermore, these systems have a disconnect of several hours between peak cooling capacity and peak cooling demand. That in turn requires electric or thermal storage in order to maximize the solar contribution.

A solar air-conditioning system employing relatively inexpensive low-temperature collectors, coupled with an innovative desiccant dehumidification and evaporative process, provides a new prospect for cost-effective solar cooling. If proven practical and economical, the savings potential in the California market for rooftop air conditioning would be 8.5 billion kilowatt hours (kWh) in energy and $1 billion per year. This corresponds to a reduction in electric demand in California of 5,500 megawatts (MW). The potential nitrogen oxides (NO_x) reduction in California is 2,400 tons annually, based on the state average 2000 annual NO_x output emission rate of 0.564 pounds per megawatt hour (lb/MWh).

The research concept couples modest-cost, low-temperature collectors with a low-cost calcium chloride solution for desiccant dehumidification and thermal storage. The addition of an evaporative cooler produces air conditioning at a competitive cost. The economic viability of this concept depends on optimizing the system and its components and on developing two key innovations—a low-cost heat exchanger and a solar thermal desiccant-regeneration subsystem.

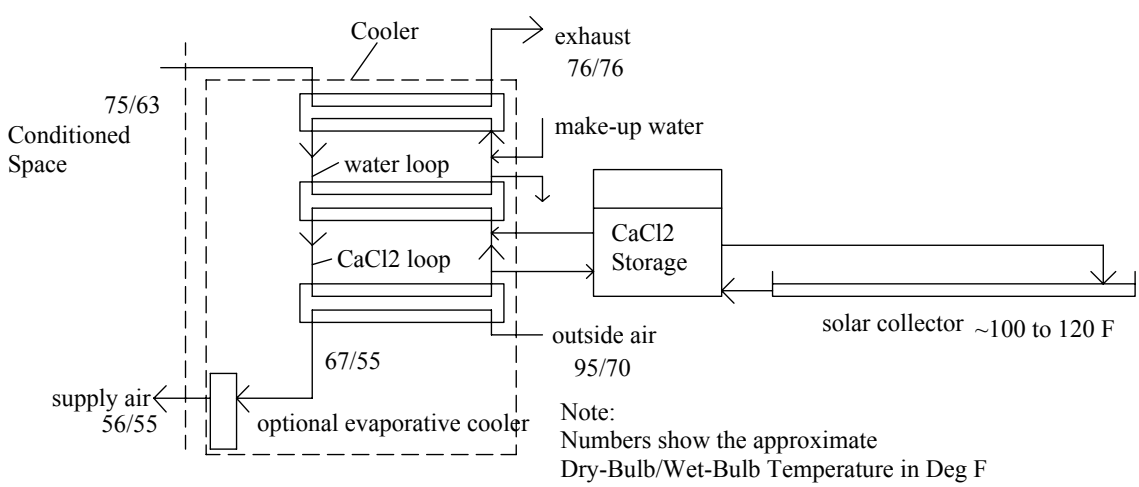

A calcium chloride solution concentrates (regenerates) while passing over the solar collector array. The concentrated calcium chloride solution cools via a plastic liquid-to-liquid heat exchanger and is then exposed to incoming outside air through a direct-contact enthalpy exchanger, similar to an evaporative cooler. Exhaust air from the conditioned space cools evaporatively, and the cooled water from the

evaporative cooler sump reduces the temperature of the warm, concentrated calcium chloride solution through the plastic heat exchanger.

Proposed Outcomes:
The goal of this project was to determine the feasibility of a thermally driven, solar air-conditioning system employing desiccant dehumidification low-temperature collectors for desiccant regeneration and evaporative cooling. The researchers established the following project objectives:

1. Identify a design for a leak-free plastic liquid-to-liquid heat exchanger with a heat-transfer coefficient of 50 British thermal units per hour per square foot per degrees Fahrenheit (BTU/hr/ft^2/^{o}F).
2. Achieve collector water-evaporation rate of 1.0 pounds per day per square foot (lb/day/ft^2).
3. Plan for the first cost in the same range as high-efficiency electric air conditioning evaporator rooftop systems ($1,800 to $2,200 per ton installed).

Actual Outcomes:

1. Nine different designs of low-cost, liquid-to-liquid heat exchangers were evaluated; two were tested. The preferred configuration consisted of plastic sheets welded together to form two counter-flow channels. It was the easiest to assemble and achieved a heat-transfer coefficient of 40 BTU/hr/ft^2/^{o}F, but the development of small circuit-to-circuit leaks prevented lengthy and repeatable testing.
2. Sample solar-collector tests measured the evaporation rate from a calcium chloride solution. The sample collector consisted of a plastic plate filled with calcium chloride solution and covered with a black polyethylene film. The measured evaporation rates ranged between 0.5 and 1.0 lbm/day/ft^2 under partly cloudy summer conditions in Northern Virginia.
3. The estimated cost per ton was based on modeled subsystem sizes and projected costs for materials, factory labor, mark-up, freight, and installation. The total projected price to an end user was $1,825 per ton. Electricity requirements are expected to be on the order of 0.25 kilowatts per ton (kW/ton), about ¼ that of a high-efficiency electric rooftop package. Annual water usage is estimated at 6,000 gallons per ton for a typical California application.

Conclusions:

1. Low-temperature solar collectors can provide effective regeneration of a calcium chloride liquid desiccant solution. Average evaporation rates of 0.5 to 1.0 lbm/ft^2/day are achievable in California with simple open-collector designs.
2. A low-cost, high-performance, liquid-to-liquid heat exchanger was tested with an overall heat-transfer coefficient in the range of 40 BTU/hr/ft^2/^{o}F. Leak-proof construction and longevity are important areas for future attention.
3. A projected 75% reduction in electricity use for air conditioning corresponds to an electric Coefficient of Performance (COP) equivalent of 14. By contrast, a high-efficiency rooftop package has a COP of 3.5.
4. Water requirements appear to be modest and do not add appreciably to the operating expenses. At $3/1,000 gallons, the cost for water is $18/ton/yr, a fraction of the cost for an electric air conditioning evaporator unit. If the entire California inventory of rooftop air conditioning switched to this approach, the annual water requirements would be 100,000 acre-feet. In contrast, California consumes 9.5 million acre-feet annually for urban uses.
5. Modeling, coupled with preliminary cost estimates for materials, labor, markups, and installation, indicates that the solar air-conditioning system has the potential to achieve installed costs of $2,000/ton, on par with the typical installed cost of efficient rooftop models.

The technical feasibility of a novel solar air conditioner incorporating low-cost materials has been proved. Simple heat and mass-transfer tests were performed with representative material samples. The measured properties were used to size and cost the system. Beyond the scope of this small grant, considerable work remains to scale up the subsystems; to test prototype systems for performance and durability in an outdoor environment; and to confirm cost estimates for manufacturing, distribution, and installation.

Benefits to California:

The primary benefit to the ratepayer from this research is increased affordability of electricity in California. The novel solar-air-conditioning concept would reduce the biggest cause of peak electricity demand. That would enable increased utilization of the generation, transmission, and distribution system and would delay new generating and transmission investments, lowering the cost of delivered electricity. Reducing peak demand also helps relieve congestion and improves the reliability of the power supply.

An economic solar air conditioner would also help California adopters of the technology control their energy expenses. The light commercial and small industrial sectors would best be able to utilize this technology. The electricity usage for rooftop air conditioning in California is 11.4 billion kWh per year. With energy savings of 75% projected, the displacement potential of solar air conditioning in these California sectors is estimated at 8.5 billion kWh annually. That corresponds to a demand reduction in the vicinity of 5.5 GW and a consumer cost savings of $1 billion per year.

Recommendations:

After taking into consideration (a) research findings in the grant project, (b) overall development status, and (c) relevance of the technology to California and the PIER program, the Program Administrator has determined that the proposed technology should be considered for follow-on funding within the PIER program.

Receiving follow-on funding ultimately depends upon (a) availability of funds, (b) submission of a proposal in response to an invitation or solicitation, and (c) successful evaluation of the proposal.

The solar air-conditioning concept is a novel approach that recognizes the importance of initial cost to economic viability and market acceptance. Although the scale-up of the concept, its durability, and its true cost remain uncertain, it merits funding for the next development step. Further work should address the following:

- Heat-exchanger design and fabrication techniques for low cost and high performance.
- Heat-exchanger material that is inexpensive yet durable for ten to fifteen years of operation.
- Collector subsystem design that meets the $70/ton material cost target yet is rugged enough to endure ten years of outdoor operation.
- Bench-scale system test to verify cooling capacity and parasitic electricity requirements.
- Following additional research and laboratory prototype testing, verification of the $2,000-per-ton installed target requires in-depth analysis of material, manufacturing, distribution, sales, and installation costs.

Project Status:

- 100% Completed.
- Completed on Schedule.
- Completed within Budget.
- Final Report Completed.
- Feasibility Analysis Report Completed.

Improvement of Rechargeable Li-ion Batteries Performance by Surface Modification of the Cathode

EISG Grant Number: 01-21
PIER Area: Renewables
Principal Investigator: Pieter Stroeve (530) 752-8778
Organization: University of California, Davis
Grant Amount: $75,000
Status: Completed

Project Description:
Rechargeable batteries are widely used as energy storage systems for renewable-energy technologies and power-quality systems. A battery system can give renewable-energy technologies around-the-clock viability by storing the electrical energy they produce for its most economical, strategic, and efficient uses. Batteries that combine high energy density with low cost and that are environmentally friendly would benefit the California renewable-energy market. Lithium-ion ($LiCoO_2$) battery technology offers higher energy density than most other commercial types, but at a generally higher cost per cycle. Lithium cobaltate batteries have been in commercial use since 1991. A new lithium-ion battery with different cathode chemistry (lithium manganate, $LiMn_2O_4$) has been identified as a possible replacement. It contains manganese (spinel) instead of cobalt and would be inherently safer and cheaper to produce. However, the spinel cathode has problems with capacity fading during cycling and with storage at elevated temperatures (55°–66° C). Specifically, capacity fading occurs during cycling because the crystal geometry weakens, especially in the cathode-surface region. At elevated temperatures, dissolution of the $LiMn_2O_4$ into the electrolyte enhances this process and leads to irreversible battery deterioration.

Resolution of issues relating to capacity fading would permit the manufacture of a high-performance battery at lower cost. The raw-material price of manganese oxide is $2.29/kilogram (kg), while cobalt oxide runs $39.60 to $41.80/kg. Lithium cobaltate batteries also incur the extra cost of a thermal protection circuit necessary to ensure safety during operation. Spinel is inherently safer, more environmentally benign, and less toxic than lithium cobaltate.

The principal investigator predicted that the use of surface-modified $LiMn_2O_4$ (SM-LMO) as the cathode material would alleviate or resolve the problems of capacity fading during cycling and after storage at elevated temperatures (55°–66° C). The researcher proposed to minimize surface degradation by surface modification on the molecular level. Specifically, the project used polymer-coated particles of $LiMn_2O_4$ to fabricate an experimental cathode. The principal investigator hypothesized that the polymer coating would inhibit Manganese (Mn+) dissolution at the surface and improve thermal stability at elevated temperatures, thereby extending battery life.

Proposed Outcomes:
The goal of this project was to determine the feasibility of using surface-modified $LiMn_2O_4$ (SM-LMO) as the cathode material to reduce capacity fading in a rechargeable lithium-ion battery by inhibiting Mn^+ dissolution at the surface and improving thermal stability at elevated temperatures (55°–66° C). The researcher established the following project objectives:

1. Finalize the methodology for two surface treatments of the cathodes.
2. Determine the surface chemistry for each cathode.
3. Demonstrate that Mn^+ dissolution can be reduced by 30% to 50% in the cathodes.
4. Demonstrate that capacity fading can be reduced by 30% to 50% in the cathodes.
5. Show from the research findings that a successful surface treatment can reduce the manufacturing cost of lithium-ion batteries by 10% to 20%.
6. Investigate the effect of surface modifications on the reactions at the cathode/electrolyte interface and on the mechanism of capacity fading.

Actual Outcomes:

1. Two methods of cathode coating were implemented: one way consisted in applying poly diallyldimethylammonium chloride (PDDA) on the $LiMn_2O_4$ pellet; the other way consisted in

applying a thin, molecular film on the $LiMn_2O_4$ powder before cathode fabrication. The investigation was limited to a PDDA solution-concentration range of 10 to 100 millimolar (mM) because the measured storage capacity for larger concentrations is lower than the untreated cathode. PDDA solution concentrations of 10, 20, 30, 50, and 100 mM were applied to the cathode pellet (weighing 8 mg) and powder (weighing 0.2 mg). For each of the PDDA concentrations investigated, more PDDA absorbed to the powder than the pellet.

2. Transmission electron microscopy (TEM) confirmed the existence of the polymer coating on the cathode surface. Scanning electron microscopy (SEM) showed that more PDDA absorbed on small $LiMn_2O_4$ particles than larger ones because the smaller ones have a larger relative surface area. Results indicate that capacity does not depend strongly on the thickness of the polymer layer.
3. The researcher did not quantify the reduction in Mn^+ dissolution.
4. Capacity stabilities of the PDDA-coated pellet and powder are 4.3±1.1% and 9.3±5.3%, respectively, after 5-10 charge/discharge cycles at room temperature. On average, the charge/discharge curves of the untreated PDDA-coated cathode after storage at 70° C for one week showed 18% to 20% loss of initial capacity. Diminished capacity after storage was about 12% and 6% for the PDDA-coated pellet and powder, respectively.
5. The findings do not specifically demonstrate that surface modification can reduce the manufacturing cost of lithium ion batteries 10%-20%. However, the researcher did note the wide difference in price of raw materials—manganese oxide ($2.29/kg) versus cobalt oxide ($39.60/kg to $41.80/kg). Additionally, PDDA can be used as a binder to reduce the amount of Teflon used in fabricating the cathode. That may further reduce cathode-manufacturing costs.
6. Cathode surface reactions were observed using *in situ* electrochemical atomic force microscopy (EC-AFM) at room and elevated temperatures. The measured capacity fading after storage decreased for coated cathode pellet and $LiMn_2O_4$ powder. Capacity fading measured on cathodes made of PDDA-coated $LiMn_2O_4$ was very small for cathodes obtained from powder coated in solution containing 30 and 50 mM PDDA.

Conclusions:

The researcher in this project provided a new approach to extending lithium-ion battery life. The data, while promising, are not sufficient to prove the feasibility of the concept.

1. Coating with a polymer film successfully modified $LiMn_2O_4$ nanoparticles used as active material in cathode fabrication. The coating method is sensitive to the initial powder dispersion and mixing procedure.
2. TEM, SEM and Energy Dispersive X-ray Analysis (EDAX) confirmed the formation of a thin polymer film on the surface of the $LiMn_2O_4$ nanoparticles. The Technical Reviewer indicated that the proposed model may be wrong because the results should have shown a strong relationship between cathode capacity and the thickness of the polymer layer.
3. The researcher did not specifically quantify the 30% to 50% reduction in LMO cathode Mn^+ dissolution; however, the researcher hypothesizes that the polymer coating protects the $LiMn_2O_4$ particle surface from the full contact with the electrolyte and possibly blocks surface reactions that are responsible for capacity fading.
4. The researcher did not meet his initial goal of reducing capacity fading by 30% to 50% in LMO cathodes. However, there was measurable improvement in capacity fading—approximately 6% to 14% with the SM-LMO cathode after storage at room temperature. The researcher hypothesized that the higher capacity loss for the coated powder might be the difference in its mixing properties. It would have been beneficial if measured charge/discharge cycling results (5-10 cycles) for the untreated cathode had been included in the report. Without this data it is hard to draw a comparison with the measured results for the treated cathode.
5. The researcher's claim of reduced manufacturing costs was based solely on the lower raw-material price for manganese oxide compared to cobalt oxide. The true manufacturing costs are difficult to substantiate at this point in the development process.
6. The *in situ* AFM observation of the cathodes at room temperature shows changes in surface topography that follow potential cycling. These are attributed to the lithiation/delithiation processes that accompany the change in potential during charge-discharge cycling. These changes are related to either Mn^+ dissolution or film formation on the cathode surface. The

researcher hypothesizes that the possible degradation mechanism is the reversible dissociation of the electrolyte salt lithium hexafluorophosphate ($LiPF_6$) to lithium fluoride (LiF) and phosphorus fluoride (PF_5). The PF_5 can, in turn, react with the manganese oxides on the surface to form manganese difluoride on the cathode and soluble products in the electrolyte. The soluble products in electrolyte could be phosphoryl trifluoride (POF_3) and difluorophosphate (PO_2F_2).

Benefits to California:
The employment of a lower-cost high-performance battery in the California market will enable renewable-power systems and energy storage systems to more effectively reduce peak demand on the electric grid, directly benefiting ratepayers. Potential energy and cost savings to ratepayers would result from reducing transmission losses in electricity delivery and extending both the service life of grid-system equipment and the time period between grid-system upgrades. In addition, environmental impacts of the California electricity supply and transmission and distribution system would be reduced. Since the technology is still far from commercialization, it is difficult to estimate the rate at which these benefits would accrue to California ratepayers.

Recommendations:
Further optimization of the polymer coating and more detailed characterization of the mechanism of capacity fading in $LiMn_2O_4$ cathodes during cycling and storage at elevated temperatures are needed. The researcher should consider the following recommendations upon commencement of additional work in this area:

1. Reinvestigate the relationship between the capacity and thickness of the polymer layer. Perhaps there should be a stronger relationship.
2. Refine the cathode coating method, specifically, initial powder dispersion and mixing procedure.
3. Determine the optimal amount of PDDA that will yield maximum stability of the modified cathode.
4. Draw a comparison of charge/discharge cycling results (after multiple cycles) for the untreated cathode versus the treated cathode. Investigate other performance parameters, e.g., charge/discharge rate, diffusion constant, etc.
5. Investigate further the mechanism of capacity fading during cycling and storage at elevated temperatures. Establish the nature of the cathode surface film formed following the potential cycle.
6. Develop new image-processing techniques for studying the local changes in cathode-surface topography.
7. Quantify reductions in manufacturing costs for spinel lithium-ion batteries as a result of using surface-modified $LiMn_2O_4$ cathodes.

Project Status:

- 100% Completed.
- Completed on Schedule.
- Completed within Budget.
- Final Report Completed.
- Feasibility Analysis Report Completed.

Integral Catalytic Combustion/Fuel Reforming for Gas Turbine Cycles

EISG Grant Number: 99-21
PIER Area: Environmentally Preferred Advanced Generation
Principal Investigator: Greg Jackson (301) 405-2368
Organization: University of Maryland
Grant Amount: $74,992
Status: Completed

Project Description:
The purpose of this project was to establish the basis for developing an integral catalytic combustor/steam reformer for producing H_2-rich reformate from natural gas while providing low nitrogen oxides (NO_x) air to a gas turbine. Applications include stabilization of ultra-low NO_x gas turbine combustors, pre-reforming fuel for solid oxide fuel cells, and consuming hydrogen-rich anode off-gas. Through solid-state heat conduction the integral catalytic combustor/steam reformer transfers heat from the catalytic combustion catalyst to the reforming catalyst. This reactor design allows combustion at high equivalence ratios and very high heat transfer rates to the reforming catalysts. These conditions enable conventional steam reformers to operate at standard temperatures, below 800°C. In this project the researcher optimized combinations of combustion and reforming catalysts in a laboratory-scale, flat-plate reactor. The researcher tested the catalyst combinations at atmospheric pressure to assess reactor operability.

These tests were also used to validate numerical models with detailed chemistry to establish the basis for reactor design and performance at the high-pressure conditions expected in actual applications. The project objectives included the development of a prototype reactor from these initial efforts. However, challenges in identifying stable catalyst combinations in the flat-plate reactor tests delayed the project and the prototype reactor was not built. Nonetheless, the project results provide a solid basis for the design and testing of a prototype reactor for ultra-low emissions combustion systems for gas turbines and fuel cell applications.

The researcher focused on the assessment of catalysts, design approaches, and reactor operability. The assessment was performed through the flat-plate reactor tests and numerical models validated with the flat-plate reactor data. The flat-plate reactor provided a simple geometry for assessing catalyst performance and heat transfer data to determine the necessary features of a full-scale reactor design.

Proposed Outcomes:
The goal of this project was to determine the feasibility of an integral catalytic combustor/steam reformer for producing hydrogen gas (H_2) rich reformate for ultra-low NO_x gas turbines from natural gas. The researchers established the following project objectives:

1. Identify preferred reliable catalyst combinations.
2. Test selected catalyst combination in flat-plate reactor to assess reactor performance.
3. Develop models for integral catalytic combustor/reformer design and operability.
4. Assemble and test a sub-scale prototype of integral reactor at high-pressure conditions.
5. Analyze reactor performance in advanced fuel cell/gas turbine cycles.

Actual Outcomes:

1. The researcher determined that high-activity reforming catalysts are needed (Rhodium (Rh)-based supported catalysts) to minimize the risk for thermal runaway of the catalytic combustion process. The high-activity Rh-based reforming catalysts provide adequate rates for endothermic steam reforming on one side of the reactor wall to permit catalytic combustion at relatively high fuel/air ratios. Without the heat transfer to the reforming catalyst, the catalytic combustion at high fuel/air ratios could result in over-temperature on the combustion catalyst surface. Rh-based reforming catalysts provide the necessary activity to sustain high conversion of methane (CH_4) to H_2 at temperatures < 800ºC and thereby

control combustion catalyst temperatures. Paladium (Pd) catalysts were chosen for the combustion side.

2. Flat-plate reactor tests demonstrated enhanced operability and low-temperature performance with H_2 combustion in comparison to CH_4 combustion using the preferred Pd-based combustion catalysts. These tests were performed with Rh reforming catalysts in the same reactor. For gas turbine applications, experimental results suggest the use of an integral reactor to convert a fraction of a CH_4 fuel stream to H_2/carbon monoxide (CO) would require a higher temperature combustion catalyst. However that catalyst should be less prone to deactivation than conventional Pd-based catalysts and require less low-temperature activity for
reactor start-up.
3. The numerical model established the operating parameters for operation under high-pressure conditions.
4. No prototype reactor was built. The researcher ran into time and fund constraints.
5. The results establish the potential for the integral reactor for sustaining catalytic combustion at low temperatures and for providing good volumetric efficiency for
H_2 production.

Conclusions:

1. The researcher identified an effective catalyst system for the integral steam reformer/catalytic combustor. The cost of the Rhodium catalyst may limit application of this system.
2. The integral reactor is well suited for burning fuel cell anode exhaust in fuel cell/gas turbine cycles.
3. The numerical model is available for commercial developers.
4. The next advance of this technology must include building and testing a
prototype reactor.
5. The flat-plate reactor experiments and the associated numerical models identified the ratio of moles of combustion fuel to moles of reforming fuel necessary to establish reliable steady-state reactor performance within catalyst temperature limits. The results also indicate the best reactor design would involve a co-flow system where the high combustion and reforming rates occur near the entrance to the reactor.

Benefits to California:

The ultimate success of this project in demonstrating operability of an integral reactor with stable catalyst temperatures for gas turbines with ultra-low emissions may provide a unique approach for gas turbines within California to set new "Best Available Control Technology" (BACT) standards. Successful development of the proposed integral catalytic combustor/steam reformer for natural gas will also provide technical expertise within the State for the emerging areas of solid oxide and molten carbonate fuel cell power plants. While it is difficult to quantify the future market for high temperature fuel cells and ultra-low emission gas turbines, it is clear that ultra-clean power generation will be required in California by 2007. The development of the integral reactor concept may provide a critical enabling technology for those power plants.

Recommendations:
Development of a prototype integral catalytic combustor/steam reformer for natural gas was not completed as proposed, but the project results and the design tools developed in this project provide the basis for completion. The experimental and numerical results establish the reactor as a viable approach for burning fuel cell exhaust to make additional H_2 for fuel cell operation. Based on the outcomes from this preliminary evaluation of this reactor concept, recommendations for further development are:

1. Demonstrate a prototype reactor at pressures of 5 atmospheres (atm) or higher.
2. Investigate the possibility of using new Pd-doped hexa-aluminate catalysts for operating temperatures > 900ºC with CH_4 as the combustion fuel.
3. Test for durability of preferred catalyst combinations at operating conditions.
4. Develop a reactor operation strategy for fuel cell/gas turbine power plants and more conventional gas turbine power plants.

Project Status:

- 100% Completed.
- Completed behind Schedule.
- Completed within Budget.
- Final Report Draft Completed.
- Feasibility Analysis Report Completed.

Method of Improving Efficiency of Combined Cycle Power Plants

EISG Grant Number: 00-28
PIER Area: Environmentally Preferred Advanced Generation
Principal Investigator: Robert Surette (323) 669-0072
Organization: Energy Constructs
Grant Amount: $63,500
Status: Completed

Project Description:
Large (>200 megawatt (MW)) gas turbine combined cycle power systems are the primary choice in California for new utility-scale power generation facilities. The cost of fuel for these systems is over 80% of their operating expense. While system efficiencies are often over 50%, any further improvement in engine efficiency reduces both the cost of the power and the emissions generated per megawatt-hour. Engineers note that turbine exhaust backpressure is a significant source of efficiency loss in gas turbine combined cycle (GTCC) power plants. Poor aerodynamics in the transition section between the gas turbine and the heat recovery steam generator (HRSG) is the source of this backpressure.

The cost of electricity generated by GTCC power plants is dependent on the heat rate of the engine system and cost of natural gas. If the heat rate is reduced (less fuel is used to generate each megawatt-hour) the cost to produce electricity will decline. The cost of electricity generated by GTCCs is in the range of 3.0 to3.7 cents/kilowatt hour (kWh) depending on system efficiency. A 0.5% increase in system efficiency (for the most efficient systems) could reduce electricity costs by 0.028 cents/kWh, saving Californians up to $18 million per year. Savings are based on all GTCCs in operation or under construction in the State being fitted with the ejector-diffuser.
Dynamic pressure recovery in turbine exhaust nozzles, which are subsonic, is limited by the onset of flow separation at an area ratio of the order of 1.5 to 1. By adding an ejector-diffuser, the total expansion ratio can be doubled without flow separation. Additionally, the ejector-diffuser can function as a suction pump that can be used to modify the boundary layer separation experienced in the transition section of the HRSG. The approach taken by this project was to quantify the benefits of the ejector-diffuser installed in the flow path between the exhaust diffuser of a straight-through gas turbine and the HRSG of a combined cycle power plant. The ejector-diffuser improves the aerodynamics and thereby reduces the backpressure on the gas turbine engine. Basically, the innovation is an annular plenum with ports to the exhaust flow. It surrounds the conventional exhaust diffuser. No air or steam flows through the plenum. The researcher proposed using computational fluid dynamic (CFD) modeling to model the ejector-diffuser in the flow duct in an effort to increase the stable expansion ratio and to improve the flow distribution. Prior one-dimensional analysis indicated savings on the order of 0.5 percent. The purpose of this study was to quantify accurately the savings, using state-of-the-art CFD analysis incorporating three-dimensional viscous flow, and separation phenomena.

Proposed Outcomes:
The goal of this project was to determine the feasibility of increasing GTCC efficiency by 0.5% using an ejector-diffuser to reduce the pressure losses in the transition section between a gas turbine exhaust diffuser and the heat recovery steam generator. The researcher established the following project objectives:

1. Demonstrate a reduction in backpressure at the gas turbine exit plane of 4 inches of water when compared with the conventional turbine to HRSG transition section (typically 12 to 16 inches of water). Backpressure reduction leads directly to engine efficiency improvement.
2. Demonstrate the potential for stabilizing the boundary layer in the transition section of the HRSG with the new technology. Flow separation should be reduced or eliminated to increase the turbine adiabatic expansion ratio. An increased expansion ratio leads to lower turbine backpressure.
3. Demonstrate an overall improvement in efficiency of 0.5% or more.

Actual Outcomes:

1. Calculations demonstrated backpressure reduction at the exit plane of the gas turbine to be over 4 inches of water.
2. The researcher demonstrated that the flow path more closely followed the duct walls resulting in an increase in the adiabatic expansion ratio by a factor of two.
3. The researcher demonstrated a 0.5% engine efficiency improvement.

Conclusions:

1. A properly designed ejector-diffuser can significantly improve the flow characteristics into the transition duct of a combined cycle gas turbine system. The diffuser increases the adiabatic expansion ratio by a factor of 2, which allows the nozzle exit plane pressure to decrease by about 4 inches of water.
2. The addition of a suction surface to the transition section causes the flow to follow the upper surface of the duct and therefore increase the turbine adiabatic expansion ratio. More work is required to investigate duct changes to induce the flow to turn the corner in the transition duct.
3. All gas turbine engines are sensitive to nozzle exit-plane backpressure. A 4-inch drop in exit pressure can produce a 0.5 percent increase in engine efficiency in the GE Frame 7FA engine. Ejectors can produce high levels of noise. This adds to the problem of noise reduction in any combined cycle plant. The researcher did not comment on this issue.
4. The researcher did not estimate the incremental capital and operating costs of adding ejectors. The device appears to be relatively simple to implement.

Benefits to California:

If the ejector-diffuser concept demonstrated in this project was applied to all large gas turbine combined cycle power plants operating or under construction in California, ratepayers would save from $6 million to a maximum $18 million per year. Maximum beneficial savings are based on 8000-hour annual operation. A GTCC typically runs less than 4000 hours/year. Savings would increase as more GTCCs are licensed in the State. Air quality would improve because less fuel would be consumed to produce the same amount of electricity. With lower demand for natural gas, prices for that commodity could be less volatile.

Recommendations:

A physical demonstration is required before significant interest can be generated in the optimized ejector-diffuser. The Program Administrator recommends a cold test in a model test facility as a first step of verifying the CFD model results. Upon successful completion of that test, the researcher should work with a real project and perform a hot test. The potential benefits of this research are great enough to continue public funding of the project through the cold test phase. At that point an HRSG manufacturer or a turbine manufacturer should begin to participate in the hot testing and commercialization of this technology.

The researcher should estimate the cost to build and operate an ejector-diffuser in a GTCC system.

Project Status:

- 100% Completed.
- Completed on Schedule.
- Completed within Budget.
- Final Report Completed.
- Feasibility Analysis Report Completed.

Omni SmartPump

EISG Grant Number: 99-12
PIER Area: Industrial/ Ag/ Water
Principal Investigator: Bernie MacDonald (707) 937-4352
Organization: Omni Instruments
Grant Amount: $75,000
Status: Completed

Project Description:
Current agricultural irrigation methods are energy inefficient. These methods use alternating current (AC) motors ranging from 50 to 80% efficiency to drive water pumps for water spraying or flooding methods that use twice the water needed. Hence moving this volume of water takes twice as much energy as is needed for water-efficient drip irrigation systems. Current drip irrigation systems that use single speed AC motors employ inefficient on/off cycling or complex and inefficient constant pressure plumbing strategies to maintain the required pressure. This project researched the application of high efficiency, variable-speed direct current (DC)-motor powered water pumps to drip irrigation systems to more efficiently achieve the optimal pressure needed. Such systems promise significant improvements in power use, water use, and labor costs in a wide range of agricultural scenarios.

The project focused primarily on the development of a grid powered high efficiency variable-speed DC motor capable of drip irrigating a 2-8 acre area. A secondary objective was to design the DC motor so that it could also be powered by renewable energy sources such as solar panels or wind generators that would charge a battery bank to support intermittent irrigation use. The project identified irrigation pump requirements, purchased compliant 150 gallons per minute (GPM) commercial centrifugal pumps, and designed and constructed 5 horsepower rare-earth permanent magnet blushless direct current (PMBLDC) motors mechanically configured to mate with the pumps. These units were designed and configured to maintain output pressure through a commercial transducer coupled to motor speed control circuitry.

The project assembled and tested four (4) systems. The DC powered drip irrigation systems ran reliably up to 40% of rated power for electro-magnetic and system functional evaluation. At higher power levels, the output switching devices (metal-oxide semiconductor field-effect transistor (MOSFET)) in the control circuitry failed catastrophically. This failure will require redesign of controller circuitry and incorporation of newer more robust switching devices, which are currently reaching the market. Although testing was stopped by the controller problems, the data generated from laboratory testing below 40% rated power was encouraging.

Proposed Outcomes:
The goal of this project was to determine the feasibility of using a variable speed DC motor in a drip irrigation system to achieve greater energy efficiency. The researcher established the following project objectives:

1. Determine the optimum size of an irrigation area on which to use a drip irrigation system having pressure controlled by a variable speed DC motor.
2. Design a 2 HP DC pump system that can be manufactured for $250 or less.
3. Incorporate into the design the capability to power the DC motor with a photovoltaic or wind turbine system with a battery bank that would sell for under $2,000.
4. Demonstrate reliable operation over the entire range of rated power.
5. Demonstrate a reduction in energy consumption of at least 30% over existing, single speed AC motor-driven drip irrigation systems.

Actual Outcomes:

1. The researcher determined a drip irrigation system needed to be capable of supporting an area of 2-8 acres.

2. The researcher concluded a 5 HP DC motor/pump system was needed to irrigate an area up to 8 acres in size. A 5 HP prototype system including the motor, controller, and pump was designed, fabricated, and tested. The project objective of demonstrating a system with a manufacturing cost of $250 or less was not met since the prototype motor failed above 40% load requiring a redesign. Redesign could impact the system manufacturing cost.
3. To prove this objective the researcher had to show that the DC motor/pump could be produced and sold for $500, and the renewable energy system could be added for less than $1500. Since the researcher was not able to show that the DC motor/pump could be produced and sold for $500, this objective was not met.
4. The output switching devices (MOSFET) in the control circuitry failed when operated above 40% of the rated power.
5. Due to motor controller failure above 40% rated power the prototype system was unable to demonstrate the projected energy savings of 30 to 50%. Below 40% rated power the prototype motor/pump system operated at 70-80% efficiency, which is only marginally better the 65% to 75% efficiency of the baseline single speed AC motor using on/off operation to maintain pressure.

Conclusions:
The researcher failed to prove the feasibility of developing a variable speed 5 HP DC motor/pump system for a drip irrigation application. The limited success of the prototype motor under partial load was encouraging but not sufficient to draw any firm conclusions about the potential for commercial success. Other conclusions are:

1. The researcher's conclusion that the proposed system would need to be capable of irrigating up to 8 acres was based on the size of a traditional farm plot, availability of appropriately sized 42-volt DC motors, and installation costs. The conclusion appears to be justified and sufficiently supported.
2. The proposed design of the 5 HP DC motor and controller has serious design flaws that cause catastrophic failure of the motor controller above 40% load. The researcher was unable to determine the exact cause of the failure leaving open the possibility that the problem is either centered in the motor controller circuit or is related to an interaction between the new motor design and control circuit. A redesign of the control circuit and possibly the motor design as well will have an unknown impact on the projected cost of the system. As a result, no firm system cost estimate can be made at this time. The researcher believes that recent advances in fuel cell automobile systems will provide the necessary low-cost solutions to the technical problems encountered that will eventually allow the system to be manufactured for $250.
3. The researcher's claim that the proposed motor/pump system could be purchased and powered by a small renewable energy system for $2,000 was only partially supported. The Program Administrator concurs that a small renewable energy system could be installed for the projected $1,500 cost that would be sufficient to pump 6000 gallons in one hour with a less than 10-foot lift, once a day. However, the projected manufacturing cost of the motor/pump system for $250 with a retail cost of $500 was not supported by the project findings.
4. System reliability is extremely important in any commercial irrigation system. A farmer cannot afford to install an irrigation system that might not sustain his crops. This issue must be addressed before the proposed system can be commercialized.
5. No firm conclusion can be drawn regarding energy savings based on the proposed system design. The researcher claimed some limited energy savings when the prototype motor operated under partial load in a laboratory setting but the type of data collected was not sufficient to support any solid claims in this area. No field-testing was conducted under actual operating conditions.

Benefits to California:
It is difficult to quantify the overall beneficial savings without serious market projections, but individual user savings can be quantified and extended into the larger market. A single user would accrue a minimum reduction of 2 kWh/day and a water savings of 6000 gallons, every 2-day watering cycle, which accrues to 180 kWh and 540,000 gallons of water in a 6 month season. A conservative estimate would be 100 kWh and 100,000 gallons per season. This in itself would be of real value and would be compounded if local power generation (solar, wind) were utilized.

On a smaller scale, a farmer may be able to purchase 300 watts of solar panels with batteries for $1500 to $2000 to completely remove this energy load from the grid. That system could generate, store, and apply up to 2 kWh per day of energy to irrigate over 10 acres with no other energy inputs.

In a larger sense, because it removes this energy load from the grid, all Californians benefit when a renewable energy powered water transport system is available to fill the needs of agricultural irrigation and other related water needs. In addition to irrigation, the pump system developed in this project could fill other needs requiring efficient water movement in areas that have limited grid power availability.

Recommendations:
The Program Administrator has determined that the project failed to prove the feasibility of using high-efficiency DC motors for driving drip irrigation pumps to reduce electricity use in agricultural applications. The fact that the prototype system was able to operate efficiently up to 40% rated power is encouraging but insufficient to establish technical or commercial feasibility. The Program Administrator recommends that any future R&D development of this concept be contingent upon addressing the following concerns:

- Identify the exact cause of failure above 40% load and redesign the motor controller and motor, if necessary.
- Show evidence of a clear market connection by teaming with a motor/ pump manufacturer.
- Substantiate the energy savings of the variable speed DC motor over existing variable speed AC motors that could be adapted to drip irrigation systems.

Project Status:

- 100% Completed.
- Completed on Schedule.
- Completed within Budget.
- Final Report Completed.
- Feasibility Analysis Report Completed.

Omni-Directional Insect Eye Concentrator Using a Hyper-Spectral Photovoltaic Cavity Converter (PVCC)

EISG Grant Number: 00-13
PIER Area: Renewables
Principal Investigator: C. Wood Hays (760) 744-2575
Organization: United Innovations, Inc.
Grant Amount: $74,992
Status: Completed

Project Description:
California's potential to generate electricity using solar photovoltaic (PV) technology is enormous. High first cost continues to limit rapid deployment of this technology. It is very important to reduce the consumer's first cost of solar electricity (currently around $6/watt installed) to encourage greater deployment of solar PV generation. In addition, recent legislation demands that investor-owned utilities provide 20% of their power from renewable sources by 2017.

The objective of this project was to develop a low-cost solar photovoltaic concentrator to achieve solar concentrations of 50 suns. The solar collector was modeled on omni-directional insect eye optics. Minimal tracking requirements were anticipated. The researcher projected the new solar concentrator optics would require fewer highly efficient solar cells than non-concentrating systems. This could mitigate the otherwise unacceptably high cost of current efficient cells. The associated receiver optical system is much less expensive than the solar cell materials it would replace. The researcher projected a reduction in cost for PV systems to less than $3/watt upon successful completion of this project. The proposed concept combined omni-directional "insect eye" optics with a photovoltaic cavity converter (PVCC). A spectral splitting process inside the PVCC used Rugate filters deposited on high-efficiency solar cells to maximize the use of the available solar spectrum and to boost conversion efficiency. Commercial and residential rooftop applications are the anticipated final target of this project.

The PVCC module contained an array of discrete concentration/conversion units that operated independently. These units were electrically connected in series and in parallel to achieve the required open-circuit voltage and short-circuit current for the module. Each unit had upward-looking multi-facetted optics that resembled the compound eye of an insect. Each individual facet concentrated the solar flux and injected it into a spherical cavity shared by all facets in the PVCC module. The assembly of the facets collectively provided a large acceptance angle for each insect eye that minimized or eliminated tracking requirements. The spherical cavity (PVCC) contained the cells that were attached to its interior surface. The PVCC trapped the concentrated light it received from all facets in that unit and split the solar spectrum into discrete frequency bands. The cells inside the cavity consisted of four different groups, all from the III-V family. The spectral response of each group is different, but together they span the solar spectrum.
Each cell group was covered with a conjugate Rugate filter that screened the photons, so that the photons with matching energy (frequency) passed directly to the detector, and the remainder were reflected. This "spectral screening" process inside the cavity optimized the conversion efficiency, as it allows the photons to be captured in the proper cells with full utilization of the solar spectrum.

Proposed Outcomes:
The goal of this project was to prove the feasibility of using multi-faceted optics as a solar concentrator and an optical cavity containing multiple, spectrally selective (Rugate) filters to economically capture portions of the solar energy, sending each portion to a detector tailored to a specific frequency range. The overall goal was to develop a solar energy conversion device with very high efficiency and low cost. To accomplish this goal the researcher established the following objectives:

1. Create an optical system with a Photon Utilization Factor (PUF) in the cavity greater than 0.9. The PUF is the probability of a photon entering the cavity to be captured in a matching converter cell.

2. Select four candidate materials from those in the III-V group that span the solar spectral range for the sub-cell photon converters.
3. Achieve composite field of view of +/- 30 degrees and light throughput efficiency of the facetted insect eye optics of at least 80%.
4. Achieve solar flux concentration ratio inside the cavity greater than 30 suns.
5. Determine the optimum operational cell temperature.
6. Achieve overall performance of the proposed system of >38% @ 25° C.
7. Develop a low-cost manufacturing process to achieve system costs of less than $3/watt.

Actual Outcomes:

1. The researcher measured the Photon Utilization Factor (PUF) in the cavity at 0.806.
2. The researcher identified four candidate materials (III-V) for the sub-cells: InGaP, GaAs, InGaAsP, and InGaAs. (In-Indium, Ga-Gallium, As-Arsenic, P-Phosphorous) Their transmission frequency bands are, respectively, 350-650 nm, 650-850 nm, 850-1050 nm, and 1050-1800 nm.
3. Maximum composite field of view was +/- 30 degrees off normal. Light throughput efficiency of the facetted (insect eye) optics was 63%.
4. Highest solar flux concentration ratio inside the cavity was just over one tenth of a sun, that is, it was 0.11 suns.
5. The researcher determined the operational cell temperature to be 65^{0} C @ 25^{0} C and 50 suns.
6. The researcher calculated the overall performance of the system at 22.27 % @ 25^{0} C and 50 suns.
7. The researcher provided insights into potential low-cost manufacturing steps for the system. They included nickel electroforming for the faceted optics. For the cavity, the researcher suggested spin forming of aluminum.

Conclusions:

1. While not meeting the stated objective, the researcher was successful in achieving relatively high PUF.
2. The researcher identified four materials that span the spectral range necessary to achieve high photon-conversion efficiencies.
3. The researcher met this stated objective for the optical field of view.
4. The maximum solar concentration achieved was vastly lower than the objective. This discrepancy was caused by a physical mismatch of the concentrating optics and the receiver cavity. Continuing R&D to achieve the objective of 30 to 50 sun concentration would be considered high risk R&D.
5. The researcher met his stated goal of determining the optimum operational cell temperature.
6. The overall system performance was impaired by the lack of solar concentration. Calculations showed that the photovoltaic converter cavity with the four sub-cells could operate at a cavity efficiency of 47%. The researcher also calculated the efficiency for a total solar system using his photovoltaic cavity converter and a tracking dish concentrator at 38%. If this efficiency could be achieved in practice it would be a major success.
7. Without the benefit of multifaceted optical concentrators, no savings in system cost could be realized. Therefore, the cost of solar electricity could not be reduced with the proposed system. However, there remains the potential that the revised system using a tracking dish concentrator could provide highly efficient and economical solar-derived electricity.

Overall this project did not prove the feasibility of the proposed system as a whole. However, the PVCC unit that converts the concentrated solar energy into electricity worked quite well. Unfortunately the extremely low concentration caused by a geometrical (structural) constraint in the design of the facetted optics represents a major problem. In his final report the researcher proposed coupling his successful, photovoltaic cavity converter to a tracking dish concentrator. The Program Administrator concludes that this could be highly successful.

Benefits to California:

Concentrating solar systems have the potential to provide significant benefits to the ratepayers of California. However the multifaceted optical concentrator in this project did not provide the desired solar concentration. The selective filter receiver (PVCC) may have benefits if coupled to a more effective concentrator. Quantifiable benefits can only be determined once that system is designed and demonstrated.

Recommendations:
The extensive R&D required to resolve the problems involving the facetted optics represent too high a risk and should not be pursued. However, the valuable PVCC knowledge obtained in this project could be used in conjunction with a parabolic dish concentrator to form a Dish/ PVCC system. Such a system circumvents the problem of low concentration in the facetted optics and allows the PVCC conversion approach to reach higher performance. The researcher has received additional funding from a federal agency to pursue that concept. The Program Administrator recommends that Californians interested in the deployment of high-efficiency solar-energy systems monitor the progress of this potentially valuable concept.

Project Status:
- 100% Completed.
- Completed on Schedule.
- Completed within Budget.
- Final Report Completed.
- Feasibility Analysis Report Completed.

OTM Aided Oxygen Enhanced Combustion

EISG Grant Number: 00-29
PIER Area: Environmentally Preferred Advanced Generation
Principal Investigator: Theodore Tsotsis (213) 740-2069
Organization: University of Southern California
Grant Amount: $75,000
Status: Completed

Project Description:
Modern combustion turbines in California power plants use lean, premixed combustion to significantly reduce air pollution from oxides of nitrogen (NO_X) and carbon monoxide (CO). The flame stability in the combustor limits the degree to which NO_X can be reduced. If the turbine is excessively starved for fuel, it will stop running. Before flame extinction occurs, flame instability causes a phenomenon called "rumble," which results in serious damage to the engine. This introduces a practical lower limit on how lean the fuel-air mix can be, called the "lean limit." That in turn results in NO_X production that cannot be lower than a certain minimum for any given combustion turbine using air as the oxidizer.

California power plants could reduce the creation of NO_X pollutants if the flame stability was improved to produce a lower lean limit. Further, improved flame stability could reduce damaging turbine "rumble" and life-limiting hot spots at the turbine inlet. Since even the cleanest gas-turbine power plants can produce over 200 tons per year NO_X per 500 megawatts (MW), there is a great incentive to reduce the quantity of this pollutant going into the atmosphere. Additionally, improved flame stability can result in high engine efficiency.

Engineers have shown that adding oxygen to the combustion air (oxygen-enhanced combustion (OEC)) results in stable combustion at a lower lean limit. The key challenge facing OEC is the significant cost of oxygen enrichment. This project studied the feasibility of using dense, high-temperature, solid-oxide membranes (oxygen-transport membranes (OTM)) to produce oxygen *in situ,* thus improving the quality of the combustion air. The researcher proposed using high-quality oxygen-transport membranes and waste heat from the exhaust-gas stream to obtain the oxygen.
Modern combustion turbines in California power plants use lean, premixed combustion to significantly reduce air pollution from oxides of nitrogen (NO_X) and carbon monoxide (CO). The flame stability in the combustor limits the degree to which NO_X can be reduced. If the turbine is excessively starved for fuel, it will stop running. Before flame extinction occurs, flame instability causes a phenomenon called "rumble," which results in serious damage to the engine. This introduces a practical lower limit on how lean the fuel-air mix can be, called the "lean limit." That in turn results in NO_X production that cannot be lower than a certain minimum for any given combustion turbine using air as the oxidizer.

Proposed Outcomes:
The goal of this project was to determine the feasibility of using oxygen-transport membranes to produce oxygen *in situ* for use in an OEC combustor for gas-turbine electricity generation. The researchers established the following project objectives:

1. Determine the technical feasibility of coupling oxygen-transport membranes (OTM) with oxygen-enhanced combustion (OEC). Determine stability characteristics of membranes in the OEC environment.
2. Determine the combustion stability of the OTM/OEC hybrid concept.
3. Determine the formation of pollutants, with particular emphasis on NO_X emissions. Quantify the potential for attaining NO_X emissions in the single-digit parts per million (ppm) range.
4. Determine combustion-stability and pollutant-formation characteristics for oxygen lancing. This is one of the techniques industry uses for the implementation of OEC.
5. Determine the potentials of the OTM/OEC technology for improving the efficiency of gas turbines to values in excess of 35%.

Actual Outcomes:

1. The researcher prepared a number of dense solid-oxide oxygen-conducting membranes made of $SrCo_{0.5}FeO_3$ perovskite material, and tested them for oxygen-permeation characteristics. The researcher also tested them under both inert and reactive conditions. The membranes prepared showed satisfactory oxygen permeability and good stability during the permeation studies, both in the presence of inert and reactive sweeps.
2. Oxygen (O_2) addition increased laminar flame speed and, therefore, enhanced flame stability. This was due to the progress of the branching reaction as the O_2 concentration increased.
3. Analysis of the NO_X structures revealed that O_2 enrichment resulted in reduced NO_X production for the same flame temperature. Single-digit NO_X production was not reported. Oxygen addition appeared to limit the emission of other pollutants. Studies of fuel-rich flames, for example, revealed a significant reduction of the maximum CO mole fraction, $(X_{CO})_{max}$, as X_{O2} increases for flames with constant T_{max}. This reduction was due to the interaction downstream of the premixed flame between the fuel-rich premixed and the non-premixed flame.
4. Both theoretical and experimental data showed that oxygen lancing beneficially reduced CO/NO_X emissions when oxygen-enhanced and non-enhanced tests were run with the same maximum flame temperature.
5. Design calculations indicated that turbine efficiencies as high as 46% can be achieved through the implementation of OTM/OEC technology. The degree of improvement is difficult to discern, since the efficiency of the engine under evaluation appeared to be between 42% and 43% before the addition of the OTM/OEC technology.

Conclusions:

1. These membranes are highly permeable to oxygen under conditions similar to those in the OEC combustion environment. The researcher showed oxygen permeability of these membranes under reactive conditions to be significantly higher than those attained in inert environments.
2. Results on flame propagation demonstrated that oxygen enrichment could enhance combustion stability: the same flame temperature increased laminar flame speeds and extended flammability limits. This was caused by the effect of oxygen concentration on the main branching reaction $H+O_2 > OH+O$. Under certain enriched conditions, the researcher found that oxygen addition acted as a heat sink to reduce flame temperatures. Higher oxygen concentration also increased laminar flame speed, thus enhancing the progress of the branching reaction.
3. Analysis of the NO_X structures revealed that oxygen enrichment can reduce NO_X production for the same flame temperature. Lower NO_X production is caused by the synergistic effect of reduced flame temperature and reduced nitrogen (N_2) concentration.
4. The researcher found a significant reduction of the maximum CO mole fraction, $(X_{CO})_{max}$, as X_{O2} increased for flames with constant T_{max}. The researcher hypothesized that this reduction comes from the interaction between the fuel-rich premixed and the non-premixed flame established downstream of the premixed flame. More specifically, the reduction of the equivalence ratio required to maintain a constant T_{max} as X_{O2} increases, is responsible for the reduction of both $(X_{CO})_{max}$, and $(X_{NOx})_{max}$.
5. Design calculations indicated that turbine efficiency increased with the degree of oxygen enrichment. That depended on the quality of membranes utilized. Membranes with poor separation characteristics or lower permeability showed poor performance, as their operation required additional energy beyond the available waste heat. In fact, use of inferior-quality membranes was likely to result in a decrease in turbine efficiency.

Oxygen-enhanced combustion is a proven technique. This project was undertaken in order to prove the feasibility of using oxygen-transport membranes to produce oxygen *in situ* for use in oxygen-enhanced combustion for gas turbines. The fundamental feasibility of this concept has been proven. OTMs can function in conditions similar to the OEC environment. It remains to be seen if OTMs can extract a sufficient volume of oxygen from the exhaust stream at a high enough rate to be useful in the gas turbine.

Benefits to California:
The primary benefit to the ratepayer from this research is increased affordability of electricity in California. The researcher projects at least a 1.5% increase in the efficiency of gas turbines and a 20%–60% decrease in NO_X emissions for those turbines using lean, premixed combustion. The baselines for these estimates are not clear, therefore it is not possible to estimate the overall impacts on the California ratepayer.

Other researchers have shown that oxygen-enhanced combustion in gas-turbine engines results in higher turbine efficiency or lower levels of NO_X and CO emissions. This study demonstrated that similar results can occur when high-quality oxygen-transport membranes and waste heat are used to obtain the oxygen from the exhaust-gas stream. This could benefit the ratepayer through a low-cost implementation of oxygen-enhanced combustion resulting in higher turbine efficiency or lower levels of regulated emissions.

Recommendations:
The use of solid-oxide membranes in power-generation applications has been proven technically feasible. In order to bring the technology to the commercial stage the following tasks should be conducted:

1. Develop inexpensive, tubular, solid-oxide membranes and demonstrate the OTM/OEC concept in a scaled-up membrane reactor/combustor configuration.
2. Test the long-term (>1 year) stability of tubular membranes.
3. Carry out an extensive economic evaluation of the technology, including a detailed market survey.

After taking into consideration: (a) research findings in the grant project, (b) overall development status, and (c) relevance of the technology to California and the PIER program, the Program Administrator has determined that the proposed technology should be considered for follow-on funding within the PIER program. Receiving follow-on funding ultimately depends upon: (a) availability of funds, (b) submission of a proposal in response to an invitation or solicitation, and (c) successful evaluation of the proposal.

Project Status:

- 100% Completed.
- Completed on Schedule.
- Completed within Budget.
- Final Report Completed.
- Feasibility Analysis Report Completed.

Polymer-Zeolite Nanocomposite High-Temperature Proton-Exchange-Membranes for Fuel Cells

EISG Grant Number: 00-31
PIER Area: Environmentally Preferred Advanced Generation
Principal Investigator: Yushan Yan (909) 787-2068
Organization: University of California, Riverside
Grant Amount: $75,000
Status: Completed

Project Description:
Natural gas fueled gas turbine combined cycle power plants are the primary choice for new power plants in California because they can achieve much higher thermal efficiency and lower air emissions than coal- or distillate-fired units. Reducing pollutant emissions of nitrogen oxides (NO_x), and carbon monoxide (CO) to meet California's increasingly stringent air quality regulations remains a significant concern. Advanced generation technologies that improve efficiency and significantly reduce NO_x, CO and carbon dioxide (CO_2) emissions are in demand. Proton Exchange Membrane (PEM) fuel cells are potential candidates for residential distributed power production. Nafion is the most commonly used proton-exchange membrane in PEM fuel cells, but its economic viability faces significant technical roadblocks. Among these problems are: water management at the electrodes; CO poisoning of the anode catalyst; slow cathode kinetics; and the high cost of the platinum electrode catalyst.

If these difficulties were solved, PEM fuel cells could be used for added generation capacity both in distributed generation and at the central power plant. Cells using pure hydrogen produce almost zero regulated emissions, only water and heat. Additionally, Carnot's principle, which applies to and limits all heat engines, does not affect fuel cells because the electricity is generated by an electrochemical reaction.

Figure 1 illustrates the use of a PEM fuel cell in a residence. Lower energy use and a cleaner technology will reduce emissions. Actual reductions will vary depending on the air-pollution baseline in any given area.

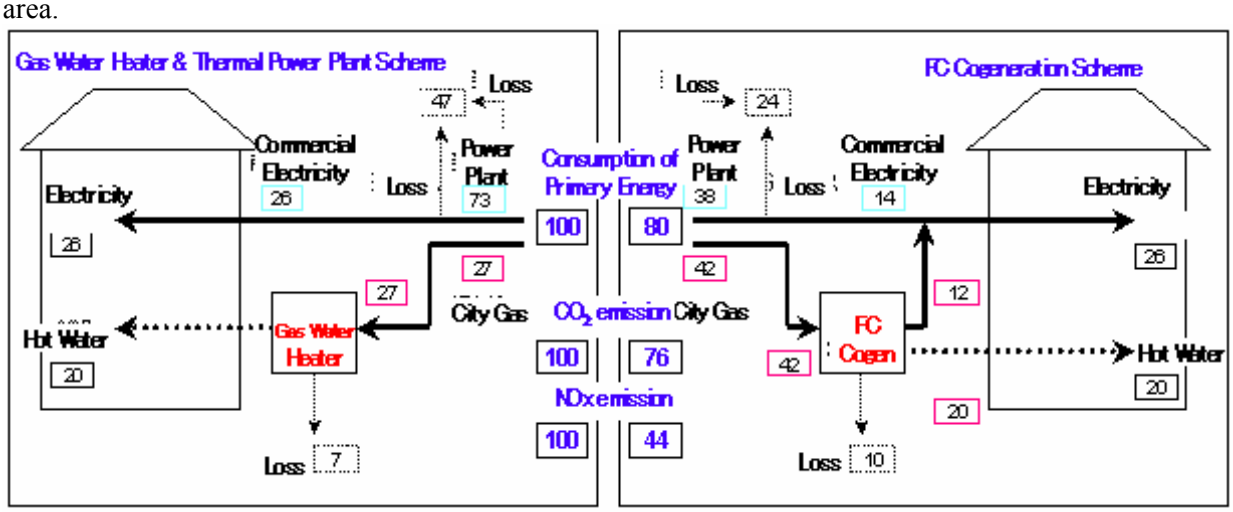

Figure 1. The left side shows a conventional combination of gas-heated water and grid electricity from a thermal power plant. The right side introduces cogeneration into the system by means of a proton-exchange-membrane (PEM) fuel cell. The expected benefits include reductions of 20% primary energy consumption, 24% CO_2 emission, and 56% NO_x emission.

The researcher in this project predicted that the problems associated with Nafion membranes could be eliminated or alleviated once the operating temperature of the PEM fuel cell exceeds 100°C. Above boiling point, water would not flood the cathode and thus prevent the oxygen from reaching the cathode catalyst. On the other hand, Nafion is an excellent proton conductor only when it is fully hydrated. To achieve a 100°C operating temperature, the researcher proposed using zeolite nanoparticles as an additive to Nafion to improve its water retention and cited several published research papers suggesting that zeolites functionalized with sulfonic groups will have comparable or superior proton conductivity to Nafion at high temperatures and low humidity. Because the local hydration and proton conductivity

within the nanoparticles should be higher than in Nafion, the researcher hypothesized that the bulk properties of the Nafion with the nanoparticles would improve. The researcher suggested that nanoparticles would interrupt
the host matrix less than micron-sized particles and result in improved mechanical properties of the host.

Proposed Outcomes:
The goal of this project was to determine the feasibility of using a zeolite nanoparticle additive to Nafion to improve its water retention and proton conductivity at high temperatures (120 – 150°C). The researcher established the following project objectives:

1. Synthesize mono-disperse zeolite X and/or Y nanocrystals with diameters controlled between 15 to 80 nm in diameter. Prepare uniform Nafion-zeolite X and/or Y nanocomposite membranes.
2. Demonstrate higher water adsorption capacity and proton conductivity in the Nafion-zeolite nanocomposite membrane at high temperatures (120 – 150°C) than those properties of the bare Nafion membranes at 80 °C.
3. Show that a PEM fuel cell system will be over 40% efficient with a 20% reduction of primary energy consumption and 24% and 56% reductions of CO_2 and NO_x emissions, if the proposed high-temperature membrane is successfully developed and integrated into a fuel cell system.
4. Show that the projected cost of a PEM fuel cell power system will be reduced to $600 to $700/kW from the current +$1000/kW if the proposed high-temperature membrane is successfully developed and integrated into a fuel cell system.
5. Formulate a Nafion bi-functional silica nanocomposite membrane and test for water adsorption and proton conductivity.

Actual Outcomes:

1. The researcher synthesized zeolite Y nanocrystals with a mean diameter of 32 nm and developed a new fabrication method that avoids agglomeration of the particles. The researcher prepared Nafion-zeolite Y nanocomposite membranes with 10% by weight zeolite loading.
2. The Nafion-zeolite nanocomposite membrane had slightly higher proton conductivity at 80°C than recast bare Nafion at 80°C. No tests were reported in the 120-150°C range.
3. Although the researcher's proposal cited work done by Tokyo Gas Company to demonstrate this objective, the work was apparently not augmented to evaluate efficiency and emissions objectives during the performance of this project.
4. The researcher did not address the potential cost reduction of a PEM fuel cell system based on the data generated in this project.
5. The researcher formulated a Nafion bi-functional silica nanocomposite membrane. Water adsorption and proton conductivity of the Nafion-silica material were somewhat superior to bare Nafion. The researcher hypothesized that the Nafion-silica nanocomposite membranes could maintain high water uptake at high temperatures.

Conclusions:
The researcher in this project provided a new approach to reducing the cost of a PEM fuel cell by extending its operating temperatures. The data, while suggestive, do not appear sufficient to prove the feasibility of the concept.

1. Zeolite nanoparticles with a mean diameter in the range 15 to 80 nm can be fabricated and uniformly distributed in a Nafion membrane.
2. This project set no precise goals for water adsorption and proton conductivity. Its gains were minor but encouraging. Since no testing was reported in the 120 – 150°C range the Program Administrator cannot determine if the objective was met.
3. The researcher did not present any new information that would support claims of reduced power consumption and emissions.
4. Because the researcher did not provide any information, the Program Administrator cannot speculate on the possible cost reductions of PEM fuel cell systems.
5. Nafion with silica nanoparticles may offer promising high-temperature properties for PEM fuel cells.

Benefits to California:
The primary potential benefit to the ratepayer of this research would be reduced environmental impacts of the California electricity supply and transmission and distribution system. If the technology evaluated in this project were proven, developed into a commercial product, and applied to a residential energy system, it could reduce primary energy use by up to 20%. Savings result from the use of the fuel cell heat for residential water heating and from the reduction of transmission losses in electricity delivery. Since the technology is still far from commercialization, it is difficult to estimate the rate at which these benefits would accrue to California ratepayers.

Recommendations:
Further optimization and more detailed characterization of the Nafion-zeolite nanocomposite membranes and/or the Nafion-silica membranes are necessary to develop the concept into a commercially viable product. The nanocomposite membranes have to be coupled with appropriate electrodes into the configuration of a membrane electrode assembly (MEA) so that the composite membrane concept can be tested in a fuel cell configuration.

The following questions should be considered before beginning additional work in this area:

1. Is there an advantage to the incorporation of mono-disperse zeolite nanoparticles as used? A distribution of particle sizes could be less expensive.
2. What is the mechanism that causes the nanoparticles to enhance macroscopic proton conductivity in the composite membranes? The particles are likely isolated in the Nafion matrix and therefore disconnected from each other. While local hydration and proton conductivity within the nanoparticles should be higher than in Nafion, it is not clear that these should contribute to increasing the water adsorption or proton transport properties of the bulk composite. The mechanism of proton conduction across the nanoparticle Nafion interface is an important and likely limiting process step that should be examined more thoroughly.
3. Based on the proton conductivity results reported, the conductivities of the Nafion-zeolite membranes are slightly above "recast" Nafion and below that of commercial Nafion. These preliminary results appear not to be particularly promising for a significant improvement of PEM conductivity properties. What are the obstacles and how might they be overcome?
4. What are the economics of powering individual residences with fuel cells? Do the reliability and economics improve when several residences and small businesses are aggregated into micro-grids?

Project Status:

- 100% Completed.
- Completed on Schedule and within Budget.
- Final Report Completed.
- Feasibility Analysis Report Completed.

Proof-of-Concept of a Dual-Fired (Solar and Natural Gas) Generator for Use in a Space Cooling System for Residential and Commercial Buildings

EISG Grant Number: 01-06
PIER Area: Buildings End-Use Energy Efficiency
Principal Investigator: Michael A Garrabrant (740) 967-3006
Organization: Cooling Technologies, Inc.
Grant Amount: $75,000
Status: Completed

Project Description:
Many residential and light commercial buildings utilize vapor compression air conditioning technology for space cooling. These devices require significant power (~1.25 kilowatts (kW)/ton depending on size and age of the air conditioning unit) and are large contributors to residential and commercial peak electric demands. According to Department of Energy data, residential buildings in the U.S. consume 1.62 quads for space cooling and virtually all of this energy is supplied by grid-connected electrical equipment. Most metropolitan areas of the U.S. are experiencing significant electric demand and supply imbalance during the summer months due to the increasing use of air conditioning equipment. Solar energy cooling systems would avoid significant amounts of electric energy normally required for space cooling.

Cooling Technologies, Inc. has developed, adapted and tested a new dual-fired (gas-solar) generator for their 5-ton ammonia-water (NH_3-H_2O) air-cooled absorption chiller. The generator is a simple adaptation of their standard gas-fired chiller generator, which minimizes the extra cost associated with the solar/gas product. With dual-fire capability, the need for thermal storage or back-up systems is eliminated. Two prototype generators were developed and tested as part of a breadboard chiller.

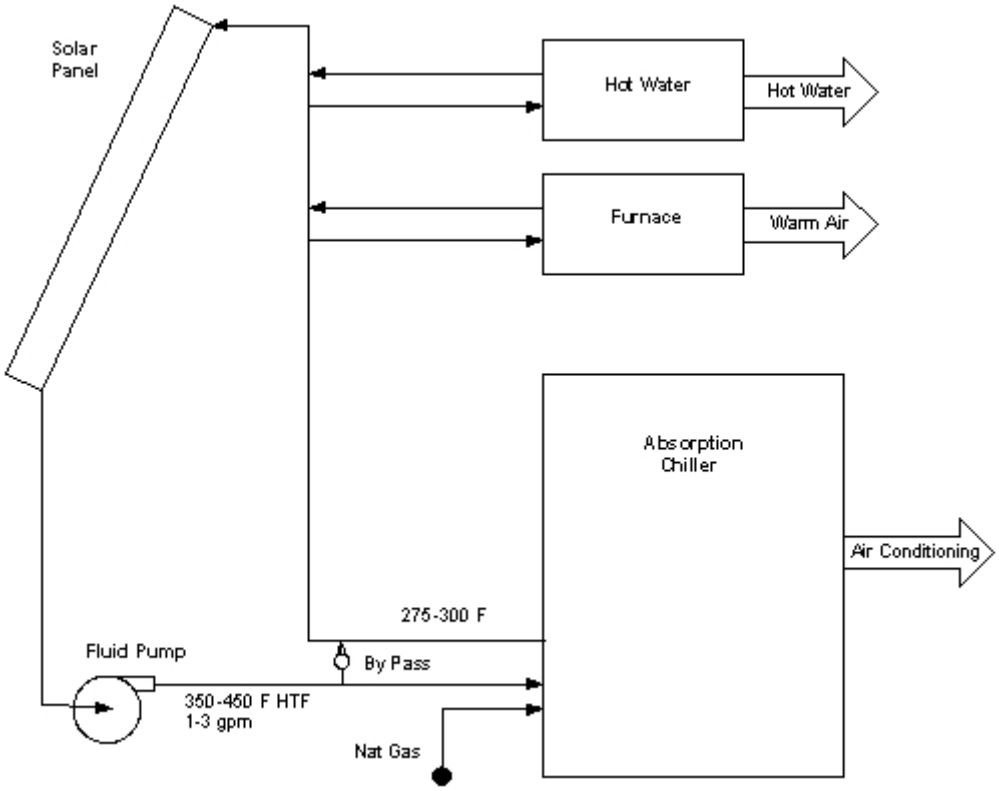

Solar HVAC System w/Dual-Fired Absorption Chiller

The system differs from previous solar-powered cooling systems in many respects:

1. Small Size: the system targets the residential, multi-family, and light commercial markets (3-25 Refrigeration Tons).
2. Air-Cooled: the cooling system is air-cooled and therefore does not require expensive and difficult to maintain cooling towers.
3. Dual-Fired: the cooling system is able to operate on either or both solar energy and natural gas or propane, an important feature for practical, affordable systems.

Proposed Outcomes:
The goal of this project was to prove the feasibility of a dual-fuel (solar/gas) generator for a standard 5-ton NH_3-H_2O air-cooled absorption chiller. The specific research goals were the following:

1. Design, fabricate and test a dual-fired (solar/gas) generator for a 5-ton ammonia-water absorption chiller. The design is a modification to the geometry of an existing Cooltec generator in order to minimize product cost.
2. Demonstrate that the heat exchanger is capable of heating the working fluid (ammonia-water) up to an operating temperature of 375 °F, given a solar source temperature of 450°F.
3. Demonstrate that the dual-fired generator, when coupled to the other components of a 5-ton absorption chiller, is capable of producing 5-ton of cooling at the standard ARI conditions (95 °F ambient, 55 – 45 °F chilled water).
4. Operate the breadboard chiller while firing the generator on both simulated solar energy and the combustion of natural gas simultaneously in order to provide guidance for the packaged prototype control system logic specification.

Actual Outcomes:

1. The generator, as tested, is a modification of Cooltec's standard gas-fired generator used as part of their 5-ton chiller by the addition of a heat transfer surface to the outside shell of the generator. The model was verified and calibrated based on the experimental data and can be used to fine tune the generator design for the next development stage.
2. The dual-fired generator prototypes, when fired by hydronic fluid, were able to heat the generator bottom temperature up to the target operating temperature with hydronic inlet temperatures of 460°F and above. Generator temperatures were within 12% of the target at nominal 400°F hydronic temperatures. The prototypes retained their ability to reach full operating temperatures when gas-fired.
3. At 95°F ambient conditions and 55°F return chilled water temperature, the breadboard chiller achieved full cooling capacity with hydronic temperatures greater than 470°F. The measured capacity reduction was 6 and 20% with hydronic inlet temperatures on the order of 450°F and 400°F respectively.
4. The prototype generator was fired using both simulated solar heat and the combustion of natural gas at the same time.

Conclusions:

1. The project team successfully designed, fabricated and tested two dual- fired (solar/gas) absorption chiller generators.
2. The dual-fired generator temperatures were 12% below the target 400°F when "fired" with 460°F hydronic fluid inlet temperature.
3. The breadboard absorption chiller with the dual-fired generator did not achieve full cooling capacity at Air-Conditioning and Refrigeration Institute (ARI) standard conditions.
4. Simultaneous dual-firing of the generator with both simulated solar and gas fuel was accomplished and data was collected. The recorded behavior of the cycle under these conditions provides information required to design the control system for future packaged prototypes.

Benefits to California:
The research project resulted in successful design, fabrication and testing of a solar-fired absorption chiller generator. Since the research and development are based on modifying a commercially available gas-fired 5-ton absorption chiller, the project would likely result in a commercial solar absorption air conditioning unit for large residential, multi-family, and small commercial customers. The estimated incremental production cost for modification of Cooltec's current absorption chiller is $150 to $225 per unit.

The electric energy savings are substantial, reducing space cooling electric load by as much as 75%. Since space cooling is a significant component of electric energy usage in California and as much as 30% of peak demand on a hot, sunny California afternoon, the impact of this system would be great.

Recommendations:
This project has resulted in proven feasibility of the technology. However, additional testing and refinement of the dual-fired generator design are necessary to improve its performance with the absorption cycle. Also a significant amount of development work is necessary for co-firing of the generator with solar and gas simultaneously, particularly with respect to generator burner controls and absorption cycle optimization.

Next step development work should focus on generator performance improvement and co-firing operation. Testing should continue on breadboard with simulated time varying (diurnal) solar energy delivered and cooling load cycling to fine tune absorption cycle and controls.
Following successful performance and co-firing operation, the system could then be field tested, in limited non-critical applications to capture real world performance.

Project Status:
- 100% Completed.
- Completed on Schedule.
- Completed within Budget.
- Final Report Completed.
- Feasibility Analysis Report Completed.

Simple and Reliable Active Power Filter for Energy Efficiency and Power Quality

EISG Grant Number: 00-27
PIER Area: Environmental Area
Principal Investigator: Keyue Smedley (949) 824-6710
Organization: University of California, Irvine
Grant Amount: $75,000
Status: Completed

Project Description:
The electric utility grid generates, transmits, and distributes power with sinusoidal voltage waveforms. When currents flowing in the grid are sinusoidal and in phase with the voltages, the system operates at the highest efficiencies and transmits maximum power. Unfortunately, most electronic loads draw non-sinusoidal currents that introduce harmonics and reactive current into the utility grid. As electronic applications in industry, commerce, agriculture, and residences have increased in recent years, harmonics in the utility grid have become a very serious power-quality issue. Harmonics deteriorate energy efficiency, reduce power transmission capability by 30% or more, cause harmful power disturbances to other appliances on the grid, and lead to potential blackouts. This project focused on the improvement of energy transmission efficiency and power quality via harmonic-current reduction.

The techniques for remedying harmonics can be classified into two groups, passive and active. The passive method involves harmonic trapping using inductors and capacitors. These devices are usually large in size and susceptible to resonance. The active method, known as active power filtering (APF), is based on power electronics and automatic control technology. The advantages of APF include: consistent performance against variable parameters (i.e. no tuning or aging error); the damping of potential resonance; compensating harmonic and reactive power separately or together; and the performance of complex frequency processing not provided by passive filters. When applied to a line with 30% total harmonic distortion, a successful APF will result in the recovery of power transmission capability.

The Principal Investigator proposed building a simple, reliable, and cost-effective APF based on one-cycle control (OCC). This method would eliminate the need of sensing three-phase load current, the nontrivial tasks of calculating harmonics and reactive current components, and the use of multipliers, as required by previous control methods. By applying one-cycle control and sensing the main-line current, this APF can realize unity power factor and low input current with a very simple circuit. The one-cycle control method also has the advantages of operating in constant frequency for reduced magnetic losses and of using space-vector mode for lowering switching losses.

Proposed Outcomes:
The goal of this project was to determine the feasibility of a one-cycle-control, active-power filter to reduce transmission energy loss by 30% and to improve quality by achieving total harmonic distortion (THD)<5% in power lines. The researcher established the following project objectives:

1. Fabricate and test a prototype one-cycle-control, active-power filter capable of 5 kilovolt-amperes (kVA).
2. Demonstrate capability to correct up to 30% THD and to maintain THD <5%.
3. Target manufacturing costs of less than $200/KVA.

Actual Outcomes:

1. The Principal Investigator performed both dynamic analysis and steady-state analysis and design to achieve stable operation. Then he built, debugged, and optimized a prototype OCC-APF circuit featuring one-cycle control with a power capacity of 5 kVA. Dynamic experiments have shown excellent stability.
2. Steady-state tests have demonstrated that the OCC-APF can reduce the THD in the power line from 30% to less than 5% and to maintain it for a wide range of operation at an efficiency of 96%.
3. Cost analysis reflects parts count and 10,000-unit production.

Conclusions:

1. This project designed and built an OCC-APF circuit that is capable of eliminating the harmonics in power-line currents. Its feasibility has been verified by the demonstrated stability and performance. The reliability, maintainability, and cost of the OCC-APF are superior to other proposed APF because of the significantly reduced part count.
2. With a demonstrated ability to correct line-current THD of 30% and maintain a low THD of less than 5%, the proposed OCC-APF provides an excellent solution to the problem of harmonic distortion in California and the US.
3. The Principal Investigator is confident that the target cost of $200/kVA can be met, since the circuit is very simple.

This project demonstrated the feasibility of a one-cycle-control, active-power filter to reduce transmission energy loss by 30% and to improve power quality by achieving total harmonic distortion (THD)<5% in power lines. Preliminary cost estimates indicate that this device is economically feasible.

Benefits to California:

The primary benefit to the ratepayer from this research is reduced environmental impacts of the California electricity supply, transmission, or distribution system. Assuming installation of the proposed devices in 50% of the users, the Principal Investigator reports a total saving of 4.0×10^{15} British thermal units (Btu). The potential environmental benefit is derived by reducing the air-borne emissions from the electric power industry in the United States (according to the statistics of 1999):

- Sulfur dioxide (SO_2): 0.65 million tons.
- Nitrogen oxides (NO_X): 0.4 million tons.
- Carbon dioxide (CO_2): 125 million tons.

According to reports from Electrical Power Research Institute (EPRI), Automated Research Corporation (ARC), Energy Information Administration (EIA) of the Department of Energy (DOE), and Manufacturing Energy Consumption Survey (MECS) at least 10% of the total rated capacity of every electrical substation cannot be used due to reactive and harmonic current flow. The OCC-APF provides a solution by canceling the harmonics and reactive components in the line. At this time there are no devices installed comparable to OCC-APF, since previously proposed systems are too complicated to be reliable and cost effective.

The California Energy Commission reported in a recent study of California industries that the single most potent cause of end-user power-quality problems is voltage sags or swells; the second is harmonics; the third is grounding or wiring issues. Together these three problems account for more than 85% of the power-quality investigations conducted. The study also showed that California has the highest costs in the nation for both outages and power-quality phenomena, between $13.2 billion and $20.4 billion. While this study does not directly address the cost of harmonics (harmonic distortion), it does indicate that the OCC-APF can eliminate a major contributor to a very large and expensive power problem.

Recommendations:

Based on the success of this research and development, the Program Administrator recommends:

1. Identification of a commercialization partner.
2. Development of a series of full-scale, pre-production, industrial OCC-APFs (10kW~1MW).
3. Field test of the full-scale industrial models.

After taking into consideration: (a) research findings in the grant project, (b) overall development status, and (c) relevance of the technology to California and the PIER program, the Program Administrator has determined that the proposed technology should be considered for follow-on funding within the PIER program. Receiving follow-on funding ultimately depends upon: (a) availability of funds, (b) submission of a proposal in response to an invitation or solicitation, and (c) successful evaluation of the proposal.

Project Status:

- 100% Completed.
- Completed on Schedule.
- Completed within Budget.
- Final Report Completed.
- Feasibility Analysis Report Completed.

SunGuard Roofing Tile for Natural Cooling

EISG Grant Number: 99-07
PIER Area: Buildings End-Use Energy Efficiency
Principal Investigator: Thomas Dinwoodie (510) 540-0550
Organization: Powerlight Corporation
Grant Amount: $74,885
Status: Completed

Project Description:
In hot climates where residential energy use is dominated by cooling needs, a cool roof can significantly reduce air conditioning costs. Most residential roofing systems have highly absorptive surfaces that conduct large amounts of heat into the attic space. Light colored roofing material has a positive effect on roof and attic temperatures. However there is no product on the market that offers both cool-roof benefits and photovoltaic (PV) electricity generation. Further, most PV systems are not aesthetically attractive when installed on sloped residential roofs. A need exists for an aesthetically pleasing, cool roofing product that supports PV integration.

In 1997, approximately 47% of all residences in the western United States had some form of air conditioning installed. Most new residences built in the hot interior valleys of California are equipped with central air conditioning. According to the California Energy Commission, air conditioning consumed ~8% of all residential electricity in1996. As more people move to hot inland areas the electricity used for residential cooling is increasing. Reducing the roof and attic temperatures can have a major effect of the amount of thermal energy that must be removed by the air conditioning system. Residential air conditioners often add to the peak demand in late afternoon when commercial and industrial demand also peaks. Reducing the roof and attic temperatures of residences in hot climates could lead to significant reductions in the electricity demand at peak hours.

The researcher in this project attempted to prove the feasibility of a new roofing material design that incorporates natural roof cooling, PV integration and aesthetic appeal. Natural cooling was achieved by providing two separate roof layers separated by an air layer. Proprietary supports maintained the separation. The researcher investigated materials for the top and bottom layer of the cooling channel as well as the use of a radiant barrier. Upon selection of the materials the researcher proposed building and testing prototype roofing material to demonstrate the cooling capabilities of the design. For building-integrated (new construction) applications, the researcher proposed a PV- and non-PV roofing tile to cover the entire roof. Non-PV roofing tiles were proposed to fill in areas where PV tiles would provide little electricity. Enhanced thermal benefits would be obtained over the entire roof area. The researcher intended to give the PV array an appearance of being integrated into the roof. The researcher anticipated that a similar design could be used in retrofit applications on existing buildings. This project included laboratory evaluation and field-testing of the building integrated product.

Proposed Outcomes:
The goal of this project was to prove the feasibility of a novel ventilated roofing tile incorporating a radiant barrier and proprietary supports that could be used with or without PV modules on residential roofs. The following project objectives were established:

1. Optimize the ventilated roofing tile geometry and materials to achieve a cost target of $2.50 per square foot (sf).
2. Determine life of ventilated roof material through accelerated life testing. Material should demonstrate the potential for 20-year life.
3. Reduce heat flow through the roofing material by 90%.

Actual Outcomes:

1. The researcher determined tile geometry through laboratory and field tests. The researcher selected materials for that prototype design. While tests indicated that most performance goals were met, the researcher did not meet cost targets. The researcher was not able to incorporate fully fire resistance materials within the price target.
2. The researcher installed a prototype 288 watt PV integrated module on an outdoor test roof at an independent laboratory. Thermal and electrical performance data were collected. The array consisted of 34 tiles, some with PV modules and some without. The researcher did not note any durability issues during the outside test period. Because the materials selected for the test articles would not be used in production, the researcher did not conduct accelerated life testing.
3. The researcher determined that heat flow through the ventilated roofing tile was reduced by 90% over the control material.

Conclusions:

1. Materials selected for initial prototypes will not meet cost goals. Further research is needed to identify materials that will meet all performance criteria including fire resistance within the cost target of $2.50/sf.
2. The Program Administrator recommends accelerated testing of ventilated roofing tiles once the researcher selects materials that meet the cost target.
3. The researcher successfully reduced heat transfer through the roofing material to the attic space. When PV modules are added to the ventilated roof tiles, total energy savings of 28%-35% could be achieved for typical residences in target markets. Target markets are new construction and retrofit (re-roofing) applications over existing asphalt shingle roofs, on buildings in hot, cooling-dominated climates. These climates include most hot, inland valleys of California. The building-integrated design should be designed and built as modular components to reduce installation costs. Significant engineering work remains to develop this product configuration.

The project final report was submitted with an extensive proprietary appendix. The published final report (Appendix A) does not include the information necessary to support the conclusions drawn. The reader is referred to the project researcher for access to any proprietary data.

Benefits to California:

While it is not ready for the market at this time, when it is fully developed and if project objectives are met, residential energy consumers will benefit from this product through lower energy bills and protection from system outages because of reduced peak loads. Small commercial and industrial buildings may be able to take advantage of this product depending on the architecture of the buildings. The electrical grid will be less congested and thus more stable. Additional environmental benefits derive from the renewable (PV) electricity that is generated in the State. This additional electricity offsets electricity produced by conventional combustion electrical generators.

Recommendations:

The Program Administrator recommends continuing the product development once the researcher has developed possible schemes to meet product cost and performance goals. Suggested research steps include:

- Conduct further materials and tile geometry research to meet cost and performance goals.
- Perform accelerated life tests (mechanical, water resistance, fire and UV resistance).
- Determine potential energy savings when applied to houses in specific climate zones.
- Obtain commercially critical certifications (e.g. UL, ICBO).
- Develop distribution channels and partnerships with developers and roofing contractors.

Project Status:

- 100% Completed.
- Completed on Schedule.
- Completed within Budget.
- Final Report Completed.
- Feasibility Analysis Report Completed.

Two-Phase Flow Turbine for Co-generation

EISG Grant Number: 99-33
PIER Area: Renewables
Principal Investigator: Gracio Fabris (818) 952-0217
Organization: FAS Engineering, Inc.
Grant Amount: $75,000
Status: Completed

Project Description:
There are many sources of boiling hot water currently not fully utilized for electricity production. These sources include geothermal, solar thermal, and bottoming cycles of large steam power plants. The energy in the heated water can be transferred to a thermodynamic working fluid to generate electrical power. Because the water is only under moderately high temperature and pressure, the working fluids often operate in the two-phase region (water and steam together, for example). Energy conversion devices that work in the two-phase region are typically low in efficiency and often suffer from poor durability. A possibility exists to greatly improve the overall cycle thermal efficiency. Impulse type two-phase turbines have moderate turbine efficiencies but a very high turbine blade erosion rate due to impingement by high velocity intermittent individual liquid droplets. While reaction turbines are more reliable than impulse turbines, the efficiencies of existing two-phase reaction turbines are poor. If the efficiency of two-phase reaction turbines can be increased to reasonable levels, then most of the advantages of two-phase cycles could be realized practically in many low energy conversion cycles.

The researcher's goal in this project was to show that a newly designed and patented turbine could operate at a turbine efficiency of at least 50%. For clarity, understand that because the best existing two-phase reaction turbine operates at 33%, the new turbine's efficiency will be a 50% relative improvement as well as an absolute efficiency of 50%. The researcher designed and tested improvements to the expansion nozzle of a two-phase turbine. To improve the turbine efficiency, the researcher proposed a proprietary nozzle design with a long spiral flow-path.
The researcher analyzed the prior-art of two-phase reaction turbines and identified two major efficiency loss mechanisms. The first mechanism is the slip-loss induced by very large lateral separation forces. These very large forces separate liquid to one side of the nozzles and vapor to the other side. The force acting on the vapor and liquid at a given operating condition within the reaction turbine is constant. However, the mass of liquid per volume unit exceeds the mass of vapor. Therefore the accelerations of the liquid and the vapor are different and separation occurs. The second loss mechanism is the abruptness in flashing of liquid to vapor. In two-phase reaction turbines this effect is due to high over-pressurization (at pressures about 10 times higher than saturation pressure) and very short, inefficient nozzles. If these mechanisms could be eliminated, turbine efficiency would improve greatly.

Proposed Outcomes:
The goal of this project was to determine the feasibility of a two-phase flow turbine incorporating a curved reaction nozzle to provide at least 50% conversion efficiency.
The researcher established the following project objectives:

1. Build a 25 kilowatt (kW) prototype two-phase reaction turbine that operates at 20,000 rotations-per-minute (RPM).
2. Build a turbine test facility capable of heating water to 435°F and 350 pounds per square inch gauge (psig), representative of the target applications, and configured for testing the two-phase turbine.
3. Test the prototype two-phase turbine, demonstrating efficiency of at least 50%.

Actual Outcomes:

1. The researcher completed design drawings and fabricated a 17-inch diameter turbine. The material yield stress point allowed operation up to approximately 50,000 RPM. The prototype turbine was operated several times at rotational speeds of 20,000 RPM, about 2.6 times higher RPM than prior two-phase reaction turbines.

2. The researcher constructed and instrumented a blow-down style test facility. This facility heated and stored 200 gallons of water at the required temperature and pressure (435°F and 350 PSIG). Pressure, temperature, and flow meters were installed on the two-inch blow-down pipe feeding the turbine. Flow was controlled by a two-inch ball valve. Additional equipment included a three-phase generator chain driven by the turbine and coupled to three balanced and cooled load resistors. Typical laboratory instrumentation was installed.
3. The researcher conducted multiple test runs of the two-phase turbine. The results for eight runs indicate turbine efficiencies of 50.1% at turbine design speed.
4. An unexpected result was the challenge of maintaining the ball bearings in the turbine. The inner bearing race was mated to the hot input shaft while the outer race was attached to a much cooler structure. During the test runs the inner race heated and expanded, using up the tolerance of the stainless steel ball bearing. To avoid bearing seizure during test runs, the researcher used chromium steel bearings with wider tolerances. Some of the bearings still seized and the others rusted quickly, but satisfactory test runs were accomplished in the time available.

Conclusions:

1. The two-phase reaction turbine was successfully built to design. The complex curved flow path for the two-phase fluid required a numerical controlled machine tool driven by the design computer code to accurately implement the design. This is not a problem in a modern machine shop.
2. The blow-down test facility built as part of this project was adequate to obtain early development phase results. That facility allowed the researcher to obtain data sets for operational intervals of minutes. However, electric generator products are expected to run and generate power for intervals of 20,000 to 30,000 hours between overhauls. Long-term considerations, such as erosion of the turbine nozzle, were not addressed in this project.
3. The researcher reported (Appendix A) the prior art in reaction turbines was generated at Lawrence Livermore National Laboratory (LLNL). LLNL tested a reaction turbine that demonstrated efficiency of only 33%. The two-phase turbine tested in this project demonstrates higher efficiency than the LLNL turbine in almost all test cases. The approximately 50% turbine efficiency demonstrated in this project is a major improvement over the 33% efficiency of the prior art (See conclusion in #5 below). Larger reaction turbines may exhibit increased efficiency due to scale effects.
4. Bearing failure plagued this project. For future test rigs the researcher should retain a bearing expert with experience in high-speed turbo-machinery. Such an expert might recommend other bearing designs that do not rely on rolling elements.
5. The Program Administrator suggests caution in accepting the reported turbine efficiency. The approach used to measure the power generated and hence the efficiency of the two-phase reaction turbine under test may have yielded overly optimistic results. The turbine drove an electric generator and the electrical power was measured. The generator was chain driven. A transfer efficiency coefficient of 0.85 was assumed for the chain transfer, and a generator efficiency coefficient of 0.85 was assumed. While these may be reasonable engineering approximations, it is unfortunate the researcher did not measure these coefficients. To understand the critical nature of these assumptions, consider the limiting case of perfect power transfer and generation. If the efficiency coefficients were both 1.0, the 50% efficiency reported would reduce to only 36%. That is still a 10% improvement over prior art. In fact, actual transfer efficiencies and generator efficiency are less than 1.0 resulting in a turbine efficiency of over 36%. Nonetheless, any potential industrial partner would want to have greater knowledge of the expected turbine efficiency and how it was measured.

Benefits to California:

Many sources of boiling hot thermal energy are available in California. These include geothermal, solar thermal facilities, and bottoming cycles of large power plants. Current recovery of these vast resources is hindered by lack of energy conversion devices that can operate efficiently while enduring the mechanical stresses of two-phase flow. If the turbine demonstrated in this project proves to be commercially viable, numerous new sources of energy could become available to produce electricity for California ratepayers.

This project did not perform a life cycle cost analysis. Thus it is not possible to determine the financial impact of this development to ratepayers.

Recommendations:
The results of this project support the feasibility statement for this project. A turbine efficiency of approximately 50% has been reported. The Program Administrator recommends calibrations of the researcher's test apparatus to more accurately determine this efficiency. Even in the range of 40 to 50% efficiency, this turbine is a major improvement over prior art. Rather than continue to develop improved turbine designs that operate at higher speeds, temperatures and pressures, the Program Administrator recommends the researcher reduce the design with proven feasibility to commercial practice. The Program Administrator recommends the researcher find a commercialization partner. With that partner the researcher should develop designs that have high reliability, durability, maintainability, and safety. In addition the researcher should perform a life cycle cost analysis to ascertain profitability of an energy cycle that includes the 50% efficient two-phase turbine.

Project Status:
- 100% Completed.
- Completed on Schedule.
- Completed within Budget.
- Final Report Completed.
- Feasibility Analysis Report Completed.

EISG Projects Completed in 2004

An Integrated Anti-Fouling Technology for Energy Efficient Chillers

EISG Grant Number: 00-23
PIER Area: Buildings End-Use Energy Efficiency
Principal Investigator: Young Cho (856) 424-8118
Organization: J&D Thermo-Fluid Technology, Inc.
Grant Amount: $74,953
Status: Completed

Project Description:
Chillers are major energy-consuming devices in large commercial and institutional buildings in California. They provide chilled water in central-air-conditioning systems in schools, hospitals, public and commercial buildings, and in industrial process equipment. The electricity consumed by medium-to-large chillers (200–2,000 tons) ranges from 0.25 kilowatt (kW)/ton to 0.57 kW/ton, at 40% and full load respectively. A 2,000-ton system, operating at full load on a hot afternoon, will consume over one megawatt-hour per hour. Fouling of condenser tubes decreases chiller efficiency dramatically. To limit fouling, water in the cooling tower is drained to carry away the concentrated mineral salts, and fresh water is introduced. Fouling still occurs and results in increased electricity consumption. This is particularly serious on hot afternoons in California, when air conditioning consumes 30% of all electricity.

If the method studied in this project can alleviate the problem of fouling of the condenser tubes, chillers will run more efficiently during the entire cooling season, resulting in substantial and continuous savings in electricity. Increasing the efficiency of cooling systems will reduce the peak demand for electricity during the hottest days of the year and save a substantial volume of water.

This project studied a unique, electromagnetic precipitation and filtration method to prevent or mitigate fouling in chiller condenser tubes. It is based on two technologies: solenoid-induced precipitation and side-stream filtration. Solenoid-induced precipitation utilizes a square-wave pulsating current to create time-varying magnetic fields. The magnetic fields then produce an induced, pulsating electric field in the circulating water. The electric field causes excess mineral ions such as calcium and magnesium in cooling-tower water to precipitate as mineral salts. These salts provide nucleation sites for other dissolved mineral ions. As the cooling-tower water continuously circulates, the precipitated seed crystals grow into larger particles that are removed by side-stream filtration. Removal of scale-causing mineral ions from cooling-tower water prevents or significantly mitigates fouling at the condenser tubes, resulting in direct electricity savings. The removal of mineral ions by the side-stream filtration system also permits an increase in the concentration cycle of the cooling water (the time period between replacements of the cooling water) resulting in substantial water savings.

Proposed Outcomes:
The goal of this project was to determine the feasibility of using solenoid-induced precipitation and side-stream filtration to maintain 90% heat-transfer efficiency of chiller condensers by limiting scale deposits on the condensers. The researchers established the following project objectives:

1. Fabricate a prototype system using both solenoid-induced precipitation and side-stream filtration for medium-to-large chiller applications, (greater than 200 tons).
2. Demonstrate that this technology can limit scale deposits to maintain 90% heat-transfer efficiency using a concentration cycle of five.
3. Demonstrate that this technology can limit scale deposits to maintain 90% heat-transfer efficiency using a concentration cycle of eight.

Actual Outcomes:

1. The researcher constructed a test-flow loop that consisted of a laboratory cooling tower, heat-transfer test section, an automatic blow-down system, a flow meter, solenoid-induced precipitation, and side-stream filtration.
2. The researcher conducted fouling tests using a high heat flux of 90-100 kilowatt/square meters (m^2) in order to accelerate the fouling process, a practice common among fouling researchers. Controls limited variation of the electric conductivity of circulating water in the simulated cooling tower to within 5% of the set conductivity value. A solenoid valve controlled the blow-down using input from the electric conductivity meter. This test ran for five cycles of concentration. The heat transfer coefficient remained above 90% for 150 hours with no detectable trend to lower values.
3. The test procedure used for eight cycles of concentration was similar to the above. In this test the heat-transfer coefficient remained above 90% for 150 hours, with no detectable trend to lower values. In a control test, the heat-transfer coefficient dropped below 90% after about 50 hours and displayed a marked downward linear trend thereafter.

Conclusions:

1. This project successfully constructed an experimental apparatus to test the feasibility of the method.
2. The heat-transfer coefficient remained above 90% for 150 hours and five cycles of concentration.
3. The heat-transfer coefficient remained above 90% for 150 hours and eight cycles of concentration.
4. Particulate matter captured in the side-stream filter caked into a hard substance during the test. Continued operation would result in an inoperable filter. Some back-washable filters are designed specifically to reduce the accumulation of calcium carbonate scale crystals so that the scaling is minimized and does not become a problem. It is recommended that tests be done to verify the benefit of these filters when operating specifically in the conditions created by the use of this method.

Based on findings in this project, chiller condensers equipped with a device incorporating this method could be operated within 10% of maximum peak performance. This could result in significant energy savings for operators of medium-to-large chillers. The present project demonstrated the feasibility of integrated anti-fouling technology.

Benefits to California:

The heat-transfer performance of a water-cooled chiller degrades as the condenser tubes become fouled. As the fouling decreases the efficiency of the chiller, energy consumption increases. Typically, a large chiller consumes 0.6 kW/ton when its condenser tubes are clean free of and scale. When the condenser tubes become fouled, the chiller runs at a level substantially greater than 0.8 kW/ton. The cost of correcting this problem is relatively small compared to increased energy costs due to fouling in the condenser tubes. If the results from the project are widely used in California, water-cooled chillers can be operated near initial peak efficiency. Ratepayers who operate large chillers will be the primary beneficiaries. Other ratepayers will benefit from the decreased load on the grid during peak summer hours, when air conditioners are widely used.

Recommendations:
The manner in which particulates are filtered from water remains a technical challenge for this project that must be solved prior to commercialization. Calcium carbonate and other crystals accumulated at the top of the filter medium, caking into a hard substance over time. The researcher must redesign the filter to avoid caking of calcium carbonate scale crystals. Some filters are designed to be back-washed to reduce the accumulation of materials. Other solutions should also be investigated. Once that problem has been overcome, the researcher should work directly with a commercial chiller manufacturer. That work should entail integration into standard commercial products and a field test of prototype units.

Project Status:
- 100% Completed.
- Completed on Schedule.
- Completed within Budget.
- Final Report Completed.
- Feasibility Analysis Report Completed.

Cost Effective Lost Distortion Adjustable Speed Drive

EISG Grant Number: 99-34
PIER Area: Industrial/ Ag/ Water
Principal Investigator: Arthur Iverson (408) 354-7972
Organization: Spinel LLC
Grant Amount: $75,000
Status: Cancelled

Project Description:
The purpose of this project is to research the feasibility of a new low-cost pulse width modulated (PWM) inverter design capable of producing pure waveforms for controlling adjustable speed drive (ASD) motors. The focus of the project is to establish the feasibility of building ASDs that do not produce the distorted waveforms that cause premature motor failures such as those generated by the ASDs now in use. Electric motors are designed to run on sinusoidal utility power (60 Hz). An advanced ASD, employing high frequency switching >60kHz, allows the synthesis of essentially pure sine waves that are cleaner than those received from the Utility and provides normal motor life. Agricultural uses of ASD motors include programmed pump irrigation, and uses in produce conveyers and processing systems. ASD pumps are also used to control water flow in water transport and sewage treatment plants.

Proposed Outcomes:
- Fabricate and test a prototype motor controller on a three-phase 5 HP motor.
- Develop a prototype three-phase inverter capable of producing pure variable frequency sine waves with current harmonics less than 5% and efficiency greater than 92% regardless of cable length.
- Produce a feasibility assessment based on prototype performance testing.

Anticipated Benefits:
- Low cost solution to eliminating premature ASD motor failures due to leading edge PWM pulse spikes that cause premature insulation failure.
- Eliminate or minimize costly harmonic filters and associated engineering analysis that is currently required for harmonic sensitive ASD installations.
- Significantly increase ASD market penetration which is currently only 9% due to lack of confidence in the technology.

Project Status:
The project was cancelled due to failure on the part of the contractor to show evidence of reasonable progress during the term of the grant agreement.

Flat-Plate Micro-Dish Photovoltaic Concentrator Module

EISG Grant Number: 03-18
PIER Area: Renewable Energy Technologies
Principal Investigator: Akira Terao (408) 991-0915
Organization: SunPower Corporation
Grant Amount: $74,985
Status: Cancelled

Project Description:
The purpose of this project is to determine the feasibility of using an array of low-profile small-size dish reflectors to concentrate sunlight onto photovoltaic cells.

Proposed Outcome:

- A concentrator prototype will be fabricated and tested.

Anticipated Benefit:

- The proposed technology could produce a low-profile concentrator system for under $2/watt that could be used in the same tracking systems used for flat-plate tracking systems.

Project Status:
The award was declined so the project was cancelled.

Solar Fired, Compressor Assisted Absorption Chiller

EISG Grant Number: 99-15
PIER Area: Buildings End-Use Energy Efficiency
Principal Investigator: Jim Bergquam (916) 383-9425
Organization: Bergquam Energy Systems
Grant Amount: $75,000
Status: Completed

Project Description:
This project researched the feasibility of adding small vapor compressors to solar-fired absorption chillers to lower the operating temperature of the primary generator, simplify the maintenance, and reduce the cost of solar-powered absorption heating, ventilation and air conditioning (HVAC) systems.

The nominal generator temperature in a single-effect absorption chiller is 190°F, and the coefficient of performance (COP) is between 0.7 and 0.8. Standard double-effect absorption chillers require the high temperature 1st stage generator to operate above 300°F. The nominal double-effect cycle COP is 1.2. Various modifications have been proposed to lower the generator temperature in absorption chillers. Any modifications must reduce the operating temperatures of the generators while maintaining the COP of the units. One proposal is to add a small vapor compressor to the basic cycle.

This project involved both the bench testing of an automotive turbocharger and the computer modeling of single effect (1E) and double effect (2E) compressor-assisted absorption chillers. The bench testing showed a turbocharger driven by steam at 240-250°F was able to provide the volumetric flow rate required by a compressor-assisted chiller. Additional work needs to be completed to develop mechanical compressors and/or thermocompressors that are optimized for this application.

The researcher developed computer models to simulate the effect of vapor compressors at selected locations in single and double effect lithium-bromide/water (LiBr/H2O) absorption chillers. Two locations for single-effect chillers and three locations for double-effect chillers were modeled. The best results were obtained for a double-effect chiller with the compressor located between the high temperature and the low temperature generators.

Proposed Outcomes:
The goal of this project was to determine the feasibility of using small vapor compressors to reduce the cost, improve the performance, and simplify the maintenance of solar-powered absorption HVAC systems. The researchers established the following project objectives:

1. Develop computer models to simulate the operation and calculate the performance of solar-fired compressor assisted (SFCA) single-effect and double-effect absorption chillers with a LiBr/H_2O solution as the working fluid.
2. Determine the location of the compressors that will provide the greatest increase in the temperature of the refrigerant in the cycle and thereby lower the required operating temperature of the generator.
3. Bench test a small compressor of the type that could be used in this application.

Actual Outcomes:

1. The researcher developed computer models to simulate the operation and calculate the performance of SFCA absorption chillers. The computer models determine all of the state points of the LiBr/H_2O solution in the cycle. The specified parameters are the temperatures of the chilled water and the cooling tower, the cooling capacity of the chiller, the concentration of the strong solution, and the compression ratio and compressor efficiency. The models calculate the properties at all of the state points
   and the coefficient of performance of the chillers and the flow requirements of the vapor compressors.

2. The project calculated results for two compressor locations for a single-effect chiller and three compressor locations for a double-effect chiller. For each compressor location results from the computer models show:
   a. The compression ratio and inlet volumetric flow rate.
   b. The outlet temperature and power requirement of the compressor.
   c. The operating temperature of and the heat input to the generator.
   d. The chiller COP.
3. The researcher bench tested a turbocharger from a 1990 Mazda 626, 2.2 liter engine. From those tests the researcher determined compression ratio, volumetric flow rate, power input, and isentropic efficiency of the compressor.

Conclusions:

1. The model performed adequately, although some cases of instability arose, particularly in "Task 7, Evaluation of the 2E Chiller" with the compressor located between the evaporator and the absorber. While the failure had little effect on this study, it creates doubts concerning the value of the model.
2. The calculations indicated the best location for a compressor in a 1E absorption chiller was between the generator and the condenser, though there was concern about the high volume flow requirements. The indicated best location of the compressor in a 2E absorption chiller was between the high temperature generator and the low temperature generator. In this case the high temperature generator can operate at less than 250°F, with pressure just below one atmosphere. The compressor outlet temperature and volume flow rate are reasonable for a small compressor, and the overall COP is good. Any future work should focus on this case.
3. The bench tests of a small compressor emphasize the need for a systems engineering approach to the design of a compressor-assisted chiller. For example, the turbocharger was not the right device to use for this purpose. The researcher made no effort to address issues such as air leakage passed the turbine shaft. Rather, the bench testing simply recreated performance data known to the turbocharger manufacturer. A more useful result may have been obtained if the computer model had incorporated a parameterized model of the compressor. Then the researcher could have obtained ideal compressor parameters, allowing him to purchase a compressor built to those specifications.

Benefits to California:

Solar-absorption air conditioning is a renewable, non-polluting, environmentally friendly technology. It has the potential to displace conventional, electrically driven compression air conditioners, which is a major consumer of electricity statewide. The implementation of this technology has the potential to significantly reduce both the consumption of and the peak demand for electrical power. This will benefit all the residents of California.

Recommendations:

This project investigated the potential of using small vapor compressors in absorption chillers. The researcher identified the operating conditions of the Mazda turbocharger as similar to those useable in absorption chiller systems.

Additional research is necessary to optimize the design of mechanical compressors for solar cooling technology. Another approach is the use of thermocompressors to perform the required compression process. An R&D partner or a commercializing partner should be committed to this project before further public funds are committed.

The next steps are:

1. Identify and acquire a specific absorption chiller in which to incorporate a vapor compressor.
2. Perform a detailed specification of a vapor compressor that has the exact specifications required in this application using a trusted computer model.
3. Purchase a compressor optimized for absorption chillers that satisfies the specifications for performance.

4. Assemble and bench test the compressor-assisted absorption chiller.

Project Status:

- 100% Completed.
- Completed on Schedule.
- Completed within Budget.
- Final Report Completed.
- Feasibility Analysis Report Completed.

Spectrally Enhanced Incandescent Ceramic Incandescent Emitter

EISG Grant Number: 01-17
PIER Area: Buildings End-Use Energy Efficiency
Principal Investigator: Devon R. McIntosh (301) 283-6250
Organization: Sonsight Inc.
Grant Amount: $75,000
Status: Completed

Project Description:
Conventional tungsten-filament electric light bulbs are inefficient light sources. They radiate much more power in the infrared part of the spectrum than in the visible. While fluorescent lights are significantly more efficient and longer lived than tungsten lights, their performance has not yet attracted most residential consumers. In addition, fluorescent lights contain significant quantities of mercury, an environmental pollutant. There are other alternative light sources available to the consumer, which are more efficient than tungsten, but they have higher initial costs, and consumers consider them to be a poor spectral match to the solar visible spectrum.

This project proposes a new type of spectrally selective electric light emitter. It is designed to produce more visible light and much less infrared than an equivalent tungsten bulb and without the use of mercury. It would be potentially three times as efficient as tungsten-filament bulbs and significantly longer lived. Lighting accounts for about 19 percent of all U.S. electricity consumption and 9.4% of residential electricity consumption. In 1993 the majority of light bulbs in residential households were incandescent. According to the RECS Survey, 453 million lights out of a total of 523 million used one or more hours per day were incandescent (87 percent). California consumers could reduce their electrical consumption proportionally by replacing existing tungsten incandescent bulbs with a more efficient incandescent light. In 1999 discarded fluorescent bulbs contained 17 tons of mercury, of which 71% was deposited in the nation's landfills. While there is no consensus on the importance of mercury in landfills, its increasing concentration in the oceans and commercial fisheries is thought to endanger people's health, particularly the health of pregnant women and their offspring. Thus, California's environment would improve if another, more benign source of light replaced fluorescent lights containing mercury.

The key to the new light bulb is the development of a ceramic, spectrally-selective incandescent emitter that emits strongly in the visible spectrum from its surface when heated. The researcher proposed a millimeter scale emitter. The tubular emitter is made of doped zirconia powder, which has the characteristic of being an insulator at low temperatures and a conductor at high temperatures. This project proposed a new method of heating the emitter. In this method the tube is heated externally up to its conduction temperature using a radiant source. Then a current is passed through the tube causing resistance heating, bringing it to a higher operating temperature. The emitter material suppresses infrared emission from its interior through its microstructure, which is designed to consist of small grains interspersed with small voids. For the light source to succeed, its microstructure must be stable against the usual high-temperature grain growth at its operating temperature of 2,650 Kelvin (K) over a lifetime of several thousands of hours.

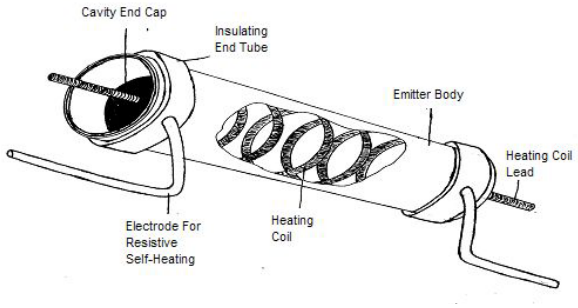

Proposed Outcomes:
The goal of this project was to determine the feasibility of using a new composite ceramic emitter design in incandescent bulbs to achieve a 300% increase in visible light per watt over standard incandescent bulbs. The researchers established the following project objectives:

1. Utilize a novel heating arrangement to attain a stable emitter temperature of 2,650 K.

2. Optically and physically structure the composite ceramic oxide emitter so that, when heated as designed, it emits three times more of its total radiated power within the visible spectrum than a standard 100 watt (W) incandescent bulb does.
3. Generate stability data supporting the long-term goal of achieving an emitter life of greater than 2,100 hours.
4. Obtain updated manufacturing estimates supporting a manufacturing cost goal of approximately $0.75 per bulb.

Actual Outcomes:
The research resulted in the following outcomes:

1. Utilize a novel heating arrangement to attain a stable emitter temperature of 2650 K.
   a. Radiant heating routinely achieved emitter turn-on.
   b. The thermally insulating emitter end tubes and molybdenum electrodes allowed emitter body temperatures of up to 2,653 K.
   c. The new electro-thermal stability model demonstrated that emitter (temperature) stability is insensitive to emitter dimensions and sensitive to incident radiation intensity.
   d. There is moderate quantitative agreement between the calculated and the measured minimum coil temperatures needed to prevent thermal runaway, but only qualitative agreement on the operating voltages.
2. Optically and physically structure the composite ceramic-oxide emitter so that, when heated as designed, it emits three times more of its total radiated power within the visible spectrum than a standard 100 W incandescent bulb does. Rapid grain growth in the first few minutes at high operating temperatures precluded measurement of spectral selectivity.
3. Generate stability data supporting the long-term goal of achieving an emitter life of greater than 2,100 hours. The researcher did not achieve this objective because rapid grain growth in the first few minutes of operation shortened emitter life. Therefore, no long-term testing was performed.
4. Obtain updated manufacturing estimates supporting a manufacturing cost goal of approximately $0.75 per bulb. The researcher did not meet this objective because of uncertainty about achieving adequate emitter life.

Conclusions:
The Program Administrator's conclusions from this project are:

1. Radiant heating can achieve emitter turn-on as a necessary step, though its outcome was not much in doubt, given the earlier experiments with heating by torch.
2. The molybdenum electrodes work as expected, a significant step since this new substance introduced a potential materials compatibility issue.
3. The new electro-thermal stability model validation does increase understanding of the method. However, the time spent on model development could possibly have been put to better use on more important unsolved issues of material stability.
4. The lack of quantitative agreement with the model is not a serious concern at this time.
5. Rapid grain growth at operating temperature is a serious concern.
6. Emitter lifetime of greater than 2,100 hours has not been demonstrated.
7. The manufacturing goal of $0.75 per bulb is uncertain at this time, due to the lack of a working design.

The goal of this project, to achieve a 300% increase in visible light per watt over standard incandescent bulbs through a new composite ceramic emitter design, remains unfulfilled. Although the project appears to have been well structured, in retrospect more emphasis could have been placed on issues of materials stability.

Benefits to California:
The primary benefit to the ratepayer from this research is a reduction in environmental impacts of the California electricity supply or transmission or distribution system. If this research were successful, it

would lead to an incandescent light bulb that is three times more efficient than standard tungsten bulbs. Since 87% of the total of 523 million light bulbs used nationally one or more hours per day in residential households are incandescent, replacing them with a design three times more efficient would produce large savings.

The annual, national, average residential electricity consumption for lighting in 1993 was 940 kilowatt hours (kWh) per household. In the Western census region, the average household consumed 856 kWh of electricity for lighting at a yearly cost of $76 per household (1993 dollars). While these data are older than desired, and there is significant variation in the per unit cost of electricity within the Western census region, it is clear that California consumers could reduce their electrical consumption and expenditures significantly by replacing existing tungsten bulbs with a more efficient incandescent bulb.

Recommendations:
The researcher should examine the materials question of grain growth and lay out a plan, based on one or more new experimental results, before additional funding is considered. The Program Administrator suggests a program stressing more microstructural analysis of heated specimens and spectral measurements of them at high temperatures. Additional model development seems to be of secondary importance at this stage.

The Program Administrator also recommends some analysis of phase diagrams of the constituent pseudo-binary, ternary, quaternary oxide systems and carbon. A specific question in particular is whether initial heating may possibly cause transient liquid phases. If so, that could greatly increase grain growth, since diffusion constants in liquids can be orders of magnitude faster than in solids. If the *final* equilibrated composition does not contain liquid, then *transient* liquid phases might be avoided by optimization of initial time-temperature heating protocols.

Finally, thoria is thought to inhibit grain growth in tungsten and might prove valuable here (with suitable precautions of course). Industry has used it for many years, and its weak radioactivity might not be an environmental impediment. If thoria adequately inhibits grain growth, that result would at least demonstrate the feasibility of the program.

Project Status:
- 100% Completed.
- Completed on Schedule.
- Completed within Budget.
- Final Report Completed.
- Feasibility Analysis Report Completed.

EISG Projects Completed in 2003

Biomass Boundary Layer Turbine Power System

EISG Grant Number: 00-06
PIER Area: Renewables
Principal Investigator: Darren Schmidt (701) 777-5120
Organization: EnergySchmidt
Grant Amount: $75,000
Status: Completed

Project Description:
This project explored the potential for cost effective electricity production from biomass in distributed generation applications. The focus was on the means of energy extraction from the high-energy flue gasses resulting from biomass combustion. Sufficiently energetic flue gasses from biomass combustion contain ash and other particulates that could hinder the operation of most high temperature machinery.

The researcher tested a turbine with a rotor that consists of many parallel disks. He measured its performance while firing biomass fuel. This turbine, called a "boundary layer turbine," relies on the friction of the gases passing through the rotor to impart motion to the shaft. The technology is well known for its resistance to erosion in viscous pumping applications.

The proposed turbine was not completed and made available in accordance with the project's schedule, however, a manufacturer, at no cost, supplied a low-efficiency turbine to the project. A used pressurized combustor was purchased and adapted to a pressurized combustion residence chamber. Over 40 hours of testing at various operating states was accomplished at very low research cost. At the conclusion of this test series, the researcher concluded that no significant barriers exist within the boundary layer turbine to hamper the use of biomass fuels.

Proposed Outcomes:
The goal of this project was to determine the feasibility of operating a boundary layer turbine on flue gasses of a biomass combustor. The following project objectives were established:

1. Demonstrate the performance of a boundary layer turbine operating on combustion flue gas.
2. Optimize turbine performance, achieve 21 % conversion efficiency.
3. Achieve low levels of deposition, corrosion, and erosion of the turbine.
4. Design the next generation boundary layer turbine.

Actual Outcomes:
Testing of a turbine proved that it did run on biomass fuel with the following performance.

1. Boundary layer turbine performance for five operational scenarios is tabulated here.

Case	Working fluid/fuel	Firing rate	Temper-ature	Pressure	RPM	Power	Isentropic efficiency
1	Compressed air	N/a	Unk	86 psig	8193	11.6 HP	Unk
2	Compressed air	N/a	69 ^{o}F	33 psig	1100	0.6 HP	16%
3	Natural gas flue gas	173,000 Btu/hr	832 ^{o}F	35 psig	6218	4.6 HP	12.25 %
4	Biomass flue gas	192,600 Btu/hr	737 ^{o}F	40 psig	6284	4.3 HP	11 %
5	Saturated Steam	Unk	N/a	100 psig	6500	12.4 HP	13.7 %

2. Conditions were varied to determine optimum turbine operating conditions. The highest efficiencies were obtained at the highest operating speeds. Under hot operating conditions (800°F) and less than 50 psig, efficiencies of 12% were obtained. The highest rotational speed under these conditions was 6500 rpm. The efficiency and horsepower curve are linear with speed, suggesting that higher efficiencies could be obtained. Increasing pressure increased power and efficiency. Increased temperatures had the same effect but to a lesser degree. The highest torques

(100 in- lbs) were obtained at the lowest rotational speeds. The turbine was equipped with two nozzles. Primarily only one nozzle was used during testing. Experiments with the second nozzle resulted in little improvement in power or efficiency.

3. Qualitative assessment of deposition, erosion, and corrosion are as follows. 150 lbs of biomass was fired in the turbine with an average ash content of 1%. The biomass consisted of wood-derived sawdust and oats, fired separately. Firing of 100% biomass was achieved. Post inspection of the turbine rotor provided no indication of ash deposits, plugging between disks, or excessive build up in the turbine housing.
4. Evaluation of power cycles was completed to arrive at a design for the next generation biomass boundary layer turbine. This preliminary design is specified in the form of a process flow diagram.

Conclusions:

1. This project proved that it is feasible to drive a boundary layer turbine with flue gasses from biomass combustion.
2. The efficiency obtained was not as high as projected in the proposal, but the turbine used was not the one planned in the proposal. This was because when the time came to use it, the proposed turbine was not ready. Documentation of more efficient boundary layer turbines is provided. The conclusion is that higher efficiencies might be obtained with proper design of the turbine and the matching combustor.
3. No indication of ash deposits, plugging between disks, or excessive build up in the turbine housing was observed on posttest teardown. This is positive indication that this simple turbine architecture is tolerant of particulate matter in the working fluid. It seems obvious that partially burned pieces of biomass must not be fed into the turbine, but tolerance of fly ash can be a very useful characteristic.
4. Engineering calculations indicate that the achievable system efficiency may be as high as 25% with a boundary layer turbine. This will require an isentropic efficiency of 60% for the turbine. While this efficiency is theoretically achievable, only 49% efficiency has been achieved/reported in practice.

Benefits to California:

The benefits to California from this technology are derived from the simplicity of the system, and its potential to be transported to the source of the biomass. The challenge with forest slash and other forest biomass is its location. Transportation of the fuel to the power generator makes the fuel very expensive due to transportation costs. By transporting the power generator to the forest, the biomass fuel can be used to generate electricity. Then the problem is to transport the electricity to the consumer by attaching the generator to the grid. The added cost of grid interconnection equipment was not estimated in this project but could be high relative to the cost of the turbine.

Recommendations:
This project was proposed and funded with a targeted 21% isentropic efficiency. The efficiency achieved was 11% to 13%. The turbine efficiency must be approximately 50% or better in order for this technology to compete with established systems.

Project Status:

- 100% Completed.
- Completed on Schedule.
- Completed within Budget.
- Final Report Completed.
- Feasibility Analysis Report Completed.

Catalytic Stabilizer for Industrial Gas Turbines

EISG Grant Number: 99-26
PIER Area: Environmentally Preferred Advanced Generation
Principal Investigator: Shah Etemad (203) 287-3700
Organization: Precision Combustion, Inc.
Grant Amount: $75,000
Status: Completed

Project Description:
Air emissions from combustion turbines used in mechanical and power generating applications are a major issue when seeking approval for installation. Oxides of nitrogen, NOX, are major constituents of those emissions. Gas turbine manufacturers have developed dry, low NOX (DLN) technology to reduce NOX emissions from over 200 parts per million to a range of 9 to 25 parts per million (ppm). These levels of emissions are achieved without the use of water or steam injection, or the use of selective catalytic reduction (SCR) devices in the exhaust. When SCR technology is combined with DLN technology the NOX emissions are reduced to the range of 2.5 to 5 ppm. This is the most common technology suite for large (>50MW) combustion turbines. Unfortunately SCR technology is very expensive making its use on the smaller combustion turbines uncommon. Smaller combustion turbines serve an important purpose in California's overall energy strategy when they are used in combined heat and power applications. In these installations over 70% of the energy of the fuel is put to productive use.

Researchers have determined the major reasons that DLN technology is limited to 9 ppm NOX. The primary reason is the use of a pilot burner to stabilize combustion over all operating conditions (i.e. startup, part load, full- load, and transients.) Without the pilot burner the engine could cease operation during various engine exercises. The pilot burner also reduces combustor "rumble", a vibration that can destroy an engine in a relatively short period of time. Although DLN pilots commonly burn only 2-5% of the fuel at full load, they are still the source of about 50% of the NOX emissions in a DLN burner. If the pilot burner emissions could be eliminated or reduced, a DLN burner could achieve NOX levels of less than 5 ppm.

This project tested the feasibility of using a catalytic stabilizer to replace the pilot burner in a regular DLN burner. The concept is to install the catalytic stabilizer in the fuel injectors (there may be 8 to 18 injectors in one DLN burner assembly). While catalytic combustion techniques have been under test for decades, those concepts replaced the entire DLN system with a catalytic system. The novelty of this concept is the use of catalytic technology only for the pilot burner, a small part of the overall combustion assembly. Full catalytic systems are large, often requiring extensive redesign of the engine casings. The catalytic stabilizer used in this project was built into an existing fuel injector without having to redesign major engine components. If this technology proves to be acceptable to the turbine manufacturers it could be readily retrofitted into combustion turbines already in the field. The use of the catalytic stabilizer could reduce DLN emissions to less than 5ppm NOX.

The catalytic reactor used in this study can begin and sustain operation at the relatively low outlet temperatures typical of today's combustion turbine compressors. That is the temperature of the air that after being compressed enters the combustion assembly. Operation of catalytic devices at such low temperatures (as low as 681°F) is unusual and a key feature that makes this concept work.

Proposed Outcomes:
The goal of this project was to determine the feasibility of building a catalytic stabilizer in place of the pilot burner in a standard engine fuel injector. The following project objectives were established:

1. Design the catalytic stabilizer to fit into an existing fuel injector for a Taurus 70 engine (Solar Turbines Inc.).
2. Determine if the catalytic stabilizer can begin and sustain fuel injector operations at the relatively low temperatures of the engine compressor outlet air.
3. Achieve NOX emissions of less than 5 ppm for the Taurus fuel injector with the catalytic stabilizer replacing the standard pilot burner.
4. Determine if the catalytic stabilizer will allow leaner operation of the fuel injector.
5. Evaluate the operation of the catalytic stabilizer at a number of standard engine operating conditions.

Actual Outcomes:

1. The catalytic stabilizer fits into the existing Taurus 70 engine without major modification to the injector.
2. No pre-burner is required for the operation of the catalytic stabilizer. The catalytic stabilizer lit off at temperature around 355°C (671°F) during high pressure testing of the catalytic stabilizer – which is lower than the 435°C combustor inlet temperature.
3. The integrated catalytic stabilizer and the Taurus 70-injector assembly delivered NOX and CO emissions below 5 ppm.
4. The catalytic stabilizer allowed leaner operation of the injector.
5. The catalytic stabilizer demonstrated variable-load operability. In addition, low emissions were obtained at both 100% and 50% load conditions.

Conclusions:
The catalytic stabilizer was built into two Taurus 70 production fuel injectors. The modified injectors were operated at both ambient conditions and simulated engine pressures. Data supported the key objectives of the program. The catalytic stabilizer could be designed to fit into the space envelope allowed by the Taurus 70 fuel injector. It did begin and sustain operation without the use of a pre-burner. And low emissions were achieved.

1. There are potential cost advantages to this technology since major modifications to the injector were not necessary.
2. The modified fuel injector could begin and sustain operation without a pre-burner. The tests showed that no pre-burner is required for the operation of the catalytic stabilizer from half load to base load conditions for the Taurus 70 fuel injector. It also operated free from auto-ignition and flashback over a wide range of stabilizer fuel-air ratios and airflows. Auto-ignition and flashback can be major operational problems with fuel injectors resulting in severe engine damage.
3. The project successfully demonstrated NOX and CO emissions of less than 5 ppm at Taurus 70 baseload (high pressure) conditions for a single injector.
4. The project demonstrated that leaner operation in the upstream end of the combustor can be achieved by the catalytic stabilizer. Additionally, the results show that the catalytic stabilized fuel injector can achieve low emissions at lower inlet temperatures than those required for a "conventional" catalytic combustor.

The project demonstrated that sufficient catalytic activity can be achieved by both baseload and half load conditions to achieve stable combustion.

After this project was completed the California Air Resources Board (CARB) lowered the limits on regulated emissions, including NOX. This project achieved the targets that were based on regulations existing at the time of the proposal, as well as satisfied the new regulations with the effective date of 2003. However, the PA is concerned that the approach of this project will not provide an adequate operational safety margin in the emissions levels to satisfy the newly imposed regulations with the effective date of 2007. While this approach may find a broad world market with huge reductions in emissions world wide, it does not appear to be applicable in California in its current configuration.

Benefits to California:
This project has contributed to the Public Interest Energy Research (PIER) program objectives for "Environmentally Preferred Advanced Generation" by advancing technology that will reduce emissions from combustion turbines typically deployed in mechanical and distributed power generation applications. Specific benefits are:

1. Improved air quality with cost savings. The catalytic stabilized fuel injector provides relatively low NOX levels at a low cost. Customers will ask the manufacturer of the gas turbine to guarantee air emissions. At this time the manufacturers have not indicated where they will guarantee an engine with catalytic stabilizers. If the guarantee level is below the level set by the California Air Resources Board for distributed generation, the catalytic stabilizer could be used throughout California to meet those regulations at reasonable costs.
2. Elimination of the use of ammonia to achieve low emissions. Ammonia is not used with the catalytic stabilizer. If gas turbine operators must install an SCR to meet low emission requirements, a measurable amount of ammonia would "slip" into the atmosphere.
3. Enhanced distributed generation. Californians will select gas turbine distributed generation more readily if the manufacturer can guarantee emission levels meeting the 2007 regulations. This will enhance the deployment of distributed generation and cogeneration within the state.
4. Improved air quality from retrofit. Manufacturers can apply the catalytic stabilizer technology to selected existing engines during an engine overhaul and upgrade without major modifications to the engine. These retrofits will further enhance the air quality of California.

Recommendations:
This grant proved the feasibility of replacing a pilot burner in a DLN combustor with a catalytic stabilizer. All tests were done with single injectors in test rigs. In subsequent research the development team should reconfigure the technology to satisfy the 2007 CARB emission regulations, install it into an actual engine and develop the control algorithms for engine operation. Engineers should measure emissions levels and compare them with the 2007 CARB regulations for distributed generation. Engineers should also determine reliability and lifetime of the catalytic stabilized device. The provider of the catalytic stabilized device and turbine manufacturer must determine the costs to manufacture and install these devices and compare those costs to the costs of competing technologies.
The PA determined that the data generated during the initial grant was sufficiently complete and successful to recommend taking this technology to the next step of development. To meet the 2007 CARB regulations the catalytic stabilizer would have to be reconfigured. Though significant, reconfiguration should not be a show stopper. Continued cooperation with a major gas turbine manufacturer will accelerate the transfer of the technology into the marketplace. This technology will be of the greatest benefit to engines of less than 50 MW.

Project Status:

- 100% Completed.
- Completed on Schedule.
- Completed within Budget.
- Final Report Completed.
- Feasibility Analysis Report Completed.

Counter Rotating Wind Turbine System

EISG Grant Number: 00-09
PIER Area: Renewables
Principal Investigator: Kari Appa (949) 458-7314
Organization: Appa Technology Initiatives
Grant Amount: $74,915
Status: Completed

Project Description:
Most wind turbines in the world are single rotor systems, which provide simplicity, reliability and durability. Over the years, improvements have enhanced energy conversion efficiency of these single rotor systems. For example, blades have better aerodynamic characteristics, gears with reduced noise have better torque transmission efficiency, and alternators have better electrical efficiency. However, despite these improvements, single rotor systems are able to convert only a small fraction of the total wind stream energy into electrical energy.

Albert Betz predicted the maximum energy conversion efficiency of 59% when the axial wind speed is reduced by 2/3rd across a single rotor disc. However, practical wind turbines convert less than 40% of the wind energy into electrical energy. Hence, nearly 60% of the potential wind energy escapes without being harnessed. According to C. G. Curtis, the primary reason may be that a single rotor cannot be designed to achieve large changes in velocity or enthalpy. He therefore introduced the concept of velocity compounding using multiple rotors in tandem. This principle appears to be applicable to wind turbines as well.

This project investigated the power production and performance characteristics of a contra rotating wind turbine system.

Proposed Outcomes:
The goal of this project was to determine the feasibility of improving wind energy conversion efficiency by utilizing a contra rotating wind turbine system. The researcher established the following project objectives:

1. Investigate performance of a contra-rotating dual rotor system as a means of enhancing wind energy conversion efficiency, targeting reduction of energy costs ($/kWh) by 30%.
2. Develop designs for the contra-rotating dual rotor system for a low cost wind turbine ($/kW). The designs should allow early and economical transition to the utility scale wind turbines.

Actual Outcomes:

1. The project fabricated a prototype contra-rotating wind turbine system. The project team then installed the assembled unit on a 50- ft tower at the Oak Creek Energy Systems facility in Mojave, California. Tests conducted over a period of four months showed:
   a. At lower rotor speeds, energy extraction increased by up to 40% over an equivalent single rotor wind turbine.
   b. No detectable buffeting of the turbine blades occurred.
   c. Bending stress on the supporting tower was reduced by the contra rotating system over the single rotor system.
2. The study identified design solutions to the problem of transmitting the net torque generated by a contra-rotating turbine system to an existing electrical power-generating unit. Because these solutions make use of existing hardware, they depend on the configuration of the existing equipment on the targeted wind farm. Two separate solutions are presented.

Conclusions:

1. The field tests demonstrated that power conversion efficiency could be increased up to 40% by using a wind turbine with a contra-rotating rotor system versus a wind turbine with only one

rotor. This increase will result in increased energy generation from a given tower installation, but the researcher did not relate back to the reduced energy cost target.

2. Power conversion efficiency was high at low rotor speeds, suggesting applicability of contra rotating turbines to large utility scale wind turbines that rotate at 16-20 rpm.
3. Buffeting can be a fatal problem leading to premature failure of a wind turbine. It is encouraging that buffeting did not occur on the contra rotating rotor system.
4. The contra-rotating system reduces bending stress on the tower. This reduced bending stress results when the torques produced by two rotors counterbalance each other.
5. There is a good prospect for a utility scale contra rotating turbine system to produce from 30% to 50% more energy from high and low speed wind farms in California. This prospect needs confirmation through further testing.
6. If the prospect of extracting additional energy as suggested in item 5 above is confirmed, this technology should find a market in the retrofit of existing wind farms. The project identified two fundamentally different approaches:
    a. If the existing generator is provided with a dual winding (twin- generator) system, the same generator can be used for higher power rating. In this case, the shaft rotation power from the contra-rotating turbine is reversed in direction by a torque hub and combined with the existing turbine's power, both rotors driving the same generator.
    b. If the existing generator is not provided with a twin-generator system, a second generator and the contra-rotating turbine can be added in a back-to-back fashion to the rear of the existing generator. This may require a new mounting platform or simply brackets to attach to the existing platform.

Benefits to California:
Successful commercialization of contra-rotating wind turbine systems could reduce the cost of electricity to California ratepayers, promote increased power production, and stimulate business and employment opportunities in wind turbine industries within California. These benefits would occur by producing more wind-generated power per acre of land and by using common facilities such as support towers and possibly generators. At this time, wind- generated electricity is the most economical renewable energy. In California, wind energy production is highest in the afternoon to early evening time period. This is also the time that demand for electricity peaks in California. Currently these demand peaks are met with relatively costly simple-cycle combustion turbines. Increasing wind power production would offset the need to run these "back- up" turbines. Air quality would also improve since simple cycle combustion turbines have relatively high emissions of NOX and CO.

Recommendations:
The present study demonstrated the feasibility of a contra-rotating wind turbine system by using readily available components. The next step is to design, build and test a utility scale, grid connected wind turbine system. A major task in the next steps is to assess cost effectiveness of the counter-rotating design.

The suggested next steps are as follows:

1. Select a grid-connected environment in the 50 to 100 kW power rating range.
2. Design and build the units to a cost target.
3. Team with a wind power production company to install one or more units.
4. Conduct power production performance studies with grid-connected power loading for a period of one year or more.
5. Assess the cost-effectiveness of dual rotor system versus the single rotor system using available data.
6. After successful completion of this study, plan to transition the technology by licensing to manufacturers or utility providers.

Project Status:

- 100% Completed.
- Completed on Schedule.
- Completed within Budget.
- Final Report Completed.
- Feasibility Analysis Report Completed.

Dev/Char of Improved Dye-Sensitized Nanocrystalline Solar Cells

EISG Grant Number: 99-10
PIER Area: Renewables
Principal Investigator: Jin Zhang (831) 459-3776
Organization: University of California, Santa Cruz
Grant Amount: $75,000
Status: Completed

Project Description:
A research group at the Swiss Federal Institute of Technology in Lausanne, Switzerland has developed a potentially low cost solar cell based on "sensitized" organic dyes and titanium dioxide, (TiO2, a material used in white paint). The Swiss technology has an experimentally determined, overall sunlight to electrical energy conversion efficiency of 7 -10 % under direct and diffuse sunlight. While this conversion efficiency is lower than the approximate 15 % of commercially available solar cell technology, the solar cell based on organic dyes and titanium dioxide offers advantages including environmentally friendly components, low temperature processing, and potentially lower costs to consumers. Calculations indicate that solar cells of at least 10 % efficiency could be realized at less than $3 per Watt cost using the proposed technology. This may be competitive with conventional electricity generation in selected applications, and the approach could open up new markets in flexible solar cells used for consumer applications such as computers and cell phones, as well as in grid-connected distributed power generation. These markets are already over 100 Megawatts per year at a cost of approximately $6 per watt. Patents for the new technology have been issued. To reach new markets the researchers may need to file additional claims for intellectual
property protection.

Liquid electrolytes are volatile. Solar cells produced with liquid electrolytes suffer from reduced reliability and lifetime. The purpose of this project was to prove the feasibility of a method to reduce these technical shortcomings. While the existing state of the art of the new technology holds the promise to reduce costs for solar generated electricity, the reduced reliability due to the volatile liquids limits potential application of this technology. This project involved replacing the liquid electrolyte with suitable solids.

The researcher chose conductive polymers as the replacement for the liquid,
specifically, polythiophenes.

Proposed Outcomes:
The goal of this project was to determine the feasibility of replacing the volatile liquid in the dye sensitized nano-crystalline solar cell with conductive polymers. The following project objectives were established:

1. Determine if charge transfer can occur via the polythiophenes, and whether this material itself absorbs light.
2. If polythiophene does absorb light, determine if that absorption interferes and competes with light absorption by the dyes used in the state of the art device, and whether it can replace these dyes.
3. Measure the charge carrier dynamics of the dye, polymer, and TiO2 suitable for this application. Construct an energy band diagram to better understand the functioning of solar cell with conductive polymers, and to optimize the solar cell output. Select an appropriate material based on these data.

4. Synthesize nano-crystalline TiO 2 films.
5. Fabricate, test and optimize solar cells using the materials exhibiting the best properties.

Actual Outcomes:
The following outcomes were achieved:

1. The researcher determined that polythiophenes could transfer charge and selected a hole-conducting polythiophene polymer. The researcher performed extensive tests on the absorption of light by the polythiophene and found that some polythiophenes can be both light absorbers and charge transporters.
2. One polymer, P3UBT, can act as a dye and a hole conductor possibly eliminating the need for a separate dye. This approach suffers from low mobility of charge carriers in the organic layer leading to low solar conversion efficiencies. For that reason, the grantee suggested using a separate dye and a separate transparent version of the polythiophene polymers along with porous TiO2 in future work. A transparent polythiophene polymer will not interfere with light absorption by the dye.
3. This project measured charge carrier characteristics, constructed energy band diagrams and developed techniques to characterize materials suitable for the dye based solar cell. While specific polymer and dye combinations are recommended as a result of this work, the researcher recommends future work that will focus on materials with higher surface areas and therefore higher photocurrents.
4. The project synthesized TiO 2 films using sol gel depositing technique.
5. The researchers fabricated solar cells using sol gel deposited TiO 2 and the above polymer. They tested solar cell devices, and found that the junction properties are unique as well as efficient for the geometry selected. However the cells they created were single layer cells with an efficiency of only 0.032%. The grantee estimated that with 200 layers like the one reported, a solar cell with a solid electrolyte could be over 6% efficient. No further optimization work was reported.

Conclusions:
The researcher utilized TiO 2 materials, together with solid polymers to fabricate solid-state solar cells. These devices produced encouraging results given the fact that only a thin layer of polymer and a single layer of TiO 2 were utilized. Current voltage characteristics of devices fabricated using this technique are consistent with the energetics of the components, and are encouraging when compared to existing technology based on sensitization mentioned above. The researcher obtained expected results from a single layer of sensitizer (polymer), and a flat TiO 2 surface given the energy band diagram, and spectroscopic characterization. With the techniques and materials developed in this project, the researcher measured voltages over 0.8 V and current densities of 100 micro-amps per square centimeter of active area with one sun of illumination. These results, reported for the model system, are not related to performance needed in a commercial device. There is no indication in the final report of the magnitude of improvement needed for commercial success.

The goal of this project was to determine the feasibility of replacing the volatile liquid in the dye sensitized nano-crystalline solar cell with conductive polymers. Based on results, commercial feasibility may be possible if the emphasis is now placed on utilizing porous or multi- layer materials. The most critical issue for future work will be the extension to higher surface area materials that can result in higher photocurrents. Specific performance criteria should be established before subsequent work is begun.

Benefits to California:
At this point in the research, potential benefits to California can only be qualitatively estimated. The experimental results support the feasibility of replacing the liquid electrolyte with a conductive polymer. The long-term benefits to California ratepayers include lower cost solar cells. The cost of future cells produced with this technology is difficult to determine at this time. However, if the lower cost ($3 per watt) is achieved, more ratepayers will install grid-connected solar power generators. These installations will help to diversify the California fuel portfolio. Increased utilization of solar energy to replace peaking power plants will greatly reduce the levels of CO2 and NO_x in the atmosphere.

There are other solar cell technologies that promise similar benefits. Sharp Corporation recently announced a new solar cell that employs organic pigments to change light into electricity. Sharp succeeded in switching the necessary electrolyte in the organic solar cell from the liquid state to a solid-state material. Sharp estimates that this new innovation will cut the cost of solar cells by one half. Sharp did not report an absolute cost or price.

Project Status:
- 100% Completed.
- Completed on Schedule.
- Completed within Budget.
- Final Report Completed.
- Feasibility Analysis Report Completed.

Direct Operation of Solid Oxide Fuel Cells on Natural Gas

EISG Grant Number: 99-30
PIER Area: Environmentally Preferred Advanced Generation
Principal Investigator: Scott Barnett (847) 491-2447
Organization: Northwestern University
Grant Amount: $74,958
Status: Completed

Project Description:
This research project targeted the generation of electricity using fuel cells with pipeline quality natural gas. A combination of factors – low noise, high efficiency, ultra- low emissions, and the ability to utilize readily-available natural gas – make fuel cells a generally desirable generation method.

Most fuel cell systems consume hydrogen derived from natural gas using some form of fuel processor. However, the fuel processor adds considerable complication and expense to fuel cell systems, exacerbating the problem of bringing costs down to competitive levels, especially for smaller plants. Until recently, it has not been thought possible to operate fuel cells directly on hydrocarbons. Recently low-temperature solid-oxide fuel cells (SOFC) have operated directly on methane. This demonstration signals an important new opportunity for making simple, cost effective fuel cells. Fuel cell operation on pipeline natural gas is considerably more difficult than operation on pure methane because pipeline gas contains higher hydrocarbons. This project developed a fundamentally new type of fuel cell anode with a specific anode composition. This anode was successfully tested on propane, a higher hydrocarbon constituent of natural gas.

Proposed Outcomes:
The goal of this project was to determine the feasibility of anodic fuel conversion for a SOFC operating directly on natural gas. The key innovation was to develop the anode composition that satisfied the requirements for fuel cell operation. Subsequently the researcher verified that the higher hydrocarbons present in natural gas could be electrochemically oxidized without carbon deposition at the fuel cell anode. The following project objectives were established:

1. Develop multiple SOFC anodes based on Ceria with reduced Ni content and Ru-Ceria. During the project a third composition using a conductive ceramic was added.
2. Eliminate carbon coking on the anode when the SOFC is operating on propane. Characterize each anode performance by scanning electron microscopy for detection of carbon on the anodes, impedance spectroscopy, and fuel-cell current-voltage measurements.
3. Verify anode performance in a fuel cell stack. Select the most promising anode compositions for natural gas operation. Incorporate the selected anodes into fuel cells and test as a function of fuel composition and temperature.

Actual Outcomes:

1. Ceria-based anodes with reduced Ni content, Ru-Ceria anodes, and anodes using a conductive ceramic with greatly reduced Ni were constructed. These anodes were evaluated and found to exhibit the required physical characteristics of porosity and conductivity. The conductive ceramic anode reduced the function of the metallic component to that of a pure catalyst. This allowed the researcher to make a major reduction in the amount of noble metal in the catalyst.

2. The anodes were characterized. Impedance spectra were found to be acceptable. Coking on the anodes was evaluated. Results showed that Ru and Ni provide similar electrochemical performance. Less coking was found on the anodes with reduced metal fraction. However, at very low metal content there is insufficient conductivity in the anode. From these data the research developed the innovation of replacing the metal with a conductive ceramic. This is a key outcome of this project. The innovative anode is composed of three materials, an electronically conducting ceramic, ionically conducting ceramic, and a metallic catalyst. It is highly resistant to coking.
3. Ceria-based anodes with reduced Ni content (Ni-GDC) and the ceramic Ni anodes were chosen for fuel cell testing. Initial performance using hydrogen fuel and air indicated only small differences between the two anode compositions. All subsequent testing focused on the ceramic Ni anodes. Performance using methane and air was found to be similar to known performance of prior methane fuel cells. When operating on propane fuel and air the ceramic Ni anode demonstrated improved performance when compared with the Ni-GDC anodes. Further, after several hours of operation at peak power the ceramic Ni anodes were free of coking while the Ni-GDC anodes showed heavy carbon deposition (gram quantities).

Conclusions:

1. This project has verified the feasibility of operating solid-oxide fuel cells (SOFC) directly on pipeline quality natural gas. In California the gas is composed of methane and higher hydrocarbons with controlled amounts of sulfur in the form of Mercaptans, an odiferous sulfur compound deliberately added as required by law for safety purposes. It is expected that these Mercaptans would be removed from the fuel fed to any operational fuel cell to avoid poisoning of the metallic catalyst. Removal techniques include use of activated carbon filters, zinc oxide or zinc acetate.
2. This project tested SOFC performance on higher-hydrocarbon components of natural gas, and showed that the fuel cells can be operated with propane.
3. After testing Ni-Ceria and Ru-Ceria anodes, the researcher determined that anodes with very low Ni content, using a ceramic conductor to provide anode conductivity, yield good performance. That is, they provide fast electrochemical oxidation, and hence high power densities, without carbon deposition.
4. This researcher utilized two ceramic constituents with an embedded metallic catalyst in his design approach. Because the relative amounts and the chemical nature of each of the three constituents can be altered to match a specific fuel or operating condition, a designer has great flexibility for improving fuel cell performance.
5. A major advantage of the new anodes is that they can be cyclically reduced and oxidized without degrading performance. This redox cycling is expected to occur regularly on periodic shutdown of small generators when the fuel flow is stopped. Thus, the new SOFC anodes may enable new applications of SOFCs that rely on the direct use of high energy density hydrocarbon fuels or feature frequent on-off cycling (e.g. portable power, auxiliary power units, and distributed generation.) While early stability tests of these anodes are promising, longer-term tests are needed.

Benefits to California:

The PA's assessment is that the benefits to be derived by the California electric ratepayer from the continuation and successful conclusion of this line of research accrue in the area of distributed generation. Distributed generation benefits directly by the availability of a quiet, low emission, cost effective power source using a readily available fuel. By operating on both natural gas and propane, these fuel cells can be configured as uninterruptible power sources for the communities they serve. By operating at an estimated thermal efficiency of from 40% to 60%, these fuel cells reduce the amount of carbon dioxide produced per unit of electricity, thereby reducing the detrimental effect from this assumed greenhouse gas. By providing high grade heat, ~700 oC as a byproduct, the overall fuel efficiency of the distributed generation network can be improved substantially by situating the generator facilities as combined heat and power installations. Such a configuration is feasible given the quiet, non-polluting nature of fuel cells.

Recommendations:

In order to advance this technology towards commercialization, R&D efforts must be carried out to improve and optimize the structure and composition of the new ceramic anodes for use with natural gas. This research should investigate and determine the following:

1. The effects of sulfur-containing compounds should be assessed, in order to determine whether a sulfur cleanup step will be required for the SOFC generators using these new anodes. If filtering of the gas is required, used filters should be evaluated for toxicity and their proper disposal should be considered.
2. The long-term behavior of SOFC fuel cells incorporating these anodes must be assessed.
3. The anode development work should include the criteria that the anodes achieve stable long-term performance.
4. The long-term test should include frequent cycling of operating conditions, including exposure to air, as expected in the real operation of small SOFC generators.
5. Finally, the anodes should be used as the support element of thin-electrolyte SOFCs. This will not only provide the best overall performance, but it matches the SOFC configuration being commercially developed.

This research effort should be undertaken in tandem with a commercializing partner. If these anodes can be incorporated into the existing SOFC configuration of commercial interest, it will maximize the commercial prospects for this new anode technology.

Project Status:

- 100% Completed.
- Completed on Schedule.
- Completed within Budget.
- Final Report Completed.
- Feasibility Analysis Report Completed.

Energy Shaver-Thermal Energy Storage Device for Air Conditioner

EISG Grant Number: 99-16
PIER Area: Buildings End-Use Energy Efficiency
Principal Investigator: James Lester (970) 963-2517
Organization: Redstone Engineering
Grant Amount: $74,695
Status: Completed

Project Description:
This project researched the feasibility of using a thermal energy storage device based on a salt hydrate to improve the performance of vapor-compression air conditioners of less than 5 tons capacity. A device using a salt hydrate to provide a relatively cool heat sink for the air conditioner working fluid during the hot part of the day was investigated. The stored heat is rejected from the salt hydrate to cooler night air to complete the cycle. With this device, an air conditioner can be up to 30% more efficient on very hot days. The schematic shown illustrates this system.

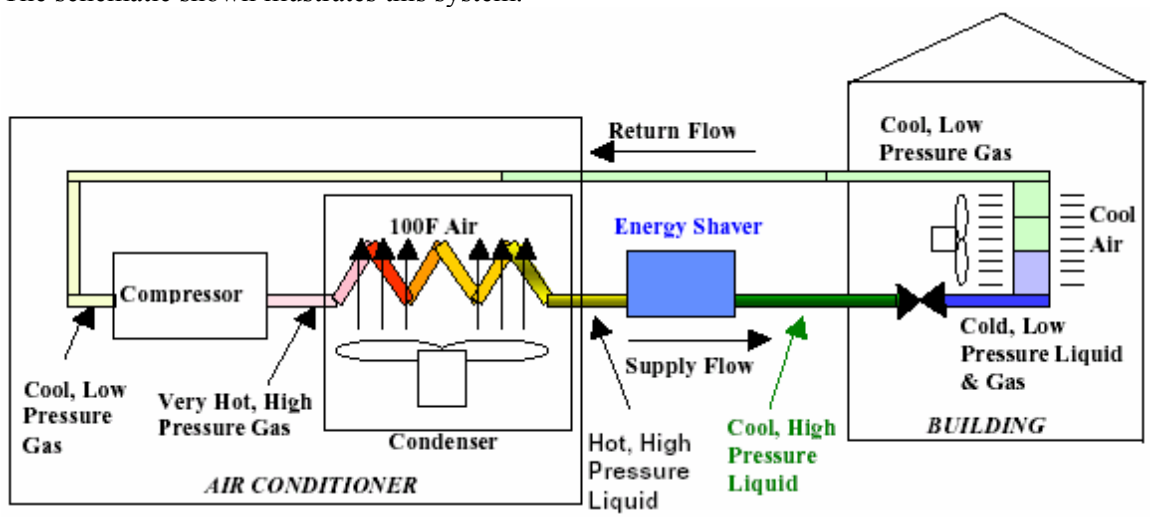

Thermal energy storage systems that use salt hydrates have been used for many years in solar heating systems. The innovation in this project is the use of salt hydrates for energy storage on the hot side of a vapor compression air conditioner.

Proposed Outcomes:
The goal of this project was to prove the feasibility of using a salt hydrate energy storage device to improve the efficiency of existing vapor-compression air conditioners. The researcher established the following objectives:

1. Perform preliminary modeling of the air-conditioner/energy storage system.
2. Model the salt hydrate containers.
3. Select the energy storage system materials.
4. Model and bench test the heat exchanger and related components.
5. Perform final modeling of the energy storage system.

Actual Outcomes:

1. The researcher wrote a FORTRAN computer program to model air-conditioning systems of 5 tons or less. This model used the FORTRAN-compatible Gaspak^{tm} fluid properties program package to calculate refrigerant properties. A reciprocating compressor for the model was chosen. Future researchers must modify the model to incorporate the more common scroll compressors. The project exercised the model for numerous sets of conditions.
2. This project found that an acceptable salt hydrate container is one that meets the heat transfer requirements with a pressure loss and airflow that can be obtained from a low cost fan. The

surface area required for heat transfer for a 5-ton unit is 6306 in2. The project analyzed several container wall geometries for the heat exchange surfaces. The baseline configuration is a cylindrical annulus 48 inches high, 17.5 / 20.5 inches inside/outside diameter, and having pleated surfaces.

3. The researcher, through review of literature, identified several useful hydrates: calcium chloride hexahydrate, sodium sulfate decahydrate, disodium phosphate dodecahydrate, and mixtures of sulfate and phosphate hydrates. These hydrates are compounds of salts and water in which the water bonds to the salt molecules when the temperature drops below the freezing point of the hydrate. This gives the hydrate a large latent heat of fusion that is released when the water/salt solution freezes. The selected mixture was 5/35/60% phosphate/sulfate/ water with 3% borax additive.
4. The researcher substituted water for Freon^{tm} in the system bench test. Tube spacing, container wall spacing and the hydrate were the same as in the planned, full-size energy storage device. For the heat flux per degree of temperature difference to be the same for the full-size energy storage device and the bench-test energy storage device, a scaling factor was calculated. Using this scaling factor the researcher built a bench-test heat exchanger tube six feet long to maintain equivalent heat transfer.
5. The project iteratively updated the model of the energy storage device and incrementally improved it during the project bench test. The researcher incorporated the results of the tests as well as the empirically determined heat transfer coefficient in the model.

Conclusions:

The project results indicate the technology is feasible and the salt hydrate energy storage device could provide measurable benefit when installed in an existing system. On a new or replacement system, the user would see immediate cost savings from reduced demand charges and energy consumption. The researcher suggests new replacement air conditioners equipped with the salt hydrate energy storage device could be smaller, therefore, they could cost the same as or less than the larger units they replace. This would offer an immediate payback.

1. The system modeling produced the following conclusions:
   - Project results indicate a demand reduction of 25% and an energy savings of 23% are possible when a 3-ton air conditioner augmented with the energy storage device replaces a 4-ton air conditioner. (The researcher made an unwritten assumption that comfort levels would be equivalent.) Energy savings are negligible for a simple retrofit into an existing air conditioning unit.
   - Retrofit applications require modifications to the air conditioner evaporator to realize maximum benefits.
   - The energy storage device is best suited to applications where dehumidification is usually required.
   - The melt/freeze cycle operates with normal ambient conditions.
2. Data from the salt hydrate modeling and testing led to the following conclusions:
   - A nucleating agent is required to stabilize the refreeze temperature.
   - Some salt settling occurs with the selected mixture, resulting in a loss of thermal capacity of about 5%. Mixing or some other measure is needed to maintain long-term thermal performance. Additional energy is required for the mixing operation.
3. The researcher identified and used effective combinations of known salts for the energy storage device.
4. Bench tests led to the following conclusions:
   - The scaled version of the Freon^{tm}-to-salt heat exchanger design did not perform as well as expected. The outlet temperature rose 22°F by the end of the test when the model predicted a rise of 18°F.
   - Although the performance is adequate, additional heat transfer area (longer tubes or extended surfaces) is necessary to meet the stated heat transfer requirements.
5. The project produced data that has been incorporated into a model of the system. Future researchers in this field can use these data and the updated model.

Benefits to California:
Electric power demand exceeds supply during hot summer days in many areas of the state. A large percentage of peak power demand is driven by air conditioning demand. Expanding new house construction in hot areas of the state is magnifying the problem. Almost all of these houses are equipped with air conditioning.

The salt hydrate energy storage device tested in this project would have a measurable impact on the California's energy consumption if it were widely implemented in new and replacement applications. Negligible benefits were found for simple retrofit. A significant portion of California has weather suitable for using this thermal storage device.

Recommendations:
Two major areas requiring further development are mixing of the salt hydrate to ensure repeatable, long-term performance and product packaging to integrate the salt hydrate energy storage device with new or existing air conditioning equipment. Salt based energy storage systems, while offering great advantages to energy storage, have problems of heat transfer, settling, corrosion, and often cost. The PA recommends research work on these problems. Once solutions are found, the researcher should team with a manufacturer of air conditioning equipment to test a prototype energy storage system for energy performance and user comfort.

Progress Made Subsequent to the Initial Report:
The Energy Shaver is now called the Therma-Stor Cooling Booster (TCB).

The TCB has been developed and refined over the last four years. Each iteration resolved technical challenges and improved the design. Two major technical challenges that have been resolved are effective heat exchange with and long-term performance of the salt hydrate. The TCB is now in the I&I Category 2, Stage 3 Development stage.

A residential field test in the summers of 2001 and 2002 in Boulder, Colorado proved that the TCB increases efficiency and cooling capacity. In the test, a two year old 10 SEER 4-ton air conditioner was replaced with a new 10 SEER 3-ton air conditioner incorporating the Therma-Stor Cooling Booster. The extra cooling provided by the TCB enabled the 3-ton unit to cool the 2450 square foot residence to a low of 73°F with an outdoor temperature of 95°F. This was two degrees warmer than the 4-ton unit could achieve. The cooling demand, however, was easily met when the thermostat was set at 75°F. Energy measurements showed electric current demand dropped from 19.5 amps to 14.5 amps at 230 VAC, thus reducing peak demand by 1.15 kW. The TCB boosted the cooling well into the evening, at which time extra cooling was no longer needed. The fan consumed approximately 1.5 kWh each night to reject heat from the TCB and prepare it for the next day. Figure 1-2 shows the 4-ton unit and the 3-ton unit with the TCB. Figure 1-3 shows test data of the 3-ton unit with and without the TCB. Note that when the TCB is on, the Freon temperature at the TCB outlet (blue line) is much lower than when the TCB is off. This colder Freon produces more cooling at the expansion valve and evaporator in the house.

Although this test successfully replaced a 4-ton unit with a 3-ton unit, the proposed program will take a more conservative approach. New units having ½ ton less rated cooling capacity than those typically required will be installed.

Project Status:
- 100% Completed.
- Completed on Schedule.
- Completed within Budget.
- Final Report Completed.
- Feasibility Analysis Report Completed.

Energy-Efficient Air-Handling Controls

EISG Grant Number: 00-12
PIER Area: Buildings End-Use Energy Efficiency
Principal Investigator: Clifford Federspiel (510) 418-3392
Organization: Federspiel Controls
Grant Amount: $75,000
Status: Completed

Project Description:
A large fraction, in some cases as much as 24%, of the energy consumed in buildings is used to operate fans that move air for heating, ventilating, and air-conditioning (HVAC). Much of the fan energy is wasted because fans are not operated in the most efficient manner. Inefficient fan operation can increase cooling energy consumption as well as fan energy consumption when their operation causes more air to be cooled than is necessary. Furthermore, inefficient operation of HVAC fans increases grid peak demand when electricity demand is high.

If fans could be operated efficiently, moving only the air needed, when it is needed, then savings would accrue in two areas. First, the fans would operate for less time, reducing their energy consumption by 20 to 40% and second, less fan operation means reducing the mass of air that requires cooling. This excessive or wasted cooling energy is estimated to be 10% of the total.

The researcher in this project proposed to develop new, more energy efficient strategies for operating air-handling equipment. To quantify the potential savings of these strategies the researcher embedded them into an analytical model. The model predicts the transient response of pressures, velocities, and temperatures in the system and uses sequential modes of operation to approach the set point. Actual data from a large office building in Oakland, California, were used to calibrate the model. The researcher developed a new model based on two strategies. The first strategy, called "Efficient Air-handling StrategY" (EASY), is a system control that can be implemented with a finite state machine in which states are modes of operation such as "economizer enabled" or "economizer disabled." The second strategy, called "Static Adjustment based on Volume flow" (SAV), employs resetting static pressure based on supply airflow rate. SAV can be implemented as part of EASY or as a standalone strategy. The researcher tested both strategies and found the majority of the benefits derived from SAV.

Project Objectives
The goal of this project was to determine the feasibility of using an intelligent ventilation fan controller to reduce the energy consumption of the fan by more than 20%. The specific objectives of the project were as follows:

1. Develop, using optimization and computer simulation methods, a new energy-efficient algorithm to control air-handling equipment in buildings.
2. Reduce fan energy consumption by 20%-40%.
3. Reduce cooling energy consumption by 10%.
4. Demonstrate stable operation of the fan controls while minimum ventilation, appropriate building pressurization, and appropriate temperature control are maintained at all times.

Project Outcomes:

1. The researcher used an existing model of air-handling systems for a starting point. The researcher calibrated the model using data from the Elihu Harris State Office Building in Oakland, California. The researcher determined optimal system behavior and then identified patterns of behavior that could be encoded as control rules. The rules were designed to achieve nearly optimal performance.
2. The researcher expected reductions in energy consumption from reduction of throttling losses at the control dampers (exhaust, return, and outdoor air dampers) of the air- handling unit. The researcher reported fan energy savings of 26.3% over the base case. However, the researcher chose a system with no static pressure reset as his base case. There are existing control schemes

that use static pressure reset that are reputed
to perform as well as or better than EASY with SAV. When compared with
state-of-the-art systems the strategies developed in this project may or may not have
a comparative advantage.

3. The researcher expected gains in cooling energy to arise from better control over outdoor airflow rates. Existing systems using fixed minimum damper positions for regulating outdoor airflow can over-ventilate when it is hot, increasing cooling energy consumption. The project strategy directly controls outdoor airflow rate. Cooling energy savings were reported to be 17.4%. Again, the researcher compared his results to a base case with no static pressure reset. The comparative advantage to state-of-the-art systems may be considerably less.
4. The researcher invented a simpler way to model the behavior of fans. The researcher could not get the optimizer code to converge to the best operating point. Instead, he used trial and error methods combined with knowledge of existing strategies incorporating his findings into the EASY code. With these modifications, the models were stable and met minimum HVAC conditions required for a building. The researcher reported a faster system response time for his control system.

Conclusions:

The feasibility of the intelligent fan control strategy was proven.

1. The control strategies developed in this project cause a fan system to use less energy than the base case while ensuring that control requirements are met at all times.
2. The control strategies can reduce fan energy consumption by a much as 26.3% when compared to a system without static pressure reset.
3. The control strategies can reduce cooling energy consumption by as much as17.4% when compared to a system without static pressure reset.
4. The control strategies appear to be easier to tune than existing strategies. They exhibit faster response time when tuned properly. System settling time was reduced to 30 minutes from two hours.
5. The researcher should clearly establish the technology baseline against which he is calculating his energy savings calculations. His should compare to the best
available technology.

Benefits to California:

The project demonstrated the proposed control strategies could reduce average power by 0.23 W/ft2/year in buildings with variable air volume (VAV) air-handling units. This is a large potential reduction in energy consumption. The researcher's calculation is based on the premise that static pressure reset is neither widely employed nor available. Based on data from DOE, the researcher estimated the proposed control strategies, if implemented in all applicable buildings, would reduce energy costs by $928 million/year nationwide and $171million/year in California. Primary beneficiaries would be the owners and/or operators of large air-handling systems incorporating variable air valve technology. Other ratepayers would benefit from the decreased load on the grid during peak demand periods.

Recommendations:
The researcher is encouraged to survey manufacturers of controls for VAV systems to determine what is commercially available. Energy savings calculations should be based on the best available technology rather than the most commonly deployed. Alternately the researcher could find his concept provides large energy savings at costs significantly lower than the best technology available today. If that market study confirms a large energy savings potential, then a field test is recommended to quantify and validate the energy efficiency benefits in a large building. The tests should be conducted during the summer so cooling energy benefits and fan energy benefits can
be quantified. A widely accepted test procedure should be followed to establish credible data. Methods for commissioning SAV to produce the largest energy benefits could also
be investigated.

Project Status:
- 100% Completed.
- Completed on Schedule.
- Completed within Budget.
- Final Report Completed.
- Feasibility Analysis Completed.

Increasing Efficiency of Geothermal Energy Generation with High Resolution Seismic Imaging

EISG Grant Number: 00-10
PIER Area: Renewables
Principal Investigator: Dimitri Bevc (650) 969-3886
Organization: 3DGeo Development, Inc.
Grant Amount: $75,000
Status: Completed

Project Description:
This project targeted an important energy source in California, geothermal energy. The researched seismic imaging technology has the potential to reduce the cost and risk associated with exploration and development of geothermal resources. This technology may lead to increased utilization of California's extensive geothermal resources, which provide an environmentally sound alternative to fossil fuels.

High-resolution reflection seismic imaging has been very successful in oil and gas exploration. It is the number one pre-drilling risk reduction technology and is applied on a routine basis to oil and gas exploration and production projects. Seismic technology has substantially reduced exploration cost, exploration risk, and environmental impacts. Despite its promise, reflection seismic imaging has not been applied extensively or with great success to geothermal exploration.

This project has applied existing, tested, oil and gas exploration algorithms to geothermal field seismic imaging data. The results demonstrated the potential utility of high-resolution reflection seismic imaging applied to geothermal objectives. They represent an improvement over previous research results and demonstrate that application of state-of-the-art seismic imaging technology and methodology may be beneficial in geothermal applications.

Proposed Objectives:
The goal of this project was to determine the feasibility of applying high-resolution reflection seismic imaging in the geothermal environment to map geothermal reservoir zones. The researcher established the following project objectives:

1. Modify imaging algorithms for application to the seismic imaging data acquired at the Coso geothermal field.
2. Preprocess reflection seismic data acquired at the Coso geothermal field.
3. Generate a high-resolution wave equation migrated image of the Coso geothermal field.
4. Determine the validity and accuracy of seismic imaging by comparison to drilling data, other geological/geophysical information, and prior processing results.

Actual Outcomes:

1. The researcher made minor modifications to the algorithms to read and to fully utilize the Coso geothermal field seismic imaging data.
2. The researcher implemented a near-surface velocity model using first-arrivals from the seismic data and turning ray tomography inversion. This implementation removed near surface distortions.
3. The researcher generated high-resolution wave equation migrated images of the Coso geothermal field using each of the following methods: a) 3DGeo's ComAz wave-equation migration algorithm, b) pre-stack time migration, c) post stack time migration, and d) pre-stack Kirchhoff depth migration.

4. The researcher compared the images to prior existing images, published geological and geophysical information, and analyses. The project compared the velocity models to results previously obtained by other workers. The project validated the new high- resolution images against the known geology.

Conclusions:

1. This project has taken the first step in validating the application of 3DGeo's proprietary seismic imaging technology to a California geothermal data set.
2. Geothermal areas generally produce challenging seismic data that push the limits of processing and imaging technology. This project has demonstrated the challenges can be overcome through the proper application of state-of-the-art seismic imaging technology.
3. Active source reflection seismology appears to offer benefits to geothermal exploration and development. High quality seismic data processing is important to obtain accurate and usable imaging results. The quality processing is not limited to the high-end imaging algorithms such as Kirchhoff migration, but also is valuable in the preprocessing applied to data. Statics and pre-stack noise attenuation appear to be important to obtain a good imaging result.
4. The images generated in this project appear to support the proposed methodology for processing geothermal field seismic data. The major goal of this study was to demonstrate that seismic imaging of structures could be obtained in heterogeneous geothermal environments. Therefore, the researcher assessed the success of the experiment by reference to the seismic imaging results themselves and the fact that knowledgeable geophysicists could identify known geologic structure from the images. While interpreting the images remains an art, there does appear to be more details in the new images that have a positive correlation to the known geology.

Benefits to California:

Because this technology can lower the cost of finding and producing geothermal energy the electric ratepayer will receive economic and environmental benefits. The California Legislature recently passed SB1078 that mandates utilities to provide 20% of their electricity from renewable resources by 2017. Technologies such as the one demonstrated in this grant will both lower the cost of developing the required resources, and also may lead to discovery of more geothermal resources within the State. The increased utilization of California's renewable geothermal resources will benefit the State as a whole by reducing the need to import and consume increasingly costly conventional fuels. Reduced consumption of fossil fuel will also improve California's air quality.

Recommendations:

The PA recommends further processing of the remaining Coso data. Researchers should acquire another 2-D or preferably 3-D survey in Coso or elsewhere for further imaging and demonstration of the technology in a larger more in-depth effort. Further development of this technology through a large-scale demonstration will clarify its capability by giving an example of its full potential.

Project Status:

- 100% Completed.
- Completed on Schedule.
- Completed within Budget.
- Final Report Completed.
- Feasibility Analysis Completed.

Modeling Greenhouse Temperature for Energy Efficient Production

EISG Grant Number: 99-08
PIER Area: Industrial/ Ag/ Water
Principal Investigator: Heinrich Lieth (530) 752-7189
Organization: University of California, Davis
Grant Amount: $75,000
Status: Completed

Project Description:
California is the leading state in the US floriculture industry, with wholesale value over 700 million dollars per year. With more than 115 million ft2 area under greenhouse cover, California has the largest area of protected crop production facilities in the nation [National Agricultural Statistics Service, USDA. 1998].

Greenhouse agriculture requires considerable energy for cooling in the summer and heating in the winter. While computers have been incorporated into most greenhouses, no significant environmental control software exists. Each crop that might be grown in a greenhouse has different temperature requirements. Proper use of an accurate crop model embedded within greenhouse environmental control software will enable achievement of the optimum energy efficiency for the greenhouse crop combination.

Proposed Outcomes:
The goal of this project was to determine the feasibility of embedding a sufficiently detailed and accurate model within the greenhouse environment control software to enable optimum energy efficiency for the greenhouse crop combination. The researchers established the following project objectives:

1. Create and integrate greenhouse climate models with crop models.
2. Validate the integrated model.
3. Develop general-purpose energy management software tools that growers could use to assist in greenhouse energy management.

Actual Outcomes:

1. A full-sized, large-scale simulation model was developed that simulates the greenhouse climate in relation to the control objectives, the outside climate, the crop growing in the greenhouse, and the various management practices. This model was then implemented on a computer simulation system. The size and complexity of the model was such that the high-end computer workstation it was hosted on would only simulate short time frames. The researcher could not fully exercise the computer model due the excessive memory demands of the program, even when running on a high capacity workstation. Evaluation of this implementation was not completed.
2. Partial validation of the model was performed. The simulation model behavior was satisfactory in most areas except for its inability to accurately predict the air temperature and humidity inside the greenhouse in the winter.
3. A software tool was developed that allows growers to calculate temperature set points in relation to rose-crop development for cut-flower roses. Presentations and training sessions at national grower meetings (March 30, 2001 Denver, Colorado) have been conducted to assist growers in using the software. The software tool was made available to the public through publication on the web to allow easy access by the greenhouse operators. The Principal Investigator has indicated that this software tool has been downloaded for use by rose growers in California.

Conclusions:

1. Considerable insight was gained into the many variables that impact greenhouse thermal properties. The complexity of the modeling and simulation was greater than originally anticipated. The size and complexity of the model and its inability to run effectively, even on a high end computer workstation, makes the model impractical for real time greenhouse control in

its current configuration. The accuracy of the integrated model was impacted by errors contained in existing models/data.

2. Further work is needed to validate and optimize the model for accuracy before it can be used for comprehensive energy simulations. Feasibility of integrated greenhouse climate models with crop models has yet to be established.
3. Due to the complexity of the various crop models it may not be possible to create general purpose energy management software tools that could be applied to a variety of crops. Instead, it appears that the software tools will need to be tailored to specific crops, which will require considerable research and development.

Benefits to California:
Greenhouse growers will benefit directly from the tool that was developed as part of objective 3 of this project. The tool is particularly targeted to cut-flower rose growers, to assist them in selecting temperature set-points that will allow them to schedule crop maturation to coincide with holiday sales. This tool allows growers to maximize profitability by optimizing productivity through precise energy management. Energy use by cut flower growers may be reduced by use of this energy control tool.

Recommendations:
The simulation system, as an analytical tool, will require considerably more work before it will result in widespread practical applications for greenhouse energy management. Additional work is needed that would allow the model to run effectively on a standard computer. The model needs additional development to make it more accurate in the areas of noted deficiency. Specific crop models need to be developed that can be integrated into the greenhouse climate model.

Project Status:

- 100% Completed.
- Completed on Schedule.
- Completed within Budget.
- Final Report Completed.
- Feasibility Analysis Report Completed.

Non-Vacuum Thin-Film Photovoltaics Processes

EISG Grant Number: 99-31
PIER Area: Renewables
Principal Investigator: Chris Eberspacher (805) 987-7258
Organization: Unisun
Grant Amount: $75,000
Status: Completed

Project Description:
Photovoltaics (PV) is a small but rapidly growing sector of California's electrical power generation capacity. For PV to significantly impact the State's economy and quality of life, the cost of PV-generated power must decrease. One of the most promising strategies for lowering PV costs is the use of technologies in which thin films of materials are deposited on inexpensive substrates like window glass. One of the most promising thin- film materials is copper indium gallium selenide (CuIn1-xGaxSe2 or CIGS).

Vacuum deposition processes have difficulty depositing CIGS films on large areas with the precision and control necessary to achieve low manufacturing costs. Non-vacuum deposition techniques provide a simple, low-cost alternative. Preparing fine powders of precursor materials, depositing thin layers of the particulate precursor materials, and sintering the layers into high-quality dense films can form high quality thin films.

Simple, non- vacuum techniques such as spraying and printing can deposit layers of particles on large-area substrates. Exploratory materials research using simple pneumatic spraying yielded cells with 11.7% efficiencies and monolithic multi-cell modules with 5% efficiencies. However, the sprayed layers were not very planar (i.e. flat) and were not very well packed (i.e. dense), and deposition rates and materials use efficiency were low. The aim of this EISG project was to deposit uniform, planar, well-packed layers with high materials use efficiency (MUE).

Proposed Outcomes:
The goal of this project was to determine the feasibility of depositing planar, well-packed particulate layers at high rates with high materials use efficiency (MUE) using non-vacuum techniques. The researcher established the following project objectives:

1. Identify high-MUE, non-vacuum deposition techniques and obtain suitable equipment for experimental evaluation.
2. Develop high-MUE spraying techniques using CIGS precursor materials.
3. Fabricate efficient thin-film PV devices using high-MUE techniques.

Actual Outcomes:

1. The researcher identified high-MUE, non-vacuum deposition techniques and procured suitable equipment for experimental evaluation.
   - Pneumatic spraying resulted in good atomization and excellent spray directionality, but materials use efficiency was low.
   - Without gas assistance, ultrasonic spraying resulted in good atomization, but the lack of carrier gas resulted in poor spray directionality.
   - Gas-assisted ultrasonic spraying yielded good atomization and good spray directionality.
   - Electrostatic spraying at 30 kV yielded relative materials use efficiency gains of 50- 65%, but the deposition pattern was erratic and irreproducible.
   - Casting and spray casting yielded high materials use efficiencies and well-packed, planar layers.
2. The researcher developed high-MUE deposition techniques for depositing layers of CIGS precursor particulate materials.

- The morphology of particle layers deposited by pneumatic spraying varied with spraying conditions.
- Layers sprayed in a manner that facilitated rapid local solvent evaporation exhibited microscopically planar surfaces.
- Layers sprayed using slow solvent evaporation conditions exhibited non-planar surfaces characterized by a network of ridges and valleys.
- Droplet drying mechanisms resulted in observed morphological variations.
- Individual droplets of well-dispersed, well-suspended slurry dried to form rings of particles.
- Networks of ridges and valleys evolved as particles were differentially collected into ridges by the interplay of ring overlap, particle bounce-back, high-angle over spray, and particle/gas lateral flow.
- Spray conditions that facilitate rapid solvent drying mitigated local drying effects that cause non-planar layer morphologies but such conditions reduced materials use efficiency.
- Ultrasonic spraying minimized particle loss mechanisms and yielded higher materials use efficiencies, however, ultrasonic spray deposition resulted in non-planar layers characterized by ridges, valleys, and small agglomerates.
- Spraying under conditions that mitigate in- flight droplet drying sharply reduced the density of small agglomerates but slow-evaporation conditions aggravated the tendency to form a ridges and valleys topology.
- Casting techniques, which use a continuous "wet film" of slurry rather than isolated droplets, circumvented the non-planar morphologies that result from cycles of wetting and drying.
- The substrate-wide drying front inherent to solvent evaporation from continuous wet films minimized the formation of ridges and valleys.

3. The researcher fabricated thin-film PV devices using particulate precursor materials deposited using high-MUE techniques, achieving cell efficiencies of 9.4%.

Conclusions:

1. The results demonstrate high-MUE deposition processes can yield PV devices with the efficiencies needed to fabricate commercially viable products.
2. Cost-effective formation of high-quality PV films using particle-based, non-vacuum processes requires the deposition of reasonably planar, well-packed layers of particulate precursor materials with high materials use efficiencies.
3. Non-vacuum spraying techniques provide the necessary combination of planar, well packed layers and efficient materials use provided one mitigates nozzle-related agglomeration, avoids repeated wetting/drying that can cause non-planar morphologies, and facilitates particle rearrangement that can increase packing densities. The demonstration of efficient spray deposition of planar, well-packed layers lays the foundation for the fabrication of efficient, large-area, thin-film PV modules using non-vacuum processes.

4. Since the techniques developed in this project can yield higher particle packing densities in particulate precursor layers, improvements to final film quality can accrue from adjustments to the reactive sintering processes used to convert porous precursor layers into dense final films.

Benefits to California:
If this line of research reaches a successful conclusion, California will benefit in several ways. Rooftops equipped with solar power systems provide customers the option of generating their own clean, quiet, reliable electricity. Solar power, with its ability to provide electricity at home or at a business site, can help offset the need to purchase electricity and increase consumer autonomy. PV technologies based on thin films can potentially deliver the end- user price reductions necessary to expand the use of PV significantly and aid California ratepayers in realizing a pollution-free, renewable energy option.

Recommendations:
The techniques developed in this project yield efficient small-area solar cells. Further research is needed to test these techniques in the fabrication of larger-area, monolithically integrated, multi-cell modules suitable for commercial production. The next steps are:

- Investigate synergies that might arise from combining improved particle layer deposition techniques with improvements to the layer-to-film sintering processes.
- Apply the high-MUE particulate layer deposition techniques to the fabrication of large area, multi-cell modules.

Project Status:

- 100% Completed.
- Completed on Schedule.
- Completed within Budget.
- Final Report Completed.
- Feasibility Analysis Report Completed.

Novel Composite Membranes for Fuel Cells

EISG Grant Number: 99-19
PIER Area: Environmentally Preferred Advanced Generation
Principal Investigator: Sossina Haile (626) 395-2958
Organization: California Institute of Technology
Grant Amount: $74,942
Status: Completed

Project Description:
Fuel cells utilizing a polymer electrolyte membrane (PEM) have the desirable characteristics that they operate at near room temperature with high power density. A less desirable characteristic of the proton-conducting polymer is that it utilizes water, in the form of the hydronium ions, H3O+, as the proton conductor. This leads to a requirement for water re-circulation and temperature control in the system. In addition, the need to maintain hydration limits the maximum allowable temperature and results in low efficiency in hydrogen-air fuel cells. PEM fuel cell operating at higher temperatures can demonstrate improved efficiency and reduced carbon monoxide poisoning of the catalyst.

If a substitute for the hydrous component in the fuel cell membrane were found, manufacturers could eliminate the need for water re-circulation, relieve thermal management issues and achieve the benefits of higher temperature operation's increase of catalyst efficiency in generating protons at the fuel cell anodes. This benefit is directly applicable to all PEM fuel cells including hydrogen/air fuel cells, and cells fueled by reformed hydrocarbons. These fuel cells are typical of those applied to power generation.

Many solid acids exhibit excellent proton transport properties, but less than ideal mechanical properties and chemical stability. For these reasons, the researcher selected and investigated composite materials utilizing an inert polymer matrix to support the embedded solid acid.

Proposed Outcomes:
The goal of this project was to determine the feasibility of using proton-conducting membranes that do not rely on hydrated polymer for proton transport in a PEM fuel cell. The proposed membranes are composites of inert polymers and "solid acids." The following project objectives were established:

1. Prepare, characterize and evaluate a broad range of polymer/solid acid composite membranes for subsequent development of membrane electrode assemblies.
2. Fabricate and Characterize electrodes and membrane-electrode assemblies. Understand and optimize electrode microstructure.
3. Demonstrate a single cell fuel cell utilizing a sold acid based membrane operating at temperatures between 100 and 180°C.

Actual Outcomes:

1. A large number of composite membrane systems (more than 12) were prepared, characterized and evaluated. The majority of these systems exhibited low conductivities and poor homogeneity, although some, notably composites formed using a ceramic matrix, had conductivities within an order of magnitude of the solid acid alone and excellent reproducibility. Because of the higher conductivity of the solid acid alone, such membranes (in which the inert matrix material was eliminated) were used for further fuel cell development.

2. Membrane electrode assemblies were fabricated using various techniques. The most successful technique discovered was the simultaneous cold-pressing of the electrode/electrolyte/catalyst layers and the electrolyte membrane material. A volatile organic (naphthalene) was added to assure porosity. These assemblies were very thick because of the need to assure impermeability of the solid acid layer.
3. Fuel cells were demonstrated using several variations of electrode/electrolyte/catalyst layers. They can be generally characterized as exhibiting an open circuit voltage ranging from 1 to 1.12 volts, and producing power ranging up to 12 mW/cm2.
4. An unanticipated outcome of this research was the discovery that in a reducing environment (flowing hydrogen) the sulfur content in the solid acid reduced to H2S. The rate of conversion was higher in the presence of a metal catalyst. This chemical reaction limits the long-term stability of these fuel cells. Solid acids not containing sulfur were shown to be stable, but as of yet no solid acid combining high stability and high conductivity have been identified.

Conclusions:
Knowledge was gained and conclusions were drawn from each step in the progress of this project as detailed in Appendix A. The researcher summarized the project in these words
"The problem of sulfur (or selenium) reduction has proved vexing indeed. The development of optimized membrane electrode assembly structures awaits the discovery of alternative solid acids with greater chemical stability (materials that exclude sulfur and selenium)." This project determined that the use of proton conducting membranes that do not rely on hydrated polymers for proton transport in PEM fuel cells is not feasible using *current* solid acid materials.

Benefits to California:
In this project it was demonstrated that the path to a successful energy product that will benefit California electric ratepayers requires as its first step the development of alternative solid acid materials. It cannot be predicted at the outset whether such materials will be discovered.

Recommendations:
The basic thesis for this project was sound and the research was carried out in a professional and competent manner. Unfortunately the chemistry involved did not result in a usable anhydrous membrane material. If one is to realize the potential advantages of anhydrous, thermally stable proton conductors, “alternate solid acids with greater chemical stability" must first be discovered.

Project Status:
- 100% Completed.
- Completed on Schedule.
- Completed within Budget.
- Final Report Completed.
- Feasibility Analysis Report Completed.

EISG Projects Completed in 2002

Anaerobic Pump

EISG Grant Number: 99-38
PIER Area: Renewables
Principal Investigator: Keith Schimel (315) 425-7741
Organization: Technology Matrix Corporation
Grant Amount: $71,000
Status: Completed

Project Description:
Anaerobic digestion, as it is currently practiced, is limited in application because incomplete biochemical reactions severely limit the extent of the biological production of methane. This limitation is mainly due to the resistance to decomposition of many complex solid organic substances that constitute wet biomass.

In 1980, Dr. Keith A. Schimel invented a new continuous flow, continuous culture anaerobic process which was shown to nearly complete the digestion of wet biomass solids with an ordinary mixed culture of anaerobes. The design concept of this process is based on using the product biogas to plasticize the residual solids. In these early tests, development was focused on solids reduction and doubling the normal digestion speed of raw waste activated sludge. The data showed as much as 90% volatile solids (Organic materials) reduction and 80% chemical oxygen demand reduction could be achieved if the process is operating at optimum.

In the current project the focus was to validate the high solids reduction and improve the process's biogas (primarily methane) production. Methane produced by this process can be used to fuel electricity power plants in California. If deployed the technology could not only play an important role in the reduction of wet biomass solids, it could also provide a significant amount of fuel gas (methane) for power plants.

The project compared the methane production performance of this advanced hydrolysis and biogasification process with a conventional digestion process. Two prototype reactor systems were implemented. The advanced hydrolysis and biogasification process and a conventional, single-stage, "completely mixed by stirring" (CSTR) digester were operated side by side under identical conditions. Both systems were fed the same substrate, a 50:50 mixture of wastewater sludge at the same loading rates. This substrate is commonly used as a test substrate because it is widely available and is difficult to degrade. Both systems were held at the same low incubation temperature (20°C) so that accurate observations could be made.

Proposed Outcomes:
The goal of this project was to determine the feasibility of using the advanced hydrolysis and biogasification process for significant production of power plant fuel (biogas) by the reduction of wet biomass solids. The performance of the prototype reactor system implementing the advanced hydrolysis and biogasification process was compared with the performance of the CSTR reactor, the conventional technology used to reduce wet biomass solids. The following project objectives were established:

1. Peak specific gas production rate higher than the CSTR by a factor of 3.
2. Peak Methane production rate higher than the CSTR by a factor of 4.
3. Methane yield in liters per kg volatile solids twice that of the CSTR.
4. Total volatile solids reduction three times higher than the CSTR.
5. Total volatile Chemical Oxygen Demand Reduction three times better than the CSTR.

Actual Outcomes:
This prototype reactor system implementing the advanced process had the following measurable outcomes:

1. The specific gas production rate is 3.3 times higher than that for the CSTR.
2. The peak methane production rate is 3.9 times higher than that for the CSTR.
3. The methane yield in liters per kg volatile solids added is 1.88 higher than the CSTR.
4. The volatile solids reduction is 2.35 times more than for the CSTR.
5. The total Chemical Oxygen Demand Reduction is 3.35 better than for the CSTR.

Conclusions:
These results were developed by comparing the results of the tests of the two prototype units of identical volume, operated side by side at 20 degrees Centigrade. The Outcomes show that the prototype reactor system implementing the advanced process produces 1.88 times more methane per unit mass fed than the CSTR. All other figures of merit are also superior to those of the CSTR.

These results verify the feasibility of using the advanced hydrolysis and biogasification process for methane production thereby increasing wet biomass solids reduction. Overall, the advanced hydrolysis and biogasification process can convert organic solids to methane between two (2) and four (4) times faster (depending on loading) than a comparable CSTR unit. Most importantly, the total volatile solids reduction was 2.35 times more complete on the advanced hydrolysis and biogasification process than with CSTR. While this is less than the goal of three times improvement, it is nonetheless a significant improvement, because with the advanced hydrolysis and biogasification process nearly all the biomass feedstock is convertible to biogas (primarily methane), leaving little solid material for disposal.

It is important to note that while this experiment was performed at 20°C in order to slow the reaction for purposes of comparison between the advanced hydrolysis and biogasification process and CSTR, the optimal operating temperature for the mesophilic range is 35°C. The standard rule of thumb is that the reaction rates for these digesters would be about 2.5 times faster if operated at 35°C rather than at 20°C.

Benefits to California:
All large power plants being proposed for California rely on natural gas as the fuel. Most of that fuel is imported into the state. Biogas (predominately methane) can be produced from indigenous biomass material. The major sources of wet biomass waste produced in California are sewage sludge production, fiber production (pulp and paper), food processing, agriculture and animal wastes. These sources could generate over 45 million tons of wet biomass in California. If the advanced hydrolysis and biogasification process were to penetrate 100% of the Wastewater Treatment industry and 20% of the agriculture industry, that process would produce an estimated 1.54 billion therms of biogas (methane) gas per year for electrical generation or for process heat. Because of the existing capital investments in waste treatment, benefits would build over a period of 10 to 15 years. It is likely that investors would first build treatment facilities utilizing the advanced hydrolysis and biogasification process to handle concentrated sources of wet biomass waste. Once scrubbed of impurities, the biogas could be directly used in power plants.

In addition, the deployment of this process would reduce the environmental problems and expense associated with the disposal of large volumes of wet biomass solids.

Recommendations:
The testing completed on this project has assisted in identifying areas where additional development is needed. Areas for additional effort are:

- Demonstrate a commercial scale (sized 1 to 4 ton/day) agricultural prototype, and select a strategic partner to help with commercialization. Seriously evaluate the benefits of designing this prototype to be highway truck transportable.
- Evaluate methane production from new feed stocks to expand applications for the advanced hydrolysis and biogasification process.

Project Status:

- 100% Completed.
- Completed on Schedule.
- Completed within Budget.
- Final Report Completed.
- Feasibility Analysis Report Completed.

Control of On-Off Equipment in Buildings

EISG Grant Number: 99-03
PIER Area: Buildings End-Use Energy Efficiency
Principal Investigator: David Auslander (510) 642-4930
Organization: University of California, Berkeley
Grant Amount: $75,000
Status: Completed

Project Description:
Equipment used to control process variables such as temperature in buildings often operate by cycling on and off (or between stages if more than one "on" state) rather than as continuously modulating. Examples of such equipment include small to mid-sized packaged air-conditioning systems, furnaces, chillers operating at low loads, cooling tower fans, and some types of electrical heaters. On-off control units normally start and stop equipment when the process variable (e.g., space temperature) crosses a level. There are a number of disadvantages to using level-crossing logic. One disadvantage is that it is difficult to control the variation in the process variable with level-crossing logic, even if it is implemented digitally, because of the phase lag of the process. Another disadvantage is that level-crossing logic is not well suited for staged operation in which there exists more than one "on" state. A third disadvantage of level-crossing logic is that it makes the coordination of multiple units difficult.

This project developed and tested the feasibility of a new control strategy for the operation of "on-off" and staged equipment in buildings using computer simulation methods. Specifically, it developed the control logic so that it could be used to coordinate the operation of multiple units, and compared the performance of the new strategy with level-crossing logic. This technology was proposed as a means of reducing the energy consumption of HVAC equipment by reducing the frequency of start-stop operations. If the hourly start-stop cycling is reduced by two-thirds, the coefficient of performance of vapor compression equipment is raised an estimated 10%. The corresponding improvement for non-electric heating equipment efficiency is estimated at 6%.

This project applied pulse-width modulation (PWM) logic and a finite state machine to start and stop individual units. This control software was combined with a model of the heat transfer dynamics of a building and a transient model of HVAC equipment to study the performance of the new strategy and compare it to alternative strategies.

The metrics used to assess performance were energy consumption, peak demand, thermal comfort, and maintenance cost. The variability of the space temperature was used as a proxy for thermal comfort. Start-stop operations were used as a proxy for maintenance cost.

Proposed Outcomes:
The goal of this project was to determine the feasibility of reducing the energy consumption of HVAC equipment by reducing the frequency of start-stop operations. This was to be achieved by use of a newly developed control logic to coordinate the operation of multiple HVAC sub-systems. The following project objectives were established:

1. Develop new control software for operating energy-intensive, on-off, or staged equipment in buildings by adapting existing concepts for designing pulse-width modulation logic and finite state machines to this application.
2. Perform a computer simulation analysis of the performance of the control software to determine whether or not the new control strategy has energy, thermal comfort, or maintenance benefits relative to existing methods of operating this equipment.
3. Assess the change in energy efficiency as a result of the change in start-stop operations of vapor compression equipment with a target of 13% improvement, and non-electric heating equipment with a target of 6% improvement.
4. Maintain occupant thermal comfort levels.

Actual Outcomes:

1. The control software development yielded code that could be used to operate a wide variety of staged HVAC equipment in buildings.
2. The computer simulations determined that the proposed control logic had no beneficial impact on overall energy consumption, thermal comfort or maintenance costs.
3. The new control logic increased the frequency of start and stop operations by 27%.
5. The new control logic increased the size of the deviation from the space temperature set point by 11%.
6. An unanticipated outcome was the discovery that the new control logic combined with an optimized coordinator could load-level the power consumption of HVAC equipment, reducing excursions by 20% relative to level-crossing logic.

Conclusions:

1. Commercialization would involve control software development. The existing code would have to be adapted to a particular platform, but no hardware would be required as long as there was an existing control communication system in place so that a coordinator running on a networked computer could supervise a number of HVAC control units.
2. Using the proposed metric for equipment efficiency, the 27% increase in frequency of start-stop operations corresponds to an estimated seven percent (7%) decrease in coefficient of performance of vapor compression equipment and a greater than one percent (1%) decrease in non-electric heating equipment efficiency.
3. Equipment manufacturers are sensitive to the increased warranty risks due to increased on-off cycling.
4. Equipment installers may be reluctant to utilize this control logic because weaker temperature and humidity control may result in decreased comfort levels.
5. For commercial businesses with high power consumption the cost of power consumed during peak generation periods is high. Using the software control logic developed by this project to level the demand load during peak periods may save on energy costs associated with exceeding a billing rate threshold but any savings may be offset by increased energy consumption, higher maintenance and lower thermal comfort.

Benefits to California:

This project proposed the benefit of increased HVAC equipment efficiency derived from reduced on-off cycling. It discovered that PWM control strategy did not achieve this desired result. While the feature of load leveling by PWM control is an interesting development of this study, it is unclear to what extent California might benefit from this secondary result.

Recommendations:

Additional work is needed to investigate whether or not it is possible to provide energy benefits from the new strategy and to reduce the maintenance penalty. It is possible that by operating the PWM signals asynchronously and at different frequencies the maintenance penalty could be reduced. Asynchronous operation may also yield additional energy benefits. Asynchronous operation would increase the complexity of the design of the control logic, though not necessarily the complexity of its implementation.

Project Status:

- 100% Completed.
- Completed on Schedule.
- Completed within Budget.
- Final Report Completed.
- Feasibility Analysis Report Completed.

Development of a Unique Gas Generator for a Non-Polluting Power Plant

EISG Grant Number: 99-20
PIER Area: Environmentally Preferred Advanced Generation
Principal Investigator: Roger Anderson (916) 635-1606
Organization: Clean Energy Systems, Inc.
Grant Amount: $74,871
Status: Completed

Project Description:
Clean Energy Systems, Inc. (CES, Sacramento, CA) has defined and is in the process of developing a fossil-fueled, zero-emission power generation system. The key to this system is the combustion of a relatively clean fuel with oxygen in the presence of recycled water in a unique gas generator that directly produces a high-temperature, high-pressure gas composed almost entirely of steam and CO_2. Fuel for the system can come from a variety of fossil or biomass sources so long as it is composed almost entirely of the elements carbon (C), hydrogen (H), and oxygen (O). Oxygen is used to combust the fuel rather than air as in conventional systems thereby eliminating the formation of NO_x and large a volume of noncondensible exhaust gases. The high-energy gases produced by the gas generator drive multistage turbines that, in turn, drive an electrical generator. Exhaust gases from the turbine go to a condenser where gaseous CO_2 is separated from liquid water. Most of the water is recovered, reheated and returned to the gas generator. Gaseous CO_2 leaving the condenser passes to a recovery system where it is conditioned as necessary for use in enhanced oil or coal-bed methane recovery operations, for commercial sales, or for sequestration.

The gas generator is one of two key components in the system and is the focus of this program. CES successfully demonstrated the gas generator in this project. A high temperature steam turbine is the other key component requiring development. It was not the subject of this study. The CES generation system can operate with conventional steam turbines, albeit at reduced thermal efficiency.

Data from this project is being used in the design of a 10 MWe gas generator that will be used in system development testing under a cooperative agreement between CES and the U.S. Department of Energy's National Energy Technology Laboratory (NETL). Lawrence Livermore National Laboratory in Livermore California is the site being proposed for the demonstration of the CES cycle. If this site is chosen, the research will include CO_2 sequestration in abandoned oil wells.

Proposed Outcomes:
The goal of this project was to determine the feasibility of the CES gas generator element operating at commercial power generation conditions. While based on rocket engine technology, the gas generator for commercial power generation must operate on different fuels for longer periods of times. The following project objectives were established:

1. Develop, build and demonstrate a gas generator having a premixing injector element design. Operate the gas generator on pure oxygen and methane adding water for steam production. The methane and oxygen mixture is not used in rocket technology, nor is it used in conventional power generators.
2. Operate the gas generator stably and reliably for extended periods of time. Gas generators of this type typically do not run on methane fuel, nor do they run for extended periods of time.
3. Operate the gas generator at temperatures and pressures required for a power generator. Temperatures and pressures required for commercial power generation differ from those required for rocket propulsion.
4. Demonstrate reliable premixing of oxygen, water and methane. The test must provide a stable flame over long periods of time to achieve the zero emission goal.

5. Demonstrate time-temperature process control in cool-down modules to promote re-association of by-products, thereby creating a clean, two-species gas. To achieve the zero emission goal the gas generator must burn all of the methane fuel while not creating carbon monoxide.

Actual Outcomes:
Significant outcomes of the program and major test results are as follows:

1. A complete gas generator with a premixing injector element was designed, built and successfully operated on oxygen, methane, and de-ionized (D.I.) water. The tests were accomplished at the University of California, Davis campus. This test system is available for further research and demonstrations on other feeds.
2. The gas generator operated repeatedly, reliably, and stably. At the completion of the project it had experienced more than 75 starts with a total run time of more than 10 hours and one individual test duration of 48 minutes.
3. The gas generator operated at temperatures up to 2700°F (1480°C), pressures up to 300 psia (20 atm), and at several fuel-air ratios. These conditions allow the gas generator to generate steam for today's commercial steam turbines and for advanced high efficiency steam turbines.
4. The researchers demonstrated repeatable ignition and stable combustion of premixed oxygen, methane, and water.
5. The product gases from the gas generator are composed almost entirely of two gas species (steam and CO2) with only a minor amount of O2 and a trace of CO. No hydrocarbons or other volatile organic compounds were detected. The concentration of CO in the product gases was found to correlate well with predicted values.

Conclusions:
This project experimentally established the "proof-of-principle" for a novel gas generator component of a new system for producing clean electrical power from fossil fuels. The gas generator, based on rocket engine technology, produces high-energy drive gases that feed into steam turbines. Significant system integration tasks remain. Integration of such a gas generator into a power generation system could provide a viable, economical approach to zero-emission power production from a wide variety of fossil or biomass fuel. Such a system could make the total recovery of CO_2 possible at an affordable cost and in a form suitable for enhanced recovery of oil or coal bed methane or for sequestration. This project demonstrates a technically feasible method for eliminating from power plants both atmospheric pollution and CO_2 which has been implicated in the global warming concern.

Benefits to California:
The project represents the early development of a zero-emission, fossil-fueled power plant using rocket engine derived combustion technology. When commercially viable these power plants will offer a zero emission alternative to fuel cells for clean power generation. If the produced carbon dioxide is used in enhanced oil recovery, California could gain additional proven oil reserves and the associated economic benefits.

Recommendations:
The Program Administrator recommends that California government and environmental agencies support CES in the development of this technology. The next steps are the development of small-scale demonstrators, larger demonstrators, and establishment of a facility for zero emission research. Lawrence Livermore National Laboratory, (LLNL) is currently attempting to secure funding for such a research facility at Livermore, California. That project would demonstrate both the overall zero emission power plant concept and enhanced oil recovery using the CO_2 produced. CO_2 would be sequestered in the process. High temperature steam turbines represent the other technology advancement needed to commercialize the CES power system for widespread, economically attractive power production. At this time there are no high temperature steam turbines commercially available. The technology to build high temperature steam turbines exists in the rocket engine industry. Significant research and development must be accomplished to take that technology and reduce it to commercial products with long life. Research organizations should also fund bench-scale demonstrations using alternative fuels to verify that this technology can be applied to commercial grades of oxygen with virtually any fossil or biomass fuel.

Project Status

- 100% Completed.
- Completed on Schedule.
- Completed within Budget.
- Final Report Completed.
- Feasibility Analysis Report Completed.

High Efficiency Single Phase Air Conditioner

EISG Grant Number: 99-39
PIER Area: Buildings End-Use Energy Efficiency
Principal Investigator: Otto Smith (510) 525-9126
Organization: Smith & Sun
Grant Amount: $75,000
Status: Completed

Project Description:
Electric power system overloads often occur during hot summer afternoons when many residential air conditioners are operating. The majority of these air conditioners are powered by single-phase electric motors. Out of concern for power reliability on these hot afternoons, power companies bring on-line their least desirable power supplies. These are the most expensive to operate, the most polluting or oldest generators. These actions are taken to minimize the probability of system degradation or a blackout. The cost to the power company and to society to supply these air conditioners at the peak load time is high, and is often higher than the rate that the customer is currently paying. Also, emissions from the older power plants are usually higher than the newer power plants. The less desirable power plants would be dispatched less frequently if higher efficiency air conditioners were widely deployed in the marketplace at reasonable prices.

One solution is to power the air conditioners with the more efficient three phase motors. The constraint is that most residences and perhaps 40% of all rural areas have only single-phase power available, and it is uneconomic to change these distribution and wiring systems. The compressors are well designed, but the low efficiency single-phase motors on the compressor shafts are much less efficient than three phase motors of the same power rating.

This project demonstrated the feasibility of using a control system that can operate high efficiency three-phase induction motors from single-phase power supplies. These control systems were originally developed for water pumping applications by the researcher in previous, unrelated efforts. These controls are trademarked under the name Enabler™.

The use of such controls on three phase air conditioner motors could reduce the electrical power demanded by residential and small commercial air conditioners by 8 to 10 percent. Air conditioner manufacturers would design all products with three phase motors, adding the control system to those sold to market segments where three phase power is not available.

Proposed Outcomes:
The goal of this project was to determine the feasibility of operating air conditioners with three phase motors efficiently on single-phase power. A test program to measure efficiency was very carefully designed and implemented in order to provide high confidence in the test results. The following project objectives were established:

1. Design, construct and demonstrate a control system specifically for three-phase air conditioner motors enabling them to run using single-phase power.
2. Demonstrate that residential size central air conditioning units, running on three-phase motors that have been modified with a control system to operate on single-phase power, will consume 10% less electrical energy than equivalent air conditioning units running on single-phase motors.

Actual Outcomes:

1. Control systems were designed and constructed to operate two different three-phase motors from single-phase power. One motor was designated a Model 48T motor, the other, a Model 42T motor. The control systems were capable of operating the three-phase motors. As expected, motor performance was improved. With the control installed on the Model 48T motor, the winding current unbalance was reduced to only one percent, compared to 7.4% with the three-phase power supply. Also, the single-phase input to the control had a power factor of 90.8% LEADING, compared to 75.2% lagging with the three-phase power. With the control installed on the Model 42T motor, the winding current unbalance was reduced to 3.2%, compared to an unexpectedly large 13.8% with the three-phase power supply. Still, the single-phase input to the control had a power factor of 88.3% LEADING, compared to 77% lagging with the three-phase power.
2. All of the objectives were achieved for the two sizes of compressors that were tested. A 48,000 BTU/hour compressor and a 42,000 BTU/hour compressor were tested at an independent commercial testing facility by the professional staff as directed by Dr. Smith. Many tests were conducted. The average Energy Efficiency Ratio (EER) for each configuration is tabulated below, the efficiency improvement is presented in the last row:

Motor Configuration	**42,000 BTU/hour Unit**	**48,000 BTU/hour Unit**
Three-Phase powered three-phase motor	10.816 BTU/Watt-hour	12.436 BTU/Watt-hour
Single Phase motor	10.864 BTU/Watt-hour	10.691 BTU/Watt-hour
Enabler™ controlled single phase powered 3-phase motor	11.294 BTU/Watt-hour	11.950 BTU/Watt-hour
Improvement in Single Phase Powered Energy Efficiency	**3.958 %**	**11.776%**

Conclusions:

The feasibility of operating three-phase motors in air conditioners using single-phase power was demonstrated. The motor performance improvement was consistent with that observed in prior development of the controls on larger motors. Without test results from additional like units, it can not be assumed that the savings of nearly 12 % of the electricity use for the 48,000 BTU/HOUR unit with the control system will be realized on all air conditioners of this size. The 42,000 BTU/HOUR unit demonstrated nearly a 4% energy savings. The test results show that the 42T three-phase motor was significantly below average in efficiency. It was less efficient than the single phase motor. The principal investigator concluded that this resulted from low quality in the area of winding current imbalance and suggested that a motor of average quality of this size would have produced greater efficiency gains. Due to the small sample size and variability in motor quality the Program Administrator estimates the energy savings from this invention to be in the 8% to 10% range on average, but additional testing will be needed to confirm this conclusion. The impact of the tested technology on unit efficiency was significantly effected by motor quality. That quality remains an unquantified variable. If the two three-phase motors selected in this study are representative of the range in quality of commercially available three-phase motors this would suggest that the motor manufacturing industry has a quality control problem that also needs addressing.

The ultimate commercial success of the Enabler™ technology will depend on the impact this technology will have on the retail cost of new air conditioners. The researcher reported that his direct cost for the control system components (purchased at retail) was $128 per unit. The researcher projected that the equipment manufacturers could reduce the direct cost of the control system circuitry to $64 per unit if mass-produced. Based on the $64 cost estimate, the Project Administrator projects an increase of about $100 in retail price per unit of the large 48T class of air conditioner. The control circuit for the smaller units, utilizing smaller capacitors, would have a lesser retail price impact. To put this into perspective, the Program Administrator prepared a simple payback analysis. Two electric rates, $0.10 and $0.25 per KWH, were used to span a broad range of retail prices. The 48T motor tested uses electricity at the rate of

4 KW. By using the new control circuit, one could reduce demand by 10% or 400 Watts. It follows that the modified air conditioner would save 400 KWH in 1000 hours and 1000 KWH after 2500 hours of operation. A person with an electric rate of $0.10/KWH will have a simple payback in 2500 hours of operation, while a person with a $0.25/KWH rate will achieve a simple payback in 1000 hours of operation. Depending on the length of the cooling season, payback could occur in one to two cooling seasons. This supports the conclusion that this innovation offers a near term payback to the ratepayer using this control technology with three phase motors.

The researcher asserts that the direct cost of the control system circuitry could be further reduced if the manufacturers of the three-phase motors made some minor design modifications to the motor wiring. While additional research is required to bring this technology to market, air conditioner manufacturers would be able to adopt this new technology without modifying their existing manufacturing tooling.

Benefits to California:
The primary benefit to California will be the availability of higher efficiency (8-10%) air conditioners to electric consumers that are limited to single-phase power. A second major benefit is the reduction in peak loading of the electrical system on hot summer days. Many advantages accrue to the ratepayers from the reduction in peak loads. The relatively near term availability of these benefits is due to the simple, modular nature of the control circuitry, which can be a simple add-on at first, with integration in depth developed as cost cutting measures by the manufacturers.

Recommendations:
The results of this project indicate that significant energy demand reductions can be accomplished in the relatively near term if the tested technology is deployed in California. Because of the limited funds in the grant, the researcher only tested the control system on two air conditioning compressor units. To further this technology, additional testing is needed to assess the energy savings on a full range of commercially available air conditioning units. Research is also needed to fully define the distribution of motor quality to enable a more accurate projection of average efficiency improvement. In addition, the researcher should select a major manufacturer of air-conditioners as a partner in any additional research to insure that the technology development meets all market needs.

Project Status:

- 100% Completed.
- Completed on Schedule.
- Completed within Budget.
- Final Report Completed.
- Feasibility Analysis Report Completed.

Renewable Hydrogen Fuel Production by Microalgal Photosynthesis

EISG Grant Number: 99-06
PIER Area: Renewables
Principal Investigator: Anastasios Melis (510) 642-8166
Organization: University of California, Berkeley
Grant Amount: $75,000
Status: Completed

Project Description:
The ability of unicellular green algae to produce hydrogen (H_2) gas in the presence of sunlight has been recognized by the scientific community as being a possible way to generate hydrogen gas for energy production. Below is a list of important known factors specific to green algal H_2 production.

1. Photosynthesis can operate with a photon conversion efficiency of >80%.
2. Microalgae can produce H_2 photosynthetically with a photon conversion efficiency of >80%.
3. Molecular Oxygen (O_2) acts as a switch by which H_2 production is turned off.
4. Sixty years of research has failed to overcome the incompatibility of simultaneous O_2 and H_2 production by photosynthesis.

Recent work has shown that the absence of Sulfur (S) from the growth medium of the green algae Chlamydomonas reinhardtii (*C reinhardtii*) causes a specific but reversible decline in the rate of oxygenic photosynthesis but does not affect the rate of mitochondrial respiration. The absence of sulfur from the growth medium triggers a metabolic switch, one that selectively and reversibly turns-off photosynthetic O_2 production. In the presence of S, green algae photosynthesize normally (H_2O oxidation, O_2 evolution and biomass accumulation), however, in the absence of S and absence of O_2, photosynthesis in *C. reinhardtii* produces H_2 rather than O_2. Further refinement of this method may lead to full understanding of the green algae hydrogenrelated metabolism and ultimately the generation of H_2 gas for the fuel and chemical industries.

Proposed Outcomes:
The goal of this project was to determine the feasibility doubling the hydrogen production efficiency of *C. reinhardtii* from the level of ~10% of the theoretical maximum to the level of ~20% of the theoretical maximum. The following project objectives were established:

1. Improve the H_2 production by shifting forward the equilibrium of the reversible hydrogenase catalyzed reaction.
2. Design and test cell growth media that accentuate the metabolism of H_2 production.
3. Test the effect of diurnal cycles on starch mobilization and H_2 production.
4. Identify the rate-limiting step in the H_2 production process.

Actual Outcomes:

1. Two approaches were investigated attempting to shift forward the equilibrium of the reversible hydrogenase catalyzed reaction:
   a. The atmospheric air within the photobioreactor was purged with argon to remove dissolved O_2 prior to initiation of H_2 production. Independent measurements have shown that such degassing is sufficient to reduce the O_2 content of the culture to less than 2% of saturation. This purge resulted in almost immediate initiation of H_2 production, while H_2 production by the control culture was delayed for another 10 to 15 hours, hence this approach shifted the reaction forward, reducing the wait time by roughly 10-15% of the hydrogen production cycle length.
   b. The pH balance of the water in the gas collection device was modified with the thesis that the water was saturated with H_2 gas and perhaps contained a significant amount. No detectable increase in the collected amount of H_2 gas was observed.

2. Multiple designs of cell growth media were tested to accentuate the metabolism of H_2 production.
   a. Determined the effects of salinity:
      i. On chlorophyll content and cell viability. Cell density increased then remained constant with moderate levels of salinity.
      ii. On cellular photosynthesis and respiration. Neither photosynthesis nor respiration appeared to be effected by reasonable amounts of salinity.
      iii. On H_2 production. A moderate level of salinity, 10 mM NaCl enhanced the rate and yield of H_2 gas by 30% and 40% respectively over the control.
   b. Determined the effects of ATP biosynthesis uncouplers as follows:
      i. Methylamine-hydrochloride. Over a very narrow range centered on 5 mM Methylamine, H_2 production increased as much as 20-25% over the control.
      ii. Gramicidin. This chemical was not sufficiently soluble to allow investigation of concentrations greater than about 5 micromoles. However, at that level the effect was similar to that of Methylamine, above.
      iii. FCCP. This chemical significantly reduced the production of H_2.
   c. Determined the effect of trace amounts of S; Used 10, 50 and 100 micromoles S samples. The addition of S was observed to delay the onset of H_2 production. However the total production increased with increase of S until the delay of onset became the dominant factor. Culture with 50 micromoles S added produced about 35% greater H_2 yield than produced by the cultures with no S added.
3. The *C reinhardtii* were cyclically deprived of S and supplied with S, for three complete cycles, and the rate of production of H_2 was recorded. The result was that the single culture of *C reinhardtii* produced about three times as much H_2 in three cycles as the control cultures did in a single cycle. This illustrated the capacity of the *C. reinhardtii* to recover from the catabolic effects of H_2 production when S is provided between H_2 production cycles.
4. The rate limiting step in the H_2 production process was identified by Western Blot analysis of the total cell protein extracts from *C reinhardtii*. This showed that the hydrogenase gene is expressed sparingly under S deprivation conditions.
5. In all cases the gas produced by the *C reinhardtii* algae was collected in a tube (upside down burette) filled with water. The gas collected in this manner was reported as hydrogen. Gas chromatographic analysis of the gas collected showed ~90% H_2, ~10% nitrogen with traces of CO_2 and O_2.

Conclusions:

This research indicates that H_2 production rates approaching 20% of theoretical maximum could be achieved by proper combination of the techniques explored in this project.

1. The equilibrium of the reversible hydrogenase catalyzed reaction can be shifted forward.
   a. There is significant benefit, 8 - 12% production improvement to be gained by rapid transition from aerobic to anaerobic environment in the photobioreactor medium, compared to a "natural" transition.
   b. The question of H_2 solubility in water was not definitively answered.
2. H_2 production can be increased by improving the design of the cell growth media.
   a. Moderate levels of salinity of the culture do not adversely affect cell viability and do increase H_2 production by ~40%. However, there may still be room for improvement with further study.
   b. Due to the modest effect and the high cost of ATP biosynthesis inhibitors, their use is not the method of choice for manipulation of H_2 production.
   c. Sulfur titration holds the promise of improving the yield of H_2 production by as much as 35% in this two-stage photosynthesis and H_2 production method. Its utility in a production environment is a concern.
3. It may be possible to extend the production of H_2 by a single culture ad infinitum by alternately supplementing and depriving the culture of its organic sulfur. Three cycles were demonstrated.

4. The sparse expression of the hydrogenase gene within the *C reinhardtii* is responsible for the limited H_2 production. Genetic engineering should be applied to increase the expression of this gene.
5. The technique for removal of nitrogen from the product gas must be identified.
6. It is evident that incremental improvements in the yield of hydrogen production can be accrued upon R&D of the method. However, further improvements need to be achieved to make "hydrogen production by sulfur-deprivation of green algae" a commercial reality.

Benefits to California:
Both small-scale (industrial and commercial) and larger (utility) solar energy conversion plants (photobioreactors) can be envisioned utilizing the Two-Stage Photosynthesis and H_2-Production process. Remote photobioreactors could be installed as modules in arid areas where sunlight is plentiful and alternative uses of land are minimal. Such a process of H_2 gas production would be sustainable, environmentally friendly and economically attractive compared to most other hydrogen production alternatives.

In addition to H_2, a valuable and clean fuel, the Two-Stage Photosynthesis and H_2 -Production process will generate green algal biomass as a significant "Value-Added Bioproduct" that will enhance the economics and competitiveness of the process.

Recommendations:
Further Research and development should address the specific biological and engineering challenges facing commercialization of this technology.

- Further basic research should be done to improve understanding of the cellular metabolism and basic biochemistry that support this process.
- This project demonstrated that hydrogen production of 20% of theoretical is achievable, however, further research should be done to improve the hydrogen production further.
- Preliminary designs for the scale-up of the process should be created, and a preliminary life cycle cost analysis performed. This analysis should compare the cost of producing electricity by this method to the cost of PV. Further, this analysis should compare the cost of producing hydrogen by this method compared to the electrolysis method.

The technology developed in this project will take 8 to 12 years to advance to the state of market readiness.

Project Status:

- 100% Completed.
- Completed on Schedule.
- Completed within Budget.
- Final Report Completed.
- Feasibility Analysis Report Completed.

Ventilation Measurement and Control

EISG Grant Number: 99-02
PIER Area: Buildings End-Use Energy Efficiency
Principal Investigator: Clifford Federspiel (510) 418-3392
Organization: Federspiel Controls
Grant Amount: $74,970
Status: Completed

Project Description:
Cost-effective and accurately-measured airflow rates, especially at outdoor air intake locations, are a recognized difficulty with ventilation controls. Typically, outdoor air intakes have no ductwork either upstream or downstream. The most common configuration is a set of dampers mounted in a large opening of a mixing plenum. This configuration can cause large non-uniformities in the velocity distribution. Existing airflow measurement technology is not effective with non-uniform airflow. Since outdoor airflow rates cannot be measured accurately or cost-effectively, ventilation systems are routinely operated without knowing ventilation rates, and other key airflow variables. The result is wasted energy or compromised air quality, or in some cases both.

The purpose of this project was to develop an energy-efficient, cost-effective, accurate, and maintenance-free flow measurement and control technique for ventilation systems. This program has a specific technical goal: airflow measurement accuracy of ±10% of actual or ±5% of full scale, whichever is greater. This criterion is derived from an addendum to ASHRAE Standard 62.1. Broader goals included a controller design that requires less maintenance than current technology at lower first cost.

The researchers proposed to use torque characteristics of control dampers to measure flow. They theorized that if the position and aerodynamic torque were measured, then it should be possible to deduce the flow rate. The hypothesis is that torque-based flow measurement (TBFM) should be accurate at low velocities if the damper is constructed to induce aerodynamic torque when throttling. The TBFM should also be insensitive to non-uniform flow because the entire surface of the damper blades is used as the sensing means.

Proposed Outcomes:
The goal of this project was to determine the feasibility of the TBFM technique as a cost effective ventilation airflow measurement device with an accuracy of ±10% of actual flow or ±5% of full scale, whichever is greater. The following project objectives were established.

1. Develop a correlation function (mathematical model) that accurately describes the relationship between the position, aerodynamic torque, and air velocity of control dampers.
2. Perform a computer-based sensitivity analysis using the correlation function. Determine whether or not the goal of ±10% of actual flow or ±5% of full scale can be achieved given typical torque and position measurement errors.
3. Design and construct a prototype flow measurement device and test stand based on the results of the modeling and sensitivity analysis.
4. Demonstrate an accuracy in airflow measurement of ±10% of actual flow or ±5% of full scale, whichever is greater.
5. Achieve a cost effective design that requires less maintenance than current technology.
6. Assess the accuracy of TBFM in the presence of flow disturbances.

Actual Outcomes:

1. Existing theories on the torque characteristics of butterfly valves were combined with published experimental results to formulate a model that predicts the torque characteristics of multi-blade control dampers. The development of the correlation function demonstrated that the relationship between position, torque, and airflow has a simplified form that makes calibration of the

correlation function relatively simple. The correlation function predicts that the velocity is the product of a function of the position and a function of the torque.

2. The sensitivity analysis predicted that the technical goal could not be achieved when the damper was nearly open, but it should be easily achievable for the most important operating conditions. The most important operating condition is when the damper is about 10% - 20% open because that is the range of conditions for controlling minimum ventilation. Under that condition, the sensitivity analysis predicted that the technical goal could be achieved, and that the torque-based flow measurement should significantly outperform a pitot tube or similar flow measurement technology.
3. A test stand was constructed that used five high-accuracy pitot tubes in a constricted duct as a measurement standard. A prototype flow measurement device with an offset-blade design was constructed. The offset-blade design uses standoffs to make the damper blades rotate about an axis that is displaced by two inches. This design induces torque even when the damper is fully open.
4. The laboratory-scale tests confirmed the results of the sensitivity analysis. The tests showed that when nearly open, the torque was very low even with the offset-blade damper.
5. To provide a more cost effective device, the flow measurement device was designed without pitot tubes. This eliminated the recurring maintenance task of verifying that the air passages are clear of dust.
6. Tests were conducted to assess the ability of the TBFM technology to operate accurately in the presence of a flow disturbance. To simulate a disturbance, a commercially available louver was mounted to the frame of the TBFM prototype and to the frame of the commercially available flow station. These tests illustrated that the TBFM technology is insensitive to the flow disturbance when the damper is less than 70% open. When the TBFM damper is more than 70% open, the flow disturbance has a significant negative impact on the accuracy.

Conclusions:

1. The TBFM technology can outperform conventional flow measurement technology under a wide range of operating conditions. The TBFM technology is more accurate than a pitot tube when the damper is less than 80% open. This project found that the TBFM technology is insensitive to the presence of a significant upstream flow disturbance when the damper is less than 70% open. The accuracy of a commercially available airflow station was strongly affected by the presence of the same upstream disturbance.
2. The fact that the TBFM technology cannot provide accurate measurement of velocity when the damper is nearly open is a problem for a small percentage of applications.
3. One significant obstacle to commercialization of the TBFM technology is that it cannot be used in the retrofit market because of the expense of retrofitting dampers. Some dampers are embedded in HVAC units, and can only be replaced by dismantling the HVAC equipment. The researcher contacted a manager from a leading energy service company (ESCO) to get an opinion on the commercial viability of the TBFM. The manager told the researcher that his company would have no interest in the TBFM technology because of the cost of retrofitting dampers.

4. A significant obstacle to commercialization of the TBFM technology in the new construction market is that it requires substantial change in the way damper devices are designed and manufactured. In order to get the full benefit, the damper design would have to be changed to an offset-blade design with low-friction bearings, which would involve some re-tooling for an equipment manufacturer.

Benefits to California:
If the TBFM technology were widely used, California would benefit from reduced energy consumption, reduced peak demand, and improved productivity and health. Energy consumption and peak demand would be reduced because the technology would prevent over-ventilation and enable demand-controlled ventilation. Fisk and Rosenfeld (1997) estimate that improvements in indoor air quality could save $12 - 43 billion nationally in lost productivity due to health problems in buildings. The developed technology, if implemented could recover some of that lost productivity by providing better ventilation at a lower energy cost. This would be one step toward improved indoor air quality.

Recommendations:
Follow-on development should focus on the design and cost of the damper system so that this technology could be applied to the new construction market. In addition future work should attempt to improve the measurement accuracy when the dampers are nearly open.

The developers of this technology should work closely with potential manufacturers. Before pursuing follow-on technical effort, the developers should achieve positive indications of interest and support for this technology from members of the HVAC industry. Minimum levels of support would include the provision of acceptable end item cost targets and desired technical specifications.

The awardee has presented a number of technical approaches to resolve the implementation difficulties. These could be pursued once the interest of the industry and the market requirement specifications are established.

Project Status:
- 100% Completed.
- Completed on Schedule.
- Completed within Budget.
- Final Report Completed.
- Feasibility Analysis Report Completed.

EISG Projects Completed in 2001

Electrosynthesis of Device Quality Semiconductor Films

EISG Grant Number: 99-01
PIER Area: Renewables
Principal Investigator: Shalini Menezes (805) 497-2677
Organization: InterPhases Research
Grant amount: $75,000
Status: Active

Project Description:
This project devised a Copper Indium Diselenide (CIS) deposition method that is simpler, less expensive, and more effective than the prevailing methods. The *Electrochemical Molecular Layer Epitaxy* (EMLE) method was developed in order to simplify the synthesis of electronic grade CIS films and reduce fabrication costs for large photovoltaic (PV) modules. The project targeted the energy problem of reducing the capital equipment cost for photovoltaic (PV) modules production in order to make the cost of PV power systems competitive for California ratepayers. It developed this new non-vacuum approach to fabricate high quality thin-film materials for PV modules that could lower the manufacturing costs by over 50% and increase the PV module efficiencies.

The project addressed the PIER subject area of Renewable Energy Technologies. Within that field, this project addresses the cost of manufacturing solar photovoltaic (PV) systems. Worldwide PV markets have been expanding, with sales projected to exceed $12 billion by 2010. PV could provide a large portion of the state's electricity needs without negative impact to the environment, but this potential is limited due to the high initial cost of PV systems. In order to mitigate costs, subsidized buy-down programs have been introduced so that PV power can compete in the current energy market.

This EISG project explored a means to manufacture PV devices at lower cost. It created a nonvacuum fabrication method, specifically targeting the commercially important Copper Indium Diselenide (CIS) PV cell. CIS technology is important because when fabricated with complex, expensive laboratory scale vacuum methods, CIS cells are more reliable and efficient relative to other thin film PV types. Unfortunately, currently existing low-cost non-vacuum methods, suitable for large-area cell manufacturing result in low-grade films, which require further costintensive vapor phase treatments. The *Electrochemical Molecular Layer Epitaxy* method integrates the low-cost, large area features of electrodeposition with the atomic level, or nanoscale control of vapor phase epitaxial methods to produce high quality CIS films at ambient conditions from aqueous solutions. The project impacts both the positively doped CIS (*p*-CIS) state of the art solar cell, as well as the new flexible, lower cost negatively doped CIS (*n*-CIS) solar cell being developed.

Proposed Outcomes:
1. Design, assemble and test new apparatus and control software for nanoscale-controlled electrodeposition that eliminates need for vacuum processing.
2. Identify critical deposition parameters.
3. Synthesize binary precursor films.
4. Analyze the thin-films with electrochemical and surface analytical characterization.
5. Extend the investigation to produce ternary CIS absorber layer.
6. Begin a process of commercial readiness.

Actual Outcomes:

1. A new non-vacuum electrodeposition apparatus, including process control software, was successfully designed, assembled and tested. The introduction of an unconventional thin layer flow cell was the key element that facilitated a precise electrodeposition process.
2. The effects of the standard EMLE deposition parameters of temperature, electrolyte composition, deposition potential, and timing parameters were identified, along with the effect of electrolyte volume.
3. The CuSe superlattice films (binary precursor films) were grown using three different methods, which enabled the identification of the process parameters.
4. A series of samples comprising 500-800 layers deposited on Mo/glass were analyzed and their composition determined. Film composition was tabulated as a function of the process parameter values.
5. This project led to a new method to produce a commercially valuable ternary CIS film, CuInSe2. The results offer valuable insights into the role of process parameters allowing the identification of a new means to incorporate less noble metals in CIS film as required for high efficiency PV cells.
7. A US Patent was granted on May 8, 2001, based on the concepts underlying the new method.

Conclusions:

While a fully functioning production line is still five years away, this project advanced the science toward using non-vacuum, electro-deposition for the production of thin film CIS PV cells.

1. The new electrodeposition apparatus and methodology represents an important advancement in electro-deposition process technology. It could allow the substitution of inexpensive electro-deposition hardware for the expensive vacuum deposition processing hardware currently needed to produce CIS thin film PV. Major gains were made in fine control of the electro-deposition process.
2. The new electrodeposition methodology, applied to the task of producing CIS thin film PV, has the potential to eliminate vacuum processing, reduce processing temperature, eliminate the need for multiple electrolytes, and eliminate the need for post annealing step. These potential advantages must be demonstrated in a subsequent development phase.
3. The original objective of this project was to produce a binary precursor film of CuSe using the new EMLE process, however, early success in producing the binary film allowed for the project to be extended to include the successful fabrication of a ternary Cu-In-Se material that constitutes the solar cell absorber layer.
4. Characterization of the fabricated binary and ternary samples confirmed the feasibility of the deposition process to produce high quality layers. This result should support the fabrication of CIS PV films with conversion efficiencies comparable to films produced using the existing expensive process.
5. The results of this research support the conclusion that through the commercialization of the new electrodeposition apparatus and methodology that the fabrication cost of electronic grade CIS films could be reduced by at least 50% for large PV modules.

This EISG project has been timely and instrumental in launching an alternate thin film deposition technology with the potential for lower manufacturing cost. The research team learned how to provide fine control of the electro-deposition process. The EMLE method compares well against other low-cost methods for CIS deposition that are being developed for the current *p*-CIS solar cell, as well as for a new flexible, lower cost *n*-CIS solar-cell. Nearly all other methods need an expensive, hazardous high-temperature selenization second step to produce device quality CIS films. The results are particularly important for the production of low-cost, high-volume flexible solar cells, based on *n*-CIS technology.

Further, the results of this project include a new process representing entry into the field of nanotechnology. This approach of electrodeposition controlled at the atomic level presents a relatively simple, rapid and inexpensive process to create a broad spectrum of complex

semiconductor superlattices, heterostructures and quantum well devices. The new findings and their anticipated contribution to photovoltaics and nanotechnology are very important.

Benefits to California:
The project performed R&D on technology that holds many potential benefits to California electricity ratepayers and the state economy. The project technology has the potential to:

1. Provide California ratepayers with a viable cost-effective PV technology.
2. Realize an affordable, reliable, state-of-the-art, clean and safe renewable energy resource for California residents.
3. Provide a timely cost-effective renewable energy option for distributed generation to California utilities and ensure energy diversity, quality and reliability in the electricity markets.
4. Lead to new in-state jobs and higher tax revenues, thus boosting California's vitality and the overall economy.
5. Provide a new developmental entry into the high potential nanotechnology field.

Recommendations:
The success of the feasibility study warrants further development of the new deposition method to fabricate a complete solar cell. The next stage will advance the project to:

1. Extend the functionality of the design, build and test a prototype deposition apparatus and control system suitable for use in fabrication of a complete *n*-CIS solar cell.
2. Advance the EMLE process to optimize the methodology for depositing all components of n-CIS PV cells.
3. Automate the equipment and process and produce a quantity of *n*-CIS PV cells for operational evaluation and analysis.
4. Because there currently exists a complete infrastructure supporting the manufacture and distribution of the positively doped CIS (*p*-CIS) PV cell, it is also recommended that this project advance the process to synthesize the components of *p*-CIS PV cells.
5. Develop a preliminary production readiness plan to produce commercially viable PV module manufacturing equipment.

The EISG project results provide the bases and the directions for future R&D to fabricate a complete PV device. The method will evolve into an inexpensive, integrated system for large scale manufacturing of efficient PV modules. The scale-up will take advantage of the existing automation and process lines designed for the electroplating industry. The final process will be user-friendly, robust and readily amenable to scale-up for mass production of PV modules.

Project Status:

- 100 % Completed.
- Completed on Schedule.
- Completed within Budget.
- Final Report Completed.
- Feasibility Analysis Report Completed.

Improved Operational Turndown of an Ultra-Low Emission Gas Turbine Combustor

EISG Grant Number: 99-13
PIER Area: Environmentally Preferred Advanced Generation
Principal Investigator: Scott Smith (408) 727-8282
Organization: Alzeta Corporation
Grant Amount: $74,103
Status: Completed

Project Description:
Alzeta Corporation is a manufacturer of industrial burners and combustion systems. Alzeta is developing an advanced low-emissions combustor for use in industrial gas turbines and microturbines. Alzeta's goal is to develop a low emissions combustor that is effective, relatively low cost and can be designed to fit into most existing gas turbine engines. The final report (see Appendix A) details design and testing of Alzeta's Gas Turbine Surface Burner (GTSB). Testing was accomplished at atmospheric conditions and in Honeywell's 75 kilowatt combustor test rig.

In California's changing electricity market, small gas turbine generators may be playing an increasingly important role. These units hold the promise of bringing cheaper, more reliable electricity to California's ratepayers. To reduce harmful air emissions, these units must be equipped with combustors that reduce the oxides of nitrogen to less than 5 ppm. Alzeta's GTSB is being developed to address emissions reduction to these levels without significantly increasing capital equipment costs.

The low-emissions performance of the GTSB derives from its ability to stabilize combustion at low adiabatic flame temperatures where side reactions responsible for NOX formation are thermodynamically less favorable than complete combustion of hydrocarbon fuel. To reduce the adiabatic flame temperature, more air than necessary for complete combustion is premixed with gaseous fuel and directed through the combustor. In the gas turbine industry, this approach is called lean-premixed, dry low-NOX (DLN) combustion. The GTSB differs from existing DLN systems. Its stabilization mechanism removes heat from the combustion reactions by radiant heat transfer resulting in lower NOX formation than attainable by well-stirred premixed combustion with the same amount of excess air.

A potential barrier to commercialization of the GTSB, as with other DLN systems, is the problem of operational turndown. It is difficult for DLN systems to sustain combustion when the power level is reduced from full power to levels as low as 50% power. Increasing the operational turndown of the GTSB requires precise local control of the air-fuel ratio over selected regions of the burner surface. This level of control can be accomplished by partitioning the GTSB into independent segments. Under low fuel-flow conditions, the air-fuel ratio can be maintained in an individual segment while fuel-free air passes through adjoining ones. The number and size of the segments can be adjusted to provide stable combustion over the load range. At full load, the entire GTSB is fired with fuel divided among its segments such that each is operated at the same air-fuel ratio.

Proposed Outcomes:
The goal of this project was to determine the feasibility of a segmented GTSB. Alzeta's strategy is to develop a low emissions gas turbine combustor that is effective, relatively low cost, adaptable to existing engines, and has the flexibility to operate over a broad engine turndown ratio. This project's focus is on increasing the operational turndown ratio of the GTSB while maintaining low emissions over the load range. Alzeta partitioned the burner into segments to achieve this result. They planned to add a fuel-air mixture to the segments in a sequential manner as engine load increased. To be successful, the segmented GTSB had to meet emissions targets of sub-5 ppm NOX (referenced to 15% O2), sub-10 ppm CO and sub-10 ppm unburned hydrocarbons over the operating range of a micro-turbine engine. The following project objectives were established:

1. Provide three conceptual designs of segmented GTSB. The designs should be differentiated by geometry and number of segments. Create criteria to identify and select the most promising

design. Produce design drawings for a GTSB that will fit into the Honeywell 75 kWe combustor test rig.

2. Build and instrument the test combustor. This design objective is important because a segmented GTSB is a new concept and has not been previously designed for testing at gas turbine conditions.
3. Test the segmented GTSB at atmospheric conditions. Measure combustor emissions at six engine-operating conditions from idle to full power. Vary the fuel flow split to the segments at each operating condition to optimize emissions. Measure and record NOX and CO emissions at each operating condition and each segmented fuel flow condition. The objective is to prove the capability of the segmented GTSB to achieve NOX emissions less than 5 ppm at atmospheric pressure over simulated engine operating conditions. This atmospheric pressure test, while less rigorous than Objective 4, provides relatively low cost data to the designers early in the development cycle so that adjustments can be quickly and easily made.
4. Test the segmented GTSB at pressures typical of the Honeywell 75 kilowatt Parallon engine. Measure combustor emissions at six engine-operating conditions from idle to full power. Vary the fuel flow split to the segments at each operating condition to optimize emissions. Measure and record NOX and CO emissions at each engine condition and each segmented fuel flow condition. The Honeywell engine operates at conditions typical of most microturbines. Gas turbine emissions often increase with increasing engine pressures. Testing at simulated engine pressures provides information about the pressure sensitivity of the emissions from a combustor without developing a full engine test.

Actual Outcomes:

1. Three GTSB concepts were evaluated. A two-segment GTSB was selected based on ease of fabrication, control system integration and the effect of internal baffles on air-fuel mixing. Alzeta engineers designed the selected GTSB concept to mate with both the Alzeta test facility and Honeywell's test facility for the Parallon 75 micro-turbine.
2. The GTSB was fabricated. The test GTSB was instrumented with thermocouples and gas sample lines. No unusual problems were encountered.
3. The segmented GTSB was tested at atmospheric conditions at the Alzeta test facility. It was operated stably at six conditions that simulated engine power conditions from idle to full power. The NOX emissions were less than 5 ppm (adjusted to 15% oxygen) and CO emissions were less than 10 ppm. The fuel flow split between the two segments was adjusted at each operating condition to optimize the emissions.
4. The segmented GTSB for the Parallon 75 was fabricated and installed in the pressurized test facility at Honeywell. Testing of the segmented GTSB was accomplished at five of the six planned engines conditions. The selected set points were established in terms of air flow through the GTSB. These points were: 13.6 pounds per hour (pph), 18.5 pph, 24.7 pph, 30.8 pph, 37 pph, and 41.6 pph (full power). The test was halted during the transition to full power test conditions due to a mechanical failure of the GTSB. Alzeta engineers believed that the failure was caused by flashback (the flame-front moved backwards toward the GTSB surface and rapidly burned the air-fuel mixture inside of the fuel injector). All tests performed up to the full engine operating condition demonstrated NOX below 5 ppm (adjusted to 15% oxygen) and CO less than 10 ppm. Unburned hydrocarbon emissions were undetectable under most conditions. All tests were accomplished using only one segment of the two-segment GTSB. The tests using various fuel splits between segments could not be accomplished after the failure of the test GTSB. Since only one day of testing was available at the Honeywell test facility, retesting could not be accomplished.

Conclusions:

Alzeta's segmented GTSB operated as planned at atmospheric pressure conditions. Alzeta's GTSB is capable of producing sub-5 ppm NOX , sub-10 ppm CO, and near zero unburned hydrocarbons at partial load operating conditions of the Honeywell Parallon 75 micro-turbine. Collected temperature data demonstrate that GTSB combustion performance is consistent with Honeywell's combustor design and can be adapted without changing the materials of construction. Demonstration of the segmented GTSB at full engine load conditions was not accomplished due to component failure.

Subsequent to the completion of this project, Honeywell decided to exit the micro-turbine business. This does not diminish the value of the research conducted during this project. Even though the important technical objective of testing a segmented GTSB at engine pressures is yet to be achieved, this EISG funded project has advanced segmented GTSB technology.

Benefits to California:
Once commercialized, the GTSB may allow low emissions turbine generators to be sited in California at a reasonable cost. Actual engine emissions with the GTSB must meet emission control standards in effect at the time of commercialization. The segmented GTSB appears to provide low emissions over a broader load range than currently available technology. This increases design and operational flexibility for turbine engine manufacturers. Distributed power generation has the potential to reduce peak demand on California's power grid and provide reliable backup power in the face of potential power shortages.

Recommendations:
Successful demonstration of the segmented GTSB at points traversing the startup fuel schedule and over the entire load range at atmospheric conditions could lead to an engine ready design and testing in a micro-turbine or full size turbine. Once the GTSB is installed in an engine, the engine start schedule and control logic will have to be developed to provide low emissions over the load range. Extended demonstration in a test or field engine will provide critical operating data for the commercial GTSB micro-turbine product. Finally, GTSB durability and flashback prevention should be objectives of subsequent research and development. The California Energy Commission awarded Alzeta another development program for this burner concept in March of 2001 and has recently announced its intention to expand this line of research under the Environmentally Preferred Advanced Generation subject area of the PIER Program. The Program Administration endorses these actions.

Project Status:
- 100% Completed.
- Completed on Schedule.
- Completed within Budget.
- Final Report Completed.
- Feasibility Analysis Report Completed.

Process for Converting Sewage Sludge& Municipal Solid Wastes to Clean Fuels

EISG Grant Number: 99-04
PIER Area: Renewables
Principal Investigator: Radon Tolman (760) 967-8494
Organization: Environmental Energy Systems, Inc.
Grant Amount: $75,000
Status: Completed

Project Description:
Most new power plants being installed in California are Gas Turbine Combined Cycle (GTCC) plants that burn increasingly expensive natural gas and fuel oil to produce electricity at up to 60% efficiency. These plants can be installed in less than half the time and at less than half the cost of new coal-fired plants and Integrated Gasification Combined Cycle (IGCC) plants that use cheap dirty fuels, but are less than 42% efficient. A new system is needed to adapt the new plants to cheaper fuels, while maintaining their efficiency and environmental performance.

This project researched the feasibility of a supercritical water gasification (SCWG) process to convert compost made from municipal solid wastes and sewage sludge to clean energetic gases. The expectation is to reduce the fuel costs of GTCC plants and to improve both efficiency and environmental performance of existing steam power plants.

Proposed Outcomes:
1. Determine the feasibility of using SCWG to gasify composted municipal solid waste/sludge, consisting of at least 23 wt% solids, with a minimum 96% conversion of carbon to gas.
2. Verify through visual inspection that no significant erosion, corrosion and deposition occurred inside the bench-scale SCWG system.
3. Assess the feasibility of recycling resulting liquids for "zero effluent" design.
4. Update and validate simplified thermodynamic computer simulation and a life cycle cost models that can be used to predict system performance with various fuels.

Actual Outcomes:
1. Use of SCWG to gasify composted municipal solid waste/sludge is feasible by a wide margin:
   - We produced a pumpable slurry mixture containing 40 wt% solids, exceeding the target goal by 74%.
   - The bench-scale system converted over 98% of the carbon in the slurry to energetic gases and steam, including clean pressurized methane, hydrocarbons and carbon oxides in less than one minute, which is twice as fast as the target time.
2. No noticeable erosion, corrosion or deposition was observed in the test equipment.
3. Total suspended solids in the liquid effluent was less than 10%, supporting the feasibility of recycling liquids for slurry preparation after filtering to provide a "zero effluent" design. No toxic materials were produced that would limit disposal of the residue in a landfill.
4. A thermodynamic computer simulation model and a life cycle cost model were prepared, however, there was insufficient funding in the current project to validate the models over a range of inputs, including the test data. Equilibrium compositions were assumed to be sufficiently close to expected commercial operations to provide preliminary predictions of system performance. Results of the computer simulations included:
   - Projected 62% thermal efficiency to electric power for the entire proposed hybrid plant. Projected efficiency for retrofit in an existing steam power plant is 52%.
   - Projected capital costs of $1,100/kWh for a new hybrid plant, with projected cost of baseload power generation at $100/MWh.
   - Projected capital costs of $500/kWh for retrofit to an existing GTCC plant, with projected cost of baseload power generation at $50/MWh.

- Retrofits for repowering existing Steam plants are competitive with GTCC plants burning natural gas costing $3.00 or more /million Btu.

Conclusions:

1. The test results support the continued investigation of composted municipal waste as an economical fuel source for GTCC and existing steam power plants.
2. We demonstrated that compost made from municipal solid wastes and sewage sludge can be made into a slurry with 40 wt% solids, which significantly increases the range of applications, including the production of valuable byproducts, such as hydrogen. This mixture tended to clog in the ¼" preheater tube which was completely alleviated by changing to 3/8" tubing. This problem is not expected in larger tubes.
3. The project successfully demonstrated that the compost slurry can be used in a SCWG process to produce energetic gases and steam, including approximately 35% gaseous hydrocarbons and hydrogen, the largest fraction being methane. The remaining 65% of the carbon in the feed was converted mainly to CO2 and a small amount of CO. The CO2 can be separated for reduced emissions. It is unknown what effect compost grinding had on residence time for gasification. It is also unknown what impact scaling up the reactor tubes will have on the SCWG process.
5. Sufficient yield data was collected to determine gas composition, perform a carbon balance and perform a preliminary evaluation of recycling liquids after filtering for slurry preparation. While no corrosion, erosion or deposition was observed after running the tests, the tests conducted were not designed to accurately assess those effects over long term testing.
6. Environmentally, based on residence time and projected full scale HRSG tubes, a standard module of 100 HRSG tubes per 25 MW turbine can consume an estimated 170 tons of composted municipal solid waste per day, reducing it to approximately 34 tons of inorganic material.
7. The results of the computer simulation models are encouraging in terms of supporting an economic case for commercialization however, the models still include many assumptions that remain to be validated.

Benefits to California:

This project contributed to the Public Interest Energy Research (PIER) program objective of improving energy cost of California electricity through the use of inexpensive biomass fuels. The project also supports the PIER objective of improving the environmental risk by diverting waste streams away from landfills.

Successful commercialization of SCWG technologies could promote business opportunities in several industries, including process development, waste disposal, electrical generation, pollution control and transportation fuels.

Recommendations:
The next research step is to scale up the critical elements of the SCWG system to eliminate the problems associated with the bench-scale system used in the current project and to conduct a series of tests that more accurately represent anticipated operational conditions. General Atomics in San Diego is currently constructing a scaled up SCWG test rig with full-scale HRSG reactor tubes that would be suitable for answering the outstanding technical questions. The following technical questions need to be answered:

1. Test a full range of slurry concentrations in full size reactor tubes to identify the associated impact on steam and fuel gas production.
2. Identify the optimum level of grinding required (if any) for trouble free gasification in full size reactor tubes.
3. Confirm slurry distribution in a 10-tube inlet manifold for scale-up to a commercial plant.
4. Confirm that the energy balance for SCWG is the same using full size reactor tubes.
5. Evaluate the longer-term potential for corrosion, erosion or deposition.
6. Test condensate for yield and quality and cleaning methods for recycle to slurry preparation.
7. Test ash for beneficial use or land filling.
8. Test mild operating conditions for byproduct yields and quality, including liquid hydrocarbons and carbon.
9. Refine computer models and economic feasibility analyses for retrofit to existing gas turbines and boilers.
10. Collect and test fuel gases for combustibility in existing gas turbines, fuel cells and boilers.

Project Status:

- 100% Completed.
- Completed on Schedule.
- Completed within Budget.
- Final Report Completed.
- Feasibility Analysis Report Completed.