NONRESIDENTIAL ALTERNATIVE CALCULATION MANUAL (ACM) APPROVAL METHOD

CALIFORNIA ENERGY COMMISSION

REGULATIONS / STANDARDS

for the 2008 BUILDING ENERGY EFFICIENCY STANDARDS

This version of the revised 2008 Nonresidential ACM Approval Manual is the marked version indicating the changes from the original 2008 Nonresidential ACM Approval Manual.

December 2008
CEC-400-2008-003-CMF

Arnold Schwarzenegger
Governor

Mike Chrisman
Secretary for Resources

CALIFORNIA
ENERGY
COMMISSION

Jackalyne Pfannenstiel
Chairman

Vice Chair
James D. Boyd

Commissioners
Arthur H. Rosenfeld, Ph.D
Jeffrey Byron
Karen Douglas, J.D.

Melissa Jones
Executive Director

Valerie Hall
Deputy Director
Efficiency and
Renewable Energy Division

Bill Pennington
Office Manager
Buildings and Appliances Office

Maziar Shirakh, PE
Project Manager
Buildings and Appliances Office

Acknowledgments

The Building Energy Efficiency Standards (Standards) were first adopted and put into effect in 1978 and have been updated periodically in the intervening years. The Standards are a unique California asset and have benefitted from the conscientious involvement and enduring commitment to the public good of many persons and organizations along the way. The 2008 Standards development and adoption process continued that long-standing practice of maintaining the Standards with technical rigor, challenging but achievable design and construction practices, and public engagement and full consideration of the views of stakeholders.

The revisions in the 2008 Standards were conceptualized, evaluated and justified through the excellent work of Energy Commission staff and consultants working under contract to the Energy Commission, Pacific Gas and Electric Company, Southern California Edison Company, San Diego Gas and Electric Company, and Southern California Gas Company. At the Energy Commission, Maziar Shirakh, PE, served as the project manager and senior engineer. Bill Pennington, Manager of the Buildings and Appliances Office, provided overall guidance to the staff and consultants. Valerie Hall, Deputy Director of the Energy Efficiency and Renewable Division provided policy guidance to the Staff. William Staack and Dick Ratliff provided legal counsel to the staff. Other key technical staff contributors included Jeff Miller PE, Gary Flamm, Bruce Maeda, Payam Bozorgchami, Tav Commins, Rob Hudler, Alan Marshall, and Nelson Pena. Additional staff input and assistance came from Chris Gekas, Suzie Chan, Martha Brook PE, Smita Gupta, Claudia Orlando, Chris Olvera, Beverly Duffy, and the Energy Commission's Web Team. Key consultants included Architectural Energy Corporation, Bruce Wilcox, Taylor Engineering, Proctor Engineering, Benya Lighting Design, Chitwood Energy Management, Davis Energy Group, EnerComp, and E3. The Heschong Mahone Group served as PG&E's prime consultant.

The authors are grateful to many people and organizations that contributed to the development and production of this compliance manual. The manual reflects, to a large extent, the comments made by the many people who took time to carefully review earlier versions. Reviewers who significantly contributed to the content include members of CABEC and EnergySoft.

Lastly, so many others contributed helpful suggestions, comments, and criticism that are impossible to show a complete list. However, their assistance is acknowledged and greatly appreciated.

The Energy Commission dedicates the adoption of
*the **2008 Building Energy Efficiency Standards** to*
***Jon Leber, PE**, (November 13, 1947 - February 14, 2008)*
for his 30 years of dedication to excellence in the development and implementation of the most energy efficient building standards in the country and a model for others to follow.

He was the quintessential public servant.

NOTICE

This version of the 2008 Nonresidential ACM Manual is a marked version; that is, it contains underlined or struck-out text showing changes from the 2005 version. Single underlines and strikethroughs show changes that were made for the distribution of the 45 day language. Double underlines and strikethroughs show changes that were made to the document between the distribution of the 45 day language and the distribution of the 15 day language. For more information, visit www.energy.ca.gov/title24, call the Title 24 Energy Efficiency hotline at 800/772-3300 (toll-free from within California) or 916/654-5106, or send email to title24@energy.state.ca.us.

Table of Contents

1. Overview of Process 1-1
1.1 Application Checklist 1-3
1.2 Types of Approval 1-4
1.2.1 Full Approval & Re-Approval of Compliance Software 1-4
1.2.2 Approval of New Features & Updates 1-5
1.3 Challenges 1-5
1.4 Alternative Compliance Software Program Tests 1-6
1.5 Decertification of Compliance Software Programs 1-6

2. Required Compliance Software Capabilities 2-1
2.1 Compliance 2-1
2.1.1 Type of Project Submittal 2-1
2.1.2 New Building or Addition Alone 2-1
2.1.3 Scope of Compliance Calculations 2-1
2.1.4 Climate Zones 2-3
2.1.5 Reference Year 2-3
2.1.6 Time Dependent Valuation 2-3
2.1.7 Reference Method Comparison Tests 2-4
2.2 Compliance Documentation 2-4
2.2.1 Certificate of Compliance Form(s) 2-6
2.2.2 Supporting Compliance Forms 2-7
2.3 Building Shell 2-8
2.3.1 Spaces 2-9
2.3.2 Construction Assemblies 2-12
2.3.3 Above-Grade Opaque Envelope 2-19
2.3.4 Interior Surfaces 2-20
2.3.5 Fenestration and Doors 2-22
2.3.6 Concrete Slab-On-Grade Floors, Perimeters, and Basement Floors 2-31
2.4 Building Occupancy 2-35
2.4.1 Assignment 2-35
2.4.2 Lighting Power 2-42
2.4.3 Schedules 2-53
2.5 HVAC Systems and Plants 2-63
2.5.1 Thermal Zoning 2-63
2.5.2 Heating & Cooling Equipment 2-64
2.5.3 Air Distribution Systems 2-84
2.6 Service Water Heating 2-120
2.6.1 Nonresidential Service Water Heating 2-121
2.6.2 High-Rise Residential Hotel/Motel Water Heating Calculation Methods 2-125

3. Optional Capabilities 3-1
3.1 Alternations and Additions 3-1
3.1.1 Additions & Alterations 3-1
3.1.2 Alteration or Addition Plus Altered Existing 3-2
3.1.3 Duct Sealing in Additions and Alterations 3-2
3.1.4 Output Reports for Existing Buildings 3-3
3.2 Building Occupancy 3-4
3.2.1 Alternate Occupancy Selection Lists 3-4
3.2.2 Light Heat to Zone 3-5
3.3 HVAC Systems and Plants 3-5
3.3.1 Absorption Cooling Equipment 3-6
3.3.2 Gas-Engine Driven Chillers and Heat Pumps 3-6
3.3.3 Chiller Heat Recovery 3-7
3.3.4 Exhaust Heat Recovery 3-7
3.3.5 Optional System Types 3-8

3.3.6 Combined Hydronic Systems ... 3-10
3.3.7 Alternate Equipment Performance Data ... 3-10
3.3.8 Cooling Towers Types ... 3-11
3.3.9 Pump Controls ... 3-12
3.3.10 Air Foil Centrifugal Fan with Discharge Dampers ... 3-13
3.3.11 Separate Control for Supply, Return and Relief Fans ... 3-14
3.3.12 Air Economizers Control Strategies ... 3-14
3.3.13 Water Side Economizers ... 3-15
3.3.14 Zone Terminal Controls ... 3-16
3.3.15 Solar Thermal Energy ... 3-17
3.3.16 Multiple Hydronic Circulation Loops ... 3-17
3.3.17 Underfloor Air Distribution (UFAD) Systems ... 3-18
3.3.18 Thermal Energy Storage (TES) Systems ... 3-20
3.3.19 Distributed Energy Storage DX AC System (DES/DXAC) ... 3-22
3.4 Vendor Defined Optional Capabilities ... 3-23

4. User's Manual and Help System Requirements ... 4-1
4.1 Overview ... 4-1
4.2 Modeling Guidelines and Input References ... 4-1
4.3 Required Modeling Capabilities ... 4-2
4.3.1 General Requirements ... 4-2
4.3.2 Occupancies and Spaces ... 4-3
4.3.3 Walls, Roofs and Floors ... 4-6
4.3.4 Fenestration ... 4-8
4.3.5 Lighting ... 4-11
4.3.6 HVAC Systems and Plant ... 4-12
4.3.7 Water Heating ... 4-17
4.4 Optional Modeling Capabilities ... 4-18
4.4.1 Additions and Alterations ... 4-18
4.4.2 Alternative Occupancy Selection ... 4-19
4.4.3 HVAC Systems and Plant ... 4-19
4.5 Vendor Defined Optional Capabilities ... 4-20
4.6 Compliance Forms ... 4-20

5. Reference Method Comparison Tests ... 5-1
5.1 Overview ... 5-1
5.1.1 Base Case Prototype Buildings and HVAC Systems ... 5-1
5.1.2 Climate Zones ... 5-7
5.1.3 Labeling Computer Runs ... 5-8
5.1.4 Test Criteria ... 5-8
5.2 General Requirements ... 5-9
5.2.1 Partial Compliance Tests - A1 Series (2 tests) ... 5-10
5.2.2 Exterior Opaque Envelope Tests ... 5-10
5.2.3 Envelope Glazing Tests ... 5-11
5.2.4 Occupancy Tests ... 5-14
5.2.5 Lighting Tests - D1 Series (4 tests) ... 5-16
5.2.6 Ventilation Tests - E1 Series (6 tests) ... 5-16
5.2.7 Process Loads Tests - E2 Series (6 tests) ... 5-17
5.2.8 HVAC System Tests - F1 Series (5 tests) ... 5-17
5.2.9 System Sizing Tests - G1 Series (6 tests) ... 5-18
5.2.10 HVAC Distribution Efficiency Tests ... 5-19
5.3 Optional Capabilities Tests ... 5-19
5.3.1 OC Test Series - Compliance Options ... 5-19
5.3.2 O1 Test Series - Fan Powered VAV Boxes ... 5-20
5.3.3 O2 Test Series - Supply/Return Fan Options ... 5-20
5.3.4 O3 Test Series - Special Economizer Options ... 5-21
5.3.5 O4 Test Series - Special HVAC Control Option ... 5-21

5.3.6 O6 Test Series - Additional Chiller Options 5-21
5.3.7 O7 Test Series - Additional HVAC System Options 5-22
5.3.8 O9 Test Series - Evaporative Cooling Options 5-22

6. Vendor Requirements 6-1
6.1 Availability to Commission 6-1
6.2 ~~Building Department~~Enforcement Agency Support 6-1
6.3 User Support 6-1
6.4 Compliance Software -Vendor Demonstration 6-1

List of Tables

Table N2-1 – Standard Design Construction Assemblies From Reference Joint Appendix 4 2-14
Table N2-2 – Slab-on-Grade Floor Coefficients 2-32
Table N2-3 – Basement Wall Coefficients 2-33
Table N2-4 – Basement Floor Coefficients 2-33
Table N2-5 – Occupancy Assumptions When Lighting Plans are Submitted for the Entire Building or When Lighting Compliance is not Performed 2-38
Table N2-6 – Area Occupancy Assumptions When Lighting Plans are Submitted for Portions or for the Entire Building or When Lighting Compliance is not Performed 2-39
Table N2-7 – Schedule Types of Occupancies & Sub-Occupancies 2-55
Table N2-8 – Nonresidential Occupancy Schedules (Other than Retail) 2-57
Table N2-9 – Hotel Function Occupancy Schedules 2-59
Table N2-10 – Residential Occupancy Schedules (Including Hotel/Motel Guest Rooms) with Setback Thermostat for Heating 2-60
Table N2-11 – Residential Occupancy Schedules (Including Hotel/Motel Guest Rooms) Without Setback Thermostat 2-61
Table N2-12 – Retail Occupancy Schedules 2-62
Table N2-13 – Standard Design HVAC System Selection 2-67
Table N2-14 – System #1 and System #2 Descriptions 2-67
Table N2-15 – System #3 Description 2-68
Table N2-16 – System #4 Description 2-68
Table N2-17 – System #5 Description 2-69
Table N2-18 – Default Coefficients for COOL-CAP-FT, COOL-EIR-FT, HEAT-CAP-FT and HEAT-EIR-FT Equations 2-71
Table N2-19 – Data Input Requirements for Equipment Performance Curves 2-73
Table N2-20 – Minimum Nominal Efficiency for Electric Motors (%) 2-84
Table N2-21 – Pipe Head Multipliers Based on Pipe Size and Flow at Connection to the Cooling Tower ... 2-108
Table N2-22 – Default Capacity Coefficients for Electric Air-Cooled Chillers 2-116
Table N2-23 – Default Capacity Coefficients for Electric Water-Cooled Chillers 2-116
Table N2-24 – Default Efficiency EIR-FT Coefficients for Air-Cooled Chillers 2-116
Table N2-25 – Default Efficiency EIR-FT Coefficients for Water-Cooled Chillers 2-117
Table N2-26 – Default Efficiency EIR-FPLR Coefficients for Air-Cooled Chillers 2-117
Table N2-27 – Default Efficiency EIR-FPLR Coefficients for Water-Cooled Chillers 2-117
Table N5-1 – Climate Zones Tested 5-7
Table N5-2 – Occupancy Mixes for Tests 5-10
Table N5-3 – A2 Test Series Summary 5-11
Table N5-4 – F1 Test Series Summary 5-18

List of Figures

Figure N5-1 – Prototype A 5-3
Figure N5-2 – Prototype B 5-5
Figure N5-3 – Prototype D 5-6

List of Appendices

Appendix A – Nonresidential Compliance Software Approval Application

Appendix B – Technical Databases for Test Runs

Appendix C – Test Nonresidential Air Distribution Systems

Appendix D – Calculation of Distribution Efficiency of Single-Zone Nonresidential Air Distribution Systems in Buffer Spaces or Outdoors

Appendix E – Algorithm for Energy Use of Distributed Energy Storage Direct-Expansion Air Conditioners

1. Overview of Process

This Manual explains the requirements for approval of Alternative Calculation Methods (~~ACMs~~also referred to as compliance software programs) used to demonstrate compliance with the Energy Efficiency Standards for nonresidential buildings, hotels & motels, and high-rise residential buildings. The approval process for nonresidential ~~Alternative Calculation Methods (ACMs~~compliance software programs is specified in Title 24, Part 1,~~ Chapter 10, Sections~~§§ 10-101-through 10-110 of the California Code of Regulations. Nonresidential ~~Alternative Calculation Methods (ACMs~~compliance ~~)~~software programs are used in the performance approach to demonstrate compliance with the Energy Efficiency Standards for nonresidential buildings as outlined in Title 24, Part 6, Subchapter 5, ~~Section~~§ 141. The Energy Commission develops and implements the Energy Efficiency Standards.

The purpose and policy of this Alternative Calculation Method (ACM) Approval Manual is to specify the California Energy Commission approval process for nonresidential ~~ACMs~~compliance software and to define the assumptions and procedures of the reference method against which ~~ACMs~~compliance software will be evaluated. The performance compliance requirements and procedures apply to nonresidential buildings, hotels & motels, and high-rise residential buildings. A separate ACM Approval Manual addresses low-rise residential buildings. The procedures and processes described in this manual are designed to preserve the integrity of the performance compliance process.

The reference procedures and method described in this manual establish the basis of comparison for all ~~ACMs~~compliance software. The approval process ensures that a minimum level of energy efficiency is achieved regardless of the ~~Alternative Calculation Method (ACM)~~compliance software used. This is accomplished

- by having candidate ~~ACMs~~compliance software pass a series of Reference Method comparison tests,
- by specifying input which may be varied in the compliance process for credit and which inputs are fixed or restricted,
- by defining standard reports output requirements, and
- by ~~ACM~~compliance software vendor-certification to the requirements in this manual.

The reference method ~~calculation engine~~ includes reference procedures described in this manual and the reference computer program, which is Version 110 of the DOE 2.1E computer program.

Optional capabilities are a special class of capabilities and user inputs that are not required of all ~~ACMs~~compliance software but may be included at the option of the vendor. The optional capabilities included in this manual have minimal testing requirements. Additional optional capabilities may be proposed by vendors. For both cases, the Commission reserves the right to disapprove the certification application for a specific optional capability if there is not compelling evidence presented in the public process showing that the optional capability is sufficiently accurate and suitable to be used for compliance with the Standards. In addition, energy efficiency measures modeled by optional capabilities shall be capable of being verified by local enforcement agencies.

The Commission's purpose in approving additional optional capabilities is to accommodate new technologies which have only begun to penetrate the market and new modeling algorithms. Optional capabilities which evaluate measures already in relatively common use shall have their standard design for the measure based on the common construction practice (or the typical base situation) for that measure since common practice is the inherent basis of the standards for all measures not explicitly regulated. For example, the Commission has no interest in an optional capability that evaluates the energy impacts of dirt on windows unless a new technology produces substantial changes in this aspect of a building relative to buildings without this technology. The burden of proof that an optional capability should be approved lies with the applicant and will be influenced by the ability of the reference computer program, DOE 2.1E to model the optional capability.

Companion documents which are helpful to prepare a~~n ACM~~compliance software for certification include the latest editions of the following Commission publications:

- *Energy Efficiency Standards*
- *Appliance Efficiency Regulations*
- *Nonresidential Compliance Manual*
- *Non~~R~~residential Alternative Calculation Method~~Manual~~ (ACM) Manual*
- *Nonresidential Reference Appendices*
- *Reference Joint Appendices*

In this manual the term "Standards" means the Building Energy Efficiency Standards, Title 24, Part 6 of the California Code of Regulations. The term "compliance" means that a building design in an application for a building permit complies with the "Standards" and meets the requirements described for building designs therein.

- *Compliance Options Approval Manual for the Building Energy Efficiency Standards*

There are a few special terms that are used in this Manual. The Commission ***approves*** the use of ~~an ACM~~compliance software for compliance. Commission approval means that the Commission accepts the applicant's certification that ~~an ACM~~compliance software meets the requirements of this Manual. The proponent of ~~a~~ candidate ~~ACM~~compliance software is referred to as a ***vendor***. The vendor shall follow the procedure described in this document to publicly certify to the Commission that the ~~ACM~~compliance software meets the criteria in this document for:

- *Accuracy* and *reliability* when compared to the DOE-2.1E reference program; and
- *Suitability* in terms of the accurate calculation of the correct energy budget, the printing of standardized forms, and the documentation on how the program demonstrates compliance.

In addition to explicit and technical criteria, Commission approval will also depend upon the Commission's evaluation of:

- *Enforceability* in terms of reasonably simple, reliable, and rapid methods of verifying compliance and application of energy efficiency features modeled by the ~~ACM~~compliance software and the inputs used to characterize those features by the ~~ACM~~compliance software users.
- *Dependability* of the installation and energy savings of features modeled by the ~~ACM~~compliance software. The Commission will evaluate the probability of the measure actually being installed and remaining functional. The Commission shall also determine that the energy impacts of the features that the ~~ACM~~compliance software is capable of modeling will be reasonably accurately reflected in real building applications of those features. In particular, it is important that the ~~ACM~~compliance software does not encourage the replacement of actual energy savings with theoretical energy savings due to tradeoffs allowed by the~~an~~ ~~ACM~~compliance software.

For the vendor, the process of receiving approval of ~~an ACM~~compliance software includes preparing an application, working with the Commission staff to answer questions from either Commission staff or the public, and providing any necessary additional information regarding the application. The application includes the four basic elements outlined below. The Commission staff evaluates the ~~ACM~~compliance software based on the completeness of the application and its overall responsiveness to staff and public comment.

The four basic requirements for approval include:

1. Required capabilities:
   - C~~The ACMc~~ompliance software shall have all the required input capabilities explained in Chapter 2.
   - C~~Alternative Calculation Methods (ACMsc~~ompliance software~~s)~~ may be approved for additional optional capabilities such as those described in Chapter 3.
2. Accuracy of simulation:

- The ~~ACM~~compliance software shall demonstrate acceptable levels of accuracy by performing and passing the required certification tests discussed in Chapter 5.
- The ~~ACM~~compliance software vendor performs the certification tests in Chapter 5. The vendor conducts the specified tests, evaluates the results and certifies in writing that the ~~ACM~~compliance software passes the tests. The Commission will perform spot checks and may require additional tests to verify that the proposed ~~ACM~~compliance software is appropriate for compliance purposes.
- When energy analysis techniques are compared, two potential sources of discrepancies are the differences in user interpretation when entering the building specifications, and the differences in the ~~ACM~~compliance software's algorithms (mathematical models) for estimating energy use. The approval tests minimize differences in interpretation by providing explicit detailed descriptions of the test buildings that must be analyzed. For differences in the ~~Alternative Calculation Method's (ACM~~compliance software's~~)~~ algorithms, the Commission allows algorithms that yield equivalent results.

3. User's Manual or Help System:
   - The vendor shall develop a user's manual and/or help system that meets the specifications in Chapter 4.
4. Program support:
   - The vendor shall provide ongoing user and ~~building department~~enforcement agency support as described in Chapter 6.

The Commission may hold one or more workshops with public review and vendor participation to allow for public review of the vendor's application. Such workshops may identify problems or discrepancies that may necessitate revisions to the application.

Commission approval of ~~Alternative Calculation Methods (ACMs~~compliance software programs~~s)~~ is intended to provide flexibility in complying with the Standards. However, in achieving this flexibility, the ~~ACM~~compliance software shall not degrade the standards or evade the intent of the Standards to achieve a particular level of energy efficiency. The vendor has the burden of proof to demonstrate the accuracy and reliability of the ~~ACM~~compliance software relative to the reference method and to demonstrate the conformance of the ~~ACM~~compliance software to the requirements of this manual.

1.1 Application Checklist

The following items shall be included in an application package submitted to the Commission for ~~ACM~~compliance software approval:

- **~~ACMc~~Compliance Software Vendor Certification Statement.** A copy of the statement contained in Appendix ~~N~~A, signed by the ~~ACM~~compliance software vendor, certifying that the ~~ACM~~compliance software meets all Commission requirements, including accuracy and reliability when used to demonstrate compliance with the energy standards.
- **Computer Runs.** Copies of the computer runs specified in Chapter 5 of this manual on machine readable form as specified in Chapter 5 to enable verification of the runs.
- **Compliance Supplement and User's Manual.** The vendor shall submit a complete copy of their ~~ACM~~compliance software user's manual, including material on the use of the ~~ACM~~compliance software for compliance purposes.
- **Copy of the C~~ACMc~~ompliance S~~s~~oftware and Weather Data.** A machine readable copy of the ~~ACM~~compliance software for random verification of compliance analyses. The vendor shall provide weather data for all 16 climate zones.
- **TDV Factor Documentation.** The ~~ACM~~compliance software shall be able to apply the TDV multipliers described in ~~ACMcompliance software~~ Reference Joint Appendix ~~III~~JA3.

- **Application Fee.** The vendor shall provide an application fee of $2~~1~~,000.00 (two~~one~~ thousand dollars) as authorized by ~~Section~~§ 25402.1(b) of the Public Resources Code, made out to the "State of California" to cover costs of evaluating the application and to defray reproduction costs.

A cover letter acknowledging the shipment of the completed application package should be sent to:

Executive Director
California Energy Commission
1516 Ninth Street, MS-39
Sacramento, CA 95814-5512

Two copies of the full application package should be sent to:

C~~ACM~~ompliance Software Nonresidential Certification
California Energy Commission
1516 Ninth Street, MS-26
Sacramento, CA 95814-5512

Following submittal of the application package, the Commission may request additional information pursuant to Title 24, Part 1, ~~Section~~§ 10-110. This additional information is often necessary due to complexity of ~~many Alternative Calculation Methods (ACMs~~compliance software. Failure to provide such information in a timely manner may be considered cause for rejection or disapproval of the application. A resubmittal of a rejected or disapproved application will be considered a new application, including a new application fee.

1.2 Types of Approval

This Manual addresses two types of ~~ACM~~compliance software approval: full program approval (including amendments to programs that require approval), and approval of new program features and updates.

If ~~ACM~~compliance software vendors make a change to their programs as described in Sections 1.2.1 or 1.2.2, the Commission shall again approve the program. Additionally, any ~~ACM~~compliance software program change that affects the energy use calculations for compliance, the modeling capabilities for compliance, the format and/or content of compliance forms, or any other change which would affect a building's compliance with the Energy Efficiency Standards requires another approval.

Changes that do not affect compliance with the standards such as program changes to the user interface may follow a simplified or streamlined procedure for approval of the changes. To comply with this simpler process, the ~~ACM~~compliance software vendor shall certify to the Commission that the new program features do not affect the results of any calculations performed by the program, shall notify the Commission of all changes and shall provide the Commission with one updated copy of the program and User's Manual. Examples of such changes include fixing logical errors in computer program code that do not affect the numerical results (bug fixes) and new interfaces.

1.2.1 Full Approval & Re-Approval of ~~Alternative Calculations Methods (C~~~~ACMs~~ompliance Software~~s)~~

The Commission requires program approval when a candidate ~~ACM~~compliance software has never been previously approved by the Commission, when the ~~ACM~~compliance software vendor makes changes to the program algorithms, or when any other change occurs that in any way affects the compliance results. The Commission may also require that all currently approved ~~Alternative Calculation Methods (ACMs~~compliance software be approved again whenever substantial revisions are made to the Standards or to the Commission's approval process.

The Commission may change the approval process and require that all ~~Alternative Calculation Methods (ACMs~~compliance software be approved again for several reasons including:

a) If the standards undergo a major revision that alters the basic compliance process, then ~~Alternative Calculation Methods (ACMs~~compliance software would have to be updated and re-approved for the new process.

b) ~~c)~~If new analytic capabilities come into widespread use, then the Commission may declare them to be required ~~ACM~~compliance software capabilities, and may require all ~~ACM~~compliance software vendors to update their programs and submit them for re-approval.

When re-approval is necessary, the Commission will notify all ~~ACM~~compliance software vendors of the timetable for renewal. There will also be a revised *ACM Approval Manual* published with complete instructions for re-approval.

A~~n~~ ~~ACM~~compliance software program must be re-approved for new optional modeling capabilities when the vendor adds those optional capabilities. The vendor shall provide a list of the new optional capabilities and demonstrate that those capabilities are documented in revised user documentation. This may not include computer runs previously submitted.

Re-approval shall be accompanied by a cover letter explaining the type of amendment(s) requested and copies of other documents as necessary. The timetable for re-approval of amendments is the same as for full program approval.

1.2.2 Approval of New Features & Updates

Certain types of changes may be made to previously approved nonresidential ~~Alternative Calculation Methods (ACMs~~compliance software through a streamlined procedure, including implementing a computer program on a new machine and changing executable program code that does not affect the results.

Modifications to previously approved ~~Alternative Calculation Methods (ACMs~~compliance software including new features and program updates are subject to the following procedure:

- The ~~ACM~~compliance software vendor shall prepare an addendum to the Compliance Supplement or ~~ACM~~compliance software user's manual, when new features or updates affect the outcome or energy efficiency measure choices, describing the change to the ~~ACM~~compliance software. If the change is a new modeling capability, the addendum shall include instructions for using the new modeling capability for compliance.
- The ~~ACM~~compliance software vendor shall notify the Commission by letter of the change that has been made to the ~~ACM~~compliance software. The letter shall describe in detail the nature of the change and why it is being made. The notification letter shall be included in the revised Compliance Supplement or ~~ACM~~compliance software user's manual.
- The ~~ACM~~compliance software vendor shall provide the Commission with an updated copy of the ~~ACM~~compliance software and include any new forms created by the ~~ACM~~compliance software (or modifications in the standard reports).
- The Commission will respond within 45 days. The Commission may approve the change, request additional information, refuse to approve the change or require that the ~~ACM~~compliance software vendor make specific changes to either the Compliance Supplement addendum or the ~~ACM~~compliance software program itself.

With Commission approval, the vendor may issue new copies of the ~~ACM~~compliance software with the Compliance Supplement addendum and notify ~~ACM~~compliance software users and building officials.

1.3 Challenges

Building officials, program users, program vendors, Commission staff or other interested parties may challenge any nonresidential ~~ACM~~compliance software approval. If any interested party believes that a compliance program, an algorithm or method of calculation used in a compliance program, a particular capability or other aspect of a program provides inaccurate results or results which do not conform to the criteria described in Section 5.1.4 the party may initiate the challenge of the program. (Please see Section 1.5 Decertification of ~~Alternative Calculation Methods (ACMs~~Compliance Software Programs for a description of the process for a challenge.)

1.4 Alternative ~~ACM~~Compliance Software Program Tests

Chapter 5 of this Manual contains a series of tests to verify that ~~Alternative Calculation Methods (ACMs~~compliance software accurately demonstrate compliance. A~~n~~ ~~ACM~~compliance software vendor may propose alternate tests when the vendor believes that one or more of the standard tests are not appropriate for the ~~ACM~~compliance software. The Commission will evaluate the alternate tests and will accept them if they are found to reflect acceptable engineering techniques.

If alternate tests are accepted by the Commission, the tests will be available for use by all ~~Alternative Calculation Methods (ACMs~~compliance software programs. An alternate test will coexist with the standard test presented in this Manual until the Manual is revised. When a new version of this Manual is produced, the alternative test may be substituted for the current test or may continue to coexist with the original test.

1.5 Decertification of ~~Alternative Calculation Methods (ACMs)~~Compliance Software Programs

The Commission may *decertify* (rescind approval of) an alternative calculation method through the following means:

- All ~~ACMs~~compliance software programs are decertified when the Standards undergo substantial changes which usually occur every three years.
- Any ~~ACM~~compliance software can be decertified by a letter from the ~~ACM~~compliance software vendor requesting that a particular version (or versions) of the ~~ACM~~compliance software be decertified. The decertification request shall briefly describe the nature of the program errors or "bugs" which justify the need for decertification.
- Any "initiating party" may commence a procedure to decertify an ~~ACM~~compliance software according to the steps outlined below. The intent is to include a means whereby unfavorable comparisons with the reference method, serious program errors, flawed numeric results, improper forms and/or incorrect program documentation not discovered in the certification process can be verified, and use of the particular ~~ACM~~compliance software version discontinued. In this process, there is ample opportunity for the Commission, the ~~ACM~~compliance software vendor and all interested parties to evaluate any alleged problems with the ~~ACM~~compliance software program.

  NOTE 1: The primary rationale for a challenge is unfavorable comparison with the reference method which means that for some particular building design with its set of energy efficiency measures, the ~~ACM~~compliance software fails to meet the criteria used for testing ~~ACMs~~compliance software programs described in Section 5.1.4.

  NOTE 2: Flawed numeric results where the ~~ACM~~compliance software meets the test criteria used in Section 5.1.4. In particular when ~~an ACM~~compliance software indicates the failure of a building to comply by a significant margin even though the reference method indicates that the building complies, i.e., the reference method has a proposed design building energy budget less than or equal to the standard design building energy budget.

  C~~An ACM~~compliance software is allowed to have inputs for energy efficiency measures that it cannot model. The proper method for a~~n~~ ~~ACM~~compliance software to accommodate such inputs and features is for the ~~ACM~~compliance software to automatically ensure compliance failure by a significant margin whenever that feature's inputs are entered by the user. In such cases numeric results are not directly relevant as long as the building fails to comply by an adequate margin. Lighting and receptacle/process loads however shall be within the numerically acceptable ranges.

Following is a description of the process for challenging ~~an ACM~~compliance software or initiating a decertification procedure:

1. Any party may initiate a review of ~~an ACM~~compliance software's approval by sending a written communication to the Commission's Executive Director. (The Commission may be the initiating party for this type of review by noticing the availability of the same information listed here.)

The initiating party shall:

a) State the name of the ~~ACM~~compliance software and the program version number(s) which contain the alleged errors;

b) Identify concisely the nature of the alleged errors in the ~~ACM~~compliance software which require review;

c) Explain why the alleged errors are serious enough in their effect on analyzing buildings for compliance to justify a decertification procedure; and,

d) Include appropriate data on ~~IBM PC compatible floppy diskettes~~any media compatible with Windows XP or above and/or information sufficient to evaluate the alleged errors.

2. The Executive Director shall make a copy or copies of the initial written communication available to the ~~ACM~~compliance software vendor and interested parties within 30 days.

3. Within 75 days of receipt of the written communication, the Executive Director may request any additional information needed to evaluate the alleged ~~ACM~~compliance software errors from the party who initiated the decertification review process. If the additional information is incomplete, this procedure will be delayed until the initiating party submits complete information.

4. Within 75 days of receipt of the initial written communication, the Executive Director may convene a workshop to gather additional information from the initiating party, the ~~ACM~~compliance software vendor and interested parties. All parties will have 15 days after the workshop to submit additional information regarding the alleged program errors.

5. Within 90 days after the Executive Director receives the application or within 30 days after receipt of complete additional information requested of the initiating party, whichever is later, the Executive Director shall either:

   a) Determine that the ~~ACM~~compliance software need not be decertified; or,

   b) Submit to the Commission a written recommendation that the ~~ACM~~compliance software be decertified.

6. The initial written communication, all other relevant written materials, and the Executive Director's recommendation shall be placed on the ~~consent~~ calendar and considered at the next business meeting after submission of the recommendation. The matter may be removed from the consent calendar at the request of one of the Commissioners.

7. If the Commission approves the ~~ACM~~compliance software decertification, it shall take effect 60 days later. During the first 30 days of the 60-day period, the Executive Director shall send out a Notice to Building Officials and Interested Parties announcing the decertification.

All initiating parties have the burden of proof to establish that the review of alleged ~~ACM~~compliance software errors should be granted. The decertification process may be terminated at any time by mutual written consent of the initiating party and the Executive Director.

As a practical matter, the ~~ACM~~compliance software vendor may use the 180- to 210-day period outlined here to update the ~~ACM~~compliance software program, get it re-approved by the Commission, and release a revised version that does not have the problems initially brought to the attention of the Commission. Sometimes the ~~ACM~~compliance software vendor may wish to be the initiating party to ensure that a faulty program version is taken off the market.

2. Required ~~ACM~~Compliance Software Capabilities

This Chapter specifies required capabilities that ~~an ACM~~compliance software will be tested for and specifies how the reference computer simulation program will be used for required modeling capabilities. All of the required capabilities are described in terms of the capabilities and algorithms of the Commission's reference program. Compliance software~~An ACM~~ shall account for the energy performance effects of all of the features described in this chapter.

The modeling procedures and assumptions described in this chapter apply to both the *standard design* and *proposed design*. The requirements for the *standard design* include those that ~~ACMs~~compliance software shall apply to new features, altered existing features, unchanged existing features or all of the above. In order for ~~an ACM~~compliance software to become approved, it shall, at a minimum, accept all of the required inputs and meet the test criteria when compared against the reference computer program using procedures and assumptions as required in the sections describing the capabilities.

2.1 Compliance

2.1.1 Type of Project Submittal

~~ACMs~~Compliance software shall require the user to identify the type of project for which compliance is being demonstrated. The ~~ACMs~~compliance software shall require the user to choose one of the following options:

- New Building
- Addition Alone (modeled as new building but labeled on output) (if~~when~~ ~~C~~compliance software~~ACM~~ is approved for this optional capability)
- Addition Plus Alteration of Existing Building (if~~when~~ ~~C~~compliance software~~ACM~~ is approved for this optional capability)
- Alteration of Existing Building (if~~when~~ ~~C~~compliance software~~ACM~~ is approved for this optional capability)

These compliance options are required even though compliance for existing buildings is an optional capability. Optional capabilities are described in the following chapter of this manual. ~~An~~ Compliance software~~ACM~~ shall not produce compliance reports or operate in a compliance mode when users specify features that require optional modeling capabilities for which the ~~C~~compliance software~~ACM~~ is not approved.

2.1.2 New Building or Addition Alone

~~ACMs~~Compliance software is~~are~~ required to be able to perform compliance on new buildings and additions as if they were new (or newly conditioned), stand-alone, buildings. ~~ACMs~~Compliance software may do this by treating an addition alone as a new building, but an addition modeled in this way shall be reported on all output forms as a **Stand Alone Addition.**

2.1.3 Scope of Compliance Calculations

For each building or separately permitted space, ~~ACMs~~~~C~~compliance software shall also require the user to identify the scope of the compliance submittal from the following list:

- Envelope only
- Mechanical only
- Envelope and Lighting

- Envelope and Mechanical
- Lighting and Mechanical
- Envelope, Lighting and Mechanical

Each of these situations requires specific assumptions, input procedures and reporting requirements. Modeling assumptions are documented in Chapters 2 and 3. Reporting requirements are documented in Chapter 4. *~~ACMs~~Compliance software shall only produce reports specific to the scope of the submittal determined for the run.* For example, ~~Hence~~ an Envelope Only scope run is only allowed to produce ENV forms and PERF forms that are designated *Envelope Only*.

The information about installed service water heating system(s) is included in the mechanical compliance submittal forms. ~~ACMs~~Compliance software shall calculate the energy use for both the proposed system(s) and the reference system(s) [TDV energy budget] and provide the results on the PERF forms. The energy budget is calculated in accordance with Section 2.6 (Service Water Heating--Required capabilities) of this manual. If the energy used by the proposed water heating system(s) is less than the energy budget, the credit may be traded off for other building features. Alternatively, for high-rise residential buildings, users may show service water heating compliance by meeting the prescriptive requirements of ~~Section~~§ 151(f)(8)~~ of the Standards~~. When the compliance for the service water heating is shown prescriptively, tradeoff between the service water heating and other building components is not allowed.

When a building has a mixed scope of compliance, such as a speculative building where all the envelope is being permitted but the core includes lighting as well as portions of the envelope, **two** (or more) compliance runs shall be performed and forms from different runs shall be submitted for the appropriate spaces. The scope of submittal for the building core compliance run will be **Envelope & Lighting** and the scope of submittal for the compliance run for the remainder of the building will be **Envelope Only**.

The following modeling rules apply for when the scope of the compliance calculations do not include one of the following: the building envelope, the lighting system or the mechanical system.

Cases	*Modeling Rules for Proposed Design*	*Modeling Rules for Standard Design (All):*
No Envelope Compliance Mechanical Only Lighting and Mechanical	The envelope shall be modeled according to the as-built drawings and specifications of the building or as it occurs in the previously-approved compliance documentation of the building. All envelope features and inputs required for ~~ACMs~~compliance software by this manual shall be entered.	The envelope shall be identical to the proposed design.
	Note: A partial permit application involving no envelope compliance creates an exceptional condition. This requires either a copy of the previous envelope compliance approval or an equivalent demonstration by the applicant (to the satisfaction of the local enforcement agency) that the building is conditioned and an occupancy permit has previously been issued by the local enforcement agency. The exceptional condition list shall indicate the presence of an existing or previously-approved envelope documentation and a form shall be produced to document the existing envelope. ~~No~~ Compliance software shall not produce envelope (ENV) compliance forms ~~may be output as part of the compliance output~~ when the user selects this option.	

No Mechanical Compliance Envelope Only Envelope and Lighting	~~ACMs~~Compliance software shall model default heating and cooling systems according to the rules in Section 2.5.3.9~~2.5.3.9~~ (Modeling Default Heating and Cooling Systems). ~~ACMs~~Compliance software may not allow the entry of an HVAC system and shall automatically model the default system. Economizer controls will be modeled as indicated in the Standard Design Assumptions for Air Economizers based on system total (sensible + latent) cooling capacity.	The mechanical systems shall be identical to the proposed design.
No Lighting Compliance Envelope Only Mechanical Only Envelope and Mechanical	Previously-approved lighting plans with approved lighting compliance forms may be entered as Tailored Lighting at the approved lighting power levels shown in the construction and previously-approved compliance documents and installed as approved. The exceptional conditions list on the PERF-1 form shall indicate that previously-approved lighting plans and compliance forms shall be resubmitted with the application. In the absence of approved lighting plans and lighting compliance forms, the ~~ACM~~compliance software shall model the lighting system according to Section 2.4.2.2~~1~~ (Lighting) using the rules for Lighting compliance not performed.	With previously approved lighting plans, the lighting levels for each space shall be equal to the approved design. No lighting (LTG) compliance forms may be output with the compliance output. The local enforcement agency should verify that the lighting has already been approved and installed or, if recently designed and approved, should verify the independent lighting approval. In the absence of approved lighting plans and lighting compliance forms, the ~~ACM~~compliance software shall model the lighting system according to Section 2.4.2.2~~1~~ (Lighting) using the rules for Lighting compliance not performed.

2.1.4 Climate Zones

The program shall account for variations in energy use due to the effects of the sixteen (16) California climate zones and local weather data. Climate information for compliance simulations shall use one of sixteen (16) data sets described in Reference ~~ACMJoint Appendix IIStandards~~ Joint Appendix JA2~~.~~, ~~However, the data may be~~ adjusted to local conditions by methods described in Reference ~~ACM Joint Appendix IIStandards~~ Joint Appendix JA2. Copies of these 842~~560~~ local weather data sets are available from the Commission. The same weather data shall be used for the standard and proposed designs. The ~~ACM~~compliance software shall accept input for latitude, longitude and elevation for the local condition. The candidate ~~ACM~~compliance software shall use a full 8760-hour year of data, since TDV multipliers are applied for each hour.

2.1.5 Reference Year

The reference year determines the day (Monday, Tuesday, etc.) for the first day in the weather file which in turn determines the weather days for which holidays and weekends occur. Nonresidential ~~ACMs~~compliance software shall use the Reference Year as specified in Reference ~~Joint Appendix IIStandards~~ Joint Appendix JA2.

2.1.6 Time Dependent Valuation

The candidate ~~ACM~~compliance software shall calculate the hourly energy use for both the standard design and the proposed design by applying a TDV factor for each hour of the reference year. TDV factors have been

established by the CEC for residential and nonresidential occupancies, for each of the sixteen climate zones, and for each fuel (electricity, natural gas, and propane). The procedures for Time Dependent Valuation of energy are documented in Reference ~~ACM Joint Appendix III~~~~Standards~~ Joint Appendix JA3.

2.1.7 Reference Method Comparison Tests

A specific set of reference method comparison tests are described in Chapter 5. These tests verify that the differences between the reference method's compliance margins and ~~an~~the ~~ACM~~compliance software's compliance margins meet specific criteria. The criteria shall be met for every test. The criteria are designed to ensure that the proposed compliance software produces compliance margin results within fifteen percent (15%) of the compliance margin determined by ~~minimize the possibility that an approved ACM will "pass" a building when~~ the reference method except when the compliance margin is small ~~would not~~. The test criteria ~~do not prevent an ACM from being conservative with regard to compliance but~~ requires the ~~ACM~~compliance software to produce results similar to those of the Commission's reference program and method. In addition to meeting the test criteria, the ~~ACM~~compliance software shall conform to all of the input and output requirements described in this manual.

~~An ACMs~~Compliance software may use the reference method procedures directly or the ~~ACM~~compliance software may use other procedures that approximate the reference method results with sufficient accuracy to meet the criteria described in Chapter 5. In particular, when this manual uses the term "~~ACMs~~~~C~~compliance software shall model" it means that ~~ACMs~~compliance software shall be able ***to quantitatively approximate*** the changes in energy use due to particular envelope, lighting, or HVAC features of a building in such a way that satisfies the test criteria in Chapter 5 for each and every test. Compliance software~~ACM~~ estimates for lighting and receptacle energy use shall be within a few percent of the reference method results, while a larger tolerance is acceptable for HVAC and building envelope measures.

2.2 Compliance Documentation

Compliance documentation includes the forms, reports and other information that is submitted to the building department with an application for a building permit. The purpose of the compliance documentation is to enable the plans examiner to verify that the building design complies with the Standards and to enable the field inspector to readily identify building features that are required for compliance.

~~ACMs~~Compliance software must automatically produce the CEC standard reports which are an essential part of the compliance documentation. The standard reports are highly restricted in quantity and format. All non-default inputs shall be reported on the appropriate report. Exceptional user entries outside of "normal" range shall be printed and shall be clearly flagged in the compliance documentation for the attention of the plan checker and field inspector. Exceptional user entries include process loads, tailored ventilation, and tailored lighting and modifications to certain default values. When the user enters such exceptional input in compliance calculations, the ~~ACM~~compliance software shall automatically print the forms containing such user inputs. Exceptional conditions shall be indicated on the PERF-1 form. The exceptional conditions section shall be prominent on the compliance documentation and shall be included even if no exceptional conditions are reported.

The ~~ACM~~compliance software shall automatically determine the forms to be printed and the total number of pages (T) required to print those forms and shall print exactly that number of pages and all ~~ACM~~compliance software-determined forms. This determination shall be made based on the user's description of the scope of compliance, the building characteristics, and the user's selection of a compliance run. ~~ACMs~~Compliance software may not allow the user to select specific forms to be printed in a compliance run (as distinguished from a diagnostic run where specific reports may be requested). Each page (N) of the required output shall indicate Page N of T in the page header, the unique compliance run code, and the time of the compliance run. The PERF-1 shall list or indicate all of the forms required for a valid submittal, including those required to be done by hand.

~~An ACMs~~Compliance software shall produce the compliance documentation (in a format approved by the Commission) only when a modeled building design complies with the Standards. Reports not directly related to compliance and not required to be reported in this manual shall not be included in the compliance

documentation. Too much or too little information obstructs enforcement. Secondary or irrelevant information may confuse the enforcement agency or waste time. On the other hand, a lack of relevant information may lead to enforcement errors. ~~or encourage cheating.~~ To be approved for compliance use, ~~an ACM~~compliance software cannot allow the user to directly select the compliance forms to be printed. ~~Each~~All ~~ACM~~compliance software shall determine the compliance output based on the user's input description of the building and the type of compliance run for the building. ~~ACMs~~Compliance software may produce additional reports which are not part of the compliance documentation, but these reports should be formatted to make it clear to the plans examiner and the field inspector that the reports are not part of the compliance documentation.

The standard reports are intended to be as similar as possible to the compliance forms used in the prescriptive compliance approach so that those who are familiar with the prescriptive forms will more easily be able to find information on performance approach reports. To allow the optional capabilities of Partial Compliance, Alterations, or automatic modeling of Additions Modeled with the Existing Building, there are distinct additional forms describing existing building components and systems that shall be printed separately than the forms describing the altered or new building components and systems and shall have **all** text in lowercase type.

The first pages (signature pages) of the prescriptive ENV-1, LTG-1, and MECH-1 certificates of compliance are consolidated on the first page of the PERF-1 form. The PERF-1 is the Certificate of Compliance for the performance approach and all three parts of the PERF-1 form (at least three pages) shall be included as part of the plans. Typically the pages of these forms are adhered to a plan sheet and submitted with the plans. These forms are considered to be an integral part of the plans and are to be recorded in exactly the same manner as a set of plans and retained for the same period of time as official records of the plans.

~~An ACM~~Compliance software shall not print compliance documentation when a proposed building design does not comply with the Standards, i.e. when a proposed building design modeled by ~~an~~ approved ~~ACM~~compliance software in accordance with the reference procedure has an estimated TDV energy that exceeds the TDV energy budget, compliance forms shall not be printed, displayed on screen, or written on disk. ~~An ACM~~Compliance software may produce diagnostic reports for buildings that do not comply. These diagnostic reports shall be formatted in a manner significantly different from the compliance documentation, and may include information to help the energy analyst identify measures to bring the building into compliance, including the TDV energy use components of the proposed design and the standard design. Non complying reports shall not report run codes, simulation times, or total page counts, approved form headers, header information or include any formatting features used for compliance documentation. Producing noncompliance reports that resemble compliance documentation is sufficient grounds for rejection of the ~~C~~compliance software~~ACM~~.

~~ACMs~~Compliance software shall interlock program input and compliance output so that the two are always consistent. Any alterations in the user input shall result in a new run time, run code and completely new set of compliance documentation for the type of compliance selected.

User inputs shall appear on the ~~ACM~~compliance software ~~compliance~~ documentation but the reporting of prescribed input assumptions is usually unnecessary since ~~ACMs~~compliance software are required to automatically use these inputs. Compliance documentation shall only include the prescribed inputs or assumptions that are required by the building official to verify compliance. When inputs with standard defaults are modified by the user, the modified value shall be distinctly identified (flagged) in the compliance documentation to alert the local enforcement agency of an exceptional condition for compliance. This enables the code official to verify that the alternate value is acceptable for compliance, is consistent with the plans and specifications, and is verifiable in the field.

To accommodate the optional capabilities of partial compliance, alterations, and additions, ~~ACMs~~compliance software shall report all new or altered user-entered building components and descriptive information completely in **BOLD UPPERCASE** type. ~~ACMs~~Compliance software with the capabilities for partial compliance, automatic modeling of additions with the existing building or modeling alterations in an existing building shall report all information on existing, previously-approved building components that are not altered in non-bold lowercase type. For partial compliance the ~~ACM~~compliance software shall produce the special EXISTING-ENV forms for the existing envelope. Partial compliance applicants with building envelopes approved within the previous two years shall supply envelope compliance information along with the EXISTING-ENV forms. This is to insure that the local enforcement agency can verify that the existing envelope complies and to distinguish these modeled components (same for both standard design and proposed design) from those that are new or have been altered.

The required reports shown in this section should be formatted to fit an 8 ½ x 11 in. page.

2.2.1 Certificate of Compliance Form(s)

(PERF-1, ENV-1, EXISTING-ENV, LTG-1, EXISTING-LTG, MECH-1, and EXISTING-MECH)

The first standard report that shall be produced by all ~~ACMs~~compliance software is the Certificate of Compliance which is divided into four sections: the Performance Summary (PERF-1 forms), Envelope (ENV-1 form), lighting (LTG-1 form) and mechanical (MECH-1 forms). The Certificate of Compliance is required by Title 24~~10~~,Part 1), ~~Section~~§ 103(a) 2.A, B and C of the California Code of Regulations. For the performance approach all signature blocks for the Certificate of Compliance are combined onto the first page of the PERF-1 compliance output form. Normally all of these signature blocks shall be signed by the responsible designers. However, when ~~an ACM~~compliance software is approved for optional partial compliance features and the partial compliance option is being used, only one or two of the signature blocks need be filled in. However, when this occurs the signatures shall be consistent with the type of partial compliance indicated on the Certificate of Compliance - PERF-1 forms and information reported on other output reports. The following are items to be included on the PERF-1 report.

- Date
- Project Name
- Project Address
- Principal Designer Envelope
- Documentation Author
- Building Permit #
- Date of Plans
- Building Conditioned Floor Area
- Climate Zone Building Type
- Phase of Construction
- Statement of Compliance (signature of documentation author)
- Envelope compliance (signature of licensed engineer/architect/contractor, date, license number)
- Lighting compliance (signature of licensed engineer/architect/contractor, date, license number)
- Mechanical compliance (signature of licensed engineer/architect/contractor, date, license number)
- Annual TDV Energy Use Summary
- Building Complies – General Information
- Zone Information
- Exceptional Conditions Compliance Checklist

The PERF-1 shall list all optional capabilities utilized by the user and shall identify the zone(s), system(s) and/or plant(s) to which the optional capabilities apply. The PERF-1 shall also itemize the use of any of the following exceptional building compliance features on the exceptional conditions checklist, identifying the zone(s), systems(s) and or plant(s) to which the feature(s) apply.

The following are examples of building features that should be listed in the exceptional features section.

- Absorptance < 0.40
- Exterior surface emittance different from DOE2.1E defaults
- Any user-defined materials, layers, constructions, assemblies
- Window-wall-ratio > 0.40
- Skylight-roof-ratio > 0.05
- Solar heat gain coefficient (vertical or horizontal) < 0.40
- Fenestration U-factor (vertical or horizontal) < 0.50
- Process fan power
- Process loads
- Tailored lighting input
- Lighting control credits
- Electric resistance heating or reheating
- Hydronic (water source heat pumps)
- Economizer installed on equipment below 75,000 Btu/h and 2500 cfm
- Tailored ventilation

- Use of “Alternate Default Fenestration Thermal Properties” from Reference Nonresidential Appendix NA6
- Use of “Field-Fabricated Fenestration”
- Use of "Industrial/Commercial Work - Precision" occupancy
- When spaces have ceiling heights greater than 15 feet, and with exterior surfaces with a tilt less than 60 degrees (roof), and the program did not model skylights in the standard design of all of these spaces due to the user selected exemption to Standards § 143(c) as described in ~~NACM~~ Section 2.3.5.2, the space number, type of exception and the location on plans or documents shall be indicated.
- Demand control ventilation
- Variable speed drive fans
- Other high efficiency fan drive motors
- Verified sealed ducts in ceiling/roof spaces
- Any optional capabilities used

One consequence of **partial compliance** is that fewer compliance reports are required. The reports, the total number of pages, the run code, and time printed on each of the forms shall be consistent with the fewer number of pages allowed for partial compliance.

The PERF-1 form shall also provide information on the service water heating system, including the system type, the efficiency of the water heating system or its components, pipe insulation specifications, and the fuel source used for service hot water.

When partial compliance is used or an addition is modeled with an existing building and its existing building components, these components shall be flagged on the exceptional conditions checklist on the PERF-1 forms and the relevant EXISTING forms shall be produced.

2.2.2 Supporting Compliance Forms

The second type of standard reports that shall be produced by all ~~ACMs~~compliance software are the supporting compliance forms. These are summarized below.

ENV-1-C	Envelope Compliance Summary – Performance	Opaque Surfaces Fenestration Surfaces – Site Assembled Glazing Exterior Shading
MECH-1-C	Certificate of Compliance Summary – Performance	System Features
MECH-1-C	Mechanical Compliance Summary – Performance	Duct Insulation Pipe Insulation
MECH-2-C	Mechanical Equipment Summary – Performance	Chiller and Tower Summary DHW/Boiler Summary Central System Ratings Central Fan Summary VAV Summary Exhaust Fan Summary
MECH-3-C	Mechanical Compliance Summary – Performance	Mechanical Ventilation
MECH-5-C	Mechanical Distribution Summary – Performance Use Only	Verified Duct Tightness by Installer HERS Rater Compliance Statement

LTG-1-C	Certificate of Compliance – Performance	Installed Lighting Schedule Mandatory Automatic Controls Controls for Credit
~~LTG-1-C~~	~~Portable Lighting Worksheet – Performance~~	~~Portable lighting not shown on plans for office areas > 250 square feet~~ ~~Portable lighting shown on plans for office areas > 250 square feet~~ ~~Plans show portable lighting is not required for office areas > 250 square feet~~ ~~Building Summary – Portable Lighting~~

If the ~~ACM~~compliance software produces additional reports, the pages of these reports shall be tabulated and counted along with the performance forms for total page counts and verification on the PERF-1 form. Applicable reports (forms) shall not be included with compliance calculations unless the report is relevant.

2.3 Building Shell

All ~~ACMs~~compliance software shall accept inputs for each different opaque surface (wall, roof/ceiling, or floor) that separates the conditioned space from the unconditioned air or ~~or semi-conditioned~~ space or the ground, including each demising wall (which consequently includes each party wall). These inputs include construction framing type, orientation and tilt, location and area for each exterior surface. ~~An ACM~~Compliance software shall also allow the user choose construction assemblies from ~~ACM~~compliance software Reference Joint Appendix ~~IV~~JA4 (sometimes abbreviated as JA 4). The choice determines the heat transfer and heat capacity characteristics. The choice also determines the standard design construction. Standard design Roof/Ceiling assemblies shall meet requirements of Standards ~~Section~~§ 118 (e).

There are special rules for relocatable public school buildings (relocatable classrooms) which allow these buildings to be built in arbitrary orientations by modeling their performance in multiple orientations and assuring that compliance is achieved regardless of the orientation for one or more climate zones or for the whole state if all sixteen (16) climate zones are modeled. These rules are found in **Reference Nonresidential Appendix NA4. – Compliance Procedures for Relocatable Public School Buildings.**

U-factors of exterior surfaces shall be obtained from Reference ~~ACM Standards~~ Joint Appendix JA4~~IV~~.

Standard design requirements are labeled as applicable to one of the following options:

- Existing unchanged
- Altered existing
- New
- All

The default condition for these four specified conditions is “All.” ~~An ACM~~Compliance software without the optional capability of analyzing additions or alterations shall classify and report all surfaces as “All.”

All ~~ACMs~~compliance software shall separately report information about demising walls, fenestration in demising walls, exterior walls, and fenestration in exterior walls. Demising walls and demising wall fenestration separate conditioned spaces from enclosed unconditioned spaces. Party walls are always considered to be demising walls when they separate spaces controlled or occupied by different tenants. For the purpose of compliance, the adjacent enclosed spaces not controlled by the tenant of the given space or by a single manager of the building are unconditioned. This assumption means that party walls are treated as demising walls and adjacent tenant spaces are modeled as enclosed unconditioned spaces. To avoid modeling adjacent spaces that are not part of the permit, for purposes of Standards compliance, ~~an ACM~~compliance software shall assume that the demising wall is adiabatic and no heat transfer occurs through it.

Note that the reference computer program may require that the user input conductance values rather than U-factors for exterior envelope components which require stripping off the R-value of the exterior air film

coefficient. Reported U-factors for fenestration (NFRC and Window5 output) use an outside air film coefficient based on a 12.3 miles per hour wind speed, while Reference Joint Appendix JA4 values are based on an outside air film coefficient for 15 miles per hour wind speed.

2.3.1 Spaces

2.3.1.1 Directly Conditioned Space

Directly Conditioned Space ~~I~~is an enclosed space that is provided with wood heating, or is provided with mechanical heating that has a capacity exceeding 10 Btu/(h-ft.²), or is provided with mechanical cooling that has a capacity exceeding 5 Btu/(h-ft.²), unless the space-conditioning system is designed for a process space. (See "Process space")

~~Directly conditioned space is space in a building that is directly heated and/or cooled through the delivery of conditioned air or by radiation from heating elements or interior surfaces.~~

Return Air Plenums

Return air plenums are considered conditioned spaces and shall be modeled as part of the adjacent conditioned space.

2.3.1.2 Indirectly Conditioned Spaces

Indirectly conditioned space is an enclosed space, including, but not limited to, unconditioned volume in atria, that (1) is not directly conditioned space; and (2) either (a) has a thermal transmittance area product (UA) to directly conditioned space exceeding that to the outdoors or to unconditioned space and does not have fixed vents or openings to the outdoors or to unconditioned space, or (b) is a space through which air from directly conditioned spaces is transferred at a rate exceeding three air changes per hour.

~~ACMs~~Compliance software shall allow users to explicitly model all indirectly conditioned spaces. The internal loads (people, lights, equipment, etc.) and schedules for conditioned spaces shall also be used for indirectly conditioned spaces. When indirectly conditioned spaces are explicitly modeled, ~~ACMs~~compliance software shall require the user to identify each zone as either directly or indirectly conditioned.

At the user's choice, ~~ACMs~~compliance software may model indirectly conditioned spaces as part of the directly conditioned space provided that the total volume and area of indirectly conditioned spaces included are each less than 15 percent~~%~~ of the total volume and less than 15 percent~~%~~ of the total conditioned floor area of the total indirectly and directly conditioned volume and floor area. (Refer to Chapter 4 for requirements applying to indirectly conditioned spaces included as directly conditioned spaces.) For the purposes of this manual, indirectly conditioned spaces can either be occupied or unoccupied. ~~Descriptions of each of these space types are provided in Chapter 4.~~ The requirements for each of these three cases are documented below.

Indirectly Conditioned Spaces Included in Directly Conditioned Space

Description	The requirements for modeling indirectly conditioned spaces when they are included in directly conditioned space are as described below.
DOE-2 Command	SPACE
DOE-2 Keyword(s)	AREA VOLUME MULTIPLIER
Input Type	Required
Tradeoffs	Neutral
Modeling Rules for Proposed Design:	Any indirectly conditioned space modeled as part of directly conditioned space shall be input as it occurs in the construction documents, including envelope, occupancy characteristics and lighting levels. Additionally, ~~ACMs~~compliance software shall assume mechanical heating and cooling is provided to the space, using the same system as the actual directly conditioned space.

Modeling Rules for Standard Design (All):	~~ACMs~~Compliance software shall use the same configuration and occupancy characteristics for indirectly conditioned spaces modeled as directly conditioned space as the proposed design. Standard design assumptions for envelope performance, occupancy characteristics, lighting levels, and HVAC system assumptions shall be determined as if the space were directly conditioned.

Indirectly Conditioned Spaces that can be Occupied and Explicitly Modeled

Description:	The requirements for modeling indirectly conditioned spaces that can be occupied and explicitly modeled are as described below.
DOE-2 Command	SPACE
DOE-2 Keyword(s)	AREA VOLUME MULTIPLIER
Input Type	Required
Tradeoffs	Neutral
Modeling Rules for Proposed Design:	For the proposed design ~~ACMs~~compliance software shall receive input for indirectly conditioned spaces for area, configuration, and envelope as each space occurs in the construction documents. All internal loads, receptacle, occupant, process loads shall be determined identically to directly conditioned space. The reference method will treat the space as a conditioned zone [ZONE-TYPE = CONDITIONED] with heating and cooling off [HEATING-SCHEDULE & COOLING-SCHEDULE set to off] and fans on so that mechanical ventilation will be modeled according to Table N2-5 or Table N2-6.
Modeling Rules for Standard Design (All):	~~ACMs~~Compliance software shall use the same configuration and modeling assumptions for indirectly conditioned spaces that can be occupied as the proposed design. Standard design assumptions for envelope performance shall be determined as if the space were directly conditioned. The reference method will not model mechanical heating or cooling for these spaces, however mechanical ventilation (CFM/ft^2) will be modeled according to Table N2-5 or Table N2-5. Lighting levels shall be established identical to directly conditioned space standard design.

Indirectly Conditioned Spaces that cannot be Occupied and Explicitly Modeled

Description	The requirements for modeling indirectly conditioned spaces that cannot be occupied and explicitly modeled are as described below.
DOE-2 Command	SPACE
DOE-2 Keyword(s)	AREA VOLUME MULTIPLIER
Input Type	Prescribed
Tradeoffs	Neutral
Modeling Rules for Proposed Design:	For the proposed design, all ~~ACMs~~compliance software shall receive input for indirectly conditioned spaces for area, configuration, and envelope as each space occurs in the construction documents. All internal loads, ventilation, receptacle, lighting, occupant and process loads shall be zero. No mechanical heating, cooling or ventilation shall be modeled for indirectly conditioned spaces that cannot be occupied. As in the standard design, for these spaces the reference method models lightweight mass by using a light furniture

category of 30 pounds per square foot in DOE 2.1 to generate the lightweight standard weighting factors for these spaces. This lightweight mass is meant to approximate the materials found in conditioned spaces that cannot be occupied.

Modeling Rules for Standard Design (All): ~~ACMs~~Compliance software shall use the same configuration and modeling assumptions for indirectly conditioned spaces that cannot be occupied as the proposed design. Standard design assumptions for envelope performance shall be determined as if the space were directly conditioned.

For these spaces the reference method models lightweight mass by using a light furniture category of 30 pounds per square foot in DOE 2.1 to generate the lightweight standard weighting factors for these spaces. This lightweight mass is meant to approximate the materials found in indirectly conditioned spaces that cannot be occupied.

The reference method will not model mechanical heating, cooling or ventilation for indirectly conditioned spaces that cannot be occupied.

2.3.1.3 Enclosed Unconditioned

Description: ~~ACMs~~Compliance software shall require the user to explicitly model any enclosed unconditioned spaces such as stairways, warehouses, unoccupied adjacent tenant spaces, attached sunspaces, attics and crawl spaces if and only if they are part of the permitted space. ~~ACMs~~Compliance software shall require the user to identify the space as unconditioned and to enter all applicable envelope information, in a similar manner to a conditioned space.

If the enclosed unconditioned space is not a part of the permitted space, ~~ACMs~~compliance software may allow the user to either explicitly model the space or to~~ignore it by~~ model~~ing~~ the space as unconditioned outdoor air with a building shade to represent the bottom side of the roof or ceiling of the enclosed unconditioned space~~partition separating the condition space from the enclosed unconditioned space as an adiabatic demising partition~~ "Party walls" (demising walls separating adjacent tenants) which are insulated with a minimum of R13 between framing members or have a U-factor less than 0.218 may be modeled as adiabatic walls. (see Section 2.3.4.1~~2.5~~).

DOE-2 Command **SPACE**

DOE-2 Keyword(s) AREA
VOLUME
MULTIPLIER

Input Type Required

Tradeoffs Neutral

Modeling Rules for Proposed Design: If enclosed unconditioned spaces are explicitly modeled, ~~ACMs~~compliance software shall model the envelope characteristics of the unconditioned spaces as input by the user, according to the plans and specifications for the building.

All internal gains and operational loads (occupants, water heating, receptacle, lighting and process loads, ventilation) in unconditioned spaces shall be equal to zero. Infiltration shall be equal to 0.038 times the gross~~total~~ wall area exposed to ambient outdoor air.

If enclosed unconditioned spaces are not modeled, the reference program shall model the partitions separating condition spaces from enclosed unconditioned spaces as partitions exposed to the outside but shaded from the sun by modeling the underside of the roof or the ceiling of the enclosed unconditioned space as a building shade. ~~adiabatic demising partitions~~.

Modeling Rules for ~~ACMs~~Compliance software shall model unconditioned spaces exactly the same as the

Standard Design (All):	proposed design. Note that certain unconditioned spaces such as parking garages and unconditioned commercial and industrial storage spaces have lighting power requirements. While the lighting in these spaces are not modeled or included in the energy budgets, the lighting still must meet prescriptive lighting requirements for those spaces.

2.3.1.4 Interior Mass

Description:	The heat capacity of interior walls and furniture.
DOE-2 Command	SPACE
DOE-2 Keyword(s)	FURNITURE-TYPE FURN-WEIGHT FURN-FRACTION FLOOR-WEIGHT
Input Type	Prescribed
Tradeoffs	Neutral
Modeling Rules for Proposed Design:	~~ACMs~~Compliance software shall model interior mass as specified below. The reference method determines lightweight mass exclusively as a function of floor area using DOE-2 furniture inputs as described below. The reference method assumes that lightweight mass is determined from the floor area of the modeled spaces. In the reference method, lightweight mass is modeled through the use of the DOE 2.1 furniture inputs. For directly conditioned spaces and indirectly conditioned spaces that can be occupied the internal mass category is deemed to be [FURNITURE-TYPE = HEAVY]; the average weight of the light mass (furniture and equipment) is assumed to be 80 pounds per square foot [FURN-WEIGHT = 80]; and 85 percent~~%~~ of the floor is covered by lightweight (furniture) mass [FURN-FRACTION = 0.85]. This furniture fraction determines the fraction of solar gains going to the furniture/light mass. Thus the reference method assigns 85 percent~~%~~ of the total solar heat gain normally falling on the floor to the furniture instead. The reference method shall set FLOOR-WEIGHT = 0 to generate custom weighting factors. For indirectly conditioned spaces that cannot be occupied the internal mass category is deemed to be [FURNITURE-TYPE = LIGHT]; the average weight of the light mass (furniture and equipment) is assumed to be 30 pounds per square foot [FURN-WEIGHT = 30]; and 85 percent~~%~~ of the floor is covered by lightweight (furniture) mass [FURN-FRACTION = 0.85]. The reference method shall set FLOOR-WEIGHT = 0 to generate custom weighting factors.
Modeling Rules for Standard Design (All):	The standard design shall model the same lightweight mass as the proposed design and use custom weighting factors for conditioned spaces.

2.3.2 Construction Assemblies

Construction assemblies for exterior partitions for the proposed design shall be selected from Reference ~~ACM~~ Joint Appendix JA4~~IV~~. When a choice is made, all properties of the proposed design construction assembly are set, except as specified in this manual. The materials and layers that make up the construction assemblies are documented in the notes section of each table in Reference ~~ACM~~ Joint Appendix ~~IV~~ JA 4. The choice from Reference ~~ACM~~ Joint Appendix JA 4~~IV~~ also determines the construction of the standard design, according to the mappings in Table N2-1.

Table N2-1 is first organized by type of construction: wall, roof or floor. The second column is the tables from Reference ~~ACM~~ Joint Appendix JA 4~~IV~~ for each type of construction. The third column links the tables to a

class of construction. The final columns show the standard design construction assembly for each climate and building type. ***Selections from Reference ACM Joint Appendix JA4IV are referenced by row and column, similar to a spreadsheet. Letters are used for columns and numbers for rows.***

Ballasted Roofs, Vegetated Roofs, Concrete Pavers, and Other Mass Roofs. An additional layer may be added to the construction assembly specified in Reference Joint Appendix JA4 when thermal mass is used above the roof membrane. This exception is intended to allow ballasted roofs, concrete pavers and other massive elements to be explicitly modeled. To qualify, the weight of the stone ballast, the concrete pavers or other elements must exceed 15 lb/ft². The thickness, heat capacity, conductance and density of the additional mass layer shall be based on the measured physical properties of the material. If the surface properties of the additional mass material have been verified through the Cool Roof Rating Council, the CRRC reported properties may be used for the proposed design, otherwise, the mass layer shall be modeled with an aged reflectance of 0.10 and an emittance of 0.85.

Mass Walls. For mass walls, the process of choosing from Reference ACM Joint Appendix JA4IV is a bit more complicated. The user first chooses the mass layer from either JA Tables IV-124.3.5 or Table IV-134.3.6. After that, the user may select an insulating layer from JA Table IV-144.3.7 for the outside of the mass wall and/or the inside of the mass wall. Up to three choices may be selected from Reference ACM Joint Appendix IV. Joint Appendix JA4. The mass layer selected by the user determines if the wall is medium mass or heavy mass. If the selected mass layer has an HC greater than or equal to 15.0 Btu/ft²-ºF, then the standard design mass layer is considered heavy massIV124.3.5 A8. If the selected mass layer has an HC greater than or equal to 7.0 Btu/ft²-ºF, but less than 15.0 Btu/ft²-ºF, then the standard design mass layer is IV124.3.5 B8considered medium mass. Table N2-1 shows the insulating layer from JA Table IV4-14.3.7 that is added to the inside of the standard design mass layer.

Example

A user chooses the IV114.3.3 E3 steel framed wall construction from Table IV-114.3.3 of Reference ACM Joint Appendix IV JA4 for a nonresidential building located in climate zone 12. Anytime a proposed design construction assembly is selected from JA Table IV4-11.3.3, the class of construction for the proposed design is metal framing. The standard design construction assembly depends on the prescriptive requirement U-factor as shown in is IV114.3.3 A3 from Table N2-1.

Table N2-1 – Standard Design Construction Assemblies From Reference ~~ACM~~ Joint Appendix ~~IV~~ JA4

			Standard Design Construction Assembly	
Type	Reference~~ACM~~ Joint Appendix 4 Table	Class	Criterion U factor	Reference to Joint Appendix ~~Joint Appendix~~ JA4
Roof/ Ceiling	Table 4.2.7 – U-factors for Metal Building Roofs	Metal Building	0.065	4.2.7-A9
	Table 4.2.5 – Metal Framed Rafter Roofs	Wood Framed and Other	0.028	4.2.2-A42
	Table 4.2.6 – Span Deck and Concrete Roofs		0.034	4.2.2-A40
	Table 4.2.1 – Wood Framed Attic Roofs		0.039	4.2.2-A39
	Table 4.2.2 – Wood Framed Rafter Roofs		0.049	4.2.2-A35
	Table 4.2.3 – Structurally Insulated Panels (SIPS) Roof/Ceilings		0.067	4.2.2-A32
	Table 4.2.8 – Insulated Ceiling with Removable Panels		0.075	4.2.2-A31
Walls	Table 4.3.9 – Metal Building Walls	Metal building	0.057	4.3.9-A8
			0.061	4.3.9-A7
			0.113	4.3.9-A5
	Table 4.3.3 – Metal Framed Walls for Nonresidential Construction	Metal framing	0.062	4.3.3-H1,H24
			0.082	4.3.3-G1,G24
			0.098	4.3.3-F1,F24
	Table 4.3.5– Hollow Unit Masonry Walls	Med. mass	0.170	4.3.6-B5; 4.3.13-V15
	Table 4.3.6 – Solid Unit Masonry and Solid Concrete Walls		0.196	4.3.6-B5; 4.3.13-R13
	Table 4.3.13 – Effective R-values for Interior or Exterior Insulation Layers		0.227	4.3.6-B5; 4.3.13-N11
			0.278	4.3.6-B5; 4.3.13-J9
			0.440	4.3.5-C10
	Table 4.3.5 – Properties of Hollow Unit Masonry Walls	Heavy mass	0.160	4.3.5-A10; 4.3.13-V15
	Table 4.3.6 – Properties of Solid Unit Masonry and Solid Concrete Walls		0.184	4.3.5-A10; 4.3.13-R13
			0.211	4.3.5-A10; 4.3.13-N11
	Table 4.3.13 – Effective R-values for Interior or Exterior Insulation Layers		0.253	4.3.5-A10; 4.3.13-J9
			0.253	4.3.5-A10; 4.3.13-J9
			0.650	4.3.5-A9
			0.690	4.3.5-A10
	Table 4.3.1 – Wood Framed Walls	Wood framing and Other	0.042	4.3.1-H3
	Table 4.3.2 –Structurally Insulated Wall Panels (SIPS)		0.059	4.3.1-H1
	Table 4.3.11 – Thermal Properties of Log Home Walls		0.102	4.3.1-A3
	Table 4.3.12 – Thermal and Mass Properties of Straw Bale Walls		0.110	4.3.1-A2
Floors/ Soffit	Table 4.4.6 – Concrete Raised Floors	Medium or heavy mass	0.037	4.4.6-A10
			0.045	4.4.6-A9
			0.058	4.4.6-A8
			0.069	4.4.6-A7
			0.092	4.4.6-A5
			0.269	4.4.6-A1
	Table 4.4.1 – Wood-Framed Floors with a Crawl Space	Other	0.034	4.4.2-A7
	Table 4.4.2 – Wood Framed Floors without a Crawl Space		0.039	4.4.2-A6
	Table 4.4.3 – Wood Foam Panel (SIP) Floors		0.048	4.4.2-A4
	Table 4.4.4 – Metal-Framed Floors with a Crawl Space Table 4.4.5 – Metal-Framed Floors without a Crawl Space		0.071	4.4.2-A2
Doors	Table 4.5.1 – Opaque Doors	Doors-Swinging	0.70	4.5.1-A2
		Doors-Non-Swinging	0.50	4.5.1-A3
			1.45	4.5.1-A1

			Standard Design Construction Assembly			
Type	ACM Joint Appendix IV Table	Class	Climate Zone	Non-residential	High Rise Residential and Hotel/Motel Guestrooms	Relocatable Classrooms
Walls	Table IV.11 – Metal Framed Walls	Metal framing	1, 16	IV11-A3	IV11-A5	IV11-A3
			3-5	IV11-A2	IV11-A2	
			6-9	IV11-A2	IV11-A2	
			2, 10-13	IV11-A3	IV11-A3	
			14, 15	IV11-B5	IV11-A3	
	Table IV.16 – Metal Building Walls	Metal building	1, 16	IV16-A4	IV16-A5	IV16-A5
			3-5	IV16-A3	IV16-A3	
			6-9	IV16-A3	IV16-A3	
			2, 10-13	IV16-A4	IV16-A4	
			14, 15	IV16-A4	IV16-A4	
	Table IV.12 – Hollow Unit Masonry Walls Table IV.13 – Solid Unit Masonry and Solid Concrete Walls Table IV.19 – Effective R-values for Interior or Exterior Insulation Layers	Med. mass (For CZ 1, 16, the mass layer from IV13 is combined with furring from IV19.)	1, 16	IV13-B5 IV19-D9	IV13-B5 IV19-D9	IV13-B5 IV19-D9
			3-5	IV12-C10	IV12-C10	
			6-9	IV12-C10	IV12-C10	
			2, 10-13	IV12-C10	IV12-C10	
			14, 15	IV12-C10	IV12-C10	
	Table IV.12 – Properties of Hollow Unit Masonry Walls Table IV.13 – Properties of Solid Unit Masonry and Solid Concrete Walls Table IV.19 – Effective R-values for Interior or Exterior Insulation Layers	Heavy mass (For CZ 1, 16, the mass layer from IV12 is combined with furring from IV19.)	1, 16	IV12-A9 IV19-A6	IV12-A9 IV19-A6	n.a.
			3-5	IV12-A9	IV12-A9	
			6-9	IV12-A10	IV12-A10	
			2, 10-13	IV12-A9	IV12-A9	
			14, 15	IV12-C9	IV12-C9	
	Table IV.9 – Wood Framed Walls Table IV.10 – Structurally Insulated Wall Panels (SIPS) Table IV.17 – Thermal Properties of Log Home Walls Table IV.18 – Thermal and Mass Properties of Straw Bale Walls	Wood framing and Other	1, 16	IV9-A3	IV9-A5	IV9-A3
			3-5	IV9-A2	IV9-A2	
			6-9	IV9-A2	IV9-A2	
			2, 10-13	IV9-A3	IV9-A3	
			14, 15	IV9-A3	IV9-A3	
Roofs	Table IV.1 – Wood Framed Attic Roofs Table IV.2 – Wood Framed Rafter Roofs Table IV.3 – Structurally Insulated Panels (SIPS) Roof/Ceilings Table IV.5 – Metal Framed Rafter Roofs Table IV.6 – Span Deck and Concrete Roofs Table IV.7 – U-factors for Metal Building Roofs Table IV.8 – Insulated Ceiling with Removable Panels	All	1, 16	IV2-A5	IV2-A9	IV2-A5
			3-5	IV2-A5	IV2-A5	
			6-9	IV2-A2	IV2-A5	
			2, 10-13	IV2-A5	IV2-A9	
			14, 15	IV2-A5	IV2-A9	
Floors	Table IV.25 – Concrete Raised Floors	Medium or heavy mass	1, 16	IV25-A5	IV25-A5	IV21-A4
			3-5	IV25-A3	IV25-A3	
			6-9	IV25-A3	IV25-A3	
			2, 10-13	IV25-A5	IV25-A5	
			14, 15	IV25-A3	IV25-A5	
	Table IV.20 – Wood Framed Floors with a Crawl Space Table IV.21 – Wood Framed Floors without a Crawl Space Table IV.22 – Wood Foam Panel (SIP) Floors Table IV.23 – Metal Framed Floors with a Crawl Space Table IV.24 – Metal Framed Floors without a Crawl Space	Other	1, 16	IV21-A4	IV21-A4	IV21-A4
			3-5	IV21-A2	IV21-A2	
			6-9	IV21-A2	IV21-A2	
			2, 10-13	IV21-A2	IV21-A2	
			14, 15	IV21-A2	IV21-A2	

2.3.2.1 Construction Identifiers

All constructions are selected from JA ~~ACM Joint Appendix IV~~4. Each construction is referenced by the table number and the column and row in the table.

2.3.2.2 Heat Capacity

Description	The ability of a construction assembly to absorb thermal energy. The heat capacity, HC, of an assembly is calculated by using the following equation: Equation N2-1 $$HC = \sum_{i=1}^{n} (\rho_i \times c_i \times t_i)$$ where: n is the total number of layers in the assembly ρ_i is the density of the ith layer C_i is the specific heat of the ith layer t_i is the thickness of the ith layer all in consistent units. HC is not an input to the reference program, nor is it used in the calculations. It is used, however to determine if a wall is medium mass or heavy mass or if a floor is medium or heavy mass. HC is reported in JA ~~ACM Joint Appendix IV~~4 for wall construction assemblies, so it is generally not necessary to use the above equation to calculate HC.
DOE-2 Commands	LAYERS, MATERIAL
DOE-2 Keyword(s)	DENSITY SPECIFIC-HEAT THICKNESS
Input Type	HC is determined by the construction assembly choices for the proposed design. Each mass wall choice from ~~ACM Joint Appendix~~JA ~~IV~~4 has an HC value associated with it.
Tradeoffs	Neutral
Modeling Rules for Proposed Design	The ~~ACM~~compliance software shall determine the overall heat capacity from the users choice of a construction assembly from ~~ACM Joint Appendix~~JA ~~IV~~4.
Modeling Rules for Standard Design (All):	The construction assembly specified in Table N2-1 shall be used for the standard design.

2.3.2.3 Solar Reflectance and Thermal Emittance

Description	The combination of solar reflectance and thermal emittance are the reflective and radiative properties of exterior surfaces. ~~A cool roof, as defined in the Standards,~~ ~~for a low sloped roof, has a minimum initial 3-year-aged solar reflectance of 0.700.55 and minimum initial 3-year-aged emittance of 0.75, but with the performance method any combination of reflectance and emittance is recognized for credit or penalty.~~ ~~for steep-sloped roofsaged solar reflectance of 0.25 and minimum aged thermal~~

~~emittance of 0.75,~~For products rated by the CRRC, the aged reflectance and emittance shall be used. If an asphalt shingles or composition shingles is not rated by the CRRC, the default aged solar reflectance is 0.08. For other roofing products not rated by the CRRC, the default aged solar reflectance shall be 0.10. The default emittance for all materials (for modeling purposes) is 0.85.

If the aged reflectance is not available from the CRRC but the initial reflectance is, then the calculated aged reflectance shall be estimated by Equation N2-2. The aged emittance shall be equal to the initial emittance.

- Absorptance is the fraction of the incident solar radiation absorbed as heat on the construction assembly's opaque exterior surface.
- Reflectance is the fraction of incident solar radiation that is reflected. Reflectance plus absorptance equal one.
- Thermal emittance is the ratio of radiant heat flux emitted by the construction assembly's opaque exterior surface to that emitted by a blackbody at the same temperature, hereafter referred to as "emittance."

DOE-2 Commands and Keywords

CONSTRUCTION ABSORPTANCE ..

EXTERIOR-WALL_OUTSIDE-EMISS ..

Note that absorptance is equal to 1 – reflectance. The reference method accepts absorptance, but not reflectance.

Input Type

Required for roofs. Default for other surfaces.

Tradeoffs

Yes for roofs. No for other surfaces

Modeling Rules for Proposed Design:

The reference method shall use an aged ~~absorptance~~ reflectance value to model the proposed design roof. The compliance software shall use~~d~~ measured aged absorptance for the roofing product if the data is available from CRRC. ~~; otherwise,~~ If no measured data is available for the proposed roof product, an aged reflectance of 0.08 shall be used for asphalt or composite shingles and an aged reflectance of 0.10 shall be used for other roofing surfaces. If the initial reflectance is available from the CRRC, but not the aged reflectance, then the aged reflectance may be estimated T~~t~~~~he ACMcompliance software shall calculate the aged absorptance, α_{aged},~~ from the following equation:

Equation N2-2

$$\rho_{Aged} = 0.06 + 0.70 \times \rho_{Initial}$$

$$\alpha_{Aged} = 1 - \rho_{Aged}$$

~~$\alpha_{aged} = 0.8 + 0.7\ (\alpha_{init} - 0.8)$~~

Where ρ_{Aged} is the aged reflectance and $\sigma_{Initial}$ is the initial reflectance, and α_{Aged} is the aged absorptance, which is an input to DOE-2 and many other simulation engines. ~~where α_{init} is the initial absorptance of the roofing product.~~ The aged emittance shall be equal to the initial emittance.

~~There are two compliance cases, one for nonresidential roofs with low slopes and the second for other nonresidential roofs, high-rise residential and hotel/motel roofs.~~

If values for reflectance or emittance other than the defaults are used, the roofing material shall be rated by the CRRC. If a non-default reflectance is used, then the default emittance may not be used.

~~**Nonresidential low-slope roofs** - continuance continuous variation of absorptance and emittance may be entered if the roofing product is rated by the CRRC and for liquid applied coatings if the requirements in Section 118 (i) 3 are met. The default value for roofs that are not rated by the CRRC or do not meet the requirements of~~

	~~Section 118 (i) 3 is 0.9 initial absorptance and 0.75 emittance for non-metallic surfaces and 0.20 for metallic surfaces, including but not limited to bare metal, galvanized steel and aluminum coating.~~
	~~**Other nonresidential roofs, high-rise residential and hotel/motel roofs** - roofs that meet the requirements of Section 118 (i) 3 qualify for a compliance credit. Qualifying cool roofs shall model an initial absorptance of 0.30. Nonqualifying roofs shall use a default absorptance of 0.7. The default value for roofs that are not rated by the CRRC or do not meet the requirements of Section 118 (i) 3 is 0.75 emittance for non-metallic surfaces and 0.20 for metallic surfaces, including but not limited to bare metal, galvanized steel and aluminum coating.~~
	~~The default values below shall be used for walls and floors and shall be the same as for the standard design.~~
~~Default~~	~~The default initial reflectance is 0.10 for nonresidential buildings with a low-slope roof and 0.30 for other roofs, including all high high-rise residential and hotel/motel guest rooms. The default emittance is 0.75. This default may not be used if a non-default reflectance is used.~~
Modeling Rules for Standard Design (All):	The reference method shall use an aged ~~absorptance~~ reflectance value to model the standard design.
	~~Nonresidential low-sloped roofs – t~~The ~~initial~~ aged roof ~~absorptance~~ reflectance of the standard design shall be equal to ~~0.30 (initial reflectance of 0.70)~~the prescriptive requirements in §143. The emittance in the standard design shall be 0.~~75~~85.
	~~Nonresidential steep-sloped roofs – the initial roof absorptance of the standard design shall be 0.75 for asphalt shingles and 0.60 for all other roofing products.~~
	~~**Other nonresidential roofs, high-rise residential and hotel/motel roofs** - the initial roof absorptance of the standard design shall be 0.70. The emittance in the standard design shall be 0.75.~~
	~~For all other roofs as well as walls and floors~~When there is no prescriptive requirement,~~,~~ the default reflectance and emittance shall be used.

2.3.2.4 Composite Walls

Description

Exterior wall assemblies that consist of more than one class of construction, i.e. any combination of wood framing, steel framing, masonry, and other types of wall construction assemblies. An example of a composite wall made up of a masonry section and a steel-framed section is shown below:

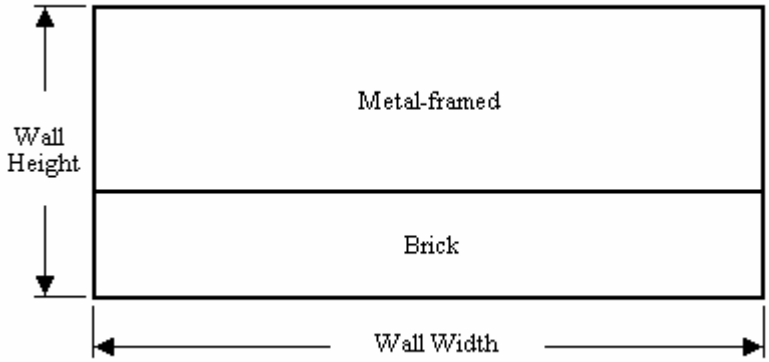

DOE-2 Command	EXTERIOR-WALL
DOE-2 Keyword(s)	LAYERS
Input Type	Required
Tradeoffs	Yes
Modeling Rules for Proposed Design:	The ~~ACM~~compliance software shall model each type of construction in a composite wall shown in the construction documents as described above. The composite wall shall consist of multiple selections from ~~ACM Joint Appendix~~JA ~~IV~~4, with each assigned an area.
Modeling Rules for Standard Design (New & Altered Existing):	Each part of the composite wall has a standard design construction which is defined in Table N2-1.
Modeling Rules for Standard Design (Existing Unchanged):	The standard design shall model each existing composite wall as it occurs in the existing building using the procedure described above. The existing construction assemblies shall be selected from ~~ACM Joint Appendix~~JA ~~IV~~4.

2.3.3 Above-Grade Opaque Envelope

2.3.3.1 Exterior Partitions

Description:	Above-grade exterior partitions that separate conditioned spaces from the ambient air (outdoors), unconditioned attic spaces and crawl spaces, or courtyards. Exterior walls, raised floors, roofs, and ceilings are exterior partitions. The area of exterior partitions is defined by specifying the width of the partition and a height equal to the total height of the floor or by using another acceptable means such as specifying the vertices of a polygon.
DOE-2 Command	EXTERIOR-WALL
DOE-2 Keyword(s)	HEIGHT, WIDTH
Input Type	Required
Tradeoffs	Neutral
Modeling Rules for Proposed Design:	Each exterior partition shall be entered as it occurs in the construction documents.
Modeling Rules for Standard Design (All):	Exterior partitions in the standard design shall be identical to the proposed design.

2.3.3.2 Insulation Above Suspended Ceilings

Description	Section 118(e)3. of the Standard restricts the use of insulation over suspended ceilings. This is permitted only when the unconditioned space above the ceiling is greater than 12 ft and the insulted space shall be smaller than 2,000 ft².
Proposed Design	The proposed design may only use insulation over a suspended ceiling when the space qualifies for the exception to ~~Section~~§ 118(e)3~~ of the Standards~~. The U-factor for the construction shall be selected from Table ~~IV~~4.2.8 from ~~ACM Joint Appendix~~JA ~~IV~~4. Values from this table account for leakage through the suspended ceiling and discontinuity of the insulation.
Standard Design	The standard design roof construction shall be determined from Table N2-1, based

on climate zone and class of construction. .

2.3.3.3 Surface Azimuth and Tilt of Exterior Partitions

Description:	The direction of an outward normal projecting from the partition's exterior surface relative to the true north. Positive azimuth is measured clockwise from the true north. Note: openings (doors and windows) inherit their azimuth and tilt from the parent surface.
DOE-2 Command	EXTERIOR-WALL
DOE-2 Keyword(s)	AZIMUTH TILT
Input Type	Required
Tradeoffs	Neutral
Modeling Rules for Proposed Design:	The azimuth and tilt of each exterior partition shall be input as shown in the construction documents for the building to the nearest whole degree.
Modeling Rules for Standard Design (All):	The azimuth and tilt of exterior partitions in the standard design shall be identical to those in the proposed design.

2.3.4 Interior Surfaces

2.3.4.1 Demising Partitions

Description	A barrier that separates a conditioned space from an enclosed unconditioned space. "Party walls" separating tenants, an opaque partition separating a conditioned space from an unconditioned ~~warehouse~~space, and a glass partition separating a conditioned space from an unconditioned sunspace are examples of demising partitions.
DOE-2 Command	INTERIOR-WALL
DOE-2 Keyword(s)	HEIGHT WIDTH AZIMUTH TILT NEXT-TO
Input Type	Required
Tradeoffs	Neutral
Modeling Rules for Proposed Design:	The proposed design shall model demising partitions insulated with R-13 between framing members (or with a U-factor less than 0.218) which are "party walls" as adiabatic interior partitions. No heat transfer shall occur between the two adjacent spaces in this case. All other demising partitions must be modeled as designed, viz. next to a modeled enclosed unconditioned space or modeled as an exterior partition that is shaded by the ceiling or the under side of the roof of the~~an~~ enclosed unconditioned space [DOE-2 BUILDING-SHADE command] tha~~t~~t is not otherwise modeled. ~~ACMs~~Compliance software shall require the user to input information for each demising partition including orientation and tilt, location, size, shape and construction as they occur in the construction documents. ~~ACMs~~Compliance software shall indicate in the compliance forms that demising partitions are used to separate the conditioned space from the unconditioned space.

	For ~~framed~~ demising partitions in a new construction~~-~~, the compliance forms shall also indicate that R-13~~1~~ insulation shall be installed between framing members or that the U-factor of the demising partition is less than 0.218 for opaque demising walls; that fenestration that is part of a demising partition meets the prescriptive U-factor requirements for fenestration in an exterior wall per ~~Section~~§ 143(a)5.B; that a ceiling assembly that is a demising partition has R-19 insulation installed within the assembly or that the assembly between the ceiling and the unconditioned space has a U-factor of less than 0.113; and that a floor assembly that is a demising partition has an installed insulation R-value of 13~~1~~ or that the floor assembly between the conditioned and the unconditioned space has a U-factor of less than 0.106. Doors (including fenestration that is part of a door) that are demising partitions, have no insulation or U-factor requirements but are modeled as designed.~~.~~
Modeling Rules for Standard Design (All):	The standard design shall model each demising partition with the same thermal characteristics, orientation and tilt, location, size, shape and construction as the proposed design.

2.3.4.2 Interzone Walls

Description:	The reference method shall model heat transfer through interior walls separating directly conditioned zones from other directly and indirectly conditioned zones as air walls. The reference program accounts for the thermal mass of interior walls as described in Section 2.3.1.5.
DOE-2 Command	INTERIOR-WALL
DOE-2 Keyword(s)	WIDTH HEIGHT NEXT-TO
Input Type	Prescribed
Tradeoffs	Neutral
Modeling Rules for Proposed Design	~~ACMs~~Compliance software shall receive inputs for the width and height (or area) of all inter-zone walls as they occur in the construction documents. The reference program shall model inter-zone walls as air walls with zero heat capacity and an overall U-factor of 1.0 Btu/h-ft^2-^{o}F.
Modeling Rules for Standard Design (All):	The reference method models all inter-zone walls as they occur (and as they are modeled) in the proposed design.

2.3.4.3 Interior Floors

Description:	The reference method shall model heat transfer through interior floors separating directly conditioned zones from other directly and indirectly conditioned zones.
DOE-2 Command	INTERIOR-WALL
DOE-2 Keyword(s)	WIDTH HEIGHT NEXT-TO
Input Type	Required
Tradeoffs	Neutral
Modeling Rules for Proposed Design:	~~ACMs~~Compliance software shall receive inputs for all interior floors as they occur in the construction documents.
Modeling Rules for Standard Design (All):	The reference method models all interior as they occur (and as they are modeled) in the proposed design.

2.3.5 Fenestration and Doors

2.3.5.1 Area of Fenestration in Walls & Doors

Description: Fenestration surfaces include all glazing in walls and vertical doors of the building. The following inputs shall be received.

- *Fenestration Dimensions*. For each glazing surface, all ~~ACMs~~compliance software shall receive an input for the glazing area. The reference method uses window width and height. The glazing dimensions are those of the rough-out opening for the window(s) or fenestration product. The area of the fenestration product will be the width times the height. For fenestration products with glazing surfaces on more than a single side such as garden windows, the ~~ACM~~compliance software shall be able to accept entry for the dimensions of each side (glazing plus frame) with conditioned space on one side and unconditioned space on the other.

~~• *Field Fabricated Fenestration*. The area of field-fabricated fenestration cannot exceed 1,000 ft² when the building has more than 10,000 ft² of fenestration; buildings with more than 1,000 ft² do not comply.~~

~~Also the use of less than 10,000 ft² of site-built fenestration in a building with more than 10,000 ft² of fenestration shall be reported in the exceptional conditions checklist.~~

- *Display Perimeter.* In a secondary menu (subordinate to the menu for fenestration area entries), the ~~ACM~~compliance software shall allow the user to specify a value for the length of display perimeter, in feet, for each floor or story of the building. The user entry for Display Perimeter shall have a default value of zero. Note: Any non-zero input for Display Perimeter is an exceptional condition that shall be reported on the PERF-1 exceptional condition list and shall be reported on the ENV forms. The value for Display Perimeter is used as an alternate means of establishing Maximum Wall Fenestration Area in the standard design (~~Title 24~~, §143). Display perimeter is the length of an exterior wall in a B-2 occupancy that immediately abuts a public sidewalk, measured at the sidewalk level for each story that abuts a public sidewalk.

- *Floor Number.* The ~~ACM~~compliance software shall also allow the user to specify the Display Perimeter associated with each floor (story) of the building.

DOE-2 Command	WINDOW
DOE-2 Keyword(s)	WIDTH HEIGHT
Input Type	Required
Tradeoffs	Yes
Modeling Rules for Proposed Design:	~~ACMs~~Compliance software shall receive inputs for the proposed design fenestration width and height as they are documented on the construction documents.
Modeling Rules for Standard Design (New & Altered Existing):	The reference method calculates the maximum allowed fenestration area. This Maximum Wall Fenestration Area is 40 percent~~%~~ of the gross exterior wall area of the building that is conditioned when display perimeter is not specified. Also, the Maximum Wall Fenestration Area of the west-facing wall is 40 percent~~%~~ of the gross exterior west-facing wall area of the building that is conditioned when display perimeter is not specified. If Display Perimeter is specified, the Maximum Wall Fenestration Area is either 40 percent~~%~~ of the gross exterior wall area of the building, or six feet times the Display Perimeter for the building, whichever value is greater. Also, if Display Perimeter is

specified, the Maximum Wall Fenestration Area of the west-facing wall is 40 percent~~%~~ of the gross exterior west-facing wall area of the building, or six feet times the west-facing Display Perimeter for the building, whichever value is greater.

The reference method automatically calculates these two maximum fenestration areas for fenestration in walls and uses the greater of the two for the maximum total glazing area and maximum west facing glazing area of the reference building.

1. When the Window Wall Ratio in the proposed design is < 0.40 or < display perimeter × 6 feet, the standard design shall use the same wall fenestration height and width for each glazing surface of the proposed design exterior wall.
2. When the proposed design area of fenestration in walls and doors is greater than the maximum wall fenestration area described above, ~~ACMs~~compliance software shall adjust the height and width of each glazing surface by multiplying them by a fraction equal to the square root of:

Maximum Allowed Wall Fenestration Area/Total Proposed Fenestration Area.

For the standard design the area of each exterior wall construction shall equal the area of each exterior wall of the proposed design, except when the wall area of the proposed design exceeds the maximum allowable window-to-wall ratio (WWR). There are three cases, when the proposed design glazing exceeds the maximum allowable window-to-wall ratio (WWR), which shall be accounted for:

1. *One Wall Construction*. If the window occurs in a portion of wall where it abuts only one construction, the ~~ACM~~compliance software shall decrease the glazing area to the allowable maximum and increase the area of the wall accordingly.
2. *Multiple Wall Constructions*. If the window occurs in a portion of wall where it abuts more than one construction in a given orientation, the ~~ACM~~compliance software shall increase the area of each adjacent wall construction by the same proportion, as glazing area decreases.
3. *Propose WWR = 1.0*. If the Window-to-Wall Ratio, WWR, for any orientation or exterior surface is 1.0, the ~~ACM~~compliance software shall calculate the area weighted average (AWA) HC for all of the walls of the proposed design to determine an HC for the hypothetical wall. The glazing amount is reduced and a wall is inserted as follows:
   a) AWA HC < 7.0 Btu/ft^2-^{o}F: The standard assembly is a steel-framed, lightweight wall with HC = AWA HC of the proposed walls and with a U-factor matching the requirement listed in Table 143-A, 143-B, or 143-C of the Standards for other walls with HC < 7.0 and the applicable climate zone.
   b) AWA HC ≥7.0 Btu/ft^2-^{o}F: The standard assembly is a homogeneous material with a U-factor matching the applicable value listed in Table 143-A, 143-B, or 143-C of the Standards for the applicable HC range and climate zone and the same HC as the proposed AWA HC.

Modeling Rules for Standard Design (Existing Unchanged): The standard design shall use the same fenestration area as the existing design.

2.3.5.2 Area of Fenestration in Exterior Roofs

Description ~~ACMs~~Compliance software shall model the exposed surface area of fenestration in roofs separating those with transparent and translucent glazing. Such fenestration surfaces include all skylights or windows in the roofs including operable skylights and windows in the roofs of the building.

DOE-2 Command	ROOF
DOE-2 Keyword(s)	WIDTH HEIGHT
Input Type	Required
Tradeoffs	Yes
Modeling Rules for Proposed Design:	~~ACMs~~Compliance software shall receive inputs for width, length and height of each fenestration surface of the proposed design as they are shown in the construction documents. Surface area may also be described as vertices of a polygon.
Modeling Rules for Standard Design (New & Altered Existing):	~~ACMs~~Compliance software shall calculate the maximum and minimum allowed area of fenestration in roofs. This Maximum Roof Fenestration Area is 5 percent~~%~~ of the gross exterior roof area of the entire permitted space or building. When the criteria of Standards § 143(c) apply, the minimum allowed skylight area is 3.3 percent~~%~~ of the greater of the design daylight area or one half of area subject to Standards § 143(c). The compliance software shall also identify areas subject to Standards § 143(c).

Identifying areas subject to Standards § 143(c)

When a proposed space with ceiling heights greater than 15 feet, with exterior surfaces having a tilt angle less than 60 degrees (roofs) and no more than 3 stories above grade, the user shall enter what fraction of the modeled space is exempt from the § 143(c) requirements. If the proposed design has skylights, the user shall also indicate the area of the proposed design daylight area under skylights in this space. When the user enters a value greater than 0 percent~~%~~ for the fraction of the space area exempt to § 143(c), the compliance software shall require that the user indicate at least one of the following exceptions:

1. Designed general lighting is less than 0.5 W/ft^2 (include plan page number showing designed lighting system)
2. Existing walls on plans result in enclosed spaces less than 8,000 ft^2 (include plan page number showing existing walls).
3. Future walls or ceilings on plans result in enclosed spaces less than 8,000 ft^2 or ceiling heights less than 15 feet (include plan page number showing existing walls).
4. Plans or documents show that space is an auditorium, religious building of worship, movie theater, museum, or refrigerated storage (include reference to plans or documents).

Standard design fenestration area in roofs in areas subject to Standards § 143(c).

1. When the Skylight Roof Ratio (SRR) in the proposed design is < 0.05, the standard design shall have a SRR that is the greater of the proposed design or 0.033 times the greater of: a) the design daylit area under skylights or b) one half of the area subject to § 143(c) minus the primary sidelit daylight area having automatic daylighting controls in the space.
2. When the Skylight Roof Ratio in the proposed design is > 0.05, the compliance software shall adjust the dimensions of each roof fenestration of the standard design by multiplying them by a fraction equal to the square root of:

Equation N2-3 $SRR_{standard}/SRR_{proposed}$

Standard design fenestration area in roofs in all other areas (including areas exempt from Standards § 143(c)).

1. When the Skylight Roof Ratio (SRR) in the proposed design is < 0.05, for each roof fenestration, the standard design shall use the same skylight dimensions as the proposed design unless item 2 applies.

   ~~EXCEPTION: When skylights are required by Section 143(c) (low-rise conditioned or unconditioned enclosed spaces that are greater than 258,000 ft^2 1 directly under a roof with ceiling heights greater than 15 ft and have a lighting power density for general lighting equal to or greater than 0.5 W/ft^2) and the SRR in the proposed design is less than the minimum, the standard design shall have a SRR of 0.033 in .033.0% for 0.5 W/ft^2 ≤ LPD < 1.0 W/ft^2, .0333.3% for 1.0 W/ft^2 ≤ LPD < 1.4 W/ft^2, and .0363.6% for LPD ≥ 1.4 W/ft^2 in the greater of the design daylit area or one half of the area of qualifying spaces.~~

2. When the Skylight Roof Ratio in the proposed design is > 0.05, the ~~ACM~~compliance software shall adjust the dimensions of each roof fenestration of the standard design by multiplying them by a fraction equal to the square root of:

   Equation N2-4 $SRR_{standard}/SRR_{proposed}$

Modeling Rules for Standard Design (Existing Unchanged): The standard design shall use the same fenestration area as the existing design.

2.3.5.3 Exterior Doors

Description:	Doors in exterior partitions.
DOE-2 Command	DOOR
DOE-2 Keyword(s)	WIDTH HEIGHT SETBACK MULTIPLIER
Input Type	Required.
Tradeoffs	~~Neutral~~Yes
Modeling Rules for Proposed Design:	Users shall make a selection from ~~ACM~~compliance software ~~Joint Appendix~~JA ~~IV~~4. Other inputs shall include the area of each door and its position in the parent surface. Azimuth and tilt are typically inherited from the parent surface.
Modeling Rules for Standard Design (All):	The reference method shall ~~model the exterior doors in a manner identical to the proposed design.~~use the exterior door assembly from Table N2-1 for the applicable climate zone.

2.3.5.4 Product Identifiers

Description: A unique alphanumeric identifier shall be used for each fenestration product. Separate identifiers shall be used to refer to proposed and standard designs of the same fenestration product.

Each product shall be categorized as a manufactured fenestration product, a site-built fenestration product, or a field-fabricated fenestration.

Any transparent or translucent material plus any sash, frame, mullions, and dividers,

in the envelope of a building, including, but not limited to: windows, sliding glass doors, French doors, skylights, curtain walls, and garden windows.

Windows include not only common windows but also all fenestration products in the walls of the building envelope. Examples of such fenestration products include all windows and glazing materials, glass block walls, translucent panels, and glass doors. Walls are portions of the building envelope with tilts from vertical to less than 30 degrees from vertical.

DOE Keyword: WINDOW

Input Type: Required

Tradeoffs Yes

2.3.5.5 Fenestration Orientation and Tilt

Description: The reference method models the actual azimuth (direction) and surface tilt of windows and skylights (fenestration products) in each wall and roof surface. In the reference method, these window properties are inherited from the parent surface in the reference method.

There are special rules for relocatable public school buildings (relocatable classrooms) which allow these buildings to be built in arbitrary orientations by modeling their performance in multiple orientations and assuring that compliance is achieved regardless of the orientation for one or more climate zones or for the whole state if all sixteen (16) climate zones are modeled. These rules are found in **Reference Nonresidential Appendix NA4. – Compliance Procedures for Relocatable Public School Buildings.**

Modeling Rules for Proposed Design: Azimuth and surface tilt of each glazing surface shall be input as they occur in the construction documents.

Modeling Rules for Standard Design (All): Azimuth and surface tilt of each glazing surface shall be the same as they occur in the proposed design.

~~There are special rules for relocatable public school buildings (relocatable classrooms) which allow these buildings to be built in arbitrary orientations by modeling their performance in multiple orientations and assuring that compliance is achieved regardless of the orientation for one or more climate zones or for the whole state if all sixteen (16) climate zones are modeled. These rules are found in **Reference Appendix NA4. – Compliance Procedures for Relocatable Public School Buildings.**~~

2.3.5.6 Fenestration Thermal Properties

Description: ~~ACMs~~Compliance software shall model the overall U-factor and Solar Heat Gain Coefficient (SHGC) for each fenestration assembly, including inside and outside air films and effects of framing, spacers and other non-glass materials as applied to the full rough-out fenestration area. ~~ACMs~~Compliance software shall require the user to indicate the source of the U-factor and SHGC: Acceptable sources are NFRC label values, default values from Standards Tables 116-A and 116-B, or alternate default values from the ~~ACM~~compliance software Appendix.

In this s~~S~~ection the word “Window” is used to refer to fenestration in a surface that has a tilt greater than 60 degrees from the horizontal.

DOE-2 Command WINDOW

DOE-2 Keyword(s) FRAME-CONDUCTANCE

	FRAME-WIDTH FRAME-ABS
Input Type	Required
Tradeoffs	Yes
Modeling Rules for Proposed Design:	The reference program uses a FRAME ABSORPTANCE of 0.70. ~~ACMs~~Compliance software shall receive inputs for or determine the default for the U-factor and SHGC of each fenestration product of system in the proposed design. NFRC label values are allowed for all fenestration categories. If the user selects "NFRC labeled values" for a particular fenestration product, the ~~ACM~~compliance software shall receive values for the U-factor and SHGC. Use the following rules: • For manufactured vertical fenestration, the default values shall be the U-factor and SHGC listed in Table~~s~~ 116-A and Table 116-B of the Standard. • For site-built fenestration products in buildings with 10,000 square feet or more of site-built fenestration, the default values shall be the U-factor and SHGC listed in Tables 116-A and 116-B of the Standards. • For site-built fenestration products in buildings with less than 10,000 square feet of site-built fenestration, the default values shall be the alternate default U-factor and SHGC using the defaults and calculations specified in ~~ACMcompliance software~~ Reference Appendix ~~NI~~ NA6 or the U-factor and SHGC listed in Table 116-A and Table 116-B of the Standards. • For skylights, the default values shall be the alternate default U-factor and SHGC using default calculations specified in Reference Nonresidential Appendix NA6~~I~~ or the U-factor and SHGC listed in Table 116-A and Table 116-B of the Standards. • For field-fabricated fenestration, the default values shall be the U-factor and SHGC listed in Tables 116-A and 116-B~~-~~of the Standards. The use of this field fabricated fenestration or field-fabricated exterior doors is an exceptional condition that shall be reported in the exceptional conditions checklist.
Modeling Rules for Standard Design (New & Altered Existing):	~~ACMs~~Compliance software shall use the appropriate "Maximum U-factor " and RSHG or SHGC for the window as appropriate from Tables 143-A, 143-B, and 143-C of the Standards including the framing according to the occupancy type and the climate zone. The standard design uses a FRAME ABSORPTANCE of 0.70.
Modeling Rules for Standard Design (Existing Unchanged):	The standard design shall use the existing design's U-factor and SHGC or RSHG as appropriate including the framing. The standard design uses a FRAME ABSORPTANCE of 0.70.

2.3.5.7 Solar Heat Gain Coefficient of Fenestration in Walls & Doors

Description:	The reference method models the solar heat gain coefficient -(SHGC) of glass including the framing, dividers, and mullions. The shading effects of dirt, dust, and degradation are purposely neglected and an ~~ACM~~compliance software user may not adjust solar heat gain coefficients because of these effects. The ~~ACM~~compliance software user's manual shall reflect these restrictions on user entries. If the user has specified Display Perimeter, ~~ACMs~~compliance software may also receive an input in a subordinate menu for the Relative Solar Heat Gain (RSHG) requirement except for cases where local building codes prohibit or limit the use of overhangs or exterior shading devices. The use of this RSHG exception input is itself an exceptional condition that shall be reported in the exceptional conditions

checklist of the PERF-1 form.

DOE Keyword: SHADING-COEF

Input Type: Required

Tradeoffs: Yes

Modeling Rules for Proposed Design: Fenestration solar heat gain coefficient (SHGC) for each fenestration surface shall be input as it occurs in the construction documents for the building. ~~ACMs~~Compliance software that requires inputting shading coefficient (SC) instead of SHGC shall calculate the fenestration's shading coefficient using the following formula:

Equation N2-5 $SC_{fenestration} = SHGC/0.87$

Note: This equation is taken from ***Blueprint #57***, dated Fall 1996. Since both SC for nonresidential buildings and SHGC apply to the entire rough-out opening, the adjustment for framing and divider has been removed.

Modeling Rules for Standard Design (New & Altered Existing): ~~ACMs~~Compliance software shall use the appropriate maximum RSHG values from Tables 143-A, 143-B, and 143-C of the Standards according to occupancy, climate zone, window wall ratio and orientation as the standard design solar heat gain coefficient. The maximum RSHG is different for north-oriented glass; for the purposes of establishing standard design solar heat gain coefficient, north glass is glass in walls facing from 45° west (not inclusive) to 45° east (inclusive) of true north.

If the user has claimed the RSHG exception for a section of display perimeter, the standard design uses the maximum RSHG for north glass found in Tables 143-A, 143-B, and 143-C of the Standards for any fenestration surface utilizing this exception.

Modeling Rules for Standard Design (Existing Unchanged): The standard design shall use the same RSHG value as the existing design including the framing.

2.3.5.8 Solar Heat Gain Coefficient of Fenestration in Roofs

Description: The reference method models the solar heat gain coefficient of the fenestration including the glass and framing. The shading effects of dirt, dust, and degradation are purposely neglected and ~~an~~ ~~ACM~~compliance software users may not adjust solar heat gain coefficients because of these effects. The ~~ACM~~compliance software user's manual shall reflect these restrictions on user entries.

DOE-2 Command

DOE-2 Keyword(s) SHADING-COEF

Input Type Required

Tradeoffs Yes

Modeling Rules for Proposed Design: Fenestration solar heat gain coefficient for each fenestration surface in the roof(s) of a building or permitted space shall be input as it occurs in the construction documents for the building or permitted space. ~~ACMs~~Compliance software that require inputting shading coefficient (SC) instead of SHGC shall calculate the fenestration's shading coefficient using the following formula:

Equation N2-6 $SC_{fenestration} = SHGC/0.87$

	Note: This equation is taken from ***Blueprint #57***, dated Fall 1996. Since both SC for nonresidential buildings and SHGC apply to the entire rough-out opening, the adjustment for framing and divider has been removed.
Modeling Rules for Standard Design (New & Altered Existing):	~~ACMs~~Compliance software shall use the appropriate maximum solar heat gain coefficient from Tables 143-A, 143-B, and 143-C of the Standards according to the occupancy type, the climate zone and the fenestration type.
Modeling Rules for Standard Design (Existing Unchanged):	The standard design shall use the same SHGC value as the existing design.

2.3.5.9 Overhangs

Description:	~~ACMs~~Compliance software shall be capable of modeling overhangs over windows and shall have the following inputs: • *Overhang position.* The distance from the edge of the window to the edge of the overhang. • *Height above window.* The distance from the top of the window to the overhang. • *Overhang Width*. The width of the overhang parallel to the plane of the window. • *Overhang extension*. The distance the overhang extends past the edge of the window jams. • *Overhang Angle.* The angle between the plane of window and the plane of the overhang.
DOE-2 Command	WINDOW
DOE-2 Keyword(s)	OVERHANG-A OVERHANG-B OVERHANG-W OVERHANG-D OVERHANG-ANGLE
Input Type	Default
Tradeoffs	Yes
Modeling Rules for Proposed Design:	Overhangs shall be modeled in the proposed design for each window as they are shown in the construction documents.
Default:	No overhang.
Modeling Rules for Standard Design (New & Altered Existing):	No overhang.
Modeling Rules for Standard Design (Existing Unchanged):	Overhangs shall be modeled in the same manner as they occur in the existing design.

2.3.5.10 Vertical Shading Fins

Description:	~~ACMs~~Compliance software shall be capable of modeling vertical fins. Vertical fins

shall affect the solar gain of fenestration products only. ~~ACMs~~Compliance software shall have the following inputs:

- *Wall/window.* Input shall require the user to specify the wall/or window with which the fin is associated.
- *Horizontal position.* The distance from the outside edge of the window to the fin.
- *Vertical position.* The distance from the top edge of the fin to the top edge of the window.
- *Fin height*. The vertical height of the fin.
- *Depth.* The depth of the fin, measured perpendicularly from the wall to the outside edge of the fin.

DOE-2 Command	WINDOW
DOE-2 Keyword(s)	LEFT-FIN-A RIGHT-FIN-A LEFT-FIN-B RIGHT-FIN-B LEFT-FIN-H RIGHT-FIN-H LEFT-FIN-D RIGHT-FIN-D
Input Type	Default
Tradeoffs	Yes, except for pre-existing vertical fins in existing buildings.
Modeling Rules for Proposed Design:	Vertical fins shall be modeled in the proposed design for each window as they are shown in the construction documents.
Default	No vertical fins
Modeling Rules for Standard Design (New & Altered Existing):	No vertical fins
Modeling Rules for Standard Design (Existing Unchanged):	Vertical fins shall be modeled in the same manner as they occur in the existing design.

2.3.5.11 Exterior Fenestration Shading Devices

Description:	~~ACMs~~Compliance software shall be able to model exterior fenestration shading devices which affect the solar gain of glazing surfaces. Overhangs and side fins are not considered exterior devices in this context. .
DOE-2 Command	N/A
DOE-2 Keyword(s)	N/A
Input Type	Default
Tradeoffs	Yes
Modeling Rules for Proposed Design:	Exterior fenestration shading devices shall be modeled in the proposed design for each window as they are shown in the construction documents. Note: Applications of Exterior Shading Devices are very limited; see Section 4.3.4.9 for restrictions on modeling Exterior Shading Devices.
Default:	No exterior fenestration shading devices
Modeling Rules for	Exterior fenestration shading devices shall not be modeled in the standard design;

Standard Design (New & Altered Existing):	however, the fenestration shall meet the prescriptive requirements for U-factor and solar heat gain coefficient.
Modeling Rules for Standard Design (Existing Unchanged):	Exterior fenestration shading devices shall be modeled in the same manner as they occur in the existing design.

2.3.5.12 Window Management

Description:	The reference method simulates window management/interior shading devices in the following manner. ~~ACMs~~Compliance software may either use this method or a method yielding equivalent results. Window solar heat gain coefficient is multiplied by a multiplier which gives the effective solar heat gain coefficient for combined shading device and window when the shading device covers the window.
DOE-2 Command	
DOE-2 Keyword(s)	SHADING-SCHEDULE. Use the DOE-2 window management algorithms and close the default drapes or internal shade when solar gain through the window exceeds 30 Btu/h-ft². Otherwise open the default internal shade.
Input Type	Prescribed
Tradeoffs	Neutral
Default	The default internal shade shall reduce solar gains by 20 percent~~%~~ (a multiplier of 0.80) when the drapes are closed.
Modeling Rules for Proposed Design:	The proposed design shall use the default shade and window management.
Modeling Rules for Standard Design (All):	The standard design models the same window management as the proposed design.

2.3.6 Concrete Slab-On-Grade Floors, Perimeters, and Basement Floors~~Below-Grade Envelope~~

Description: Concrete Slab-On-Grade floors separate a conditioned space from the adjacent soil or bedrock. Concrete slab-on-grade floors shall be modeled as an UNDERGROUND-WALL in the reference method.

Slab losses and gains shall be calculated separately for interior (core) areas and perimeter areas as follows:

Equation N2-7 $$Q_{slab} = Q_{per} + Q_{core}$$

Equation N2-8 $$Q_{per} = \sum A_{per}\left[\alpha_1\left(T_{in} - T_{bi-weekly}\right) + \alpha_2\left(T_{in} - T_{monthly}\right) + \alpha_3\left(T_{in} - T_{annual}\right)\right]$$

Equation N2-9 $$Q_{core} = \sum A_{core}\left[\alpha_4\left(T_{in} - T_{monthly}\right) + \alpha_5\left(T_{in} - T_{annual}\right)\right]$$

where

Q_{slab} Hourly heat gain or loss from the total slab area (Btu/h)

Q_{per} = Hourly heat gain or loss from the perimeter slab area (Btu/h)

Q_{core} = Hourly heat gain or loss from the interior slab area (Btu/h)

A_{per} = Perimeter slab area (ft²) 2 ft x Perimeter Length (ft)

A_{core} = Interior slab area (ft²) - total slab area less A_{per}

T_{in} = Interior space temperature (F)

$T_{bi\text{-}weekly}$ = Average outdoor temperature for the last two weeks (F)

$T_{monthly}$ = Average monthly outdoor air temperature (F)

T_{annual} = Average annual outdoor air temperature (F)

$\alpha_{1\text{-}5}$ = Coefficients from Table N2-2 for Slab-on-Grade Floors, Table N2-3 for Concrete Basement Walls, and Table N2-4 for Concrete Basement Floors~~XX~~ (Btu/h-F-ft²)

α_1 = PERIM-COND-WEEK (Btu/h-F-ft²)

α_2 = PERIM-COND-MONTH (Btu/h-F-ft²)

α_3 = PERIM-COND-YEAR (Btu/h-F-ft²)

α_4 = CORE-COND-MONTH (Btu/h-F-ft²)

α_5 = CORE-COND-YEAR (Btu/h-F-ft²)

Basement floors shall be modeled as an UNDERGROUND-WALL with no perimeter (PERIMETER = 0).and the area of the core equal to the total area of the UNDERGROUND-WALL but with different coefficients for α_4 and α_5 as specified in Table N2-4 – Basement Floor Coefficients. Basement walls are modeled with the total area of the UNDERGROUND-WALL as the perimeter area but with coefficients α_1, α_1, and α_3 taken from

Table N2-3 – Basement Wall Coefficients.

DOE-2 Command	UNDERGROUND-WALL
DOE-2 Keyword(s)	WIDTH HEIGHT PERIMETER-EXPOSED (This is actually A_{per} above) PERIMETER-COND-WEEK PERIMETER-COND-MONTH PERIMETER-COND-YEAR CORE-COND-MONTH CORE-COND-YEAR
Input Type	Prescribed
Tradeoffs	Neutral
Modeling Rules for Proposed Design:	Compliance software shall model underground floor constructions and areas input as they occur in the construction documents but with an additional one foot layer of earth below the slab. The slab perimeter and floor conductivity coefficients shall be taken from Table N2-2 – Slab-on-Grade Floor Coefficients below or by interpolation from the table.

Table N2-2 – Slab-on-Grade Floor Coefficients

	Perimeter	Interior	Core
Insulation			

Surface Condition	Depth	Insulation R-value	Bi-Weekly α_1	Monthly α_2	Annual α_3	Monthly α_4	Annual α_5
Carpeted	n.a.	R-0	0.0852	0.0551	0.0028	0.0446	0.0238
	24 in.	R-5	0.0291	0.0685	0.0100	0.0348	0.0283
		R-10	0.0193	0.0688	0.0126	0.0326	0.0293
	48 in.	R-5	0.0224	0.0629	0.0141	0.0306	0.0299
		R-10	0.0193	0.0688	0.0126	0.0267	0.0316
Exposed	n.a.	R-0	0.1692	0.0737	0.0014	0.0521	0.0258
	24 in.	R-5	0.0600	0.0909	0.0086	0.0404	0.0295
		R-10	0.0422	0.0912	0.0115	0.0380	0.0304
	48 in.	R-5	0.0479	0.0817	0.0139	0.0351	0.0314
		R-10	0.0258	0.0774	0.0194	0.0308	0.0330

Table N2-3 – Basement Wall Coefficients

Surface Condition	Insulation Depth	Insulation R-value	Basement Walls Bi-Weekly α_1	Monthly α_2	Annual α_3
Exterior Insulation	n.a.	R-0	0.1551	0.0599	0.0034
	4 ft.	R-5	0.0746	0.0606	0.0025
		R-10	0.0593	0.0599	0.0028
	8 ft.	R-5	0.0543	0.0417	0.0020
		R-10	0.0332	0.0328	0.0026
Interior Insulation	8 ft.	R-10	0.0338	0.0233	-0.0013

Table N2-4 – Basement Floor Coefficients

Surface Condition	Insulation Depth	Insulation R-value	Monthly α_4	Annual α_5
	n.a.	R-0	0.0233	0.0419
	24 in.	R-5	0.0243	0.0419
		R-10	0.0241	0.0419
	48 in.	R-5	0.0265	0.0431
		R-10	0.0272	0.0435

The reference method shall assume soil layers to have a thermal conductivity of 1.0 Btu-ft/h-ft^2-ºF and a density of 115 lb/ft³. Concrete is assumed to have a thermal conductivity of 0.7576 Btu-ft/h-ft^2-ºF and a density of 140 lb/ft³. The reference method assumes that both soil and concrete have a specific heat of 0.20 Btu/lb- ºF.

Modeling Rules for Standard Design: The standard design shall use the same underground floor constructions, areas, and position as the proposed design but shall assume a carpeted slab with no perimeter insulation.

~~2.3.6.1 Underground Walls~~

~~Description:~~	~~Underground walls separate a conditioned space from the adjacent soil or bedrock.~~
~~DOE-2 Command~~	~~UNDERGROUND-WALL~~
~~DOE-2 Keyword(s)~~	~~WIDTH~~ ~~HEIGHT~~
~~Input Type~~	~~Prescribed~~
~~Tradeoffs~~	~~Neutral~~
~~Modeling Rules for Proposed Design:~~	~~The reference method shall model below grade walls using UNDERGROUND-WALL Keyword using their actual construction, input by the user, with an additional one-foot layer of earth coupled to the ground temperature. ACMsCompliance software shall set the effective U-factor of underground walls to zero~~ ~~The reference method shall assume soil layers to have a thermal conductivity of 0.50 Btu-ft/h-ft^2-°F and a density of 85 lb/ft³. Concrete is assumed to have a thermal conductivity of 0.758 Btu-ft/h-ft^2-°F and a density of 140 lb/ft³. The reference method assumes that both soil and concrete have a specific heat of 0.20 Btu/lb-°F.~~ ~~If the proposed design has an insulated slab, then heat loss from the slab shall be approximated by entering an exterior wall and assigning an area to the wall equal to the exposed perimeter of the slab times one foot of height. The U-factor of the exterior wall shall be the F-factor for the proposed design selected from JA ACM Joint Appendix 4IV, Table IV-264.4.7 and modeled according to the rules with Table IV-264.4.7.~~
~~Modeling Rules for Standard Design (All):~~	~~ACMsCompliance software shall model underground walls in the standard design exactly the same as they are modeled in the proposed design, including construction, area and position.~~ ~~The slab perimeter (the area of the hypothetical exterior wall described for the proposed design) shall be the same for the standard design and the U-factor of this hypothetical exterior wall shall be the F-factor from IV26-A1 and modeled according to the rules with Table IV-264.4.7.~~

~~*2.3.6.2Underground Concrete Floors*~~

~~Description:~~	~~Underground concrete floors separate a conditioned space from the adjacent soil or bedrock.~~
~~DOE-2 Command~~	~~UNDERGROUND-FLOOR~~
~~DOE-2 Keyword(s)~~	~~WIDTH~~ ~~HEIGHT~~
~~Input Type~~	~~Prescribed~~
~~Tradeoffs~~	~~Neutral~~
~~Modeling Rules for Proposed Design:~~	~~ACMsCompliance software shall model underground floor constructions and areas input as they occur in the construction documents along with a one-foot layer of soil beneath the floor. ACMsCompliance software shall set the effective U-factor of underground floors to zero.~~ ~~The reference method shall assume soil layers to have a thermal conductivity of 0.50 Btu-ft/h-ft^2-°F and a density of 85 lb/ft³. Concrete is assumed to have a thermal conductivity of 0.7576 Btu-ft/h-ft^2-°F and a density of 140 lb/ft³. The reference method assumes that both soil and concrete have a specific heat of 0.20 Btu/lb-°F.~~
~~Modeling Rules for~~	~~The standard design shall use the same underground floor constructions, areas,~~

~~Standard Design (All):~~	~~and position as the proposed design.~~

2.4 Building Occupancy

~~The user of an ACM~~Compliance software users shall be able to select an occupancy type from certain allowed tables. ~~ACMs~~Compliance software that does not have separate selection lists for ventilation occupancy assumptions and all other occupancy assumptions shall allow the user to select from the occupancies listed in Table N2-5 and Table N2-6 or to select from an officially approved alternative sub-occupancy list that maps into those occupancies. ~~ACMs~~Compliance software that has~~ve~~ separate occupancy selection lists for ventilation assumptions and other assumptions shall use the occupancy selections given in tables in the Building Energy Efficiency Standards or approved alternative lists of occupancies. The occupancies listed in Table 121-A in the Standards~~-~~shall be used for ventilation occupancy selections and the occupancies listed in Table 146-G~~D~~ in the ~~Standards~~ shall be used for selecting the remaining occupancy assumptions. Alternatively specific occupancy selection lists approved by the Commission that map into Tables 121-A or 146- G~~D~~ may be used.

A building consists of one or more occupancy types. ~~ACMs~~Compliance software cannot combine different occupancy types. Table N2-5 and Table N2-6 describe all of the schedules and full load assumptions for occupants, lighting, infiltration, receptacle loads and ventilation. Full load assumptions are used for both the proposed design and the standard design compliance simulations.

2.4.1 Assignment

2.4.1.1 Occupancy Types

Description	A modeled building shall have at least one defined occupancy type. A default occupancy of "all other" may be used to fulfill this requirement. ~~Alternative Calculation Methods (ACMs~~Compliance software~~)~~ shall model the following occupancy types for buildings and spaces when lighting compliance is not performed or lighting plans are submitted for the entire building. Occupancies that are considered as subcategories of these occupancies are listed in Table N2-5 of this manual. ~~ACMs~~Compliance software with default occupancies shall use the "all other" occupancy category as a default. When lighting plans are submitted for portions or for the entire building or when lighting compliance is not performed, ~~Alternative Calculation Methods (ACMs~~Compliance software~~)~~ shall model the following area occupancy types for spaces within an HVAC zone. These area occupancy types are listed in Table N2-6 of this manual. (Note: Some additional area occupancies are listed as subcategories of the area occupancies listed in Table N2-6): Please note that this list is comprehensive given the categories "all other." Occupancies and area occupancies other than those listed herein cannot be approximated by another occupancy or area occupancy unless that substitution has been approved by the Executive Director of the Commission in writing. The selection lists accommodate unknown or miscellaneous unlisted occupancies. Any space that will be leased to an unknown tenant is considered “tenant lease space.” Other occupancies unknown to the applicant and any known occupancy not reasonably similar (as determined by the local building official) to an occupancy specified on a Commission-approved list is considered "all others."
DOE-2 Command	SPACE
DOE-2 Keyword(s)	SPACE-CONDITIONS
Input Type	Required

Tradeoffs: Neutral

Modeling Rules for Proposed Design: For all directly or indirectly conditioned spaces, c~~ACMsC~~ompliance software shall require users to specify the occupancy of the building or the area occupancy of each zone being modeled. For unconditioned spaces, the user must enter "Unconditioned" as the occupancy and ventilation, internal loads and uses are set to zero. ~~ACMs~~Compliance software shall require the user to identify if lighting compliance is performed (lighting plans are included or have already been submitted). ~~ACMs~~Compliance software shall determine the occupancy type as follows:

- *Lighting compliance not performed*. The ~~ACM~~compliance software shall require the user to select the occupancy type(s) for the building from the occupancies reported in Table N2-5 or Table 146-F~~G~~ of the Standards. The ~~ACM~~compliance software shall use the occupancy assumptions of this Table for compliance simulations.
- *Lighting compliance performed*. The ~~ACM~~compliance software shall require the user to select the occupancy type(s) for each zone from the occupancies reported in Table N2-6 of the ACM or Table 146-F~~G~~ of the Standards. The ~~ACM~~compliance software shall use the area occupancy assumptions from Table N2-6 for compliance simulations.

Tailored lighting and tailored ventilation are permitted as exceptional condition modifications to these default assumptions, but shall be reported on the PERF-1 as exceptional conditions and on other applicable compliance forms. Only the general lighting may be traded off in the performance method. Use-it-or-lose-it lighting power allowances may not be traded off; these shall be the same for both the standard design and the proposed design.

~~ACMs~~Compliance software shall use the same default assumptions, listed in Table N2-5 through ~~Table N2-10~~ Table N2-12 of this manual including schedules, occupant densities, outside air ventilation rates, lighting loads, receptacle loads and service water heating loads. ~~ACMs~~Compliance software may have a separate occupancy list for ventilation versus other assumptions subject to the constraint that occupancy schedule types cannot be mixed. Users shall select occupancy of a given space based upon the proposed or anticipated occupancy not on the amount of lighting desired. ~~ACM~~Compliance software input shall emphasize occupancy choices and similarities not lighting choices. ~~ACMs~~Compliance software may not report the occupancy default lighting watts per square foot on the screen when the user is selecting occupancies for a space. After the occupancies are selected by the user, the lighting determined from the user's occupancy selection may appear on a separate entry screen as a default entry in the lighting power input if the user has not already entered it.

Modeling Rules for Standard Design (All): ~~ACMs~~Compliance software shall model the same occupancy type(s) and area occupancy type(s) as the proposed building. ~~ACMs~~Compliance software shall use the same default assumptions found in Table N2-5 through Table N2-12~~Table N2-10~~. Tailored lighting and tailored ventilation are permitted as a modification to these default assumptions but shall be reported on the PERF-1 exceptional condition list. Refer to sections for Lighting, Ventilation, and Process Loads for respective requirements for each of these adjustments.

2.4.1.2 Mixed Area Occupancies

Description: ~~ACMs~~Compliance software shall allow the user to select mixed as the occupancy type when selecting an area occupancy for each zone. This option shall only be available if lighting compliance is performed (lighting plans are (or have been) submitted for the zone). Refer to Chapter 4 for restrictions on selecting mixed as

	the area occupancy type.
DOE-2 Command	SPACE
DOE-2 Keyword(s)	SPACE-CONDITIONS
Input Type	Required
Tradeoffs	Neutral
Modeling Rules for Proposed Design:	The ~~ACM~~compliance software shall request input for the following: 1. Total area of the space 2. Area and occupancy type of different area occupancy types; however, the subareas may also be optionally entered as percentages of the total area The ~~ACM~~compliance software shall automatically calculate the sum of the areas for the different occupancies: • If the sum of the different areas (or percentages) is greater than the input total area of the space, the ~~ACM~~compliance software shall require corrected input or proportionately scale down the entries so that the sum is the total area. • If the sum of the different occupancies is less than the input total area, the ~~ACM~~compliance software shall assign the occupancy other to the area needed to equal the input total area. The ~~ACM~~compliance software shall assign occupancy-determined assumptions for occupant densities, outside air ventilation rates, lighting loads, receptacle loads and service water heating loads by calculating the area-weighted average for each of these inputs, using the areas input by the user. Refer to sections for Lighting, Ventilation, and Process Loads for respective requirements for each of these adjustments. ~~ACMs~~Compliance software shall not allow input of sub area occupancies with different schedules (e.g., Nonresidential, Residential~~, or Retail~~) within the same mixed area occupancy. However, "Corridor, Restroom, and Support Area" spaces may be part of a mixed occupancy and use the schedule of the other occupancies making up the mixed occupancy zone rather than the default schedule assigned to this occupancy type.
Modeling Rules for Standard Design (All):	~~ACMs~~Compliance software shall use the same default assumptions calculated for the proposed design, as well as any tailored lighting, tailored ventilation, and receptacle loads input for the proposed design.

Table N2-5 – Occupancy Assumptions When Lighting Plans are Submitted for the Entire Building or When Lighting Compliance is not Performed

Occupancy Type	#people per 1000 ft$^{2(1)}$	Sensible Heat per person$^{(2)}$	Latent Heat per person$^{(2)}$	Recept acle Load W/ft$^{2(3)}$	Hot Water Btu/h per person	Lighting W/ft$^{2(4)}$	Ventilation CFM/ ft$^{2(5)}$
Auditoriums (Note 8)	143	245	105	1.0	60	1.5	1.07
Classroom Building	40	246	171	1.0	108	1.1	0.32
Commercial and Industrial Building	5	268	403	0.43	108	0.6	0.15
Convention Centers (Note 8)	136	245	112	0.96	57	~~1.3~~1.2 ~~2~~	1.02
Financial Institutions	10	250	250	1.5	120	1.1	0.15
General Commercial and Industrial Work Buildings, High Bay	7	375	625	1.0	120	~~1.1~~1.0~~3~~	0.15
General Commercial and Industrial Work Buildings, Low Bay	7	375	625	1.0	120	1.0	0.15
Grocery Stores (Note 8)	29	252	225	0.91	113	1.5	0.22
~~Hotel(6)~~	~~20~~	~~250~~	~~200~~	~~0.5~~	~~60~~	~~1.4~~	~~0.15~~
~~Industrial and Commercial Storage Buildings~~	~~5~~	~~268~~	~~403~~	~~0.43~~	~~108~~	~~0.7~~0.6	~~0.15~~
Library	10	250	250	1.5	120	1.3	0.15
Medical Buildings and Clinics	10	250	213	1.18	110	1.1	0.15
Office Buildings	10	250	206	1.34	106	~~1.1~~0.8~~4~~5	0.15
Religious Facilities (Note 8)	136	245	112	0.96	57	1.6	1.03
Restaurants (Note 8)	45	274	334	0.79	366	1.2	0.38
~~Retail and Wholesale Stores (Note 8)~~	~~29~~	~~252~~	~~224~~	~~0.94~~	~~116~~	~~1.5~~	~~0.22~~
Schools (Note 8)	40	246	171	1.0	108	1.0~~2~~	0.32
Theaters (Note 8)	130	268	403	0.54	60	1.3	0.98
All Others	10	250	200	1.0	120	0.6	0.15

(1) Most occupancy values are based on an assumed mix of sub-occupancies within the area. These values were based on one half the maximum occupant load for exiting purposes in the CBC. Full value for design conditions. Full year operational schedules reduce these values by up to 50% for compliance simulations and full year test simulations.

(2) From Table 1, p. 29.4, ASHRAE 2001Handbook of Fundamentals

(3) From Lawrence Berkeley Laboratory study. This value is fixed and includes all equipment that are plugged into receptacle outlets.

(4) From Table 146-E~~B~~ of the Standards for the applicable occupancy. The lighting power density of the standard building, for areas where no lighting plans or specifications are submitted for permit and the occupancy of the building is not known, is 1.2 watts per square foot.

(5) Developed from ~~Section~~§ 121 and Table 121-A of the Standards

(6) Hotel uses values for Hotel Function Area from Table N2-6.

(7) For retail and wholesale stores, the complete building method may only be used when the sales area is 70% or greater of the building area.

(8) For these occupancies, when the proposed design is required to have demand control ventilation by ~~Section~~§ 121 (c) 3 the ventilation rate is the minimum that would occur at any time during occupied hours. Additional ventilation would be provided through demand controlled ventilation to maintain CO_2 levels according to ~~Section~~§ 121 of the Standards.

Table N2-6 – Area Occupancy Assumptions When Lighting Plans are Submitted for Portions or for the Entire Building or When Lighting Compliance is not Performed

Sub-Occupancy Type [1]	People per 1000 ft^2 [2]	Sensible heat per person [3]	Latent heat per person [3]	Recept Load W/ft^2 [4]	Hot water Btu/hper person	Lighting W/ft^2 [5]	Ventilation CFM/ ft^2 [6]
Auditorium (Note 10)	143	245	105	1.0	60	1.5	1.07
Auto Repair	10	275	475	1.0	120	~~1.1~~0.95	1.50
Bar, Cocktail Lounge and Casino (Note 10)	67	275	275	1.0	120	1.1	0.50
~~Barber and~~ Beauty Salon ~~Shop~~	10	250	200	2.0	120	1.~~0~~7	0.40
Classrooms, Lecture, Training, Vocational Room	50	245	155	1.0	120	1.2	0.38
Civic Meeting Place~~Space~~ (Note 10)	25	250	200	1.5	120	1.3	0.19
Commercial and Industrial Storage (conditioned or unconditioned)	3	275	475	0.2	120	0.6	0.15
Commercial and Industrial Storage (refrigerated)	1	275	475	0.2	0	0.7	0.15
Convention, Conference, Multi-purpose and Meeting Centers (Note 10)	67	245	155	1.0	60	1.4	0.50
Corridors, Restrooms, Stairs, and Support Areas	10	250	250	0.2	0	0.6	0.15
Dining (Note 10)	67	275	275	0.5	385	1.1	0.50
Electrical, Mechanical Room	3	250	250	0.2	0	0.7	0.15
Exercise, Center, Gymnasium	20	255	875	0.5	120	1.0	0.15
Exhibit, Museum (Note 10)	67	250	250	1.5	60	2.0	0.50
Financial Transaction	10	250	250	1.5	120	1.2	0.15
Dry Cleaning (Coin Operated)	10	250	250	3.0	120	0.9	0.30
Dry Cleaning (Full Service Commercial)	10	250	250	3.0	120	0.9	0.45
General Commercial and Industrial Work, High Bay	10	275	475	1.0	120	1. ~~1~~0	0.15
General Commercial and Industrial Work, Low Bay	10	275	475	1.0	120	~~1~~0.9~~0~~	0.15
General Commercial and Industrial Work, Precision	10	250	200	1.0	120	1. ~~3~~2	0.15
Grocery Sales (Note 10)	33	250	200	1.0	120	1.6	0.25
High-Rise Residential Living Spaces [9]	5	245	155	0.5	(7)	0.5	0.15
Hotel Function Area (Note 10)	67	250	200	0.5	60	1.5	0.50
Hotel/Motel Guest Room [9]	5	245	155	0.5	2800	0.5	0.15
Housing, Public and Common Areas;~~,~~ Multi-family, Dormitory	10	250	250	0.5	120	1.0	0.15
Housing, Public and Common Areas;~~,~~ ~~Dormitory~~, Senior Housing	10	250	250	0.5	120	1.5	0.15
Kitchen, Food Preparation	5	275	475	1.5	385	1.6	0.15
Laboratory, Scientific	10	250	200	1.0	120	1.4	0.38
Laundry	10	250	250	3.0	385	0.9	0.15
Library, Reading Areas	20	250	200	1.5	120	1.2	0.15
Library, Stacks	10	250	200	1.5	120	1.5	0.15
Lobby, Hotel	10	250	250	0.5	120	1.1	0.15
Lobby, Main Entry	10	250	250	0.5	60	1.5	0.15
Locker/Dressing Room	20	255	475	0.5	385	0.8	0.15
Lounge, Recreation (Note 10)	67	275	275	1.0	60	1.1	0.50
Malls and Atria (Note 10)	33	250	250	0.5	120	1.2	0.25
Medical and Clinical Care	10	250	200	1.5	160	1.2	0.15
Office (Greater than 250 square feet in floor area)	10	250	200	1.5	120	0.9~~1.2~~	0.15
Office (250 square feet in floor area or less)	10	250	200	1.5	120	1.1	0.15

Police Station and Fire Station	10	250	200	1.5	120	0.9	0.15
Religious Worship (Note 10)	143	245	105	0.5	60	1.5	1.07
Retail Merchandise Sales, Wholesale Showroom (Note 10)	33	250	200	1.0	120	1.~~7~~6	0.25
Tenant Lease Space	10	250	200	1.5	120	1.0	0.15
Theater, Motion Picture) (Note 10)	143	245	105	0.5	60	0.9	1.07
Theater, Performance) (Note 10)	143	245	105	0.5	60	1.4	1.07
Transportation Function (Note 10)	33	250	250	0.5	120	1.2	0.25
Waiting Area	10	250	250	0.5	120	1.1	0.15
All Others	10	250	200	1.0	120	0.6	0.15

(1) Subcategories of these sub-occupancies are described in Section 2.4.1.1 (Occupancy Types) of this manual.

(2) Values based on one half the maximum occupant load for exiting purposes in the CBC. Full value for design conditions. Full year operational schedules reduce these values by up to 50% for compliance simulations and full year test simulations.

(3) From Table 1, p. 29.4, ASHRAE 2001 Handbook of Fundamentals.

(4) From Lawrence Berkeley Laboratory study. This value is fixed and includes all equipment that are plugged into receptacle outlets.

(5) From Table 146-F~~C~~ of the Standards for the applicable occupancy. ~~ACMs~~Compliance software shall use this value for the standard building design when lighting compliance is performed for the zone or area in question.

(6) Developed from ~~Section~~§ 121 and Table 121-A of the Standards.

(7) Refer to residential water heating method.

(8) The use of this occupancy category is an exceptional condition that shall appear on the exceptional conditions checklist and thus requires special justification and documentation and independent verification by the local enforcement agency.

(9) For hotel/motel guest rooms and high-rise residential living spaces all these values are fixed and are the same for both the proposed design and the standard design. ~~ACMs~~Compliance software shall ignore user inputs that modify these assumptions for these two occupancies. Spaces in high-rise residential buildings other than living spaces, shall use the values for Housing, Public and Common Areas (either multi-family or senior housing).

(10) For these occupancies, when the proposed design is required to have demand control ventilation by ~~Section~~§ 121 (c) 3 the ventilation rate is the minimum that would occur at any time during occupied hours. Additional ventilation would be provided through demand controlled ventilation to maintain CO_2 levels according to ~~Section~~§ 121~~ of the Standards~~.

2.4.1.3 Occupant Loads

Description:	Based on the occupancy or area occupancy type(s) input by the user, ~~ACMs~~compliance software shall determine the correct occupant density and sensible and latent heat gain per occupant.
DOE-2 Command	SPACE
DOE-2 Keyword(s)	PEOPLE-SCHEDULE AREA/PERSON PEOPLE-HG-SENS PEOPLE-HG-LAT
Input Type	Prescribed
Tradeoffs	Neutral
Modeling Rules for Proposed Design:	The ~~ACM~~compliance software shall determine the correct occupant load and sensible and latent heat gain per occupant from Table N2-5 or Table N2-6.
Modeling Rules for Standard Design (All):	The standard design shall use the same occupant density and sensible and latent heat gain per occupant as the proposed design.

2.4.1.4 Receptacle Loads

Description:	Based on the occupancy or area occupancy type(s) input by the user, ~~ACMs~~compliance software shall determine the correct receptacle load for each

	occupancy type. The receptacle load includes all equipment that are plugged into receptacle outlets. For an office occupancy the receptacle load includes all plugged-in office equipment including computer CPUs, computer monitors, workstations, and printers.
DOE-2 Command	SPACE
DOE-2 Keyword(s)	EQUIPMENT-W/SQFT EQUIP-SCHEDULE
Input Type	Prescribed
Tradeoffs	Neutral
Modeling Rules for Proposed Design:	The ~~ACM~~compliance software shall determine the correct receptacle load from Table N2-5 or Table N2-6.
Modeling Rules for Standard Design (All):	The standard design shall use the receptacle load of the proposed design.

2.4.1.5 Process Loads

Description:	Process load is the internal energy of a building resulting from an activity or treatment not related to the space conditioning, lighting, service water heating, or ventilating of a building as it relates to human occupancy. Process load may include sensible and/or latent components. ~~ACMs~~Compliance software shall model and simulate process loads only if the amount of the process energy and the location and type of process equipment are specified in the construction documents. This~~ese~~ information shall correspond to specific special equipment shown on the building plans and detailed in the specifications. The ~~ACM~~compliance software Compliance Documentation shall inform the user that the ~~ACM~~compliance software will output process loads including the types of process equipment and locations on the compliance forms. ~~ACMs~~Compliance software shall use the Equipment Schedules from Table N2-8 through Table N2-12 ~~Tables N2-4, N2-5, N2-6, N2-7, or N2-8~~ for the operation of process equipment based on the occupancy type selected by the user.
DOE-2 Command	SPACE
DOE-2 Keyword(s)	SOURCE-TYPE SOURCE-BTU/HR SOURCE-SENSIBLE SOURCE-LATENT
Input Type	Default
Tradeoffs	Neutral
Modeling Rules for Proposed Design:	~~ACMs~~Compliance software shall receive input for Sensible and/or Latent Process Load for each zone in the proposed design. The process load input shall include the amount of the process load (W/ft^2), the type of process equipment, and the HVAC zone where the process equipment is located. The modeled information shall be consistent with the plans and specifications of the building.
Default:	No Process Loads
Modeling Rules for Standard Design (All):	The standard design shall use the same process loads for each zone as the proposed design.

2.4.1.6 Infiltration

Description:	~~ACMs~~Compliance software shall model infiltration of outdoor air through exterior surfaces.
DOE-2 Command	SPACE
DOE-2 Keyword(s)	INF-SCHEDULE INF-METHOD AIR-CHANGES/HR
Input Type	Prescribed
Tradeoffs	Neutral
Modeling Rules for Proposed Design:	Infiltration shall either be modeled as "ON" or "OFF", for each zone, according to the following: • "OFF" if fans are ON and zone supply air quantity (including transfer air) is greater than zone exhaust air quantity. • "ON" if fans are OFF. When infiltration is "ON", the reference method calculates the infiltration rate as 0.038 cfm per square foot of gross exterior partition (walls and windows) area for the zone.
Modeling Rules for Standard Design (All):	~~ACMs~~Compliance software shall model infiltration for the standard design exactly the same as the proposed design.

2.4.2 Lighting Power

2.4.2.1 Outdoor Lighting

~~With the 2005 Standards,~~ O~~o~~utdoor lighting ~~is regulated and the~~ requirements are contained in ~~Section~~§ 147~~ of the Standards~~. Outdoor lighting shall not be considered in performance calculations. There are no tradeoffs between outdoor lighting and interior lighting, HVAC or water heating energy. ~~ACMs~~Compliance software shall not include outdoor lighting in the TDV energy budget or the TDV energy for the proposed design.

2.4.2.2 Indoor~~terior~~ Lighting

Description	Compliance software ~~ACMs~~ shall model lighting for each space. Lighting loads shall be included as a component of internal heating loads. Computer software ~~ACMs~~ shall allocate 100 percent~~%~~ of the lighting heat to the space in which the lights occur for both controlled and uncontrolled lighting. ~~ACMsCompliance software shall model lighting for each space. Lighting loads shall be included as a component of internal heating loads. ACMsCompliance software shall allocate 100% of the lighting heat to the space in which the lights occur.~~ ~~ACMs~~Compliance software shall receive an input to indicate one of the following conditions for the building: 1. *Lighting compliance not performed.* When the user indicates with the required ~~ACM~~compliance software input that no lighting compliance will be performed, the ~~ACM~~compliance software shall require the user to select and input the occupancy type(s) of the building from Table N2-5 or Table N2-6. The ~~ACM~~compliance software shall determine the lighting power levels based on the selected occupancy type(s). ~~An ACM~~Compliance software shall not allow the user to input any lighting power densities for the building. **NOTE:** ~~ACMs~~Compliance software may use Table N2-5 even if the building has

multiple occupancies.

2. *Lighting compliance performed.* When the user indicates with that lighting compliance will be performed and lighting plans will be submitted for the entire building (excluding the residential units of high-rise residential buildings and hotel/motel guest rooms), the ~~ACM~~compliance software shall require the user to select and input the occupancy type(s) from Table N2-5 or Table N2-6 and enter the proposed interior lighting equipment or interior lighting power density (LPD) for each space that is modeled. Proposed design use-it-or-loose-it lighting power shall be entered separately from the general lighting. However, if lighting plans will be submitted only for portions of the building, the ~~ACM~~compliance software shall require the user to select and input the occupancy type(s) from Table N2-6 and enter the actual lighting levels for portions of the building with lighting plans.

~~ACMs~~Compliance software shall allow the user to input a Tailored Lighting Input, lighting control credits ~~and the fraction of light heat rejected to indirectly conditioned spaces~~ for each zone.

The tailored lighting method is intended to accommodate special lighting applications.~~,~~ Complete lighting plans and space plans shall be developed to support the special needs triggering the tailored method. Prescriptive c~~C~~ompliance forms for the tailored method shall be developed and these shall be verified by the plans examiner.

If the tailored lighting method is used, the ~~ACM~~compliance software shall make an entry in the special features section on the compliance forms that the tailored lighting method has been used in compliance and that all necessary prescriptive tailored lighting forms and worksheets documenting the lighting and its justification shall be provided as part of the compliance documentation and be approved independently.

With the tailored method, the use-it-or-lose-it lighting power shall be entered into the ~~ACM~~compliance software separately from the general lighting. No tradeoffs are allowed for the use-it-or-lose-it lighting power.

If a value is input for lighting control credits, the ~~ACM~~compliance software shall output on the compliance documentation that lighting control credits have been used in compliance.

When lighting control credits are used, the following lighting power must be entered for each space:

1. Uncontrolled lighting power
2. Controlled lighting power for each different control type

The default uncontrolled schedule as given in Table N2-8 through Table N2-12 for the space shall be assigned to the uncontrolled lighting wattage for the space.

The savings from most of the lighting controls are based on alternative lighting schedules with lower lighting percentage fractions to account for lights being turned off or dimmed. There are four control types that do not use different schedules to calculate control savings: 1) automatic multi-level daylighting controls for lighting in skylit daylight areas, 2) automatic multi-level daylighting controls for lighting in sidelit daylight areas, 3) manual dimming controls and 4) demand responsive dimming controls. All of these controls except the skylit daylighting controls (sidelit daylighting controls, manual dimming and demand responsive dimming) are modeled by having their control power reduced by the Power Adjustment Factor (PAF) as calculated in Table 146-C. The skylit daylighting controls are modeled using the daylighting algorithms in the DOE-2 DAYLIGHTING command described

later in this section.

Note that the reduced lighting energy consumption from sidelit and skylit automatic multi-level daylighting controls are calculated even when they are a mandatory requirement (i.e. when the primary sidelit or skylit daylight area is greater than 2,500 ft²). The standard design will also have these controls.

A lighting schedule associated with the control type as given in Table N2-8 through Table N2-12 shall be assigned to the controlled lighting wattage for each type of control in the space. There can be more than one type of control type qualifying for credit and thus more than one controlled wattage in the space.

The current reference program DOE-2.1E has a maximum two lighting schedules per space that are allocated to separate lighting wattage amounts. These two lighting circuit are:

1) Task Lighting - the lighting power allocated to the TASK-LIGHTING keyword and associated TASK-LIGHT-SCH and

2) Ambient Lighting - the lighting power allocated to the LIGHTING keyword and associated LIGHTING-SCHEDULE. Note that in the DOE-2.1E reference program, daylighting controls through the DAYLIGHTING command can only be allocated to the lighting power described by the LIGHTING keyword and cannot be allocated to the TASK-LIGHTING keyword.

Spaces containing daylighting controls shall be specified in terms of total floor area, daylit floor area under skylights and daylit area by windows. Each of these areas shall be specified in terms of associated ~~wall area~~, fenestration area, fenestration visible light transmittance, skylit daylight areas, primary sidelit daylight areas and secondary sidelit areas associated with each automatic daylighting controls, and controlled vs. uncontrolled lighting power.

If all the photocontrolled lighting in a given space is on a single type of control, assign the wattage for the photocontrolled lighting wattage to the LIGHTING keyword and the associated LIGHTING-SCHEDULE.

If the photocontrolled lighting has more than one type of control eligible for P~~p~~ower Adjustment Factors (PAFs) in Table 146-C of the Standards, then the schedule for the photocontrolled lighting shall be the wattage-weighted schedule, $WSCH_{h,d}$, of the controls schedules in Table N2-8 through Table N2-12 for each hour, h and for each day type, d.

Equation N2-10

$$WSCH_{h,d} = \frac{W1 \times SCH1_{h,d} + W2 \times SCH2_{h,d} + ...Wn \times SCHn_{h,d}}{W1 + W2 + ...Wn} \quad \text{~~6~~}$$

where,

Wn = wattage of lighting associated with lighting schedule SCHn, Watts

SCHn = predefined lighting schedule contained in Table N2-8 through Table N2-12 that reflects the uncontrolled lighting schedule or the lighting schedule of a control that qualifies for a lighting power adjustment factor in Table 146-C of the Standards, no units.

The program shall have the capability of weighting at least 3 separate pre-defined schedules for the controlled lighting. The wattage-weighted schedule and the combined wattage of the photocontrolled lighting shall be assigned to the LIGHTING keyword and the associated LIGHTING-SCHEDULE.

In spaces containing daylighting controls, the wattage of the lighting system that is not controlled by photocontrols shall be associated with the TASK-LIGHTING keyword. If the portion of the lighting system that is not controlled by photocontrols has a single type of control (including the default control not qualifying for a PAF from Table 146-C of the Standards), the TASK-LIGHT-SCH shall be associated with the appropriate Lighting Schedule from Table N2-8 through Table N2-12.

If the portion of the lighting system that is not controlled by photocontrols has more than one control type, then a weighted hourly schedule, $WSCH_{h,d}$, shall be created as described above (in Equation N2-10~~Equation 2-6~~) and associated to TASK-LIGHT-SCH . The program shall have the capability of weighting at least 3 separate schedules for the non-photocontrolled lighting.

For spaces without daylighting controls, if all the controlled lighting wattage is on a single type of control, assign the wattage for the controlled lighting wattage to the LIGHTING keyword and the associated LIGHTING-SCHEDULE.

Any uncontrolled lighting wattage in the space is assigned to the TASK-LIGHTING keyword and the associated TASK-LIGHT-SCH.

If all the lighting in the space is controlled, and there are two types of controls eligible for PAFs, the lighting wattage controlled by one of the two types of controls is assigned to the LIGHTING keyword and the associated LIGHTING-SCHEDULE. The wattage controlled by the second control type is assigned to the TASK-LIGHTING keyword and the associated TASK-LIGHT-SCH.

If all the lighting in the space is controlled, and there are more than two controls eligible for PAF's, then a weighted hourly schedule, $WSCH_{h,d}$, shall be created as described above and assigned to the LIGHTING keyword and the associated LIGHTING-SCHEDULE.

If the space has a combination of uncontrolled lighting and multiple controlled lighting systems that qualify for the PAFs in Table 146-C of the Standards, assign the uncontrolled lighting wattage to the TASK-LIGHTING keyword and the appropriate default lighting schedule associated with TASK-LIGHT-SCH. The controlled wattage shall be assigned to the LIGHTING keyword and a weighted hourly schedule, $WSCH_{h,d}$, shall be created as described above and associated with the LIGHTING-SCHEDULE for that space.

The control type names are abbreviated below in ~~NACM~~ Tables N2-8 and N2-9and refer to the appropriate controls listed in Standards Table 146-C~~A~~ and have the limitations as described in ~~Standards~~ §146(a)2~~4~~.

Multi~~Bi~~-level Osensor – Occupant sensor with "manual ON" or bi-level automatic ON combined with multi-level circuitry and switching for any space ≤ 250 square feet enclosed by floor-to-ceiling partitions; any size classroom, corridor, conference or waiting room

Hallway Osensor – Occupant sensor controlled multi-level switching or dimming system that reduces lighting power at least 50 percent~~%~~ when no persons are present for hallways of hotels/motels, multi-family, dormitory, and senior housing.

Stack Osensor – Occupant sensor controlled multi-level switching or dimming system that reduces lighting power at least 50 percent~~%~~ when no persons are present for Commercial and Industrial Storage stack areas (max. 2 aisles per sensor)

Library Osensor – Occupant sensor controlled multi-level switching or dimming system that reduces lighting power at least 50 percent~~%~~ when no persons are present for Library Stacks (maximum 2 aisles per sensor)

Manual Dimming - Dimming system, Manual dimming for Hotels/motels, restaurants, auditoriums, theaters

Program Multiscene - Dimming system, Multiscene programmable for Hotels/motels, restaurants, auditoriums, theaters

Combined Daylight – Occupant sensor With "manual ON" or bi-level automatic ON combined with multi-level circuitry and switching in conjunction with daylighting controls. Note: When the controlled lights are in the sidelight area, the appropriate PAF from Standards T~~t~~able 146-A is multiplied by all of the controlled wattage. When the controlled lights are in the skylit daylight area, this schedule is used in conjunction with the daylight modeling capability of the reference program and applied to 70 percent~~%~~ of the controlled lighting power.

Combined Dimming – Manual Dimming with Dimmable Electronic Ballasts and Occupant sensor with "manual ON" or automatic ON to less than 50 percent~~%~~ power and switching

Manual dimming of dimmable electronic ballasts when used in combination with a multi-level occupant sensor combined with multi-level circuitry and switching for any space less than or equal to 250 square feet enclosed by floor-to-ceiling partitions; any size classroom, corridor, conference or waiting room.

The following controls are not contained in either Table N2-8 or Table N2-9 as they are not modeled as a change in schedule. These controls are modeled as a reduction in lighting power. The reduction is directly calculated from the values in Standards Table 146-C. These controls include:

Demand Control – Demand responsive lighting control that reduces lighting power consumption in response to a demand response signal

EB Dimming – Manual dimming of dimmable electronic ballasts

DC plus EB - Demand responsive lighting control that reduces lighting power consumption in response to a demand response signal when used in combination with manual dimming of dimmable electronic ballasts.

Multi-Level Sidelit - Total primary and secondary sidelit daylight areas with automatic multi-level daylighting controls. When the total primary sidelit area in an enclosed space is greater than 2,500 ft², the controlled wattage of the general lighting is reduced by the PAF in both the proposed design and standard design.and all secondary sidelit areas When an existing space is retrofitted with skylights, and the lighting system is not recircuited, single level (on/off) controls qualify for the Multi-Level Sidelit PAF in both the proposed design and the standard design.

The PAF for multi-level sidelighting controls is applied to the Proposed Design but not to the Standard Design for lights controlled by a multi-level photocontrol in the secondary sidelit daylight area. The PAF for multi-level sidelighting controls is applied to the Proposed Design but not to the Standard Design for lights controlled by a multi-level photocontrol in a primary sidelit daylight area when the total primary sidelit daylight area in an enclosed space is less than 2,500 ft^2.

Skylighting

Note: If the standard design would otherwise be modeled with skylights and automatic lighting controls as required by ~~Standards Section~~§ 143(c) and ~~Section~~§ 131(c) D~~(a)~~, and the user would like to apply an occupancy exception, the user shall select and input the occupancy type(s) of the building from ~~Table N2-2~~ Table N2-5. All occupancies qualifying for the exception are included in the following list: Auditorium, Commercial/Industrial Storage – Refrigerated, Exhibit Display Area and

Museum, Religious Facilities, Theater (Motion Picture), and Theater (Performance). See also Section 2.3.5.2.

Automatic ~~D~~daylighting controls for skylit areas ~~are~~ shall be modeled using the DOE-2 DAYLIGHTING command and methodology. If occupancy sensors are used in conjunction with daylighting controls, the revised "combined daylight" control schedule is used as described above in conjunction with the DAYLIGHTING command.

Daylight modeling methodology not requiring a geometric model of the space

Visible light reflectances of walls, ceilings and floor set to 0.

Total skylight area combined into one square skylight having an area weighted average U-factor, SHGC and visible light transmittance.

Visible light transmittance is the product of the visible light transmittance of the skylight glazing and transmitting diffusers placed in the light well. It does not include the well efficiency or light transmittance of the light well which is calculated below.

LIGHT-REF-PT1 located directly beneath the center of the skylight.

Exchange fraction from differential area dA1 (the light sensor) to surface areas A2 (skylight area), F_{d1-2}, is calculated.

Equation N2-11 $$F_{d1-2} = \frac{2}{\pi} \times \left\{ \frac{x}{\sqrt{1+x^2}} \times \arctan\left(\frac{y}{\sqrt{1+x^2}} \right) + \frac{y}{\sqrt{1+y^2}} \times \arctan\left(\frac{x}{\sqrt{1+y^2}} \right) \right\}$$

where

x = width of skylight / distance between center of skylight and sensor

y = length of skylight / distance between center of skylight and sensor

Illuminances measured directly beneath the large single skylight are representative of illuminances at the edge of the skylit daylight area under smaller skylights by inserting a fixed skylight shade with a transmittance that is representative of all the optical losses of the skylighting system. In the DOE-2 reference program, the skylight shade transmittance is in the form of a schedule that can vary by hour, and by day and is defined by the keyword, VIS-TRANS-SCH

The transmittance of the fixed skylight shade, TS, is calculated as follows:

Equation N2-12 $$TS = CUsky \times SDR \times Redge \times WE \times DF / F_{d1-2}$$

Where,

CUsky = coefficient of utilization the skylight, 0.78

SDR = skylight area to skylit daylight area ratio, no units

Redge = ratio of edge of skylit area illuminance to average illuminance, 0.88

DF = dirt factor, 0.85

WE = average skylight well efficiency, a fixed value for non-tubular skylights and a value that varies by hour of day and month for tubular skylights

When non-tubular skylights are used, the well efficiency is constant and thus TS is a single value for the entire year.

Non-tubular well efficiency

Non-tubular well efficiency is calculated as follows:

Skylight wells are modeled as a space having the same geometric relationships as the light well with a 99 percent~~%~~ reflective ceiling, a 0 percent~~%~~ reflective floor, and wall reflectance matching that of the reflectance of the light well walls. The skylight is treated as a Lambertian (perfectly diffusing) emitter.

This Visual Basic for MS Excel code is given as an example. The subroutines called within these user defined functions are also given below

```
********* CU calculation for light wells or other skylights*****************
' User Defined Function to calculate Well Efficiency (WE) based on
' Coefficients of Utilization (CU)
' IESNA Handbook 8th Ed. pp 412-413
CeilRefl = 0.99,
WallRefl = wall reflectance,
FloorRefl = 0
If RCR < 0.01 (very short light well) then
WE = 1 / (1 - CeilRefl * FloorRefl)
 Else

C1 = (1 - WallRefl) * (1 - F ^ 2) * RCR / (2.5 * WallRefl * (1 - F ^ 2) + RCR
* F * (1 - WallRefl))
C2 = (1 - CeilRefl) * (1 + F) / (1 + CeilRefl * F)
C3 = (1 - FloorRefl) * (1 + F) / (1 + FloorRefl * F)
C0 = C1 + C2 + C3
CU1 = 2.5 * WallRefl * C1 * C3 * (1 - F)/ (RCR * (1 - WallRefl) * (1 -
FloorRefl) * C0)
CU2 = 0
CU3 = (1 - FloorRefl * C3 * (C1 + C2) / ((1 - FloorRefl) * C0)) * F / (1 -
FloorRefl)
WE = CU1 + CU2 + CU3

 F is the form factor for two equal sized parallel rectangles
'' IESNA Handbook 8th Ed. eq. 9-54
x = length / depth
y = width / depth
```

Equation N2-13

$$F = \left[\begin{array}{l} \frac{2}{\pi \times x \times y} \times \ln\left[\sqrt{\frac{(1+x^2)(1+y^2)}{1+x^2+y^2}}\right] \\ + \frac{2}{\pi \times x}\sqrt{1+x^2} \times \arctan\left[\frac{y}{\sqrt{1+x^2}}\right] \\ + \frac{2}{\pi \times y}\sqrt{1+y^2} \times \arctan\left[\frac{x}{\sqrt{1+y^2}}\right] \\ - \frac{2}{\pi \times x}\arctan[y] - \frac{2}{\pi \times y}\arctan[x] \end{array} \right]$$

Well cavity ratio, WCR, is the same as the room cavity ratio and relates well eight, H, width, W and length, L into a single geometric factor. Width and length are measured at the bottom of the light well.

Equation N2-14

$$WCR = \frac{5 \times H \times (W + L)}{W \times L}$$

Tubular well efficiency

The well efficiency of tubular light wells are calculated according to the formulation developed by Zastrow and Wittwer:

Equation N2-15

$$WE_{Tube} = \rho^{\left(\frac{4}{\pi} * \frac{L}{D} * \tan Z\right)}$$

where,

ρ = specular reflectance of interior pipe wall

L/D = ratio of pipe length to pipe inner diameter

Z = angle of incidence with respect to pipe axis (zenith angle of the sun)

The solar zenith angle, Z, is calculated from the latitude, L, solar declination, δ, and the solar hour angle, hs, where the solar hour angle is 15 degrees for each hour from solar noon (i.e. solar noon = 0 and 1 hour after solar noon = 15 degrees).

Equation N2-16

$$Z = \arccos\{\cos(L)\cos(\delta)\cos(h_s) + \sin(L)\sin(\delta)\}$$

The solar declination, δ, can be calculated from the Julian day, J, as follows:

Equation N2-17

$$\delta = 23.45 \times \sin\left[\frac{360(284 + J)}{365}\right]$$

The apparent solar time, AST, in hours, as determined by the position of the sun is given by the following.

Equation N2-18

$$AST = LST + ET + \frac{(LSM - LON)}{15}$$

where

ET = equation of time, hours

LSM = local standard time meridian, º of arc

LON = local longitude, 120º of arc for Pacific Standard Time

ET = 0.0002865+0.007136 cos(B) – 0.1225 sin(B) – 0.0558 cos(2B) – 0.1562 sin(2B)

Where

B = (J-1)(360/365)

During daylight savings time, local standard time is found by subtracting an hour from daylight savings time.

As described above, the skylight shade transmittance schedule is calculated based on the solar zenith on the 15th day of each month except for December and June, which is based on the 9th of the month. In this manner each month has a solar declination that approximately the midpoint of the month. The corresponding Julian Days are: 15, 46, 74, 105, 135, 160, 196, 227, 258, 288, 319, 343. Solar zeniths, Z greater than 88º are treated as equal to 88º.

Equation N2-19

$$Z = \min\left\lfloor 88^\circ, \arccos\left\{\cos(L)\cos(\delta)\cos(h_s) + \sin(L)\sin(\delta)\right\}\right\rfloor$$

The hourly shade transmittance schedule for tubular skylights is:

Equation N2-20

$$TS = CUsky \times SDR \times Redge \times WETube / F_{d1\text{-}2}$$

Except for well efficiency all the other terms are constant.

The lighting setpoint, LIGHT-SET-PT, for the control is based on the general lighting LPD, and the light source for general lighting.

Equation N2-21

$$LIGHT\text{-}SET\text{-}PT = CUlite \times LumEff \times LPDgen \times LDD$$

CUlite = coefficient of utilization of the light source, 0.57 fluorescent, 0.66 other source

LumEff = maintained luminous efficacy, 80 lm/W fluorescent, 65 lm/W other source

LPDgen = lighting power density of controlled lighting in skylit daylight area, lighting power of controlled lighting divided by the area of the skylit daylight area

LDD = luminaire dirt depreciation factor, 0.85

DOE-2 Command	SPACE
DOE-2 Keyword(s)	LIGHTING-SCHEDULE LIGHTING-W/SQFT LIGHT-TO-SPACE
	DAYLIGHTING
	LIGHT-SET-PT
	LIGHT-REF-PT1
	ZONE-FRACTION1
	LIGHT-CTRL-TYPE1
	TASK-LIGHT-SCH TASK-LT-W/SF
DOE-2 Command	WINDOW
DOE-2 Keyword(s	WIN-SHADE-TYPE
	VIS-TRANS-SCH
Input Type	Required
Tradeoffs	Yes

Modeling Rules for Proposed Design:

The proposed design lighting level is restricted based on which of the above two conditions is selected by the user for the building. The proposed design lighting level is determined as follows:

1. *Lighting compliance not performed.* The proposed design lighting power level shall be the lighting level listed in Table N2-5 or Table N2-6. ~~ACMs~~Compliance software shall report the default lighting energy on PERF-1 and indicate that no lighting compliance was performed. ~~ACMs~~Compliance software shall not print any Lighting forms.

2. *Lighting compliance performed.* The proposed design lighting power level for each space shall be as follows:

   a) *Nonresidential occupancies*: For each space the proposed design lighting level shall be the actual lighting level of the space as shown in the construction documents and lighting compliance documentation prior to the reduction of wattage through controls.. For each space without specified lighting level, ~~ACMs~~Compliance software shall select the default lighting level from Table N2-6 according to the occupancy type of the space.

   b) *High-rise residential and hotel/motel occupancies*: User inputs for lighting (and lighting controls) for the residential units and hotel/motel guest rooms shall be ignored and the lighting levels determined from Table N2-6 shall be used.

~~ACMs~~Compliance software shall print all applicable lighting forms and report the lighting energy use and the lighting level (Watts/ft^2) for the entire project. ~~ACMs~~Compliance software shall report "No Lighting Installed" for nonresidential spaces with no installed lighting. ~~ACMs~~Compliance software shall report "Default Residential Lighting" for residential units of high rise residential buildings and hotel/motel guest rooms.

If the modeled Lighting Power Density (LPD) is different than the actual LPD calculated from the fixture schedule for the building, ~~ACMs~~Compliance software shall model the larger of the two values for sizing the mechanical systems and for the compliance run. ~~ACMs~~Compliance software shall report the larger value on PERF-1. Lighting ~~levels~~ schedules shall be adjusted by any lighting Control Credit ~~Watts~~, if input by the user.

If day-lighting controls are used for daylight zones under skylights ~~greater than 2,500 ft^2 (see Section 131(c)2. of the Standards)~~, then 70 percent~~%~~ of the lighting power for the controlled lighting is ~~is~~ modeled using the daylighting algorithms in the compliance software and 30 percent~~%~~ is treated as uncontrolled.

If daylighting controls are used for daylit zones by windows, lighting power is reduced by all of the controlled lighting power is multiplied by the PAF's from Standards Table 146-C. Notwithstanding the limitations placed on size of primary sidelit daylight area listed in Table 146-C, the PAF is also applied to in the performance method to both the proposed and standard designs where automatic daylighting controls are a mandatory requirement (i.e. in primary sidelit daylight areas > 2,500 sf).~~reduced by Equation N2-6 for multi-level astronomical time switch controls and Equation N2-7 for automatic multi-level day-lighting controls.~~6

Lighting power is not modeled in unconditioned spaces that are modeled, but lighting in those spaces is required to meet the prescriptive requirements for regulated unconditioned spaces such as commercial and industrial storage spaces and parking garages. When these types of spaces are entered, the compliance software must report in the Special Features section that these spaces must comply with the prescriptive requirements for such spaces.

~~Equation N2-6~~

$$\cancel{PAF_{ASTRO} = 10 \times \text{Effective Aperture} - \frac{\text{Lighting Power Density}}{10} + 0.2}$$

~~Equation N2-7~~

$$\cancel{PAF_{PHOTO} = 2 \times PAF_{ASTRO}}$$

~~where~~

~~Equation N2-8~~

$$\cancel{\text{Effective Aperture} = \frac{VT_t \times \text{Well Efficiency x Skylight Area x } 0.85}{\text{Daylit Area under Skylights}}}$$

~~VT_t = visible transmittance of the glazing system including diffusers, when the entire system is not rated as a whole. $VLT_{glazing}$ is the product of the visible transmittance of the components~~

~~Well Efficiency = as defined in Standards Section 146(b)4.~~

~~Skylight area = the sum of the all of the skylight rough open areas in the zone~~

~~Daylit area under skylights = as described in Standards Section 131(c)~~

~~Note: In all cases where the photocontrol credit for skylighting is applied, the standard design shall include a multi-level astronomical time switch controls~~

Modeling Rules for Standard Design (New & Altered Existing):

~~ACMs~~Compliance software shall determine standard design lighting power level as follows:

1. *Lighting compliance not performed.* The standard design lighting power level shall be the same as the proposed design lighting level.
2. *Lighting compliance performed.*
   a) If no Tailored Lighting Allotment is input and lighting plans will be submitted for the entire building (excluding the residential units of high-rise residential buildings and hotel/motel guest rooms), the standard design lighting level shall be determined from either the whole building or area category method.
   b) If lighting plans will be submitted only for portions of the building, the standard design lighting level in areas without lighting plans shall be the lighting level listed in Table N2-6.
   c) If a tailored lighting method is used, the use-it-or-lose-it power for the proposed design shall be entered separately from the general lighting. The standard design shall have the same use-it-or-lose-it lighting power as the proposed design.
   d) In spaces with skylights that meet the criteria of ~~section~~§ 131(c)2B, (skylit daylight area > 2,500 sf) the lighting power density of general lighting shall be reduced by using daylighting algorithms to model 70 percent~~%~~ of the general lighting in the daylit area with ~~2/3's On/Off controls~~automatic daylighting controls of the type selected for the proposed design. The remaining 30 percent~~%~~ of the general lighting in the daylit area under skylights will be modeled as not being controlled by photocontrols.

   ~~PAF_{ASTRO} as given in Equation N2-6.~~

   e) In spaces with sidelighting that meet the criteria of ~~section~~§ 131(c)2C~~3~~, (primary sidelit daylight area > 2,500 sf) the lighting power density of

general lighting shall be reduced by the PAF in S~~s~~tandards T~~t~~able 146-C for automatic multi-level daylighting controls in primary sidelit daylight areas.

f) In spaces that meet the criteria of ~~Standards Section~~§ 143(c), the space shall be modeled as having ~~astronomical time switch controls2/3's on/off controls~~automatic daylighting controls of the type selected for the proposed design on 70 percent~~%~~ of the general lighting for the greater of the following areas: the actual daylit zone or one half of the area of the space. The remaining 30 percent~~%~~ of the general lighting in the defined area will be modeled as not being controlled by photocontrols. The skylights shall be modeled as having an effective aperture of 0.011. If the proposed design does not have automatic daylighting controls, the controls shall be ~~a~~ dimming controls with 30 percent~~%~~ of power consumption at 20 percent~~%~~ of light output.

When an existing space is retrofitted with skylights, and the lighting system is not recircuited, single level (on/off) controls qualify for the Multi-Level Sidelit PAF in both the proposed design and the standard design. In all other cases, the Standard design photocontrol shall be modeled as consuming no more than 35 percent~~%~~ when the daylight contribution matches the design illuminance.

Note that the effective aperture of the skylighting systems of 0.011 is the product of WE, SDR and DF. If these terms are included in the transmittance of the skylight, they must be removed from the calculation of the transmittance of the shade under the skylight. The standard skylight modeled with a transmittance of 0.011, has a transmittance of the fixed shade, TSstd, as follows:

Equation N2-22 $TSstd = CUsky \times Redge / F_{d1-2}$

As in the proposed design, lighting power is not modeled in unconditioned spaces that are modeled, but lighting in those spaces is required to meet the prescriptive requirements for regulated unconditioned spaces such as commercial and industrial storage spaces and parking garages. When these types of spaces are entered the compliance software must report in the Special Features section that these spaces must comply with the prescriptive requirements for such spaces.

~~The lighting power density of general lighting shall be reduced PAF_{ASTRO} as given in Equation N2-6. where Effective aperture shall be taken as of 0.01 for spaces with less than 1 W/SF ft^2 general lighting power density and the an effective aperture will be of 0.012 for spaces with general lighting power densities greater or equal to 1 W/SFft^2.~~

Modeling Rules for Standard Design (Existing Unchanged): ~~ACMs~~Compliance software shall determine the standard design lighting level of each space the same as it occurs in the existing design.

2.4.3 Schedules

2.4.3.1 Schedule Types

Description: Schedules are either "Nonresidential," “Retail”, "Hotel Function," or "Residential.”

DOE-2 Command N/A

DOE-2 Keyword(s)	N/A
Input Type	Required
Tradeoffs	Neutral
Modeling Rules for Proposed Design:	~~ACMs~~Compliance software shall select the schedule type from Table N2-7. If 70 percent or more of the conditioned space in a building served by a central system is one occupancy type, the entire building may be modeled with that occupancy schedule. Otherwise, each occupancy schedule shall be modeled separately with the capacity of the central system allocated to each occupancy schedule according to the portion of the total conditioned floor area served by the central system.
Modeling Rules for Standard Design (All):	The standard design shall use the same schedule type as the proposed design except for the residential units of high-rise residential buildings with or without setback thermostat for which the standard design shall always use the schedule type with setback thermostat (Table N2-10).

2.4.3.2 Weekly Schedules

Description:	The reference method has three different schedules for different days of the week: (1) Weekdays, (2) Saturdays, and (3) Sundays (which includes holidays). Weekly schedules specify: a) the percentage of full load for internal gains; b) thermostat set points for heating and cooling systems; and, c) hours of operation for heating, cooling and ventilation systems.
DOE-2 Command	SPACE
DOE-2 Keyword(s)	SCHEDULE
Input Type	Prescribed
Tradeoffs	Neutral
Modeling Rules for Proposed Design:	Schedules are specified in Table N2-7. For high-rise residential occupancies, ~~ACMs~~Compliance software shall require the user to enter whether the proposed design uses setback or non-setback thermostats for heating. ~~ACMs~~Compliance software shall use either Table N2-10 or Table N2-11 depending on whether the building uses setback thermostats for heating or uses non-setback thermostats.
Modeling Rules for Standard Design (All):	The standard design shall use the same weekly schedules as the proposed design for nonresidential, retail, and hotel/motel occupancies. For high-rise residential occupancies the standard design shall use the weekly schedules in Table N2-10 assuming setback thermostats for the heating mode.

Table N2-7 – Schedule Types of Occupancies & Sub-Occupancies

Occupancy or Sub-Occupancy Type	Schedule
Atrium	Table N2-8~~4~~: Nonresidential
Auditorium	Table N2-8~~4~~: Nonresidential
Auto Repair	Table N2-8~~4~~: Nonresidential
Bar, Cocktail Lounge and Casino	Table N2-8~~4~~: Nonresidential
~~Barber and~~ Beauty Salon~~Shop~~	Table N2-8~~4~~: Nonresidential
Classrooms, Lecture, Training, Vocational Room	Table N2-8~~4~~: Nonresidential
Civic Meeting Place ~~Space~~	Table N2-8~~4~~: Nonresidential
Commercial and Industrial Storage	Table N2-8~~4~~: Nonresidential
Convention, Conference, Multipurpose, and Meeting Centers	Table N2-8~~4~~: Nonresidential
Corridors, Restrooms, Stairs, and Support Areas	Table N2-8~~4~~: Nonresidential
Dining	Table N2-8~~4~~: Nonresidential
Electrical, Mechanical, Telephone Room	Table N2-8~~4~~: Nonresidential
Exercise Center, Gymnasium	Table N2-8~~4~~: Nonresidential
Exhibit, Museum	Table N2-8~~4~~: Nonresidential
Financial Transaction	Table N2-8~~4~~: Nonresidential
Dry Cleaning (Coin Operated)	Table N2-8~~4~~: Nonresidential
Dry Cleaning (Full Service Commercial)	Table N2-8~~4~~: Nonresidential
General Commercial and Industrial Work, High Bay	Table N2-8~~4~~: Nonresidential
General Commercial and Industrial Work, Low Bay	Table N2-8~~4~~: Nonresidential
General Commercial and Industrial Work, Precision	Table N2-8~~4~~: Nonresidential
Grocery Sales	Table N2-8~~4~~: Nonresidential
High-rise Residential with Setback Thermostat	Table N2-10~~6~~: Residential / with Setback
High-rise Residential without Setback Thermostat	Table N2-11~~7~~: Residential / without Setback
Hotel Function Area	Table N2-9~~5~~: Hotel Function
Hotel/Motel Guest Room with Setback Thermostat	Table N2-10~~6~~: Residential / with Setback
Hotel/Motel Guest Room without Setback Thermostat	Table N2-11~~7~~: Residential / without Setback
Hotel/Motel Hallways	Table N2-9 Hotel Function
Housing, Public and Commons Areas, Multi-family with Setback Thermostat	Table N2-10~~6~~: Residential / with Setback
Housing, Public and Commons Areas, Multi-family without Setback Thermostat	Table N2-11~~7~~: Residential / without Setback
Housing, Public and Common Areas, Dormitory, Senior Housing with Setback Thermostat	Table N2-10~~6~~: Residential / with Setback
Housing, Public and Commons Areas, Dormitory, Senior Housing without Setback Thermostat	Table N2-11~~7~~: Residential / without Setback
Kitchen, Food Preparation	Table N2-8~~4~~: Nonresidential
Laboratory, Scientific	Table N2-8: Nonresidential
Laundry	Table N2-8~~4~~: Nonresidential
Library, Reading Areas	Table N2-8~~4~~: Nonresidential
Library, Stacks	Table N2-8~~4~~: Nonresidential
Lobby, Hotel	Table N2-9~~5~~: Hotel Function
Lobby, Main Entry	Table N2-8~~4~~: Nonresidential
Locker/Dressing Room	Table N2-8~~4~~: Nonresidential
Lounge, Recreation	Table N2-8~~4~~: Nonresidential
Mall	Table N2-12~~11~~~~7~~: Retail
Medical and Clinical Care	Table N2-8~~4~~: Nonresidential
Office	Table N2-8~~4~~: Nonresidential

Occupancy or Sub-Occupancy Type	Schedule
Police Station and Fire Station	Table N2-84: Nonresidential
Religious Worship	Table N2-84: Nonresidential
Retail Merchandise Sales, Wholesale Showroom	Table N2-128: Retail
Tenant Lease Space	Table N2-84: Nonresidential
Theater, Motion Picture	Table N2-84: Nonresidential
Theater, Performance	Table N2-84: Nonresidential
Transportation Function	Table N2-84: Nonresidential
Waiting Area	Table N2-84: Nonresidential
All Other	Table N2-84: Nonresidential

Table N2-8 – Nonresidential Occupancy Schedules (Other than Retail)

-	-	1	2	3	4	5	6	7	8	9	10	11	12	13	14	15	16	17	18	19	20	21	22	23	24
Heating (ºF)	WD	60	60	60	60	60	65	65	70	70	70	70	70	70	70	70	70	70	70	65	60	60	60	60	60
	Sat	60	60	60	60	60	65	65	65	65	65	65	65	65	65	65	65	60	60	60	60	60	60	60	60
	Sun	60	60	60	60	60	65	65	65	65	65	65	65	65	65	65	65	60	60	60	60	60	60	60	60
Cooling (ºF)	WD	77	77	77	77	77	73	73	73	73	73	73	73	73	73	73	73	73	73	77	77	77	77	77	77
	Sat	77	77	77	77	77	73	73	73	73	73	73	73	73	73	73	73	73	73	77	77	77	77	77	77
	Sun	77	77	77	77	77	73	73	73	73	73	73	73	73	73	73	73	73	73	77	77	77	77	77	77
Lights (%) Uncontrolled	WD	5	5	5	5	10	20	40	70	80	85	85	85	85	85	85	85	85	80	35	10	10	10	10	10
	Sat	5	5	5	5	5	10	15	25	25	25	25	25	25	25	20	20	20	15	10	10	10	10	10	10
	Sun	5	5	5	5	5	10	10	15	15	15	15	15	15	15	15	15	15	10	10	10	5	5	5	5
~~Lights (%) Hotel/Motel Hallway/Lobby Uncontrolled~~	~~WD~~	~~100~~	~~100~~	~~100~~	~~100~~	~~100~~	~~100~~	~~100~~	~~100~~	~~100~~	~~100~~	~~100~~	~~100~~	~~100~~	~~100~~	~~100~~	~~100~~	~~100~~	~~100~~	~~100~~	~~100~~	~~100~~	~~100~~	~~100~~	~~100~~
	~~Sat~~	~~100~~	~~100~~	~~100~~	~~100~~	~~100~~	~~100~~	~~100~~	~~100~~	~~100~~	~~100~~	~~100~~	~~100~~	~~100~~	~~100~~	~~100~~	~~100~~	~~100~~	~~100~~	~~100~~	~~100~~	~~100~~	~~100~~	~~100~~	~~100~~
	~~Sun~~	~~100~~	~~100~~	~~100~~	~~100~~	~~100~~	~~100~~	~~100~~	~~100~~	~~100~~	~~100~~	~~100~~	~~100~~	~~100~~	~~100~~	~~100~~	~~10~~	~~100~~	~~100~~	~~100~~	~~100~~	~~100~~	~~100~~	~~100~~	~~100~~
Lights (%) Bi-level Osensor	WD	4	4	4	4	8	15	31	56	67	73	74	74	74	74	73	71	70	64	28	8	8	7	7	8
	Sat	4	4	4	4	4	8	12	20	21	22	22	22	22	22	17	17	16	12	8	8	8	7	7	8
	Sun	4	4	4	4	4	8	8	12	13	13	13	13	13	13	13	13	12	8	8	8	4	4	4	4
~~Lights (%) Hallway Osensor~~	~~WD~~	~~75~~	~~75~~	~~75~~	~~75~~	~~75~~	~~75~~	~~75~~	~~75~~	~~75~~	~~75~~	~~75~~	~~75~~	~~75~~	~~75~~	~~75~~	~~75~~	~~75~~	~~75~~	~~75~~	~~75~~	~~75~~	~~75~~	~~75~~	~~75~~
	~~Sat~~	~~75~~	~~75~~	~~75~~	~~75~~	~~75~~	~~75~~	~~75~~	~~75~~	~~75~~	~~75~~	~~75~~	~~75~~	~~75~~	~~75~~	~~75~~	~~75~~	~~75~~	~~75~~	~~75~~	~~75~~	~~75~~	~~75~~	~~75~~	~~75~~
	~~Sun~~	~~75~~	~~75~~	~~75~~	~~75~~	~~75~~	~~75~~	~~75~~	~~75~~	~~75~~	~~75~~	~~75~~	~~75~~	~~75~~	~~75~~	~~75~~	~~8~~	~~75~~	~~75~~	~~75~~	~~75~~	~~75~~	~~75~~	~~75~~	~~75~~
Lights (%) Stack Osensor	WD	4	4	4	4	9	17	34	60	68	72	72	72	72	72	72	72	72	68	30	9	9	9	9	9
	Sat	4	4	4	4	4	9	13	22	22	22	22	22	22	22	17	17	17	13	9	9	9	9	9	9
	Sun	4	4	4	4	4	9	9	13	13	13	13	13	13	13	13	13	13	9	9	9	4	4	4	4
Lights (%) Library Osensor	WD	4	4	4	4	8	16	33	60	73	80	81	82	82	81	80	78	75	66	28	8	8	8	8	8
	Sat	4	4	4	4	4	9	13	22	22	22	22	22	22	22	17	17	17	13	9	9	9	9	9	9
	Sun	4	4	4	4	4	9	9	13	13	13	13	13	13	13	13	13	13	9	9	9	4	4	4	4
Lights (%) Manual Dimming	WD	5	5	5	5	9	18	36	63	72	77	77	77	77	77	77	77	77	72	32	9	9	9	9	9
	Sat	5	5	5	5	5	9	14	23	23	23	23	23	23	23	18	18	18	14	9	9	9	9	9	9
	Sun	5	5	5	5	5	9	9	14	14	14	14	14	14	14	14	14	14	9	9	9	5	5	5	5
Lights (%) Program Multiscene	WD	4	4	4	4	8	16	32	56	64	68	68	68	68	68	68	68	68	64	28	8	8	8	8	8
	Sat	4	4	4	4	4	8	12	20	20	20	20	20	20	20	16	16	16	12	8	8	8	8	8	8
	Sun	4	4	4	4	4	8	8	12	12	12	12	12	12	12	12	12	12	8	8	8	4	4	4	4
Lights (%) Combined Daylight	WD	4	4	4	4	8	15	31	56	67	73	74	74	74	74	73	71	70	64	28	8	8	7	7	8
	Sat	4	4	4	4	4	8	12	20	21	22	22	22	22	22	17	17	16	12	8	8	8	7	7	8
	Sun	4	4	4	4	4	8	8	12	13	13	13	13	13	13	13	13	12	8	8	8	4	4	4	4
Lights (%) Combined Dimming	WD	4	4	4	4	7	14	29	53	64	70	71	71	71	71	70	68	65	60	26	7	7	7	7	7
	Sat	4	4	4	4	4	7	11	19	20	21	21	21	21	21	16	16	15	11	7	7	7	7	7	7
	Sun	4	4	4	4	4	7	7	11	12	12	13	13	13	13	12	12	12	8	7	7	3	3	3	3
Equipment (%)	WD	15	15	15	15	15	20	35	60	70	70	70	70	70	70	70	70	65	45	30	20	20	15	15	15
	Sat	15	15	15	15	15	15	15	20	25	25	25	25	25	25	20	20	20	15	15	15	15	15	15	15
	Sun	15	15	15	15	15	15	15	20	20	20	20	20	20	20	20	20	20	15	15	15	15	15	15	15
Fans (%)	WD	off	off	off	off	off	on	on	on	on	on	on	on	on	on	on	on	on	on	on	on	off	off	off	off
	Sat	off	off	off	off	off	on	on	on	on	on	on	on	on	on	on	off	off	off	off	off	off	off	off	off
	Sun	off	off	off	off	off	off	off	off	off	off	off	off	off	off	off	off	off	off	off	off	off	off	off	off

		1	2	3	4	5	6	7	8	9	10	11	12	13	14	15	16	17	18	19	20	21	22	23	24
Infiltration (%)	WD	100	100	100	100	100	0	0	0	0	0	0	0	0	0	0	0	0	0	0	0	100	100	100	100
	Sat	100	100	100	100	100	0	0	0	0	0	0	0	0	0	0	100	100	100	100	100	100	100	100	100
	Sun	100	100	100	100	100	100	100	100	100	100	100	100	100	100	100	100	100	100	100	100	100	100	100	100
People (%)	WD	0	0	0	0	5	10	25	65	65	65	65	60	60	65	65	65	65	40	25	10	5	5	5	0
	Sat	0	0	0	0	0	0	5	15	15	15	15	15	15	15	15	15	15	5	5	5	0	0	0	0
	Sun	0	0	0	0	0	0	0	5	5	5	5	5	5	5	5	5	5	5	5	5	0	0	0	0
Hot Water (%)	WD	0	0	0	0	10	10	50	50	50	50	70	90	90	50	50	70	50	50	50	10	10	10	10	0
	Sat	0	0	0	0	0	0	10	20	20	20	20	20	20	20	20	20	20	10	10	10	0	0	0	0
	Sun	0	0	0	0	0	0	0	10	10	10	10	10	10	10	10	10	10	10	10	10	0	0	0	0

		~~Hour~~																							
		~~1~~	~~2~~	~~3~~	~~4~~	~~5~~	~~6~~	~~7~~	~~8~~	~~9~~	~~10~~	~~11~~	~~12~~	~~13~~	~~14~~	~~15~~	~~16~~	~~17~~	~~18~~	~~19~~	~~20~~	~~21~~	~~22~~	~~23~~	~~24~~
~~Heating (ºF)~~	~~WD~~	~~60~~	~~60~~	~~60~~	~~60~~	~~60~~	~~65~~	~~65~~	~~70~~	~~70~~	~~70~~	~~70~~	~~70~~	~~70~~	~~70~~	~~70~~	~~70~~	~~70~~	~~70~~	~~65~~	~~60~~	~~60~~	~~60~~	~~60~~	~~60~~
	~~SAT~~	~~60~~	~~60~~	~~60~~	~~60~~	~~60~~	~~65~~	~~65~~	~~65~~	~~65~~	~~65~~	~~65~~	~~65~~	~~65~~	~~65~~	~~65~~	~~65~~	~~60~~	~~60~~	~~60~~	~~60~~	~~60~~	~~60~~	~~60~~	~~60~~
	~~Sun~~	~~60~~	~~60~~	~~60~~	~~60~~	~~60~~	~~65~~	~~65~~	~~65~~	~~65~~	~~65~~	~~65~~	~~65~~	~~65~~	~~65~~	~~65~~	~~65~~	~~60~~	~~60~~	~~60~~	~~60~~	~~60~~	~~60~~	~~60~~	~~60~~
~~Cooling (ºF)~~	~~WD~~	~~77~~	~~77~~	~~77~~	~~77~~	~~77~~	~~73~~	~~73~~	~~73~~	~~73~~	~~73~~	~~73~~	~~73~~	~~73~~	~~73~~	~~73~~	~~73~~	~~73~~	~~73~~	~~77~~	~~77~~	~~77~~	~~77~~	~~77~~	~~77~~
	~~SAT~~	~~77~~	~~77~~	~~77~~	~~77~~	~~77~~	~~73~~	~~73~~	~~73~~	~~73~~	~~73~~	~~73~~	~~73~~	~~73~~	~~73~~	~~73~~	~~73~~	~~73~~	~~73~~	~~77~~	~~77~~	~~77~~	~~77~~	~~77~~	~~77~~
	~~Sun~~	~~77~~	~~77~~	~~77~~	~~77~~	~~77~~	~~73~~	~~73~~	~~73~~	~~73~~	~~73~~	~~73~~	~~73~~	~~73~~	~~73~~	~~73~~	~~73~~	~~73~~	~~73~~	~~77~~	~~77~~	~~77~~	~~77~~	~~77~~	~~77~~
~~Lights (%)~~	~~WD~~	~~5~~	~~5~~	~~5~~	~~5~~	~~10~~	~~20~~	~~40~~	~~70~~	~~80~~	~~85~~	~~85~~	~~85~~	~~85~~	~~85~~	~~85~~	~~85~~	~~85~~	~~80~~	~~35~~	~~10~~	~~10~~	~~10~~	~~10~~	~~10~~
	~~SAT~~	~~5~~	~~5~~	~~5~~	~~5~~	~~5~~	~~10~~	~~15~~	~~25~~	~~25~~	~~25~~	~~25~~	~~25~~	~~25~~	~~25~~	~~20~~	~~20~~	~~20~~	~~15~~	~~10~~	~~10~~	~~10~~	~~10~~	~~10~~	~~10~~
	~~Sun~~	~~5~~	~~5~~	~~5~~	~~5~~	~~5~~	~~10~~	~~10~~	~~15~~	~~15~~	~~15~~	~~15~~	~~15~~	~~15~~	~~15~~	~~15~~	~~15~~	~~15~~	~~10~~	~~10~~	~~10~~	~~5~~	~~5~~	~~5~~	~~5~~
~~Equipment (%)~~	~~WD~~	~~15~~	~~15~~	~~15~~	~~15~~	~~15~~	~~20~~	~~35~~	~~60~~	~~70~~	~~70~~	~~70~~	~~70~~	~~70~~	~~70~~	~~70~~	~~70~~	~~65~~	~~45~~	~~30~~	~~20~~	~~20~~	~~15~~	~~15~~	~~15~~
	~~SAT~~	~~15~~	~~15~~	~~15~~	~~15~~	~~15~~	~~15~~	~~15~~	~~20~~	~~25~~	~~25~~	~~25~~	~~25~~	~~25~~	~~25~~	~~20~~	~~20~~	~~20~~	~~15~~	~~15~~	~~15~~	~~15~~	~~15~~	~~15~~	~~15~~
	~~Sun~~	~~15~~	~~15~~	~~15~~	~~15~~	~~15~~	~~15~~	~~15~~	~~20~~	~~20~~	~~20~~	~~20~~	~~20~~	~~20~~	~~20~~	~~20~~	~~20~~	~~20~~	~~15~~	~~15~~	~~15~~	~~15~~	~~15~~	~~15~~	~~15~~
~~Fans (%)~~	~~WD~~	~~off~~	~~off~~	~~off~~	~~off~~	~~off~~	~~on~~	~~on~~	~~on~~	~~on~~	~~on~~	~~on~~	~~on~~	~~on~~	~~on~~	~~on~~	~~on~~	~~on~~	~~on~~	~~on~~	~~on~~	~~off~~	~~off~~	~~off~~	~~off~~
	~~SAT~~	~~off~~	~~off~~	~~off~~	~~off~~	~~off~~	~~on~~	~~on~~	~~on~~	~~on~~	~~on~~	~~on~~	~~on~~	~~on~~	~~on~~	~~on~~	~~off~~	~~off~~	~~off~~	~~off~~	~~off~~	~~off~~	~~off~~	~~off~~	~~off~~
	~~Sun~~	~~off~~	~~off~~	~~off~~	~~off~~	~~off~~	~~off~~	~~off~~	~~off~~	~~off~~	~~off~~	~~off~~	~~off~~	~~off~~	~~off~~	~~off~~	~~off~~	~~off~~	~~off~~	~~off~~	~~off~~	~~off~~	~~off~~	~~off~~	~~off~~
~~Infiltration (%)~~	~~WD~~	~~100~~	~~100~~	~~100~~	~~100~~	~~100~~	~~0~~	~~0~~	~~0~~	~~0~~	~~0~~	~~0~~	~~0~~	~~0~~	~~0~~	~~0~~	~~0~~	~~0~~	~~0~~	~~0~~	~~0~~	~~100~~	~~100~~	~~100~~	~~100~~
	~~SAT~~	~~100~~	~~100~~	~~100~~	~~100~~	~~100~~	~~0~~	~~0~~	~~0~~	~~0~~	~~0~~	~~0~~	~~0~~	~~0~~	~~0~~	~~0~~	~~100~~	~~100~~	~~100~~	~~100~~	~~100~~	~~100~~	~~100~~	~~100~~	~~100~~
	~~Sun~~	~~100~~	~~100~~	~~100~~	~~100~~	~~100~~	~~100~~	~~100~~	~~100~~	~~100~~	~~100~~	~~100~~	~~100~~	~~100~~	~~100~~	~~100~~	~~100~~	~~100~~	~~100~~	~~100~~	~~100~~	~~100~~	~~100~~	~~100~~	~~100~~
~~People (%)~~	~~WD~~	~~0~~	~~0~~	~~0~~	~~0~~	~~5~~	~~10~~	~~25~~	~~65~~	~~65~~	~~65~~	~~65~~	~~60~~	~~60~~	~~65~~	~~65~~	~~65~~	~~65~~	~~40~~	~~25~~	~~10~~	~~5~~	~~5~~	~~5~~	~~0~~
	~~SAT~~	~~0~~	~~0~~	~~0~~	~~0~~	~~0~~	~~0~~	~~5~~	~~15~~	~~15~~	~~15~~	~~15~~	~~15~~	~~15~~	~~15~~	~~15~~	~~15~~	~~15~~	~~5~~	~~5~~	~~5~~	~~0~~	~~0~~	~~0~~	~~0~~
	~~Sun~~	~~0~~	~~0~~	~~0~~	~~0~~	~~0~~	~~0~~	~~0~~	~~5~~	~~5~~	~~5~~	~~5~~	~~5~~	~~5~~	~~5~~	~~5~~	~~5~~	~~5~~	~~5~~	~~5~~	~~5~~	~~0~~	~~0~~	~~0~~	~~0~~
~~Hot Water (%)~~	~~WD~~	~~0~~	~~0~~	~~0~~	~~0~~	~~10~~	~~10~~	~~50~~	~~50~~	~~50~~	~~50~~	~~70~~	~~90~~	~~90~~	~~50~~	~~50~~	~~70~~	~~50~~	~~50~~	~~50~~	~~10~~	~~10~~	~~10~~	~~10~~	~~0~~
	~~SAT~~	~~0~~	~~0~~	~~0~~	~~0~~	~~0~~	~~0~~	~~10~~	~~20~~	~~20~~	~~20~~	~~20~~	~~20~~	~~20~~	~~20~~	~~20~~	~~20~~	~~20~~	~~10~~	~~10~~	~~10~~	~~0~~	~~0~~	~~0~~	~~0~~
	~~Sun~~	~~0~~	~~0~~	~~0~~	~~0~~	~~0~~	~~0~~	~~0~~	~~10~~	~~10~~	~~10~~	~~10~~	~~10~~	~~10~~	~~10~~	~~10~~	~~10~~	~~10~~	~~10~~	~~10~~	~~10~~	~~0~~	~~0~~	~~0~~	~~0~~

Table N2-9 – Hotel Function Occupancy Schedules

		Hour																							
		1	2	3	4	5	6	7	8	9	10	11	12	13	14	15	16	17	18	19	20	21	22	23	24
Heating (ºF)	WD	55	55	55	55	55	55	63	68	70	70	70	70	70	70	70	70	70	70	70	70	70	70	55	55
	SAT	55	55	55	55	55	55	63	68	70	70	70	70	70	70	70	70	70	70	70	70	70	70	55	55
	Sun	55	55	55	55	55	55	63	68	70	70	70	70	70	70	70	70	70	70	70	70	70	70	55	55
Cooling (ºF)	WD	95	95	95	95	95	95	95	95	74	74	74	74	74	74	74	74	74	74	74	74	74	74	74	95
	SAT	95	95	95	95	95	95	95	95	74	74	74	74	74	74	74	74	74	74	74	74	74	74	74	95
	Sun	95	95	95	95	95	95	95	95	74	74	74	74	74	74	74	74	74	74	74	74	74	74	74	95
Lights (%)	WD	5	5	5	5	5	5	5	5	25	50	90	90	90	90	90	90	75	50	50	50	50	10	5	5
	SAT	5	5	5	5	5	5	5	5	25	50	90	90	90	90	90	90	75	50	50	50	50	10	5	5
	Sun	5	5	5	5	5	5	5	5	25	50	90	90	90	90	90	90	75	50	50	50	50	10	5	5
Lights (%) Hotel/Motel Hallway/Lobby Uncontrolled	WD	100	100	100	100	100	100	100	100	100	100	100	100	100	100	100	100	100	100	100	100	100	100	100	100
	Sat	100	100	100	100	100	100	100	100	100	100	100	100	100	100	100	100	100	100	100	100	100	100	100	100
	Sun	100	100	100	100	100	100	100	100	100	100	100	100	100	100	100	10	100	100	100	100	100	100	100	100
Lights (%) Hallway Osensor	WD	75	75	75	75	75	75	75	75	75	75	75	75	75	75	75	75	75	75	75	75	75	75	75	75
	Sat	75	75	75	75	75	75	75	75	75	75	75	75	75	75	75	75	75	75	75	75	75	75	75	75
	Sun	75	75	75	75	75	75	75	75	75	75	75	75	75	75	75	8	75	75	75	75	75	75	75	75
Equipment (%)	WD	5	5	5	5	5	5	5	5	50	50	50	50	30	50	50	50	30	10	30	30	30	10	5	5
	SAT	5	5	5	5	5	5	5	5	50	50	50	50	30	50	50	50	30	10	30	30	30	10	5	5
	Sun	5	5	5	5	5	5	5	5	50	50	50	50	30	50	50	50	30	10	30	30	30	10	5	5
Fans (%)	WD	off	off	off	off	off	off	on	on	on	on	on	on	on	on	on	on	on	on	on	on	on	on	on	off
	SAT	off	off	off	off	off	off	on	on	on	on	on	on	on	on	on	on	on	on	on	on	on	on	on	off
	Sun	off	off	off	off	off	off	on	on	on	on	on	on	on	on	on	on	on	on	on	on	on	on	on	off
Infiltration (%)	WD	100	100	100	100	100	100	0	0	0	0	0	0	0	0	0	0	0	0	0	0	0	0	0	100
	SAT	100	100	100	100	100	100	0	0	0	0	0	0	0	0	0	0	0	0	0	0	0	0	0	100
	Sun	100	100	100	100	100	100	0	0	0	0	0	0	0	0	0	0	0	0	0	0	0	0	0	100
People (%)	WD	0	0	0	0	0	0	0	5	35	90	90	90	25	90	90	90	50	25	50	50	50	10	0	0
	SAT	0	0	0	0	0	0	0	5	35	90	90	90	25	90	90	90	50	25	50	50	50	10	0	0
	Sun	0	0	0	0	0	0	0	5	35	90	90	90	25	90	90	90	50	25	50	50	50	10	0	0
Hot Water (%)	WD	0	0	0	0	0	0	10	40	40	60	60	60	90	60	60	60	60	40	50	50	50	10	0	0
	SAT	0	0	0	0	0	0	10	40	40	60	60	60	90	60	60	60	60	40	50	50	50	10	0	0
	Sun	0	0	0	0	0	0	10	40	40	60	60	60	90	60	60	60	60	40	50	50	50	10	0	0

Table N2-10 – Residential Occupancy Schedules (Including Hotel/Motel Guest Rooms) with Setback Thermostat for Heating

		Hour																							
		1	2	3	4	5	6	7	8	9	10	11	12	13	14	15	16	17	18	19	20	21	22	23	24
Heating (ºF)	WD	60	60	60	60	60	60	68	68	68	68	68	68	68	68	68	68	68	68	68	68	68	68	60	60
	SAT	60	60	60	60	60	60	68	68	68	68	68	68	68	68	68	68	68	68	68	68	68	68	60	60
	Sun	60	60	60	60	60	60	68	68	68	68	68	68	68	68	68	68	68	68	68	68	68	68	60	60
Cooling (ºF)	WD	78	78	78	78	78	78	78	78	78	78	78	78	78	78	78	78	78	78	78	78	78	78	78	78
	SAT	78	78	78	78	78	78	78	78	78	78	78	78	78	78	78	78	78	78	78	78	78	78	78	78
	Sun	78	78	78	78	78	78	78	78	78	78	78	78	78	78	78	78	78	78	78	78	78	78	78	78
Lights (%)	WD	10	10	10	10	10	30	45	45	45	45	30	30	30	30	30	30	30	30	60	80	90	80	60	30
	SAT	10	10	10	10	10	30	45	45	45	45	30	30	30	30	30	30	30	30	60	80	90	80	60	30
	Sun	10	10	10	10	10	30	45	45	45	45	30	30	30	30	30	30	30	30	60	80	90	80	60	30
Equipment (%)	WD	10	10	10	10	10	30	45	45	45	45	30	30	30	30	30	30	30	30	60	80	90	80	60	30
	SAT	10	10	10	10	10	30	45	45	45	45	30	30	30	30	30	30	30	30	60	80	90	80	60	30
	Sun	10	10	10	10	10	30	45	45	45	45	30	30	30	30	30	30	30	30	60	80	90	80	60	30
Fans (%)	WD	on	on	on	on	on	on	on	on	on	on	on	on	on	on	on	on	on	on	on	on	on	on	on	on
	SAT	on	on	on	on	on	on	on	on	on	on	on	on	on	on	on	on	on	on	on	on	on	on	on	on
	Sun	on	on	on	on	on	on	on	on	on	on	on	on	on	on	on	on	on	on	on	on	on	on	on	on
Infiltration (%)	WD	100	100	100	100	100	100	100	100	100	100	100	100	100	100	100	100	100	100	100	100	100	100	100	100
	SAT	100	100	100	100	100	100	100	100	100	100	100	100	100	100	100	100	100	100	100	100	100	100	100	100
	Sun	100	100	100	100	100	100	100	100	100	100	100	100	100	100	100	100	100	100	100	100	100	100	100	100
People (%)	WD	90	90	90	90	90	90	70	40	40	20	20	20	20	20	20	30	50	50	50	70	70	80	90	90
	SAT	90	90	90	90	90	90	70	40	40	20	20	20	20	20	20	30	50	50	50	70	70	80	90	90
	Sun	90	90	90	90	90	90	70	40	40	20	20	20	20	20	20	30	50	50	50	70	70	80	90	90
Hot Water (%)	WD	0	0	0	5	5	5	80	70	50	40	25	25	25	25	50	60	70	70	40	25	20	20	5	5
	SAT	0	0	0	5	5	5	80	70	50	40	25	25	25	25	50	60	70	70	40	25	20	20	5	5
	Sun	0	0	0	5	5	5	80	70	50	40	25	25	25	25	50	60	70	70	40	25	20	20	5	5

Table N2-11 – Residential Occupancy Schedules (Including Hotel/Motel Guest Rooms) Without Setback Thermostat

		Hour																							
		1	2	3	4	5	6	7	8	9	10	11	12	13	14	15	16	17	18	19	20	21	22	23	24
Heating (ºF)	WD	68	68	68	68	68	68	68	68	68	68	68	68	68	68	68	68	68	68	68	68	68	68	68	68
	SAT	68	68	68	68	68	68	68	68	68	68	68	68	68	68	68	68	68	68	68	68	68	68	68	68
	Sun	68	68	68	68	68	68	68	68	68	68	68	68	68	68	68	68	68	68	68	68	68	68	68	68
Cooling (ºF)	WD	78	78	78	78	78	78	78	78	78	78	78	78	78	78	78	78	78	78	78	78	78	78	78	78
	SAT	78	78	78	78	78	78	78	78	78	78	78	78	78	78	78	78	78	78	78	78	78	78	78	78
	Sun	78	78	78	78	78	78	78	78	78	78	78	78	78	78	78	78	78	78	78	78	78	78	78	78
Lights (%)	WD	10	10	10	10	10	30	45	45	45	45	30	30	30	30	30	30	30	30	60	80	90	80	60	30
	SAT	10	10	10	10	10	30	45	45	45	45	30	30	30	30	30	30	30	30	60	80	90	80	60	30
	Sun	10	10	10	10	10	30	45	45	45	45	30	30	30	30	30	30	30	30	60	80	90	80	60	30
Equipment (%)	WD	10	10	10	10	10	30	45	45	45	45	30	30	30	30	30	30	30	30	60	80	90	80	60	30
	SAT	10	10	10	10	10	30	45	45	45	45	30	30	30	30	30	30	30	30	60	80	90	80	60	30
	Sun	10	10	10	10	10	30	45	45	45	45	30	30	30	30	30	30	30	30	60	80	90	80	60	30
Fans (%)	WD	on	on	on	on	on	on	on	on	on	on	on	on	on	on	on	on	on	on	on	on	on	on	on	on
	SAT	on	on	on	on	on	on	on	on	on	on	on	on	on	on	on	on	on	on	on	on	on	on	on	on
	Sun	on	on	on	on	on	on	on	on	on	on	on	on	on	on	on	on	on	on	on	on	on	on	on	on
Infiltration (%)	WD	100	100	100	100	100	100	100	100	100	100	100	100	100	100	100	100	100	100	100	100	100	100	100	100
	SAT	100	100	100	100	100	100	100	100	100	100	100	100	100	100	100	100	100	100	100	100	100	100	100	100
	Sun	100	100	100	100	100	100	100	100	100	100	100	100	100	100	100	100	100	100	100	100	100	100	100	100
People (%)	WD	90	90	90	90	90	90	70	40	40	20	20	20	20	20	20	30	50	50	50	70	70	80	90	90
	SAT	90	90	90	90	90	90	70	40	40	20	20	20	20	20	20	30	50	50	50	70	70	80	90	90
	Sun	90	90	90	90	90	90	70	40	40	20	20	20	20	20	20	30	50	50	50	70	70	80	90	90
Hot Water (%)	WD	0	0	0	5	5	5	80	70	50	40	25	25	25	25	50	60	70	70	40	25	20	20	5	5
	SAT	0	0	0	5	5	5	80	70	50	40	25	25	25	25	50	60	70	70	40	25	20	20	5	5
	Sun	0	0	0	5	5	5	80	70	50	40	25	25	25	25	50	60	70	70	40	25	20	20	5	5

Table N2-12 – Retail Occupancy Schedules

		Hour																							
		1	2	3	4	5	6	7	8	9	10	11	12	13	14	15	16	17	18	19	20	21	22	23	24
Heating (ºF)	WD	60	60	60	60	60	63	65	68	70	70	70	70	70	70	70	70	70	70	70	65	65	65	65	60
	SAT	60	60	60	60	60	63	65	68	70	70	70	70	70	70	70	70	70	70	70	65	65	65	65	60
	Sun	60	60	60	60	60	63	65	68	70	70	70	70	70	70	70	70	70	70	70	65	65	65	65	60
Cooling (ºF)	WD	80	80	80	80	80	74	74	74	74	74	74	74	74	74	74	74	74	74	74	74	74	74	80	80
	SAT	80	80	80	80	80	74	74	74	74	74	74	74	74	74	74	74	74	74	74	74	74	74	80	80
	Sun	80	80	80	80	80	74	74	74	74	74	74	74	74	74	74	74	74	74	74	74	74	74	80	80
Lights (%)	WD	20	20	20	20	20	30	40	65	90	90	90	90	90	90	90	90	90	90	90	80	65	50	35	25
	SAT	20	20	20	20	20	30	40	65	90	90	90	90	90	90	90	90	90	90	90	80	65	50	35	25
	Sun	20	20	20	20	20	30	40	65	90	90	90	90	90	90	90	90	90	90	90	80	65	50	35	25
Equipment (%)	WD	20	20	20	20	20	25	30	45	60	75	75	75	70	75	75	75	75	75	65	55	45	35	25	20
	SAT	20	20	20	20	20	25	30	45	60	75	75	75	70	75	75	75	75	75	65	55	45	35	25	20
	Sun	20	20	20	20	20	25	30	45	60	75	75	75	70	75	75	75	75	75	65	55	45	35	25	20
Fans (%)	WD	off	off	off	off	off	off	On	on	on	on	on	on	on	on	on	on	on	on	on	on	on	off	off	off
	SAT	off	off	off	off	off	off	On	on	on	on	on	on	on	on	on	on	on	on	on	on	on	off	off	off
	Sun	off	off	off	Off	off	off	On	on	on	on	on	on	on	on	on	on	on	on	on	on	on	off	off	off
Infiltration (%)	WD	100	100	100	100	100	100	0	0	0	0	0	0	0	0	0	0	0	0	0	0	0	100	100	100
	SAT	100	100	100	100	100	100	0	0	0	0	0	0	0	0	0	0	0	0	0	0	0	100	100	100
	Sun	100	100	100	100	100	100	0	0	0	0	0	0	0	0	0	0	0	0	0	0	0	100	100	100
People (%)	WD	05	05	05	05	05	05	15	25	40	55	75	75	75	75	75	75	75	75	65	50	35	20	10	5
	SAT	05	05	05	05	05	05	15	25	40	55	75	75	75	75	75	75	75	75	65	50	35	20	10	5
	Sun	05	05	05	05	05	05	15	25	40	55	75	75	75	75	75	75	75	75	65	50	35	20	10	5
Hot Water (%)	WD	0	0	0	0	0	0	10	10	50	50	70	90	90	50	50	70	50	50	50	10	10	0	0	0
	SAT	0	0	0	0	0	0	10	10	50	50	70	90	90	50	50	70	50	50	50	10	10	0	0	0
	Sun	0	0	0	0	0	0	10	10	50	50	70	90	90	50	50	70	50	50	50	10	10	0	0	0

2.4.3.3 Holiday Schedules

Description	The reference method has Weekdays, Saturdays and Sundays schedules which includes holidays. The 1991 calendar year is a fixed input, with January 1st being a Tuesday and no leap year. The following holidays observed in the simulation:	
	New Year's Day	Tuesday, January 1
	Martin Luther King's Birthday	Monday, January 21
	Washington's Birthday	Monday, February 18
	Memorial Day	Monday, May 27
	Independence Day	Thursday, July 4
	Columbus Day	Monday, October 14
	Veteran's Day	Monday, November 11
	Thanksgiving Day	Thursday, November 28
	Christmas Day	Wednesday, December 25
DOE-2 Command	SCHEDULE	
DOE-2 Keyword(s)		
Input Type	Prescribed	
Tradeoffs	Neutral	
Modeling Rules for Proposed Design:	The proposed design shall use the Sunday occupancy schedule for the above holidays.	
Modeling Rules for Standard Design (All):	The standard design shall use the same schedule as the proposed design.	

2.5 HVAC Systems and Plants

~~ACMs~~Compliance software shall have the capability to accept input for and model various types of HVAC systems. In central systems, these modeling features affect the loads seen by the plant. A key factor related to equipment type is the energy source (electricity, natural gas, or propane). ~~ACMs~~Compliance software shall correctly apply the TDV multiplier from Reference ~~Joint Appendix III~~~~Standards~~ Joint Appendix JA3 for each fuel source, building type and climate zone.

Standard design requirements are labeled as applicable to one of the following options:

- Existing unchanged
- Altered existing
- New
- All of the above

W~~w~~ith the default condition ~~for these four specified conditions~~ being "All of the above." ~~An~~ ~~ACM~~Compliance software without the optional capability of analyzing additions or alterations shall classify and report all HVAC components as "All of the above."

2.5.1 Thermal Zoning

Description: A space or collection of spaces within a building having sufficiently similar space-

	conditioning requirements that those conditions could be maintained with a single controlling device. ~~ACMs~~Compliance software shall accept input for and be capable of modeling a minimum of fifty (50) thermal zones, each with its own control. ~~ACMs~~Compliance software shall also be capable of reporting the number of control points at the building level. When the number of control points is not greater than twenty (20) the ~~ACM~~compliance software shall have one HVAC zone per control point. ~~An ACM~~Compliance software may use zone multipliers for identical zones. When the number of zones exceeds twenty(20), then (and only then) thermal zones may be combined subject to a variety of rules and restrictions. See Chapter 4 for details on restrictions on combining thermal zones and requirements for zoning buildings for which no HVAC permit is sought.
DOE-2 Command	ZONE
DOE-2 Keyword(s)	ZONE-TYPE
Input Type	Prescribed
Tradeoffs	Neutral
Modeling Rules for Proposed Design:	The reference method models thermal zones as input by the user, according to the plans and specifications for the building. If thermal zones can not be determined from the building plans, thermal zones shall be established from guidelines in the ~~ACM~~Compliance Software User's Manual and Help System (see Chapter 4).
Modeling Rules for Standard Design (All):	~~ACMs~~Compliance software shall model the thermal zones of the standard design in the same manner as they are modeled in the proposed design.

2.5.2 Heating & Cooling Equipment

2.5.2.1 Primary Systems

The ~~ACM~~compliance software shall be able to model the following primary systems:

- *Hydronic*. Primary system cooling/heating coil served by a central hydronic system.
- *Electric*. Primary system heating using electric resistance.
- *~~Fossil fuel F~~furnace*. Primary system heating by a furnace using depletable energy sources other than electricity~~fossil fuel fired furnace~~.
- *Heat pump*. Primary system heating provided by compression of a refrigerant.~~direct expansion refrigerant coils served by a heat pump.~~
- *DX (Direct Expansion)*. Primary system where cooling is provided by direct expansion of a~~refrigerant~~ refrigerant.~~coils served by a heat pump or other compression system.~~

2.5.2.2 Cooling Equipment

The ~~ACM~~compliance software ~~Compliance software~~ shall account for variations in cooling equipment efficiency and capacity. ~~ACMs~~Compliance software will be compared to and tested against a reference method that also accounts for variations in efficiency and capacity as a function of part-load ratio and heat transfer fluid (e.g., chilled water, condenser water, outside air for air-cooled systems) temperatures. The ~~ACM~~compliance software user shall be able to explicitly enter equipment type and capacity and standard efficiency ratings (such as SEER and/or EER for packaged equipment).

In certain cases the Standards allow cooling equipment to be installed below the mandatory minimum efficiency ratings listed in the Standards for new currently manufactured equipment, e.g. existing equipment

moved to a new location in the building. If the ~~an ACM~~compliance software allows efficiencies to be entered (optional entry and capability) lower than those indicated in the mandatory features for newly manufactured equipment, then those entries shall also be indicated in the exceptional conditions checklist on the PERF-1 and be justified in writing.

~~ACMs~~Compliance software shall model two fundamental types of cooling equipment:

1. Water chillers. Cooling equipment that chills water to be supplied to building coils.
2. *Direct expansion (DX) compressors.* Cooling systems that directly cool supply air without first cooling a heat transfer medium such as water. See descriptions above for other definitions.

The reference method models part-load performance for at least two different types of water chillers and all ~~ACMs~~c~~C~~ompliance software shall allow the user to select either of these two chiller types:

1. *Centrifugal.* Compression refrigeration system using rotary centrifugal compressor.
2. *Reciprocating.* Compression refrigeration system using reciprocating positive displacement compressor.

2.5.2.3 Heating Equipment

The ~~ACM~~compliance software shall account for variations in heating equipment performance according to efficiency and as a function of load. The user shall be able to explicitly enter equipment type and capacity and rated efficiency (such as AFUE, Steady State Thermal Efficiency or HSPF).

In certain cases the Standards allow heating equipment to be installed below the mandatory minimum efficiency ratings listed in the Standards for new currently manufactured equipment, e.g. existing equipment moved to a new location in the building. If the~~an~~ ~~ACM~~compliance software allows efficiencies to be entered (optional entry and capability) lower than those indicated in the mandatory features for newly manufactured equipment, those entries shall also be indicated in the exceptional conditions checklist on the PERF-1 and be justified in writing.

~~ACMs~~Compliance software shall model three fundamental types of heating equipment:

1. *Furnaces.* The following forced air furnaces shall be provided:
   - *Electric.* Electric resistance elements used as the heating source.
   - *Depletable~~Fossil~~ Fuel*. Natural gas or liquid propane is used as the heating source.
2. *Boilers*. The following capabilities shall be provided for boilers:
   - *Electric*. Boiler uses electric resistance heating.
   - *Fossil Fuel*. Boiler is natural gas or oil fired.
   - *Natural draft*. Fossil fired boiler uses natural draft (atmospheric) venting.
   - *Forced/induced draft*. Fossil fired boiler uses fan forced or induced draft venting. With this option, the ~~ACM~~compliance software shall account for fan energy.
   - *Hot water*. Boiler produces hot water.
3. *Heat Pumps*. Supply air is heated by refrigerant ~~through direct expansion process~~ utilizing electric~~it~~ power~~y~~ ~~as the fuel type~~ and outside air as the heat source.

2.5.2.4 Standard Design Systems

Description: The reference method will assign one of five Standard Design System types for all proposed HVAC systems in order to establish an energy budget for the standard building. This system is generated and modeled for all buildings, even if no mechanical heating or cooling is included in the building permit.

~~ACMs~~Compliance software shall require the user to input the following for each system:

1. **Building Type** - low-rise nonresidential, high-rise nonresidential, residential and hotel/motel guest room
2. **System Type** - single zone, multiple zone
3. **Heating Source** - fossil fuel, electricity
4. **Cooling Source** - hydronic, other (for high-rise residential and hotel/motel guest room, only)

All ~~ACMs~~Compliance software shall accept input for and be able to model the following system types for both the standard and proposed design:

- **System 1**: Packaged Single Zone (PSZ), Gas furnace and electric air conditioner.
- **System 2**: Packaged Single Zone (PHP), Electric heat pump and air conditioner.
- **System 3**: Packaged Variable Air Volume (PVAV), Central gas boiler with hydronic reheat and electric air conditioner.
- **System 4**: Built-up Variable Air Volume (VAV), Central gas boiler with hydronic reheat and central electric chiller with hydronic air conditioning.
- **System 5**: Built-Up Single Zone (BSZ)~~Four-pipe fan coil (FPFC)~~, Central gas boiler and electric chiller serving individual units with hydronic heating and cooling coils.

DOE-2 Command	SYSTEM
DOE-2 Keyword(s)	SYSTEM-TYPE
Input Type	Prescribed
Tradeoffs	N/A
Modeling Rules for Proposed Design:	The proposed system shall be input as it is shown in the construction documents for the building. ~~ACMs~~Compliance software shall receive enough input about the proposed system to: 1) generate the applicable standard design system; 2) apply all required efficiency descriptors to both the standard and proposed designs; and, 3) model the energy use of the proposed design accurately.
Modeling Rules for Standard Design (New):	The standard design system selection is shown in Table N2-13. The reference method chooses the standard HVAC system only from the five minimum systems listed above. The reference method will select its standard system according to Table N2-13, for the standard design system, regardless of the system type chosen for the proposed design. For example, a hydronic heating system served by a gas-fired boiler to supply hot water to the loop for a low-rise nonresidential building is considered a single zone (fan) system with fossil fuel for a heating source, and would be compared to System #1 - a Packaged Single Zone Gas/Electric System. Likewise a gas-fired absorption cooling system with a gas-fired furnace serving a single zone would be compared to System #1 also. Table N2-14 through Table N2-17 describe the five standard design system types.
Modeling Rules for Standard Design (Existing Unchanged & Altered Existing):	The standard design shall model the existing system with its rated efficiency. If the entered efficiency is lower than those indicated in the mandatory features for newly manufactured equipment, then those entries shall also be indicated in the exceptional conditions checklist on the PERF-1 and be noted as existing system.

Table N2-13 – Standard Design HVAC System Selection ~~Flowchart~~

Building Type	System Type	Proposed Design Heating Source	System
Low-Rise Nonresidential (three or fewer stories above grade)	Single Zone	Fossil	System 1 – Packaged Single Zone, Gas/Electric
		Electric	System 2 – Packaged Single Zone, Heat Pump
	Multiple Zone	Any	System 3 – Packaged VAV, Gas Boiler with Reheat
High Rise Nonresidential (four or more stories)	Single Zone	Any	System 5 – Built-up Single Zone System ~~Four Pipe Fan Coil System~~ with Central Plant
	Multiple Zone	Any	System 4 – Central VAV, Gas Boiler with Reheat
All Residential including ~~&~~ Hotel/Motel Guest Room	Hydronic	Any	System 5 – Four Pipe Fan Coil System with Central Plant
	Other	Fossil	System 1 (No economizer) – Packaged Single Zone, Gas/Electric
		Electric	System 2 (No economizer) – Packaged Single Zone, Heat Pump

Table N2-14 – System #1 and System #2 Descriptions

System Description:	Packaged Single Zone with Gas Furnace/Electric Air Conditioning (#1) or Heat Pump (#2)
Supply Fan Power:	See Section 2.5.3.5
Supply Fan Control:	
	Constant volume < 10 tons proposed cooling capacity
	~~–~~Variable Volume with 2 speed motor > 10 tons proposed capacity 7
Min Supply Temp:	50 ≤ T ≤ 60 DEFAULT: 55
Cooling System:	Direct expansion (DX)
Cooling Efficiency:	Minimum SEER or EER based on equipment type and output capacity of proposed unit(s). Adjusted EER is calculated to account for supply fan energy.
Maximum Supply Temp:	85 ≤ T ≤ 110 DEFAULT: 100
Heating System:	Gas furnace (#1) or heat pump (#2)
Heating Efficiency:	Minimum AFUE, Thermal Efficiency, COP or HSPF based on equipment type and output capacity of proposed unit(s).
Economizer:	Integrated ~~dry-bulb~~drybulb economizer, when mechanical cooling output capacity of the proposed design as modeled in the compliance run by the ~~ACM~~compliance software is over 75,000 Btu/hr and fan system volumetric capacity of the proposed design as modeled in the compliance run by the ~~ACM~~compliance software is over 2500 cfm
Ducts:	For ducts installed in unconditioned buffer spaces or outdoors as specified in ~~Section~~§ 144(k)~~ of the Standards~~, the duct system efficiency shall be as described in Section 2.5.3.18.

Table N2-15 – System #3 Description

System Description:	Packaged VAV with Boiler and Reheat
Supply Fan Power:	See Section 2.5.3.5
Supply Fan Control:	Individual VAV supply fan with less than 10 horsepower: VAV - forward curved fan with discharge damper Individual VAV supply fan greater than or equal to 10~~ten~~ horsepower: VAV - variable speed drive
Return Fan Control:	Same as supply fan
Minimum Supply Temp:	50 ≤ T ≤ 60 DEFAULT: 55
Cooling System:	Direct expansion (DX)
Cooling Efficiency:	Minimum efficiency based on average proposed output capacity of equipment unit(s)
Maximum Supply Temp:	90 ≤ T ≤ 110 DEFAULT: 105
Heating System:	Gas boiler
Hot Water Pumping System	Variable flow (2-way valves) riding the pump curve
Heating Efficiency:	Minimum efficiency based on average proposed output capacity of equipment unit(s)
Economizer:	Integrated ~~dry-bulb~~dry bulb economizer, when mechanical cooling output capacity of the proposed design as modeled in the compliance run by the ~~ACM~~compliance software is over 75,000 Btu/hr and fan system volumetric capacity of the proposed design as modeled in the compliance run by the ~~ACM~~compliance software is over 2500 cfm

Table N2-16 – System #4 Description

System Description:	Chilled Water VAV With Reheat
Supply Fan Power:	See Section 2.5.3.5
Supply Fan Control:	Individual VAV supply fan with less than 10 horsepower:: VAV - forward curved fan with discharge damper Individual VAV supply fan with greater than or equal to 10 horsepower: VAV - variable speed drive
Return Fan Control:	Same as supply fan
Minimum Supply Temp:	50 ≤ T ≤ 60 DEFAULT: 55
Cooling System:	Chilled water
Chilled Water Pumping System	Variable flow (2-way valves) with a VSD on the pump if three or more fan coils or air handlers. Constant volume flow with water temperature reset control if less than three fan coils or air handlers. Reset supply pressure by demand if proposed system has DDC controls.8
Cooling Efficiency:	Minimum efficiency based on average proposed output capacity of equipment unit(s)
Maximum Supply Temp:	90 ≤ T ≤ 110 DEFAULT: 105
Heating System:	Gas boiler
Hot Water Pumping System	Variable flow (2-way valves) riding the pump curve if three or more fan coils or air handlers. Constant volume flow with water temperature reset control if less than three fan coils or air handlers. Reset supply pressure by demand if proposed system has DDC controls.
Heating Efficiency:	Minimum efficiency based on average proposed output capacity of equipment unit(s)
Economizer:	Integrated ~~dry-bulb~~dry bulb economizer, when mechanical cooling output capacity of the proposed design as modeled in the compliance run by the ~~ACM~~compliance software is over 75,000 Btu/hr and fan system volumetric capacity of the proposed design as modeled in the compliance run by the ~~ACM~~compliance software is over 2500 cfm

Table N2-17 – System #5 Description

System Description:	Four-Pipe Fan Coil With Central Plant
Supply Fan Power:	See Section 2.5.3.5
Minimum Supply Temp:	50 ≤ T ≤ 60 DEFAULT: 55
Cooling System:	Chilled water
Chilled Water Pumping System	Variable flow (2-way valves) with a VSD on the pump if three or more fan coils. Constant volume flow with water temperature reset control if less than three fan coils. Reset supply pressure by demand if proposed system has DDC controls.
Cooling Efficiency:	Minimum efficiency based on the proposed output capacity of specific equipment unit(s)
Maximum Supply Temp:	90 ≤ T ≤ 110 DEFAULT: 100
Heating System:	Gas boiler
Hot Water Pumping System	Variable flow (2-way valves) riding the pump curve if three or more fan coils. Constant volume flow with water temperature reset control if less than three fan coils. Reset supply pressure by demand if proposed system has DDC controls.
Heating Efficiency:	Minimum efficiency based on the proposed output capacity of specific equipment unit(s)
Economizer:	Integrated ~~dry bulb~~dry bulb economizer, when mechanical cooling output capacity of the proposed design as modeled in the compliance run by the ~~ACM~~compliance software is over 75,000 Btu/hr and fan system volumetric capacity of the proposed design as modeled in the compliance run by the ~~ACM~~compliance software is over 2500 cfm

2.5.2.5 Combining Like Systems

Description:	When several similar thermal zones with similar heating/cooling units are combined (see Section 4.3.6.19 for conditions that lead to thermal zones being similar) or similar heating/cooling units with similar controls serve a thermal zone, the ~~ACM~~compliance software may combine the system heating and cooling capacities, supply air flow rates, and fan power for the zone. The ~~ACM~~compliance software shall require the user to input the number of such systems. The ~~ACM~~compliance software shall receive a value for this input for fan systems, packaged heating or cooling equipment, chillers and boilers. If equipment or systems are grouped for modeling purposes, the efficiency of the combined system shall be the weighted average of efficiencies of all systems based on the size of each unit. If the user inputs a value greater than 1 for the number of heating/cooling units, the ~~ACM~~compliance software shall print a warning note in the Special Features section of ~~on~~ the Performance Summary form, PERF-1, indicating that systems of similar type have been modeled as one system and that a prescriptive Mechanical Equipment Summary form, MECH-3, shall be attached documenting each individual system. Refer to Chapter 4, Section 4.3.6.19 for discussion of allowed like system types.
DOE-2 Command	N/A
DOE-2 Keyword(s)	N/A
Input Type	Default
Tradeoffs	N/A
Modeling Rules for Proposed Design:	The reference program may model one heating/cooling unit with heating and cooling capacities, supply air flow rate, and fan power equal to the total capacities, air flow rates, and fan power of the combined systems. The efficiency shall be equal to the capacity weighted average efficiency for the systems being combined.
Default:	One system
Modeling Rules for	The reference program shall model the standard design using Standard Design

Standard Design (All): System types and the applicable capacities, supply air flow rate, fan power, and the minimum efficiency requirements.

2.5.2.6 Equipment Performance of Air Conditioners and Heat Pumps without SEER Ratings

Scope: Air conditioners or heat pumps with a capacity greater than 65,000 Btu/h or 3 phase air conditioners or heat pumps of any capacity~~.~~

Description: The hourly performance of air-to-air air conditioners and heat pumps varies with the outdoor temperature, the loading conditions, the ~~wetbulb~~wetbulb temperature of the air returning to the indoor coil, and other factors. The reference method takes account of these factors through a set of equipment performance curves that modify the efficiency or the capacity of the equipment with changes in part-load ratio, outside dry ~~-~~ bulb temperature and wet~~-~~ bulb temperature of the return air (across the indoor coil).

If custom HVAC performance curves are used, the compliance software shall print a warning note in the Special Features section of the Performance Summary form, PERF-1, indicating that custom HVAC performance curves have been used.

The four reference method performance curves specified here include.

COOL-CAP-FT	Cooling capacity as a function of outdoor ~~dry bulb~~drybulb and return ~~wet bulb~~wetbulb air temperatures.
COOL-EIR-FT	Cooling efficiency as a function of outdoor ~~dry bulb~~drybulb and return ~~wet bulb~~wetbulb temperatures.
HEAT-EIR-FT	Heating efficiency as a function of outdoor ~~dry bulb~~drybulb and return ~~wet bulb~~wetbulb temperatures.
HEAT-CAP-FT	Heating capacity as a function of outdoor ~~dry bulb~~drybulb temperature and the return ~~wet bulb~~wetbulb temperature. This curve adjusts the capacity of the heat pump as the ODB changes. This is an important curve for heat pumps as an electric resistance element comes on to provide heat when the heat pump has inadequate capacity~~.~~
MAX-HP-SUPP-T	This parameter is the outside ~~drybulb~~drybulb temperature below which the heat pump supplemental heating is allowed to operate. This parameter shall be set to 70 ^{o}F.

Other equipment performance curves, such as COOL-EIR-PLR, which are not specified in this manual shall be the default curves defined in DOE-2.1E Reference Manual Supplement, Lawrence Berkeley Laboratory Document #LBL-8706, Rev. 5.

COOL-CAP-FT: The COOL-CAP-FT curve in the reference method adjusts the capacity of the cooling equipment in response to the outdoor ~~drybulb~~drybulb temperature and the ~~wetbulb~~wetbulb temperature of the air returning to the indoor coil.

Equation N2-23 $$\text{COOL-CAP-FT} = a + b * EWB + c * EWB^2 + d * ODB + e * ODB^2 + f * EWB * ODB$$

where:

COOL-CAP-FT =	Normalized cooling capacity of the equipment for the EWB and ODB specified.
EWB =	~~Wet bulb~~Wetbulb temperature of air entering the indoor coil.
ODB =	Outdoor ~~dry bulb~~drybulb temperature.
a, b, c, d, e, f =	Regression constants and coefficients.

COOL-EIR-FT: The COOL-EIR-FT curve adjusts the efficiency of the cooling equipment in response

to the outdoor ~~drybulb~~drybulb temperature and the ~~wetbulb~~wetbulb temperature of the air returning to the indoor coil.

~~Equation N2-10 COOL-EIR-FT = A + b * EWB + c * EWB^2 + d * ODB + e * ODB^2 + f * EWB * ODB~~

Equation N2-24 COOL-EIR-FT = (A + b * EWB + c * EWB^2 + d * ODB + e * ODB^2 + f * EWB * ODB) x F_{FDD} x F_{AIR}

where:

T24-COOL-EIR-FT =	Normalized cooling energy input ratio for Title 24 standards
EWB =	Entering ~~wet bulb~~wetbulb temperature
ODB =	Outdoor ~~dry bulb~~drybulb temperature
a, b, c, d, e, f =	Regression constants and coefficients
F_{FDD} =	performance adjustment factor for fault detection and diagnostics. By default, F_{FDD} = 0.9. If automated fault detection and diagnostics is present, F_{FDD} = 0.95.
F_{AIR} =	airflow performance adjustment factor.

HEAT-EIR-FT

This curve in the reference method adjusts the efficiency of the heating equipment in response to the outdoor ~~drybulb~~drybulb temperature.

Equation N2-25 HEAT-EIR-FT = a + b * ODB + c * ODB^2 + d * ODB^3

where:

T24-HEAT-EIR-FT =	Normalized heating energy input ratio for Title 24 standards
ODB =	Outdoor ~~dry bulb~~drybulb temperature
a, b, c, d =	Regression constants and coefficients

HEAT-CAP-FT

This curve adjusts the capacity of the heat pump in response to the outdoor ~~drybulb~~drybulb temperature. This curve adjusts the capacity of the heat pump as the ODB changes. This is an important curve for heat pumps as an electric resistance element comes on to provide heat when the heat pump has inadequate capacity.

Equation N2-26 HEAT-CAP-FT = a + b * ODB + c * ODB^2 + d * ODB^3

where

HEAT-CAP-FT =	Normalized heating capacity
ODB =	Outdoor ~~dry bulb~~drybulb temperature
a, b, c, d =	Regression constants and coefficients

Default

The default equipment performance curves coefficients are specified in Table N2-18.

Table N2-18 – Default Coefficients for COOL-CAP-FT, COOL-EIR-FT, HEAT-CAP-FT and HEAT-EIR-FT Equations

Coefficient	COOL-CAP-FT	COOL-EIR-FT	HEAT-CAP-FT	HEAT-EIR-FT
a	0.053815799	-0.4354605	0.253761	1.563358292

b	0.02044874	0.0499555	0.010435	0.013068685
c	-1.45568E-05	-0.0004849	0.000186	-0.001047325
d	-0.000891816	-0.011332	-1.50E-06	1.08867E-05
e	-1.22969E-05	0.00013441		
f	-2.61616E-05	0.00002016		

Tradeoffs

Yes for COOL-EIR-FT, COOL-CAP-FT, HEAT-CAP-FT, and HEAT-EIR-FT. Neutral for the part load equipment performance curves.

Input Type

Required.

Proposed Design Modeling Assumptions

For equipment larger than 135,000 Btu/h, the user may enter data on equipment performance as described below. In this case, the ~~ACM~~compliance software shall use the algorithms described below to determine the temperature dependent performance curves for the proposed design equipment. If the user chooses not to enter data on temperature dependent performance, then the defaults shall be used.

For equipment with a capacity less than or equal to 135,000 Btu/h, but larger than 65,000 Btu/h, the user may not enter data on the temperature dependent equipment performance. However, the ~~ACM~~compliance software vendor may work with manufacturers to collection such data and build this data into the ~~ACM~~compliance software. The user may either select equipment for which the ~~ACM~~compliance software vendor has collected or use the defaults.

Standard Design Modeling Assumptions

The standard design equipment uses the default performance curves coefficients specified in Table N2-18.

Algorithms

The reference method shall be able to calculate custom regression coefficients with market data and user-entered data as well as use default coefficients. The default coefficients listed below in Table N2-18 are derived from market data. The method allows the user to enter data for a ~~wet bulb~~wetbulb of 67 degrees, and generates data points at other ~~wet bulb~~wetbulb temperatures by scaling the user-entered data at a given ~~dry bulb~~drybulb temperature by the ~~wet bulb~~wetbulb adjustment predicted by the default performance curve in Table N2-18.

The reference program uses a computer program to calculate custom regression constants and coefficients for the performance curves according to the following rules.

The input data shall have a minimum of 4 full load points for each performance curve analyzed, including the 95 odb/67ewb ARI point.

The user cannot directly modify the curve coefficients.

User Inputs

If non-default values are used for equipment performance, users shall input the gross cooling capacity (GCC) and rated power (PWR) at an entering coil wetbulb temperature of 67 ºF. A minimum of four values shall be entered and one of the values shall be for the ARI rated condition of 95 ºF ODB. The data should be for a nominal fan flow of 400 cfm per ton of rated capacity. The minimum of four data points should include one drybulb temperatures at 85 ºF or lower and one at 115 ºF or higher. The data to be entered are the values in the ~~the~~ shaded areas of Table N2-19. Other blanks in Table N2-19 shall be calculated as described below.

Table N2-19 – Data Input Requirements for Equipment Performance Curves

A Point	B EWB	C ODB	D CAP (Btu/hr)	E PWR (kW)	F EIR	G $NCAP_{ARI}$	H NEIR~~CAP~~$_{ARI}$
1	67						
2	67						
3	67						
4	67						
5	67						
6	62						
7	62						
8	62						
9	62		Not Used				
10	62						
11	72						
12	72						
13	72						
14	72						
15	72						

Calculating EIR (Column F)

The Energy Input Ratio (~~-~~EIR) in column F of Table N2-19 shall be calculated as follows from data in columns D and E as shown in the equation below.

~~Equation N2-13~~

$$\cancel{EIR} = \frac{PWR}{CAP / 3413}$$

Equation N2-27

$$EIR = \frac{PWR}{CAP / 3413 \times F_{FDD} \times F_{AIR}}$$

where

F_{FDD} is a Cooling system performance adjustment factor, default = 0.90. For packaged systems with fault detection and diagnostics (FDD) controls, F_{FDD} shall be 0.95.9

F_{AIR} Airflow adjustment factor. Default cooling air flow shall be assumed in calculations for any system in which the air flow has not been tested, certified and verified. For compliance software energy calculations the F_{air} multiplier shall be set to 0.925 for systems with default cooling air flow. For systems with air flow verified, F_{air} shall be 1.00.

Note that the supply fan power shall not be included in the Power (PWR) term in ~~Equation N2-14~~Equation N2-27. If data from the manufacturers includes the supply fan power, an adjustment may be made using the procedures in Section 2.5.2.7 of this manual. Neither should the PWR term include the condenser fan, however, the calculated EIR will be sufficiently accurate if the condenser fan is included in the calculation. The condenser fan power is not significant for two reasons. First, the compressor power dominates the power requirements of the system, and second, the EIR values are later normalized, i.e. if each EIR value is calculated in a consistent

manner, the ratio will not be significantly affected.

Calculating Normalized Cooling Capacities (Column G)

Inputs to the reference method require a normalized cooling capacity value, which is the ratio of the cooling capacity at a particular combination of ODB and EWB to the capacity at the ARI conditions of 95 ºF ODB and 67 ºF EBT. The normalized capacity is calculated from Equation N2-28. For the ARI rated condition of 95 ºF ODB, this ratio will be one. This calculation is made only for the 67 EWB data points, for which data is entered.

Equation N2-28

$$NCAP_{EWB,ODB} = \frac{CAP_{EWB,ODB}}{CAP_{67,95}}$$

Calculating Normalized Energy Input Ratio (Column H)

Inputs to the reference method require a normalized EIR value, which is the ratio of the EIR at a particular combination of ODB and EWB to the EIR at the ARI conditions of 95 ºF ODB and 67 ºF EBT. The normalized EIR is calculated from Equation N2-29. For the ARI rated condition of 95 ºF ODB, this ratio will be one. This calculation is made only for the 67 EWB data points, for which data is entered.

Equation N2-29

$$NEIR_{EWB,ODB} = \frac{EIR_{EWB,ODB}}{EIR_{67,95}}$$

Creating Data Points for 62 ºF and 72 ºF WBT

Generating the equipment performance curve requires data points for EWB of 62 ºF and 72 ºF. These data points are not entered by the user, but rather are scaled from the default equipment performance curve as shown in the equations below.

Equation N2-30

$$EIRRatio_{EWB,ODB} = EIRRatio_{67,ODB} \times \frac{DefEIRRatio_{EWB,ODB}}{DefEIRRatio_{67,ODB}}$$

Equation N2-31

$$CAPRatio_{EWB,ODB} = CAPRatio_{67,ODB} \times \frac{DefCAPRatio_{EWB,ODB}}{DefCAPRatio_{67,ODB}}$$

Error Checking

Cooling capacity entered for a given ~~wet bulb~~wetbulb temperature shall be monotonically decreasing as ~~dry bulb~~drybulb temperature increases. In addition the energy input ratio (EIR) resulting from the entered data shall be monotonically increasing as ~~dry bulb~~drybulb temperature increases. If either or these conditions are violated, the program shall generate an ERROR message indicating that entered capacity information is in error and will not be used in the simulation.

An ERROR message shall also be generated if the range of outside ~~dry bulb~~drybulb temperatures entered is lower~~higher~~ than 85 ºF or higher~~lower~~ than 115 ºF or if a data point is not entered for 95 ºF outside ~~dry bulb~~drybulb temperature.

The DOE-2 Curve-Fit Function

Once the data in Table N2-19 entered and/or calculated according to the procedures above, the data is then entered in the DOE-2 reference method using the curve fit function. Typical inputs are as described below.

```
COOL-CAP-FT-User =  CURVE-FIT
TYPE             =  BI-QUADRATIC
DATA             =  ( 67,75, NCAP67,75,
                      67,85, NCAP67,85,
                      67,95,1.0,                    $ARI Rated conditions
                      67,105, NCAP67,105,
```

67,115, $NCAP_{67,115}$,
62,75, $NCAP_{62,75}$,
62,85, $NCAP_{62,85}$,
62,95, $NCAP_{62,95}$,
62,105, $NCAP_{62,105}$,
62,115, $NCAP_{62,115}$,
72,75, $NCAP_{72,75}$,
72,85, $NCAP_{72,85}$,
72,95, $NCAP_{72,95}$,
72,105, $NCAP_{72,105}$,
72,115, $NCAP_{72,115}$)

COOL-EIR-FT-User	=	CURVE-FIT	
TYPE	=	BI-QUADRATIC	
DATA	=	(67,75, ~~$NCAP_{67}$~~$NEIR_{67,75}$,	
		67,85, ~~$NCAP_{67}$~~$NEIR_{67,85}$,	
		67,95,1.0,	$ARI Rated conditions
		67,105, ~~$NCAP_{67}$~~$NEIR_{67,105}$,	
		67,115, ~~$NCAP_{67}$~~$NEIR_{67,115}$,	
		62,75, ~~$NCAP_{62}$~~$NEIR_{62,75}$,	
		62,85, ~~$NCAP_{62}$~~$NEIR_{62,85}$,	
		62,95, ~~$NCAP_{62}$~~$NEIR_{62,95}$,	
		62,105, ~~$NCAP_{62}$~~$NEIR_{62,105}$,	
		62,115, ~~$NCAP_{62}$~~$NEIR_{62,115}$,	
		72,75, ~~$NCAP_{72}$~~$NEIR_{72,75}$,	
		72,85, ~~$NCAP_{72}$~~$NEIR_{72,85}$,	
		72,95, ~~$NCAP_{72}$~~$NEIR_{72,95}$,	
		72,105, ~~$NCAP_{72}$~~$NEIR_{72,105}$,	
		72,115, ~~$NCAP_{72}$~~$NEIR_{72,115}$)	

2.5.2.7 Equipment Performance of Air Conditioners with SEER Ratings and Heat Pumps with SEER and HSPF Ratings

Scope

Air conditioners and heat pumps with a capacity of 65,000 Btu/h or less and which are rated by the National Appliance and Energy Conservation Act (NAECA).

Description

The efficiency of NAECA air conditioners depends on the temperature of the outside air and other factors. As the temperature increases, the air conditioner becomes less efficient and it has reduced capacity. Likewise, with electric heat pumps in the heating mode, as the outdoor temperature drops, the efficiency declines and so does the capacity. This section of the ~~ACM~~compliance software manual describes the methods and algorithms used by the reference method to account for these factors.

See the previous section on non-NAECA air conditioners and heat pumps for more general information on equipment performance curves used by the reference method.

Input

~~ACMs~~Compliance software shall require the user to enter the SEER (seasonal energy efficiency ratio). The user may also optionally enter the EER (energy efficiency ratio). ~~ACMs~~Compliance software shall require the user to enter the HSPF (heating seasonal performance factor). The user may also optionally enter the COP

(coefficient of performance) at 47° F and the ~~ACM~~compliance software may allow the user to enter COP 17° F. From these data the reference method determines equipment performance curves.

Proposed Design Modeling Assumptions

The proposed design shall use the SEER and EER and HSPF of the equipment shown on the plans and included in the construction specifications. As an alternative to HSPF, the ~~ACM~~compliance software shall allow the user to enter a COP at 47° F and may allow a user to enter a COP at 17° F. When a user enters HSPF but does not enter COP 47° F and COP 17° F, the ~~ACM~~compliance software shall calculate the COP 47° F and COP 17° F as described for the Standard Design.

Standard Design Modeling Assumptions

The standard design shall use performance curves based on the SEER of the equipment required by the Standards. The default EER, as defined below shall be used. The standard design heat pump shall have an HSPF as required by section 111. The COP at 47° F shall be determined as below. The efficiency at other outdoor temperatures shall be based on the default DOE-2 HEAT-EIR-FT curve.

For single package units and split systems: COP47 = HSPF * 0 28 + 1.13

The standard design shall determine the COP at other outside temperatures from the DOE 2 default curves.

Tradeoffs

Yes for cooling and heat pump efficiency adjustments for ODB. Neutral for other equipment performance curves.

COOL-EIR- FT

This curve explains how the efficiency of the cooling equipment varies with the ODB and the EWB. This curve is derived from entered or default values of SEER and EER, using the procedures below.

The curve is defined as a bi-quadratic with the coefficients in the following BDL.

COOL-EIR- FT =	CURVE-FIT
TYPE =	BI-QUADRATIC
DATA =	(67, 95, 1.0, $ARI Test Conditions
	57, 82, $NEIR_{57,82}$
	57, 95, $NEIR_{57,95}$,
	57,110,$NEIR_{57,110}$,
	67, 82, $NEIR_{67,82}$,
	67,110, $NEIR_{67,110}$,
	77, 82, $NEIR_{77,82}$,
	77, 95, $NEIR_{77,95}$,
	77,110, $NEIR_{77,110}$)
OUTPUT-MIN =	$NEIR_{67,82}$

$NEIR_{WBT,ODB}$ represents the normalized energy input ratio (EIR) for various entering wetbulb (EWB) and outside drybulb (ODB) temperatures. The value represents the EIR at the specified EWB and ODB conditions to the EIR at standard ARI conditions of 67° ºF wetbulb and 95° ºF drybulb. The COOL-EIR-FT curve is normalized at ARI conditions of 67° ºF entering wetbulb and 95° ºF outside drybulb so $NEIR_{67,95}$ is one or unity, by definition. For other EWB and ODB conditions, values of NEIR are calculated with Equation N2-32.

Equation N2-32

$$NEIR_{EWB,ODB} = \frac{EIR_{EWB,ODB}}{EIR_{67,95}}$$

The energy input ratio (EIR) is the unitless ratio of energy input to cooling capacity. EIR includes the compressor and condenser fan, but not the supply fan. If the energy efficiency ratio EERnf (EER excluding the fan energy) is known for a given set of EWB and ODB conditions, the EIR for these same conditions is given by

Equation N2-33 below. The units of EER are (Btu/h)/W.

Equation N2-33

$$EIR_{EWB,ODB} = \frac{3.413}{EERnf_{EWB,ODB}}$$

If the EER (including fan energy) is known for a given set of EWB and ODB conditions, then the EERnf (no fan) can be calculated from Equation N2-34 below.

~~Equation N2-20~~

$$EERnf_{EWB,ODB} = 1.0452 \times EER_{EWB,ODB} + 0.0115 \times EER_{EWB,ODB}^{2} + 0.000251 \times EER_{EWB,ODB}^{3} \times F_{FDD} \times F_{AIR}$$

Equation N2-34

$$EERnf_{EWB,ODB} = (1.0452 \times EER_{EWB,ODB} + 0.0115 \times EER_{EWB,ODB}^{2} + 0.000251 \times EER_{EWB,ODB}^{3}) \times F_{FDD} \times F_{AIR}$$

The EER for different EWB and ODB conditions. These are given by the following equations.

Equation N2-35

$$EER_{67,82} = SEER$$

Equation N2-36

$$\begin{aligned} EER_{67,95} &= \text{From Manufacturers Data} && \text{[when available]} \\ &= 10 - (11.5 - SEER) \times 0.83 && \text{[default for SEER} < 11.5\text{]} \\ &= 10 && \text{[default for SEER} \geq 11.5\text{]} \end{aligned}$$

Equation N2-37

$$EER_{67,110} = EER_{67,95} - 1.8$$

Equation N2-38

$$EER_{57,ODB} = 0.877 \times EER_{67,ODB}$$

Equation N2-39

$$EER_{77,ODB} = 1.11 \times EER_{67,ODB}$$

~~F_{TXV} Refrigerant charge factor, default = 0.9. For systems with a verified TXV or verified refrigerant charge, the factor shall be 0.96.~~

F_{AIR} Airflow adjustment factor. Default cooling air flow shall be assumed in calculations for any system in which the air flow has not been tested, certified and verified. For ~~ACM~~compliance software energy calculations the F_{air} multiplier shall be set to 0.925 for systems with default cooling air flow. For systems with air flow verified, F_{air} shall be 1.00.

F_{FDD} Cooling system performance adjustment factor, default = 0.90. For packaged systems with fault detection and diagnostics (FDD) controls, F_{FDD} shall be 0.95.~~10~~

EERnf Energy Efficiency Ratio at ARI conditions without distribution fan consumption, but adjusted for refrigerant charge and airflow.

COOL-CAP-FT This performance curve explains how the capacity of the cooling equipment varies as a function of the ODB and the EWB. The default curve defined by the curve coefficients in Table N2-18 shall be used for both the standard design and proposed design.

COOL-EIR-FPLR This performance curve explains how the efficiency of the cooling equipment varies with the part load ratio. Since the effects of part load are captured in the COOL-EIR-FT curve, this curve is disabled. The following input is used in the reference method for both the proposed design and the standard design.

T24NAECADEF-COOL-EIR-FPLR = CURVE-FIT
TYPE = LINEAR
COEF = (0,1)

HEAT-EIR-FT For heat pumps, the reference method uses performance curves based on the ratio of the COPs and CAPACITIES at 47°~~º~~F and at 17°~~º~~F (COP_{47}, COP_{17}, CAP_{47}, CAP_{17}) and creates new performance curves, using the following points for ODB and the COPs and CAPACITIES at these temperatures. For single-zone systems with ducts installed in unconditioned buffer spaces or outdoors as specified in ~~Section~~§ 144(k) ~~of the Standards~~ for which the verified sealed duct option has been elected, the HP-EIR-FT shall be divided by the seasonal distribution efficiencies as determined in Section 2.5.3.18.

HP-EIR-FT = CURVE-FIT
TYPE = CUBIC
DATA = (67,0.856)
= (57,0.919)
= (47,1.000)
= (17,COP_{47}/COP_{17})
= (7,1.266×COP_{47}~~47~~/COP_{17}~~17~~)
= (-13, 3.428)

HEAT-CAP-FT This curve adjusts the capacity of the heat pump as the ODB changes. This is an important curve for heat pumps as an electric resistance element comes on to provide heat when the heat pump has inadequate capacity.

HP-CAP-FT = CURVE-FIT
TYPE = CUBIC
DATA = (67,1.337)
= (57,1.175)
= (47,1.000)
= (17,CAP_{17}/CAP_{47})
= (7,0.702×CAP_{17}/CAP_{47})
= (-13, 0.153)

MAX-HP-SUPP-T This parameter is the outside drybulb temperature below which the heat pump supplemental heating is allowed to operate. This parameter shall be set to 70°~~º~~F.

2.5.2.8 Efficiency of Cooling Equipment Included in Built-up Systems

Description ~~ACMs~~Compliance software shall require the user to input: (1) the type of central cooling plant equipment proposed (e.g. open centrifugal, open reciprocating, water

	chiller, direct expansion, etc.); (2) the number of central cooling units and the capacity of each unit; (3) the efficiency of each central cooling unit; and (4) the type of refrigerant to be used in each central cooling unit. ~~ACMs~~Compliance software shall not accept user-defined performance curves for any equipment except for electric chillers.
DOE-2 Command	
DOE-2 Keyword(s)	COOLING-EIR
Input Type	Default
Tradeoffs	Yes
Modeling Rules for Proposed Design:	The ~~ACM~~compliance software shall require the user to input efficiency descriptors at ARI test conditions for all equipment documented in plans and specifications for the building.
Default:	Minimum efficiency as specified in the Appliance Efficiency Regulations or Tables 112-A through 112-E of the Building Energy Efficiency Standards.
Modeling Rules for Standard Design (New):	Based on the capacity and type of chiller(s) the reference method assigns the EER of each unit of the standard design according to the applicable requirements of the Appliance Efficiency Regulations~~Standards~~ or the Standards.
Modeling Rules for Standard Design (Existing Unchanged & Altered Existing):	~~ACMs~~Compliance software shall use the EER and the ARI fan power of the existing system.

2.5.2.9 Heating Efficiency of Heat Pumps with Ratings Other than HSPF

Scope	This section applies to heat pumps that have a cooling capacity larger than 65,000 Btu/h or 3 phase heat pumps for which there is neither a SEER or HSPF rating.
Description	~~ACMs~~Compliance software shall require the user to input the COP for all packaged heat pump equipment with fans that are not covered by DOE appliance standards. ~~ACMs~~Compliance software shall also require the user to input the net heating capacity, $HCAP_a$, at ARI conditions for all equipment. The reference method calculates the electrical heating input ratio, HIR, according to the following equation: Equation N2-40 $$HIR = \frac{[HCAP_a / (COP \times 3.413)] - ARIFanPower}{(HCAP_a / 3.413) - ARIFanPower}$$ For single-zone systems with ducts installed in unconditioned buffer spaces or outdoors as specified in ~~Section~~§ 144(k)~~ of the Standards~~, the HEATING-HIR shall be divided by the seasonal distribution efficiencies as determined in Section 2.5.2.18.
DOE-2 Command	
DOE-2 Keyword(s)	HEATING-HIR
Input Type	Default
Tradeoffs	Yes
Modeling Rules for Proposed Design:	The ~~ACM~~compliance software shall require the user to input efficiency descriptors as they occur in the construction documents.

Default:	Minimum COP as specified in either the Appliance Efficiency Regulations or Table 112-B of the Building Energy Efficiency Standards.
Modeling Rules for Standard Design (New):	For the reference method, the HIR of each unit in the standard design is determined according to the applicable requirements of the Appliance Efficiency Regulations~~Standards~~ or the Standards.
Modeling Rules for Standard Design (Existing Unchanged & Altered Existing):	~~ACMs~~Compliance software shall determine the HIR of each existing system using the COP and the ARI fan power of the existing system.

2.5.2.10 Heating Efficiency of Fan Type Central Furnaces with AFUE Ratings

Description

~~ACMs~~Compliance software shall require the user to input: (1) the AFUE; (2) the heating capacity; and (3) the system configuration for all fan type central furnaces that are rated with AFUE in the Appliance Efficiency Regulations~~Standards~~.

The reference method calculates an equivalent heating input ratio, HIR, according to the following:

a) For single package units:

Equation N2-41

$$HIR = (0.005163 \times AFUE + 0.4033)^{-1}$$

b) For split systems with AFUEs not greater than 83.5:

Equation N2-42

$$HIR = (0.002907 \times AFUE + 0.5787)^{-1}$$

c) For split systems with AFUEs greater than 83.5:

Equation N2-43

$$HIR = (0.011116 \times AFUE - 0.098185)^{-1}$$

For single-zone systems with ducts installed in spaces between insulated ceilings and roofs or building exteriors for which the verified sealed duct option has been elected, the HEATING-HIR shall be divided by the seasonal efficiencies as determined in Section 2.5.2.9~~35~~.

DOE-2 Command	
DOE-2 Keyword(s)	HEATING-HIR
Input Type	Default
Tradeoffs	Yes
Modeling Rules for Proposed Design:	~~ACMs~~Compliance software shall require the user to input the AFUE of each DOE covered central furnace.
Default:	Minimum AFUE as specified in the Appliance Efficiency Regulations
Modeling Rules for Standard Design (New):	The reference method assigns an HIR of 1.24 to all standard design heating systems when a fan-type central furnace is the proposed heating system.
Modeling Rules for Standard Design (Existing Unchanged & Altered Existing):	~~ACMs~~Compliance software shall determine the HIR of each existing system using the AFUE of the existing system.

2.5.2.11 Heating Efficiency Fan Type Central Furnaces with Ratings Other than AFUE

Description:	The ~~ACM~~compliance software shall require the user to input the steady state efficiency, or the HIR, of each furnace for each furnace's rated capacity. For single-zone systems with ducts installed in unconditioned ~~buffer~~ spaces or outdoors as specified in ~~Section~~§ 144(k)~~ of the Standards~~, the HEATING-HIR shall be divided by the seasonal distribution efficiencies as determined in Section 2.5.3.9~~18~~.
DOE-2 Command	
DOE-2 Keyword(s)	HEATING-HIR
Input Type	Default
Tradeoffs	Yes
Modeling Rules for Proposed Design:	The ~~ACM~~compliance software shall require the user to input efficiency descriptors as they occur in the construction documents.
Default:	Minimum Thermal Efficiency or Combustion Efficiency as specified in either the Appliance Efficiency Regulations. ~~or Table 112-F of the Building Energy Efficiency Standards.~~
Modeling Rules for Standard Design (New):	The standard design shall assign the HIR of each unit according to the applicable requirements of the Standards.
Modeling Rules for Standard Design (Existing Unchanged & Altered Existing):	~~ACMs~~Compliance software shall determine the HIR of each existing system using the AFUE of the existing system.

2.5.2.12 Efficiency of Boilers

Description: ~~ACMs~~Compliance software shall require the user to input: (1) the type of central boiler proposed (steam or water, forced or induced draft, etc); (2) the number of central boilers and the capacity of each unit; (3) the heating input ratio of each boiler; and (4) the type of primary fuel used in each boiler. ~~ACMs~~Compliance software shall use the same boiler part-load curve for the proposed and standard designs. The reference method uses the DOE 2.1E default part-load curves for boilers. ~~ACMs~~Compliance software are not allowed to accept user-defined part-load curves for boilers.

~~ACMs~~Compliance software shall calculate an equivalent heating input ratio, HIR, according to the following:

a) 75 ≤ AFUE < 80

Equation N2-44

$$HIR = \frac{1}{(0.1 \times AFUE + 72.5)} \times 100$$

b) 80 ≤ AFUE < 100

c) Boilers with Thermal Efficiency (Et). HIR for boilers is determined by dividing the thermal efficiency Et into 1.

Equation N2-45

$$HIR = \frac{1}{(0.875 \times AFUE + 10.5)} \times 100$$ ~~$HIR = (0.875 \times AFUE + 10.5)^{-1} \times 100$~~

DOE-2 Input Type	
DOE-2 Tradeoffs	BOILER-HIR
	Default
	Yes
Modeling Rules for Proposed Design:	The reference method converts, to an HIR, the user input AFUE as documented in the plans and specifications for the building.
Default:	Minimum AFUE as specified in the Appliance Efficiency Regulations
Modeling Rules for Standard Design (New):	The standard design shall assign the HIR of each unit according to the applicable requirements of the Standards.
Modeling Rules for Standard Design (Existing Unchanged & Altered Existing):	~~ACMs~~Compliance software shall determine the HIR of each existing system using the AFUE of the existing system.

2.5.2.13 Air-Cooled Condensers

The reference method shall model air-cooled condensers as integral to the cooling plant equipment specified. Direct expansion compressors with air-cooled condensers shall include the EIR of the condenser with the EIR of the compressor. Air-cooled water chillers shall include the EIR of the condenser with the EIR of the chiller.

2.5.2.14 Calculating EIR for Packaged Equipment

The EIR shall be calculated according to Equation N2-46, except when supply/return fan heat is excluded by the manufacturer when calculating the EER. In that case, the EER shall be calculated according to the following equation:

Equation N2-46

$$EIR_a = \frac{(CAP_a / EER)}{(CAP_a / 3.413) + ARIFanPower}$$

Refer to Section 2.5.3.13~~-4~~ (Chiller Characteristics) for modeling rules for air-cooled chillers.

2.5.2.15 Electric Motor Efficiency

Description

The full-load efficiency of the electric motor established in accordance with NEMA Standard MG1-1998 (Rev. 2). The standard design shall use the minimum nominal full-load efficiency shown in Table N2-17. For systems with multiple motors, the reference program combines the mechanical efficiencies as the horsepower weighted average, as follows:

~~Equation N2-32~~

$$\cancel{MEFF_{combine} = \frac{\sum_{i=1}^{n} (HP_i \times MEFF_i)}{\sum_{i=1}^{n} HP_i}}$$

Equation N2-47

$$MEFF_{combine} = \frac{\sum_{i=1}^{n} HP_i}{\sum_{i=1}^{n} HP_i / MEFF_i}$$

where

$MEFF_{combine}$ = Combined mechanical efficiency

$MEFF_i$ = Mechanical efficiency of the ith motor

HP_i = Horsepower of the ith motor

n = Total number of motors being combined

DOE-2 Keyword(s)	SUPPLY-MECH-EFF RETURN-EFF
Input Type	Default
Tradeoffs	Yes
Modeling Rules for Proposed Design:	The ~~ACM~~compliance software shall require the user to input the full-load efficiency for all electric motors used for HVAC and service hot water that are documented in the plans and specifications for the building as established in accordance with NEMA Standard MG1-~~1998 (Rev. 2)~~2006.
Default:	Standard motor efficiency from Table N2-20.
Modeling Rules for Standard Design (New):	The standard design shall use the appropriate minimum efficiency values from Table N2-20.
Modeling Rules for Standard Design (Existing Unchanged & Altered Existing):	The standard design shall use the full-load efficiency of existing electric motors as established in accordance with NEMA Standard MG1-~~1998~~ 2006 ~~(Rev. 2)N~~. If the efficiency of the existing motor is not available the standard design shall use the default motor efficiency from Table N2-20.

Table N2-20 – Minimum Nominal Efficiency for Electric Motors (%)

Motor Horsepower	Open Motors				Enclosed Motors			
	2 poles 3600 rpm	4 poles 1800 rpm	6 poles 1200 rpm	8 poles 900 rpm	2 poles 3600 rpm	4 poles 1800 rpm	6 poles 1200 rpm	8 poles 900 rpm
1	-	82.5	80.0	74.0	75.5	82.5	80.0	74.0
1.5	82.5	84.0	84.0	75.5	82.5	84.0	85.5	77.0
2	84.0	84.0	85.5	85.5	84.0	84.0	86.5	82.5
3	84.0	86.5	86.5	86.5	85.5	87.5	87.5	84.0
5	85.5	87.5	87.5	87.5	87.5	87.5	87.5	85.5
7.5	87.5	88.5	88.5	88.5	88.5	89.5	89.5	85.5
10	88.5	89.5	90.2	89.5	89.5	89.5	89.5	88.5
15	89.5	91.0	90.2	89.5	90.2	91.0	90.2	88.5
20	90.2	91.0	91.0	90.2	90.2	91.0	90.2	89.5
25	91.0	91.7	91.7	90.2	91.0	92.4	91.7	89.5
30	91.0	92.4	92.4	91.0	91.0	92.4	91.7	91.0
40	91.7	93.0	93.0	91.0	91.7	93.0	93.0	91.0
50	92.4	93.0	93.0	91.7	92.4	93.0	93.0	91.7
60	93.0	93.6	93.6	92.4	93.0	93.6	93.6	91.7
75	93.0	94.1	93.6	93.6	93.0	94.1	93.6	93.0
100	93.0	94.1	94.1	93.6	93.6	94.5	94.1	93.0
125	93.6	94.5	94.1	93.6	94.5	94.5	94.1	93.6
150	93.6	95.0	94.5	93.6	94.5	95.0	95.0	93.6
200	94.5	95.0	94.5	93.6	95.0	95.0	95.0	94.1
250	94.5	95.0	95.4	94.5	95.4	95.0	95.0	94.5
300	95.0	95.4	95.4	-	95.4	95.4	95.0	-
350	95.0	95.4	95.4	-	95.4	95.4	95.0	-
400	95.4	95.4	-	-	95.4	95.4	-	-
450	95.8	95.8	-	-	95.4	95.4	-	-
500	95.8	95.8	-	-	95.4	95.8	-	-

2.5.3 Air Distribution Systems

2.5.3.1 ARI Fan Power

The *ARI Fan Power* is required to calculate the electrical input ratios (EIR) described above. The reference method determines the *ARI Fan Power* for systems 1, 2 and 3 by assuming that the *ARI Fan Power* is fixed at **365 watts per 1000 cfm with supply air flow rate fixed at 400 cfm per 12,000 Btu/h cooling capacity**.

2.5.3.2 Fan System Configuration

Description: ~~ACMs~~Compliance software shall model the configuration of fan systems as described below.

DOE-2 Command

DOE-2 Keyword(s) FAN-PLACEMENT
MOTOR-PLACEMENT

Input Type Prescribed

Tradeoffs N/A

Modeling Rules for Proposed Design:

- Same specifications as the standard design.

Modeling Rules for Standard Design (All):

The proposed design system shall assume the following:

- For systems 1 through 4, all supply fans shall be "draw-through" type, positioned downstream from all heating and cooling sources.
- For system 5, the supply fan shall be a "blow-through-" type, positioned upstream from heating and cooling sources.
- ~~ACMs~~Compliance software may combine return fans with the supply fan if and only if the controls are of the same type. For example, ~~ACMs~~Compliance software may combine fans if they all have variable speed drive control or if they all are constant volume fans.
- Return fans are those that are required to operate at design conditions to draw air from conditioned zones and can either return that air back to the source (the intake of the supply fan system) or exhaust it to the outdoors. Exhaust fans that are manually switched or controlled by occupant sensors such as bathroom fans shall not be included in the fan model.

All fan motor heat shall be rejected to the supply air stream.

2.5.3.3 Fan System Operation

Description:

Operating schedule of fan systems are in the standard schedules. Fan systems shall operate continuously (turned on) during scheduled operation hours for all occupancy types **except** for the residential units of high-rise residential buildings and hotel/motel guest rooms. In these occupancies, the user may model the fan operation either as *continuous* or *intermittent*. For continuous fan operation, the fan operates during scheduled operation hours regardless of whether heating or cooling is needed.

DOE-2 Command

DOE-2 Keyword(s)

FAN-SCHEDULE
INDOOR-FAN-MODE
NIGHT-CYCLE-CONTROL

Input Type

Default

Tradeoffs

Neutral

Modeling Rules for Proposed Design:

~~ACMs~~Compliance software shall model the fan operation as *continuous* for all occupancy types during scheduled operation hours except for the residential units of high-rise residential buildings and hotel/motel guest rooms. For these occupancies, ~~ACMs~~Compliance software may ~~shall~~ accept input for the type of fan operation (*continuous* or *intermittent)*. For intermittent fan operation, the fan operates only when heating or cooling is needed. The DOE-2 Keyword for intermittent fan operation is:

INDOOR-FAN-MODE = INTERMITTENT

The DOE-2 Keyword for continuous fan operation is:

INDOOR-FAN-MODE = CONTINUOUS

Default:

INDOOR-FAN-MODE = CONTINUOUS

Modeling Rules for Standard Design (All):

Standard design fan system operation shall be identical to the proposed design except when the user specifies electric resistance heating without a fan system for residential units of high-rise residential buildings and hotel/motel guest rooms. In

such cases the standard design fan operation shall be *intermittent*.

2.5.3.4 Fan Volume Control

Description: ~~ACMs~~Compliance software shall be capable of modeling different types of supply and return fans for standard design systems 3 and 4. Modeling shall account for the part-load-ratio of the fan, which is the ratio of supply air rate at any given flow to the supply air rate at design flow (maximum flow). All ~~ACMs~~Compliance software that explicitly model variable air volume HVAC systems shall require the user to input the type of fan volume control for each supply/return fan combination in the proposed design. Minimum required fan volume controls and associated part-load-curves are given below in the form of DOE 2.1 curve-fit instructions.

DOE-2 Curve-Fit for Constant Volume: Fan supplies a constant volume of air at constant power draw whenever it is in operation. This fan control does not have a part-load-curve.

DOE-2 Curve-Fit for Forward Curved Centrifugal Fan with Discharge Dampers: Variable volume fan with static pressure control dampers at the fan outlet or with no direct static pressure control.

```
FC-FAN-W/DAMPERS  =  CURVE-FIT
TYPE              =  QUADRATIC
OUTPUT-MIN        =  0.22
DATA              =  (.0,1.0)
                     (0.9,0.88)
                     (0.8,0.75)
                     (0.7,0.66)
                     (0.6,0.55)
                     (0.5,0.47)
                     (0.4,0.40)
                     (0.3,0.33)
                     (0.2,0.27)
```

Variable volume fan with static pressure flow controlled by vanes at the fan inlet.

```
FC-FAN-W/VANES    =  CURVE-FIT
TYPE              =  QUADRATIC
OUTPUT-MIN        =  0.22
DATA              =  (1.0,1.0)
                     (0.9,0.78)
                     (0.8,0.60)
                     (0.7,0.48)
                     (0.6,0.38)
                     (0.5,0.29)
                     (0.4,0.24)
                     (0.3,0.23)
                     (0.2,0.22)
```

DOE-2 Curve Fit for: Fan is controlled by variable inlet vanes.

Air foil Centrifugal Fan with Inlet Vanes	AF-FAN-W/VANES	=	CURVE-FIT
	TYPE	=	QUADRATIC
	OUTPUT-MIN	=	0.48
	DATA	=	(1.0,1.0)
		=	(0.9,0.83)
		=	(0.8,0.71)
		=	(0.7,0.66)
		=	(0.6,0.60)
		=	(0.5,0.55)
		=	(0.4,0.52)
		=	(0.3,0.48)

DOE-2 Curve Fit for Variable Speed Drive

Variable volume fan of any type with static pressure control by an AC frequency ~~inverter~~ inverter varying fan speed.

ANY-FAN-W/VSD	=	CURVE-FIT
TYPE	=	QUADRATIC
OUTPUT-MIN	=	0.10
DATA	=	(1.0,1.0)
	=	(0.9,0.78)
	=	(0.8,0.57)
	=	(0.7,0.40)
	=	(0.6,0.29)
	=	(0.5,0.20)
	=	(0.4,0.15)
	=	(0.3,0.11)
	=	(0.2,0.10)

DOE-2 Command	SYSTEM
DOE-2 Keyword(s)	FAN-CONTROL
Input Type	Prescribed
Tradeoffs	N/A
Modeling Rules for Proposed Design:	The ~~ACM~~compliance software shall model the same fan volume control for proposed systems as documented in the plans and specifications for the building. The user may not enter part-load curves for fans or other HVAC equipment.
Modeling Rules for Standard Design (New):	~~ACMs~~Compliance software shall assume a *variable speed drive* for fan volume control for each proposed fan in standard design systems 3 and 4 when the fan motor is greater than 10 horsepower. For systems 1, 2, and 5, ~~ACMs~~Compliance software shall assume the same fan volume control as the proposed design.
Modeling Rules for Standard Design	~~ACMs~~Compliance software shall use the existing fan volume control for the standard design.

(Existing Unchanged
& Altered Existing):

2.5.3.5 Fan Power

Description

~~ACMs~~Compliance software shall model all HVAC fans in the system that are required to operate at design conditions. These include supply fans, exhaust fans (that operate during peak), return fans, relief fans, and fan power terminal units (either series or parallel). The reference program models the fan system power demand using the fan power index (FPI). Fan power index is defined as the power consumption of the fan system divided by the volume of air moved (W/cfm).

For each fan that operates during normal HVAC operation (except for the fan-coil system serving the residential unit of a high-rise residential building or a hotel/motel guest room), ~~ACMs~~Compliance software shall require the user to input: 1) the design BHP; 2) the design drive motor efficiency; and, 3) the design motor efficiency, all at peak design air flow rates. Exhaust fans that are manually controlled (such as bathroom fans) may not operate at design conditions and therefore shall **not** be included in the fan system power demand calculations.

The reference method calculates the FPI for each fan system according to the following equation:

Equation N2-48

$$FPI = \frac{746}{CFM_s}\left[\frac{BHP_s}{\eta_{ds} \times \eta_{ms}} + \frac{BHP_r}{\eta_{dr} \times \eta_{mr}} + \frac{BHP_o}{\eta_{do} \times \eta_{mo}}\right]$$

where:

FPI	=	fan power index, [W/cfm]
CFM_S	=	peak supply air flow rate, [ft³/min]
BHP_S	=	brake horsepower of supply fan at CFM_S [hp]
BHP_r	=	brake horsepower of return fan at CFM_S [hp]
BHP_O	=	brake horsepower of other fans at CFM_S [hp]
η_{ms}	=	supply motor efficiency [unitless]
η_{mr}	=	return motor efficiency [unitless]
η_{mo}	=	other motor efficiency [unitless]
η_{ds}	=	supply drive efficiency [unitless]
η_{dr}	=	return drive efficiency [unitless]
η_{mo}	=	other drive efficiency [unitless]

If the user does not input the design brake horsepower (BHP) and the peak supply air flow rate (cfm) for forced air systems, the ~~ACM~~compliance software shall assume that no mechanical compliance will be performed and shall model the default mechanical system according to the rules in Section 2.5.3.9 (modeling default heating and cooling systems).

DOE Keywords: SUPPLY-kW
SUPPLY-DELTA-T

	RETURN-kW RETURN-DELTA-T
Input Type:	Required
Tradeoffs:	Yes
Modeling Rules for Proposed Design:	All ~~ACMs~~Compliance software shall model proposed system fan power as documented in the plans and specifications for the building. The proposed design shall use the fan motor efficiency established in accordance with NEMA Standards MG1-~~1998 (Rev. 2)~~2006. System fan power shall include all fans that operate during peak cooling conditions, including fans in terminal units. For ECM motors in series fan powered terminal units with systems 3 or 4, the modeled power shall be 50 percent~~%~~ of the maximum rated power. Standard motors in series fan powered terminal units shall be modeled at 100 percent~~%~~ of the maximum rated power. Qualifying ECM motors shall have a motor efficiency of at least 70 percent~~%~~ when rated with NEMA Standard MG-1-1998 ~~(Rev. 2)~~2006.
Modeling Rules for Standard Design (New):	The reference method determines the standard design fan power as follows: a) For systems 1, 2, and 5 with proposed FPI ≤ 0.80: The standard design FPI shall be the same as the proposed design. b) For systems 1, 2 and 5 with~~and~~ proposed FPI > 0.80: The standard design FPI shall be 0.80. c) For systems 3 and 4 with proposed FPI < 80: The standard design FPI shall be 0.80. d) For systems 3 and 4 with proposed FPI ≥ 0.80 but < 1.25: The standard design FPI shall be the same as the proposed design. e) ~~c)For systems 3 and 4 and proposed FPI ≤ 1.25: The standard design FPI shall be the same as the proposed design.~~ f) For systems 3 and 4 and proposed FPI > 1.25: The standard design FPI shall be 1.25. The reference method shall use the appropriate minimum nominal full-load motor efficiency from Table N2-20.
Modeling Rules for Standard Design (Existing Unchanged & Altered Existing):	All ~~ACMs~~Compliance software shall model the existing system fan power according to the specifications of the existing system. The reference method shall use the full-load nominal efficiency of the existing motor as established in accordance with NEMA Standard MG1. If the efficiency of the existing motor is not available, ~~ACMs~~Compliance software shall use the appropriate minimum nominal full-load motor efficiency from Table N2-20.

2.5.3.6 Process Fan Power

The portion of the total fan power exclusively used for air treatment or filtering systems. For each fan system used for air treatment or filtering, ~~ACMs~~Compliance software shall adjust the fan power index according to the following equation:

Equation N2-49 $$\text{Adjusted Fan Power Index (FPI)} = \text{Total FPI} \times (1 - (SP_a - 1)/SP_f)$$

where:

SP_a = Air pressure drop across air treatment or filtering system in inches of water, and

SP_f = Total pressure drop across the fan system in inches of water

Fans whose fan power exclusively serve as process fans shall not be modeled for simulation.

2.5.3.7 Air Economizers

Description:	The reference method is capable of simulating an economizer that: (1) modulates outside air and return rates to supply up to 100 percent~~%~~ of design supply air quantity as outside air; and, (2) modulates to a fixed position at which the minimum ventilation air is supplied when the economizer is not in operation. The reference method will simulate at least two types of economizers and all ~~ACMs~~Compliance software shall receive input for these two types of economizers: 1. *Integrated*. The economizer is capable of providing partial cooling, even when additional mechanical cooling is required to meet the remainder of the cooling load. The economizer is shut off when outside air temperature or enthalpy is greater than a fixed setpoint. 2. *Nonintegrated/fixed set point.* This strategy allows only the economizer to operate below a fixed outside air temperature set point. Above that set point, only the compressor can provide cooling.
DOE-2 Keyword(s)	ECONO-LIMIT ECONO-LOCKOUT ECONO-LOW-LIMIT
Input Type	Default
Tradeoffs	Yes
Modeling Rules for Proposed Design:	The ~~ACM~~compliance software shall allow the user to input either an *integrated* or *non-integrated* economizer as described above as it occurs in the construction documents. The ~~ACM~~compliance software shall require the user to input the ODB set point. For systems with economizers, the maximum outside air fraction (keyword MAX-OA-FRACTION) shall be set to 0.9.~~11~~
Default:	No Economizer
Modeling Rules for Standard Design (New):	The standard design shall assume an *integrated* air economizer, available for cooling any time ODB < T_{limit}, on systems 1, 2, 3 and 4 (See Standard Design Systems Types) when mechanical cooling output capacity of the proposed design as modeled in the compliance run by the ~~ACM~~compliance software is over 75,000 Btu/hr and fan system volumetric capacity of the proposed design as modeled in the compliance run by the ~~ACM~~compliance software is over 2500 cfm. T_{limit} shall be set to 75°F for climate zones 1, 2, 3, 5, 11, 13, 14, 15 & 16. T_{limit} shall be set to 70°F for climate zones 4, 6, 7, 8, 9, 10 & 12. The ~~ACM~~compliance software shall not assume economizers on any system serving high-rise residential and hotel/motel guest room occupancies.
Modeling Rules for Standard Design (Existing Unchanged & Altered Existing):	All ~~ACMs~~Compliance software shall model existing economizers as they occur in the existing building.

2.5.3.8 Sizing Requirements

~~ACMs~~Compliance software shall use outdoor weather design conditions for the building location from Reference ~~ACMStandards~~ Joint Appendix ~~II~~ JA2 for calculating design heating and cooling loads. In rural locations the user may enter a building location that is shown to have the most similar weather rather than the closest city with the explicit approval of the local enforcement agency. The same city shall appear for all

reports of building location and design weather data. The indoor design air temperature is based on the occupancy type using Table N2-8, Table N2-9, Table N2-10, and Table N2-11.

~~ACMs~~Compliance software shall perform design heating and cooling load calculations for each zone of the standard design and proposed design. The design load methodology shall be consistent with the ASHRAE Handbook, , Fundamentals Volume, or with another method approved by the Executive Director.

The reference method uses the following assumptions for design loads:

- *Fixed Design Assumptions by Occupancy.* User values as listed in Table N2-5 and Table N2-6. Different occupancy schedules are used by the reference method to determine design loads. For cooling loads, lights, equipment/receptacles, and people are at ~~19~~00 percent~~%~~ of full load while the building is occupied. For heating loads, lights are on their standard operational schedule while ~~, these~~ all other internal gains are zero~~0~~ percent~~%~~ of full load at all hours of the day. The HVAC equipment operational hours and thermostat settings schedules shall be based on the selected occupancy type using the occupancy schedules shown in Table N2-8, Table N2-9, Table N2-10, and Table N2-11
- *Ventilation and Process Loads*. See applicable sections on ventilation and process loads.
- *Outdoor Design Temperatures, Summer Daily Temperature Swing and Latitude.* The ~~ACM~~compliance software shall use the Heating Winter Median of Extremes temperature, and the 0.5 percent Cooling ~~Dry-Bulb~~DrybulbDrybulb, and Mean Coincident ~~Wet-Bulb~~Wetbulb temperatures from Reference ~~ACM~~ Joint Appendix ~~II~~JA2; or the user shall be able to enter these values directly into the ~~ACM~~compliance software. The ~~ACM~~compliance software shall use the daily temperature range for the design cooling day from the hourly weather file for the city selected.

~~ACMs~~Compliance software shall calculate, for both the standard design and proposed design, heating and cooling loads and appropriate capacities for supply fans, cooling and heating equipment, hydronic pumps and heat rejection equipment. ~~ACMs~~Compliance software must be capable of calculating loads and capacities for the five standard design systems. All assumptions for heating and cooling equipment and fan system sizing are documented below.

Cooling Loads

Description

The reference method calculates cooling loads for each fan system using the following assumptions:

- Peak cooling design day profiles from Reference ~~ACM Joint Appendix II~~~~Standards~~ Joint Appendix JA2 for the city in which the building will be built. These profiles shall be developed using a method similar to the design day method of the reference computer program.
- All window interior and user-operated shading devices are ignored.
- Internal gains from occupants and receptacle loads are fixed at ~~100~~90 percent~~%~~ of the values listed in Table N2-5 or Table N2-6 while the building is occupied.

Indoor ~~dry-bulb~~drybulb temperatures are specified according to

- Table N2-8, Table N2-9, Table N2-10, and Table N2-11; however, the ~~ACM~~compliance software shall be able to calculate the indoor ~~wet-bulb~~wetbulb temperature using the occupancy information and the cooling coil characteristics.
- Outdoor design temperatures equal to those listed in the -0.5 Percent Cooling Design ~~Dry Bulb~~Drybulb and Mean Coincident ~~Wet-Bulb~~Wetbulb columns of Reference ~~ACM Joint Appendix II~~~~Standards~~ Joint Appendix JA2. For cooling tower design, temperatures listed in the Summer Design Wet-Bulb 0.5 percent~~%~~ columns shall be used.

Modeling Rules for

The reference method calculates the proposed design cooling load using the same

Proposed Design: assumptions used by the mechanical system designer, including all proposed lighting, ventilation and process load at a constant 100 percent~~%~~ of the levels documented in the plans and specifications for the building. That is internal loads are all at 100 percent~~%~~ of full load for the duration of the cooling load calculation.

Modeling Rules for Standard Design (All):

- The reference method shall use the same loads as the proposed design.

Heating Loads

Description

The reference method calculates heating loads for each fan system using the following assumptions:

- Indoor design temperatures according to Table N2-5 or Table N2-6.
- No direct solar heat gains.
- All internal gains -- occupants, receptacle loads, other loads (such as pickup load) except ~~and~~ lighting levels shall be assumed to be zero percent~~0%~~ of user input, default and fixed values.

Indoor design temperatures according to

- Table N2-8, Table N2-9, Table N2-10, or Table N2-11.
- Outdoor design temperatures equal to those in the Winter Median of Extremes column in Reference ~~ACM Joint Appendix II~~~~Standards~~ Joint Appendix JA2.

Sizing Procedure for Systems 1, 3, 4, and 5

Modeling Rules for Proposed Design:

1. Calculate proposed fan air flow requirements, cfm_{pc}, based on the design supply air temperature input by the user. The calculated proposed fan air flow requirement is the larger of the heating and cooling air flow requirements, but no lower than 0.4 cfm/ft^2 overall.

NOTE: In the text that follows regarding the "design procedure" or "sizing procedure" subscripts are used for a variety of variables. In the first subscript position subscripts symbols mean:

p proposed - for the proposed building or design

s standard - for the standard design

In the second subscript position subscript symbols are used:

c calculation - for design calculation or sizing calculation

s simulation - for the compliance simulation

i input - for user input

In some instances, nom is added after the subscripts to indicate the nominal value of a variable requiring further adjustments.

For the sizing ratio, R, subscripts are used:

f = fans

c = cooling

h = heating

Calculate, R_f, the ratio of the actual proposed design fan air flow, cfm_{pi} and the calculated fan air flow requirement, cfm_{pc}, and determine the standard design fan

sizing factor, F, and the proposed modeled supply air flow rate, cfm_{ps}, as follows:

Equation N2-50:

if $R_f \geq 1.3$	$F = 1.3$	$cfm_{ps} = cfm_{pi}$
if $1.0 < R_f < 1.3$	$F = R_f$	$cfm_{ps} = cfm_{pi}$
if $R_f \leq 1.0$	$F = 1.0$	$cfm_{ps} = cfm_{pc}$

Adjust all zone supply air rates and supply air rates for groups of zones according to the procedure described above.

2. Calculate system coil loads by adjusting the proposed design calculated cooling loads for fan heat and ventilation loads.
3. Reheat coil sizes are as input by the user for interior zones. Reheat with series for perimeter zones are as input by the user but no smaller than 120 percent~~%~~ of the peak heating load assuming minimum supply air temperature. All VAV minimum positions are as input by the user but no smaller than the minimum ventilation quantity.
4. Calculate total individual cooling plant loads, $CCAP_{pc}$, as the sum of all calculated coil loads served by individual plants (e.g. direct expansion unit, chiller, etc.).

   Calculate, R_c, the ratio of the input proposed total plant cooling capacity, $CCAP_{pi}$, to the proposed calculated total cooling capacity, $CCAP_{pc}$, and determine the standard design cooling sizing factor, C, and the proposed nominal modeled total cooling capacity, $CCAP_{psnom}$, as follows:

   Equation N2-51:

if $R_c \geq 1.21$	$C = 1.21$	$CCAP_{psnom} = CCAP_{pi}$
if $1.0 < R_c < 1.21$	$C = R_c$	$CCAP_{psnom} = CCAP_{pi}$
if $R_c \leq 1.0$	$C = 1.0$	$CCAP_{psnom} = CCAP_{pc}$

   $CCAP_{ps}$ is determined from $CCAP_{psnom}$ by adjusting for fan generated heat:

   Equation N2-52 $$CCAP_{ps} = CCAP_{psnom} + 1.08(CFM_{ps} - CFM_{pc}) \times \text{Fan } T_p$$

5. Calculate individual heating plant loads, $HCAP_{pc}$, as the sum of all calculated coil loads served by individual plants (e.g. boiler, furnace, etc.).
   a) For system 1, the calculated proposed system heating capacity, $HCAP_{pc}$ is the larger of the actual fan cfm x 25 and the calculated steady state heating. Calculate, R_h, the ratio of the input proposed plant heating capacity, $HCAP_{pi}$, to the proposed calculated heating capacity, $HCAP_{pc}$, and determine the standard design heating sizing factor, H, and the proposed modeled heating capacity, $HCAP_{ps}$, as follows:

   Equation N2-53:

if $R_h \geq 1.43$	$H = 1.43$	$HCAP_{ps} = HCAP_{pi}$
if $1.2 < R_h < 1.43$	$H = R_h$	$HCAP_{ps} = HCAP_{pi}$
if $R_h \leq 1.2$	$H = 1.2$	$HCAP_{ps} = 1.2 \times HCAP_{pc}$

b) For systems 3, 4 and 5, calculate, R_h, the ratio of the input proposed plant heating capacity, $HCAP_{pi}$, to the input calculated heating capacity, $HCAP_{pc}$, and determine the standard design heating sizing factor, H, and the proposed modeled heating capacity, $HCAP_{ps}$, as follows:

Equation N2-54:

if $R_h \geq 1.43$	$H = 1.43$	$HCAP_{ps} = HCAP_{pi}$
if $1.2 < R_h < 1.43$	$H = R_h$	$HCAP_{ps} = HCAP_{pi}$
if $R_h \leq 1.2$	$H = 1.2$	$HCAP_{ps} = 1.2 \times HCAP_{pc}$

Modeling Rules for Standard Design (All):

Load calculations are performed for the standard building. Total system fan supply air flows are calculated using the same supply air temperatures used for the proposed design, except limited to the ranges listed in the standard design system inputs in Table N2-14 through Table N2-17, and multiplied by the standard design sizing factor, F, determined in the proposed design sizing procedure.

2. Supply air quantities for each zone of multiple zone systems are determined by calculated zone loads, adjusted so that the block load adds up to the fan cfm.
3. Reheat coil sizes are determined with minimum VAV box positions of 0.8 for interior zones and 0.5 for perimeter zones on interior included reheat coils are only to the standard design if they have been input for the proposed design. Standard design VAV characteristics are determined as follows:

Air flow rates for interior zones (only those without exterior walls) are further oversized by 33 percent~~%~~. For a system with DDC to the zone, minimum VAV settings for VAV zones are set to meet the larger of minimum ventilation requirements or 20 percent~~%~~ of the zone peak supply air requirements. The airflow shall increase to the design maximum heating airflow but no larger than 50 percent~~%~~ of the zone peak supply air requirements. Reheat is added to meet ventilation loads only if input for the proposed design. ~~Minimum VAV settings for interior VAV zones are set to meet the larger of minimum ventilation requirements, 0.4 cfm/ft^2 or 30% of the zone peak supply air requirements. Reheat is added to meet ventilation loads only if input for the proposed design.~~

For a system without DDC to the zone, minimum VAV settings for VAV zones are set to meet the larger of minimum ventilation requirements or 30 percent~~%~~ of the zone peak supply air requirements. Reheat is added to meet ventilation loads only if input for the proposed design.

~~Minimum volume settings for exterior VAV zones are set to the larger of 0.4 cfm/ft^2 or 30% of the zone peak supply air requirements.~~

Standard system coil loads are calculated based on calculated zone loads adjusted for fan heat and ventilation loads, then adjusted again for piping loads (for hydronic systems only). Standard system plant capacities are determined by multiplying adjusted coil loads by the standard design sizing factors, C and H, determined in the proposed design sizing procedure.

Sizing Procedure for System 2

Modeling Rules for Proposed Design:

1. Calculate proposed fan air flow requirements, cfm_{pc}, based on the design supply air temperature input by the user or the default supply air temperature listed in the system description in Table N2-14. The calculated proposed fan air flow requirement is the larger of the heating and cooling air flow requirements, but no lower than 0.4 cfm/ft^2 overall.

   Calculate, R_f, the ratio of the actual proposed design fan air flow, cfm_{pi} and the calculated fan air flow requirement, cfm_{pc}, and determine the standard design fan sizing factor, F, and the proposed modeled supply air flow rate, cfm_{ps}, as follows:

   Equation N2-55:

if $R_f \geq 1.3$	$F = 1.3$	$Cfm_{ps} = cfm_{pi}$
if $1.0 < R_f < 1.3$	$F = R_f$	$Cfm_{ps} = cfm_{pi}$
if $R_f \leq 1.0$	$F = 1.0$	$cfm_{ps} = cfm_{pc}$

   Adjust all zone supply air rates and supply air rates for groups of zones according to the procedure described above.

2. Calculate system coil loads by adjusting the proposed design calculated cooling loads for fan heat and ventilation loads.

3. Calculate, R_c, the ratio of the input proposed plant cooling capacity, $CCAP_{pi}$, to the same calculated capacity, $CCAP_{pc}$, and determine the standard design cooling sizing factor, C, and the proposed modeled cooling capacity, $CCAP_{ps}$, as follows:

   Equation N2-56:

if $R_c \geq 1.21$	$C = 1.21$	$CCAP_{ps} = CCAP_{pi}$
if $1.0 < R_c < 1.21$	$C = R_c$	$CCAP_{ps} = CCAP_{pi}$
if $R_c \leq 1.0$	$C = 1.0$	$CCAP_{ps} = CCAP_{pc}$

4. Calculate the amount of electric resistance heat, $HCAP_{pelec}$, by comparing the user input heating capacity at design conditions, $HCAP_{pdesign}$, to the actual heating load and using the following equations:

   Equation N2-57 $$HCAP_{pdesign} = HP \times HCAP_{pi}$$

   Equation N2-58 $$HLOAD_{pdesig} = HP \times HCAP_{sc}$$

   Equation N2-59 $$HCAP_{pelec} = 1.43 \times HLOAD_{pdesign} - HCAP_{pdesign}$$

5. If the user does not input design heat pump heating capacity, calculate HCAPelec according to the following procedure:

   a) Calculate the heat pump design load factor, HP, from Equation N2-63.

b) Calculate $HCAP_{pdesign}$ by multiplying the rated heat pump heating capacity, input by the user, by HP.

c) Use the equation under step 4 to calculate $HCAP_{elec}$.

Modeling Rules for Standard Design (All):

1. Load calculations are performed for the standard building. Total system fan supply air flows are calculated using the standard design cooling load and the same supply air temperatures used for the proposed design, except limited to the ranges listed in the standard design system inputs in Equation N2-15, and multiplied by the standard design fan sizing factor, F, determined in the proposed design sizing procedure.
2. Standard system coil loads are calculated based on calculated zone loads adjusted for fan heat and ventilation loads. Standard system cooling capacity is determined by multiplying adjusted coil loads by the standard design cooling sizing factors, C, determined in Step 3 of the proposed design sizing procedure, unless Step 4 below applies.
3. Standard design heating capacity, $HCAP_{ss}$, is determined from the following procedure:

a) Equation N2-60 $CCAP_{ss} = C \times (CCAP_{sc} + 1.08[CFMss-CFMsc] \times Fan\ T_s)$

and

Equation N2-61 $SCAP_{ss} = C \times SCAP_{sc}$

Equation N2-62 $HCAP_{ss} = CCAP_{ss}$

b) Calculate the heat pump design load factor, HP, from the following equation:

Equation N2-63 $HP = 0.25367141 + 0.01043512\ K + 0.00018606\ K^2 - 0.00000149\ K^3$

where

$K = T_{outside}$

c) Calculate the design heating capacity, $HCAP_{sdesign}$, by multiplying the rated heat pump heating capacity, input by the user, by HP.

Equation N2-64 $HCAP_{sdesign} = HP \times HCAP_{pi}$

Equation N2-65 $HLOAD_{sdesign} = HP \times HCAP_{sc}$

d) $HCAP_{sdesign}$ is adjusted to be the larger of $HCAP_{sdesign}$, and 75 percent~~%~~ of the actual design heating load adjusted for fan power and ventilation loads, $HLOAD_{sdesign}$, or

Equation N2-66 $HCAP_{sdesign} = MAXIMUM\ (HCAP_{sdesign}, 0.75 \times HLOAD_{sdesign})$

e) The electric heating capacity for the standard design is thus determined:

Equation N2-67 $$HCAP_{selec} = 1.43 \times (HLOAD_{sdesign} - HCAP_{sdesign})$$

f) If $HCAP_{sdesign}$ is determined from $0.75 \times HLOAD_{sdesign}$, then the modeled standard design heat pump heating capacity, $HCAP_{ss}$, is determined from the following equations:

Equation N2-68 $$HCAP_{ss} = HLOAD_{sdesign} / HP$$

Equation N2-69 $$CCAP_{ss} = HCAP_{ss}$$

2.5.3.9 Modeling Default Heating and Cooling Systems

Description: ~~ACMs~~Compliance software shall model the proper default heating and cooling systems when the user indicates, with the required ~~ACM~~compliance software input, one of the following conditions for the building:

1. Mechanical compliance not performed. When the user indicates that no mechanical compliance will be performed, the ~~ACM~~compliance software shall automatically model the default heating and cooling systems identical to the standard systems defined in Section 2.5.2.4 (Standard Design Systems). The ~~ACM~~compliance software shall require the user to provide the information needed to determine the proper default system type.
2. Mechanical compliance performed with no heating installed. When the user indicates that mechanical compliance will be performed, but the entire project or portions of the space have no installed heating or are heated by an existing heating system, the ~~ACM~~compliance software shall default to a heating system identical to the standard heating system defined in Section 2.5.2.4 (Standard Design Systems) for the space(s) with no installed heating or heated by an existing system. The ~~ACM~~compliance software shall require the user to provide the information needed to determine the proper default system type.
3. Mechanical compliance performed with no cooling installed. When the user indicates with the required ~~ACM~~compliance software input that mechanical compliance will be performed, but the entire project or portions of the space have no installed cooling or are cooled by an existing cooling system, the ~~ACM~~compliance software shall default to a cooling system identical to the standard cooling system defined in Section 2.5.2.4 (Standard Design Systems) for the space(s) with no installed cooling or cooled by an existing system. The ~~ACM~~compliance software shall require the user to provide the information needed to determine the proper default system type. The heating fuel source shall be fossil-fuel and the cooling source for residential and hotel/motel guest rooms shall be “other”.

DOE-2 Keyword(s) SYSTEM-TYPE

Input Type Prescribed

Tradeoffs N/A

Modeling Rules for Proposed Design: The proposed design systems shall be determined as follows:

1. *Mechanical compliance not performed*. ~~ACMs~~Compliance software shall automatically size and model the default heating and cooling systems and adjust the heating by the standard design sizing factor of 1.2. ~~ACMs~~Compliance software shall select the proper mechanical system based on

the building type and whether the permitted space is single zone (the conditioned floor area is less than 2500 ft^2) or multiple zone (the conditioned floor area is 2500 ft^2 or greater). See Section 4.3.6.1~~3.1~~ (Thermal Zones) for guidelines for zoning a building. The heating fuel source shall be fossil-fuel and the cooling source for residential and hotel/motel guest rooms shall be "other".

~~ACMs~~Compliance software shall report the default heating and cooling energy use on PERF-1 and indicate that mechanical compliance was not performed. ~~ACMs~~Compliance software shall not print any Mechanical forms.

2. *Mechanical compliance performed with no heating installed*. ~~ACMs~~Compliance software shall automatically size and model the default heating system for the entire project or portions of the space which have no installed heating or use an existing system and adjust the capacity by the standard design sizing factor of 1.2. ~~ACMs~~Compliance software shall select the type of heating system based on the building type and whether the permitted space is single zone or multiple zone. The heating fuel source shall be fossil fuel and the cooling source for residential and hotel/motel guest rooms shall be "other".

   ~~ACMs~~Compliance software shall print all applicable mechanical forms and report the heating energy use for the entire project. ~~ACMs~~Compliance software shall report "No Heating Installed" for zones with no installed heating system and for zones using the existing heating system.

3. *Mechanical compliance performed with no cooling installed*. ~~ACMs~~Compliance software shall automatically size and model the default cooling system for the entire project or portions of the space which have no installed cooling or use an existing cooling system. ~~ACMs~~Compliance software shall select the type of heating system based on the building type and whether the permitted space is single zone or multiple zone. The heating fuel source shall be fossil fuel and the cooling source for residential and hotel/motel guest rooms shall be "other".

   ~~ACMs~~Compliance software shall print all applicable mechanical forms and report the cooling energy use for the entire project. ~~ACMs~~Compliance software shall report "No Cooling Installed" for zones with no installed cooling system and for zones using the existing cooling system.

   Proposed design supply air rates and heating capacity shall be determined according to procedures in Section 2.5.3.8 (Sizing Requirements) for the appropriate system type. Fan power shall be determined using 0.365 watts per cfm of supply air rate for the cooling system. The rate of supply air (in cfm) shall meet the building's minimum ventilation requirements.

   For occupancies other than the residential units of high-rise residential buildings and hotel/motel guest rooms, this default proposed cooling system shall also have an integrated ~~dry-bulb~~drybulb economizer as specified in this section, regardless of the capacity.

Modeling Rules for Standard Design (All):

~~ACMs~~Compliance software shall determine the standard design systems as follows:

1. *Mechanical compliance not performed*. ~~ACMs~~Compliance software shall automatically size and model the appropriate standard heating and cooling systems for the entire project using Section 2.5.2.4 (Standard Design Systems). ~~ACMs~~Compliance software shall use the standard design sizing factor of 1.2 for heating.

2. *Mechanical compliance performed with no heating installed*. ~~ACMs~~Compliance software shall automatically size and model the appropriate standard heating and cooling systems for the entire project using Section 2.5.2.4 (Standard Design Systems). ~~ACMs~~Compliance software shall adjust the heating capacity by the standard design sizing factor of 1.2.

3. *Mechanical compliance performed with no cooling installed*. ~~ACMs~~Compliance software shall automatically size and model the appropriate standard heating and cooling systems for the entire project using Section 2.5.2.4 (Standard Design Systems).

Standard design supply air rates, heating, and cooling capacity shall be determined according to procedures in Section 2.5.3.8 (Sizing Requirements) for the appropriate system type. Fan power shall be determined using 0.365 watts per cfm of supply air rate for the cooling system. The rate of supply air (in cfm) shall meet the building's minimum ventilation requirements.

For occupancies other than the residential units of high-rise residential buildings and hotel/motel guest rooms this default standard cooling system shall also have an integrated ~~dry-bulb~~drybulb economizer as specified in this section, regardless of the HVAC system fan volume or cooling capacity.

2.5.3.10 System Supply Air Temperature Control

Description: ~~ACMs~~Compliance software shall be capable of modeling two control strategies, or reset strategies, for supply air temperature for any system compared to standard design systems 3 and 4. ~~ACMs~~Compliance software shall: (1) require the user to specify the control strategy used for controlling supply air temperature; and, (2) allow the user to enter the design cooling supply air temperature. Each of these strategies is described below.

Constant. Cooling supply air temperature is controlled to a fixed set point whenever cooling is required.

Outdoor Air Reset. Cooling supply air temperature resets upward during cool weather to reduce zone reheat losses. The ~~ACM~~compliance software shall require the user to enter the reset schedule.

NOTE: Modeling dual duct systems in the proposed design requires the user to enter the heating supply air temperature control strategy as well. Refer to Chapter 3.

DOE-2 Keyword(s)
HEAT-CONTROL
COOL-CONTROL
DAY-RESET-SCH

Input Type: Default

Tradeoffs: Neutral

Modeling Rules for Proposed Design: The reference method determines the supply air temperature control of the proposed design as input by the user according to the plans and specifications for the building. ~~ACMs~~Compliance software shall use the following schedule for the outdoor air reset:

SUPP-AIR-SCH	=	DAY-RESET-SCH
SUPPLY-HI	=	[SUPPLY-LO + 5]
SUPPLY-LO	=	[greater of SAT and 50]
OUTSIDE-HI	=	[SUPPLY-HI]
OUTSIDE-LO	=	[SUPPLY-LO]
SUPP-AIR-RESET	=	RESET-SCHEDULE THRU DEC 31,
(ALL)		SUPP-AIR-SCH

In the absence of the user input, ~~ACMs~~Compliance software shall use the Outdoor Air Reset control strategy for the proposed building.

Default: Outdoor Air Reset

Modeling Rules for Standard Design (All): The reference method shall use the same supply air temperature control strategy and schedule as the proposed design.

2.5.3.11 Zone Ventilation Air

Description: The reference method models mechanical supply of outdoor ventilation air as part of simulation of any fan system. The ventilation rate for a fan system is the sum of all ventilation requirements for all zones served by the same fan system.

~~ACMs~~Compliance software shall allow the user to: 1) enter the ventilation rate for each zone; and, 2) identify the user input ventilation rate as a tailored ventilation rate. When tailored ventilation rates are entered for any zone, an ~~ACM~~compliance software shall output on compliance forms that tailored ventilation rates have been used for compliance and that a Tailored Ventilation worksheet, and the reasons for different ventilation rates, shall be provided as part of the compliance documentation. Tailored ventilation inputs are designed to allow special HVAC applications to comply, but to be used they shall correspond to specific needs and the particular design and the plans and specifications used to meet those needs. If tailored ventilation is used, the compliance software must make a note in the special features section.

The reference method determines the minimum building ventilation rate by summing the ventilation rates for all zones determined from Table N2-2 or Table N2-3 as well as zones with justified tailored ventilation rates, input by the user.

DOE-2 Command

DOE-2 Keyword(s) OUTSIDE-AIR-CFM
MIN-OUTSIDE-AIR

Input Type Default

Tradeoffs N/A

Modeling Rules for Proposed Design: The reference method determines the proposed design zone ventilation rate as follows:

1. If no ventilation rate has been entered by the user, the ~~ACM~~compliance software shall use values from Table N2-5 or Table N2-6 for the applicable occupancy as the zone ventilation rate for the proposed design.
2. If the zone ventilation rate has been entered by the user, the ~~ACM~~compliance software shall use this value as the zone ventilation rate for the proposed design.

   This total shall not be less than the minimum ventilation rate calculated above. The ~~ACM~~compliance software shall default to the minimum ventilation rate if the proposed ventilation rate, input by the user, is less than the minimum ventilation rate.
3. If the zone is controlled by DCV the ~~ACM~~compliance software shall output on compliance forms that DEMAND CONTROL VENTILATION IS EMPLOYED FOR THIS ZONE PER ~~SECTION~~§ 121 and shall use the larger of the following as the zone ventilation rate for the proposed design:

   a) half of the value from Table N2-5 or Table N2-6.

b) The minimum rate.

c) half of the user defined amount, if the zone ventilation rate has been entered by the user.

Default: Ventilation rates from Table N2-5 or Table N2-6.

Modeling Rules for Standard Design (All): The reference method determines the standard design zone ventilation rate as follows:

1. If no tailored ventilation rate has been entered, the ~~ACM~~compliance software shall use values from Table N2-5 or Table N2-6for the applicable occupancy as the zone ventilation rate for the standard design.
2. If a tailored ventilation rate has been entered, the ~~ACM~~compliance software shall assume the tailored value as the zone ventilation rate for the standard design.
3. If the zone is served by either a single-zone system or a multiple zone system with DDC to the zone level12 (in the proposed design) that has an air-side economizer and has a design occupant density greater than or equal to 25 people per 1000 ft^2 (40 ft^2 per person) from Table N2-5 or Table N2-6, unless space exhaust is greater than the design ventilation rate specified in 121 (b) 2 B minus 0.2 cfm per ft^2 of conditioned area, the ~~ACM~~compliance software shall output on compliance forms that DEMAND CONTROL VENTILATION IS REQUIRED FOR THIS ZONE PER ~~SECTION~~§ 121 and the ~~ACM~~compliance software shall use the larger of the following as the zone ventilation rate for the standard design:

   a) half of the value from Table N2-5 or Table N2-6.

   b) the minimum rate.

   c) half of the user defined amount, if the zone ventilation rate has been entered by the user.

2.5.3.12 Zone Terminal Controls

Description: ~~ACMs~~Compliance software shall be capable of modeling zone terminal controls with the following features:

- *Variable air volume (VAV).* Zone loads are met by varying amount of supply air to the zone.
- *Minimum box position.* The minimum supply air quantity of a VAV zone terminal control shall be set as a fixed amount per conditioned square foot or as a percent of peak supply air.
- *(Re)heating Coil*. ~~ACMs~~Compliance software shall be capable of modeling heating coils (hot water or electric) in zone terminal units. ~~ACMs~~Compliance software may allow users to choose whether or not to model heating coils.
- *Hydronic heating*. The ~~ACM~~compliance software shall be able to model hydronic (hot water) zone heating.
- *Electric Heating*. The ~~ACM~~compliance software shall be able to model electric resistance zone heating.

~~ACMs~~Compliance software shall require the user to specify the above criteria for any zone terminal controls of the proposed system.

DOE-2 Keyword(s) MIN-CFM-RATIO
ZONE-HEAT-SOURCE

	HMAX-FLOW-RATIO THERMOSTAT-TYPE REHEAT-DELTA-T
Input Type	Required
Tradeoffs	Yes
Modeling Rules for Proposed Design:	The reference method models any zone terminal controls for the proposed design as input by the user according to the plans and specifications for the building. All ~~ACMs~~Compliance software that explicitly model variable air volume systems shall not allow any minimum box position to be smaller than the air flow per square foot needed to meet the minimum occupancy ventilation rate. For zone terminal controls with fault detection and diagnostics (FDD) systems verified by procedures in Reference Nonresidential Appendix NA7.5.10, the keyword MIN-CFM-RATIO shall be the minimum box position as indicated on the plans and specifications for the building. For zone terminal controls without verified FDD systems, the keyword MIN-CFM-RATIO shall be set to 1.1 times the minimum box position as indicated on the plans, not to exceed 1.0, to reflect imperfect operation of the VAV box.13
Modeling Rules for Standard Design (New & Altered Existing):	For systems 3 and 4, the ~~ACM~~compliance software shall model zone terminal controls for the standard design with the following features: Variable volume cooling and variable~~fixed~~ volume heating Minimum box position set equal to the larger of: a) 2~~3~~0 percent~~%~~ of the peak supply volume for the zone; or b) The air flow needed to meet the minimum zone ventilation rate.~~; or~~ THERMOSTAT-TYPE shall be set to Reverse Action to allow for variable volume heating. HMAX-FLOW-RATIO shall be set to 0.50 to limit flow ratio in the heating mode to 50 percent~~%~~ REHEAT-DELTA-T shall be set to 40º F to limit stratification and short circuiting. ~~c) 0.4 cfm per square foot of conditioned floor area of the zone.~~ Hydronic heating.
Modeling Rules for Standard Design (Existing Unchanged):	The reference method models any zone terminal control for the existing design as it occurs in the existing system.

2.5.3.13 Pump Energy

Description:	The reference method models energy use of pumping systems for hot water, chilled water and condenser water systems (cooling towers), accounting for energy use of pumps and additional cooling energy associated with pump energy rejected to the water stream.
DOE-2 Command	
DOE-2 Keyword(s)	CCIRC-MOTOR-EFF CCIRC-IMPELLER-EFF CCIRC-HEAD CCIRC-DESIGN-T-DROP HCIRC-MOTOR-EFF

HCIRC-IMPELLER-EFF
HCIRC-HEAD
HCIRC-DESIGN-T-DROP
TWR-MOTOR-EFF
TWR-IMPELLER-EFF
TWR-PUMP-HEAD
TWR-RANGE

Input Type: Required

Tradeoffs: Yes

Modeling Rules for Proposed Design: The reference method calculates proposed design pump energy using the following inputs and procedures:

Hot Water Circulation Loop Pump

a) Impeller Efficiency = 67 percent~~%~~

b) Motor Efficiency = Full-load efficiency of the electric motor established in accordance with NEMA Standard MG1 (see Section 2.5.2.15)

~~Equation N2-36~~

$$\cancel{HCIRC-MOTOR-EFF = \frac{\sum_{i=1}^{n}(MEFF_{hwp_i} \times HP_{hwp_i})}{\sum_{i=1}^{n} HP_{hwp_i}}}$$

Equation N2-70

$$HCIRC-MOTOR-EFF = \frac{\sum_{i=1}^{n} HP_{hwp_i}}{\sum_{i=1}^{n} HP_{hwp_i} / MEFF_{hwp_i}}$$

where

$MEFF_{hwp_i}$ = Hot water pump motor efficiency

HP_{hwp_i} = Hot water pump motor nameplate HP

n = Number of hot water pump motors

c) Motor Horsepower — As designed

d) Flow Rate — As designed (in GPM)

e) Temperature Drop — Design boiler capacity (Btu)/(500×GPM) (in ^{o}F)

f) Design Head — As designed with a maximum of 100 feet of water.

g) Pump Control — As designed

h) Valve Types — Either 2-way or 3-way as designed

Chilled Water Circulation Loop Pump

a) Impeller Efficiency — 72 percent~~%~~

b) Motor Efficiency Full-load efficiency of the electric motor established in accordance with NEMA Standard MG1 (see Section 2.5.2.15)

~~Equation N2-37~~

$$\cancel{CCIRC_MOTOR_EFF = \frac{\sum_{i=1}^{n}(MEFF_{chwp_i} \times HP_{chwp_i})}{\sum_{i=1}^{n} HP_{chwp_i}}}$$

Equation N2-71

$$CCIRC-MOTOR-EFF = \frac{\sum_{i=1}^{n} HP_{chwp_i}}{\sum_{i=1}^{n} HP_{chwp_i} / MEFF_{chwp_i}}$$

where

$MEFF_{chwp_i}$ = Chilled water pump motor efficiency

HP_{chwp_i} = Chilled water pump motor nameplate HP

n = Number of chilled water pump motors

c) Motor Horsepower As designed

d) Flow Rate As designed (in GPM)

e) Temperature Drop Calculated as follows (in ^{o}F)

Equation N2-72

$$CCIRC-DESIGN-T-DROP = \frac{\sum_{i=1}^{n}(Q_{des_i}) \times 12}{\sum_{i=1}^{n}(GPM_{evap_i}) \times 0.5}$$

where

Q_{des_i} = Chiller design capacity in tons

GPM_{evap_i} = Flow rate in the evaporator in GPM

n = Number of chillers

f) Design Temperature As designed (in ^{o}F)

g) Design Head Minimum (100, $\Delta H_{chwsyspiping}$) in feet of water

Equation N2-73

$$\Delta H_{chwsyspiping} = \Delta H_{chwsys} - \frac{\sum_{i=1}^{n}(GPM_{evap_i} \times \Delta H_{evap_i})}{\sum_{i=1}^{n} GPM_{evap_i}}$$

where

$\Delta H_{chwsyspiping}$	=	Chilled water piping system head
ΔH_{chwsys}	=	Chilled water system head
GPM_{evap_i}	=	Evaporator flow (in GPM)
ΔH_{evap_i}	=	Evaporator bundle pressure drop (in feet of water)
n	=	Number of evaporators in the system

h) Pump Control — As designed

i) Valve Types — Either 2-way or 3-way as designed

Condenser Water Circulation Loop Pump

a) Impeller Efficiency — 67 percent~~%~~

b) Motor Efficiency — Full-load efficiency of the electric motor established in accordance with NEMA Standard MG1 (see Section 2.5.2.15)

~~Equation N2-40~~

$$\cancel{TWR - MOTOR - EFF = \frac{\sum_{i=1}^{n}(MEFF_{cwp_i} \times HP_{cwp_i})}{\sum_{i=1}^{n} HP_{cwp_i}}}$$

Equation N2-74

$$TWR - MOTOR - EFF = \frac{\sum_{i=1}^{n} HP_{cwp_i}}{\sum_{i=1}^{n} HP_{cwp_i} / MEFF_{cwp_i}}$$

where

$MEFF_{cwp_i}$	=	Condenser water pump motor efficiency
HP_{cwp_i}	=	Condenser water pump motor nameplate HP
n	=	Number of condenser water pump motors

c) Motor Horsepower — As designed

d) Flow Rate — As designed (in GPM)

e) Range — As designed (in ^{o}F)

f) Design Head — Minimum (80, ΔH_{cws}) in feet of water

Equation N2-75

$$\Delta H_{cws} = \Delta H_{cwsys} + \frac{\sum_{i=1}^{n} (GPM_{evap_i} \times \Delta H_{evap_i})}{\sum_{i=1}^{m} GPM_{cond_i}}$$

where

ΔH_{cwsys}	=	Condenser water system head
ΔH_{evap_i}	=	Evaporator bundle pressure drop (in feet of water)
ΔH_{cws}	=	Proposed condenser water system head
GPM_{evap_i}	=	Evaporator flow (in GPM)
GPM_{cond_i}	=	Condenser flow (in GPM)
n	=	Number of evaporators in the system
m	=	Number of condensers in the system

g) Cooling Tower Height — As designed

h) Pump Control — As designed

Modeling Rules for Standard Design (New):

The reference method calculates standard design pump energy using the following inputs and procedures:

Hot Water Circulation Loop Pump

a) Impeller Efficiency — 67 percent~~%~~

b) Motor Efficiency — Standard motor efficiency from Table N2-20

c) Motor Horsepower — Same as the proposed design

d) Flow Rate (in GPM) — Calculated from standard boiler capacity = Boiler Capacity / 15000

e) Temperature Drop — 30 ^{o}F

f) Standard Head — Same as proposed up to 100 feet of water

g) Pump Control — Fixed speed

h) Valve Types — 2-way

Chilled Water Circulation Loop Pump

a) Impeller Efficiency — 72 percent~~%~~

b) Motor Efficiency — Standard motor efficiency from Table N2-20

c)	Motor Horsepower	Same as the proposed design
d)	Flow Rate (in GPM)	Calculated from standard chiller capacity GPM = tons × 2.0
e)	Temperature Drop	12 °F
f)	Design Temperature	44 °F
g)	Standard Head water	Same as proposed design up to 100 feet of
h)	Pump Control	Variable speed
i)	Valve Types	2-way

Condenser Water Circulation Loop Pump

a)	Impeller Efficiency	67 percent~~%~~
b)	Motor Efficiency	Standard motor efficiency from Table N2-20
c)	Motor Horsepower	Same as the proposed design
d)	Range	10 °F
e)	Flow Rate (in GPM)	Calculated from standard chiller capacity GPM = tons × (1 + 1/COP) × 2.4
f)	Standard Head	Minimum (80, ΔH_{cws}) in feet of water

Equation N2-76

$$\Delta H_{cws} = \frac{\Delta H_{cwsyspiping}}{\text{Multiplier}} + 20 + \frac{\sum_{i=1}^{n} (GPM_{evap_i} \times 20)}{\sum_{i=1}^{m} GPM_{cond_i}}$$

where

Equation N2-77

$$\Delta H_{cwsyspiping} = \Delta H_{cwsys} - \frac{\sum_{i=1}^{m} (GPM_{cond_i} \times \Delta H_{cond_i})}{\sum_{i=1}^{m} GPM_{cond_i}}$$

$\Delta H_{cwsyspiping}$	=	Condenser water piping system head
ΔH_{cwsys}	=	Condenser water system head
ΔH_{cond_i}	=	Condenser bundle pressure drop (in feet of water)
ΔH_{cws}	=	Standard condenser water system head

GPM_{evap_i} = Evaporator flow (in GPM)

GPM_{cond_i} = Condenser flow (in GPM)

Multiplier = A multiplier from Table N2-21 for adjusting the condenser water piping system head based on pipe size and flow at connection to the cooling tower.

n = Number of evaporators in the system

m = Number of condensers in the system

g) Pump Control Fixed speed

Default: Hot water loop design head = 75 feet of water

Chilled water loop design head = 75 feet of water

Condenser water loop design head = 60 feet of water

Modeling Rules for Standard Design (Existing Unchanged & Altered Existing): ~~ACM~~compliance software shall use the information from the existing pumping systems for the standard design. If this information is not available, ~~ACMs~~Compliance software shall use the above Standard Design values.

Table N2-21 – Pipe Head Multipliers Based on Pipe Size and Flow at Connection to the Cooling Tower

Proposed Flow		Normal Size		Undersize down to		Oversized up to	
From (GPM)	To (GPM)	Pipe Size (inch)	Multiplier	Pipe Size (inch)	Multiplier	Pipe Size (inch)	Multiplier
1	35	1.50	1.00	1.25	2.00	2.00	0.31
36	74	2.00	1.00	1.50	3.00	2.50	0.38
75	107	2.50	1.00	2.00	2.25	3.00	0.35
108	180	3.00	1.00	2.50	2.75	4.00	0.25
181	355	4.00	1.00	3.00	3.75	5.00	0.30
356	580	5.00	1.00	4.00	3.00	6.00	0.38
581	880	6.00	1.00	5.00	2.50	8.00	0.25
881	1,600	8.00	1.00	6.00	3.75	10.00	0.30
1,601	2,500	10.00	1.00	8.00	3.00	12.00	0.38
2,501	3,700	12.00	1.00	10.00	2.25	14.00	0.63
3,701	4,500	14.00	1.00	12.00	1.50	16.00	0.50
4,501	6,500	16.00	1.00	14.00	1.88	18.00	0.55
6,501	9,000	18.00	1.00	16.00	1.75	20.00	0.53
9,001	12,000	20.00	1.00	18.00	1.75	24.00	0.43
12,001	16,000	24.00	1.00	20.00	1.75	30.00	0.50
16,001	20,000	30.00	1.00	24.00	1.75	36.00	0.50
20,001	30,000	36.00	1.00	30.00	1.75	N/A	1.0
30,001	>30,001	Any Size	1.00	N/A	1.0	N/A	1.0

2.5.3.14 Chiller Characteristics

Description: The ~~ACM~~compliance software chiller model shall, at a minimum, incorporate the following characteristics:

- *Minimum Ratio:* The minimum capacity for a chiller below which it cycles.
- *Electrical Input Ratio*: Efficiency of the chiller at rated conditions. It is the ratio of the electrical power input to the chiller to the nominal capacity of the chiller.

- *Condenser Type*: It specifies whether the condenser is air-cooled or water-cooled.
- *GPM per Ton*: The ratio of cooling tower water flow in GPM to chiller capacity in tons.

DOE-2 Keyword(s)

SIZE
MIN-RATIO
EIR
*-COND-TYPE
COMP-TO-TWR-WTR

Input Type: Required

Tradeoffs: Yes

Modeling Rules for Proposed Design:

~~ACMs~~Compliance software shall model chiller characteristics as follows:

SIZE: The chiller size shall be calculated as follows

Equation N2-78

$$SIZE = \frac{Q_{des_i} \times 0.012}{CAPFT\left(t_{chws_des}, t_{cws_des}\right)}$$

where

Q_{des_i} = Chiller design capacity (in tons) at reference conditions

t_{chws_des} = Chilled water supply temperature at design conditions

t_{cws_des} = Condenser water supply temperature at design conditions

CAPFT() = Capacity performance curve (see 2.5.3.16)

Minimum Ratio: For chillers with customized curves, ~~ACMs~~Compliance software shall calculate the minimum ratio using the part-load data by

Equation N2-79

$$\text{MIN} - \text{RATIO} = \frac{Q_{des_i}}{\text{Minimum}\left(\left[Q_{pload_i1}, Q_{pload_i2}, \ldots, Q_{pload_ij}\right]\right)}$$

where

Q_{pload_ij} = Chiller part-load performance data, Capacity in tons

Q_{des_i} = Chiller design capacity (in tons)

The default minimum ratio values are shown in the table below.

Chiller Type	Default Unloading Ratio
Reciprocating	25%
Screw	15%
Centrifugal	10%
Scroll	25%
Single Effect Absorption	10%
Double Effect Absorption	10%

Electrical Input Ratio: ~~ACMs~~Compliance software shall calculate the Electrical Input Ratio (EIR) for chillers with customized performance curves from the user input data.

Equation N2-80

$$E-I-R=\frac{P_{des_i}\times 3.413}{Q_{des_i}\times EIRFT\left(t_{chws_des},t_{cws_des}\right)\times EIRFPLR(1.0)\times 12.0}$$

$$\cancel{E-I-R=\frac{P_{des_i}\times 3.413}{Q_{des_i}\times 12.0}}$$

where

P_{des_i} = Chiller design input power at design conditions t_{chws_des} and t_{cws_des} (in kW)

Q_{des_i} = Chiller design capacity at design conditions t_{chws_des} and t_{cws_des} (in tons)

EIRFT()= Efficiency performance curve (see 2.5.2.6)

EIRFPLR()= Efficiency performance curve (see 2.5.3.16)

For other chillers, ~~ACMs~~Compliance software shall calculate the EIR using

Equation N2-81

$$EIR=\frac{1}{COP\times EIRFT(44{,}85)\times EIRFPLR(1.0)}$$

$$\cancel{EIR=\frac{1}{COP}}$$

where

COP	=	Coefficient of Performance
EIR	=	Energy Input Ratio
EIRFT()	=	Efficiency performance curve (see 2.5.3.16)
EIRFPLR()	=	Efficiency performance curve (see 2.5.3.16)

Condenser Type: ~~ACMs~~Compliance software shall require the user to input whether the chiller is air-cooled or water-cooled.

GPM per Ton: For water-cooled chillers with customized performance curves, ~~ACMs~~Compliance software shall determine the condenser water flow as a ratio of condenser water flow rate (GPM) to rated chiller capacity (tons) using the following equation.

Equation N2-82

$$COMP-TO-TWR-WTR=\frac{\sum_{i=1}^{n}GPM_{cond_i}}{\sum_{i=1}^{m}Q_{des_i}}$$

where

GPM_{cond_i} = Condenser flow rate (in GPM)

Q_{des_i} = Chiller design capacity (in tons)

n = Number of condensers

m = Number of chillers

For default water-cooled chillers, ~~ACMs~~Compliance software shall determine the condenser water flow as follows.

Equation N2-83

$$COMP - TO - TWR - WTR = \left[1 + \frac{1}{\frac{\sum_{i=1}^{n} (COP_i \times SIZE_i)}{\sum_{i=1}^{n} SIZE_i}} \right] \times 2.4$$

where

COP_i = Coefficient of performance for chiller

Equation N2-84

$$SIZE_i = \frac{Q_{des_i} \times 12{,}000}{1{,}000{,}000}$$

n = Number of chillers

Modeling Rules for Standard Design (New & Altered Existing):

~~ACMs~~Compliance software shall model chiller characteristics for the standard design as follows:

SIZE: The chiller size shall be calculated as follows

Equation N2-85

$$SIZE = \frac{Q_i \times 0.012}{CAPFT(44{,}85)}$$

where

Q_i = Chiller capacity (in tons) at ARI reference conditions

CAPFT() = Capacity performance curve (see 2.5.3.16)

Minimum Ratio: ~~ACMs~~Compliance software shall calculate the minimum ratio default values are shown in the table below.

Chiller Type	Default Unloading Ratio
Reciprocating	25%
Screw	15%
Centrifugal	10%

Scroll	25%
Single Effect Absorption	10%
Double Effect Absorption	10%

Electrical Input Ratio: ~~ACMs~~Compliance software shall calculate the Electrical Input Ratio (EIR) for the standard design using

Equation N2-86

$$EIR = \frac{1}{COP \times EIRFT(44,85) \times EIRFPLR(1.0)}$$

where

COP = Coefficient of Performance

EIR = Energy Input Ratio

EIRFT() = Efficiency performance curve (see 2.5.2.6~~33~~)

EIRFPLR() = Efficiency performance curve (see 2.5.3.16)

Condenser Type: ~~ACMs~~Compliance software shall model water-cooled condenser for the standard design.

*-COND-TYPE = TOWER

GPM per Ton: For water-cooled chillers with, ~~ACMs~~Compliance software shall determine the condenser water flow as follows.

Equation N2-87

$$COMP - TO - TWR - WTR = \left[1 + \frac{1}{\frac{\sum_{i=1}^{n} (COP_i \times SIZE_i)}{\sum_{i=1}^{n} SIZE_i}} \right] \times 2.4$$

where

COP_i = Coefficient of performance for chiller i

Equation N2-88

$$SIZE_i = \frac{Q_{des_i} \times 12{,}000}{1{,}000{,}000}$$

n = Number of chillers

Modeling Rules for Standard Design

~~ACMs~~Compliance software shall model the existing chiller(s) using the actual data. If the actual data is not available, ~~ACMs~~Compliance software shall model the

(Existing Unchanged):	existing design the same as the standard design.

2.5.3.15 Number, Selection, and Staging of Chillers and Boilers

Description:	The reference method accounts for staging of multiple cooling/heating units input for both the standard and proposed design.
DOE-2 Keyword(s)	INSTALLED-NUMBER TYPE
Input Type	Required
Tradeoffs	Yes
Modeling Rules for Proposed Design:	~~ACMs~~Compliance software shall model the number and staging of boilers and chillers as input and modeled by the user according to the plans and specifications for the building. All chiller plants over 300 tons shall limit the size of air-cooled chillers to 100 tons or less.
Modeling Rules for Standard Design (New):	The reference method selects the standard design chiller types as follows: • Total cooling plant load < 150 tons: the standard system uses one (1) water-cooled scroll chiller. • 150 tons ≤ total cooling plant load < 300 tons: the standard system uses one (1) water-cooled screw chiller. • 300 tons ≤ total cooling plant load ≤ 600 tons: the standard system uses two (2) equally sized water-cooled centrifugal chillers. • Total cooling plant load > 600 tons: the standard system uses a minimum of two (2) water-cooled centrifugal chillers but add machines as required to keep the maximum single unit size at or below 1000 tons. ~~ACMs~~Compliance software shall bring up each chiller to 90 percent capacity prior to the staging of the next chiller. ~~ACMs~~Compliance software shall model the staged chillers in parallel. The reference method selects the standard design boiler types as follows: • Total heating plant load < 6,000,000 Btuh: the standard system uses one (1) atmospheric boiler (no combustion air fan). • Total heating plant load ≥ 6,000,000 Btuh: the standard system uses two (2) atmospheric boilers (no combustion air fans) of equal size. ~~ACMs~~Compliance software shall bring up each boiler to 90 percent capacity prior to the staging of the next boiler. ~~ACMs~~Compliance software shall model the staged boilers in parallel.
Modeling Rules for Standard Design (Existing Unchanged & Altered Existing):	~~ACMs~~Compliance software shall model the number and staging of boilers and chillers as input and modeled by the user according to the existing design of the central heating and cooling plants.

2.5.3.16 Performance Curves for Gas Absorption and Electric Chillers

Description	The reference method models the performance curves of electric chillers as functions of variables such as the load, condenser water temperature, and flow rate. The reference program uses a computer program to calculate custom regression constants for gas absorption and electric chillers. This program calculates the regression constants for performance curves according to the following rules,

criteria, inputs, and outputs:

1. The curves are generated using ARI 550/590 or ARI 560 certified data.
2. The data have a minimum of 25 full-load points and 10 part-load points.
3. The full-load data represent a chilled water temperature range of (design-2) °F to (design+6) °F and a condenser water temperature range of 55°F to 85°F (or an outside ~~dry-bulb~~drybulb temperature range of 45°F to 110°F for air-cooled equipment).
4. The part-load data represent unloading using both condenser relief and fixed design condenser temperature.
5. The root mean square (rms) error for power prediction on the data set is 5 percent~~%~~ or less.
6. The program report the APLV points as entered by the user and the chiller curve predicted performance at the same conditions.
7. The user cannot directly modify either the curve coefficients or the parameters including reference capacity, reference power, minimum unloading ratio, or maximum available capacity.

The program inputs are:

1. Make and model,
2. Chiller type,
3. Evaporator flow rate,
4. Evaporator bundle pressure drop,
5. Chiller design capacity,
6. Chiller design input power (gas and electric separately),
7. Chiller design chilled water supply temperature, and
8. Chiller design entering condenser water temperature (water-cooled), or
9. Chiller design outdoor ~~dry-bulb~~drybulb temperature (air -cooled), and
10 Chiller APLV capacity,
11. Chiller APLV input power (gas and electric separately),
12. Chiller APLV chilled water supply temperature, and
13. Chiller APLV entering condenser water temperature (water-cooled), or
14. Chiller APLV outdoor ~~dry-bulb~~drybulb temperature (air-cooled).

The program outputs are:

1. Predicted Coefficient Of Performance (COP) to within 5 percent~~%~~ of the manufacturer's data,
2. Four predicted APLV points with a maximum rms error of 5 percent of the manufacturer's data, and
3. Regression coefficients.

For all of the chiller curves, there is a rated condition at which the curves are unity. These are a rated capacity and efficiency at full load and specific chilled water and

condenser water supply temperatures. The default curves in DOE2.1E are all rated at 44°F chilled water supply temperature and 85°F condenser water supply temperature. These are the ARI 550/590 rating conditions. For custom curves these references will be $CHWS_{des_i}$ and CWS_{des_i} (or OAT_{des_i} for air-cooled equipment).

Three curves are used to determine the performance of each chiller:

EIR-FPLR	Percentage full-load power as a function of percentage full-load output.
CAP-FT	Capacity correction factor as a function of chilled water supply temperature and condenser water supply temperature.
EIR-FT	Efficiency correction factor as a function of chilled water supply temperature and condenser water supply temperature.

For air-cooled equipment the CAP-FT and EIR-FT curves are developed against the chilled water supply and outside air ~~dry-bulb~~drybulb temperatures.

Each of the default curves are given in terms of regression constants (a through f). The regression equations have the following formats:

Equation N2-89

$$CAP_FT = a + b \times CHWS + c \times CHWS^2 + d \times CWS + e \times CWS^2 + f \times CHWS \times CWS$$

$$EIR_FT = a + b \times CHWS + c \times CHWS^2 + d \times CWS + e \times CWS^2 + f \times CHWS \times CWS$$

$$PLR = \frac{Q}{Q_{des} \times CAP_FT(CHWS_{des}, CWS_{des})}$$

$$EIR_FPLR = a + b \times PLR + c \times PLR^2$$

For Gas Absorption Chillers EIR curve fits are replaced by HIR curve fits.

Equation N2-90

$$HIR_FT1 = a + b \times CHWX + c \times CHWX^2$$

$$HIR_FT2 = a + b \times CWS + c \times CWS^2$$

$$HIR_FPLR = a + b \times PLR + c \times PLR^2$$

$$EIR = QELEC / QCAPNOM$$

$$CAP_FT(CHWX) = 1.00$$

where:

PLR	Part load ratio based on available capacity (not rated capacity)
Q	Present load on chiller (in tons)
Q_{des}	Chiller design capacity (in tons)
CHWS	Chiller chilled water supply temperature ^oF
CHWX	Leaving chilled water temperature ^oF
CWS	Entering condenser water temperature ^oF
$CHWS_{des}$	Chiller design chilled water supply temperature ^oF
CWS_{des}	Design entering condenser water temperature ^oF

For air-cooled equipment OAT is used in place of CWS in the CAP_FT and EIR_FT

	equations, where OAT is the outdoor ~~dry-bulb~~drybulb temperature.
DOE-2 Command	
DOE-2 Keyword(s)	CURVE-FIT
Input Type	Default
Tradeoffs	Yes
Modeling Rules for Proposed Design:	The reference program uses a computer program with capabilities, calculation criteria, and input and output requirements as described above for producing regression constants for performance curves of electric chillers specified on the plans and specifications for the building.
Default:	Same regression constants and performance curves as those used for the standard design.
Modeling Rules for Standard Design (All):	~~ACMs~~Compliance software shall use the regression constants in Table N2-22 through Table N2-27 for the performance curves of electric chillers.

Table N2-22 – Default Capacity Coefficients for Electric Air-Cooled Chillers

Coefficient	Scroll	Recip	Screw	Centrifugal
A	0.40070684	0.57617295	-0.09464899	N/A
B	0.01861548	0.02063133	0.03834070	N/A
C	0.00007199	0.00007769	-0.00009205	N/A
D	0.00177296	-0.00351183	0.00378007	N/A
E	-0.00002014	0.00000312	-0.00001375	N/A
F	-0.00008273	-0.00007865	-0.00015464	N/A

Table N2-23 – Default Capacity Coefficients for Electric Water-Cooled Chillers

Coefficient	Scroll	Recip	Screw	Centrifugal
A	0.36131454	0.58531422	0.33269598	-0.29861976
B	0.01855477	0.01539593	0.00729116	0.02996076
C	0.00003011	0.00007296	-0.00049938	-0.00080125
D	0.00093592	-0.00212462	0.01598983	0.01736268
E	-0.00001518	-0.00000715	-0.00028254	-0.00032606
F	-0.00005481	-0.00004597	0.00052346	0.00063139

Table N2-24 – Default Efficiency EIR-FT Coefficients for Air-Cooled Chillers

Coefficient	Scroll	Reciprocating	Screw	Centrifugal
A	0.99006553	0.66534403	0.13545636	N/A
B	-0.00584144	-0.01383821	0.02292946	N/A
C	0.00016454	0.00014736	-0.00016107	N/A
D	-0.00661136	0.00712808	-0.00235396	N/A
E	0.00016808	0.00004571	0.00012991	N/A
F	-0.00022501	-0.00010326	-0.00018685	N/A

Table N2-25 – Default Efficiency EIR-FT Coefficients for Water-Cooled Chillers

Coefficient	Scroll	Reciprocating	Screw	Centrifugal
A	1.00121431	0.46140041	0.66625403	0.51777196
B	-0.01026981	-0.00882156	0.00068584	-0.00400363
C	0.00016703	0.00008223	0.00028498	0.00002028
D	-0.00128136	0.00926607	-0.00341677	0.00698793
E	0.00014613	0.00005722	0.00025484	0.00008290
F	-0.00021959	-0.00011594	-0.00048195	-0.00015467

Table N2-26 – Default Efficiency EIR-FPLR Coefficients for Air-Cooled Chillers

Coefficient	Scroll	Reciprocating	Screw	Centrifugal
A	0.06369119	0.11443742	0.03648722	N/A
B	0.58488832	0.54593340	0.73474298	N/A
C	0.35280274	0.34229861	0.21994748	N/A

Table N2-27 – Default Efficiency EIR-FPLR Coefficients for Water-Cooled Chillers

Coefficient	Scroll	Reciprocating	Screw	Centrifugal
A	0.04411957	0.08144133	0.33018833	0.17149273
B	0.64036703	0.41927141	0.23554291	0.58820208
C	0.31955532	0.49939604	0.46070828	0.23737257

2.5.3.17 Cooling Towers

Description: The ~~ACM~~compliance software cooling tower model shall, at a minimum, incorporate the following characteristics:

- *Open circuit*: Condenser water is cooled by evaporation by direct contact with ambient outdoor air stream.
- *Centrifugal or propeller fan*: A centrifugal or propeller fan provides ambient air flow across evaporative cooling media.
- *Staging of Tower Cells*: Capacity is varied by staging of tower cells.
- *Electrical input ratio*: The ratio of peak fan power to peak heat rejection capacity at rating conditions.

DOE-2 Keyword(s)
TYPE
INSTALLED-NUMBER
TWR-CELL-CTRL
TWR-CELL-MIN-GPM
MIN-RATIO
EIR
TWR-DESIGN-WETBULB
TWR-DESIGN-APPROACH
TWR-SETPT-T
TWR-CAP-CTRL

Input Type: Required

Tradeoffs: Yes

Modeling Rules for ~~ACMs~~Compliance software shall model cooling towers as follows:

Proposed Design:

Sizing. ~~ACMs~~Compliance software shall autosize the cooling tower using the following parameters:

1. 0.5 percent~~%~~ Cooling Design Wet-Bulb Temperature in Reference ~~Joint Appendix II~~~~Standards~~ Joint Appendix JA2.
2. Design Approach Temperature as input by the user according to the plans and specifications for the building.
3. Number of Tower Cells as input by the user according to the plans and specifications for the building.

If the number of cells is specified, then

INSTALLED-NUMBER = # of cells input by the user

If the number of cells is not specified, then

Equation N2-91

$$\text{INSTALLED} - \text{NUMBER} = \frac{\sum_{i=1}^{n} Q_{des_i}}{1000}$$

where:

Q_{des_i} = Chiller design capacity (in tons)

n = Number of chillers

Staging of Tower Cells. The user shall specify whether the tower is controlled with the minimum or maximum number of cells possible a to keep the flow rate per cell within the allowable minimum and maximum flow ranges.

Fan Control. ~~ACMs~~Compliance software shall accept input by the user for the cooling tower fan control according to the plans and specifications for the building.

Condenser Water Set-point Control. ~~ACMs~~Compliance software shall use a set-point temperature of 70 ^{o}F.

Electrical Input Ratio. ~~ACMs~~Compliance software shall calculate the Electrical Input Ratio (EIR) as follows:

Equation N2-92

$$EIR = \frac{HP_{CT} \times 2.545}{\sum_{i=1}^{n} (Q_{des_i} \times 12 + P_{des_i} \times 3.413)}$$

where:

HP_{CT} = Cooling tower nameplate horsepower per cell

Q_{des_i} = Chiller design capacity (in tons)

P_{des_i} = Chiller design input power (in kW)

n = Number of chillers

Modeling Rules for Standard Design (New):

The reference method uses a single cooling tower with the following features for the standard design system:

Sizing. ~~ACMs~~Compliance software shall autosize the cooling tower using the following parameters:

1. Design Wet-Bulb Temperature using 0.5 percent~~%~~ design ~~wet-bulb~~wetbulb column of ASHRAE publication SPCDX: Climatic Data for Region X, Arizona, California, Hawaii, and Nevada, 1982.
2. Design Approach Temperature of 10°F.
3. Number of Tower Cells equal to the proposed design. If the proposed design uses air-cooled chillers (no cooling towers), the number of Tower Cells shall be equal to the number of chillers in the standard design.

Staging of Tower Cells. The standard design shall use a control scheme to use the maximum number of cells possible and stage on as many cells as can be staged to keep the flow rate per cell above 50 percent of maximum.

TWR-CELL-CTRL = MAX-CELLS

Fan Control. The standard design shall use a two-speed fan control system.

TWR-CAP-CTRL = TWO-SPEED-FAN

Fan Speed. The standard design shall use the following setting for minimum fan speed.

TWR-CELL-MIN-GPM = 0.33

Condenser Water Set-point Control. The standard design shall use the same set-point temperature as the proposed design.

Electrical Input Ratio. The standard design shall use an EIR of 0.0133.

Modeling Rules for Standard Design (Existing Unchanged & Altered Existing):

~~ACMs~~Compliance software shall model the existing cooling tower(s) using the actual data. If the actual data is not available, ~~ACMs~~Compliance software shall model the existing design the same as the standard design.

2.5.3.18 HVAC Distribution Efficiency of Packaged Equipment

Scope	These modeling rules apply for packaged equipment with ducts in unconditioned buffer spaces or outdoors as specified in ~~Section~~§ 144(k)~~ of the Standards~~.
Description:	~~ACMs~~Compliance software shall be able to determine the efficiency of ducts in unconditioned buffer spaces or outdoors. ~~ACMs~~Compliance software shall require the user to enter the duct insulation R-value, the number of building stories, and whether or not the ducts will be sealed and tested for reduced duct leakage.
DOE-2 Command	
DOE-2 Keyword(s)	None. Duct efficiency divisors for COOLING-EIR, COOLING-EIR-SEER and HEATING-HIR will be calculated by means of the equations in ~~Appendix ACM~~Standards~~-~~ Reference Nonresidential Appendix NA2~~5 NG~~.
Input Type	Default
Tradeoffs	Yes

Modeling Rules for Proposed Design:	The ~~ACM~~compliance software shall calculate the duct efficiency for the Proposed Design as specified in Reference Nonresidential Appendix NA2, Sections 2.3, and ~~Appendix ACMcompliance software NG~~ based on the user inputs specified in this section. The ~~ACM~~compliance software shall require the user to input duct R-value, the number of building stories, the presence of a cool roof, and whether or not credit for reduced duct leakage will be claimed and tested.
Default:	Duct R-value of 8.0 [$h^oF\ ft^2$/Btu] and duct leakage of 8 percent~~%~~ of fan flow. Number of stories is defaulted to one (1).
Duct Sealing Caution	Warning on PERF-1 if improved HVAC distribution efficiency through duct sealing is claimed. Warning shall include minimum qualification criteria described in ~~Standards~~Reference-Nonresidential Appendix NA2~~5~~~~Appendix ACM NG~~, Section 2.3 ~~NG~~~~SNA. 4.3.8~~.
Modeling Rules for Standard Design (New):	The ~~ACM~~compliance software shall use the duct leakage factors for duct systems in newly constructed buildings from Reference Nonresidential Appendix, Table NA2-1 ~~Table NG~~~~SNA-2 of Standards Nonresidential Appendix 5~~~~Appendix ACM NG~~ for the Standard Design.
Modeling Rules for Standard Design (Existing Unchanged & Altered Existing):	See Section 3.1.3 on duct sealing in alterations and additions.

2.5.3.19 HVAC Transport Efficiency

Description:	~~ACMs~~Compliance software shall report the ratio between the energy expended to transport heating, cooling and ventilation throughout the building, and the total thermal energy delivered to the various zones in the building.
Modeling Rules:	The transport energy includes all distribution-fan, ventilation-fan and non-DHW pump consumption, and the thermal energy delivered is the sum of all zone loads. This ratio shall be calculated both over the course of the year, and under design conditions. TE = (distribution fan energy + ventilation fan energy + non-DHW pump energy)/(total thermal load)

2.6 Service Water Heating

Compliance software shall be capable of modeling service water heating systems for nonresidential and high-rise residential buildings. The service water heating system shall be modeled whether or not it is part of combined hydronic system that serves both space and service water heating demands. Compliance software are required to model independent systems for service water heating. Compliance software shall require the user to identify if service water heating is included in the performance compliance submittal. Compliance software shall also require the user to identify the type of service water heating systems as described below and in Residential RACM Appendix E~~RG of the residential ACM manual. ACMsCompliance software shall be capable of modeling service water heating systems for nonresidential and high-rise residential buildings. The service water heating system shall be modeled whether or not it is part of combined hydronic system that serves both space and service water heating demands. ACMsCompliance software are required to model independent systems for service water heating. ACMsCompliance software shall require the user to identify if service water heating is included in the performance compliance submittal. ACMsCompliance software shall also require the user to identify the type of service water heating systems as described below and in Appendix RG of the residential ACM manual.~~

2.6.1 Nonresidential Service Water Heating ~~(Including Hotels Guest Rooms)~~

~~ACMs~~Compliance software shall be able to accept inputs to distinguish electric or gas water heating systems and shall either assume part-load performance curves for the types of water heaters allowed to be entered OR allow entry of an efficiency (some sort of annual or seasonal efficiency is preferred but a steady state efficiency is acceptable) for the water heating system. The ~~ACM~~compliance software shall be able to accept inputs from the user for a recirculating water heating system or an electrically traced (electric tape) water heating system.

The standard water heating system includes a water heater of the same type as defined in the proposed with an efficiency as required by the Appliance Efficiency Regulations ~~or Table 112-F of the Standards~~. All pipes in the standard design system shall be insulated as required.

~~The standard water heating system for either of these two systems is a water heating system with all hot water pipes insulated and a gas boiler with an efficiency as required by the Appliance Efficiency Standards or Table 112-F of the Standards. For hotels and high-rise residential buildings, the standard water heating system is a recirculating system.~~

Water heating shall be modeled using the hourly loads for each occupancy as shown in Table N2-5 or Table N2-6, multiplied by the fraction of load in each hour shown in the water heating schedule in the standard schedules; ~~T~~these loads shall be combined for each zone to develop a total building water heating load for each hour. Each water heater shall be assigned an individual load, and shall be modeled independent of other water heaters.

2.6.1.1 Algorithms and Assumptions

For nonresidential buildings, the hourly water heating energy use shall be determined from Equation N2-93.

Equation N2-93

$$WHEU_n = SRL \times F_{whpl(n)} \times DHWHIR \times HIRCOR$$

where

$WHEU_n$ = Water heating energy use for the nth hour

$F_{whpl(n)}$ = Hourly load multiplier for the nth hour from Table N2-7 through Table N2-11

SRL = Standard Recovery Load in Btu/hr, derived from the loads per person shown in Table N2-1 or N2-2 for the occupancy served by the water heater. If a water heater may serve more than one occupancy, the load should be weighted by the number of square feet in each occupancy served by the water heater.

DHWHIR = Heating input ratio of the water heater(s) which is equal to the inverse of the recovery efficiency (RE) or thermal efficiency (TE). The recovery efficiency for electric water heaters is 0.98.

HIRCOR = Part-load correction factor

HIRCOR is determined from the following procedure, given in the form of a DOE 2.1 curve fit instruction:

DHW-HIR-FPLR = ACM-DHW-CRV

ACM-DHW-CRV = CURVE-FIT

TYPE = LINEAR

COEFFICIENTS = (DHW-A,DHW-B)

These commands yield an equation for HIRCOR of:

$$HIRCOR = (DHW\text{-}A) + (DHW\text{-}B) \times PLR$$

Where:

Equation N2-94

$$DHW - A = \frac{STBY}{INPUT}$$

Equation N2-95

$$DHW - B = \frac{(INPUT \times RE^*) - STBY}{SRL}$$

* or Thermal Efficiency (*TE*)

PLR_n = Part-load ratio for the nth hour and shall always be less than 1. PLR_n is calculated from the following equation:

Equation N2-96

$$PLR_n = \frac{SRL \times F_{whpl(n)}}{INPUT \times RE^*}$$

* or Thermal Efficiency (*TE*)

INPUT = The input capacity of the water heater expressed in Btu/hr.

STBY = Hourly standby loss expressed in Btu/hr. For equipment not listing STBY and all other systems, refer to Equation N2-97 and Equation N2-98. ~~For large storage gas water heaters STBY is listed in the CEC's appliance database. The value includes pilot energy and standby losses. For all other systems refer to Equation N2-82.~~

For Boilers, Instantaneous gas or other storage type water heaters, not in the scope of Covered Consumer Products as defined in the Title 10 or the Code of Federal Regulations, Part 430;

Equation N2-97

$$STBY = 453.75 \times S \times VOL$$

where

S = The standby loss fraction listed in the Commission's Appliance Database of Certified Water Heaters,

VOL = The actual storage capacity of the water heater as listed in the Commission's Appliance Database of Certified Water Heaters,

For storage type water heaters that are NAECA covered products, the standby loss shall be calculated with the following equation.

Equation N2-98

$$STBY = \frac{1440.104 \times \left(\frac{1}{EF} - \frac{1}{RE^*}\right)}{\left(1 - \frac{1701.941}{(INPUT \times RE^*)}\right)}$$

* or Thermal Efficiency (*TE*)

where:

EF = Energy Factor

For instantaneous water heaters with no supplemental storage that are not Covered Consumer Products,

STBY = PILOT, otherwise standing pilot energy should be added to the value in Equation N2-98~~equation N2-99~~ to determine standby loss.

Where PILOT is the pilot light energy use in Btu/hr

Required inputs and standard and proposed design assumptions depend on the type of water heater and whether or not it is a DOE covered consumer product.

2.6.1.2 DOE Covered Water Heaters

Description:	~~ACMs~~Compliance software shall require the user to enter fuel type (electricity or gas), input, volume, energy factor, recovery efficiency or thermal efficiency, and quantity for DOE covered storage-type water heaters.
DOE-2 Keyword(s)	DHW-TYPE DHW-SIZE DHW-EIR DHW-EIR-FT DHW-EIR-FPLR
Input Type	Required
Tradeoffs	~~Neutral~~Yes
Modeling Rules for Proposed Design:	The proposed design shall assume fuel type, input, volume, energy factor, recovery efficiency or thermal efficiency, and quantity as input by the user and as shown in the construction document for the building.
Modeling Rules for Standard Design (All):	The standard water heating system includes a water heater of the same type as defined in the proposed with an efficiency as required by the Appliance Efficiency Regulations. ~~or Table 112-F of the Standards~~. All pipes in the standard design system shall be insulated as required.~~The standard water heating system is a gas fired system with the efficiency equal to that required by the Appliance Efficiency Standards or Table 112-F of the Standards. The capacity and type of system shall be defined as follows. All non-central water heating systems shall use a standard design based on a 40 gallon gas water heater with an input less than 75000 Btu/hr per tenant space. All central water heater systems shall use a boiler for the standard design. Standard design systems shall assume that all hot water pipes insulated and a gas fired water heater or boiler.~~The standard design shall assume fuel type, input, volume, recovery efficiency or thermal efficiency, and quantity identical to the proposed design. The standard design shall assume an energy factor, calculated as a function of the volume, according to equations found in the Appliance Efficiency Regulations.

2.6.1.3 Water Heaters not Covered by DOE Appliance Standards

Description:	~~ACMs~~Compliance software shall require the user to enter fuel type, input, volume, recovery efficiency or thermal efficiency, standby loss and quantity for all storage type water heaters that are not covered by DOE appliance standards.
DOE-2 Command	
DOE-2 Keyword(s)	DHW-TYPE DHW-SIZE DHW-HEAT-RATE DHW-EIR DHW-EIR-FT DHW-EIR-FPLR DHW-LOSS
Input Type	Required
Tradeoffs	~~Neutral~~Yes
Modeling Rules for Proposed Design:	The proposed design shall assume fuel type, input, volume, recovery efficiency or thermal efficiency, standby loss and quantity as input by the user and as shown on the construction documents for the building.
Modeling Rules for Standard Design	The standard water heating system includes a water heater of the same type as defined in the proposed with an efficiency as required by the Appliance Efficiency

(All): Regulations. ~~or Table 112-F of the Standards.~~ All pipes in the standard design system shall be insulated as required. ~~The standard water heating system is a gas fired system with the efficiency equal to that required by the Appliance Efficiency Standards or Table 112-F of the Standards. The capacity and type of system shall be defined as follows. All non-central water heating systems shall use a standard design based on a 40 gallon gas water heater with an input less than 75000 Btu/hr per tenant space. All central water heater systems shall use a boiler for the standard design. Standard design systems shall assume that all hot water pipes insulated and a gas fired water heater or boiler. The standard design shall assume fuel type, input, volume and quantity that are identical to the proposed design. The standard design shall assume recovery efficiency or thermal efficiency and standby loss as specified in either Section 111 or 113 of the Building Energy Efficiency Standards.~~

2.6.1.4 Boilers

If a boiler (or boilers) serve both space and service water heating systems, the ~~ACM~~compliance software shall assign space heating and recovery loads to the boiler for both the standard and proposed designs. Boilers shall be simulated as described in Section 2.5.2.12.

2.6.1.5 Unfired Indirect Water Heaters (Storage Tanks)

~~ACMs~~Compliance software shall simulate jacket losses and effective recovery efficiency for unfired indirect water heaters and storage tanks. Jacket losses shall be calculated using the following equation:

Equation N2-100

$$JL = \frac{117.534VOL^{0.66} + 99.605VOL^{0.33} + 21.103}{REI} + 61.4$$

where:

JL	=	Hourly jacket loss in Btu
VOL	=	Volume of indirect heater or storage tank in gallons
REI	=	R-value of exterior insulating wrap

The adjusted hourly recovery load seen by the primary water heating devices described above (e.g. water heater or boiler) shall be calculated according to Equation N2-101.

Equation N2-101

$$PARL_n = \frac{SRL \times F_{whpl(n)} \times JL}{0.98}$$

Where:

$PARL_n$ = Adjusted recovery load seen by the primary water heating device for the nth hour

DOE-2 Command	
DOE-2 Keyword(s)	DHW-LOSS
Input Type	Required
Tradeoffs	Yes~~Neutral~~
Modeling Rules for Proposed Design:	~~ACMs~~Compliance software shall assume indirect water heaters with volume and REI as input by the user and as shown in the construction documents for the building. ~~ACMs~~Compliance software shall not allow the user to enter an REI of less than 12.

Modeling Rules for Standard Design (All):	If an indirect water heater is input as part of the proposed design, that standard design shall assume an indirect heater with the same volume as the proposed design and REI of 12.

2.6.2 High-Rise Residential Hotel/Motel Water Heating Calculation Methods

For ~~hotels, motels and~~ high-rise residential buildings, hotels and motels, ~~ACMs~~c~~C~~ompliance software shall calculate the energy consumption of the proposed water heating system(s) and the water heating energy budget in accordance with procedures in the Residential ACM Manual, and Residential ACM Manual Appendix E~~RG~~. ~~Alternatively, users may show service water heating compliance using the prescriptive requirements of Section 14~~5~~551(a)(f)(8) of the Standards. In this case, water heating is left out of the performance calculations.~~

3. Optional Capabilities

Candidate ~~ACM~~compliance ~~s~~software may have more capabilities than the minimum required. These *optional capabilities* can be approved for use with the ~~ACM~~compliance software for compliance purposes. Optional capabilities may not have specific capability tests in Chapter 5. Applicants wishing to receive approval for optional capabilities shall document the capability as required in this chapter and be prepared to defend the technical accuracy of any optional modeling capabilities during the ~~ACM~~compliance software approval process.

The Commission does not require a~~n~~ ~~ACM~~compliance software to incorporate optional capabilities, accept inputs for optional capabilities (except for *optional compliance capabilities*), or use optional capabilities procedures in order to become certified. If a~~n~~ ~~ACM~~compliance software offers optional capabilities to the user, the specific capabilities shall be certified by the Commission and the ~~ACM~~compliance software shall meet all special conditions, conform to all required calculation procedures, and pass certification tests (when applicable). The special conditions may include the ability to accept special input and produce special output. The assumptions for the optional capabilities shall be included in the vendor's submittal for optional capabilities as described later in this chapter. For the purpose of compliance, the use of any optional capability is considered an exceptional condition requiring special reporting on the certificate of compliance.

Optional capabilities and any non-required ~~ACM~~compliance software inputs that modify ~~ACM~~compliance software results in such a way that can result in the ~~ACM~~compliance software failing to meet the approval criteria for any test in Chapter 5 are specifically prohibited, unless their use has been approved by the Commission as an optional capability. This is especially true for inputs and capabilities that cannot be modeled using the reference computer program. This does not mean that ~~ACM~~compliance ~~s~~software may not differ in their inputs. For example, ~~one ACM~~compliance software may accept wall heat capacity as an input, while another may use volume, density, and specific heat of the component wall materials to calculate the heat capacity, while another still may assume a heat capacity as a function of wall type. But no ~~ACM~~compliance software may have an input, for example, for mass of phase change material in the wall and material phase change temperature without specific prior written approval of that capability and its associated inputs, outputs, and internal defaults and restrictions.

If any optional capability is modeled, the option shall be specified on the appropriate compliance form which is automatically generated by the ~~ACM~~compliance software. Additionally, any optional capability used in compliance shall be listed on the Certificate of Compliance as an exceptional condition.

The ~~ACM~~compliance software approval application (see ACM Appendix ~~N~~A) shall list and describe (or reference the description in the ACM User's Manual) all optional capabilities which are certified for compliance.

3.1 Alternations and Additions

The following optional alternations and additions capabilities may be allowed by nonresidential ~~ACM~~compliance ~~s~~software. There are specific output requirements for these options which are described in this Section and Section 2.2 Compliance Documentation.

3.1.1 Additions & Alterations

If the ~~ACM~~compliance software is approved for the optional capabilities of alterations or automated calculation of Addition plus Existing Building, the ~~ACM~~compliance software shall produce approved additional forms for existing building components and systems in accordance with the procedures described in Section 2.2 Compliance Documentation.

The Addition plus Existing Building calculation may also be performed by performing two separate runs. The first run is used to determine the budget for the existing building prior to the addition or alterations and the budget for a standard building similar to the existing building. These budgets are taken from the output for the proposed and standard building energy consumption using either the diagnostic output (if the existing building does not comply) or information from the PERF-1. The addition is modeled separately in the second run to

determine the target budget for the addition space from the budget for the standard building for the addition. The budgets for these spaces are combined to determine a target budget for the combination of the two spaces. Budgets given in energy use per square foot per year are area weighted while budgets given in energy use per year for the total area can be added together.

The altered existing building plus the addition can then be modeled and the proposed building budget from that run shall be less than the combined budget for the spaces above to get compliance.

When the addition is modeled separately and the existing HVAC system is to be expanded to serve both existing and new spaces, the HVAC system for the addition shall be modeled as a separate HVAC system of the same type as the existing HVAC system with similar efficiency characteristics (EER, COP, FPI, etc.)

3.1.2 Alteration or Addition Plus Altered Existing

~~ACMc~~Compliance ~~s~~software that allow automated analysis of alterations of an existing building or an addition in conjunction with an existing building with alterations shall perform compliance analysis of additions and alterations according to ~~Section~~§ 149~~ of the Standards~~. This procedure also requires special and specific input and reporting procedures that complement the reporting requirements for a new building alone.

~~ACMc~~Compliance ~~s~~software may use a two pass compliance procedure for an Addition plus Existing Building analysis. This technique requires the modeling of two different proposed designs with the ~~ACM~~compliance software: (1) existing building and (2) the altered existing building combined with the proposed addition.

3.1.3 Duct Sealing in Additions and Alterations

Section 149(a)1 establishes prescriptive requirements for duct sealing in additions and ~~Sections~~ §§ 149(b)1.C. and 149(b)1.D. establish prescriptive requirements for duct sealing and duct insulation for installation of new and replacement duct systems and duct sealing for installation of new and replacement space conditioning equipment. Reference Nonresidential Appendix NA2 Table ~~NG~~NA~~5~~-2-1 provides Duct Leakage Factors for modeling of sealed and tested new duct systems, sealed and tested duct systems in existing buildings, and untested duct systems. Reference Nonresidential Appendix ~~NG~~NA~~5~~2 provides procedures for duct leakage testing and Table ~~NG~~NA~~5-3~~2-2 provides duct leakage tests and leakage criteria for sealed and tested new duct systems and sealed and tested existing duct systems. These requirements, factors, procedures, tests and criteria apply to performance compliance for duct sealing in Additions and Alterations. The following table specifies the Proposed Design and Standard Design for Additions and Alterations.

Condition	*Proposed Design*	*Standard Design*
Additions Served by Entirely New Duct Systems	The Proposed Design shall be either sealed and tested new duct systems or untested duct systems.	**The Standard Design shall be sealed and tested new duct systems.**
Additions Served by Extensions of Existing Duct Systems	The Proposed Design shall be either 1) sealed and tested new duct systems, if the total combined existing plus new duct system meets the leakage requirements for tested and sealed new duct systems; 2) sealed and tested duct systems in existing buildings, if the total combined existing plus new duct system meets the leakage requirements for tested and sealed duct systems in existing buildings; or 3) untested duct systems.	The Standard Design shall be sealed and tested duct systems in existing buildings.

Condition	*Proposed Design*	*Standard Design*
Alterations with Prescriptive Duct Sealing Requirements when Entirely New Duct Systems are Installed	The Proposed Design shall be either 1) sealed and tested new duct systems; or 2) untested duct systems.	The Standard Design shall be sealed and tested new duct systems.
Alterations with Prescriptive Duct Sealing Requirements when Existing Duct Systems are extended or replaced or when new or replacement air conditioners are installed	The Proposed Design shall be either 1) sealed and tested new duct systems, if the total combined existing plus new duct system meets the leakage requirements for tested and sealed new duct systems; 2) sealed and tested duct systems in existing buildings, if the total combined existing plus new duct system meets the leakage requirements for tested and sealed existing duct systems; or 3) untested duct systems.	The Standard Design shall be sealed and tested duct systems in existing buildings.
Alterations for which Prescriptive Duct Sealing Requirements do not apply	The Proposed Design shall be either 1) sealed and tested new duct systems, if the new duct system or the total combined existing plus new duct system meets the leakage requirements for tested and sealed new duct systems; 2) sealed and tested duct systems in existing buildings, if the total combined existing plus new duct system meets the leakage requirements for tested and sealed existing duct systems; or 3) untested duct systems.	The Standard Design shall be untested duct systems.

3.1.4 Output Reports for Existing Buildings

There are special output requirements for existing building components and characteristics that are passed directly to the standard design and compared against themselves in the custom budget process. In general, these shall be reported on separate forms and in a distinctly different typestyle from new or altered building components and characteristics in output reports. To accommodate all printers this is done by using lowercase and UPPERCASE output to differentiate these inputs. See Section 2.2 Compliance Documentation for more details.

To accommodate the optional capabilities of partial compliance and modeling additions with the existing building and alterations and deter circumvention of the standards, all ~~ACM~~compliance ~~s~~software SHALL report all new or altered user-entered building components and descriptive information completely in UPPERCASE TYPE. ~~ACM~~Compliance ~~s~~software with the capabilities for partial compliance, modeling additions with the existing building or modeling alterations in an existing building SHALL report all information on existing, previously-approved building components that are not altered in lowercase type. This is to insure that the local enforcement agency can readily determine the use of existing building components that do not have to meet the requirements of the building energy efficiency standards and distinguish these modeled components from those that are new or have been altered.

3.2 Building Occupancy

3.2.1 Alternate Occupancy Selection Lists

The user of a~~n ACM~~compliance software shall select an occupancy type from certain allowed tables. ~~ACM~~Compliance ~~s~~software that do not have separate selection lists for ventilation occupancy assumptions and all other occupancy assumptions shall allow the user to select from the occupancies and sub-occupancies listed in Table N2-~~2~~5 and Table N2-~~3~~6 or to select from an officially approved alternative sub-occupancy list that-maps into those occupancies. ~~ACM~~Compliance ~~s~~software that have separate occupancy selection lists for ventilation assumptions and other assumptions shall use the occupancy selections given in tables in the building energy efficiency standards or approved alternative lists of occupancies. The occupancies listed in Table 121-A in the Standards shall be used for ventilation occupancy selections and the occupancies listed in Table 146-~~C~~ F in the Standards shall be used for selecting the remaining occupancy assumptions. Alternatively specific occupancy selection lists approved by the Commission that map into Tables 121-A or 146-~~C~~ F may be used.

A building consists of one or more occupancy types. ~~ACM~~Compliance ~~s~~software may not combine different occupancy types. Tables N2-~~2~~5 and N2-~~3~~6 describe all of the schedules and full load assumptions for occupants, lighting, infiltration, receptacle loads and ventilation. Full load assumptions are used for both the proposed design and the standard design compliance simulations.

~~i. Description:~~

~~ii. Lighting controls have specific lighting power adjustment factors as listed in Table 146-A of the standards and any ACMcompliance software may use these lighting control credits (subject to the requirements and specifications in Section 119 of the standards) just as they would with prescriptive compliance, except for the performance approach, credit cannot be taken for lighting controls that are required by other provisions of the standards, especially Sections 119 and 131. For lighting controls required by 131(c)2 (either a multi-level automatic daylighting control or an astronomical multi-level time switch control), no credit is permitted for the minimally compliant control (astronomical multi-level time switch control), which is modeled in both the proposed building and the standard building. However, if automatic multi-level daylighting controls are used, the proposed building benefits from an additional lighting power reduction. The ACMcompliance software program's Compliance Documentation shall describe how to determine which controls can be used for credit subject to this restriction. ACMcompliance ssoftware may explicitly model any of the lighting controls listed in Table 146-A of the standards. The ACMcompliance software shall require the user to input: 1) the area occupancy to which lighting controls are being applied; and, 2) the lighting control strategy or strategies being used. ACMcompliance ssoftware allow input for lighting control only when an area occupancy type has been input for the zone. ACMcompliance ssoftware with this optional capability shall automatically generate a LTG-3, Lighting Controls Credit Worksheet, as part of the compliance documentation.~~

~~iii. DOE Keyword:~~

~~iv. LIGHTING-W/SQFT~~

~~v. Input Type:~~

~~vi. Required~~

~~vii. Tradeoffs:~~

~~viii. Yes~~

~~ix. Mod~~

~~x. The ACMcompliance software shall model lighting~~

~~eling Rules for Proposed Design:~~	~~controls in the proposed design as input by the user according to plans and specifications for the building.~~
~~xi. Modeling Rules for Standard Design (New & Altered Existing):~~	~~xii. The standard design shall model only the lighting controls that are required by other provisions of the standards~~
~~xiii. Modeling Rules for Standard Design (Existing Unchanged):~~	~~xiv. The standard design shall model lighting controls that are installed in the existing building.~~

3.2.2 Light Heat to Zone

Description:	The reference method assumes that 100 percent~~%~~ of the heat due to lighting goes to the zone where the lighting is located. An optional capability may vary the lighting heat to the zone from 70 percent~~%~~-100 percent~~%~~ and, consequently, the lighting heat to the return air from 0 percent~~%~~ to 30 percent~~%~~, as a function of the type of lighting fixtures used in the zone. In the absence of persuasive evidence to the contrary, direct user entry of the allocation of lighting heat to the zone and the return air is considered an enforcement problem and is considered grounds for disqualification of ~~an ACM~~compliance software from the approval process.
DOE Keyword:	LIGHT-TO-SPACE
Input Type:	Required
Tradeoffs:	Neutral
Modeling Rules for Proposed Design:	~~ACM~~Compliance ~~s~~software shall model the lighting heat-to-space and lighting heat-to-return air bases on the type of lighting fixtures used in the space as shown in the construction documents.
Modeling Rules for Standard Design (New & Altered Existing):	The standard design shall use the same lighting heat-to-space and lighting heat-to-return air as the proposed design.
Modeling Rules for Standard Design (Existing Unchanged):	The standard design shall model lighting heat-to-space and lighting heat-to-return air based on the lighting fixtures installed in the existing building.

3.3 HVAC Systems and Plants

This section describes the optional HVAC systems and plant capabilities. The ~~ACM~~compliance software shall use the performance curves in the DOE-2 Supplement (Version 2.1E). If the described optional capability is not a capability of the Commission's reference computer program, vendors shall include the required performance data for that capability. The assumptions in this section may be different than the corresponding assumptions specified in the Required Systems and Plant Capabilities, in order to model optional capabilities accurately.

Standard design requirements are labeled as applicable to one of the following options:

- Existing unchanged
- Altered existing
- New
- ~~All~~Removed

~~with~~With the default condition for these four specified conditions being "~~All~~New." ~~An ACMc~~Compliance software without the optional capability of analyzing additions or alterations shall classify and report all surfaces as "~~All~~New."

3.3.1 Absorption Cooling Equipment

Description:	~~ACM~~Compliance ~~s~~software may model heat operated (absorption) cooling equipment with the following features: • *One-stage absorption.* Heat operated water chiller. With this option, the ~~ACM~~compliance software shall account for absorber and refrigerant pump energy and purge cycle. • *Two-stage absorption.* Heat operated water chiller using two-stage or double effect concentrator. With this option, the ~~ACM~~compliance software shall account for absorber and refrigerant pump energy and purge cycle. • *Economizer.* For absorption chiller, absorber solution flow to the concentrator is modulated as a function of load. • *Steam fired.* Absorption chiller uses steam as the heat source. • *Hot water fired.* Absorption chiller uses hot water as the heat source. • *Direct fired.* Absorption chiller uses fossil fuel as heat source.
DOE Keyword:	PLANT-EQUIPMENT ABSOR1-CHLR ABSOR2-CHLR ABSORG-CHLR
Input Type:	Required
Tradeoffs:	Yes
Modeling Rules for Proposed Design:	The ~~ACM~~compliance software shall model absorption equipment in the proposed design as input by the user according to the plans and specifications for the building. The ~~ACM~~compliance software shall use performance relationships according to the DOE 2.1E default equipment curves or the user shall enter manufacturer's performance data for gas absorption chillers as described in Section 2.5.3.16 and the ~~ACM~~compliance software shall use the performance curves derived from the user-entered data.
Modeling Rules for Standard Design (New):	~~ACM~~Compliance ~~s~~software shall determine the standard design according to the requirements of the Required Systems and Plant Capabilities and Section 2.5.3.16.
Modeling Rules for Standard Design (Existing Unchanged & Altered Existing):	~~ACMc~~Compliance ~~s~~software shall model the existing system as it occurs in the existing building. If the permit involves alterations, ~~ACM~~compliance ~~s~~software shall model the system before alterations.

3.3.2 Gas-Engine Driven Chillers and Heat Pumps

Description:	~~ACM~~Compliance ~~s~~software may model engine driven cooling equipment with the following features: • *Engine Driven Chiller.* Fossil fuel engine driven, compressor water chiller. • *Engine Driven Heat Pump.* Fossil fuel engine driven heat pump. • *Air Cooled Condenser.* Chiller or Heat Pump uses water to cool condenser.

- *Water Cooled Condenser.* Chiller or Heat Pump uses water to cool condenser.
- *Engine Waste Heat Recovery.* Waste heat is recovered from engine coolant for reuse in a space heating application.
- *Exhaust Heat Recovery.* Heat is extracted from engine exhaust gases for reuse in a space heating application (see Section 3.3.4).

DOE Keyword:	PLANT-EQUIPMENT ENG-CHLR or HEAT-SOURCE GAS-HEAT-PUMP
Input Type:	Required
Tradeoffs:	Yes
Modeling Rules for Proposed Design:	The ~~ACM~~compliance software shall model gas engine driven equipment in the proposed design as input by the user according to the plans and specifications for the building. The ~~ACM~~compliance software shall use performance relationships as established by the DOE 2.1 default equipment curves.
Modeling Rules for Reference Standard Design (New):	~~ACMc~~Compliance ~~s~~software shall determine the standard design according to the requirements of the Required Systems and Plant Capabilities and Chapter 2 Table N2-10..
Modeling Rules for Reference Standard Design (Existing Unchanged & Altered Existing):	~~ACM~~Compliance ~~s~~software shall model the existing system as it occurs in the existing building. If the permit involves alterations, ~~ACM~~compliance ~~s~~software shall model the system before alterations.

3.3.3 Chiller Heat Recovery

Description:	~~ACM~~Compliance ~~s~~software may model double bundle condensers on cooling equipment for heat recovery.
DOE Keyword:	N/A
Input Type:	Required
Tradeoffs:	Yes
Modeling Rules for Proposed Design:	The ~~ACM~~compliance software shall model heating equipment options in the proposed design as input by the user according to the plans and specifications for the building.
Modeling Rules for Standard Design (New):	The ~~ACM~~compliance software shall model the standard design according to the requirements of the Required Systems and Plant Capabilities.
Modeling Rules for Standard Design (Existing Unchanged & Altered Existing):	~~ACM~~Compliance ~~s~~software shall model the existing system as it occurs in the existing building. If the permit involves alterations, ~~ACM~~compliance ~~s~~software shall model the system before alterations.

3.3.4 Exhaust Heat Recovery

Description:	~~ACM~~Compliance ~~s~~software may model the following methods of heat recovery as input by the user.

- *Heat pipe.* Heat recovered from exhaust air is transferred to supply air via passive heat transfer coil (typically using refrigerant as the medium). No mechanical energy is required for heat recovery. With this option, the ~~ACM~~compliance software shall account for additional coil pressure drops.
- *Hydronic loop.* Heat recovered from exhaust air is transferred to supply air via hydronic system including coils in each air stream and water circulation system (run-around system). With this option, the ~~ACM~~compliance software shall account for circulating pump energy and accounts for additional coil pressure drops.
- *Heat wheel sensible.* Heat recovered from exhaust air is transferred to supply air via mechanically rotating heat wheel. The wheel may transfer sensible heat. With this option, the ~~ACM~~compliance software shall account for heat wheel motor energy and accounts for additional coil pressure drops.

DOE Keyword:	RECOVERY-EFF SUPPLY-1 thru SUPPLY-5 DEMAND-1 thru DEMAND-5
Input Type:	Required
Tradeoffs:	Yes
Modeling Rules for Proposed Design:	The ~~ACM~~compliance software shall model heat recovery options in the proposed design as input by the user according to the plans and specifications for the building.
Modeling Rules for Standard Design (New):	The ~~ACM~~compliance software shall model the standard design according to the requirements of the Required Systems and Plant Capabilities.
Modeling Rules for Standard Design (Existing Unchanged & Altered Existing):	~~ACM~~Compliance ~~s~~software shall model the existing system as it occurs in the existing building. If the permit involves alterations, ~~ACM~~compliance ~~s~~software shall model the system before alterations.

3.3.5 Optional System Types

Description

~~ACM~~Compliance ~~s~~software may model HVAC system types not included in the list of 5 minimum standard and proposed system types. Specifically, ~~ACM~~compliance ~~s~~software may model the following proposed system types:

- **System 6:** Hydronic Heat Pump. Zone cooling/heating capability may be provided by a zonal hydronic heat pump connected to a central water heat source/heat rejection loop, shared by other zonal hydronic heat pumps.
- **System 7:** Single Fan/Dual Duct. A single fan blows supply air through the heating and cooling coils and into the hot and cold supply ducts, with either a constant or variable volume fan. Zone terminal units mix hot and cold supply air streams to meet zone loads.
- **System 8:** Dual Fan/Dual Duct. Two separate central fan systems, one for heating and one for cooling, using either constant or variable fans, distribute air to the building. Zone terminal units mix hot and cold supply air streams to meet zone loads. If this system is included, the ~~ACM~~compliance software shall also simulate heating supply air reset, described below.
- **System 9:** Direct and Indirect Evaporative Cooling. Evaporative cooling may be modeled as the only cooling system or as a precooler for another cooling

system. The systems may utilize direct evaporative cooling only; indirect evaporative cooling only; indirect/direct evaporative cooling; or evaporatively precooled condensers. Direct or indirect evaporative precooling of supply air may also be modeled but no tests or specifications are defined for these options. Users shall be able to specify evaporative cooler fan capacity and brake horsepower (bhp), water pump capacity and brake horsepower (bhp), and whether or not the evaporative cooler can operates in conjunction with another cooling system. When evaporative cooling systems are modeled, default measures of direct and indirect (where applicable) cooling efficiencies shall be supplied. Subject to Commission approval, the user may be allowed to override these defaults.

- **System 10:** Underfloor Air Distribution Systems (UFAD). A central system provides air (typically 60°F to 68°F) to an underfloor plenum. It is distributed to the space using either passive or active grilles (cooling), across reheat coils or through fan-powered boxes (typically variable speed with reheat coils). Although this system uses warmer supply air temperatures it usually has a similar airflow to a conventional overhead system as it provides displacement of some of the thermal loads. The modeling software shall make accommodations for the user to specify the following system features: assignment of a percentage of the lighting, miscellaneous equipment and occupant loads to the return air plenum; application of variable speed fan powered boxes with a minimum airflow setting; application of a demand based pressure reset of the airflow; application of supply temperature reset by either demand or outdoor dry-bulb temperature; and assignment of low system static pressures.
- **System 11:** Single Zone Variable Air Volume Systems.

  Minimum turn down for airflow shall be no lower than that certified by the manufacturer as required to protect the cooling coil from freezing.

Perimeter Systems. Independent HVAC systems (typically heating only) which serve perimeter zones in addition to a primary system (typically cooling only). Perimeter systems differ from zone terminal systems in that they are independent: They do not connect to the primary system but supply heating/cooling through separate air outlets or heat transfer surfaces. There are two common types of perimeter systems.

- **System 12:** Convective/radiant. Zone perimeter system may be a convective or radiant system, such as baseboard or radiant ceiling panels.
- **System 13:** Constant volume system. Zone perimeter system provides heating/cooling by constant air volume supply to each zone served. System may or may not have outside air supply capability.

Perimeter systems may incorporate the following features (NOTE that perimeter systems may be specified as serving the same zone(s) as any of Systems 1 through 10):

- *Master zone.* Used when the perimeter system heating/cooling supply is controlled to satisfy the thermostat of a given zone.
- *Multiple zones.* Used when the perimeter system serves more than one zone of the primary system. (This allows modeling of "fighting" between the primary and perimeter system.)
- *Electric.* Used when the perimeter system heating is electric resistance.
- *Hydronic.* Used when the perimeter system cooling/heating coil is served by a central hydronic system.

	• DX. Used when the perimeter system cooling is provided by direct expansion refrigerant coils served by a heat pump or other compression system (see PLANT equipment.)
DOE Keyword:	SYSTEM-TYPE
Input Type:	Required
Tradeoffs:	Yes
Modeling Rules for Proposed Design:	Optional proposed systems shall be modeled as input by the user, according to the plans and specifications for the building, subject to all of the restrictions specified in the Required Systems and Plant Capabilities.
Modeling Rules for Standard Design (New):	Standard system types and applicable system parameters are chosen according to Chapter 2 Table N2-10. The air flow and supply air temperature for the standard design will be optimally controlled in the reference method. All efficiency descriptors shall be determined according to the requirements of the Required Systems and Plant Capabilities.
Modeling Rules for Standard Design (Existing Unchanged & Altered Existing):	~~ACM~~Compliance ~~s~~software shall model the existing system as it occurs in the existing building using DOE-2 default performance curves. If the permit involves alterations, ~~ACM~~compliance ~~s~~software shall model the system before alterations.

3.3.6 Combined Hydronic Systems

3.3.6.1 Nonresidential Buildings

Combined hydronic water heating systems for nonresidential buildings may be modeled as an optional capability. Vendor-proposed prescribed assumptions for this method are crucial. All user-defined inputs shall be enforceable. Variables which are difficult to plan and field verify should be incorporated as prescribed inputs. The residential water heating calculation methodology is a useful example for compliance-based combined hydronic heating system modeling.

3.3.6.2 High-Rise Residential Buildings

Combined hydronic water heating systems evaluation for high-rise residential buildings should be evaluated in a manner consistent with the low-rise residential combined hydronic system methodology. A vendor-proposed optional capability should incorporate the majority of efficiency measures evaluated by the low-rise residential method and should be reasonably consistent with those procedures, especially near the transition between low-rise and high-rise buildings. Inputs and analysis of wood stoves and wood-fired boiler are not required (in fact discouraged) to be included as part of the optional capability.

3.3.7 Alternate Equipment Performance Data

Description

~~ACM~~Compliance ~~s~~software may model equipment according to factory supplied performance data. The following performance relationships may be modeled:

All Packaged Cooling Equipment

See Chapter 2.

Packaged VAV Cooling Equipment Only

- Capacity as a function of supply air quantity
- Cooling electrical efficiency as a function of supply air quantity
- Sensible cooling capacity as a function of supply air quantity

Water Chillers

- Capacity as a function of exiting chilled water and entering condenser water temperatures
- Cooling electrical efficiency as a function of exiting chilled water and entering condenser temperatures

Furnaces

- Fossil fuel furnace efficiency

Heat Pumps

- See Chapter 2.

Boilers

- Fossil fuel boiler efficiency

DOE Keyword:	COOLING-EIR HEATING-HIR FURNACE-HIR HW-BOILER-HIR BOILER-EIR BOILER-HIR
Input Type:	Required
Tradeoffs:	Yes
Modeling Rules for Proposed Design:	~~ACM~~Compliance ~~s~~software shall model performance of proposed systems and plant equipment, except for fans, using DOE-2 default performance curves for the equipment specified in the construction documents for the building.
Low Value:	Minimum efficiency requirement
Modeling Rules for Standard Design (New):	~~ACM~~Compliance ~~s~~software shall model performance of all systems and plant equipment, except for fans, according to requirements of the Required Systems and Plant Capabilities, and the default performance curves listed in the DOE 2.1E supplement.
Modeling Rules for Standard Design (Existing Unchanged & Altered Existing):	~~ACM~~Compliance ~~s~~software shall model the existing system as it occurs in the existing building using the system's actual efficiencies according to requirements of the Required Systems and Plant Capabilities and DOE-2 default performance curves. If the permit involves alterations, ~~ACM~~compliance ~~s~~software shall model the system before alterations.

3.3.8 Cooling Towers Types

Description: ~~ACM~~Compliance ~~s~~software may model several options for cooling tower operation which may be specified at the user's option. These options are described below:

- *Closed circuit.* Condenser water is cooled indirectly by a heat exchanger which is evaporatively cooled (fluid cooler). With this option, the ~~ACM~~compliance software shall account for spray pump energy. If the ~~ACM~~compliance software has this capability, it shall require the user to specify if the cooling tower uses an open or closed circuit.
- *Axial fan.* An axial fan provides ambient air flow across tower fill or closed tower heat exchanger.
- *Natural draft.* Ambient air flow across tower fill is natural draft (not mechanically

driven) as defined by user input tower dimensional data and draft factor.

- *Discharge dampers.* Tower (condenser) capacity is controlled by modulating fan discharge dampers.
- *Bypass.* Tower leaving water temperature is controlled by bypassing tower return water around tower to the supply line, thereby cooling only a portion of the water flow.
- *Variable speed drive.* Tower (condenser) capacity is controlled by varying fan motor speed.

DOE Keyword:	TWR-CAP-CTRL TWR-MIN-FAN-SPEED FLUID-BYPASS
Input Type:	Required
Tradeoffs:	Yes
Modeling Rules for Proposed Design:	The ~~ACM~~compliance software shall model all optional cooling tower features as input by the user according to the construction documents for the building.
Modeling Rules for Standard Design (New):	The ~~ACM~~compliance software shall model the standard design according to the requirements of the Required Systems and Plant Capabilities.
Modeling Rules for Standard Design (Existing Unchanged & Altered Existing):	~~ACM~~Compliance ~~s~~software shall model the existing system as it occurs in the existing building using the system's actual efficiencies. If the permit involves alterations, ~~ACM~~compliance ~~s~~software shall model the system before alterations.

3.3.9 Pump Controls

Description: ~~ACM~~Compliance ~~s~~software may model several optional pump design, operation and control strategies which may be specified at the user's option. These options are described below:

- *Variable flow.* Used when the variable flow, constant temperature system flow rate varies as a function of load.
- *Riding curve.* Pump(s) ride characteristic performance curve as a function of head pressure. Head pressure will vary depending on the water demands of cooling and heating coils and the amount of water bypassing different zones.
- *Two-speed/stages.* Used when the pumps are staged, or pump has two-speed motor, to maintain pressure requirements. Pump(s) ride characteristic curve between stages.

DOE Keyword:	TWR-PUMP-HEAD TWR-IMPELLER-EFF TWR-MOTOR-EFF CIRC-IMPELLER-EFF CIRC-MOTOR-EFF CIRC-HEAD CIRC-PUMP-TYPE DHW-PUMP-ELE
Input Type:	Required
Tradeoffs:	Yes

Modeling Rules for Proposed Design:	~~ACM~~Compliance ~~s~~software shall model optional features of proposed design pumping systems as input by the user according to plans and specifications for the building.
Modeling Rules for Standard Design (New):	The ~~ACM~~compliance software shall model the standard design according to the requirements of the Required Systems and Plant Capabilities.
Modeling Rules for Standard Design (Existing Unchanged & Altered Existing):	~~ACM~~Compliance ~~s~~software shall model the existing system as it occurs in the existing building. If the permit involves alterations, ~~ACM~~compliance ~~s~~software shall model the system before alterations.

3.3.10 Air Foil Centrifugal Fan with Discharge Dampers

Description: The ~~ACM~~compliance software may model the following optional types of fan volume control, as input by the user. Default fan curves are given in terms of DOE-2 curve-fit instructions.

Air foil centrifugal fan with discharge dampers (ride fan curve). Fan volume is controlled by a controllable damper mounted at the fan discharge, or the fan "rides" its characteristic fan curve against varying system pressure.

```
AF-FAN-W/DAMPERS = CURVE-FIT
TYPE = QUADRATIC
OUTPUT-MIN = 0.68
DATA = (1.0,1.0)
       (0.9,0.95)
       (0.8,0.90)
       (0.7,0.86)
       (0.6,0.79)
       (0.5,0.71)
```

Vane-axial fan with variable pitched blades. Fan volume is controlled by varying blade pitch.

```
VANE-AXIAL-FAN = CURVE-FIT
TYPE = QUADRATIC
OUTPUT-MIN = 0.15
DATA = (1.0,1.0)
       (0.9,0.78)
       (0.8,0.60)
       (0.7,0.48)
       (0.6,0.36)
       (0.5,0.27)
       (0.4,0.20)
       (0.3,0.23)
       (0.2,0.22)
```

DOE Keyword:	FAN-CONTROL
Input Type:	Prescribed
Tradeoffs:	Neutral
Modeling Rules for Proposed Design:	The ~~ACM~~compliance software shall model supply and return fans chosen by the user and as documented on the plans and specifications for the building for the proposed design fan system. The ~~ACM~~compliance software shall use the performance data given in this manual.

Modeling Rules for Standard Design (New):	The ~~ACM~~compliance software shall model the standard design according to the requirements of the Required Systems and Plant Capabilities.
Modeling Rules for Standard Design (Existing Unchanged & Altered Existing):	~~ACM~~Compliance ~~s~~software shall model the existing system as it occurs in the existing building. If the permit involves alterations, ~~ACM~~compliance ~~s~~software shall model the system before alterations.

3.3.11 Separate Control for Supply, Return and Relief Fans

Description:	~~ACM~~Compliance ~~s~~software may model different fan volume control strategies for supply, return and relief fans. If the ~~ACM~~compliance software has this capability the user may specify a different strategy for each fan in the fan system.
DOE Keyword:	FAN-CONTROL
Input Type:	Required
Tradeoffs:	Yes
Modeling Rules for Proposed Design:	The ~~ACM~~compliance software shall model fan volume controls for each proposed design fan as input by the user. If different fan volume controls are not input for supply, return and/or relief fans, the ~~ACM~~compliance software shall assume all fan volume controls for the entire fan system to be the same as that specified for the supply fan.
Modeling Rules for Standard Design (New):	The ~~ACM~~compliance software shall model the standard design according to the requirements of the Required Systems and Plant Capabilities.
Modeling Rules for Standard Design (Existing Unchanged & Altered Existing):	~~ACM~~Compliance ~~s~~software shall model the existing system as it occurs in the existing building. If the permit involves alterations, ~~ACM~~compliance ~~s~~software shall model the system before alterations.

3.3.12 Air Economizers Control Strategies

Description: The ~~ACM~~compliance software may model the following optional economizer control strategies when specified by the user:

- *Outside air enthalpy.* Economizer cooling is enabled as long as the outside air enthalpy is less than 29 Btu/lb.
- *Variable enthalpy.* Equivalent to the Honeywell W7400 or H205 humidity biased enthalpy control using set-curve A.
- *Differential dry-bulb.* Economizer cooling is enabled as long as the return air temperature is greater than the outside air temperature.
- *Differential enthalpy.* Economizer cooling is enabled as long as the return air enthalpy is greater than the outside air enthalpy.
- *Economizer High Limit.* When a differential controller is used, a high limit, above which the economizer cannot operate, may also be added. The high limit controller can either be a dry-bulb (set at 75 degrees), an enthalpy (set at 29 Btu/lb) or a variable enthalpy controller.
- *Non-integrated, two stage operation.* The economizer operates as the first stage of cooling until the cooling load cannot be met by the economizer. At this point, the economizer closes to the minimum position and mechanical cooling is

used to meet the cooling load. If this strategy is selected, an outdoor high limit of 70 ODB or 28.5 Btu/lb shall be used.

DOE Keyword:	OA-CONTROL ECONO-LIMIT-T ECONO-LOCKOUT ENTHALPY-LIMIT DRYBULB-LIMIT
Input Type:	Default
Tradeoffs:	Yes
Modeling Rules for Proposed Design:	~~ACM~~Compliance ~~s~~software shall limit proposed design optional economizer control strategies to those listed in this section, including set points.
Default:	No economizer
Modeling Rules for Standard Design (New):	The ~~ACM~~compliance software shall model the standard design according to the requirements of the Required Systems and Plant Capabilities.
Modeling Rules for Standard Design (Existing Unchanged & Altered Existing):	~~ACM~~Compliance ~~s~~software shall model the existing system as it occurs in the existing building. If the permit involves alterations, ~~ACM~~compliance ~~s~~software shall model the system before alterations.

3.3.13 Water Side Economizers

Description

~~ACM~~Compliance ~~s~~software may model the following water side economizers when specified by the user:

- *Strainer cycle.* Used when cooling tower water is diverted to the main cooling coil for "free cooling" when the cooling tower leaving water temperature is low enough to meet the total building load. This type of water side economizer can only be used in place of, and cannot be used to supplement, mechanical cooling.
- *Series coil.* A cooling coil, connected to the condenser water loop ahead of the condenser, is placed in the air handler upstream of the main cooling coil. This coil is used to supplement mechanical cooling, when the cooling benefit is greater than the added pumping energy needed to circulate cooling tower water through the cooling coil.
- *Evaporator precooling (heat exchanger).* A heat exchanger is used to transfer heat from condenser water, prior to entering the condenser, and chilled water, prior to entering the evaporator, in order to precool the chilled water. If the difference between the return chilled water temperature and cooling tower leaving water temperature is large enough to provide a cooling benefit, the heat exchanger is used to supplement mechanical cooling.
- *Evaporator precooling (cooling tower).* Chilled water is circulated through a closed loop in the cooling tower before entering the evaporator. If the difference between the chilled water return temperature and outside wet-bulb temperature is large enough to provide a cooling benefit, chilled water is circulated to the cooling tower to supplement mechanical cooling.

DOE Keyword:	WS-ECONO WS-ECONO-MIN-DT WS-ECONO-XEFF

	CONDENSER-TYPE FLUID-VOLUME COND-FLOW-TYPE COND-WTR-FLOW
Input Type:	Default
Tradeoffs:	Yes
Modeling Rules for Proposed Design:	The ~~ACM~~compliance software shall model the proposed system water side economizer as input by the user, according to the plans and specifications for the building. If a strainer cycle is specified, changeover temperature from economizer to mechanical cooling shall be set at 50°F.
Default:	No economizer
Modeling Rules for Standard Design (New):	The ~~ACM~~compliance software shall model the standard design according to the requirements of the Required Systems and Plant Capabilities.
Modeling Rules for Standard Design (Existing Unchanged & Altered Existing):	~~ACM~~Compliance ~~s~~software shall model the existing system as it occurs in the existing building. If the permit involves alterations, ~~ACM~~compliance ~~s~~software shall model the system before alterations.

3.3.14 Zone Terminal Controls

Description: ~~ACM~~Compliance ~~s~~software may model the following optional features for zone terminal controls, as input by the user:

- *Constant volume.* Zone receives a constant volume of air regardless of thermostat signal.
- *Mixing hot deck/cold deck.* Zone temperature is controlled by mixing hot and cold air.
- *Induction.* Supply air induces room or return plenum air into the supply air stream.
- *Fan powered induction.* Zonal fan supplies return or room air optionally mixed with system supply air (if any).
- *Series.* Fan powered induction system where zonal fan is in series with primary system supply air. Fan runs continuously when central system is on providing constant volume to space.
- *Parallel.* Fan powered induction system where zonal fan is in parallel with primary system supply air. Primary supply is usually VAV. Fan cycles on only when heating is required.
- *Series/Parallel.* Fan powered induction system where zonal fan is in parallel with primary system supply air. Primary supply is usually VAV. Fan cycles on to maintain a minimum supply volume and when heating is required.

DOE Keyword:	TERMINAL-TYPE
Input Type:	Required
Tradeoffs:	Yes
Modeling Rules for Proposed Design:	The ~~ACM~~compliance software shall model optional zone terminal control features as input by the user according to the plans and specifications for the building. If the TERMINAL-TYPE is specified as SERIES-PIU (series fan-powered induction

system), the ~~ACM~~compliance software shall use the following fan power:

ZONE-FAN-KW = 0.000225

Modeling Rules for Standard Design (New):	The ~~ACM~~compliance software shall model the standard design according to the requirements of the Required Systems and Plant Capabilities.
Modeling Rules for Standard Design (Existing Unchanged & Altered Existing):	~~ACM~~Compliance ~~s~~software shall model the existing system as it occurs in the existing building. If the permit involves alterations, ~~ACM~~compliance ~~s~~software shall model the system before alterations.

3.3.15 Solar Thermal Energy

Description:	The depletable energy savings associated with solar collector systems shall be analyzed by the Commission. A nonresidential ~~ACM~~compliance software may be approved with the optional capabilities of built-in solar collector performance calculations. Vendors who wish to have their Nonresidential ~~ACM~~compliance ~~s~~software approved with either of these capabilities shall meet the requirements described in the Residential ACM ~~m~~Manual.
DOE Keyword:	N/A
Input Type:	Default
Tradeoffs:	Yes
Modeling Rules for Proposed Design:	~~ACM~~Compliance ~~s~~software may model solar water heating as an energy source for service hot water heating only.
Default:	No renewable energy is used.
Modeling Rules for Standard Design (New):	~~ACM~~Compliance ~~s~~software shall not model renewable energy sources for any of the standard design energy use.
Modeling Rules for Standard Design (Existing Unchanged & Altered Existing):	~~ACM~~Compliance ~~s~~software shall model the existing system as it occurs in the existing building. If the permit involves alterations, ~~ACM~~compliance ~~s~~software shall model the system before alterations.

3.3.16 Multiple Hydronic Circulation Loops14

Description:	The reference computer program, DOE2.1E, is structurally designed to ~~Compliance Software~~ models a single circulation loop for each loop type (chilled water, heated water and condenser water). ~~A n~~Nonresidential Compliance Software may optionally model multiple circulation loops. If this is done, the Compliance Software must calculate a single design head for chilled water loops, hot water loops and condenser water (cooling tower) loops for the proposed design. This design head is a flow-weighted average head that is used in the calculation of pump energy according to procedures in Section 2.5.3.13. For compliance software using the DOE2.1E computer program as the computational simulation engine where the proposed design has hydronic chillers and one or more cooling towers, a primary-secondary loop system may be modeled for the chiller by combing the condenser and primary pumps by determining the combined total flow of the condenser water pump and the primary chilled water pump into the COMP-TO-TWR-WTR DOE2.1E entry and using the flow-weighted average head for TWR-PUMP-HEAD entry. The

standard design must be modeled in the same way.

DOE Keyword: CCIRC-HEAD

HCIRC-HEAD

TWR-PUMP-HEAD

Input Type: Required

Tradeoffs: Neutral

Modeling Rules for Proposed Design: Compliance software may model multiple distribution loops for chilled water, hot water and condenser water systems (cooling towers). The total design head of the proposed design shall be determined according to the following equation:

$$\Delta H_{avg} = \frac{\sum_{i}^{nP}(GPM_i \times \Delta H_i)}{\sum_{i}^{nP} GPM_i}$$

Where i is an index indicating each unique chilled water pump, hot water circulation pump or condenser water circulation pump,

GPM_i is the volumetric flow rate of the pump

ΔH_i is the system head of the proposed design pump, in feet of water

ΔH_{avg} is the proposed design total system head for chilled water, hot water or condenser water. The proposed design total system head shall be subject to the limits as specified in Section 2.5.3.13.

Default: A single circulation loop for chilled water, hot water and condenser water is modeled according to Section 2.5.3.13.

Modeling Rules for Standard Design (New): Compliance software shall model the standard design as indicated in Section 2.5.3.13.

Modeling Rules for Standard Design (Existing Unchanged & Altered Existing): Compliance software shall model the existing system as it occurs in the existing building. If the permit involves alterations, Compliance Software shall model the system before alterations.

3.3.17 Underfloor Air Distribution (UFAD) Systems15

Description: A central system provides air (typically 60°F to 65°F) to an underfloor plenum. It is distributed to the space using either passive or active floor diffusers (cooling). The interior systems usually differ from the perimeter ones due to heating and architectural concerns in the perimeter zones. Overall, typical systems fall into two broad categories plus additional options, representing current practice:

1. **Type 1 UFAD:** Interior swirl (passive) diffusers plus perimeter fan coil units (FCU) with variable speed drive (VSD) – This system is configured with swirl diffusers in the interior spaces where the airflow is modulated by varying the pressure in the supply plenum in response to interior thermostats, and variable speed fan coil units in the perimeter typically supplying linear bar grille diffusers.

2. **Type 2 UFAD:** VAV diffusers throughout – This system consists of controlled damper/diffusers in both interior and perimeter zones. The supply plenum pressure is held constant. A constant speed fan coil unit is used for

heating only, typically in the perimeter.

3. Other options – Variations on these two system types include: alternative heating at perimeter (e.g., baseboards), constant volume interior, alternative configuration of diffusers (e.g., swirl at perimeter vs. linear bar grille), air source for series FCU (supply plenum vs. room), pressure and supply air temperature reset strategies.

Although a UFAD system generally uses warmer supply air temperatures, its airflow depends on the level of stratification in the room, and the magnitude of heat transfer to the underfloor supply plenum. The primary areas where the use of UFAD may impact building energy use are fan and cooling energy. Fan energy impacts are due to the effects of supply temperature, heat transfer to the plenum, and stratification. Cooling energy impacts are due to differences in how the economizer operates for different supply temperatures.

The Compliance Software shall semi-automatically include provisions to accurately simulate the following factors:

1. Heat transfer to the underfloor supply plenum and its effect on net room load and thus airflow requirements (see below)
2. Effect on airflow requirements due to room supply and return temperatures greater than conventional overhead systems.
3. Effect on AHU leaving temperature and thus economizer performance (and its impact on cooling energy use) of the combination of higher room supply temperatures and heat gain to the supply plenum.
4. Potentially lower central fan static pressure requirements
5. Effect on total building fan energy due to variable speed fan coils for cooling
6. Realistically simulate typical UFAD system types.

The Compliance Software shall use the following guidance to accurately simulate realistic energy performance of UFAD systems:

- Reduce zone load to simulate heat transfer to the supply plenum (for ACMs that do not explicitly model supply plenums) – zone heat gain is reduced by applying a Room Cooling Load Ratio (RCLR) to the people, lighting and equipment loads. The Compliance Software shall use an RCLR of 0.6, meaning that 60 percent~~%~~ of the heat gain shall remain in the space and 40 percent~~%~~ shall be assumed to transfer into the underfloor supply plenum.
- Split the remaining space load determined above between room and return plenum to simulate room air stratification. The Compliance Software shall automatically assign the following factors to each of occupant, lighting and equipment heat gains: 85 percent~~%~~ to space and 15 percent~~%~~ to return plenum.
- The diffuser discharge temperature (i.e., supply to the zone) shall be assumed to be 65°F. The required supply air temperature from the air handler shall be calculated using the Room Cooling Load Ratio definition above.

The Compliance Software shall allow the use of a higher supply air temperature, as well as the application of supply temperature reset by either demand or outdoor dry-bulb temperature. Additionally, the Compliance Software may also optionally accommodate higher chilled water temperatures on systems that utilized chilled water coils.

The Compliance Software shall make an entry in the special features and remarks

	section of the PERF-1 report noting the use of an underfloor air distribution system.
DOE Keyword:	LIGHTING-W/SQFT EQUIPMENT-W/SQFT AREA/PERSON MIN-SUPPLY-T CHILL-WTR-T AHU SAT Economizer type PIU W/CFM AHU design static pressure
Input Type:	Default
Tradeoffs:	Yes
Modeling Rules for Proposed Design:	The Compliance Software shall model all optional underfloor air distribution system features as input by the user according to the construction documents for the building. Additional supporting calculations can be included to assist the user in determining appropriate input.
Default:	n/a
Modeling Rules for Standard Design (New):	The Compliance Software shall model the standard design according to the requirements of the Required Systems and Plant Capabilities.
Modeling Rules for Standard Design (Existing Unchanged & Altered Existing):	Compliance Software shall model the existing system as it occurs in the existing building. If the permit involves alterations, Compliance Software shall model the system before alterations.

3.3.18 Thermal Energy Storage (TES) Systems16

This system consists of a thermal energy storage component used in conjunction with a conventional chilled water air conditioning system. Since it is possible for the user to specify a TES system that has insufficient capacity to meet the load, the Compliance Software~~ACM~~ shall ensure that the cooling load is met. This shall be accomplished by switching to compressor direct efficiency.

Description:	The TDV energy savings associated with storing cooling energy during off-peak periods for use during high demand periods may be modeled by the Compliance Software. The Compliance Software shall simulate the TES system according to the following rules, criteria, inputs, and outputs: The system includes a storage tank for storing cooling energy on-site. The storage of cooling energy (charging) is accomplished though an active mechanism such as the pumping of chilled water and not a passive mechanism such as the storage of energy through the thermal mass of the building. Charging is accomplished through an onsite chilled medium such as water or a eutectic solution but not by a direct expansion cooling system. The system includes automatic controls that allow energy storage to occur during off-peak hours. The system (TES-TYPE) is one of the following: Chilled Water Storage

Ice-on-Coil

Ice Harvester

Brine

Ice-Slurry

Eutectic Salt

CHS

DOE Keyword: TES-TYPE

SIZE

COOL-STORE-RATE

COOL-SUPPLY-RATE

COOL-STORE-SCH

CTANK-BASE-T

CTANK-T-RANGE

CTANK-LOSS-COEF

COMP-KW/TON-START

COMP-KW/TON-END

EVAP-DELTA-T

REFRIG-T-AT-PC

PER-COMP-REDUCT/F

PUMP+AUX-KW

EVAP-DELTA-T - The evaporator delta T (EVAP-DELTA-T) shall specify the drop in refrigerant temperature as the system begins to charge. Values shall be set by the compliance software~~ACM~~ as follows: Chilled Water - n/a, Ice-on-Coil Systems – 4 º F, Ice Harvester 4 º F, Brine (Encapsulated Ice) – 4 º F, Ice Slurry - 4 º F, Eutectic Salt - 0 º F, CHS - n/a

The refrigerant temperature (REFRIG-T-AT-PC) shall specify the refrigerant temperature at the start of the storage phase change. Values shall be set by the compliance software~~ACM~~ as follows: Chilled Water - n/a, Ice-on-Coil Systems - 22 º F, Ice Harvester - 22 º F, Brine (Encapsulated Ice) - 22 º F, Ice Slurry - 22 º F, Eutectic Salt - 41 º F, CHS - n/a

For TES systems that use ice as storage medium, additional parameters shall specify the efficiency of the chiller when it begins the charging process to make ice (COMP-KW/TON-START) and the efficiency of the chiller at the end of the charging process when ice making is complete (COMP-KW/TON-END). In addition, the reduction in chiller capacity that occurs as the temperature of the refrigerant is reduced during the ice making process (PER-COMP-REDUCT/F) shall be specified.

The thermal energy storage tank shall be simulated through the following additional compliance software ~~ACM~~ inputs:

Storage capacity (SIZE) shall specify the total storage capacity of the system.

Storage rate (COOL-STORE-RATE) shall specify the maximum rate at which the chiller can add cooling into the storage tank.

Discharge rate (COOL-SUPPLY-RATE) shall specify the maximum rate at which cooling energy can be extracted from the storage tank.

Base temperature (CTANK-BASE-T) shall specify the highest temperature of the storage medium delivered. This shall be fixed at 50 º F.

Temperature range (CTANK-T-RANGE) shall specify the temperature difference between the Base temperature and the coldest storage temperature of the system. Values shall be set by the ~~ACM~~compliance software as follows: Chilled Water - 10 º F, Ice-on-Coil Systems - 18 º F, Ice Harvester - 18 º F, Brine (Encapsulated Ice) - 18 º F, Ice Slurry - 18 º F, Eutectic Salt - 6 º F, CHS - 6 º F

Storage tank heat loss coefficient (CTANK-LOSS-COEF) shall specify the product of the U-Value and area of the storage tank for determining the heat transfer loss between the storage tank and ambient conditions.

The compliance software shall use a non-varying charging and discharging schedule for all TES systems (COOL-STORE-SCH). Charging will occur starting at 9:00 p.m. and ending at 9:00 a.m. Discharging will begin at noon and end at 6:00 p.m. The cooling load between 6:00 p.m. and 9:00 p.m. is met by the TES system (when the stored energy is available) or by the compressor (when the stored energy is not available). Between 9 a.m. and noon the tank does not discharge, and the cooling load is met by the compressor only.

Auxiliary energy use (PUMP+AUX-KW) shall specify any pumping or energy usage from devices such as air blowers used in the TES system.

Special requirements for compliance software developers:

The PERF-1, Special Features and Modeling section must have a note to alert the building department to inspect the TES system using the MECH-2-C (TES) form.

The PERF-1 must alert the building department to the need for a Certificate of Acceptance for TES systems, MECH-15A~~9-A~~.

Input Type:	Required
Tradeoffs:	Yes
Modeling Rules for Proposed Design:	Compliance software shall model features of TES systems as input by the user according to plans and specifications for the building.
Modeling Rules for Standard Design:	Compliance software shall model the system without TES systems according to the required systems and plant capabilities and selection rules in Chapter 2 Table N2-10.
Modeling Rules for Standard Design (Existing, Unchanged, and Alterations):	Compliance software shall model the existing system as it occurs in the existing building. If the permit involves alterations, Compliance Software shall model the system before alterations.

3.3.19 Distributed Energy Storage DX AC System (DES/DXAC)

This system uses thermal energy storage in conjunction with a conventional direct-expansion (DX) air conditioning system. The condenser coil and outdoor fan and evaporator coil and indoor fan are the same as that used on a conventional DX system (such as a split system or packaged rooftop unit). This system is similar to the thermal energy storage component used above, but uses refrigerant to directly charge the thermal storage.

The reference compliance software does not have the capability to model DES/DXAC systems directly; however, the Compliance Software can use a DOE-2 function that has been developed to model this system type.

Description: ~~ACMs~~ Compliance software may model DES/DXAC systems using the DOE-2 function listed in Nonresidential ACM Appendix E~~F~~ for the following proposed system types:

1. PSZ: Packaged Single Zone System
2. PVAVS: Packaged Variable Air Volume System
3. PMZS: Packaged Multi-Zone System
4. PVVT: Packaged Variable Volume Variable Temperature System

DOE Keyword: FUNCTION = (*NONE*, *ISACFunc*). This keyword should be inserted right after the SYSTEM-TYPE keyword for each system that uses DES/DXAC. This keyword basically means the ISACFunc routine which calculates the cooling energy use of a DES/DXAC system will be called after DOE-2 completes calculation for a system.

Input Type: Required

Tradeoffs: Yes

DES/DXAC DOE-2 Function: The ISAC DOE-2 function written in FORTRAN code is listed in Appendix A. The ISAC function should be inserted between the system "END .." line and the "COMPUTE SYSTEMS .." line. This can also be done by inserting an include statement "~~#~~#INCLUDE ISAC.func", and put the actual DOE-2 function file ISAC.func at the DOE-2 executable files folder.

Modeling Rules for Proposed Design:

Optional proposed systems shall be modeled as input by the user, according to the plans and specifications for the building, subject to all of the restrictions specified in the Required Systems and Plant Capabilities. User inputs for a DES/DXAC system include –

1. Change Condenser Type to DES/DXAC from Air-Cooled for the four packaged system types
2. Specify cooling capacity and efficiency of the system based on performance data and modeling rules defined in Appendix E.

The makeup system cooling efficiency will be based on Title 24-2008~~2005~~ rules. There is no credit or penalty for the makeup system compared with the Standard Design.

Modeling Rules for Standard Design (New):
Standard system types and applicable system parameters are chosen according to Chapter2 Table N2-10. The air flow and supply air temperature for the standard design will be optimally controlled in the reference method. All efficiency descriptors shall be determined according to the requirements of the Required Systems and Plant Capabilities.

Modeling Rules for Standard Design (Existing Unchanged & Altered Existing):
Compliance software ~~ACMs~~ shall model the existing system as it occurs in the existing building using DOE-2 default performance curves. If the permit involves alterations, compliance software ~~ACMs~~ shall model the system before alterations.

3.4 Vendor Defined Optional Capabilities

Vendors may propose other optional capabilities not specifically described in this manual. In the proposal for vendor specified optional capabilities, the vendor shall include:

- Theoretical background and simulation algorithms
- Testing data and validation analysis for all specified capabilities
- Standard and proposed design assumptions
- Specific documentation requirements, addressing enforceability by building department personnel

4. User's Manual and Help System Requirements

Each ~~ACM~~compliance software vendor is required to publish a compliance supplement or an independent user's manual which explains how to use the ~~ACM~~compliance software for compliance with the Standards. The manual may also exist in electronic form, either on the user's workstation or web enabled. The document shall deal with compliance procedures and user inputs to the ~~ACM~~compliance software. Both the ~~ACM~~Compliance Software and the User's Manual and Help System shall positively contribute to the user's ability and desire to comply with the Standards and to the enforcement agency's ease of verifying compliance. The ~~ACM~~Compliance Software User's Manual and Help System should minimize or reduce confusion and clarify compliance applications. The Commission may reject an ~~ACM~~compliance software whose ~~ACM~~Compliance Software User's Manual and Help System does not serve or meet these objectives.

4.1 Overview

The ~~ACM~~Compliance Software User's Manual and Help System shall:

- Describe the specific procedures for using the ~~ACM~~compliance software for compliance with the Standards.
- Provide instructions for preparing the building input, using the correct inputs, and using each of the approved optional capabilities (or exceptional methods) for which the ~~ACM~~compliance software is approved.
- Explain how to generate the standard compliance reports and related compliance documentation. A sample of properly prepared compliance documentation shall be included as part of the manual or help system.

The ~~ACM~~Compliance Software User's Manual and Help System serve two major purposes:

- It helps building permit applicants and others use the ~~ACM~~compliance software correctly, and guides them in preparing complete compliance documentation to accompany building permit applications.
- It helps ~~building department~~enforcement agency staff plan check permit applications for compliance with the Standards.

The ~~ACM~~Compliance Software User's Manual and Help System serves as a crucial performance method reference in resolving questions concerning specific ~~ACM~~compliance software program attributes, approved modeling capabilities and procedures in the context of both compliance and enforcement.

4.2 Modeling Guidelines and Input References

The ~~ACM~~Compliance Software User's Manual and Help System shall contain a chapter or section on how to model buildings for compliance and how to prepare a building input file for a compliance run. The following are examples of topics to include:

- What surfaces to model (exterior, interior floors, etc.);
- How to enter data about these surfaces;
- How to model exterior shading (fins, overhangs, etc.);
- Appropriate zoning for compliance modeling;
- Selection of correct occupancy types;
- How to model similar systems;
- How to model buildings or portions of a building with no heating or cooling;

- Requirements for written justification and additional documentation on the plans and in the specifications for exceptional items;
- Program modeling limitations; and
- The *Nonresidential Manual* as required reading.

All program capabilities should be described in sufficient detail to eliminate possible confusion as to their appropriate use. While references to the ~~ACM~~compliance software's regular users manual are acceptable, a complete listing of all inputs and/or commands necessary for compliance should be included in the ~~ACM~~Compliance Software User's Manual and Help System.

4.3 Required Modeling Capabilities

4.3.1 General Requirements

4.3.1.1 Format

The ~~ACM~~Compliance Software User's Manual and Help System shall be written in a clear and concise manner. The suggested format is:

- An introduction or overview explaining the use of the ~~ACM~~compliance software for compliance with the Standards.
- A chapter or section which covers every input that can be used for compliance analysis.
- A chapter or section which covers each standard output report.
- Appendices, as needed, to provide any additional background information that are not crucial in explaining the basic functioning of the program for compliance. For example:
  - An appendix may contain variations of compliance forms as described above.
  - An appendix may include a series of construction assembly (ENV-3) forms to aid the ~~ACM~~compliance software user.
  - An appendix may reprint important sections of the *Nonresidential Compliance Manual* or this manual that are crucial to modeling buildings correctly for compliance with the ~~ACM~~compliance software.

Although the organizational format is not fixed, all information contained in the ~~ACM~~Compliance Software User's Manual and Help System shall be easy to find through use of a table of contents, an Index, or through a context sensitive help system.

4.3.1.2 Modeling Guidelines

The ~~ACM~~Compliance Software User's Manual and Help System shall contain clear and detailed information on how to use the ~~ACM~~compliance software to model buildings for compliance with the Standards. Include the following:

1. Description of the value or values associated with each of input.
2. Restrictions on each variable.
3. Listing of the range beyond which inputs are unreasonable for any variable.
4. Description of options for any user-defined variable.

4.3.1.3 Statement

The following statement shall appear, in a box, within the first several pages of the ~~ACM~~Compliance Software User's Manual and Help System:

[Insert Name of Alternative Calculation Method] may be used to show compliance with California's Energy Efficiency Standards for Nonresidential Buildings only when the following reference documents are readily available to the program user:

1. 2008~~5~~ Building Energy Efficiency Standards (P400-03-001F)
2. Nonresidential Compliance Manual (P400-03-004F)

Both publications are available from www.energy.ca.gov/title24~~.org~~:

California Energy Commission
Publications Office
1516 Ninth Street, MS-13
P.O. Box 944295
Sacramento, CA 94244-2950
(916) 654-5200

4.3.1.4 Copies of ~~ACM~~Compliance Software User's Manual and Help System

~~ACM~~Compliance software vendors shall make a copy of the ~~ACM~~Compliance Software User's Manual and Help System available to any California ~~building department~~enforcement agency that requests it.

4.3.1.5 Commission Approval

Include a copy of the official Commission notice of the approval of the ~~ACM~~compliance software. The notice may include restrictions or limitations on the use of the ~~ACM~~compliance software. It will also include the date of approval, and may include an expiration date for approval as well. The notice will indicate optional capabilities for which the ~~ACM~~compliance software is approved and other restrictions on its use for compliance. The Commission will provide this notice upon completion of evaluation of the compliance software~~ACM~~ application.

4.3.2 Occupancies and Spaces

4.3.2.1 Conditioned Floor Area and Volume

Describe how the user determines and enters the conditioned floor area for each occupancy area and for the building as a whole.

- The conditioned floor area of all conditioned space (i.e., all directly or indirectly conditioned space) shall be included in the performance analysis. For a definition of conditioned space, see ~~Section~~§ 101(b)~~ of the Standards~~.
- All directly or indirectly conditioned volume shall be included in the analysis.
- State that the conditioned floor area for spaces within the building DO NOT include the area under permanent floor-to-ceiling height partitions, but that the conditioned floor area for the whole building includes the area under these partitions. This conforms with the Standards which define Conditioned Floor Area as the floor area (in square feet) of enclosed conditioned space on all floors of a building, as measured at the floor level of the exterior surfaces of exterior walls enclosing conditioned space.
- Note the following special cases:
    - For internal and enclosed spaces lighting power allotments for the Area Category Method are determined from floor areas:
    - Where areas are bounded or separated by interior partitions, the floor space occupied by those interior partitions shall not be included in any area.

4.3.2.2 Enclosed Unconditioned Spaces

Describe unconditioned spaces and that they are modeled using the same rules.

Explain that enclosed conditioned and unconditioned spaces shall be modeled if they are included in the permitted space and that modeling them is optional if they are not part of the permitted space.

If enclosed conditioned or unconditioned spaces are not modeled, the demising partition separating the conditioned space from the enclosed unconditioned space is modeled as an adiabatic partition (see Section 2.3.4.1).

4.3.2.3 Indirectly Conditioned Spaces

Explain that ~~ACM~~compliance software~~s~~ explicitly simulate all indirectly conditioned spaces, and that users may choose to simulate indirectly conditioned spaces as part of the directly conditioned space provided that the total volume and area of indirectly conditioned spaces included are each less than 15 percent~~%~~ of the total volume and area of the total indirectly and directly conditioned volume and area.

For the purpose of this manual, indirectly conditioned spaces are those that can either ~~can~~ be occupied or ~~cannot be~~ unoccupied.

The requirements for each of these three cases are documented below.

Indirectly Conditioned Spaces Included in Directly Conditioned Space	Describe how the user enters this space. The space shall use the same configuration and occupancy characteristics as occurs in the construction documents, including envelope performance, occupancy characteristics and lighting levels.
Indirectly Conditioned Spaces that can be occupied and Explicitly Modeled	The ~~ACM~~Compliance Software User's Manual and Help System shall describe how the user shall explicitly identify indirectly conditioned space which can be occupied.
Indirectly Conditioned Spaces that cannot be occupied and Explicitly Modeled	The ~~ACM~~Compliance Software User's Manual and Help System shall describe how the user shall explicitly identify indirectly conditioned space which cannot be occupied. The ~~ACM~~Compliance Software User's Manual and Help System shall instruct the user to specify the amount of light heat to be rejected to this space.

4.3.2.4 Internal Mass

Describe how users enter parameters to approximate the mass effects of all interior partitions and furniture~~. When~~ when the ~~ACM~~compliance software allows the user to enter information on ~~lightweight~~ internal mass,

Describe how to determine appropriate entries and restrictions on user entries for the spaces described below:

- *Directly Conditioned and Indirectly Conditioned Space Which Can be Occupied*: The reference method models ~~lightweight~~ internal mass through the use of "heavy" furniture weighing 80 pounds per square foot of floor area. In this method, there is an 85 percent~~%~~ chance that sunlight will fall upon furniture as opposed to the floor.
- *Indirectly Conditioned Spaces Which Cannot be Occupied*: For these spaces the reference method models ~~lightweight~~ internal mass by using a light furniture category of 30 pounds per square foot in DOE 2.1 to generate the lightweight standard weighting factors for these spaces.

4.3.2.5 Occupancy Types

Describe the use of each occupancy type in Table N2-5 ~~Table N2-2~~ for spaces or buildings when lighting plans are submitted for the entire building or when lighting compliance is not performed.

Include each area occupancy type from Table N2-6~~Table N2-3~~ for spaces when lighting plans are submitted for portions or for the entire building or when lighting compliance is not performed.

Require users to enter the occupancy(s) of each conditioned area or space being modeled. The user should select the occupancy that most closely matches the occupancy specified in Table N2-5~~2~~ or Table N2-6~~3~~. The

user's occupancy selection should be based on the actual occupancy of the space(s) not on the amount of lighting or other energy use aspects desired.

Guide the user on how to determine an occupancy based on occupancy use similarities and limit occupancy lighting information and other occupancy assumptions to references to this Manual or an appendix. By virtue of the categories "all other" and "tenant lease space" the occupancy tables are complete and address all possible occupancies. The local enforcement agency (not the ~~ACM~~compliance software user/permit applicant) has the discretion to determine if the user's occupancy choices are reasonable and correct.

If the ~~ACM~~compliance software has an independent occupancy selection for ventilation, describe how best to select a ventilation occupancy and may describe ventilation assumptions.

Note. The ~~ACMc~~Compliance ~~s~~Software User's Manual and Help System is not the forum to argue the validity of area occupancy assumptions, nor should the ~~ACM~~compliance software or the ~~ACM~~Compliance Software User's Manual and Help System be written so that either encourages debates about area occupancy assumptions or debates about choosing occupancies based on these assumptions. The Commission strongly encourages vendors to reference these assumptions by referring to Chapter 2 of this manual, but these assumptions may also be provided in an appendix to the ~~ACM~~Compliance Software User's Manual and Help System.

4.3.2.6 Mixed Occupancies

Explain how the user may select mixed as the occupancy type when selecting an area occupancy. Area occupancy types may only be mixed when they are all within the same zone, have the same operating schedules and when none of the occupancies includes process loads.

Describe how the user, if mixed is selected as the area occupancy type, enters the total area of the zone and the area and square footage of up to four different area occupancy types. Describe how the ~~ACM~~compliance software automatically calculates the sum of the areas for the four different occupancies:

- If the sum of the four different areas is greater than the input total area of the zone, the ~~ACM~~compliance software will abort or ask for corrected input.
- If the sum of the four different occupancies is less than the input total area of the zone, the ~~ACM~~compliance software will assign the occupancy "all other" to the additional area needed to equal the input total area.

Note that the areas specified do not include the area of interior partitions for the purposes of determining lighting wattages in accordance with the standards.

Explain that the ~~ACM~~compliance software will assign default assumptions for occupant densities, outside air ventilation rates, lighting loads, receptacle loads and service water heating loads by calculating the area weighted average for each of these inputs, using the areas input by the user.

Refer the user to sections for lighting, ventilation loads and process loads for respective requirements for each of these adjustments.

4.3.2.7 Occupant Loads

Explain that these values are automatically selected by the ~~ACM~~compliance software based on the occupancy.

4.3.2.8 Receptacle Loads

Explain that these values are automatically selected by the ~~ACM~~compliance software based on the occupancy type and that the receptacle loads include the process energy produced by equipment that are plugged into receptacle outlets such as personal computers and printers.

4.3.2.9 Process Energy

Explain that the process energy is limited to the energy produced by equipment whose locations are specified on the plans or other construction documents. The User's Manual and Help System shall clearly explain that the energy generated by plugged-in devices such as office equipment shall not be modeled as process energy.

The thermal energy from such devices ~~are~~ is included in the plug loads shown in Table N2-5 and Table N2-6 ~~Table N2-2 or N2-3~~.

4.3.2.10 Ventilation

Explain that the ventilation level is based on the selected occupancy(s) and cannot be altered by the user. The User's Manual and Help System shall explain that process ventilation may be input by the user for compliance simulations.

Inform the user that they shall justify the need for nonzero tailored ventilation values to the satisfaction of the local enforcement agency.

4.3.3 Walls, Roofs and Floors

4.3.3.1 Exterior Opaque Surfaces

Include the following information.

- Every exterior partition of the proposed building shall be modeled.
- The Standards define an exterior partition as: an opaque, translucent, or transparent solid barrier that separates conditioned space from ambient air or space that is not enclosed.
- Every slab-on-grade and underground wall~~s~~ and floor~~s~~ of the proposed building shall be modeled.
- Partitions separating the conditioned space from the courtyard are exterior partitions and shall be modeled as such by the ~~ACM~~compliance software.
- Demising partitions are defined in the Standards as: solid barriers that separate conditioned space from enclosed unconditioned space.

Demising partitions (usually walls) must either ~~may not~~ be modeled as shaded exterior partitions or as a partition that separates conditioned and unconditioned space. They are modeled as interior walls constructed according to the plans and specifications for the building. If the enclosed unconditioned space is not included in the permit, the demising partition shall be modeled as a shaded exterior wall unless it is a "party wall" separating tenant spaces. A "party wall" can be modeled as an adiabatic wall ~~partition~~ for both the standard and the proposed buildings if it has R-13 between framing members or has a U-factor of less than 0.213.

4.3.3.2 Interior Surfaces

The ~~ACM~~Compliance Software User's Manual and Help System shall include the following information.

- All interior floors shall be modeled.
- Enclosed a~~A~~tria are considered indirectly conditioned spaces and partitions separating the conditioned space from atria are interior surfaces.
- All interzone and interior walls shall be modeled as air walls with no heat capacity and U-factor of 1 Btu/h-ft^2-ºF. The ~~ACM~~compliance software automatically accounts for the heat capacity of all interzone and interior walls by modeling them as light mass.

4.3.3.3 Construction Assemblies

Explain how the user can select construction assemblies from ~~ACM~~ Reference Joint Appendix ~~IV~~JA4, which will account for thickness (ft), density (lb/ft³), specific heat (Btu/ºF-lb) and thermal conductivity (Btu-ft/h-ºF).

Note that the U-factor requirements for exterior partitions in the Standards include the fixed outside air film assumed in the Nonresidential Compliance Manual, but the reference method and other energy analysis computer programs extract this fixed outside air film value and recalculate the outside air film resistance on an hourly basis as a function of wind speed.

4.3.3.4 Absorptance and Emittance

Describe how the user enters the value for the absorptance and emittance (or related values such as reflectance or SRI) for roofs (default shall be used for other surfaces), and describe the relationship between absorptance and reflectance (absorptance = 1 – reflectance).

Explain that the ~~ACM~~compliance software user can specify roof surfaces between 0.95~~0~~ and 0.20 absorptance and between 0.95 and 0.10~~92~~~~20~~ emittance, and that the program will warn and print an exceptional condition on the Certificate of Compliance whenever the absorptance is less than 0.50.

Explain the default for when the user does not specify an absorptance.

4.3.3.5 Surface Orientation and Tilt

Describe how the user enters the surface orientation (azimuth) and tilt of each exterior partition.

4.3.3.6 Exterior Doors

Explain how the user selects door constructions from ~~ACM~~compliance software Joint Appendix JA4~~ IV~~ and enters the orientation, tilt, locations, and areas for exterior doors.

Explain that exterior doors may be grouped together as one area if they have the same (within the tolerance allowed for ~~ACM~~compliance software~~s~~) orientation, tilt, construction and materials.

4.3.3.7 Exterior Walls

Describe how the user selects wall constructions from ~~ACM~~compliance software Joint Appendix JA4~~ IV~~, which account for U-factor and heat capacity. It shall describe how to enter the information to determine the Exterior Wall Area as:

Equation N4-1 Gross Exterior Wall Area - (Vertical Fenestration Area + Door Area)

where the Vertical Fenestration Area is equal to or less than the value explained below.

4.3.3.8 Underground Walls

Describe the parameters that users shall enter to model underground walls.

Require users to separately identify exterior walls separating conditioned space from adjacent earth, and request users to separately select underground wall constructions from ~~ACM~~compliance software Joint Appendix ~~IV~~JA4.

4.3.3.9 Exterior Roofs/Ceilings

Describe how the user enters area, tilt and orientation of roof/ceiling constructions and selects a construction assembly from ~~ACM~~compliance software Joint Appendix JA4~~ IV~~.

Describe how the user enters the information to determine the Exterior Roof/Ceiling Area as:

Equation N4-2 Gross Exterior Roof Area~~/Ceiling Area~~ - Skylight Area

Describe how to enter each exterior roof assembly, including construction, orientation and tilt, location and area for all roofs as they occur in the construction documents. Exterior roofs that have the same construction assembly from ~~ACM~~compliance software Joint AppendixJA 4~~IV~~ and that are in the same occupancy and system areas and are exposed to the same outside conditions may be combined for the purposes of entering the area of the roof assembly.

4.3.3.10 Exterior Raised Floors

Describe how the user enters area and selects construction assemblies from ~~ACM~~compliance software Joint Appendix JA4~~ IV~~.

E~~e~~xplain how the user enters raised floor construction/assembly information to simulate raised floors accurately.

4.3.3.11 Concrete Slab Floors on Grade

Describe how the user selects slab constructions from ~~ACM~~compliance software Joint Appendix JA4~~IV~~.

Provide the user with the information on how to enter slab constructions and areas as they occur in the construction documents.

4.3.3.12 AUnderground Walls and Floors

Describe the parameters that users shall enter to model underground walls and floors.

Require users to separately identify floors separating conditioned space from adjacent earth, and request users to select separate constructions from ~~ACM~~compliance software Joint Appendix ~~IV~~4.

Require the user to enter underground floor constructions and areas as they occur in the construction documents.

4.3.4 Fenestration

4.3.4.1 Fenestration Products

Describe how the user enters information about the characteristics of fenestration products in both walls and roof~~/ceilings~~ that affect the energy use of the building. The features that shall be explained in the ~~ACM~~Compliance Software User's Manual and Help System are described in the following sections.

Describe the differences between the fenestration product categories: manufactured fenestration products, site-built fenestration products, and field-fabricated fenestration.

4.3.4.2 Fenestration Orientation and Tilt

Describe how the user enters the actual azimuth (direction) and surface tilt of glazing surfaces in each surface. The user shall be instructed that the azimuth and surface tilt of each glazing surface shall be entered as it occurs in the construction documents rounded off to the nearest whole degree.

4.3.4.3 Fenestration Thermal Properties

Describe that, for each fenestration product, the user shall input the fenestration's overall U-factor and SHGC.

Describe the allowed sources for the U-factor and SHGC, the fenestration labeling alternatives and the limitations on the use of the alternate default values as covered in ~~Section~~§ 116 of the Standards and ~~Section~~§ 10-111 of the Administrative Standards and Reference Nonresidential Appendix NA6.

Describe that default values are used when no entries are made.

Explain that the basis of the standards is the appropriate maximum U-factor and the Relative Solar Heat Gain or the Solar Heat Gain Coefficient from Tables 143-~~A~~ A,~~and~~ 143-B, and 143-C of the Standards according to occupancy and climate zone.

4.3.4.4 Glazing in Exterior Walls and Shading

Describe how to model heat transfer through all glazed (transparent or translucent) surfaces of the building envelope walls. The user shall account for many features of exterior glazing in walls. These features, including all standard and proposed modeling assumptions and inputs, are described in the following sections.

4.3.4.5 Area of Fenestration in Walls and Doors

Explain how the user shall model the exposed surface area of each transparent or translucent surface. Fenestration surfaces include openings in the walls and vertical doors of the building.

Describe how to enter the following:

- *Fenestration Area in Walls and Doors*. For each glazing surface, the user shall enter the area of glazing surface associated with a zone. This area is the rough-out opening for the window(s). The areas of fenestration in walls and doors shall only be grouped when they have the same U-factor, orientation, tilt, shading coefficient, relative solar heat gain and relationship to shading from exterior devices such as overhangs or side fins. Fenestration in demising walls may not be grouped with fenestration in exterior walls or doors.

  ~~The area of field-fabricated fenestration is limited to 1,000 ft^2 when a building has more than 10,000 ft^2 of total fenestration area; any building that exceeds this limit will not meet compliance.~~

- *Display Perimeter*. When the ~~ACM~~compliance software calculates the standard glazing/fenestration area based on the display perimeter, the ~~ACM~~Compliance Software User's Manual and Help System shall describe how the user enters parameters for display perimeter. The user shall specify a value, in feet, for each zone on each floor or story of the building that abuts a public sidewalk. The value is used as an alternate means of establishing Maximum Fenestration Area in the standard design (~~Title 24,~~ § 143). As defined in § 101(b) ~~of the Standards~~, display perimeter is the length of an exterior wall in a Group B; Group F, Division 1; or Group M occupancy that immediately abuts a public sidewalk, measured at the sidewalk level for each story that abuts a public sidewalk.

- *Floor Number*. The ~~ACM~~Compliance Software User's Manual and Help System shall describe how to determine each floor (story) of a building and how to determine if there is a Display Perimeter associated with each floor (story) of the building, and that a public sidewalk shall be surfaced with a material considered acceptable for sidewalks by the local codes, shall be readily accessible to the public view. Explain that the display perimeter is intended for applications where retail merchandise needs to be viewed by the passing public.

Explain that the *Maximum Fenestration Area* is 40 percent~~%~~ of the gross exterior wall area of the entire permitted space or building that can be occupied, or, if Display Perimeter is specified, the *Maximum Fenestration Area* is either 40 percent~~%~~ of the gross exterior wall area of the entire permitted space or building, or six feet times the Display Perimeter for the entire permitted space or building, whichever value is greater.

Explain that the *Maximum West-Facing Fenestration Area* is 40 percent~~%~~ of the gross exterior west-facing wall area of the entire permitted space or building that can be occupied, or, if Display Perimeter is specified, the *Maximum West-Facing Fenestration Area* is either 40 percent~~%~~ of the gross exterior west-facing wall area of the entire permitted space or building, or six feet times the west facing display perimeter for the entire permitted space or building, whichever value is greater.

4.3.4.6 Solar Heat Gain Coefficients of Fenestration in Walls and Doors

Explain how to determine solar heat gain coefficients and relative solar heat gains for fenestration in walls and doors, as defined in the Standards, and explain how and when each is used in modeling the characteristics of buildings.

Describe how and when the user enters solar heat gain coefficient from the Commission default Table or an NFRC label. This solar heat gain coefficient (SHGC) shall apply to the full fenestration area. Fenestration solar heat gain coefficient for each glazing surface shall be entered as it occurs in the construction documents for the building.

Explain to the user that the basis of the standards are the appropriate maximum RSHG values from Tables 143-A, ~~and~~ 143-B, and 143-C of the Standards according to occupancy type, climate zone and orientation. Note that the maximum RSHG is different for north oriented glass; and that, for the purposes of establishing standard design RSHG, north glass is glass in exterior walls and doors facing from 45° west (not inclusive) to 45° east (inclusive) of true north.

For nonresidential buildings, high-rise residential buildings and hotels and motels, approved methods for accounting for the shading effects of site assembled, and field-fabricated fenestration assemblies are the information reported on an approved NFRC L~~l~~abel Certificate, CEC's D~~d~~efault T~~t~~able (Table 116-B of the Standards), and the value calculated in ~~ACM Reference Nonresidential Appendix~~ Reference Nonresidential

Appendix NA6~~NI~~ or other Commission approved methods. This shading information which includes the effects of glass, framing and mullions applies to the entire window area. Effects such as the buildup of dirt on windows are not considered differential effects between the proposed and standard design which result in energy savings. These effects are intentionally neglected by the reference method and shall be considered the same in proposed and standard designs ~~for~~ by ~~ACM~~compliance software~~s~~.

4.3.4.7 Overhangs

Describe how users model overhangs over windows, including the following:

- *Overhang projection.* The distance the overhang projects horizontally from the plane of the window.
- *Height above window.* The distance from the top of the window to the overhang.
- *Window height.* The height of the top of the window from the bottom of the window, to which the overhang is applied.
- *Overhang Extension.* The distance the overhang extends past the edge of the window jams.

Instruct the user to simulate overhangs in the proposed design for each window as they are shown in the construction documents. Overhangs may not be grouped unless they are applied to windows facing the same direction with the same window height and the overhang has the same overhang projection, height above window, and the overhang is continuous from one window in the group to another.

4.3.4.8 Vertical Shading Fins

Describe how vertical shading fins are modeled.

Describe the constraints on the use of vertical shading fins, i.e. the fins shall be attached to the building. Objects that are separate from the building, such as adjacent buildings, may not be modeled as vertical fins. Building self-shading may be modeled as vertical fins and overhangs if the software does not have other means of modeling self-shading.

4.3.4.9 Exterior Fenestration Shading Devices

Describe how the user enters parameters describing exterior fenestration shading devices.

Describe any restrictions on the parameters, i.e. the devices shall be attached to the building that the user is modeling for compliance.

4.3.4.10 Window Management

Describe how the ~~ACM~~compliance software models window management and emphasize that this management is an assumption required for all ~~ACM~~compliance software~~s~~, not a user option. The assumptions regarding window management include the effects of well-operated interior draperies.

Include the description of the proposed design assumptions that include interior drapes with a solar heat gain coefficient multiplier of 0.80.

4.3.4.11 Glazing or Fenestration in Exterior Roofs (Skylights)

Explain how to model heat transfer through all glazing or fenestration (transparent and translucent) in exterior roofs of the building envelope. The user shall account for many features of such glazing. These features, including all standard and proposed modeling assumptions and inputs, are described in the following sections.

4.3.4.12 Fenestration Areas of Glazing in Exterior Roofs (Skylights)

Describe how the user shall model the exposed surface area of each transparent or translucent surface, and shall describe how the user shall enter the proposed design fenestration areas as they are shown in the construction documents. Fenestration surfaces in roofs include openings in roofs and horizontal roof doors of the building.

Explain how the ~~ACM~~compliance software determines the effects of these fenestration areas, including describing that:

1. When the Skylight Roof Ratio (SRR) in the proposed design is ≤ 0.05, the standard design shall use the same fenestration area and layout as on each proposed design exterior roof.

   EXCEPTION: When skylights are required by ~~Section~~§ 143(c) (low-rise conditioned or unconditioned enclosed spaces that are greater than ~~25~~8,000 ft^2 directly under a roof with ceiling heights greater than 15 ft and have a lighting power density for general lighting equal to or greater than 0.5 W/ft^2) and the SRR in the proposed design is less than the minimum, the standard design shall have a SRR of 3.0 percent~~%~~ for 0.5 W/ft^2 ≤ LPD < 1.0 W/ft^2, 3.3 percent~~%~~ for 1.0 W/ft^2 ≤ LPD < 1.4 W/ft^2, and 3.6 percent~~%~~ for LPD ≥ 1.4 W/ft^2 in one half of the area of qualifying spaces.

2. When the Skylight Roof Ratio in the proposed design is > 0.05, the ~~ACM~~compliance software shall determine the horizontal fenestration area of the standard design by multiplying the fenestration area of each modeled skylight in each exterior roof by a fraction equal to:

Equation N4-3 $$SRR_{standard}/SRR_{proposed}.$$

The U-factor and solar heat gain coefficients of individual skylights may be combined by area-weighted averaging only if they are not being used for daylighting and if they are in the same zone.

4.3.5 Lighting

Describe how users enter lighting parameters. The documentation shall describe how to enter lighting for each space being modeled.

Request the user to indicate one of the following conditions for the building:

1. *Lighting Compliance Not Performed*. Require the user to enter the occupancy type of each space from Table N2-5 and Table N2-6 ~~Table N2-2 or Table N2-3~~ of this manual. The documentation shall explain that Table N2-6~~2~~ may be used even if the building has multiple occupancies.

2. *Lighting Compliance Performed*. Require the user to indicate whether lighting plans will be submitted for a portion of the building or for the entire building (excluding the residential units of high-rise residential buildings and hotel/motel guest rooms). If lighting plans will be submitted for a portion of the building, the documentation shall require the user to select the occupancy type of each space from Table N2-6~~3~~ of this manual. However, if lighting plans will be submitted for the entire building, the ~~ACM~~Compliance Software User's Manual and Help System shall require the user to select the occupancy type of each space from Table N2-5 and Table N2-6 ~~Table N2-2 or Table N2-3~~ of this manual. The documentation shall explain that for spaces without specified lighting level, the ~~ACM~~compliance software selects the default lighting level from Table N2-5~~Table N2-3~~.

Explain that if the modeled Lighting Power Density (LPD) is different than the actual LPD calculated from the fixture schedule for the building, ~~ACM~~compliance software~~s~~ shall model the larger of the two values for the compliance run and shall print that value for "Installed Lighting" on the Certificate of Compliance.

Request the user to enter the Tailored Lighting Allotment and lighting control credits for each zone when they are applicable and the ~~ACM~~compliance software uses those features. If a value is input for the Tailored Lighting Allotment, the user shall provide lighting plans that comply with the prescriptive requirements and all necessary Tailored Lighting Forms and Worksheets documenting the lighting and its justification.

Describe how to address lighting controls.

- If a value is input for lighting control credits, the user shall provide documentation that lighting control credits have been used in compliance.
- ~~ACM~~Compliance software users may not take credit for lighting controls that would otherwise be required by the Standards, especially by mandatory requirements.

- For lighting controls required by § 131(c)2 (either a multi-level automatic daylighting control or an astronomical multi-level time switch control), no credit is permitted for the minimally compliant control (astronomical multi-level time switch control), which is automatically modeled in both the proposed building and the standard building; however, if automatic multi-level daylighting controls are used, the proposed building benefits from an additional lighting power reduction.
- If the ~~ACM~~compliance software allows the user to select from various types of lighting controls, warn users that the control type selected shall be installed in the entire floor area in the space or zone modeled in the program.

4.3.6 HVAC Systems and Plant

4.3.6.1 Thermal Zones

Describe the number of thermal zones (a minimum of fifty) that the ~~ACM~~compliance software is capable of modeling and the minimum control capabilities that shall be included in each of these zones.

If a proposed building design has twenty thermostats or less, require the user to model the same number of zones as there are independent thermostats. Hence zones may only be combined when there are more than twenty (20) HVAC zones in a proposed building design. The methods of combining thermal zones shall be consistent with the definition ZONE, SPACE-~~-~~CONDITIONING in ~~Section~~§ 101(b)~~ of the Standards~~.

Explain the characteristics that will lead to zones being similar, so they may be combined into one zone for modeling purposes, and the characteristics that will lead to the zones being dissimilar. An example of similar zones may be central core areas on multiple floors of a multi-story building when they are served by the same system or systems of the same category. See Section 4.3.6.19 for combining like systems. An example of dissimilar zones may be a perimeter area on one facade of a building, part of which includes glazing and part of which has no glazing. The conditions in these two areas are sufficiently dissimilar that the areas should be treated as two zones (if they are independently controlled) even though they are on the same floor and facing the same orientation.

Emphasize that the distribution of heating and cooling shall be well balanced across any area that is to be considered as one zone.

Explain that zoning the building for compliance calculations shall be consistent with the actual zoning of the building if the actual zoning is known at the time of the analysis. If there are more actual zones than the program is capable of modeling, actual zones may be merged together for compliance purposes, as long as it can be established that the grouped zones are thermodynamically similar such that physical comfort could be maintained by a single thermostat or HVAC-controlling device/sensor.

Show that the ultimate test is to use non-coincident load calculations to show that actual zones grouped together for compliance calculations have the same or similar peak heating and cooling load profiles. This is done with a design load calculation which considers the peak load by month and hour.

Explain that physical zones which have the same or similar glazing orientation(s), the same or similar glazing area to floor area and the same occupancy types will be thermodynamically similar since, for example, they experience their peak cooling loads at the same hour. These zones can be merged together for compliance calculations.

Tell the ~~ACM~~compliance software user that the standard design uses exactly the same zoning as in the proposed building design.

Describe how to zone a building that does not include an HVAC system in the design.

- Any building or separate permitted space smaller than 2500 ft^2 in conditioned floor area without an HVAC system or design may be modeled as having only a single HVAC zone.
- For buildings or permitted spaces 2,500 ft^2 and greater, each floor of the building shall be divided into multiple thermal zones according to the following procedure:

1. Determine the ratio (R) of the floor's total conditioned area to the gross exterior wall area associated with the conditioned space.
2. For each combination of occupancy type and exterior wall orientation create a perimeter zone. The floor area of each perimeter zone shall be the gross exterior wall area of the zone times R or 1.25, whichever is smaller.
3. Model the exterior space adjacent to each wall orientation as a separate exterior zone. Spaces adjacent to walls which are within 45 degrees of each orientation shall be included in the zone belonging to that orientation.
4. For cases where R is greater than 1.25, create an interior zone for each occupancy type. For each occupancy type, the floor area of the interior zone shall be the total area less the floor area of the perimeter zones created in paragraphs 2 and 3 above.
5. Prorate the roof area and the floor area among the zones according to the floor area of each zone. Prorate the roof and floor areas among the perimeter zones created in paragraphs 2 and 3 above according to the floor area of each exterior zone.
6. Assign skylights to interior zones. If the skylight area is larger than the roof area of the interior zone, then the skylight area in the interior zone shall be equal to the roof area in the interior zone and the user shall prorate the remaining skylight area among the perimeter zones based on the floor area.
7. If the area of the zone is less than 300 ft^2, combine it with its adjacent zone of the same occupancy type and zone type (interior or exterior).
8. Courtyards are considered outside or ambient air. Walls, floors, and roofs separating conditioned spaces from courtyards are exterior walls, floors, and roofs. Create an exterior zone for each wall orientation separating the conditioned space from the courtyard. The user shall not combine these exterior zones with other exterior zones even if their exterior walls have the same orientation.
9. Model spaces adjacent to demising walls as interior zones. Combine these zones with other interior zones within the same occupancy type.
10. Ignore all interior walls and model partitions separating thermal zones as air walls with U-factor of 1.0 Btu/h-ft^2-^oF.

Since the Commission considers a larger number of modeled HVAC zones to be a more accurate representation, the ~~ACM~~Compliance Software User's Manual and Help System shall inform ~~ACM~~compliance software users that the local enforcement agency may (at its own discretion) require the applicant to model additional HVAC zones.

4.3.6.2 Primary Systems

Include a list of the primary systems that the ~~ACM~~compliance software can model.

Explain each required input parameter that is needed to describe each primary system, and shall explain how the user determines the appropriate input for any proposed design that will use the input.

Describe any constraints on each primary system, such as maxima, minima, ranges, or specific design applications.

4.3.6.3 Cooling Equipment

Describe how the user shall enter parameters that describe cooling equipment type, efficiency, capacity, or other parameters that are required to model the operation of the cooling system.

Describe to the user how to enter the number and names of zones served by the HVAC system so that the ~~ACM~~compliance software may determine the use of single or multi-zone systems and so that the user correctly assigns each zone to an HVAC system serving it.

Describe how the user shall enter parameters that determine the required efficiency of the equipment, the efficiency descriptor that shall be used, and, when applicable, heat transfer fluid.

Describe each type of cooling equipment that the ~~ACM~~compliance software is capable of modeling, and any constraints, such as maxima, minima, or ranges, that the user shall consider when modeling specific equipment.

4.3.6.4 Heating Equipment

Describe how the user shall enter parameters that describe heating equipment type, efficiency, capacity, or other parameters that are required to model the operation of the heating system.

Describe how the user shall enter parameters that determine the required efficiency of the equipment, the efficiency descriptor that shall be used, and, when applicable, the part load ratio and heat transfer fluid.

Describe each type of heating equipment that the ~~ACM~~compliance software is capable of modeling, and any constraints, such as maxima, minima, or ranges, that the user shall consider when modeling specific equipment.

4.3.6.5 Standard Design System Selection

Include a description of the required user input for: building type, system type (especially single zone or multi-zone), heating source, and cooling source, so that the ~~ACM~~compliance software and the reference method can properly determine the Standard HVAC System and Plant in the standard building design.

Explain the proper use of the ~~ACM~~compliance software for compliance purposes.

Do not describe the standard design system types that are used to generate the standard design budget

Do not describe which system types in the standard design are used as the basis for comparison to proposed design system types. Such information may be included as a separate Technical Engineering Document for the ~~ACM~~compliance software.

Describe any restrictions or limitations that the user should apply when entering parameters that describe the systems.

4.3.6.6 Cooling Efficiency of DOE Covered Air Conditioners

Describe how the user determines the proper efficiency descriptor for air conditioners that are Covered Consumer Products, and how the user shall enter these descriptors into the ~~ACM~~compliance software.

4.3.6.7 Cooling Efficiency of Packaged Equipment not Covered by DOE Appliance Standards

Describe how the user determines the proper efficiency descriptor for packaged air conditioners that are not Covered Consumer Products, and how the user shall enter these descriptors into the ~~ACM~~compliance software.

4.3.6.8 Efficiency of Cooling Equipment Included in Built-up Systems

Describe the required user input parameters for:

- Type of central water chilling plant equipment,
- The number of central chilling units,
- The capacity of each unit,
- The electrical input ratio of each central chilling unit,
- The type of refrigerant to be used in each chilling unit.

4.3.6.9 Heating Efficiency of DOE Covered Equipment

Describe how the user determines the proper efficiency descriptor for heating equipment that are Covered Consumer Products, and how the user shall enter these descriptors into the ~~ACM~~compliance software.

4.3.6.10 Heating Efficiency of Equipment Not Covered by DOE Standards

Describe how the user determines the proper efficiency descriptor for heating equipment that are not Covered Consumer Products, and how the user shall enter these descriptors into the ~~ACM~~compliance software.

4.3.6.11 Electric Motor Efficiency

Explain that the motor efficiency shall be determined as established in accordance with NEMA Standard MG1.

4.3.6.12 ARI Fan Power

Describe how users enter the fan power for each system type.

4.3.6.13 Process Fan Power

Explain that fans used exclusively for process shall not be modeled in the compliance run.

Describe how users shall subtract out the portion of fan power used for process if the fan serves a process as well as conditioning the space.

4.3.6.14 Fan System Operations

Describe the required schedules that are used for fan system operation.

Explain how the ~~ACM~~compliance software models intermittent fan operation for the residential units of high-rise residential buildings and hotel/motel guest rooms.

4.3.6.15 Fan Volume Control

Describe the types of fan volume control that are available to the user, and any restrictions on the use of each fan system.

4.3.6.16 Design Fan Power Demand

Describe how the user enters parameters describing the fan power. These parameters shall include the design brake horsepower, the design drive/motor efficiency, and the design motor efficiency, all at peak air flow rate. The parameters shall be provided for each supply and each return fan.

Explain that if the user does not input the above required parameters, the ~~ACM~~compliance software shall assume that no mechanical compliance will be performed and shall model the default mechanical system.

Explain how ~~ACM~~compliance software~~s~~ may combine return fans with the supply fan if and only if the controls are of the same type. For example, ~~ACM~~compliance software~~s~~ may combine fans if they all have variable speed drive control or if they all are constant volume fans.

4.3.6.17 Air Economizers

Describe when economizers are required and when they are used as the basis of the performance compliance.

Describe how to enter parameters describing the economizer and its method of operation.

Describe any restrictions on the modeling of economizers by the ~~ACM~~compliance software.

4.3.6.18 Modeling Default Heating and Cooling Systems

Explain that the ~~ACM~~compliance software automatically selects and models default heating and cooling systems identical to the standard systems defined in Chapter 2 (Standard Design Systems) for the following conditions:

1. Mechanical compliance not performed. The User's Manual and Help System shall describe what parameters shall be entered by the user to allow the ~~ACM~~compliance software to select the proper default heating and cooling systems such as the building type and the number of thermal zones. The documentation shall explain the guidelines for zoning a building as described in Chapter 2.

2. Mechanical compliance performed with no heating installed. The User's Manual and Help System shall describe that the ~~ACM~~compliance software automatically models the default heating system for spaces with no installed heating or spaces which use the existing heating system. The documentation shall also describe what parameters shall be entered by the user to allow the ~~ACM~~compliance software to select the proper default heating system such as the building type and the number of thermal zones in the permitted space.
3. Mechanical compliance performed with no cooling installed. The User's Manual and Help System shall describe that the ~~ACM~~compliance software automatically models the default cooling system for spaces with no installed cooling or spaces which use the existing cooling system. The documentation shall also describe what parameters shall be entered by the user to allow the ~~ACM~~compliance software to select the proper default cooling system such as the building type and the number of thermal zones in the permitted space.

4.3.6.19 Combining Like Systems

Explain that users may model like systems together as one system provided the systems serve the same thermal zone or the thermal zones served by the individual units are similar and are being combined. The characteristics that lead to zones being similar are described in Chapter 2. The equipment being combined shall also all be of the same category.

A separate category shall exist for each change in efficiency standard level in the Appliance Efficiency ~~Standards~~ Regulations and in ~~Section~~§ 112. These categories shall be listed in the supplement.

4.3.6.20 System Supply Air Temperature Control

Describe the control strategies that the ~~ACM~~compliance software can model, and describe the parameters that the user shall enter to model these strategies. At a minimum, the ~~ACM~~Compliance Software User's Manual and Help System shall describe strategies for constant supply air temperature when heating or cooling, and outdoor air reset for the cooling supply air temperature.

4.3.6.21 Zone Terminal Control

Describe when the user shall enter zone terminal control parameters, and how the user shall enter parameters for:

1. Variable air volume
2. Minimum box position
3. (Re)heating coil
4. Hydronic heating
5. Electric heating

Explain the criteria for minimum box position for variable volume systems.

4.3.6.22 Pump Energy

Explain that the ~~ACM~~compliance software accounts for the pump energy for the hot water, chilled water, and condenser water piping systems.

For multiple pump systems, explain how to calculate the weighted average pump efficiency for the system.

Show the default values for the hot water, chilled water, and condenser loop piping systems.

4.3.6.23 Chiller Characteristics

Describe how the user enters chiller parameters that are required in the ~~ACM~~compliance software, the chiller options that are available within the ~~ACM~~compliance software, and the constraints on these parameters.

Show default values for the chiller options.

4.3.6.24 Performance Curves for Electric Chillers

Explain that the ~~ACM~~compliance software allows modeling custom performance curves for electric chillers.

Describe the input requirements for calculating the regression constants for the chiller performance.

Explain that the ~~ACM~~compliance software uses default performance curves if the user chooses not to make any entries.

4.3.6.25 Air-Cooled Condensers

Describe how the user is allowed to account for the characteristics of air-cooled condensers.

4.3.6.26 Cooling Towers

Describe how the user enters cooling tower parameters that are required in the ~~ACM~~compliance software, the cooling tower options that are available within the ~~ACM~~compliance software, and the constraints on these parameters.

Show default values for the cooling tower options.

4.3.6.27 Service Water Heating

Describe the parameters that the user shall enter to describe the water heating system, the efficiency of each water heater and the load that the water heater shall meet.

Describe that the user shall assign the load to individual water heaters when either more than one water heater is used to meet the load on one system, or when multiple systems are used in a building. When more than one water heater is used to meet the load for one system, the load distributed to each water heater in accordance with the following equation.

Equation N4-4

$$LOAD_k = LOAD_T \times \frac{OUTPUT_k + 453.75 \times VOL_k}{\sum_{m=1}^{n} (OUTPUT_m + 453.75 \times VOL_m)}$$

Where:

$LOAD_k$ = Portion of total load met by water heater k.

$LOAD_T$ = Total water heating load of system in Btu/hr.

$OUTPUT_m$ = Full load output capacity of water heater m.

VOL_m = Actual storage capacity in gallons of water heater m.

4.3.6.28 Duct Efficiency Calculation

Describe the parameters that the user shall enter to describe the air distribution system when Chapter 5~~7~~ and ~~ACM Appendix NG~~Reference Nonresidential Appendix NA2~~5~~ are used in conjunction with verified duct sealing.

4.3.7 Water Heating

Refer to Section 2.5, HVAC Systems and Plants for modeling requirements for service water heating systems.

4.4 Optional Modeling Capabilities

Provide detailed instructions on the documentation needed for optional capabilities, including instructions on how the ~~ACM~~compliance software models the capability, which required capability will be used as the basis of the standard design for the capability, and any restrictions on the input values for the capability.

4.4.1 Additions and Alterations

Describe how users model additions, alterations, and additions plus alterations to the existing building.

4.4.1.1 Additions Performance Compliance

Explain that an addition is treated similar to a new building in the performance approach. Since both new conditioned floor area and volume are created with an addition, all systems serving the addition will require compliance to be demonstrated. This means that either the prescriptive or performance method can be used for each stage of the addition's construction.

Addition Only

Explain that additions -shall meet the requirements for new buildings.

Explain that the user shall input all envelope, lighting and HVAC data associated with new conditioned space. If the HVAC zone serving the addition includes a portion of the existing building, prorate the capacity, fan power and cfm of the system serving the addition according to the design loads in the addition as compared to the loads in the whole zone.

Explain that if the permit is done in stages, the rules for each permit stage apply to the addition performance run. If the whole addition is included in the permit application, the rules for whole buildings apply.

Existing plus Addition

Explain that additions may also show compliance by demonstrating that efficiency improvements to the existing building offset decreased addition performance. Standards §149(a)2 states that the envelope and lighting of the addition, and any newly installed space conditioning or service water heating system serving the addition, shall meet the mandatory measures just as if it was an addition only. It also allows the applicant to improve the energy efficiency of the existing building so that it meets the energy budget that would apply to the entire building, if the existing building was unchanged, and the addition complied on it own.

Demonstrate that the existing-plus-addition analysis includes a calculation of the energy use of the existing building. In this approach, the following steps shall be followed:

a) Collect and document all information on the existing building before the addition and/or remodel.

b) Analyze the energy performance of the existing building before any changes take place.

c) Analyze the energy performance of the existing building plus the addition, including any alterations to the existing building.

d) The estimated energy use of the altered existing building plus the addition shall be less than the estimated energy use of an addition that complies with the prescriptive standards and the estimated energy use of the original existing building.

Explain to the user that when using this compliance approach, it is important to take into account all changes in fenestration, especially windows and skylights which are removed from or added to the existing house as part of the remodel. Credit may be gained in this context by insulating previously uninsulated parts of the building envelope.

Note for the reader the term "entire building" means the ensemble of all enclosed space in a building, including the space for which a permit is sought, plus all conditioned and space within the structure.

When using this compliance approach it is important to take into account all alterations in the buildings features that are removed from or added to the existing building.

Documentation of the existing buildings features is required to be submitted with the permit application if this method is used.

4.4.1.2 Alterations Performance Compliance

Describe how to use the ~~ACM~~compliance software with alterations.

4.4.1.3 Alteration Only and Existing with Alteration

Explain that altered spaces that show compliance with the method independent of the existing building, shall meet the requirements for new buildings.

Explain that the envelope and lighting of the alteration, and any newly installed conditioning or service water heating system serving the alteration, shall meet the mandatory measures.

Explain to the user which building envelope measures may be modified in the existing building to obtain compliance credit. See ~~Section~~§ 149~~ of the Standards~~.

If the permit is done in stages, explain that the rules for each permit stage apply to the alteration performance run.

Explain that if all the alterations' components, including the envelope, mechanical and lighting systems, are included in the permit application, the rules for whole buildings apply.

Explain that it is important with this approach to take into account all changes in the buildings features that are removed from or added to the existing building as a part of the alteration.

Explain that existing buildings features shall be documented and submitted with the permit application.

4.4.1.4 Alternate Performance Compliance Method

Explain that any addition, alteration or repair may demonstrate compliance by meeting the applicable requirements for the entire building.

Explain that the entire building could be shown to comply in permit stages or as a whole building. The rules for new buildings, and both permit stage compliance and whole building compliance would apply.

Explain that existing buildings features shall be documented and submitted with the permit application.

4.4.2 Alternative Occupancy Selection

4.4.2.1 Alternate Occupancy Selection Lists

Explain how to use alternate selection method for choosing occupancies.

4.4.2.2 Lighting Controls

The ~~ACM~~Compliance Software User's Manual and Help System shall describe how to enter lighting controls, how to account for installed lighting and how to document the location and quantity of lighting on the appropriate forms.

4.4.2.3 Light Heat to Zone

The ~~ACM~~Compliance Software User's Manual and Help System shall describe how to enter the light heat that goes to the zone and to the return air, how to account for the light energy, and how to document the type, location, and quantity of lighting fixtures for which this option is being modeled on the appropriate forms.

4.4.3 HVAC Systems and Plant

Include descriptions of all the optional systems that the ~~ACM~~compliance software is capable of modeling. Optional systems that are allowed are described in Section 3.3.5.

Provide a detailed description of each optional system that is modeled, describe the system type that is used as the comparative standard design as described for minimum system capabilities, and describe any restrictions on the capabilities of each optional system.

Require the user of the ~~ACM~~compliance software to provide manufacturers data, plans and specifications to document the assumptions used for each optional system.

4.5 Vendor Defined Optional Capabilities

Optional capabilities that are not described in this manual may be proposed by ~~ACM~~compliance software vendors. Once the Commission has accepted a vendor defined optional capability, the ~~ACM~~Compliance Software User's Manual and Help System shall include a description of how the user enters the appropriate parameters for the capability, a description of the documentation that shall be provided when using the capability, and a description of any restrictions that shall be applied when using the capability.

4.6 Compliance Forms

A chapter or section shall focus on how standard compliance forms are automatically generated and how to get diagnostic output when a building fails to comply (since compliance forms cannot be generated when a building fails to comply). ~~ACM~~Compliance software~~s~~ shall print out the standard compliance forms with essentially the same format and layout to the standard forms. Mention should be made of:

- The requirement to document Tailored Lighting Allotments with lighting plans and prescriptive forms for each HVAC zone;
- The requirement to document Tailored Ventilation and/or Process Loads;
- The requirement to complete other forms for submittal when applicable;
- The requirement to document the zoning of the building if the zoning is not evident on the plans; and,
- Certificate of Compliance when applicable.

At least one sample of each compliance form shall be included. It is recommended, but not required, that the ~~ACM~~Compliance Software User's Manual and Help System contain several sample variations of each compliance form as needed to illustrate different compliance scenarios and input types.

5. Reference Method Comparison Tests

This chapter explains the methods used to test the modeling and input capabilities of ~~Alternative Calculation Methods (ACM~~compliance software~~s)~~ relative to the reference program. The ~~ACM~~compliance software shall be able to accept all required inputs but it need not be capable of modeling all features as long as it automatically fails proposed designs with features beyond its accurate modeling capabilities. For example, a simplified calculation method modeling only single zone HVAC systems could be approved if it automatically fails proposed designs that enter multi-zone HVAC systems for the proposed design. For ~~ACM~~compliance software~~s~~ with limited capabilities, the vendor shall inform users that the ~~ACM~~compliance software is not capable of modeling certain features. While most of the tests are performed in three climate zones, some of the tests use other climate zones.

There are a total of 76 specified tests. All the runs described in this chapter shall be performed with the ~~ACM~~compliance software, and run results shall be summarized on the forms contained in Appendix ~~N~~A.

5.1 Overview

~~ACM~~Compliance software~~s~~ calculate six components of annual building source energy use:

1. Lights
2. Space cooling
3. Space heating
3. Indoor fans
4. Receptacles
5. Service water heating

To test the minimum ~~ACM~~compliance software capabilities, it is necessary to perform a series of computer runs. Each computer run represents a systematic variation of one or more features that affects TDV energy use. Some of the parametric runs are performed in several climate zones for more than one prototype building. Most, however, are designed for only one prototype in just one or two of the climate zones.

For an ~~ACM~~compliance software to be approved, the criteria described in Section 5.1.4 shall be met. This criteria compares the energy use differences, calculated using the ~~ACM~~compliance software, to the energy use differences calculated using the reference calculation method. The energy use difference or compliance margin for each of these is the difference between any simulated proposed building design TDV energy and the standard design's TDV energy. For this comparison the same proposed design and corresponding standard design shall be used for both the candidate ~~ACM~~compliance software and the reference program. In order to get approved, a~~A~~ candidate ~~ACM~~compliance software shall pass~~meet~~ all of the tests described in this manual.

The ~~ACM~~compliance software vendor is responsible for running the tests for the candidate ~~ACM~~compliance software ~~and the reference method~~. The vendor shall provide documentation, reasons and engineering justification for all inputs to the ~~ACM~~compliance software ~~and the reference method~~.

5.1.1 Base Case Prototype Buildings and HVAC Systems

The tests are performed with four prototype buildings, summarized in the following paragraphs. The letter designation is used as part of the label for each computer run.

A) This prototype is a one-story building measuring 30 ft by 75 ft and is 12 ft high. Glass exists in a continuous band around the entire building perimeter with the sill 2.5 feet above the floor. The building has a single thermal zone.

B) This prototype is a two-story building measuring 60 ft by 60 ft and is 24 ft high. Glass exists in a mostly continuous band around the entire building perimeter on each floor with the sill at 2.5 ft above the floor. Most tests using prototype B have no interior zones. The building has four thermal zones per floor that are 15 ft deep. In most of the tests using this prototype the interior zones have been purposely removed to increase the sensitivity to envelope measures using separate orientations and wall types for each thermal zone. The prototype should have adiabatic, mass-less walls separating the perimeter zones from the unconditioned interior zones. These separate zones are more sensitive to the measures examined than an envelope- dominated single zone which can mask orientation and individual wall effects. The sensitivity to HVAC sizing methods is also increased when this prototype is envelope dominated.

   In some tests to measure internal energy use differences or economizer cycle sensitivity, the 30 ft by 30 ft interior space becomes two conditioned zones (one on each floor) served by a separate packaged variable air volume system. In these cases there are five thermal zones per floor.

C) This prototype is a six-story building measuring 60 ft by 60 ft by 66 ft high- 12 ft from floor to floor. Glass exists in a mostly continuous band around the entire perimeter of the building on each floor with the sill 2.5 ft above the floor. The building has a total of fifteen thermal zones: Five on the first floor, five on the middle floors and five on the top floor. A multiplier of four is used for the middle floors.

D) This prototype represents a tenant improvement space in that it has only two exterior walls with two demising "party" walls. The "party" walls are each adjacent to an unconditioned space of the same dimensions as the conditioned space (viz. 20 ft wide, 60 ft deep and 12 ft high). These party walls have nominal 2x4 steel stud framing with R-13~~1~~ insulation between framing members and 0.5~~"~~ inch sheetrock on either side [CONS = DEMISING]. The unconditioned space has three other exterior walls that use JA Table 4.3.3 ~~the IV11-A2~~ wall-type construction. The roof/ceiling of the unconditioned spaces has R-19~~1~~ insulation between 2x8~~6~~ wood framing members [[4-3.4~~2-IV3-A2~~]]. The D prototype building (both conditioned and unconditioned spaces) has a slab-on-grade floor. The unconditioned spaces are modeled using a slab without carpet or pad and with no slab edge insulation. For the conditioned space, the back wall is heavyweight concrete with no windows and a wood door and the front wall is a steel-framed wall with glazing. The space is 20 ft wide and 60 ft deep and has a height of 12 ft. The glazing begins at ground level but varies in height from 4.8 to 6 ft. Tests with this prototype use overhangs and skylights and rotate the whole building geometry.

The base case prototype buildings have the same geometry and zoning in all climate zones. Default building parameters for the proposed designs are indicated for each series. Parameters not described or defaulted in the series are those given in Appendix B~~NF~~.

No test shall model NIGHT-CYCLE-CONTROL as CYCLE-ON-ANY, but rather shall default to STAY-OFF. This is a neutral credit with no trade-off and both the proposed and standard designs must use the same value.

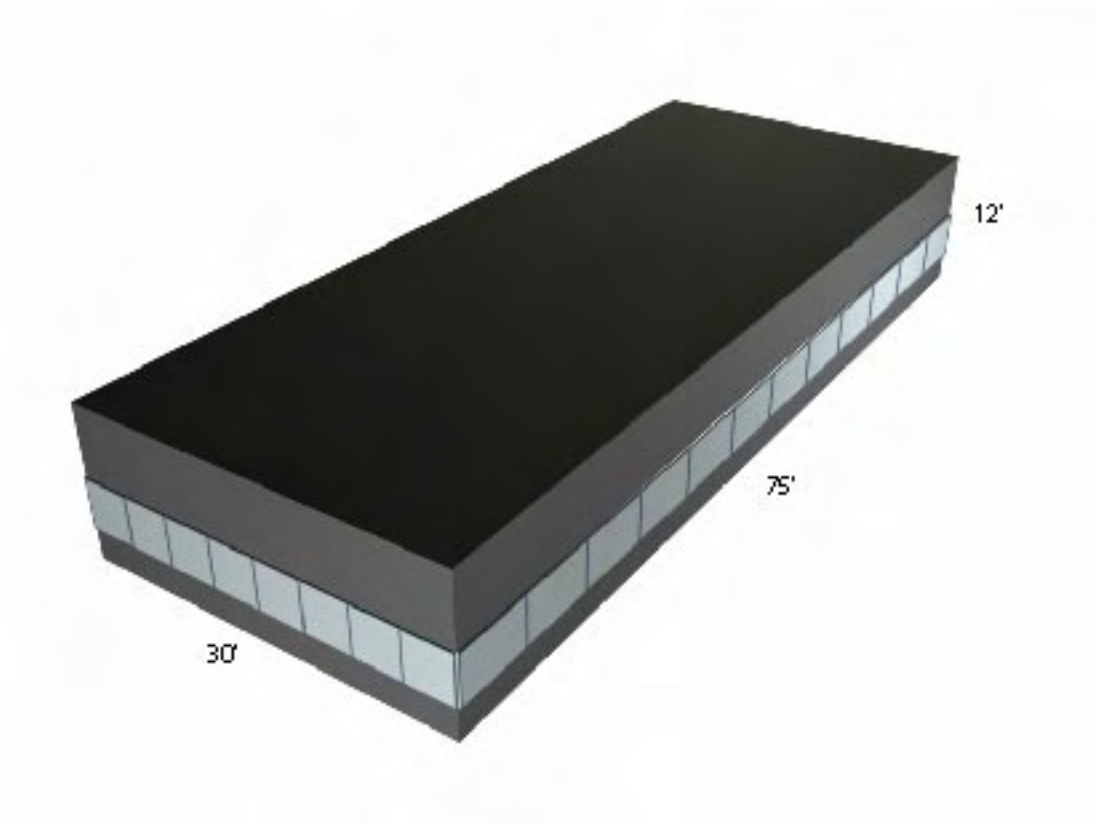

Figure N5-1 – Prototype A

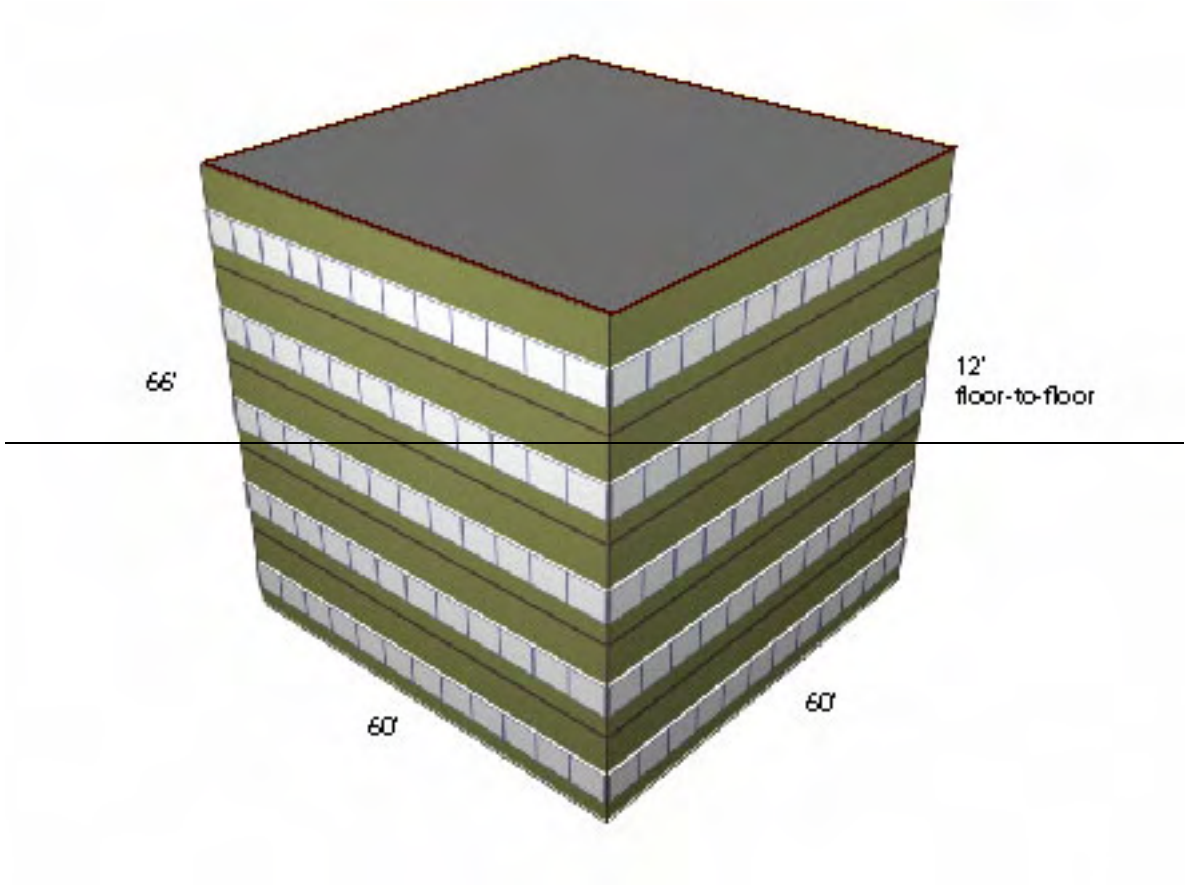
66'
12'
floor-to-floor
60'
60'

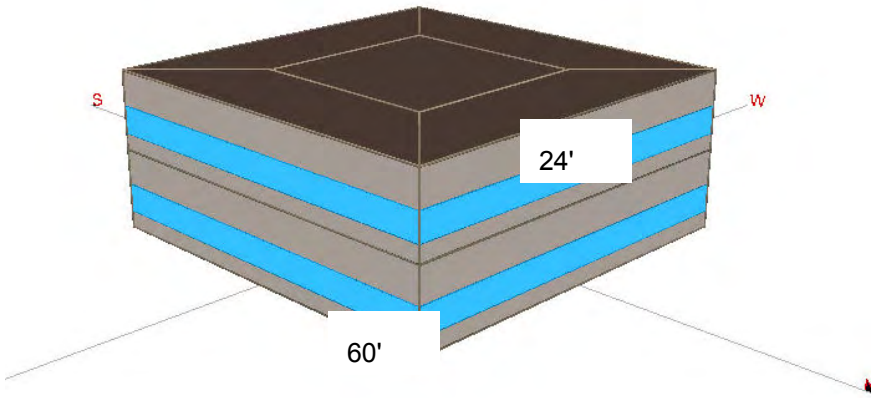

10 zone Prototype B

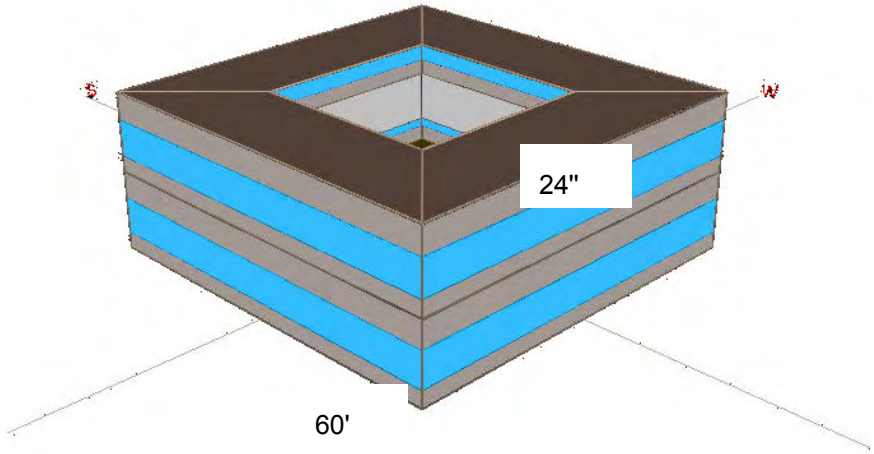

8 zone Prototype B

Figure N5-2 – Prototype B

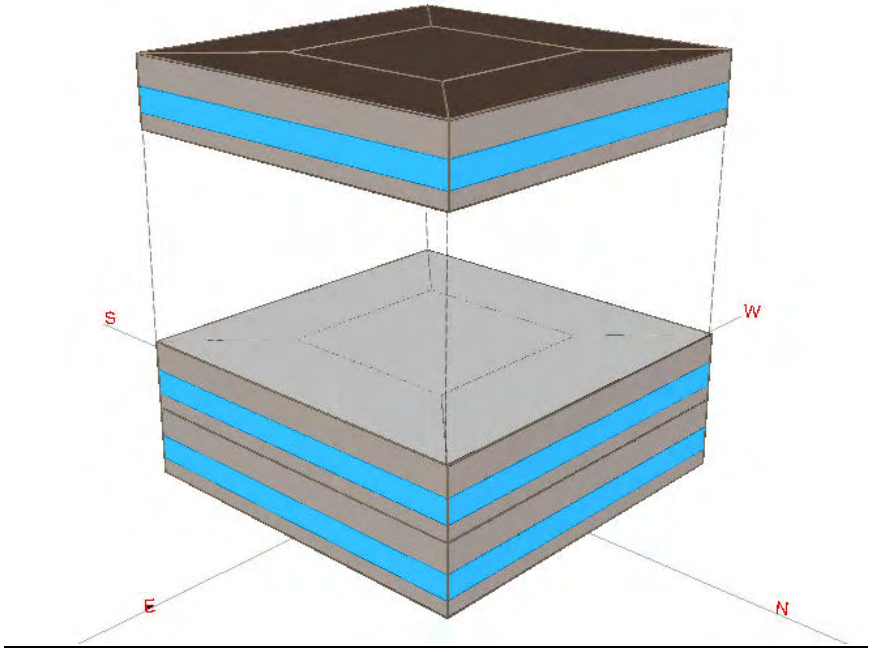

Figure N5-3 - 15-Zone Prototype C

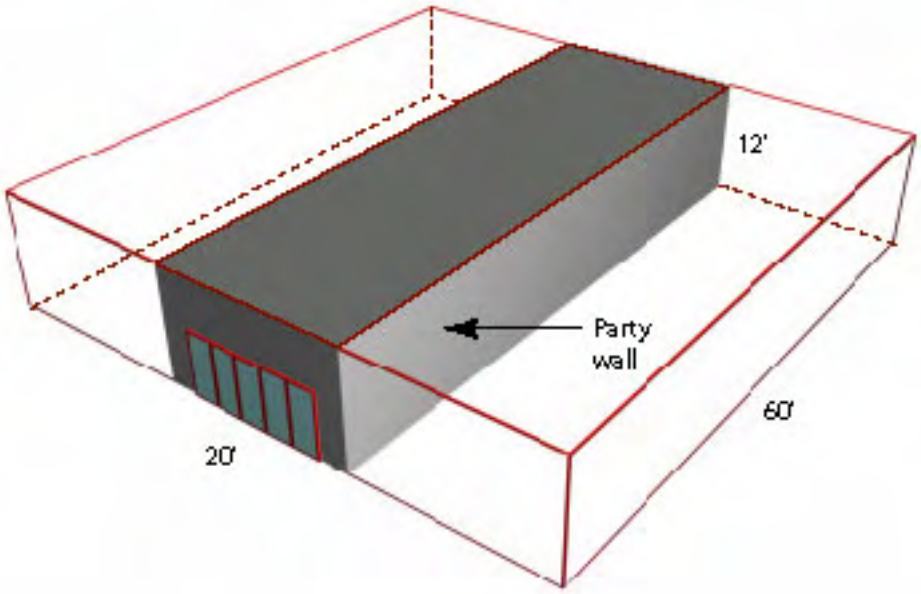

Figure N5-3 – Prototype D

The base case HVAC systems specifications shall be as noted in Table N5-1 below except for the HVAC system sizing tests in the G1 series.

Building Prototype	Cooling Capacity	EER	SEER	Heating Capacity	AFUE	CFM	BHP
Prototype A	156,000	11		200,000	0.8	5,000	4
Prototype B	384,000	10		n/a	n/a	12,800	12
Prototype C							
VAV systems	240,000	n/a	n/a	n/a	n/a	8,000	8
FPFC systems	108,000	n/a	n/a	n/a	n/a	3,600	3
Prototype D	60,000	11	13	100,000	0.8	2,000	1

5.1.2 Climate Zones

Eleven of the 16 climate zones are used in the tests. These were chosen to represent distinctly different climate types.

Table N5-1 – Climate Zones Tested

Climate Zone	Example Cities
1	Arcata, Eureka
3	Oakland, San Francisco
7	San Diego
9	Pomona, UCLA
10	Riverside
11	Red Bluff, Redding
12	Sacramento, Davis, ~~Roseville~~Placerville
13	Fresno, Visalia
14	China Lake
15	El Centro, Palm Springs
16	Mount Shasta, Tahoe City

5.1.3 Labeling Computer Runs

Each computer run used for the certification tests is given a precise designation to make it easier to keep track of the runs and to facilitate analysis. The following scheme is used:

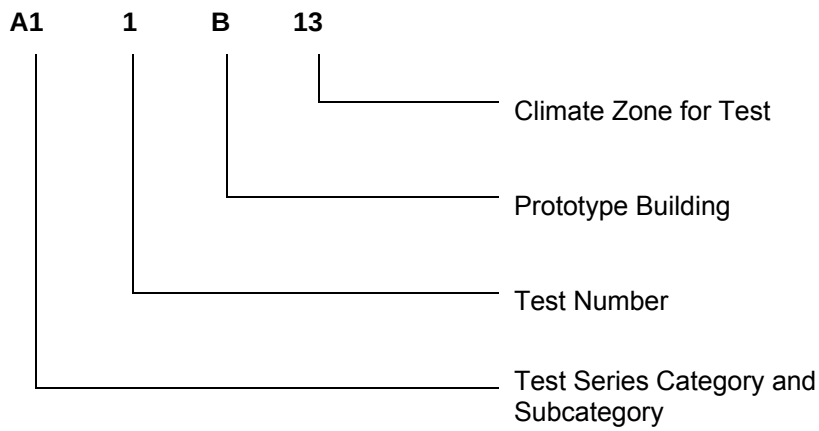

5.1.4 Test Criteria

Software vendors shall perform a series of computer runs that systematically vary the building prototypes described in Section 5.1.1. These tests consist of a series of matched pairs of computer runs. Each matched pair consists of a proposed design (prototype variation) and the standard design equivalent to the proposed design. The standard design equivalent is the proposed design automatically reconfigured by the ~~ACM~~compliance software according to the rules presented in Chapter 2.

The variations or computer runs are described in Sections 5.2 and 5.3. The computer runs shall all be performed using the modeling assumptions described in this document. For each computer run, the results from the candidate ~~ACM~~compliance software shall be within an acceptable range as defined in this section. The results of these runs shall be compared to the results of a custom budget for the standard building developed by the same program. The applicant shall calculate the following.

$$DT_a = PT_a - ST_a$$

and the Commission has already determined:

$$DT_r = PT_r - ST_r$$

Where:

Subscript "a" represents the results of the applicants ~~ACM~~compliance software and subscript "r" represents the results of the reference program, and

PT is the TDV energy for the proposed budget calculated for the building in kBtu/ft^2-yr,

ST is the TDV energy for the standard budget in kBtu/ft^2-yr.

For all tests, DT_a shall be greater than (0.85 × DT_r ~~–~~ 1) kBtu/ft^2-yr and less than (1.15 x DT_r + 1) when $DT_r \geq 0$ and DT_a shall be greater than (1.15~~315~~ × DT_r - 1) and less than (0.85 x DT_r +1) when $DT_r < 0$ to be accepted for compliance use. If any of the tests fail to meet these criteria then the ~~ACM~~compliance software will not accepted for compliance use.

For lighting and receptacle loads tests, the TDV energy use of the candidate ~~ACM~~compliance software shall be within 2.0% of the reference method.

The reference method does not allow for undersized systems to be simulated for compliance purposes. **~~ACM~~Compliance software~~s~~ shall also model only adequately sized HVAC systems.** Compliance runs that result in undersized equipment or equipment that cannot meet the heating or cooling loads for a significant fraction of the simulated run, shall not be approved for compliance purposes. **For ~~ACM~~compliance software~~s~~ that report the hours that loads are not met or the hours outside of throttling range, reports shall indicate that these hours are less than 5 percent~~10%~~ of the hours of a year for each and every test in order for ~~an ACM~~compliance software to qualify for approval.**

The ~~vender~~ vendor shall summarize the results on the forms provided in Joint Appendix NA1. As previously described, the vendor applicant may challenge the reference program results by providing alternative reference program runs and adequate documentation justifying different reference program results from those given in the Joint Appendix NA1.

5.2 General Requirements

~~An ACM~~Compliance software shall automatically perform a variety of functions including those described in Chapter 2.

- The ~~ACM~~compliance software shall accept a specified range of inputs for the proposed design, and then use these inputs to describe the proposed building on the required output forms. The proposed building inputs are also used to create a standard design building based on the proposed building and the energy budget generation rules used to incorporate the prescriptive requirements into the proposed design. Certain building descriptors remain the same for both the proposed and standard design but others will change in ways that depend upon the design characteristics, the climate zone, and the prescriptive and mandatory requirements of the standards.
- The ~~ACM~~compliance software shall automatically define the standard design; determine the proper capacity of the HVAC equipment for the standard design; adjust the HVAC capacity of the standard design in accordance with the reference method; and automatically run the standard design to establish the energy budget.
- The ~~ACM~~compliance software shall perform the energy budget run in sequence with the compliance run with no user intervention or input beyond that of the proposed design. The results are reported in Part 2 of the Performance Certificate of Compliance Form (PERF-2) when the proposed building design complies.

The applicant shall perform the tests listed in this Manual to assure that the ~~ACM~~compliance software produces results in general agreement with the reference method. These tests verify the implementation of the custom budget procedure, program accuracy and performance relative to the reference program, and acceptable use of calculation inputs.

The vendor/applicant shall submit the completed forms from Joint Appendix NA1 and backup documentation for the results of the tests described herein. For buildings that DO NOT COMPLY, the vendor shall supply diagnostic output that indicates noncompliance and gives the TDV energy information needed to evaluate the test criteria, including the lighting and receptacle portions of the energy budgets for both proposed and standard design. For building designs that do comply, the vendor/applicant shall submit copies the Certificate of Compliance generated by the ~~ACM~~compliance software.

For some of the tests, specific occupancy mixes are used and these are designated by the primary occupancy. The distribution of occupancy areas of these mixes are given in the table below. These mixes were selected to result in lighting energy densities nearly the same as those for the occupancy assumptions for spaces/areas without lighting plans.

The applicant may~~should~~ contact the Energy Commission to obtain test case documentation and information for DOE2.1E input files and output results for the reference method. Write to:

Nonresidential Compliance Software
Test Reference Inputs and Results
1516 Ninth Street, MS#25
Sacramento, CA 95814

Table N5-2 – Occupancy Mixes for Tests

Primary Occupancy	Sub-occupancy Percentages			
Mix Type	*Primary*	*Office*	*Corridor/Support*	*Storage*
Office	87.5%	~~87.5%~~	12.5%	
Retail	85.0%	3.5%	3.5%	8.0%
Clinic	85.0%		15.0%	
Storage	72.0%	18.0%	10.0%	
Grocery	82.0%	4.0%	6.0%	8.0%
Theater	70.0%	5~~16~~.0%	15~~4~~.0%	Lobby 10.0%
Restaurant	Dining Area 75.0%	Kitchen 15.0%	5.0%	*Storage* 5.0%
Other	*Others* 100.0% (Receptacle Load at 1.0 W/ft^2)			

5.2.1 Partial Compliance Tests - A1 Series (2~~3~~ tests)

The partial compliance tests use the single zone version of the A building prototype with the same features used (except as noted) in test C11A10 in Section 5.2.4~~.1~~.

Test A11A09: Building prototype A - climate zone 09 - Pomona

Partial compliance - envelope only.

~~**Test A12A09**: Building prototype A - climate zone 09 - Pomona~~

~~Partial compliance - lighting only - Envelope is already existing as input. Proposed lighting plans specify lighting watts per square foot:~~

~~Subzone Space Occupancy~~	~~Percentage of Area~~	~~Proposed Lighting~~
~~Grocery Sales Area~~	~~82%~~	~~1.50~~
~~Grocery Storage (Commercial Storage)~~	~~8%~~	~~0.80~~
~~Support/Corridors~~	~~6%~~	~~0.80~~
~~Office~~	~~4%~~	~~1.80~~

Test A12~~3~~A09: Building prototype A - climate zone 09 - Pomona

Partial compliance - envelope and mechanical only. No lighting plans submitted for grocery occupancy.

5.2.2 Exterior Opaque Envelope Tests

The exterior wall tests help to evaluate whether the applicant ~~ACM~~compliance software inserts the correct wall assemblies into the standard design as a function of the proposed design including wall frame type, heat capacity, occupancy type and climate zone. These tests use the eight (8) zone B building prototype without interior zones to increase the tests sensitivities to envelope energy impacts.

The default characteristics for these tests are:

- Prototype building B (geometry, zones, and walls)
- Office occupancy with no lighting plans
- Envelope:
  - ~~3~~5.5 inch concrete slab-on-grade floor [U-F CONS=SLABC]
  - Slab perimeter (4.4.7-A1)
  - Wood-framed roof - framing materials and layers type RJA 4-2.~~IV~~2-A~~5~~.
  - All wood-framed vertical walls [RJA 4.3.1-~~9~~-A2 walls] have a 25 percent~~%~~ framing fraction, i.e., 75 percent~~%~~ of the wall is insulation.

- Window wall ratio = .10 for opaque envelope tests [WWR = 0.10]
- Glazing performance equal to prescriptive requirements

- Lighting wattage at 1.50 watts per square foot
- Package single zone system (gas furnace) without economizers or package variable air volume system with economizer cycle [Standard DOE 2.1E Economizer] and fixed temperature integrated 75 degrees Fahrenheit economizer limit temperature - [ECONO-LIMIT-T = 75.0]

5.2.2.1 Opaque Exterior Envelope - A2 Series (7 tests)

These tests use the default B prototype building geometry and zone configuration. Run tests using ~~wall assemblies~~Reference Joint Appendix JA4 assembly tables and cell references:~~IV~~RJA ~~4~~ 4.3.1~~-9~~-A2, ~~IV~~RJA ~~4-~~.3.3~~11~~-A2, ~~IV~~RJA ~~4-13~~.3.6-D5+~~IV~~4.3.13~~-19~~-A1, and ~~IV~~RJA ~~4~~.3.6~~13~~-B2+~~IV~~4.3.13~~-19~~-F7 for north, east, south and west walls respectively and roof assembly ~~IV~~RJA ~~4~~.2.3~~-3~~-A5. The framing percentage used for wood frame walls, e.g., wall type from table~~IV~~RJA ~~4~~.3.14~~-9~~-A2, is 25 percent~~%~~. For Tests A21 and A25 use package single zone [PSZ] HVAC equipment in climate zones 13 and 03 respectively. For tests A22, A23, A24 use a package variable air volume [PVAV] system in climate zones 13, 06, and 16 respectively. Test again (A26 and A27) using wall assemblies ~~IV~~RJA4.3.1~~-4-9~~-A3, ~~IV~~RJA ~~4~~.3.3~~4-11~~-B4, ~~IV~~RJA ~~4~~.3.6~~4-13~~-D5+~~IV~~4~~4~~.3.13~~-19~~-F7, and ~~IV~~RJA4.3.6~~-4-13~~-B2+~~IV~~4~~-19~~3.3.13-D7 for north, east, south and west walls respectively and roof assembly ~~IV~~RJA4.2.3~~-4-3~~-H5. For test A26 use a package single zone [PSZ] HVAC system in climate zone 13 and for test A27 use a package variable air volume [PVAV] system in climate zone 16.

Table N5-3 – A2 Test Series Summary

Test Run	HVAC System	North Wall	East Wall	South Wall	West Wall	Roof
A21B13	PSZ	~~IV~~RJA ~~4-9~~.3.1-A2	~~IV~~RJA ~~4~~-.3.3~~11~~-A2	~~IV~~RJA ~~4-13~~.3.6-D5+~~IV~~4.~~-19~~3.13-A1	~~IV~~RJA ~~4~~.3.6~~-13~~-B2+~~IV~~4.-3.13~~19~~-F7	~~IV~~RJA ~~4~~.2.3~~-23~~-A5
A22B13	PVAV	~~IV~~RJA ~~4-9~~.3.1-A2	~~IV~~RJA ~~4~~-.-3.3~~11~~-A2	~~IV~~RJA ~~4-13~~.3.6-D5+~~IV~~4.3.13~~-19~~-A1	~~IV~~RJA ~~4~~.3.6~~-13~~-B2+~~IV~~4.3.13~~-19~~-F7	~~IV~~RJA ~~4~~.2.3~~-23~~-A5
A23B06	PVAV	~~IV~~RJA ~~4-~~-3.1~~9~~-A2	~~IV~~RJA ~~4-11~~.3.3-A2	~~IV~~RJA ~~4-13~~.3.6-D5+~~IV~~4.3.13~~-19~~-A1	~~IV~~RJA ~~4-13~~.3.6-B2+~~IV~~4.3.13~~-19~~-F7	~~IV~~RJA ~~4~~.2.3~~-23~~-A5
A24B16	PVAV	~~IV~~RJA ~~4-~~.3.1~~9~~-A2	~~IV~~RJA ~~4-11~~.3.3-A2	~~IV~~RJA ~~4~~.3.6~~4-13~~-D5+~~IV~~4.3.13~~-19~~-A1	~~IV~~RJA ~~4-13~~.3.6-B2+~~IV~~4.3.13~~-19~~-F7	~~IV~~RJA ~~4~~.2.3~~-23~~-A5
A25B03	PSZ	~~IV~~RJA ~~4-~~.3.1~~9~~-A2	~~IV~~RJA ~~4-11~~.3.3-A2	~~IV~~RJA ~~4-13~~.3.6-D5+~~IV~~4.3.13~~-19~~-A1	~~IV~~RJA ~~4-13~~.3.6-B2+~~IV~~4.3.13~~-19~~-F7	~~IV~~RJA ~~4~~.2.3~~-23~~-A5
A26B13	PSZ	~~IV~~RJA ~~4-~~.3.1~~9~~-A3	~~IV~~RJA ~~4-11~~.3.3-B4	~~IV~~RJA ~~4-13~~.3.6-D5+~~IV~~4.3.13~~-19~~-F7	~~IV~~RJA ~~4-13~~.3.6-B2+~~IV~~4.3.13~~-19~~-D7	~~IV~~RJA ~~4-~~.2.3~~23~~-H5
A27B16	PVAV	~~IV~~RJA ~~4-~~.3.1~~9~~-A3	~~IV~~RJA ~~4-11~~.3.3-B4	~~IV~~RJA ~~4~~.3.6 ~~-13~~-D5+~~IV~~4.3.13~~-19~~-F7	~~IV~~RJA ~~4-13~~.3.6-B2+~~IV~~4.3.13~~-19~~-D7	~~IV~~RJA ~~4-~~.2.3~~23~~-H5

5.2.3 Envelope Glazing Tests

The envelope glazing tests are to check whether the ~~ACM~~compliance software applicant inserts the correct vertical glazing types and areas into the standard design as a function of proposed design glazing orientation, area, occupancy and display perimeter length. As for the opaque envelope tests, the eight (8) zone B prototype building is used to enhance the sensitivity of the tests for envelope measures.

The prototypes for these tests have the following characteristics:

- Prototype building B, and if not otherwise specified.
- Envelope
  - ~~Same~~ W~~w~~all and R~~r~~oof assemblies:
    - North Wall - ~~as for Section 5.2.2 base case file, namely, wall assemblies IV~~RJA 4-.3.1~~9~~-A2

- East Wall - ~~,~~ ~~IV~~RJA 4-.3.3~~11~~-A2~~,~~
- South Wall - ~~IV~~RJA 4-.3.6~~13~~-D5+~~IV~~4-~~19~~.3.13-A1~~,~~
- West Wall - ~~and IV~~RJA 4-.3.6 ~~13~~-B2+~~IV~~4-.3.13~~19~~-F7

~~6.~~• ~~for north, east, south and west walls respectively and r~~Roof A~~a~~ssembly ~~IV~~RJA 4-2.2~~3~~-A5.

- Window wall ratio default of 0.35 [WWR=0.35]
- ~~3~~5.5 inch concrete slab-on-grade floor
- Package variable air volume system with economizer cycle and 75 degree Fahrenheit economizer limit temperature - [ECONO-LIMIT-T = 75.0]
- Retail store occupancy with no lighting plans, hence lighting is at 1.50 watts per square foot.

Tests B31 and B32 use prototype building D to test skylight and display perimeter custom budget generation and to simultaneously test ~~ACM~~compliance software overhang modeling.

The prototype has the following characteristics:

- Prototype building D
- Retail (85 percent~~%~~) and storage (15 percent~~%~~) occupancies hence lighting at 2.00 watts per square foot for the retail and 0.6 watts per square foot for the commercial storage portion at the back.
- ~~3~~5.5 inch concrete slab-on-grade floor [U-F CONS=SLABC]
- At zero building azimuth the long axis of the building zones run due east to west.
- All "exterior" vertical walls of the two unconditioned zones are 2x4 steel-framed walls with framing 16" o.c. and R-11 insulation between framing members. These walls have stucco and plywood on the exterior and sheetrock on the interior [CONS = ~~IV~~RJA 4~~11~~.3.3-A2].
- The vertical walls between the conditioned zone and the two unconditioned zones are 2x4 steel-framed walls with framing 16" o.c. and R-11 insulation between framing members. These walls have sheetrock on both sides [CONS = INTWALL].
- The southern exterior vertical wall of the conditioned zone is a steel-framed ~~IV~~RJA 4~~11~~.3.3-A2 [METAL-WALL] wall and the northern wall is a massive [HEAVY-WALL] ~~IV~~RJA 4~~13~~.3.6-D5+~~IV~~4~~19~~.3.13-A1 wall.
- Wood framed roof - framing materials and layers type ~~RF1C~~RJA 4.2.2-A5.
- For the B31 and B32 test runs the window wall ratio is .50 for both exterior walls of the conditioned space [WWR = 0.50]. These windows start on the ground.
- The B31 and B32 test runs both include double pane skylights.
- Clear single pane glass for all glass ~~with 9% aluminum framing with thermal break~~, SHGC=~~0.828~~~~0~~0.715, ~~G-C=1.62~~U-Factor 0.992~~1.19~~, and VT=0.754~~0.88~~.
- Package single zone system with economizer cycle and compressor lockout (fixed temperature non-integrated economizer [ECONO-LIMIT-T = ~~75~~70]

5.2.3.1 Vary Window Wall Ratio - B1 Series (5 tests)

These tests exercise the automatic determination of standard design window wall ratios. These tests are performed using building B. The first three (B11, B12, and B13) are modeled in climate zone 13 and the last two in climate zones 06 and 16 respectively. Wall types ~~IV~~RJA 4-~~11~~.3.3-A2, ~~IV~~RJA 4-~~9~~.3.1-A2, ~~IV~~RJA 4-~~13~~.3.6-B2+~~IV~~4-~~19~~.3.13-F7, and ~~IV~~RJA 4-~~13~~.3.6-D5+~~IV~~4-~~19~~.3.13-A1 are used as in test series A2. All glazing performance characteristics shall be consistent with the prescriptive standards and no overhangs or side fins will be simulated. The glass will be a continuous band of uniform height around the entire building. Window wall ratios are set at 0.35, 0.40, and 0.45 respectively. The building with a WWR of 0.45 are also simulated in climate zones 06 and 16 for tests B14 and B15. When the window wall ratio is tested at 0.45 [WWR = 0.45] the

proposed building is tested with ~~clear low emissivity~~ fixed, tinted, dual pane glass metal framing ~~with 9% aluminum framing~~ with thermal break, SHGC=0.446~~58~~~~57~~, ~~G-C=0.68~~U-Factor 0.563~~0.55~~ (G-C=0.644)~~, and VT=0.72~~.

- ~~B11B13 – B13B13 HVAC System (See NACM Appendix Table NB-19)[17]~~
  - ~~ACLP040L (See NACM Appendix Table NB-7)~~
    - ~~Heating: Capacity = 420,000 BTU/h, AFUE = 80~~
    - ~~Cooling Capacity = 467,000 BTU/h, EER = 8.50~~
    - ~~CFM = 14,000, BHP = 2.12~~
    - ~~Economizer = Yes, fixed temperature integrated 75 degree Fahrenheit limit temperature [ECONO LIMIT T = 75.0]~~
- ~~B14B06, B15B16 HVAC System (See Appendix NF-35)~~
  - ~~ACLP040H (See NACM Appendix Table NB-7)~~
    - ~~Heating: Capacity = 480,000 BTU/h, AFUE = 84~~
    - ~~Cooling Capacity = 476,000 BTU/h, EER = 9.00~~

Tests: B11B13, B12B13, B13B13, B14B06, and B15B16.

5.2.3.2 Vary Glazing Types With An Overhang - B2 Series (4 tests)

These tests examine the ~~ACM~~compliance software's sensitivity to the energy tradeoffs between extra glazing and overhangs. The first three tests are performed using building B in climate zone 12 with the building rotated 15 degrees to the east in azimuth. The last test is performed in climate zone 03. A ~~-~~retail occupancy is modeled. Overhangs, six ft deep [OH-D=6], 60 ft wide [OH-W=60], and 0.1 ft above the top of the glass [OH-B=0.1] and no extension [OH-A=0] are modeled on the windows. However, no side fins or other building shading will be simulated. The glass will consist of two continuous bands with their bottom edges 2.5 ft from the floor and a height equivalent to a window wall ratio of 0.42 [WWR =0.42] around the entire building. The first three runs will use the three different glass types indicated below for windows on all walls including the north wall. Fixed, bronze~~tinted~~, dual pane glass metal framing with thermal break, SHGC=0.446~~0.57~~, U-Factor 0.563 (G-C = 0.644)~~0.55~~, and VT=0.403~~0.72~~~~Clear low emissive dual pane glass [9% aluminum framing with thermal break, SHGC=0.58, G-C=0.68, and VT=0.72]~~ will also be simulated in climate zone 03.

Glass descriptions[18]

1. CLR = GLASS-TYPE S-C=0.822~~.95~~ PANES=1 ~~G-C=1.62~~G-C=1.273~~1.02~~ V-T=0.754~~.88~~
2. RFL67~~RFL45~~ = GLASS-TYPE S-C=0.67~~.45~~ PANES=1 ~~G-C=1.62~~G-C=1.441~~1.02~~ V-T=0.474~~.22~~
3. CLRLOWE =GLASS-TYPE S-C=0.42~~.66~~ PANES=2 G-C=0.510~~0.68~~ V-T=0.623~~.72~~

Tests: B21B12, B22B12, B23B12, and B24B03

5.2.3.3 Display Perimeter & Skylight Tests - B3 Series (2 tests)

These tests examine the ~~ACM~~compliance software's sensitivity to variations in both display perimeter and skylights. These tests are performed using prototype D in climate zone 12. A 4-ft deep, [OH-D=4], 20 ft wide [OH-W=20] overhang, 2 ft above the window [OH-B=2] with no extension [OH-A=0] will be modeled. The building will be rotated 165 degrees clockwise or to the east [BUILDING LOCATION AZ = 165] facing the glazed wall 15 degrees to the east of due South. No side fins or other building shading will be simulated. The glass will be a 6-ft high panel of clear ~~single~~ dual pane glass [~~9% aluminum~~metal ~~framing with~~framing with ~~thermal break~~, SHGC=0.618~~0.82~~~~73~~, ~~G-C=1.62~~G-C=0.644~~1.02~~U-Factor 0.563~~0.74~~, and VT=0.671~~0.880~~] on both exterior end walls with its bottom edge at floor height. The display perimeter option will be selected with a display perimeter of 40 ft for the D prototype building. [WWR = 0.500 for six foot high glass.] Test B31 will have 5 percent~~%~~ of the roof area in double pane transparent skylights [9 percent~~%~~ aluminum framing with

thermal break, SHGC=0.~~44~~69, ~~G-C=1.02~~U-Factor 1.11, and VT=0.80] and test B32 will have 10% of the roof area in double pane translucent skylights [~~9% aluminum~~ metal framing with thermal break, SHGC=0.~~70~~57, ~~G-C=1.02~~U-Factor 1.11, and VT=0.61].

Tests: B31D12 and B32D12

5.2.4 Occupancy Tests

The occupancy tests check to see if the ~~ACM~~compliance software applicant inserts the correct schedules, envelope performance requirements, fixed values for internal loads and ventilation rates as a function of the occupancy type. Window wall ratio has been lowered to 0.20 for building prototype A and 0.30 in prototype B to increase the sensitivity of the tests to the choice of occupancy.

The prototypes for these tests all have the following characteristics:

- Prototype building A
- Specified occupancy mixes except lighting at 0.05 watts per square foot higher than allowed by Table N2-2 with lighting plans submitted.
- Wood framed roof - framing materials and layers type ~~RF1B~~RJA 4.2.1-~~2~~-A2
- Suspended wood floor - framing materials and layers per Joint Appendix JA4 ~~IV~~, floor type ~~IV~~RJA 4-241-A1
- Package single zone system with economizer cycle and 70~~5~~ degree Fahrenheit limit temperature
- [ECONO-LIMIT-T = ~~75~~70.0]
- Window wall ratio = 0.20 [WWR = 0.20]
- Glazing meets prescriptive standards for CZ13

Tests will also be run for a mixed office, retail, restaurant, and heated-only warehouse occupancies for prototype building B and a second mixed occupancy test will be done using prototype C as a "prototype" high-rise hotel.

- Prototype buildings B (ten zone version)
- Modeled occupancy mixes except lighting at 0.02 watts per square foot lower than allowed by Table N2-2 with lighting plans submitted.
- ~~3~~5.5 inch concrete slab-on-grade floor [U-F CONS=SLABC]
- Wood framed roof - framing materials and layers type ~~RF1C~~RJA 4.2.1-A5
- Two (Interior Zones and Perimeter Zones) Packaged Variable Air Volume Systems with Electric Reheat and Economizer Cycle and ~~75~~ 70 degree Fahrenheit economizer limit temperature for Prototype B. [ECONO-LIMIT-T = ~~75~~70.0]
- Window wall ratio = 0.~~30~~ 35 [WWR = 0.35]
- Glazing performance equal to prescriptive requirements

Prototype building C is described in detail below by the reference program input files. The mixed-occupancy high-rise hotel has a hotel lobby, office, and three retail zones on the first floor; hotel guest rooms on the middle floors; and three hotel function area zones, a kitchen, and dining zone on the top floor. In addition to the primary occupancy, each perimeter HVAC zone has 12 percent~~%~~ of its area as corridor, restroom, and support occupancy. The interior or core HVAC zones have 20 percent~~%~~ of their area as corridor, restroom, and support occupancy to account for elevators and electrical and mechanical chases.

- Prototype building C
- Lighting is set to the prescriptive requirement for each occupancy task/area per Table N2-2.
- Concrete spandrel panel walls ~~[MAT = (CC22,IV11-A3,GP02)]~~RJA 4.3.8-D4

- Raised concrete floor [RJA 4.4.6A4]
- Built-up roof [RJA 4-2-A5]
- ~~for Floor1 IV25-A4~~
- ~~for Floor2~~
- ~~where~~
- ~~[CEL 2.5 = MAT TH=.2083 COND=.0333 DENS=5 S-H=.32]~~
- ~~Plywood deck, rigid insulation w/built-up roof exterior roof [MAT = (BR01,ISO-3.0,PW04)~~
- ~~where~~
- ~~ISO-3.0=MAT TH=.25 COND=.01417 DENS=1.5 S-H=.38]~~
- ~~Interior Roof [MAT = (CC04,CP01)~~
- Variable air volume system with hot water reheat and economizer cycle and 75 degree Fahrenheit economizer limit temperature serving non-hotel room occupancies

  [ECONO-LIMIT-T = 75.0]
- Four pipe fan coil system serving all hotel rooms
- Window wall ratio = 0.35 [WWR = 0.35]
- Glazing performance equal to prescriptive requirements for climate zone 13. Double pane clear windows ~~[9% aluminum~~metal framing with thermal break, SHGC=0.618~~0.6977~~, ~~G-C=0.838~~U-Factor 0.563~~0.55~~, and VT=0.671~~0.80~~] are used for north-facing glazing and non-north-facing guestroom glazing. Double pane bronze windows [~~9% aluminum~~metal framing with thermal break, SHGC=0.618~~0.50~~, ~~G-C=0.838~~U-Factor 0.563 (G-C= 0.644)~~0.55~~, and VT=0.671~~0.47~~] are used for non-north-facing glazing for all other occupancies.

5.2.4.1 Single Occupancy Tests - C1 Series (5 tests)

These tests will be performed using the Building A in climate zone 10 for the 5 occupancy mixes listed below. Sub-occupancy assumptions are given in Table N2-3 of this manual:

C11A10	Grocery	82% Grocery Sales	8% Storage	6% Support	4% Office
C12A10	Restaurant	65% Dining Area	30% Kitchen	5% Support	
C13A10	Theater	70% Theater (Perf)	20% Lobby	5% Support	5% Office
C14A10	Clinic	50% Medical-Clinic	25% Office	25% Support	
C15A10	All "Other"	100% Other			

Tests: C11A10, C12A10, C13A10, C14A10, and C15A10

5.2.4.2 Mixed Occupancy Tests - C2 Series (2 tests)

a) This test will be performed using the ten zone version of Prototype Building B in climate zone 10 with the first story north and south zones retail, first story east and west zones heated-only warehouses and the first floor interior zone and all second story zones are office occupancies.

   Packaged single zone [PSZ] gas/electric HVAC systems are modeled in the heated-only warehouse zones in lieu of the packaged variable air volume [PVAV] system.

b) This test will be performed using the Prototype Building C in climate zone 16 with the first story having retail occupancies in all zones except for the west zone which is a hotel lobby and the south zone which is an office, four middle stories of hotel guest rooms with five zones per floor, and a top floor with hotel function zones for the north, east, and west zones, a kitchen for the interior zone and dining occupancy in the south zone. A four pipe fan coil system using continuous fan operation shall serve the guest rooms.

Compliance software with the capability of intermittent fan operation shall also provide results for this test using intermittent fan operation for the four-pipe fan coil system for both the proposed and standard design.

Tests: C21B10 and C22C16

5.2.5 Lighting Tests - D1 Series (4 tests)

The lighting tests check whether the ~~ACM~~compliance software applicant inserts the correct lighting levels, per zone, into the standard design.

The prototype has the following characteristics:

- Prototype building D
- Retail area occupancy with lighting plans
- ~~3~~5.5 inch concrete slab-on-grade floor [U-F CONS=SLABC]
- Wood framed roof - framing materials and layers type ~~RF1C~~RJA 4.2.2-A5
- Window wall ratio of 0.30 [WWR = 0.30]
- Clear single pane glass ~~for all glass with 9% aluminum~~ metal framing ~~with thermal break~~, SHGC=0.715~~0.8283~~, ~~G-C=1.62~~(G-C=1.273) ~~1.02~~U-Factor 0.992~~1.19~~, and VT=0.754~~0.88~~.
- Package single zone system with economizer cycle and compressor lockout (non-integrated economizer [ECONO-LIMIT-T = ~~75~~70]

These tests are performed using building D in climate zones 12 (Sacramento) and 07 (San Diego) with two different lighting levels, 1.50 watts per square foot and 1.70 watts per square foot.

Tests: D11D12, D12D12, D13D07, and D14D07

5.2.6 Ventilation Tests - E1 Series (6 tests)

The ventilation tests check whether the ~~ACM~~compliance software applicant inserts the correct tailored ventilation rates, per zone, into the standard design. These tests are performed using Building D in climate zone 16 with three different combinations of tailored ventilation rates. Repeat these tests in climate zone 14.

The prototype has the following characteristics:

- One zone industrial and commercial storage occupancy with lighting plans showing 0.8 watts per square foot of lighting
- ~~3~~5.5 inch slab on grade floor
- Wood framed roof - framing materials and layers [Roof Type ~~RF1C~~RJA 4.2.2-A5]
- Window wall ratio of 0.10
- Clear double pane glazing ~~on exterior walls with 9% aluminum~~metal framing with thermal break, SHGC=0.618~~0.7769~~, ~~G-C=0.838~~U-Factor = 0.563~~0.55~~, and VT=0.671~~0.80~~.
- Package single zone system with no economizer

First, standard outside air per person [OA-CFM/PER] rates are used based on occupancy assumptions in Table N2-2 or N2-3. Next outside air per person [OA-CFM/PER] rates are increased by a factor of 1.5 as a tailored ventilation entry. Finally, outside air per person [OA-CFM/PER] rates are increased by a factor of three as a tailored ventilation entry.

Tests: E11D16, E12D16, E13D16, E14D14, E15D14, and E16D14

5.2.7 Process Loads Tests - E2 Series (6 tests)

The process loads tests check the energy budget effects of zonal process (tailored) equipment levels and microclimate sizing in a proposed building design. These tests are performed using prototype building B with conditioned interior zones in climate zone 16 (Tahoe City) with three different extra process loads of 0.50, 1.00, and 2.00 watts per square foot of process heat scheduled as equipment. Repeat these tests in climate zone 12 (Davis).

The prototype has the following characteristics:

- Prototype building B including 30'x30' interior zones
- Office occupancy
- ~~3~~5.5 inch concrete slab-on-grade floor [U-F CONS=SLABC]
- Wood framed roof - framing materials and layers type ~~IV~~RJA 4~~2~~.2.2-A5
- Package variable air volume system with integrated economizer cycle and ~~75~~ 70 degree Fahrenheit economizer limit temperature - [ECONO-LIMIT-T = ~~75~~70.0]
- Window wall ratio = 0.30 [WWR = 0.30]
- Single pane reflective glass with metal framing ~~solar heat gain coefficient of 0.40 [9% aluminum framing with thermal break,~~ SHGC = 0.579~~0.40~~, U-Factor = 1.091 (G-C=1.441)~~1.19G-C=1.62~~, and VT=0.474~~0.22~~] everywhere.
- Lighting wattage at 1.20 watts per square foot

Tests: E21B16, E22B16, E23B16, E24B12, E25B12, and E26B12

5.2.8 HVAC System Tests - F1 Series (5 tests)

The HVAC system tests check the ~~ACM~~compliance software's sensitivity to variations in HVAC system type and the selection of comparative systems for the standard design as a function of specific city location within climate zone, occupancy, square footage and proposed HVAC system type. Test F15A16 is a heated-only warehouse with electric resistance heating. The systems to be used for establishing custom budgets~~,~~ are described in Chapter 2.

Tests 1 and 2 (F11A07 & F12A13):

- Prototype building A
- Medical office/clinic occupancy
- Window wall ratio of 40 percent~~%~~ [WWR = 0.40]
- Heat Pump System
- F11A07 modeled in climate zone 07 (San Diego)
- F12A13 modeled in climate zone 13 (Visalia)

Tests 3 and 4 (F13B12 & F14B12):

- Prototype building B - 8 zone version
- Retail occupancy
- Window wall ratio of 35 percent~~%~~ [WWR = 0.35]
- PVAV with electric reheat and no hot water coils or boilers
- F13B12 modeled in climate zone 12 (Sacramento)
- F14B12 modeled in climate zone 12 (Crockett)

Test 5: (F15A01)

- Prototype building A
- Heated only warehouse occupancy - gas-fired unit heater
- Modeled with clear, double pane, ~~low emissivity glass, 9% aluminum~~metal framing with thermal break, SHGC=0.619~~0.5869~~, ~~G-C=0.68~~U-Factor = 0.563~~0.55~~, and VT=0.671~~0.72~~.
- Window wall ratio of 35 percent~~%~~ [WWR = 0.35]
- Electric resistance heating - No cooling installed
- F15A01 modeled in climate zone 01 (Eureka)

Table N5-4 – F1 Test Series Summary

Test Run	HVAC System	Location	WWR	Occupancy
F11A07	Heat Pump	San Diego	0.40	Medical
F12A13	Heat Pump	Visalia	0.40	Medical
F13B12	PVAV with electric reheat	Sacramento	0.35	Retail
F14B12	PVAV with electric reheat	Crockett	0.35	Retail
F15A01	Electric resis. heating only	Eureka	0.35	Warehouse

5.2.9 System Sizing Tests - G1 Series (6 tests)

The system sizing tests check whether the ~~ACM~~compliance software applicant calculates and simulates the correct capacities for both the proposed and standard design systems as a function of the input HVAC system capacities.

These tests are divided among undersized systems, oversized systems and combinations of oversized and undersized system components (e.g. oversized cooling and undersized zone reheating capacities). For the purposes of these tests OVERSIZED means 100 percent over estimated load and UNDERSIZED means 50 percent of the estimated load.

The system sizing tests will be performed in climate zones 3, 11, and 16. Tests 1, 2,3 & 4 will be performed using building prototype A in climate zone 11 and tests 5 and 6 using the ten zone building prototype B in climate zones 03 and 16 respectively. Tests 5 and 6 will be performed using the ten HVAC zone version of prototype building B. Systems will be both undersized by 50 percent~~%~~ (tests 2 & 4) and oversized by 100 percent~~%~~ (tests 1 & 3.) Tests 5 and 6 have both undersized and oversized systems and components (boilers) serving different zones.

Tests 1 and 2 (G11A11 & G12A11):

- Prototype building A
- Medical office/clinic occupancy
- Window wall ratio of 40 percent~~%~~ [WWR = 0.40]
- Oversized (G11) and undersized (G12) PSZ - package gas/electric - system (gas furnace and DX cooling)
- Climate zone 11 (Red Bluff).
- No economizer

Tests 3 and 4 (G13A11 & G14A11):

- Prototype building A
- Medical office/clinic occupancy
- Window wall ratio of 40 percent~~%~~ [WWR = 0.40]

- Oversized (G13) and undersized (G14) heat pump system
- Climate zone 11 (Red Bluff).
- No economizer

Tests 5 and 6 (G15B03 & G16B16):

- Prototype building B - 10 zone version
- Office occupancy
- Window wall ratio of 35 percent~~%~~ [WWR = 0.35]
- Integrated economizers with 75 degree dry-bulb lockout
- For G15 - oversized boiler, undersized PVAV with electric reheat for exterior zones, oversized PVAV for interior zones
- For G15 climate zone 03 (San Francisco)
- For G16 - undersized boiler, oversized PVAV with electric reheat for exterior zones, undersized PVAV for interior zones
- For G16 - climate zone 16 (Tahoe City)

5.2.10 HVAC Distribution Efficiency Tests

~~ACMc~~Compliance software duct efficiency calculations shall be completed based on Appendix ~~NG~~ RNA5 for the cases shown in Appendix C~~NH~~.

5.3 Optional Capabilities Tests

~~ACMc~~Compliance software~~s~~ may also model other optional capabilities or have optional compliance capabilities for additions and alterations.

The first series of optional tests are special tests to test certain compliance options - partial compliance and modeling of an addition and an existing building with alterations. In addition to the test criteria for the energy results, compliance forms shall conform to the requirements for these special compliance options for the ~~ACM~~compliance software to be approved.

The main body of optional capabilities tests deal with additional HVAC systems and plant capabilities that can be modeled by the DOE 2.1 (especially DOE 2.1E) computer program. These tests and the reference comparison method for these tests conform to the features and rules specified in Chapters 2 and 3 of this manual unless specifically noted otherwise.

5.3.1 OC Test Series - Compliance Options

Test OC1A09: Building prototype A - climate zone 09 - UCLA

Combined compliance for an altered existing building with a non-complying addition. Occupancy is an existing restaurant in a prototype A building. A new solarium is submitted as an addition to the restaurant. The solarium addition is 20 ft deep by 30 ft wide and is 12 ft high adjacent to the wall of the existing building descends to 8 ft at the outer glass wall of the addition. The addition has been added onto the eastern 30 ft wide end of the A prototype building and that eastern wall and its glazing is removed with the construction of the addition. The vertical walls of the addition have 2.5-ft knee walls with the rest of the walls consisting entirely of high performance glass:

- Knee walls - insulated spandrel panels

~~SPANDREL-R10 assembly~~RJA 4.3.8-D1

- Sloped roof - insulated spandrel panels

  ~~SPANDREL-R15 assembly~~RJA 4.3.8-E1

- Vertical glass walls

  ~~GR4SC26 assembly [d~~Dual pane glass, 9 percent~~%~~ aluminum framing with thermal break, SHGC=0.318~~0.26~~, ~~G-C=0.2629~~U-Factor = 0.306~~0.30~~, and VT=0.574~~0.10~~]

- Sloped glazing in roof

  GR4SC18 assembly [dual pane glass, 9 percent~~%~~ aluminum framing with thermal break, SHGC=0.18, U-Factor = 0.30~~G-C=0.2629~~, and VT=0.08]

There is NO roof overhang extending beyond the addition's vertical walls. The original restaurant lighting of 2.00 watts per square foot has been altered to 1.60 watts per square foot to compensate for the extra glass in the solarium addition. The 30-ft wide eastern wall is removed to open the existing building to the solarium addition. The remainder of the A building prototype has exactly the same characteristics, including non-lighting occupancy assumptions, used in the proposed building for test C12A10 and is not altered for compliance. To be approved for the capability of partial compliance all ~~ACM~~compliance software output and reporting requirements SHALL be met.

5.3.2 O1 Test Series - Fan Powered VAV Boxes

These tests use the ten zone version of the B building prototype with the same features used (except as noted) in test B11B13. All rules applicable to System #4 (Built-up VAV) described in Section 2.5 Required Systems and Plant Capabilities also apply to fan-powered VAV boxes or power induction units [PIU]. In particular, the rules used to determine a standard HVAC system are the rules for System #4.

Test ~~O11B13~~O11B02: Building prototype B - climate zone 02 - Napa

Central VAV with hot water reheat. Each perimeter zone has a 600 cfm parallel fan powered VAV box. The reference method does not use the [ZONE-FAN-CFM] input, but does set [TERMINAL-TYPE = PARALLEL-PIU], [ZONE-FAN-KW is set greater than or equal to 0.00033], the [ZONE-FAN-T-SCH] is set 1 ^{o}F above heating setpoints, [MIN-CFM-RATIO = 0.3], and ~~ACM~~compliance software input for the [ZONE-FAN-RATIO] or its equivalent is restricted to the range of 0.4 to 1.00. The ~~ACM~~compliance software shall automatically determine or the ~~ACM~~compliance software user shall enter an [INDUCED-AIR-ZONE] which is different than the zone served. For the reference program and method, the [INDUCED-AIR-ZONE] shall be the U-name (user name) of another zone.

Test ~~O12B13~~O12B02: Building prototype B - climate zone 02 - Napa

Central VAV with hot water reheat. Each perimeter zone has a 600 cfm series fan powered VAV Box. The reference method does not use the [ZONE-FAN-CFM] input, but does set [TERMINAL-TYPE = SERIES-PIU], [ZONE-FAN-KW is set greater than or equal to 0.00033], the [ZONE-FAN-T-SCH] is set 1 ^{o}F above heating setpoints, [MIN-CFM-RATIO = 0.3], and ~~ACM~~compliance software input for the [ZONE-FAN-RATIO] or its equivalent is restricted to the range of 0.4 to 1.00. The ~~ACM~~compliance software shall automatically determine or the ~~ACM~~compliance software user shall enter an [INDUCED-AIR-ZONE] which is different than the zone served. For the reference program and method, the [INDUCED-AIR-ZONE] shall be the U-name (user name) of another zone.

5.3.3 O2 Test Series - Supply/Return Fan Options

This series tests various fan options for central VAV system fans. These tests use the ten zone version of the B building prototype with the same features used (except as noted) in test B11B13. All runs have a central VAV HAVC system with a gas-fired boiler to supply hot water reheat.

Test O21B13: Building prototype B - climate zone 13 - Fresno

The supply fan uses an air foil fan with inlet vane control to control fan volume. The fan part-load curve is taken from the Commission's *DOE-2 Compliance Supplement*.

Test O22B13: Building prototype B - climate zone 13 - Fresno

The supply fan uses an air foil fan with discharge damper control to control fan volume. The fan part-load curve is taken from the Commission's *DOE-2 Compliance Supplement*.

Test O23B13: Building prototype B - climate zone 13 - Fresno

The supply fan uses an forward curve fan with inlet vane control to control fan volume. The fan part-load curve is taken from the Commission's *DOE-2 Compliance Supplement*.

Test O24B13: Building prototype B - climate zone 13 - Fresno

The supply fan uses a vane axial fan control to control fan volume. The fan part-load curve is taken from the Commission's *DOE-2 Compliance Supplement*.

5.3.4 O3 Test Series - Special Economizer Options

This series tests various economizer options. These tests use the A building prototype with the same features used (except as noted) in Test C11A10. All runs have a packaged single zone HVAC system with a gas-fired furnace and electric DX cooling. The building uses a grocery occupancy mix contained within a single (one thermostat) HVAC zone.

Proposed plans specify the sub-occupancies within the single HVAC zone with lighting watts per square foot:

Subzone Space Occupancy	Percentage of Area	Proposed Lighting
Grocery Sales Area	82%	1.50
Grocery Storage (Commercial Storage)	8%	0.80
Support/Corridors	6%	0.80
Office	4%	1.80

Test O31A12: Building prototype A - climate zone 12 - Fairfield

The HVAC system is equipped a fixed enthalpy integrated economizer control for more efficient cooling. The DOE 2.1E economizer function is used with [OA-CONTROL = TEMP], [ECONO-LIMIT-T = 75], [ENTHALPY-LIMIT = 25.0 Btu/lb], and [ECONO-LOCKOUT = YES].

Test O32A12: Building prototype A - climate zone 12 - Fairfield

The HVAC system is equipped a fixed enthalpy non-integrated economizer control for more efficient cooling. The DOE 2.1E economizer function is used with [ENTHALPY-LIMIT = 25.0 Btu/lb] and [ECONO-LOCKOUT = NO].

Test O33A12: Building prototype A - climate zone 12 - Fairfield

The HVAC system is equipped a differential enthalpy integrated economizer control for more efficient cooling. The DOE 2.1E economizer function is used with [OA-CONTROL = ENTHALPY].

5.3.5 O4 Test Series - Special HVAC Control Option

Test O41B13: Building prototype B - climate zone 13 - Fresno

This test exercises a warmest zone cooling coil control option. This test uses the ten (10) zone version of building prototype B with the same features used (except as noted) in test B11B13.

5.3.6 O6 Test Series - Additional Chiller Options

This series tests various chiller options. These tests use the ten (10) zone B building prototype with the same features used (except as noted) in test F14B13. All runs have a central HVAC system with one of the new chiller options and a gas-fired boiler and use hot water reheat.

Test O61B12: Building prototype B - climate zone 12 - Placerville~~Roseville~~

The chiller for this test is a single stage absorption chiller modeled with an EIR = 0.004 and an HIR = 1.6.

Test O62B12: Building prototype B - climate zone 12 - Placerville~~Roseville~~

The chiller for this test is a two stage absorption chiller modeled with an EIR = 0.004 and an HIR = 1.0.

Test O63B12: Building prototype B - climate zone 12 - Placerville~~Roseville~~

The chiller for this test is a gas-fired absorption chiller modeled with an EIR = 0.0114 and an HIR = 1.0.

Test O64B12: Building prototype B - climate zone 12 - Placerville~~Roseville~~

The chiller for this test is a variable speed drive (VSD) chiller modeled with an EIR = 0.2275.

Test O65B12: Building prototype B - climate zone 12 - Placerville~~Roseville~~

The chiller for this test is a screw chiller modeled with an EIR = 0.2275.

Test O66B12: Building prototype B - climate zone 12 - Fairfield

The chiller for this test is also a screw chiller modeled with an EIR = 0.2275 in a different city in climate zone 12.

5.3.7 O7 Test Series - Additional HVAC System Options

This series tests various additional HVAC system options. These tests use the ten (10) zone B building prototype with the same features used (except as noted) in test F13B12. All runs have a central HVAC system with the same chiller as that used in test F13B12 and (where needed) a gas-fired boiler for hot water reheat.

Test O71B12: Building prototype B - climate zone 12 - Sacramento

Individual hydronic heat pumps (< 75K Btuh) are modeled for each zone. The heat pumps all have EER = 11.0 and COP = 3.86~~.5.3.8~~ O8 Test Series - Optional Shading Devices.

This test series tests the effects of optional shading devices, in particular sidefins. In this series sidefins are tested in two hot climate zones at both ends of the state to maximize differences in latitude and thus solar angles. The building is the same as that used in Test C11A10 except as noted below.

The occupancies and lighting are the same as that specified for **Test OC1~~2~~A09** and the **O3 Test Series**.

Test O81A11: Building prototype A - climate zone 11 - Red Bluff

The glazing is the same as in Test C11A10 except that there are 2-ft deep sidefins every 5 ft that are the same height as the windows.

Test O82A15: Building prototype A - climate zone 15 - Palm Springs

This test is the same as Test O81A11 except that the test is modeled in climate zone 15 - Palm Springs.

5.3.8 O9 Test Series - Evaporative Cooling Options

This test series tests direct, indirect, and direct/indirect evaporative cooling systems. Evaporative cooling is used both alone or as a precooling system. The building is the same as that used in Test C11A10 except as noted below. The occupancy type is the grocery with 12 percent~~%~~ storage space; and lighting (with lighting plans) is set at 1.65 watts per square foot for all spaces modeled.

Standard Design Assumptions. The standard HVAC system for evaporative cooling is a DOE 2.1E gas/electric packaged single zone unit [DOE 2.1E PSZ] with a fan power index 0.196 watts per cfm less than the proposed system which has additional fan capacity to move high air volumes required for evaporative cooling. The DOE 2.1E reference program characteristics for the standard system include [SUPPLY-DELTA-T = 1.815] and [SUPPLY-KW = 0.000587].

Proposed Design Assumptions. The proposed HVAC system for these O9 series tests will include the evaporative cooling system plus a backup DOE 2.1E packaged single zone [PSZ] with [SUPPLY-DELTA-T = 2.42] to account for additional heating of the air stream by additional and/or larger fans, [SUPPLY-KW = 0.000783] to account for the evaporative cooling fan. **~~ACM~~Compliance software~~s~~ may allow user entry of supplementary fan and pump power but they shall have a minimum supplementary power use (similar to the fan power index) of 0.5 watts per cfm to account for supplementary fans and pumps [EVAP-CL-KW not less than 0.0005 (DOE 2.1 Default)].** The entry for [EVAP-CL-KW] for DOE 2.1E is given:

Equation N5-1

$$[\text{EVAP} - \text{CL} - \text{KW}] = 0.746 \times \frac{(\text{EF}_{sp} + \text{EP}_{sp})}{0.85}$$

where

EF_{sp} is the nameplate horsepower of the evaporative supplementary fan(s)

EP_{sp} is the nameplate horsepower of the evaporative supplementary pump(s)

0.85 is a power factor to convert nameplate horsepower to ~~brake~~input horsepower

For the proposed design, a~~n~~ ~~ACM~~compliance software shall limit direct and indirect evaporative cooling effectiveness to the DOE 2.1E defaults as a maximum entry.

Test O91A13: Building prototype A - climate zone 13 - Fresno

A packaged single zone system is modeled with supplemental indirect evaporative cooling. This test is used to verify the proper upsizing of an undersized cooling system, as well as to ensure that the evaporative cooling is not upsized. This test is also used to verify the correct accounting of supplemental energy associated with the evaporative cooling process, and the implementation of the indirect cooling algorithms.

Test O92A11: Building prototype A - climate zone 11 - Redding

A standalone indirect/direct evaporative cooler is modeled with no supplemental air conditioning proposed. This test is used to verify the correct selection of the standard HVAC system and the ability of the ~~ACM~~compliance software to create the proper cooling system which functions with the evaporative cooling system as a supplement to mechanical cooling. This test is also used to verify the correct implementation of the indirect/direct evaporative cooling algorithms.

Test O93A12: Building prototype A - climate zone 12 - Placerville~~Roseville~~

A standalone indirect/direct evaporative cooler is modeled with no supplemental air conditioning proposed. This test is the same as Test 092A11 except modeled in a different city with a milder cooling climate where the evaporative cooler alone may be sufficient. This test is used to verify the correct selection of the standard HVAC system and the ability of the ~~ACM~~compliance software to determine the need for the proper cooling system which functions with the evaporative cooling system as a supplement to mechanical cooling and create it if needed.

Test O94A13: Building prototype A - climate zone 13 - Fresno

A standalone indirect/direct evaporative cooler is modeled with no supplemental air conditioning proposed. This test is the same as Test O~~0~~92A11 except modeled in a different city with a milder cooling climate where the evaporative cooler alone may be sufficient. This test is used to verify the correct selection of the standard HVAC system and the ability of the ~~ACM~~compliance software to determine the need for the proper cooling system which functions with the evaporative cooling system as a supplement to mechanical cooling and create it if needed.

6. Vendor Requirements

Each ~~ACM~~compliance software vendor shall meet all of the following requirements as part of the ~~ACM~~compliance software approval process and as part of an ongoing commitment to users of their particular program.

6.1 Availability to Commission

All ~~ACM~~compliance software vendors are required to submit at least one fully working program version of the ~~ACM~~compliance software to the California Energy Commission. An updated copy or access to the approved version of the ~~ACM~~compliance software shall be kept by the Commission to maintain approval for compliance use of the ~~ACM~~compliance software.

The Commission agrees not to duplicate the ~~ACM~~compliance software except for the purpose of analyzing it, for verifying building compliance with the ~~ACM~~compliance software, or to verify that only approved versions of the ~~ACM~~compliance software are used for compliance.

6.2 ~~Building Department~~Enforcement Agency Support

~~ACM~~Compliance software vendors shall provide a copy of the ~~ACM~~compliance software User's Manual and Help System to all ~~local building~~ enforcement agencies who request one in writing.

6.3 User Support~~d~~

~~ACM~~Compliance software vendors shall offer support to their users with regard to the use of the ~~ACM~~compliance software for compliance purposes. Vendors may charge a fee for user support.

6.4 Compliance Software ~~ACM~~ Vendor Demonstration

The Commission may request ~~ACM~~compliance software vendors to physically demonstrate their program's capabilities. One or more demonstrations may be requested before approval is granted.

End Notes

These notes are an explanation of the changes that have been made to the Standards. They are informational only and are not part of the Standard.

1 From Heschong Mahone Group, July 2006 Workshop, Updates to Skylighting Requirements, http://www.energy.ca.gov/title24/2008standards/documents/2006-07-12_workshop/2006-07-11_SKYLIGHTS.PDF

2 From Benya, July 2006 Workshop, Changes to Lighting Power Density Values: Bringing Certain Values in Line with Standard 90.1, http://www.energy.ca.gov/title24/2008standards/documents/2006-07-12_workshop/MEASURE_BLD_02.PDF

3 From Benya, July 2006 Workshop, Changes to Lighting Power Density Values Affected by Developments in Electronic Ballasts for Metal Halide Lighting, http://www.energy.ca.gov/title24/2008standards/documents/2006-07-12_workshop/MEASURE_BLD_01.PDF

4 From Benya, July 2006 Workshop, Changes to Lighting Power Density Values: Bringing Certain Values in Line with Standard 90.1, http://www.energy.ca.gov/title24/2008standards/documents/2006-07-12_workshop/MEASURE_BLD_02.PDF

5 From Benya, July 2006 Workshop, Changes to Lighting Power Density Values: Bringing Certain Values in Line with Standard 90.1, http://www.energy.ca.gov/title24/2008standards/documents/2006-07-12_workshop/MEASURE_BLD_02.PDF

~~6 From Heschong Mahone Group, July 2006 Workshop, Updates to Skylighting Requirements, http://www.energy.ca.gov/title24/2008standards/documents/2006-07-12_workshop/2006-07-11_SKYLIGHTS.PDF~~

7 From Hydeman, February 27, 2007 Workshop Report Single Zone VAV Systems, http://www.energy.ca.gov/title24/2008standards/documents/2007-02-26-27_workshop/2007-02-27_SINGLE_ZONE_VAV_SYSTEMS.PDF

8 From Hydeman, DDC to the Zone Level 3: Hydronic Pressure Reset, http://www.energy.ca.gov/title24/2008standards/documents/2006-07-12_workshop/2006-07-11_DDC_LEVEL3.PDF

9 From Dodd, Fault Detection and Diagnostics for Rooftop Air Conditioners, http://www.energy.ca.gov/title24/2008standards/documents/2006-02-22+23_workshop/templates/FAULT-DETEC-ROOF-AC_ENERGYSOFT_2006-02-04.PDF

10 From Dodd, Fault Detection and Diagnostics for Rooftop Air Conditioners, http://www.energy.ca.gov/title24/2008standards/documents/2006-02-22+23_workshop/templates/FAULT-DETEC-ROOF-AC_ENERGYSOFT_2006-02-04.PDF

11 From Dodd, Fault Detection and Diagnostics for Air Handling Units and VAV Boxes, http://www.energy.ca.gov/title24/2008standards/documents/2006-02-22+23_workshop/templates/FAULT-DETEC-AHU_VAV_ENERGYSOFT_2006-02-06.PDF

12 From Hydeman, DDC to the Zone Level 4: Demand Control Ventilation (DCV), http://www.energy.ca.gov/title24/2008standards/documents/2006-07-12_workshop/DDC_ZONE_MEASURE_4_DCV.PDF

13 From Dodd, Fault Detection and Diagnostics for Air Handling Units and VAV Boxes, http://www.energy.ca.gov/title24/2008standards/documents/2006-02-22+23_workshop/templates/FAULT-DETEC-AHU_VAV_ENERGYSOFT_2006-02-06.PDF

14 This capability is based on language proposed by JJ Hirsch and Associates to reflect modeling capabilities of DOE2.2.

15 This change is based on Dodd, http://www.energy.ca.gov/title24/2008standards/documents/2006-02-22+23_workshop/templates/UNDERFLOOR-AIR-DISTR_ENERGYSOFT_2006-02-02.PDF, Feb workshop, with updates by Fred Bauman and Tom Webster of UC Berkeley's Center for the Built Environment.

16 From Thermal Energy Storage Compliance Option, Staff Draft Report, Dec. 2006. CEC document 400-2006-010-SD.

17 From Dodd, Development of Recommendations to Integrate Emerging Technologies into the 2008 Nonresidential Standards, Appendix C, June 2006.

18 From Dodd, Development of Recommendations to Integrate Emerging Technologies into the 2008 Nonresidential Standards, Appendix C, June 2006.

Nonresidential ACM Appendix A – 2008

NACM Appendix A – Nonresidential Compliance Software Approval Application

CALIFORNIA ENERGY RESOURCES

CONSERVATION AND DEVELOPMENT COMMISSION

APPLICATION FOR APPROVAL OF A VENDOR-CERTIFIED ALTERNATIVE CALCULATION METHOD FOR USE IN DEMONSTRATING COMPLIANCE WITH THE NONRESIDENTIAL BUILDING ENERGY EFFICIENCY STANDARDS PER SECTION 141, TITLE 24, PART 6 OF THE CALIFORNIA CODE OF REGULATIONS

Part I: General Information

1. Organization filing application:

   Name: _____ Phone: ( )_____

   Address: _____

   _____

2. Name of person responsible for completion of this application:

   Name: _____ Phone: ( )_____

   Address: _____

   _____

3. Name, Date, and Version of the Alternative Calculation Method (ACM):

   Name: _____ Date: _____

   Version: _____

4. Has a previous version of this compliance software~~ACM~~ ever been certified?

   [ ] YES [ ] NO

5. Has this ~~ACM~~compliance software been previously submitted for approval or certification?

   [ ] YES [ ] NO

6. Has this ~~ACM~~compliance software ever been used to analyze the energy use of a building in California?

   [ ] YES [ ] NO

7. Has this ~~ACM~~compliance software ever been used to determine compiance with the energy efficiency standards of California?

   [ ] YES [ ] NO

VENDOR CERTIFICATION OF ALTERNATIVE CALCULATION METHOD

I/We,_____, certify that the alternative calculation method (ACM), herein
name(s)

designated _____, version _____ , dated _____,
name of alternative calculation method version last saved update

occupying_____bytes of memory, conforms to all of the requirements specified for ~~an~~
exact memory size in bytes

~~ACM~~Compliance software for Commission approval listed in the Nonresidential ACM Approval Manual. I/We specifically certify that this ~~ACM~~compliance software sucessfully conforms to the test criteria for each and every ~~ACM~~compliance software capability test in Chapter 4 of the Alternative Calculation Method (ACM) Approval Manual for the Nonresidential building energy efficiency standards. Moreover, I/we certify that, to the best of my/our knowledge and belief, we have found no instances where this ~~ACM~~compliance software would indicate compliance for a proposed building that the reference computer program using the the reference method would indicate fails to comply with the building energy efficiency standards.

I/We also understand that all required inputs must be available in any approvable ~~ACM~~compliance software but the ~~ACM~~compliance software is not required to model the features described by a given set of inputs. I/We stipulate that this ~~ACM~~compliance software gives the user access to the required inputs and that this ~~ACM~~compliance software automatically warns the user when building inputs use features that the ~~ACM~~compliance software cannot model with sufficient accuracy and automatically fails the proposed building by a margin sufficient to meet the test criteria for any test of that capability.

Signed: Date:

_____ _____

_____ _____

~~ACM~~Compliance Software Application Test Results for Required Capabilities Tests

TEST	PTa	STa	DTa	PTr	STr	DTr	CR1	CR2	CR3	CR4	LITEr	RECPr	CR3~~5~~	CR4~~6~~
A11A09				~~312.5~~	~~310.3~~	~~2.2~~					~~95572.9~~	~~55367.2~~		
A12A09				~~416.5~~	~~371.3~~	~~45.2~~					~~95572.9~~	~~55367.2~~		
A13A09				~~390.6~~	~~361.9~~	~~28.7~~					~~65288.2~~	~~71605.0~~		
A21B13				~~313.9~~	~~288.6~~	~~25.3~~					~~65288.2~~	~~71605.0~~		
A22B13				~~291.0~~	~~272.9~~	~~18.0~~					~~74684.1~~	~~81873.8~~		
A23B06				~~250.7~~	~~241.4~~	~~9.3~~					~~65355.6~~	~~71815.5~~		
A24B16				~~316.9~~	~~265.8~~	~~51.1~~					~~65645.0~~	~~72031.1~~		
A25B03				~~352.6~~	~~355.0~~	~~-2.4~~					~~65288.2~~	~~71605.0~~		
A26B13				~~229.7~~	~~247.2~~	~~-17.5~~					~~65355.6~~	~~71815.5~~		
A27B16				~~529.7~~	~~490.8~~	~~39.0~~					~~151254.2~~	~~71387.0~~		
B11B13				~~540.9~~	~~497.2~~	~~43.7~~					~~151254.2~~	~~71387.0~~		
B12B13				~~579.5~~	~~478.5~~	~~101.1~~					~~151254.2~~	~~71387.0~~		
B13B13				~~557.8~~	~~469.0~~	~~88.7~~					~~171620.7~~	~~80998.1~~		
B14B06				~~454.6~~	~~391.5~~	~~63.1~~					~~151131.2~~	~~71332.6~~		
B15B16				~~461.6~~	~~444.6~~	~~17.0~~					~~151219.1~~	~~71393.5~~		
B21B12				~~464.5~~	~~441.1~~	~~23.3~~					~~151219.1~~	~~71393.5~~		
B22B12				~~446.6~~	~~443.0~~	~~3.6~~					~~151219.1~~	~~71393.5~~		
B23B12				~~387.8~~	~~403.8~~	~~-16.0~~					~~150975.3~~	~~712399.9~~		

DTi = PTi - STi where i is either ‘a’ for acm or ‘r’ for reference

CR1 = DTa - (0.85 × DTr - 1) > 0 when DTa ≥ 0 CR2 = DTa –(1.15 x DTr + 1) < 0 when DTa ≥ 0 ~~CR3 = LITEa/LITEr must be ≥ 0.980 and ≤ 1.020~~

CR3~~2~~ = DTa - (1.15 × DTr - 1) > 0 when DTa < 0 CR4 = DTa - (0.85 × DTr - 1) ≤ 0 when DTa ≤ 0 ~~CR4 = RECPa/RECPr must be ≥ 0.980 and ≤ 1.020~~

CR5 = LITEa/LITEr must be > 0.980 and < 1.020 CR6 = RECPa/RECPr must be > 0.980 and < 1.020

~~ACM~~Compliance Software Application Test Results for Required Capabilities Tests

TEST	PTa	STa	DTa	PTr	STr	DTr	CR1	CR2	CR3	CR4	LITEr	RECPr	~~CR3~~CR5	CR6
B24B03				~~502.0~~	~~412.3~~	~~89.7~~					~~149190.9~~	~~67879.7~~		
B31D12				~~526.4~~	~~434.6~~	~~91.8~~					~~149190.9~~	~~67879.7~~		
B32D12				~~436.4~~	~~346.1~~	~~90.3~~					~~95396.2~~	~~55278.4~~		
C11A10				~~433.1~~	~~462.8~~	~~70.3~~					~~80936.8~~	~~47790.3~~		
C12A10				~~530.0~~	~~454.6~~	~~75.4~~					~~90499.9~~	~~32596.1~~		
C13A10				~~349.8~~	~~294.2~~	~~55.6~~					~~69356.5~~	~~71564.8~~		
C14A10				~~300.9~~	~~241.9~~	~~59.0~~					~~39660.6~~	~~60906.9~~		
C15A10				~~370.6~~	~~332.1~~	~~38.5~~					~~86341.0~~	~~63849.0~~		
C21B10				~~262.1~~	~~253.1~~	~~9.0~~					~~53096.8~~	~~32543.0~~		
C22C16				~~273.25~~	~~262.02~~	~~11.23~~								
D11D12				~~413.2~~	~~402.8~~	~~10.4~~					~~149190.9~~	~~67879.7~~		
D12D12				~~437.0~~	~~402.3~~	~~34.7~~					~~149190.9~~	~~67879.7~~		
D13D07				~~425.2~~	~~381.8~~	~~43.4~~					~~154441.6~~	~~70269.9~~		
D14D07				~~451.5~~	~~381.3~~	~~70.2~~					~~154441.6~~	~~70269.9~~		
E11D16				~~145.2~~	~~130.0~~	~~15.2~~					~~41108.8~~	~~23306.4~~		
E12D16				~~151.1~~	~~137.5~~	~~13.6~~					~~41108.8~~	~~23306.4~~		
E13D16				~~171.9~~	~~161.6~~	~~10.3~~					~~41108.8~~	~~23306.4~~		
E14D14				~~190.0~~	~~172.6~~	~~17.4~~					~~46733.2~~	~~26398.2~~		

DTi = PTi - STi where i is either 'a' for acm or 'r' for reference

CR1 = DTa - (0.85 × DTr - 1) > 0 when DTa ≥ 0

CR2 = DTa –(1.15 x DTr + 1) < 0 when DTa ≥ 0~~CR3 = LITEa/LITEr must be ≥ 0.980 and ≤ 1.020~~

~~CR2~~ CR3 = DTa - (1.15 × DTr - 1) > 0 when DTa < 0

CR4 = DTa - (0.85 × DTr - 1) ≤ 0 when DTa ≤ 0~~CR4 = RECPa/RECPr must be ≥ 0.980 and ≤ 1.020~~

CR5 = LITEa/LITEr must be > 0.980 and < 1.020

CR6 = RECPa/RECPr must be > 0.980 and < 1.020

~~ACM~~Compliance Software Application Test Results for Required Capabilities Tests

TEST	PTa	STa	DTa	PTr	STr	DTr	CR1	CR2	CR3	CR4	LITEr	RECPr	~~CR3~~CR5	~~CR4~~CR6
E15D14				~~197.1~~	~~180.7~~	~~16.4~~					~~46733.2~~	~~26398.2~~		
E16D14				~~238.4~~	~~209.8~~	~~28.6~~					~~46733.2~~	~~26398.2~~		
E21B16				~~283.0~~	~~265.6~~	~~17.4~~					~~65349.3~~	~~98663.7~~		
E22B16				~~314.7~~	~~296.5~~	~~18.2~~					~~65349.3~~	~~125520.2~~		
E23B16				~~371.3~~	~~352.6~~	~~18.7~~					~~65349.3~~	~~179217.5~~		
E24B12				~~299.7~~	~~283.2~~	~~16.5~~					~~65428.9~~	~~98535.1~~		
E25B12				~~341.9~~	~~322.0~~	~~19.8~~					~~65428.9~~	~~125356.7~~		
E26B12				~~397.8~~	~~381.7~~	~~16.1~~					~~65428.9~~	~~178984.0~~		
F11A07				~~257.3~~	~~237.9~~	~~19.5~~					~~63529.9~~	~~65655.5~~		
F12A13				~~354.6~~	~~319.8~~	~~34.8~~					~~60920.6~~	~~62926.9~~		
F13B12				~~575.5~~	~~453.8~~	~~121.7~~					~~151219.1~~	~~71393.5~~		
F14B12				~~548.9~~	~~449.0~~	~~100.0~~					~~151219.1~~	~~71393.5~~		
F15A01				~~128.3~~	~~128.2~~	~~0.2~~					~~41142.1~~	~~23288.5~~		
G11A11				~~422.9~~	~~298.9~~	~~124.0~~					~~61016.6~~	~~63011.9~~		
G12A11				~~322.9~~	~~270.4~~	~~52.5~~					~~61016.6~~	~~63011.9~~		
G13A11				~~344.2~~	~~292.3~~	~~51.9~~					~~61016.6~~	~~63011.9~~		
G14A11				~~327.2~~	~~277.6~~	~~49.6~~					~~61016.6~~	~~63011.9~~		
G15B03				~~637.4~~	~~268.5~~	~~368.9~~					~~65638.8~~	~~72031.7~~		
G16B16				~~371.5~~	~~251.9~~	~~119.6~~					~~65349.3~~	~~71816.2~~		

DTi = PTi - STi where i is either 'a' for acm or 'r' for reference

CR1 = DTa - (0.85 × DTr - 1) > 0 when DTa ≥ 0

CR2 = DTa –(1.15 x DTr + 1) < 0 when DTa ≥ 0~~CR3 = LITEa/LITEr must be ≥ 0.980 and ≤ 1.020~~

~~CR2~~ CR3 = DTa - (1.15 × DTr - 1) > 0 when DTa < 0

CR4 = DTa - (0.85 × DTr - 1) ≤ 0 when DTa ≤ 0~~CR4 = RECPa/RECPr must be ≥ 0.980 and ≤ 1.020~~

CR5 = LITEa/LITEr must be > 0.980 and < 1.020

CR6 = RECPa/RECPr must be > 0.980 and < 1.020

~~ACM~~Compliance Software Application Test Results for Optional Capabilities Tests

TEST	PTa	STa	DTa	PTr	STr	DTr	CR1	CR2	CR3	CR4	LITEr	RECPr	~~CR3~~CR5	~~CR4~~CR6
OC1A09														
O11B13				~~374.3~~	~~394.7~~	~~-20.4~~					~~151260.0~~	~~71391.7~~		
O12B13				~~411.3~~	~~391.9~~	~~19.4~~					~~151260.0~~	~~71391.7~~		
O21B13				~~554.5~~	~~441.1~~	~~113.3~~					~~151260.0~~	~~71391.7~~		
O22B13				~~518.0~~	~~441.1~~	~~76.9~~					~~151260.0~~	~~71391.7~~		
O23B13				~~469.8~~	~~441.1~~	~~28.7~~					~~151260.0~~	~~71391.7~~		
O24B13				~~457.2~~	~~441.1~~	~~16.1~~					~~151260.0~~	~~71391.7~~		
O31A12				~~368.4~~	~~302.1~~	~~66.3~~					~~83981.5~~	~~48685.4~~		
O32A12				~~289.1~~	~~258.2~~	~~30.8~~					~~83981.5~~	~~48685.4~~		
O33A12				~~286.6~~	~~258.2~~	~~28.4~~					~~83981.5~~	~~48685.4~~		
O41B13				~~484.9~~	~~451.1~~	~~33.8~~					~~151260.0~~	~~71391.7~~		
O61B12				~~348.4~~	~~404.9~~	~~-56.5~~					~~151224.9~~	~~71398.2~~		
O62B12				~~348.5~~	~~404.9~~	~~-56.4~~					~~151224.9~~	~~71398.2~~		
O63B12				~~357.8~~	~~404.9~~	~~-47.1~~					~~151224.9~~	~~71398.2~~		
O64B12				~~437.8~~	~~404.9~~	~~32.9~~					~~151224.9~~	~~71398.2~~		
O65B12				~~450.7~~	~~404.9~~	~~45.8~~					~~151224.9~~	~~71398.2~~		
O66B12				~~444.0~~	~~399.7~~	~~44.4~~					~~151224.9~~	~~71398.2~~		

DTi = PTi - STi where i is either 'a' for acm or 'r' for reference

CR1 = DTa - (0.85 × DTr - 1) > 0 when DTa ≥ 0

CR2 = DTa –(1.15 x DTr + 1) < 0 when DTa ≥ 0~~CR3 = LITEa/LITEr must be ≥ 0.980 and ≤ 1.020~~

~~CR2~~ CR3 = DTa - (1.15 × DTr - 1) > 0 when DTa < 0

CR4 = DTa - (0.85 × DTr - 1) ≤ 0 when DTa ≤ 0~~CR4 = RECPa/RECPr must be ≥ 0.980 and ≤ 1.020~~

CR5 = LITEa/LITEr must be > 0.980 and < 1.020

CR6 = RECPa/RECPr must be > 0.980 and < 1.020

~~ACM~~Compliance Software Application Test Results for Optional Capabilities Tests

TEST	PTa	STa	DTa	PTr	STr	DTr	CR1	CR2	CR3	CR4	LITEr	RECPr	CR5	~~CR4~~CR6
O71B12				~~569.8~~	~~465.4~~	~~104.4~~					~~151224.9~~	~~71398.2~~		
O81A11				~~123.7~~	~~97.8~~	~~25.9~~					~~20437.0~~	~~10388.9~~		
O82A15				~~585.9~~	~~461.9~~	~~124.0~~					~~74461.2~~	~~37774.0~~		
O91A13				~~353.1~~	~~327.0~~	~~26.1~~					~~89364.7~~	~~53555.7~~		
O92A11				~~307.8~~	~~325.9~~	~~-18.1~~					~~89505.5~~	~~53628.1~~		
O93A12				~~311.5~~	~~320.7~~	~~-9.2~~					~~89565.7~~	~~53643.1~~		
O94A13				~~331.9~~	~~342.2~~	~~-10.3~~					~~89364.7~~	~~53555.7~~		

DTi = PTi - STi where i is either 'a' for acm or 'r' for reference

CR1 = DTa - (0.85 × DTr - 1) > 0 when DTa ≥ 0

CR2 = DTa –(1.15 x DTr + 1) < 0 when DTa ≥ 0~~CR3 = LITEa/LITEr must be ≥ 0.980 and ≤ 1.020~~

~~CR2~~ CR3 = DTa - (1.15 × DTr - 1) > 0 when DTa < 0

CR4 = DTa - (0.85 × DTr - 1) ≤ 0 when DTa ≤ 0~~CR4 = RECPa/RECPr must be ≥ 0.980 and ≤ 1.020~~

CR5 = LITEa/LITEr must be > 0.980 and < 1.020

CR6 = RECPa/RECPr must be > 0.980 and < 1.020

Nonresidential ACM Appendix B – 2008

NACM Appendix ~~F~~ B – Technical Databases for Test Runs

Table NB-1 – ACM MATERIAL LIBRARY
Table NB-2 – ACM LAYERS LIBRARY
Table NB-3– ACM CONSTRUCTION LIBRARY
~~Table NB-4 – ACM VAV BOX LIBRARY~~
~~Table NB-5 – ACM PIU EQUIPMENT LIBRARY~~
~~Table NB-6 – ACM SMALL PACKAGE SPLIT AIR CONDITIONER~~
~~Table NB-7 – ACM LARGE PACKAGE SPLIT AIR CONDITIONER LIBRARY~~
~~Table NB-8 – ACM FAN COIL EQUIPMENT LIBRARY~~
~~Table NB-9 – ACM HEAT ONLY LIBRARY~~
~~Table NB-10 – ACM HEAT PUMP EQUIPMENT LIBRARY~~
~~Table NB-11 – ACM WATER LOOP EQUIPMENT LIBRARY~~
~~Table NB-12 – ACM EVAPORATIVE EQUIPMENT LIBRARY~~
~~Table NB-13 – ACM SYSTEM EQUIPMENT LIBRARY~~
~~Table NB-14 – ACM ELECTRICAL CHILLER LIBRARY~~
~~Table NB-15 – ACM ABSORPTION CHILLER LIBRARY~~
~~Table NB-16 – ACM TOWER LIBRARY~~
~~Table NB-17 – ACM BOILER LIBRARY~~
~~Table NB-18 – ACM VAV BOX SELECTED~~
~~Table NB-19 – ACM PACKAGE UNITS SELECTED~~
~~Table NB-20 – ACM WATER LOOP HEAT PUMP SELECTED~~
~~Table NB-21 – ACM EVAPORATIVE COOLING EQUIPMENT SELECTED~~
~~Table NB-22 – FAN COIL UNITS SELECTED~~
~~Table NB-23 – ACM HEAT PUMP EQUIPMENT SELECTED~~
~~Table NB-24 – ACM SYSTEM EQUIPMENT SELECTED~~
~~Table NB-25 – ACM CENTRAL COOLING EQUIPMENT SELECTED~~
~~Table NB-26 – ACM BOILER SELECTION~~

Table NB-1 – ACM MATERIAL LIBRARY

NAME	THICKNESS (feet)	CONDUCT.	DENSITY	SP-HEAT	R-VALUE
2X4	0.2917	0.0842	35.00	0.39	
2X6	0.4583	0.0842	35.00	0.39	
AIRWALL-MAT					1.00
CARPET2					2.00
CEL-2.5	0.2083	0.0333	5.00	0.32	
EARTH	1.0000	0.5000	85.00	0.20	
ISO-3.0	0.2500	0.0142	1.50	0.38	
PERIM	1.3330	0.9300	82.00	0.22	
R1.60					1.60
R1.95					1.95
R10-RIGID-INS	0.1667	0.0167	14.00	0.17	
R11-INS	0.2917	0.0265	0.60	0.20	
R13-INS	0.2917	0.0224	0.60	0.20	
R19-INS	0.5035	0.0265	0.60	0.20	
R30-INS	0.7500	0.0265	0.60	0.20	
R4-RIGID-INS	0.0833	0.0218	14.00	0.17	
R4.76					4.76
R5.93					5.93
R7-RIGID-INS	0.0833	0.0119	14.00	0.17	
SC2A	0.0729	0.4288	166.00	0.20	
SPANDREL-R10-MAT	1.0000	0.0100	25.00	0.20	
SPANDREL-R15-MAT	1.0000	0.0667	30.00	0.20	

Table NB-2 – ACM LAYERS LIBRARY

Name	Mat[1]	Mat[2]	Mat[3]	Mat[4]	Mat[5]	I-F-R
AIRWALL-LAY	AIRWALL-MAT					0.68
CONC-SPANDEL-LAY	CC22	W1B-R13	GP02			0.68
DEMISING-LAY	GP01	W1A-R11	GP01			0.68
DOORC-LAY	AS01	WD11	AS01			0.68
FLR-CONC-CAV-LAY	CEL-2.5	CC03	CP01			0.92
FLR-CONC-RAK-LAY	CEL-2.5	CC05	CP01			0.92
INTWALL-LAY	GP03	GP03	GP03			0.68
RF-INTERIOR-LAY	CC04	CP01				0.61
RF-ISO3.0-LAY	BR01	ISO-3.0	PW04			0.61
ROOFI-F-LAY	CC32	PW05	WD05	WD05		0.61
ROOFI-LAY	CC32	PW05				0.61
SLAB-LAY	EARTH	CC14				0.92
SLABC-LAY	EARTH	CC14	CP01			0.92
SLABP-LAY	EARTH	CC14	CP01			0.92
SPANDREL-R10-LAY	SPANDREL-R10-MAT					0.68
SPANDREL-R15-LAY	SPANDREL-R15-MAT					0.61
WIZ-LAY	GP02	W1A-R11	GP02			0.68

Table NB-3– ACM CONSTRUCTION LIBRARY

Construction	Layers	ABS	RO
AIRWALL	AIRWALL-LAY	0.7	3
CONC-SPANDEL	CONC-SPANDEL-LAY	0.7	3
DEMISING	DEMISING-LAY	0.7	3
DOORC	DOORC-LAY	0.7	3
FLR-CONC-CAV	FLR-CONC-CAV-LAY	0.7	3
FLR-CONC-RAK	FLR-CONC-RAK-LAY	0.7	3
INTWALL	INTWALL-LAY	0.7	3
RF-INTERIOR	RF-INTERIOR-LAY	0.7	3
RF-ISO3.0	RF-ISO3.0-LAY	0.7	3
ROOFI	ROOFI-LAY	0.7	3
ROOFI-F	ROOFI-F-LAY	0.7	3
SLAB	SLAB-LAY	0.1	3
SLABC	SLABC-LAY	0.1	3
SLABP	SLABP-LAY	0.1	3
SPANDREL-R10	SPANDREL-R10-LAY	0.7	3
SPANDREL-R15	SPANDREL-R15-LAY	0.4	3
WIZ	WIZ-LAY	0.7	3

~~Table NB-4 – ACM VAV BOX LIBRARY~~

~~MODEL~~	~~CFM~~	~~MIN RATIO~~	~~REHEAT CAP~~
~~VAV1200A~~	~~1200~~	~~0.35~~	~~21000~~
~~VAV1200H~~	~~1200~~	~~0.30~~	~~18000~~
~~VAV1200L~~	~~1200~~	~~0.40~~	~~24000~~
~~VAV1500A~~	~~1500~~	~~0.35~~	~~26250~~
~~VAV1500H~~	~~1500~~	~~0.30~~	~~22500~~
~~VAV1500L~~	~~1500~~	~~0.40~~	~~30000~~
~~VAV2000A~~	~~2000~~	~~0.35~~	~~35000~~
~~VAV2000H~~	~~2000~~	~~0.30~~	~~30000~~
~~VAV2000L~~	~~2000~~	~~0.40~~	~~40000~~
~~VAV2500A~~	~~2500~~	~~0.35~~	~~43750~~
~~VAV2500H~~	~~2500~~	~~0.30~~	~~37500~~
~~VAV2500L~~	~~2500~~	~~0.40~~	~~50000~~
~~VAV3000A~~	~~3000~~	~~0.35~~	~~52500~~
~~VAV3000H~~	~~3000~~	~~0.30~~	~~45000~~
~~VAV3000L~~	~~3000~~	~~0.40~~	~~60000~~
~~VAV300A~~	~~300~~	~~0.35~~	~~5250~~
~~VAV300H~~	~~300~~	~~0.30~~	~~4500~~
~~VAV300L~~	~~300~~	~~0.40~~	~~6000~~
~~VAV3500A~~	~~3500~~	~~0.35~~	~~61250~~
~~VAV3500H~~	~~3500~~	~~0.30~~	~~52500~~
~~VAV3500L~~	~~3500~~	~~0.40~~	~~70000~~
~~VAV4000A~~	~~4000~~	~~0.35~~	~~70000~~
~~VAV4000H~~	~~4000~~	~~0.30~~	~~60000~~
~~VAV4000L~~	~~4000~~	~~0.40~~	~~80000~~
~~VAV4500A~~	~~4500~~	~~0.35~~	~~78750~~
~~VAV4500H~~	~~4500~~	~~0.30~~	~~67500~~
~~VAV4500L~~	~~4500~~	~~0.40~~	~~90000~~
~~VAV450A~~	~~450~~	~~0.35~~	~~7875~~
~~VAV450H~~	~~450~~	~~0.30~~	~~6750~~
~~VAV450L~~	~~450~~	~~0.40~~	~~9000~~
~~VAV5000A~~	~~5000~~	~~0.35~~	~~87500~~
~~VAV5000H~~	~~5000~~	~~0.30~~	~~75000~~
~~VAV5000L~~	~~5000~~	~~0.40~~	~~100000~~
~~VAV600A~~	~~600~~	~~0.35~~	~~10500~~
~~VAV600H~~	~~600~~	~~0.30~~	~~9000~~
~~VAV600L~~	~~600~~	~~0.40~~	~~12000~~
~~VAV900A~~	~~900~~	~~0.35~~	~~15750~~
~~VAV900H~~	~~900~~	~~0.30~~	~~13500~~
~~VAV900L~~	~~900~~	~~0.40~~	~~18000~~

~~Table NB-5 – ACM PIU EQUIPMENT LIBRARY~~

~~Model~~	~~TYP~~	~~Cfm~~	~~M-C-R~~	~~F-C-R~~	~~FPI~~	~~ReheatCap~~
~~PIU300AP~~	~~P~~	~~300~~	~~0.3~~	~~0.60~~	~~0.33~~	~~8100~~
~~PIU300AS~~	~~S~~	~~300~~	~~0.3~~	~~1.00~~	~~0.33~~	~~8100~~
~~PIU300HP~~	~~P~~	~~300~~	~~0.3~~	~~0.90~~	~~0.28~~	~~12000~~
~~PIU300HS~~	~~S~~	~~300~~	~~0.3~~	~~1.00~~	~~0.28~~	~~12000~~
~~PIU300LP~~	~~P~~	~~300~~	~~0.3~~	~~0.40~~	~~0.35~~	~~5400~~
~~PIU300LS~~	~~S~~	~~300~~	~~0.3~~	~~1.00~~	~~0.35~~	~~5400~~
~~PIU450AP~~	~~P~~	~~450~~	~~0.3~~	~~0.60~~	~~0.33~~	~~12000~~
~~PIU450AS~~	~~S~~	~~450~~	~~0.3~~	~~1.00~~	~~0.33~~	~~12000~~
~~PIU450HP~~	~~P~~	~~450~~	~~0.3~~	~~0.90~~	~~0.28~~	~~18200~~
~~PIU450HS~~	~~S~~	~~450~~	~~0.3~~	~~1.00~~	~~0.28~~	~~18200~~
~~PIU450LP~~	~~P~~	~~450~~	~~0.3~~	~~0.40~~	~~0.35~~	~~8100~~
~~PIU450LS~~	~~S~~	~~450~~	~~0.3~~	~~1.00~~	~~0.35~~	~~8100~~
~~PIU600AP~~	~~P~~	~~600~~	~~0.3~~	~~0.60~~	~~0.33~~	~~16200~~
~~PIU600AS~~	~~S~~	~~600~~	~~0.3~~	~~1.00~~	~~0.33~~	~~16200~~
~~PIU600HP~~	~~P~~	~~600~~	~~0.3~~	~~0.90~~	~~0.28~~	~~24300~~
~~PIU600HS~~	~~S~~	~~600~~	~~0.3~~	~~1.00~~	~~0.28~~	~~24300~~
~~PIU600LP~~	~~P~~	~~600~~	~~0.3~~	~~0.40~~	~~0.35~~	~~10800~~
~~PIU600LS~~	~~S~~	~~600~~	~~0.3~~	~~1.00~~	~~0.35~~	~~10800~~
~~PIU750AP~~	~~P~~	~~750~~	~~0.3~~	~~0.60~~	~~0.33~~	~~20250~~
~~PIU750AS~~	~~S~~	~~750~~	~~0.3~~	~~1.00~~	~~0.33~~	~~20250~~
~~PIU750HP~~	~~P~~	~~750~~	~~0.3~~	~~0.90~~	~~0.28~~	~~30400~~
~~PIU750HS~~	~~S~~	~~750~~	~~0.3~~	~~1.00~~	~~0.28~~	~~20250~~
~~PIU750LP~~	~~P~~	~~750~~	~~0.3~~	~~0.40~~	~~0.35~~	~~13500~~
~~PIU750LS~~	~~S~~	~~750~~	~~0.3~~	~~1.00~~	~~0.35~~	~~13500~~
~~PIU900AP~~	~~P~~	~~900~~	~~0.3~~	~~0.60~~	~~0.33~~	~~24300~~
~~PIU900AS~~	~~S~~	~~900~~	~~0.3~~	~~1.00~~	~~0.33~~	~~24300~~
~~PIU900HP~~	~~P~~	~~900~~	~~0.3~~	~~0.90~~	~~0.28~~	~~36500~~
~~PIU900HS~~	~~S~~	~~900~~	~~0.3~~	~~1.00~~	~~0.28~~	~~36500~~
~~PIU900LP~~	~~P~~	~~900~~	~~0.3~~	~~0.40~~	~~0.35~~	~~16200~~
~~PIU900LS~~	~~S~~	~~900~~	~~0.3~~	~~1.00~~	~~0.35~~	~~16200~~

~~Table NB-6 – ACM SMALL PACKAGE SPLIT AIR CONDITIONER~~

~~Model~~	~~Cap95~~	~~Cap82~~	~~EER~~	~~SEER~~	~~CFM~~	~~Cd~~	~~FPlcv~~	~~FPlvav~~	~~HCAP~~	~~AFUE~~
~~ACSP17A~~	~~17000~~	~~18850~~	~~9.60~~	~~9.90~~	~~500~~	~~0.15~~	~~0.50~~	~~1.00~~	~~25000~~	~~82~~
~~ACSP17H~~	~~17000~~	~~17860~~	~~9.70~~	~~10.00~~	~~500~~	~~0.20~~	~~0.35~~	~~0.75~~	~~25000~~	~~84~~
~~ACSP17L~~	~~17000~~	~~20200~~	~~9.50~~	~~9.90~~	~~500~~	~~0.10~~	~~0.90~~	~~1.30~~	~~25000~~	~~80~~
~~ACSP22A~~	~~22000~~	~~24270~~	~~9.60~~	~~9.90~~	~~600~~	~~0.15~~	~~0.50~~	~~1.00~~	~~30000~~	~~82~~
~~ACSP22H~~	~~22000~~	~~24700~~	~~10.40~~	~~12.00~~	~~600~~	~~0.20~~	~~0.35~~	~~0.75~~	~~30000~~	~~84~~
~~ACSP22L~~	~~22000~~	~~24640~~	~~9.50~~	~~9.90~~	~~600~~	~~0.10~~	~~0.90~~	~~1.30~~	~~30000~~	~~82~~
~~ACSP28A~~	~~28000~~	~~31310~~	~~9.60~~	~~9.90~~	~~800~~	~~0.15~~	~~0.50~~	~~1.00~~	~~40000~~	~~84~~
~~ACSP28H~~	~~28000~~	~~31320~~	~~10.60~~	~~12.00~~	~~800~~	~~0.20~~	~~0.35~~	~~0.75~~	~~40000~~	~~80~~
~~ACSP28L~~	~~28000~~	~~31420~~	~~9.50~~	~~9.90~~	~~800~~	~~0.10~~	~~0.90~~	~~1.30~~	~~40000~~	~~82~~
~~ACSP34A~~	~~34000~~	~~36850~~	~~9.60~~	~~9.90~~	~~1100~~	~~0.15~~	~~0.50~~	~~1.00~~	~~55000~~	~~84~~
~~ACSP34H~~	~~34000~~	~~37770~~	~~10.50~~	~~12.00~~	~~1100~~	~~0.20~~	~~0.35~~	~~0.75~~	~~55000~~	~~80~~
~~ACSP34L~~	~~34000~~	~~38370~~	~~9.50~~	~~9.90~~	~~1100~~	~~0.10~~	~~0.90~~	~~1.30~~	~~55000~~	~~82~~
~~ACSP40A~~	~~40000~~	~~43360~~	~~9.60~~	~~9.90~~	~~1200~~	~~0.15~~	~~0.50~~	~~1.00~~	~~60000~~	~~84~~
~~ACSP40H~~	~~40000~~	~~42530~~	~~10.80~~	~~12.00~~	~~1200~~	~~0.20~~	~~0.35~~	~~0.75~~	~~60000~~	~~80~~
~~ACSP40L~~	~~40000~~	~~46820~~	~~9.50~~	~~9.90~~	~~1200~~	~~0.10~~	~~0.90~~	~~1.30~~	~~60000~~	~~82~~
~~ACSP46A~~	~~46000~~	~~49770~~	~~9.60~~	~~9.90~~	~~1600~~	~~0.15~~	~~0.50~~	~~1.00~~	~~80000~~	~~84~~
~~ACSP46H~~	~~46000~~	~~51400~~	~~10.50~~	~~12.00~~	~~1600~~	~~0.20~~	~~0.35~~	~~0.75~~	~~80000~~	~~80~~
~~ACSP46L~~	~~46000~~	~~49660~~	~~9.50~~	~~9.90~~	~~1600~~	~~0.10~~	~~0.90~~	~~1.30~~	~~80000~~	~~82~~
~~ACSP52A~~	~~52000~~	~~55500~~	~~9.60~~	~~9.90~~	~~1700~~	~~0.15~~	~~0.50~~	~~1.00~~	~~85000~~	~~84~~
~~ACSP52H~~	~~52000~~	~~56280~~	~~11.10~~	~~12.50~~	~~1700~~	~~0.20~~	~~0.35~~	~~0.75~~	~~85000~~	~~80~~
~~ACSP52L~~	~~52000~~	~~56650~~	~~9.50~~	~~9.90~~	~~1700~~	~~0.10~~	~~0.90~~	~~1.30~~	~~85000~~	~~82~~
~~ACSP58A~~	~~58000~~	~~62520~~	~~9.60~~	~~9.90~~	~~1800~~	~~0.15~~	~~0.50~~	~~1.00~~	~~90000~~	~~84~~
~~ACSP58H~~	~~58000~~	~~62290~~	~~10.80~~	~~12.00~~	~~1800~~	~~0.20~~	~~0.35~~	~~0.75~~	~~90000~~	~~80~~
~~ACSP58L~~	~~58000~~	~~63360~~	~~9.50~~	~~9.90~~	~~1800~~	~~0.10~~	~~0.90~~	~~1.30~~	~~90000~~	~~82~~
~~ACSP63A~~	~~63000~~	~~67460~~	~~9.60~~	~~9.90~~	~~1900~~	~~0.15~~	~~0.50~~	~~1.00~~	~~95000~~	~~84~~
~~ACSP63H~~	~~63000~~	~~68000~~	~~10.50~~	~~12.10~~	~~1900~~	~~0.20~~	~~0.35~~	~~0.75~~	~~95000~~	~~80~~
~~ACSP63L~~	~~63000~~	~~67830~~	~~9.50~~	~~9.90~~	~~1900~~	~~0.10~~	~~0.90~~	~~1.30~~	~~95000~~	~~82~~

~~Table NB-7 – ACM LARGE PACKAGE SPLIT AIR CONDITIONER LIBRARY~~

~~Model~~	~~Cap95~~	~~Cfm~~	~~BHPari~~	~~MotorEff~~	~~FPlcv~~	~~FPlvav~~	~~EER~~	~~HCap~~	~~AFUE~~
~~ACLP007A~~	~~80150~~	~~3100~~	~~0.23~~	~~0.810~~	~~0.50~~	~~1.00~~	~~9.00~~	~~93000~~	~~82~~
~~ACLP007H~~	~~79100~~	~~2800~~	~~0.21~~	~~0.875~~	~~0.35~~	~~0.75~~	~~9.20~~	~~84000~~	~~84~~
~~ACLP007L~~	~~77350~~	~~2500~~	~~0.18~~	~~0.810~~	~~0.90~~	~~1.30~~	~~8.90~~	~~75000~~	~~80~~
~~ACLP010A~~	~~114500~~	~~4500~~	~~0.41~~	~~0.850~~	~~0.50~~	~~1.00~~	~~9.00~~	~~135000~~	~~82~~
~~ACLP010H~~	~~113000~~	~~4000~~	~~0.34~~	~~0.917~~	~~0.35~~	~~0.75~~	~~9.20~~	~~120000~~	~~84~~
~~ACLP010L~~	~~110500~~	~~3500~~	~~0.30~~	~~0.850~~	~~0.90~~	~~1.30~~	~~8.90~~	~~105000~~	~~80~~
~~ACLP015A~~	~~171750~~	~~6750~~	~~0.85~~	~~0.850~~	~~0.50~~	~~1.00~~	~~8.70~~	~~202500~~	~~82~~
~~ACLP015H~~	~~169500~~	~~6000~~	~~0.67~~	~~0.917~~	~~0.35~~	~~0.75~~	~~9.00~~	~~180000~~	~~84~~
~~ACLP015L~~	~~165750~~	~~5250~~	~~0.38~~	~~0.850~~	~~0.90~~	~~1.30~~	~~8.50~~	~~157500~~	~~80~~
~~ACLP020A~~	~~229000~~	~~9000~~	~~1.60~~	~~0.850~~	~~0.50~~	~~1.00~~	~~8.70~~	~~270000~~	~~82~~
~~ACLP020H~~	~~226000~~	~~8000~~	~~1.23~~	~~0.917~~	~~0.35~~	~~0.75~~	~~9.00~~	~~240000~~	~~84~~
~~ACLP020L~~	~~221000~~	~~7000~~	~~0.92~~	~~0.850~~	~~0.90~~	~~1.30~~	~~8.50~~	~~210000~~	~~80~~
~~ACLP025A~~	~~292000~~	~~8750~~	~~1.34~~	~~0.850~~	~~0.50~~	~~1.00~~	~~8.70~~	~~262500~~	~~82~~
~~ACLP025H~~	~~281000~~	~~7000~~	~~0.79~~	~~0.917~~	~~0.35~~	~~0.75~~	~~9.00~~	~~210000~~	~~84~~
~~ACLP025L~~	~~271500~~	~~6000~~	~~0.50~~	~~0.850~~	~~0.90~~	~~1.30~~	~~8.50~~	~~180000~~	~~80~~
~~ACLP030A~~	~~352000~~	~~12000~~	~~2.13~~	~~0.850~~	~~0.50~~	~~1.00~~	~~8.70~~	~~360000~~	~~82~~
~~ACLP030H~~	~~345000~~	~~10500~~	~~1.40~~	~~0.917~~	~~0.35~~	~~0.75~~	~~9.00~~	~~315000~~	~~84~~
~~ACLP030L~~	~~337000~~	~~9000~~	~~1.09~~	~~0.850~~	~~0.90~~	~~1.30~~	~~8.50~~	~~270000~~	~~80~~
~~ACLP040A~~	~~483000~~	~~18000~~	~~4.13~~	~~0.860~~	~~0.50~~	~~0.75~~	~~8.70~~	~~540000~~	~~82~~
~~ACLP040H~~	~~476000~~	~~16000~~	~~3.02~~	~~0.910~~	~~0.35~~	~~0.75~~	~~9.00~~	~~480000~~	~~84~~
~~ACLP040L~~	~~467000~~	~~14000~~	~~2.12~~	~~0.860~~	~~0.90~~	~~1.30~~	~~8.50~~	~~420000~~	~~80~~
~~ACLP050A~~	~~589000~~	~~22500~~	~~7.60~~	~~0.860~~	~~0.50~~	~~1.00~~	~~8.70~~	~~675000~~	~~82~~
~~ACLP050H~~	~~580000~~	~~20000~~	~~5.49~~	~~0.910~~	~~0.35~~	~~0.75~~	~~9.00~~	~~600000~~	~~84~~
~~ACLP050L~~	~~569000~~	~~17500~~	~~3.75~~	~~0.860~~	~~0.90~~	~~1.30~~	~~8.50~~	~~525000~~	~~80~~
~~ACLP060A~~	~~723000~~	~~27000~~	~~7.26~~	~~0.880~~	~~0.50~~	~~1.00~~	~~8.70~~	~~810000~~	~~82~~
~~ACLP060H~~	~~712000~~	~~24000~~	~~5.41~~	~~0.930~~	~~0.35~~	~~0.75~~	~~9.00~~	~~720000~~	~~84~~
~~ACLP060L~~	~~698000~~	~~21000~~	~~3.91~~	~~0.880~~	~~0.90~~	~~1.30~~	~~8.50~~	~~630000~~	~~80~~
~~ACLP070A~~	~~811000~~	~~26000~~	~~6.60~~	~~0.880~~	~~0.50~~	~~1.00~~	~~8.50~~	~~780000~~	~~82~~
~~ACLP070H~~	~~801000~~	~~24000~~	~~5.41~~	~~0.930~~	~~0.35~~	~~0.75~~	~~8.80~~	~~720000~~	~~84~~
~~ACLP070L~~	~~815000~~	~~27000~~	~~7.26~~	~~0.880~~	~~0.90~~	~~1.30~~	~~8.20~~	~~810000~~	~~80~~
~~ACLP075A~~	~~883000~~	~~26000~~	~~6.60~~	~~0.880~~	~~0.50~~	~~1.00~~	~~8.50~~	~~780000~~	~~82~~
~~ACLP075H~~	~~873000~~	~~24000~~	~~5.41~~	~~0.930~~	~~0.35~~	~~0.75~~	~~8.80~~	~~720000~~	~~84~~
~~ACLP075L~~	~~862000~~	~~22000~~	~~3.91~~	~~0.880~~	~~0.90~~	~~1.30~~	~~8.20~~	~~660000~~	~~80~~
~~ACLP090A~~	~~1062000~~	~~42000~~	~~15.03~~	~~0.880~~	~~0.50~~	~~1.00~~	~~8.70~~	~~1260000~~	~~82~~
~~ACLP090H~~	~~1044000~~	~~37000~~	~~10.82~~	~~0.930~~	~~0.35~~	~~0.75~~	~~8.80~~	~~1110000~~	~~84~~
~~ACLP090L~~	~~1021000~~	~~32000~~	~~7.52~~	~~0.880~~	~~0.90~~	~~1.30~~	~~8.20~~	~~960000~~	~~80~~
~~ACLP105A~~	~~1229000~~	~~43000~~	~~15.99~~	~~0.890~~	~~0.50~~	~~1.00~~	~~8.50~~	~~1290000~~	~~82~~
~~ACLP105H~~	~~1213000~~	~~39000~~	~~12.39~~	~~0.941~~	~~0.35~~	~~0.75~~	~~8.80~~	~~1170000~~	~~84~~
~~ACLP105L~~	~~1193000~~	~~35000~~	~~9.40~~	~~0.880~~	~~0.90~~	~~1.30~~	~~8.20~~	~~1050000~~	~~80~~

~~Table NB-8 – ACM FAN COIL EQUIPMENT LIBRARY~~

~~MODEL~~	~~COOLCAP~~	~~HEATCAP~~	~~CFM~~	~~FPI~~
~~FC008A~~	~~8400~~	~~12000~~	~~300~~	~~0.50~~
~~FC008H~~	~~8400~~	~~12000~~	~~300~~	~~0.35~~
~~FC008L~~	~~8400~~	~~12000~~	~~300~~	~~0.90~~
~~FC013A~~	~~12600~~	~~18000~~	~~450~~	~~0.50~~
~~FC013H~~	~~12600~~	~~18000~~	~~450~~	~~0.35~~
~~FC013L~~	~~12600~~	~~18000~~	~~450~~	~~0.90~~
~~FC017A~~	~~16800~~	~~24000~~	~~600~~	~~0.50~~
~~FC017H~~	~~16800~~	~~24000~~	~~600~~	~~0.35~~
~~FC017L~~	~~16800~~	~~24000~~	~~600~~	~~0.90~~
~~FC021A~~	~~21000~~	~~30000~~	~~750~~	~~0.50~~
~~FC021H~~	~~21000~~	~~30000~~	~~750~~	~~0.35~~
~~FC021L~~	~~21000~~	~~30000~~	~~750~~	~~0.90~~
~~FC028A~~	~~28000~~	~~40000~~	~~1000~~	~~0.50~~
~~FC028H~~	~~28000~~	~~40000~~	~~1000~~	~~0.35~~
~~FC028L~~	~~28000~~	~~40000~~	~~1000~~	~~0.90~~
~~FC035A~~	~~35000~~	~~50000~~	~~1250~~	~~0.50~~
~~FC035H~~	~~35000~~	~~50000~~	~~1250~~	~~0.35~~
~~FC035L~~	~~35000~~	~~50000~~	~~1250~~	~~0.90~~
~~FC042A~~	~~42000~~	~~60000~~	~~1500~~	~~0.50~~
~~FC042H~~	~~42000~~	~~60000~~	~~1500~~	~~0.35~~
~~FC042L~~	~~42000~~	~~60000~~	~~1500~~	~~0.90~~
~~FC056A~~	~~56000~~	~~80000~~	~~2000~~	~~0.50~~
~~FC056H~~	~~56000~~	~~80000~~	~~2000~~	~~0.35~~
~~FC056L~~	~~56000~~	~~80000~~	~~2000~~	~~0.90~~
~~FC070A~~	~~70000~~	~~100000~~	~~2500~~	~~0.50~~
~~FC070H~~	~~70000~~	~~100000~~	~~2500~~	~~0.35~~
~~FC070L~~	~~70000~~	~~100000~~	~~2500~~	~~0.90~~
~~FC084A~~	~~84000~~	~~120000~~	~~3000~~	~~0.50~~
~~FC084H~~	~~84000~~	~~120000~~	~~3000~~	~~0.35~~
~~FC084L~~	~~84000~~	~~120000~~	~~3000~~	~~0.90~~
~~FC098A~~	~~98000~~	~~140000~~	~~3500~~	~~0.50~~
~~FC098H~~	~~98000~~	~~140000~~	~~3500~~	~~0.35~~
~~FC098L~~	~~98000~~	~~140000~~	~~3500~~	~~0.90~~
~~FC112A~~	~~112000~~	~~160000~~	~~4000~~	~~0.50~~
~~FC112H~~	~~112000~~	~~160000~~	~~4000~~	~~0.35~~
~~FC112L~~	~~112000~~	~~160000~~	~~4000~~	~~0.90~~
~~FC126A~~	~~126000~~	~~180000~~	~~4500~~	~~0.50~~
~~FC126H~~	~~126000~~	~~180000~~	~~4500~~	~~0.35~~
~~FC126L~~	~~126000~~	~~180000~~	~~4500~~	~~0.90~~
~~FC140A~~	~~140000~~	~~200000~~	~~5000~~	~~0.50~~
~~FC140H~~	~~140000~~	~~200000~~	~~5000~~	~~0.35~~
~~FC140L~~	~~140000~~	~~200000~~	~~5000~~	~~0.90~~
~~FC168A~~	~~168000~~	~~240000~~	~~6000~~	~~0.50~~
~~FC168H~~	~~168000~~	~~240000~~	~~6000~~	~~0.35~~

~~MODEL~~	~~COOLCAP~~	~~HEATCAP~~	~~CFM~~	~~FPI~~
~~FC168L~~	~~168000~~	~~240000~~	~~6000~~	~~0.90~~
~~FC196A~~	~~196000~~	~~280000~~	~~7000~~	~~0.50~~
~~FC196H~~	~~196000~~	~~280000~~	~~7000~~	~~0.35~~
~~FC196L~~	~~196000~~	~~280000~~	~~7000~~	~~0.90~~
~~FC224A~~	~~224000~~	~~320000~~	~~8000~~	~~0.50~~
~~FC224H~~	~~224000~~	~~320000~~	~~8000~~	~~0.35~~
~~FC224L~~	~~224000~~	~~320000~~	~~8000~~	~~0.90~~
~~FC252A~~	~~252000~~	~~360000~~	~~9000~~	~~0.50~~
~~FC252H~~	~~252000~~	~~360000~~	~~9000~~	~~0.35~~
~~FC252L~~	~~252000~~	~~360000~~	~~9000~~	~~0.90~~
~~FC280A~~	~~280000~~	~~400000~~	~~10000~~	~~0.50~~
~~FC280H~~	~~280000~~	~~400000~~	~~10000~~	~~0.35~~
~~FC280L~~	~~280000~~	~~400000~~	~~10000~~	~~0.90~~
~~FC350A~~	~~350000~~	~~500000~~	~~12500~~	~~0.50~~
~~FC350H~~	~~350000~~	~~500000~~	~~12500~~	~~0.35~~
~~FC350L~~	~~350000~~	~~500000~~	~~12500~~	~~0.90~~
~~FC420A~~	~~420000~~	~~600000~~	~~15000~~	~~0.50~~
~~FC420H~~	~~420000~~	~~600000~~	~~15000~~	~~0.35~~
~~FC420L~~	~~420000~~	~~600000~~	~~15000~~	~~0.90~~
~~FC490A~~	~~490000~~	~~700000~~	~~17500~~	~~0.50~~
~~FC490H~~	~~490000~~	~~700000~~	~~17500~~	~~0.35~~
~~FC490L~~	~~490000~~	~~700000~~	~~17500~~	~~0.90~~
~~FC560A~~	~~560000~~	~~800000~~	~~20000~~	~~0.50~~
~~FC560H~~	~~560000~~	~~800000~~	~~20000~~	~~0.35~~
~~FC560L~~	~~560000~~	~~800000~~	~~20000~~	~~0.90~~
~~FC700A~~	~~700000~~	~~1000000~~	~~25000~~	~~0.50~~
~~FC700H~~	~~700000~~	~~1000000~~	~~25000~~	~~0.35~~
~~FC700L~~	~~700000~~	~~1000000~~	~~25000~~	~~0.90~~
~~FC840A~~	~~840000~~	~~1200000~~	~~30000~~	~~0.50~~
~~FC840H~~	~~840000~~	~~1200000~~	~~30000~~	~~0.35~~
~~FC840L~~	~~840000~~	~~1200000~~	~~30000~~	~~0.90~~

~~*Table NB-9 – ACM HEAT ONLY LIBRARY*~~

~~Model~~	~~HeatCap~~	~~CFM~~	~~FPI~~	~~AFUE~~
~~HEAT045A~~	~~45000~~	~~1000~~	~~0.50~~	~~82~~
~~HEAT045H~~	~~45000~~	~~1000~~	~~0.35~~	~~84~~
~~HEAT045L~~	~~45000~~	~~1000~~	~~0.90~~	~~80~~
~~HEAT063A~~	~~63000~~	~~1500~~	~~0.50~~	~~82~~
~~HEAT063H~~	~~63000~~	~~1500~~	~~0.35~~	~~84~~
~~HEAT063L~~	~~63000~~	~~1500~~	~~0.90~~	~~80~~
~~HEAT090A~~	~~90000~~	~~2000~~	~~0.50~~	~~82~~
~~HEAT090H~~	~~90000~~	~~2000~~	~~0.35~~	~~84~~
~~HEAT090L~~	~~90000~~	~~2000~~	~~0.90~~	~~80~~
~~HEAT108A~~	~~108000~~	~~2500~~	~~0.50~~	~~82~~
~~HEAT108H~~	~~108000~~	~~2500~~	~~0.35~~	~~84~~
~~HEAT108L~~	~~108000~~	~~2500~~	~~0.90~~	~~80~~
~~HEAT135A~~	~~135000~~	~~3000~~	~~0.50~~	~~82~~
~~HEAT135H~~	~~135000~~	~~3000~~	~~0.35~~	~~84~~
~~HEAT135L~~	~~135000~~	~~3000~~	~~0.90~~	~~80~~
~~HEAT153A~~	~~153000~~	~~3500~~	~~0.50~~	~~82~~
~~HEAT153H~~	~~153000~~	~~3500~~	~~0.35~~	~~84~~
~~HEAT153L~~	~~153000~~	~~3500~~	~~0.90~~	~~80~~
~~HEAT180A~~	~~180000~~	~~4000~~	~~0.50~~	~~82~~
~~HEAT180H~~	~~180000~~	~~4000~~	~~0.35~~	~~84~~
~~HEAT180L~~	~~180000~~	~~4000~~	~~0.90~~	~~80~~
~~HEAT215A~~	~~215000~~	~~5000~~	~~0.50~~	~~82~~
~~HEAT215H~~	~~215000~~	~~5000~~	~~0.35~~	~~84~~
~~HEAT215L~~	~~215000~~	~~5000~~	~~0.90~~	~~80~~
~~HEAT323A~~	~~323000~~	~~7500~~	~~0.50~~	~~82~~
~~HEAT323H~~	~~323000~~	~~7500~~	~~0.35~~	~~84~~
~~HEAT323L~~	~~323000~~	~~7500~~	~~0.90~~	~~80~~
~~HEAT450A~~	~~450000~~	~~10000~~	~~0.50~~	~~82~~
~~HEAT450H~~	~~450000~~	~~10000~~	~~0.35~~	~~84~~
~~HEAT450L~~	~~450000~~	~~10000~~	~~0.90~~	~~80~~
~~HEAT538A~~	~~538000~~	~~12500~~	~~0.50~~	~~82~~
~~HEAT538H~~	~~538000~~	~~12500~~	~~0.35~~	~~84~~
~~HEAT538L~~	~~538000~~	~~12500~~	~~0.90~~	~~80~~
~~HEAT665A~~	~~665000~~	~~15000~~	~~0.50~~	~~82~~
~~HEAT665H~~	~~665000~~	~~15000~~	~~0.35~~	~~84~~
~~HEAT665L~~	~~665000~~	~~15000~~	~~0.90~~	~~80~~
~~HEAT900A~~	~~900000~~	~~20000~~	~~0.50~~	~~82~~
~~HEAT900H~~	~~900000~~	~~20000~~	~~0.35~~	~~84~~
~~HEAT900L~~	~~900000~~	~~20000~~	~~0.90~~	~~80~~

~~Table NB-10 – ACM HEAT PUMP EQUIPMENT LIBRARY~~

~~Model~~	~~Cap 95~~	~~Cap 82~~	~~Hcap 47~~	~~Hcap 17~~	~~EER~~	~~SEER~~	~~HSPF~~	~~COP 47~~	~~COP 17~~	~~Cfm~~	~~Cd~~	~~Fpi~~
~~HPSP108A~~	~~108000~~		~~110000~~	~~58700~~	~~9.00~~		~~7.32~~	~~3.00~~	~~2.00~~	~~3300~~		~~0.50~~
~~HPSP108H~~	~~108000~~		~~109800~~	~~56300~~	~~9.20~~		~~7.32~~	~~3.00~~	~~2.00~~	~~3300~~		~~0.35~~
~~HPSP108L~~	~~108000~~		~~109800~~	~~59000~~	~~8.90~~		~~7.68~~	~~3.10~~	~~2.00~~	~~3300~~		~~0.90~~
~~HPSP126A~~	~~126000~~		~~123400~~	~~68100~~	~~9.00~~		~~7.32~~	~~3.00~~	~~2.00~~	~~4300~~		~~0.50~~
~~HPSP126H~~	~~126000~~		~~111700~~	~~59900~~	~~9.60~~		~~7.32~~	~~3.00~~	~~2.00~~	~~4300~~		~~0.35~~
~~HPSP126L~~	~~126000~~		~~128100~~	~~68900~~	~~8.90~~		~~7.68~~	~~3.10~~	~~2.00~~	~~4300~~		~~0.90~~
~~HPSP162A~~	~~162000~~		~~150600~~	~~80200~~	~~8.90~~		~~7.00~~	~~2.90~~	~~2.00~~	~~5400~~		~~0.50~~
~~HPSP162H~~	~~162000~~		~~146400~~	~~77600~~	~~9.40~~		~~7.00~~	~~2.90~~	~~2.00~~	~~5400~~		~~0.35~~
~~HPSP162L~~	~~162000~~		~~148800~~	~~77200~~	~~8.50~~		~~7.00~~	~~2.90~~	~~2.00~~	~~5400~~		~~0.90~~
~~HPSP222A~~	~~222000~~		~~224200~~	~~115400~~	~~8.60~~		~~7.32~~	~~3.00~~	~~2.00~~	~~6400~~		~~0.50~~
~~HPSP222H~~	~~222000~~		~~215900~~	~~115000~~	~~8.80~~		~~7.32~~	~~3.00~~	~~2.00~~	~~6400~~		~~0.35~~
~~HPSP222L~~	~~222000~~		~~227700~~	~~123500~~	~~8.50~~		~~7.32~~	~~3.00~~	~~2.10~~	~~6400~~		~~0.90~~
~~HPSP22A~~	~~22000~~	~~24150~~	~~21600~~	~~11900~~	~~9.60~~	~~10.50~~	~~7.32~~	~~3.00~~	~~2.00~~	~~600~~	~~0.15~~	~~0.50~~
~~HPSP22H~~	~~22000~~	~~24050~~	~~20800~~	~~10900~~	~~11.10~~	~~12.00~~	~~8.40~~	~~3.30~~	~~2.00~~	~~600~~	~~0.20~~	~~0.35~~
~~HPSP22L~~	~~22000~~	~~23390~~	~~22000~~	~~12300~~	~~9.50~~	~~10.00~~	~~7.32~~	~~3.00~~	~~2.00~~	~~600~~	~~0.10~~	~~0.90~~
~~HPSP28A~~	~~28000~~	~~30420~~	~~27500~~	~~15400~~	~~9.60~~	~~10.40~~	~~7.32~~	~~3.00~~	~~2.00~~	~~800~~	~~0.15~~	~~0.50~~
~~HPSP28H~~	~~28000~~	~~30040~~	~~25400~~	~~13900~~	~~11.20~~	~~12.00~~	~~7.32~~	~~3.00~~	~~2.00~~	~~800~~	~~0.20~~	~~0.35~~
~~HPSP28L~~	~~28000~~	~~30800~~	~~28000~~	~~15800~~	~~9.50~~	~~9.90~~	~~7.32~~	~~3.00~~	~~2.00~~	~~800~~	~~0.10~~	~~0.90~~
~~HPSP34A~~	~~34000~~	~~36980~~	~~33500~~	~~18600~~	~~9.60~~	~~10.20~~	~~7.32~~	~~3.00~~	~~2.00~~	~~1100~~	~~0.15~~	~~0.50~~
~~HPSP34H~~	~~34000~~	~~37600~~	~~31100~~	~~18000~~	~~10.70~~	~~12.00~~	~~8.40~~	~~3.30~~	~~2.20~~	~~1100~~	~~0.20~~	~~0.35~~
~~HPSP34L~~	~~34000~~	~~37790~~	~~36300~~	~~19600~~	~~9.50~~	~~9.90~~	~~7.32~~	~~3.00~~	~~2.00~~	~~1100~~	~~0.10~~	~~0.90~~
~~HPSP40A~~	~~40000~~	~~43500~~	~~39600~~	~~22000~~	~~9.60~~	~~10.00~~	~~7.32~~	~~3.00~~	~~2.00~~	~~1200~~	~~0.15~~	~~0.50~~
~~HPSP40H~~	~~40000~~	~~44140~~	~~37200~~	~~20700~~	~~10.30~~	~~12.00~~	~~8.04~~	~~3.20~~	~~2.00~~	~~1200~~	~~0.20~~	~~0.35~~
~~HPSP40L~~	~~40000~~	~~44930~~	~~41400~~	~~24000~~	~~9.50~~	~~9.90~~	~~7.32~~	~~3.00~~	~~2.00~~	~~1200~~	~~0.10~~	~~0.90~~
~~HPSP46A~~	~~46000~~	~~50000~~	~~46200~~	~~25700~~	~~9.60~~	~~10.00~~	~~7.32~~	~~3.00~~	~~2.00~~	~~1600~~	~~0.15~~	~~0.50~~
~~HPSP46H~~	~~46000~~	~~51400~~	~~46500~~	~~25600~~	~~10.40~~	~~12.00~~	~~8.04~~	~~3.20~~	~~2.10~~	~~1600~~	~~0.20~~	~~0.35~~
~~HPSP46L~~	~~46000~~	~~49830~~	~~48100~~	~~26200~~	~~9.50~~	~~9.90~~	~~7.68~~	~~3.10~~	~~2.10~~	~~1600~~	~~0.10~~	~~0.90~~
~~HPSP52A~~	~~52000~~	~~56060~~	~~51300~~	~~28000~~	~~9.60~~	~~10.00~~	~~7.32~~	~~3.00~~	~~2.00~~	~~1700~~	~~0.15~~	~~0.50~~
~~HPSP52H~~	~~52000~~	~~56820~~	~~49300~~	~~28900~~	~~9.90~~	~~12.30~~	~~8.04~~	~~3.20~~	~~2.00~~	~~1700~~	~~0.20~~	~~0.35~~
~~HPSP52L~~	~~52000~~	~~56280~~	~~51400~~	~~30000~~	~~9.50~~	~~9.90~~	~~7.32~~	~~3.00~~	~~2.00~~	~~1700~~	~~0.10~~	~~0.90~~
~~HPSP58A~~	~~58000~~	~~62530~~	~~59000~~	~~33800~~	~~9.60~~	~~10.00~~	~~7.68~~	~~3.10~~	~~2.10~~	~~1800~~	~~0.15~~	~~0.50~~
~~HPSP58H~~	~~58000~~	~~64710~~	~~58000~~	~~31500~~	~~10.10~~	~~12.00~~	~~8.40~~	~~3.30~~	~~2.20~~	~~1800~~	~~0.20~~	~~0.35~~
~~HPSP58L~~	~~58000~~	~~62140~~	~~60000~~	~~33900~~	~~9.50~~	~~9.90~~	~~7.32~~	~~3.00~~	~~2.10~~	~~1800~~	~~0.10~~	~~0.90~~
~~HPSP63A~~	~~63000~~	~~66900~~	~~60800~~	~~34300~~	~~9.60~~	~~10.00~~	~~7.32~~	~~3.00~~	~~2.00~~	~~1900~~	~~0.15~~	~~0.50~~
~~HPSP63H~~	~~63000~~	~~67260~~	~~58900~~	~~32100~~	~~9.70~~	~~10.50~~	~~7.32~~	~~3.00~~	~~2.00~~	~~1900~~	~~0.20~~	~~0.35~~
~~HPSP63L~~	~~63000~~	~~67190~~	~~59400~~	~~32600~~	~~9.50~~	~~9.90~~	~~7.32~~	~~3.00~~	~~2.00~~	~~1900~~	~~0.10~~	~~0.90~~
~~HPSP72A~~	~~72000~~		~~70600~~	~~38200~~	~~9.00~~		~~7.32~~	~~3.00~~	~~2.00~~	~~2400~~		~~0.50~~
~~HPSP72H~~	~~72000~~		~~71600~~	~~44400~~	~~9.50~~		~~7.68~~	~~3.10~~	~~2.00~~	~~2400~~		~~0.35~~
~~HPSP72L~~	~~72000~~		~~72000~~	~~35400~~	~~8.90~~		~~7.32~~	~~3.00~~	~~2.00~~	~~2400~~		~~0.90~~
~~HPSP90A~~	~~90000~~		~~90500~~	~~49300~~	~~9.00~~		~~7.32~~	~~3.00~~	~~2.00~~	~~2600~~		~~0.50~~
~~HPSP90H~~	~~90000~~		~~83400~~	~~54100~~	~~9.40~~		~~7.32~~	~~3.00~~	~~2.10~~	~~2600~~		~~0.35~~
~~HPSP90L~~	~~90000~~		~~88900~~	~~44400~~	~~8.90~~		~~7.32~~	~~3.00~~	~~2.00~~	~~2600~~		~~0.90~~

~~Table NB-11 – ACM WATER LOOP EQUIPMENT LIBRARY~~

~~MODEL~~	~~COOLCAP~~	~~EER~~	~~HEATCAP~~	~~COP~~	~~CFM~~	~~FPI~~
~~WHP007A~~	~~7000~~	~~11.50~~	~~8050~~	~~4.00~~	~~230~~	~~0.50~~
~~WHP007H~~	~~7000~~	~~15.00~~	~~8050~~	~~4.50~~	~~230~~	~~0.35~~
~~WHP007L~~	~~7000~~	~~10.00~~	~~8050~~	~~3.80~~	~~230~~	~~0.85~~
~~WHP009A~~	~~9000~~	~~11.50~~	~~10350~~	~~4.00~~	~~300~~	~~0.50~~
~~WHP009H~~	~~9000~~	~~15.00~~	~~10350~~	~~4.50~~	~~300~~	~~0.35~~
~~WHP009L~~	~~9000~~	~~10.00~~	~~10350~~	~~3.80~~	~~300~~	~~0.85~~
~~WHP012A~~	~~12000~~	~~11.50~~	~~13800~~	~~4.00~~	~~400~~	~~0.50~~
~~WHP012H~~	~~12000~~	~~15.00~~	~~13800~~	~~4.50~~	~~400~~	~~0.35~~
~~WHP012L~~	~~12000~~	~~10.00~~	~~13800~~	~~3.80~~	~~400~~	~~0.85~~
~~WHP015A~~	~~15000~~	~~11.50~~	~~17250~~	~~4.00~~	~~500~~	~~0.50~~
~~WHP015H~~	~~15000~~	~~15.00~~	~~17250~~	~~4.50~~	~~500~~	~~0.35~~
~~WHP015L~~	~~15000~~	~~10.00~~	~~17250~~	~~3.80~~	~~500~~	~~0.85~~
~~WHP018A~~	~~18000~~	~~11.50~~	~~20700~~	~~4.00~~	~~600~~	~~0.50~~
~~WHP018H~~	~~18000~~	~~15.00~~	~~20700~~	~~4.50~~	~~600~~	~~0.35~~
~~WHP018L~~	~~18000~~	~~10.00~~	~~20700~~	~~3.80~~	~~600~~	~~0.85~~
~~WHP024A~~	~~24000~~	~~11.50~~	~~27600~~	~~4.00~~	~~800~~	~~0.50~~
~~WHP024H~~	~~24000~~	~~15.00~~	~~27600~~	~~4.50~~	~~800~~	~~0.35~~
~~WHP024L~~	~~24000~~	~~10.00~~	~~27600~~	~~3.80~~	~~800~~	~~0.85~~
~~WHP030A~~	~~30000~~	~~11.50~~	~~34500~~	~~4.00~~	~~1000~~	~~0.50~~
~~WHP030H~~	~~30000~~	~~15.00~~	~~34500~~	~~4.50~~	~~1000~~	~~0.35~~
~~WHP030L~~	~~30000~~	~~10.00~~	~~34500~~	~~3.80~~	~~1000~~	~~0.85~~
~~WHP036A~~	~~36000~~	~~11.50~~	~~41400~~	~~4.00~~	~~1200~~	~~0.50~~
~~WHP036H~~	~~36000~~	~~15.00~~	~~41400~~	~~4.50~~	~~1200~~	~~0.35~~
~~WHP036L~~	~~36000~~	~~10.00~~	~~41400~~	~~3.80~~	~~1200~~	~~0.85~~
~~WHP042A~~	~~42000~~	~~11.50~~	~~48300~~	~~4.00~~	~~1400~~	~~0.50~~
~~WHP042H~~	~~42000~~	~~15.00~~	~~48300~~	~~4.50~~	~~1400~~	~~0.35~~
~~WHP042L~~	~~42000~~	~~10.00~~	~~48300~~	~~3.80~~	~~1400~~	~~0.85~~
~~WHP048A~~	~~48000~~	~~11.50~~	~~55200~~	~~4.00~~	~~1600~~	~~0.50~~
~~WHP048H~~	~~48000~~	~~15.00~~	~~55200~~	~~4.50~~	~~1600~~	~~0.35~~
~~WHP048L~~	~~48000~~	~~10.00~~	~~55200~~	~~3.80~~	~~1600~~	~~0.85~~
~~WHP060A~~	~~60000~~	~~11.50~~	~~69000~~	~~4.00~~	~~2000~~	~~0.50~~
~~WHP060H~~	~~60000~~	~~15.00~~	~~69000~~	~~4.50~~	~~2000~~	~~0.35~~
~~WHP060L~~	~~60000~~	~~10.00~~	~~69000~~	~~3.80~~	~~2000~~	~~0.85~~
~~WHP072A~~	~~72000~~	~~11.50~~	~~82800~~	~~4.00~~	~~2400~~	~~0.50~~
~~WHP072H~~	~~72000~~	~~15.00~~	~~82800~~	~~4.50~~	~~2400~~	~~0.35~~
~~WHP072L~~	~~72000~~	~~10.50~~	~~82800~~	~~3.80~~	~~2400~~	~~0.85~~
~~WHP084A~~	~~84000~~	~~11.50~~	~~96600~~	~~4.00~~	~~2800~~	~~0.50~~
~~WHP084H~~	~~84000~~	~~15.00~~	~~96600~~	~~4.50~~	~~2800~~	~~0.35~~
~~WHP084L~~	~~84000~~	~~10.50~~	~~96600~~	~~3.80~~	~~2800~~	~~0.85~~
~~WHP096A~~	~~96000~~	~~11.50~~	~~110400~~	~~4.00~~	~~3200~~	~~0.50~~
~~WHP096H~~	~~96000~~	~~15.00~~	~~110400~~	~~4.50~~	~~3200~~	~~0.35~~
~~WHP096L~~	~~96000~~	~~10.50~~	~~110400~~	~~3.80~~	~~3200~~	~~0.85~~
~~WHP108A~~	~~108000~~	~~11.50~~	~~124200~~	~~4.00~~	~~3600~~	~~0.50~~

~~MODEL~~	~~COOLCAP~~	~~EER~~	~~HEATCAP~~	~~COP~~	~~CFM~~	~~FPI~~
~~WHP108H~~	~~108000~~	~~15.00~~	~~124200~~	~~4.50~~	~~3600~~	~~0.35~~
~~WHP108L~~	~~108000~~	~~10.50~~	~~124200~~	~~3.80~~	~~3600~~	~~0.85~~
~~WHP120A~~	~~120000~~	~~11.50~~	~~138000~~	~~4.00~~	~~4000~~	~~0.50~~
~~WHP120H~~	~~120000~~	~~15.00~~	~~138000~~	~~4.50~~	~~4000~~	~~0.35~~
~~WHP120L~~	~~120000~~	~~10.50~~	~~138000~~	~~3.80~~	~~4000~~	~~0.85~~
~~WHP132A~~	~~132000~~	~~11.50~~	~~151800~~	~~4.00~~	~~4400~~	~~0.50~~
~~WHP132H~~	~~132000~~	~~15.00~~	~~151800~~	~~4.50~~	~~4400~~	~~0.35~~
~~WHP132L~~	~~132000~~	~~10.50~~	~~151800~~	~~3.80~~	~~4400~~	~~0.85~~

~~*Table NB-12 – ACM EVAPORATIVE EQUIPMENT LIBRARY*~~

~~Model~~	~~Cfm~~	~~IndirEff~~	~~DirEff~~	~~FPI~~	~~FPIsup~~	~~ACbackUp~~
~~EVAP1000AIB~~	~~1000~~	~~85~~		~~0.696~~	~~0.500~~	~~ACSP58A~~
~~EVAP1000AID~~	~~1000~~	~~85~~	~~78~~	~~0.696~~	~~0.500~~	
~~EVAP1000HIB~~	~~1000~~	~~85~~		~~0.546~~	~~0.240~~	~~ACSP58H~~
~~EVAP1000HID~~	~~1000~~	~~85~~	~~78~~	~~0.546~~	~~0.240~~	
~~EVAP1000LIB~~	~~1000~~	~~85~~		~~0.996~~	~~0.600~~	~~ACSP58L~~
~~EVAP1000LID~~	~~1000~~	~~85~~	~~78~~	~~0.996~~	~~0.600~~	
~~EVAP1300AIB~~	~~1300~~	~~85~~		~~0.696~~	~~0.500~~	~~ACSP63A~~
~~EVAP1300AID~~	~~1300~~	~~85~~	~~78~~	~~0.696~~	~~0.500~~	
~~EVAP1300HIB~~	~~1300~~	~~85~~		~~0.546~~	~~0.240~~	~~ACSP63H~~
~~EVAP1300HID~~	~~1300~~	~~85~~	~~78~~	~~0.546~~	~~0.240~~	
~~EVAP1300LIB~~	~~1300~~	~~85~~		~~0.996~~	~~0.600~~	~~ACSP63L~~
~~EVAP1300LID~~	~~1300~~	~~85~~	~~78~~	~~0.996~~	~~0.600~~	
~~EVAP1500AIB~~	~~1500~~	~~85~~		~~0.696~~	~~0.500~~	~~ACLP007A~~
~~EVAP1500AID~~	~~1500~~	~~85~~	~~78~~	~~0.696~~	~~0.500~~	
~~EVAP1500HIB~~	~~1500~~	~~85~~		~~0.546~~	~~0.240~~	~~ACLP007H~~
~~EVAP1500HID~~	~~1500~~	~~85~~	~~78~~	~~0.546~~	~~0.240~~	
~~EVAP1500LIB~~	~~1500~~	~~85~~		~~0.996~~	~~0.600~~	~~ACLP007L~~
~~EVAP1500LID~~	~~1500~~	~~85~~	~~78~~	~~0.996~~	~~0.600~~	
~~EVAP2000AIB~~	~~2000~~	~~85~~		~~0.696~~	~~0.500~~	~~ACLP007A~~
~~EVAP2000AID~~	~~2000~~	~~85~~	~~78~~	~~0.696~~	~~0.500~~	
~~EVAP2000HIB~~	~~2000~~	~~85~~		~~0.546~~	~~0.240~~	~~ACLP007H~~
~~EVAP2000HID~~	~~2000~~	~~85~~	~~78~~	~~0.546~~	~~0.240~~	
~~EVAP2000LIB~~	~~2000~~	~~85~~		~~0.996~~	~~0.600~~	~~ACLP007L~~
~~EVAP2000LID~~	~~2000~~	~~85~~	~~78~~	~~0.996~~	~~0.600~~	
~~EVAP2500AIB~~	~~2500~~	~~85~~		~~0.696~~	~~0.500~~	~~ACLP007A~~
~~EVAP2500AID~~	~~2500~~	~~85~~	~~78~~	~~0.696~~	~~0.500~~	
~~EVAP2500HIB~~	~~2500~~	~~85~~		~~0.546~~	~~0.240~~	~~ACLP007H~~
~~EVAP2500HID~~	~~2500~~	~~85~~	~~78~~	~~0.546~~	~~0.240~~	
~~EVAP2500LIB~~	~~2500~~	~~85~~		~~0.996~~	~~0.600~~	~~ACLP007L~~
~~EVAP2500LID~~	~~2500~~	~~85~~	~~78~~	~~0.996~~	~~0.600~~	

~~*Table NB-13 – ACM SYSTEM EQUIPMENT LIBRARY*~~

~~MODEL~~	~~COOLCAP~~	~~HEATCAP~~	~~CFM~~	~~FPIcv~~	~~FPIvav~~
~~SYS0025A~~	~~25000~~	~~33929~~	~~893~~	~~0.50~~	~~1.00~~
~~SYS0025H~~	~~25000~~	~~33929~~	~~893~~	~~0.35~~	~~0.75~~
~~SYS0025L~~	~~25000~~	~~33929~~	~~893~~	~~0.90~~	~~1.35~~
~~SYS0038A~~	~~38000~~	~~51571~~	~~1357~~	~~0.50~~	~~1.00~~
~~SYS0038H~~	~~38000~~	~~51571~~	~~1357~~	~~0.35~~	~~0.75~~
~~SYS0038L~~	~~38000~~	~~51571~~	~~1357~~	~~0.90~~	~~1.35~~
~~SYS0050A~~	~~50000~~	~~67857~~	~~1786~~	~~0.50~~	~~1.00~~
~~SYS0050H~~	~~50000~~	~~67857~~	~~1786~~	~~0.35~~	~~0.75~~
~~SYS0050L~~	~~50000~~	~~67857~~	~~1786~~	~~0.90~~	~~1.35~~
~~SYS0063A~~	~~63000~~	~~85500~~	~~2250~~	~~0.50~~	~~1.00~~
~~SYS0063H~~	~~63000~~	~~85500~~	~~2250~~	~~0.35~~	~~0.75~~
~~SYS0063L~~	~~63000~~	~~85500~~	~~2250~~	~~0.90~~	~~1.35~~
~~SYS0075A~~	~~75000~~	~~101786~~	~~2679~~	~~0.50~~	~~1.00~~
~~SYS0075H~~	~~75000~~	~~101786~~	~~2679~~	~~0.35~~	~~0.75~~
~~SYS0075L~~	~~75000~~	~~101786~~	~~2679~~	~~0.90~~	~~1.35~~
~~SYS0088A~~	~~88000~~	~~119429~~	~~3143~~	~~0.50~~	~~1.00~~
~~SYS0088H~~	~~88000~~	~~119429~~	~~3143~~	~~0.35~~	~~0.75~~
~~SYS0088L~~	~~88000~~	~~119429~~	~~3143~~	~~0.90~~	~~1.35~~
~~SYS0100A~~	~~100000~~	~~135714~~	~~3571~~	~~0.50~~	~~1.00~~
~~SYS0100H~~	~~100000~~	~~135714~~	~~3571~~	~~0.35~~	~~0.75~~
~~SYS0100L~~	~~100000~~	~~135714~~	~~3571~~	~~0.90~~	~~1.35~~
~~SYS0125A~~	~~125000~~	~~169643~~	~~4464~~	~~0.50~~	~~1.00~~
~~SYS0125H~~	~~125000~~	~~169643~~	~~4464~~	~~0.35~~	~~0.75~~
~~SYS0125L~~	~~125000~~	~~169643~~	~~4464~~	~~0.90~~	~~1.35~~
~~SYS0188A~~	~~188000~~	~~255143~~	~~6714~~	~~0.50~~	~~1.00~~
~~SYS0188H~~	~~188000~~	~~255143~~	~~6714~~	~~0.35~~	~~0.75~~
~~SYS0188L~~	~~188000~~	~~255143~~	~~6714~~	~~0.90~~	~~1.35~~
~~SYS0250A~~	~~250000~~	~~339286~~	~~8929~~	~~0.50~~	~~1.00~~
~~SYS0250H~~	~~250000~~	~~339286~~	~~8929~~	~~0.35~~	~~0.75~~
~~SYS0250L~~	~~250000~~	~~339286~~	~~8929~~	~~0.90~~	~~1.35~~
~~SYS0380A~~	~~380000~~	~~515714~~	~~13571~~	~~0.50~~	~~1.00~~
~~SYS0380H~~	~~380000~~	~~515714~~	~~13571~~	~~0.35~~	~~0.75~~
~~SYS0380L~~	~~380000~~	~~515714~~	~~13571~~	~~0.90~~	~~1.35~~
~~SYS0500A~~	~~500000~~	~~678571~~	~~17857~~	~~0.50~~	~~1.00~~
~~SYS0500H~~	~~500000~~	~~678571~~	~~17857~~	~~0.35~~	~~0.75~~
~~SYS0500L~~	~~500000~~	~~678571~~	~~17857~~	~~0.90~~	~~1.35~~
~~SYS0625A~~	~~625000~~	~~848214~~	~~22321~~	~~0.50~~	~~1.00~~
~~SYS0625H~~	~~625000~~	~~848214~~	~~22321~~	~~0.35~~	~~0.75~~
~~SYS0625L~~	~~625000~~	~~848214~~	~~22321~~	~~0.90~~	~~1.35~~
~~SYS0750A~~	~~750000~~	~~1017857~~	~~26786~~	~~0.50~~	~~1.00~~
~~SYS0750H~~	~~750000~~	~~1017857~~	~~26786~~	~~0.35~~	~~0.75~~
~~SYS0750L~~	~~750000~~	~~1017857~~	~~26786~~	~~0.90~~	~~1.35~~
~~SYS1000A~~	~~1000000~~	~~1357143~~	~~33000~~	~~0.50~~	~~1.00~~

~~MODEL~~	~~COOLCAP~~	~~HEATCAP~~	~~CFM~~	~~FPlcv~~	~~FPlvav~~
~~SYS1000H~~	~~1000000~~	~~1357143~~	~~33000~~	~~0.35~~	~~0.75~~
~~SYS1000L~~	~~1000000~~	~~1357143~~	~~33000~~	~~0.90~~	~~1.35~~

~~*Table NB-14 - ACM ELECTRICAL CHILLER LIBRARY*~~

~~Model~~	~~CoolCap~~	~~COP~~
~~COOL0180A~~	~~180000~~	~~4.00~~
~~COOL0180H~~	~~180000~~	~~4.20~~
~~COOL0180L~~	~~180000~~	~~3.80~~
~~COOL0240A~~	~~240000~~	~~4.00~~
~~COOL0240H~~	~~240000~~	~~4.20~~
~~COOL0240L~~	~~240000~~	~~3.80~~
~~COOL0300A~~	~~300000~~	~~4.00~~
~~COOL0300H~~	~~300000~~	~~4.20~~
~~COOL0300L~~	~~300000~~	~~3.80~~
~~COOL0360A~~	~~360000~~	~~4.00~~
~~COOL0360H~~	~~360000~~	~~4.20~~
~~COOL0360L~~	~~360000~~	~~3.80~~
~~COOL0480A~~	~~480000~~	~~4.00~~
~~COOL0480H~~	~~480000~~	~~4.20~~
~~COOL0480L~~	~~480000~~	~~3.80~~
~~COOL0900A~~	~~900000~~	~~4.00~~
~~COOL0900H~~	~~900000~~	~~4.20~~
~~COOL0900L~~	~~900000~~	~~3.80~~
~~COOL1200A~~	~~1200000~~	~~4.00~~
~~COOL1200H~~	~~1200000~~	~~4.20~~
~~COOL1200L~~	~~1200000~~	~~3.80~~
~~COOL1800A~~	~~1800000~~	~~4.40~~
~~COOL1800H~~	~~1800000~~	~~4.60~~
~~COOL1800L~~	~~1800000~~	~~4.20~~
~~COOL2100A~~	~~2100000~~	~~4.40~~
~~COOL2100H~~	~~2100000~~	~~4.60~~
~~COOL2100L~~	~~2100000~~	~~4.20~~
~~COOL2400A~~	~~2400000~~	~~4.40~~
~~COOL2400H~~	~~2400000~~	~~4.60~~
~~COOL2400L~~	~~2400000~~	~~4.20~~
~~COOL3000A~~	~~3000000~~	~~4.40~~
~~COOL3000H~~	~~3000000~~	~~4.60~~
~~COOL3000L~~	~~3000000~~	~~4.20~~
~~COOL3600A~~	~~3600000~~	~~5.60~~
~~COOL3600H~~	~~3600000~~	~~5.80~~
~~COOL3600L~~	~~3600000~~	~~5.20~~
~~COOL4200A~~	~~4200000~~	~~5.60~~
~~COOL4200H~~	~~4200000~~	~~5.80~~
~~COOL4200L~~	~~4200000~~	~~5.20~~

~~Table NB-15 – ACM ABSORPTION CHILLER LIBRARY~~

~~Model~~	~~Cooling Capacity~~	~~HIR~~	~~EIR~~
~~ABSOR10180A~~	~~180000~~	~~1.60~~	~~0.0040~~
~~ABSOR10180H~~	~~180000~~	~~1.55~~	~~0.0035~~
~~ABSOR10180L~~	~~180000~~	~~1.65~~	~~0.0045~~
~~ABSOR10240A~~	~~240000~~	~~1.60~~	~~0.0040~~
~~ABSOR10240H~~	~~240000~~	~~1.55~~	~~0.0035~~
~~ABSOR10240L~~	~~240000~~	~~1.65~~	~~0.0045~~
~~ABSOR10300A~~	~~300000~~	~~1.60~~	~~0.0040~~
~~ABSOR10300H~~	~~300000~~	~~1.55~~	~~0.0035~~
~~ABSOR10300L~~	~~300000~~	~~1.65~~	~~0.0045~~
~~ABSOR10360A~~	~~360000~~	~~1.60~~	~~0.0040~~
~~ABSOR10360H~~	~~360000~~	~~1.55~~	~~0.0035~~
~~ABSOR10360L~~	~~360000~~	~~1.65~~	~~0.0045~~
~~ABSOR10480A~~	~~480000~~	~~1.60~~	~~0.0040~~
~~ABSOR10480H~~	~~480000~~	~~1.55~~	~~0.0035~~
~~ABSOR10480L~~	~~480000~~	~~1.65~~	~~0.0045~~
~~ABSOR10900A~~	~~900000~~	~~1.60~~	~~0.0040~~
~~ABSOR10900H~~	~~900000~~	~~1.55~~	~~0.0035~~
~~ABSOR10900L~~	~~900000~~	~~1.65~~	~~0.0045~~
~~ABSOR11200A~~	~~1200000~~	~~1.60~~	~~0.0040~~
~~ABSOR11200H~~	~~1200000~~	~~1.65~~	~~0.0035~~
~~ABSOR11200L~~	~~1200000~~	~~1.55~~	~~0.0045~~
~~ABSOR11800A~~	~~1800000~~	~~1.60~~	~~0.0040~~
~~ABSOR11800H~~	~~1800000~~	~~1.55~~	~~0.0035~~
~~ABSOR11800L~~	~~1800000~~	~~1.65~~	~~0.0045~~
~~ABSOR12100A~~	~~2100000~~	~~1.60~~	~~0.0040~~
~~ABSOR12100H~~	~~2100000~~	~~1.55~~	~~0.0035~~
~~ABSOR12100L~~	~~2100000~~	~~1.65~~	~~0.0045~~
~~ABSOR12400A~~	~~2400000~~	~~1.60~~	~~0.0040~~
~~ABSOR12400H~~	~~2400000~~	~~1.55~~	~~0.0035~~
~~ABSOR12400L~~	~~2400000~~	~~1.65~~	~~0.0045~~
~~ABSOR13000A~~	~~3000000~~	~~1.60~~	~~0.0040~~
~~ABSOR13000H~~	~~3000000~~	~~1.55~~	~~0.0035~~
~~ABSOR13000L~~	~~3000000~~	~~1.65~~	~~0.0045~~
~~ABSOR13600A~~	~~3600000~~	~~1.60~~	~~0.0040~~
~~ABSOR13600H~~	~~3600000~~	~~1.55~~	~~0.0035~~
~~ABSOR13600L~~	~~3600000~~	~~1.65~~	~~0.0045~~
~~ABSOR14200A~~	~~4200000~~	~~1.60~~	~~0.0040~~
~~ABSOR14200H~~	~~4200000~~	~~1.55~~	~~0.0035~~
~~ABSOR14200L~~	~~4200000~~	~~1.65~~	~~0.0045~~
~~ABSOR20180A~~	~~180000~~	~~1.00~~	~~0.0070~~
~~ABSOR20180H~~	~~180000~~	~~1.00~~	~~0.0065~~
~~ABSOR20180L~~	~~180000~~	~~1.00~~	~~0.0075~~
~~ABSOR20240A~~	~~240000~~	~~1.00~~	~~0.0070~~
~~ABSOR20240H~~	~~240000~~	~~1.00~~	~~0.0065~~

~~Model~~	~~Cooling Capacity~~	~~HIR~~	~~EIR~~
~~ABSOR20240L~~	~~240000~~	~~1.00~~	~~0.0075~~
~~ABSOR20360A~~	~~360000~~	~~1.00~~	~~0.0070~~
~~ABSOR20360H~~	~~360000~~	~~1.00~~	~~0.0065~~
~~ABSOR20360L~~	~~360000~~	~~1.00~~	~~0.0075~~
~~ABSOR20480A~~	~~480000~~	~~1.00~~	~~0.0070~~
~~ABSOR20480H~~	~~480000~~	~~1.00~~	~~0.0065~~
~~ABSOR20480L~~	~~480000~~	~~1.00~~	~~0.0075~~
~~ABSOR20900A~~	~~900000~~	~~1.00~~	~~0.0070~~
~~ABSOR20900H~~	~~900000~~	~~1.00~~	~~0.0065~~
~~ABSOR20900L~~	~~900000~~	~~1.00~~	~~0.0075~~
~~ABSOR21200A~~	~~1200000~~	~~1.00~~	~~0.0070~~
~~ABSOR21200H~~	~~1200000~~	~~1.00~~	~~0.0065~~
~~ABSOR21200L~~	~~1200000~~	~~1.00~~	~~0.0075~~
~~ABSOR21800A~~	~~1800000~~	~~1.00~~	~~0.0070~~
~~ABSOR21800H~~	~~1800000~~	~~1.00~~	~~0.0065~~
~~ABSOR21800L~~	~~1800000~~	~~1.00~~	~~0.0075~~
~~ABSOR22100A~~	~~2100000~~	~~1.00~~	~~0.0070~~
~~ABSOR22100H~~	~~2100000~~	~~1.00~~	~~0.0065~~
~~ABSOR22100L~~	~~2100000~~	~~1.00~~	~~0.0075~~
~~ABSOR22400A~~	~~2400000~~	~~1.00~~	~~0.0070~~
~~ABSOR22400H~~	~~2400000~~	~~1.00~~	~~0.0065~~
~~ABSOR22400L~~	~~2400000~~	~~1.00~~	~~0.0075~~
~~ABSOR23000A~~	~~3000000~~	~~1.00~~	~~0.0070~~
~~ABSOR23000H~~	~~3000000~~	~~1.00~~	~~0.0065~~
~~ABSOR23000L~~	~~3000000~~	~~1.00~~	~~0.0075~~
~~ABSOR23600A~~	~~3600000~~	~~1.00~~	~~0.0070~~
~~ABSOR23600H~~	~~3600000~~	~~1.00~~	~~0.0065~~
~~ABSOR23600L~~	~~3600000~~	~~1.00~~	~~0.0075~~
~~ABSOR24200A~~	~~4200000~~	~~1.00~~	~~0.0070~~
~~ABSOR24200H~~	~~4200000~~	~~1.00~~	~~0.0065~~
~~ABSOR24200L~~	~~4200000~~	~~1.00~~	~~0.0075~~
~~ABSORG0180A~~	~~180000~~	~~1.00~~	~~0.0071~~
~~ABSORG0180H~~	~~180000~~	~~1.00~~	~~0.0066~~
~~ABSORG0180L~~	~~180000~~	~~1.00~~	~~0.0076~~
~~ABSORG0240A~~	~~240000~~	~~1.00~~	~~0.0071~~
~~ABSORG0240H~~	~~240000~~	~~1.00~~	~~0.0066~~
~~ABSORG0240L~~	~~240000~~	~~1.00~~	~~0.0076~~
~~ABSORG0360A~~	~~360000~~	~~1.00~~	~~0.0071~~
~~ABSORG0360H~~	~~360000~~	~~1.00~~	~~0.0066~~
~~ABSORG0360L~~	~~360000~~	~~1.00~~	~~0.0076~~
~~ABSORG0480A~~	~~480000~~	~~1.00~~	~~0.0071~~
~~ABSORG0480H~~	~~480000~~	~~1.00~~	~~0.0066~~
~~ABSORG0480L~~	~~480000~~	~~1.00~~	~~0.0076~~
~~ABSORG0900A~~	~~900000~~	~~1.00~~	~~0.0071~~
~~ABSORG0900H~~	~~900000~~	~~1.00~~	~~0.0066~~

~~Model~~	~~Cooling Capacity~~	~~HIR~~	~~EIR~~
~~ABSORG0900L~~	~~900000~~	~~1.00~~	~~0.0076~~
~~ABSORG1200A~~	~~1200000~~	~~1.00~~	~~0.0071~~
~~ABSORG1200H~~	~~1200000~~	~~1.00~~	~~0.0066~~
~~ABSORG1200L~~	~~1200000~~	~~1.00~~	~~0.0076~~
~~ABSORG1800A~~	~~1800000~~	~~1.00~~	~~0.0071~~
~~ABSORG1800H~~	~~1800000~~	~~1.00~~	~~0.0066~~
~~ABSORG1800L~~	~~1800000~~	~~1.00~~	~~0.0076~~
~~ABSORG2100A~~	~~2100000~~	~~1.00~~	~~0.0071~~
~~ABSORG2100H~~	~~2100000~~	~~1.00~~	~~0.0066~~
~~ABSORG2100L~~	~~2100000~~	~~1.00~~	~~0.0076~~
~~ABSORG2400A~~	~~2400000~~	~~1.00~~	~~0.0071~~
~~ABSORG2400H~~	~~2400000~~	~~1.00~~	~~0.0066~~
~~ABSORG2400L~~	~~2400000~~	~~1.00~~	~~0.0076~~
~~ABSORG3000A~~	~~3000000~~	~~1.00~~	~~0.0071~~
~~ABSORG3000H~~	~~3000000~~	~~1.00~~	~~0.0066~~
~~ABSORG3000L~~	~~3000000~~	~~1.00~~	~~0.0076~~
~~ABSORG3600A~~	~~3600000~~	~~1.00~~	~~0.0071~~
~~ABSORG3600H~~	~~3600000~~	~~1.00~~	~~0.0066~~
~~ABSORG3600L~~	~~3600000~~	~~1.00~~	~~0.0076~~
~~ABSORG4200A~~	~~4200000~~	~~1.00~~	~~0.0071~~
~~ABSORG4200H~~	~~4200000~~	~~1.00~~	~~0.0066~~
~~ABSORG4200L~~	~~4200000~~	~~1.00~~	~~0.0076~~

~~*Table NB-16 – ACM TOWER LIBRARY*~~

~~Model~~	~~CoolCap~~
~~TOWER0220~~	~~220000~~
~~TOWER0260~~	~~260000~~
~~TOWER0330~~	~~330000~~
~~TOWER0390~~	~~390000~~
~~TOWER0500~~	~~500000~~
~~TOWER0930~~	~~930000~~
~~TOWER1250~~	~~1250000~~
~~TOWER1870~~	~~1870000~~
~~TOWER2160~~	~~2160000~~
~~TOWER2480~~	~~2480000~~
~~TOWER3100~~	~~3100000~~
~~TOWER3700~~	~~3700000~~
~~TOWER4300~~	~~4300000~~

~~*Table NB-17 – ACM BOILER LIBRARY*~~

~~Model~~	~~Size~~	~~Afue~~
~~BOILER00100A~~	~~100000~~	~~82~~
~~BOILER00100H~~	~~100000~~	~~84~~
~~BOILER00100L~~	~~100000~~	~~80~~
~~BOILER00250A~~	~~250000~~	~~82~~
~~BOILER00250H~~	~~250000~~	~~84~~
~~BOILER00250L~~	~~250000~~	~~80~~
~~BOILER00500A~~	~~500000~~	~~82~~
~~BOILER00500H~~	~~500000~~	~~84~~
~~BOILER00500L~~	~~500000~~	~~80~~
~~BOILER00750A~~	~~750000~~	~~82~~
~~BOILER00750H~~	~~750000~~	~~84~~
~~BOILER00750L~~	~~750000~~	~~80~~
~~BOILER01000A~~	~~1000000~~	~~82~~
~~BOILER01000H~~	~~1000000~~	~~84~~
~~BOILER01000L~~	~~1000000~~	~~80~~
~~BOILER01500A~~	~~1500000~~	~~82~~
~~BOILER01500H~~	~~1500000~~	~~84~~
~~BOILER01500L~~	~~1500000~~	~~80~~
~~BOILER02000A~~	~~2000000~~	~~82~~
~~BOILER02000H~~	~~2000000~~	~~84~~
~~BOILER02000L~~	~~2000000~~	~~80~~
~~BOILER02500A~~	~~2500000~~	~~82~~
~~BOILER02500H~~	~~2500000~~	~~84~~
~~BOILER02500L~~	~~2500000~~	~~80~~
~~BOILER03000A~~	~~3000000~~	~~82~~
~~BOILER03000H~~	~~3000000~~	~~84~~
~~BOILER03000L~~	~~3000000~~	~~80~~

~~*Table NB-18 - ACM VAV BOX SELECTED*~~

~~Test~~	~~System~~	~~Zone~~	~~Model~~
~~A12B13~~	~~SYS-1~~	~~EAST1~~	~~VAV900A~~
~~A12B13~~	~~SYS-1~~	~~EAST2~~	~~VAV1200A~~
~~A12B13~~	~~SYS-1~~	~~NORTH1~~	~~VAV900A~~
~~A12B13~~	~~SYS-1~~	~~NORTH2~~	~~VAV900A~~
~~A12B13~~	~~SYS-1~~	~~SOUTH1~~	~~VAV1500A~~
~~A12B13~~	~~SYS-1~~	~~SOUTH2~~	~~VAV1500A~~
~~A12B13~~	~~SYS-1~~	~~WEST1~~	~~VAV1200A~~
~~A12B13~~	~~SYS-1~~	~~WEST2~~	~~VAV1200A~~
~~A13B06~~	~~SYS-1~~	~~EAST1~~	~~VAV900A~~
~~A13B06~~	~~SYS-1~~	~~EAST2~~	~~VAV1200A~~
~~A13B06~~	~~SYS-1~~	~~NORTH1~~	~~VAV600A~~
~~A13B06~~	~~SYS-1~~	~~NORTH2~~	~~VAV900A~~
~~A13B06~~	~~SYS-1~~	~~SOUTH1~~	~~VAV1200A~~
~~A13B06~~	~~SYS-1~~	~~SOUTH2~~	~~VAV1500A~~
~~A13B06~~	~~SYS-1~~	~~WEST1~~	~~VAV1200A~~
~~A13B06~~	~~SYS-1~~	~~WEST2~~	~~VAV1200A~~
~~A14B16~~	~~SYS-1~~	~~EAST1~~	~~VAV900A~~
~~A14B16~~	~~SYS-1~~	~~EAST2~~	~~VAV900A~~
~~A14B16~~	~~SYS-1~~	~~NORTH1~~	~~VAV600A~~
~~A14B16~~	~~SYS-1~~	~~NORTH2~~	~~VAV900A~~
~~A14B16~~	~~SYS-1~~	~~SOUTH1~~	~~VAV1200A~~
~~A14B16~~	~~SYS-1~~	~~SOUTH2~~	~~VAV1500A~~
~~A14B16~~	~~SYS-1~~	~~WEST1~~	~~VAV900A~~
~~A14B16~~	~~SYS-1~~	~~WEST2~~	~~VAV1200A~~
~~A17B16~~	~~SYS-1~~	~~EAST1~~	~~VAV900A~~
~~A17B16~~	~~SYS-1~~	~~EAST2~~	~~VAV900A~~
~~A17B16~~	~~SYS-1~~	~~NORTH1~~	~~VAV600A~~
~~A17B16~~	~~SYS-1~~	~~NORTH2~~	~~VAV600A~~
~~A17B16~~	~~SYS-1~~	~~SOUTH1~~	~~VAV900A~~
~~A17B16~~	~~SYS-1~~	~~SOUTH2~~	~~VAV900A~~
~~A17B16~~	~~SYS-1~~	~~WEST1~~	~~VAV900A~~
~~A17B16~~	~~SYS-1~~	~~WEST2~~	~~VAV900A~~
~~B11B13~~	~~SYS-1~~	~~EAST1~~	~~VAV1500L~~
~~B11B13~~	~~SYS-1~~	~~EAST2~~	~~VAV2000L~~
~~B11B13~~	~~SYS-1~~	~~NORTH1~~	~~VAV1200L~~
~~B11B13~~	~~SYS-1~~	~~NORTH2~~	~~VAV1200L~~
~~B11B13~~	~~SYS-1~~	~~SOUTH1~~	~~VAV2000L~~
~~B11B13~~	~~SYS-1~~	~~SOUTH2~~	~~VAV2000L~~
~~B11B13~~	~~SYS-1~~	~~WEST1~~	~~VAV2000L~~
~~B11B13~~	~~SYS-1~~	~~WEST2~~	~~VAV2000L~~
~~B12B13~~	~~SYS-1~~	~~EAST1~~	~~VAV2000L~~
~~B12B13~~	~~SYS-1~~	~~EAST2~~	~~VAV2000L~~
~~B12B13~~	~~SYS-1~~	~~NORTH1~~	~~VAV1200L~~

~~Test~~	~~System~~	~~Zone~~	~~Model~~
~~B12B13~~	~~SYS-1~~	~~NORTH2~~	~~VAV1500L~~
~~B12B13~~	~~SYS-1~~	~~SOUTH1~~	~~VAV2000L~~
~~B12B13~~	~~SYS-1~~	~~SOUTH2~~	~~VAV2500L~~
~~B12B13~~	~~SYS-1~~	~~WEST1~~	~~VAV2000L~~
~~B12B13~~	~~SYS-1~~	~~WEST2~~	~~VAV2000L~~
~~B13B13~~	~~SYS-1~~	~~EAST1~~	~~VAV2000L~~
~~B13B13~~	~~SYS-1~~	~~EAST2~~	~~VAV2000L~~
~~B13B13~~	~~SYS-1~~	~~NORTH1~~	~~VAV1200L~~
~~B13B13~~	~~SYS-1~~	~~NORTH2~~	~~VAV1200L~~
~~B13B13~~	~~SYS-1~~	~~SOUTH1~~	~~VAV2500L~~
~~B13B13~~	~~SYS-1~~	~~SOUTH2~~	~~VAV2500L~~
~~B13B13~~	~~SYS-1~~	~~WEST1~~	~~VAV2000L~~
~~B13B13~~	~~SYS-1~~	~~WEST2~~	~~VAV2500L~~
~~B14B06~~	~~SYS-1~~	~~EAST1~~	~~VAV2000H~~
~~B14B06~~	~~SYS-1~~	~~EAST2~~	~~VAV2000H~~
~~B14B06~~	~~SYS-1~~	~~NORTH1~~	~~VAV1200H~~
~~B14B06~~	~~SYS-1~~	~~NORTH2~~	~~VAV1200H~~
~~B14B06~~	~~SYS-1~~	~~SOUTH1~~	~~VAV2000H~~
~~B14B06~~	~~SYS-1~~	~~SOUTH2~~	~~VAV2500H~~
~~B14B06~~	~~SYS-1~~	~~WEST1~~	~~VAV2000H~~
~~B14B06~~	~~SYS-1~~	~~WEST2~~	~~VAV2000H~~
~~B15B16~~	~~SYS-1~~	~~EAST1~~	~~VAV2000H~~
~~B15B16~~	~~SYS-1~~	~~EAST2~~	~~VAV2000H~~
~~B15B16~~	~~SYS-1~~	~~NORTH1~~	~~VAV900H~~
~~B15B16~~	~~SYS-1~~	~~NORTH2~~	~~VAV1200H~~
~~B15B16~~	~~SYS-1~~	~~SOUTH1~~	~~VAV2000H~~
~~B15B16~~	~~SYS-1~~	~~SOUTH2~~	~~VAV2500H~~
~~B15B16~~	~~SYS-1~~	~~WEST1~~	~~VAV2000H~~
~~B15B16~~	~~SYS-1~~	~~WEST2~~	~~VAV2500H~~
~~B21B12~~	~~SYS-1~~	~~EAST1~~	~~VAV1500A~~
~~B21B12~~	~~SYS-1~~	~~EAST2~~	~~VAV1500A~~
~~B21B12~~	~~SYS-1~~	~~NORTH1~~	~~VAV1200A~~
~~B21B12~~	~~SYS-1~~	~~NORTH2~~	~~VAV1200A~~
~~B21B12~~	~~SYS-1~~	~~SOUTH1~~	~~VAV1500A~~
~~B21B12~~	~~SYS-1~~	~~SOUTH2~~	~~VAV2000A~~
~~B21B12~~	~~SYS-1~~	~~WEST1~~	~~VAV2000A~~
~~B21B12~~	~~SYS-1~~	~~WEST2~~	~~VAV2000A~~
~~B22B12~~	~~SYS-1~~	~~EAST1~~	~~VAV1200A~~
~~B22B12~~	~~SYS-1~~	~~EAST2~~	~~VAV1200A~~
~~B22B12~~	~~SYS-1~~	~~NORTH1~~	~~VAV1200A~~
~~B22B12~~	~~SYS-1~~	~~NORTH2~~	~~VAV1200A~~
~~B22B12~~	~~SYS-1~~	~~SOUTH1~~	~~VAV1500A~~
~~B22B12~~	~~SYS-1~~	~~SOUTH2~~	~~VAV1500A~~
~~B22B12~~	~~SYS-1~~	~~WEST1~~	~~VAV1500A~~
~~B22B12~~	~~SYS-1~~	~~WEST2~~	~~VAV1500A~~

~~Test~~	~~System~~	~~Zone~~	~~Model~~
~~B23B12~~	~~SYS-1~~	~~EAST1~~	~~VAV1200A~~
~~B23B12~~	~~SYS-1~~	~~EAST2~~	~~VAV1200A~~
~~B23B12~~	~~SYS-1~~	~~NORTH1~~	~~VAV900A~~
~~B23B12~~	~~SYS-1~~	~~NORTH2~~	~~VAV1200A~~
~~B23B12~~	~~SYS-1~~	~~SOUTH1~~	~~VAV1500A~~
~~B23B12~~	~~SYS-1~~	~~SOUTH2~~	~~VAV1500A~~
~~B23B12~~	~~SYS-1~~	~~WEST1~~	~~VAV1500A~~
~~B23B12~~	~~SYS-1~~	~~WEST2~~	~~VAV1500A~~
~~B24B03~~	~~SYS-1~~	~~EAST1~~	~~VAV1200A~~
~~B24B03~~	~~SYS-1~~	~~EAST2~~	~~VAV1200A~~
~~B24B03~~	~~SYS-1~~	~~NORTH1~~	~~VAV900A~~
~~B24B03~~	~~SYS-1~~	~~NORTH2~~	~~VAV900A~~
~~B24B03~~	~~SYS-1~~	~~SOUTH1~~	~~VAV1200A~~
~~B24B03~~	~~SYS-1~~	~~SOUTH2~~	~~VAV1200A~~
~~B24B03~~	~~SYS-1~~	~~WEST1~~	~~VAV1200A~~
~~B24B03~~	~~SYS-1~~	~~WEST2~~	~~VAV1500A~~
~~C21B10~~	~~SYS-1~~	~~EAST2~~	~~VAV2000A~~
~~C21B10~~	~~SYS-1~~	~~NORTH1~~	~~VAV1500A~~
~~C21B10~~	~~SYS-1~~	~~NORTH2~~	~~VAV1200A~~
~~C21B10~~	~~SYS-1~~	~~SOUTH1~~	~~VAV2500A~~
~~C21B10~~	~~SYS-1~~	~~SOUTH2~~	~~VAV2500A~~
~~C21B10~~	~~SYS-1~~	~~WEST2~~	~~VAV2000A~~
~~C21B10~~	~~SYS-2~~	~~INT1~~	~~VAV600A~~
~~C21B10~~	~~SYS-2~~	~~INT2~~	~~VAV900A~~
~~C22C16~~	~~SYS-1~~	~~ZONE1E~~	~~VAV1500A~~
~~C22C16~~	~~SYS-1~~	~~ZONE1I~~	~~VAV900A~~
~~C22C16~~	~~SYS-1~~	~~ZONE1N~~	~~VAV1200A~~
~~C22C16~~	~~SYS-1~~	~~ZONE1S~~	~~VAV1500A~~
~~C22C16~~	~~SYS-1~~	~~ZONE3I~~	~~VAV900A~~
~~C22C16~~	~~SYS-1~~	~~ZONE3S~~	~~VAV1200A~~
~~C22C16~~	~~SYS-2~~	~~ZONE1W~~	~~VAV1500A~~
~~C22C16~~	~~SYS-2~~	~~ZONE3E~~	~~VAV2000A~~
~~C22C16~~	~~SYS-2~~	~~ZONE3N~~	~~VAV1200A~~
~~C22C16~~	~~SYS-2~~	~~ZONE3W~~	~~VAV2000A~~
~~E21B16~~	~~SYS-1~~	~~EAST1~~	~~VAV1200A~~
~~E21B16~~	~~SYS-1~~	~~EAST2~~	~~VAV1200A~~
~~E21B16~~	~~SYS-1~~	~~INT1~~	~~VAV900A~~
~~E21B16~~	~~SYS-1~~	~~INT2~~	~~VAV900A~~
~~E21B16~~	~~SYS-1~~	~~NORTH1~~	~~VAV600A~~
~~E21B16~~	~~SYS-1~~	~~NORTH2~~	~~VAV900A~~
~~E21B16~~	~~SYS-1~~	~~SOUTH1~~	~~VAV1500A~~
~~E21B16~~	~~SYS-1~~	~~SOUTH2~~	~~VAV1500A~~
~~E21B16~~	~~SYS-1~~	~~WEST1~~	~~VAV1200A~~
~~E21B16~~	~~SYS-1~~	~~WEST2~~	~~VAV1200A~~
~~E22B16~~	~~SYS-1~~	~~EAST1~~	~~VAV1200A~~

~~Test~~	~~System~~	~~Zone~~	~~Model~~
~~E22B16~~	~~SYS-1~~	~~EAST2~~	~~VAV1200A~~
~~E22B16~~	~~SYS-1~~	~~INT1~~	~~VAV900A~~
~~E22B16~~	~~SYS-1~~	~~INT2~~	~~VAV900A~~
~~E22B16~~	~~SYS-1~~	~~NORTH1~~	~~VAV900A~~
~~E22B16~~	~~SYS-1~~	~~NORTH2~~	~~VAV900A~~
~~E22B16~~	~~SYS-1~~	~~SOUTH1~~	~~VAV1500A~~
~~E22B16~~	~~SYS-1~~	~~SOUTH2~~	~~VAV1500A~~
~~E22B16~~	~~SYS-1~~	~~WEST1~~	~~VAV1200A~~
~~E22B16~~	~~SYS-1~~	~~WEST2~~	~~VAV1500A~~
~~E23B16~~	~~SYS-1~~	~~EAST1~~	~~VAV1200A~~
~~E23B16~~	~~SYS-1~~	~~EAST2~~	~~VAV1200A~~
~~E23B16~~	~~SYS-1~~	~~INT1~~	~~VAV900A~~
~~E23B16~~	~~SYS-1~~	~~INT2~~	~~VAV1200A~~
~~E23B16~~	~~SYS-1~~	~~NORTH1~~	~~VAV900A~~
~~E23B16~~	~~SYS-1~~	~~NORTH2~~	~~VAV900A~~
~~E23B16~~	~~SYS-1~~	~~SOUTH1~~	~~VAV1500A~~
~~E23B16~~	~~SYS-1~~	~~SOUTH2~~	~~VAV1500A~~
~~E23B16~~	~~SYS-1~~	~~WEST1~~	~~VAV1500A~~
~~E23B16~~	~~SYS-1~~	~~WEST2~~	~~VAV1500A~~
~~E24B12~~	~~SYS-1~~	~~EAST1~~	~~VAV1200H~~
~~E24B12~~	~~SYS-1~~	~~EAST2~~	~~VAV1200H~~
~~E24B12~~	~~SYS-1~~	~~INT1~~	~~VAV900H~~
~~E24B12~~	~~SYS-1~~	~~INT2~~	~~VAV900H~~
~~E24B12~~	~~SYS-1~~	~~NORTH1~~	~~VAV900H~~
~~E24B12~~	~~SYS-1~~	~~NORTH2~~	~~VAV900H~~
~~E24B12~~	~~SYS-1~~	~~SOUTH1~~	~~VAV2000H~~
~~E24B12~~	~~SYS-1~~	~~SOUTH2~~	~~VAV2000H~~
~~E24B12~~	~~SYS-1~~	~~WEST1~~	~~VAV1500H~~
~~E24B12~~	~~SYS-1~~	~~WEST2~~	~~VAV2000H~~
~~E25B12~~	~~SYS-1~~	~~EAST1~~	~~VAV1200H~~
~~E25B12~~	~~SYS-1~~	~~EAST2~~	~~VAV1500H~~
~~E25B12~~	~~SYS-1~~	~~INT1~~	~~VAV900H~~
~~E25B12~~	~~SYS-1~~	~~INT2~~	~~VAV900H~~
~~E25B12~~	~~SYS-1~~	~~NORTH1~~	~~VAV900H~~
~~E25B12~~	~~SYS-1~~	~~NORTH2~~	~~VAV1200H~~
~~E25B12~~	~~SYS-1~~	~~SOUTH1~~	~~VAV2000H~~
~~E25B12~~	~~SYS-1~~	~~SOUTH2~~	~~VAV2000H~~
~~E25B12~~	~~SYS-1~~	~~WEST1~~	~~VAV1500H~~
~~E25B12~~	~~SYS-1~~	~~WEST2~~	~~VAV2000H~~
~~E26B12~~	~~SYS-1~~	~~EAST1~~	~~VAV1500H~~
~~E26B12~~	~~SYS-1~~	~~EAST2~~	~~VAV1500H~~
~~E26B12~~	~~SYS-1~~	~~INT1~~	~~VAV900H~~
~~E26B12~~	~~SYS-1~~	~~INT2~~	~~VAV1200H~~
~~E26B12~~	~~SYS-1~~	~~NORTH1~~	~~VAV1200H~~
~~E26B12~~	~~SYS-1~~	~~NORTH2~~	~~VAV1200H~~

~~Test~~	~~System~~	~~Zone~~	~~Model~~
~~E26B12~~	~~SYS-1~~	~~SOUTH1~~	~~VAV2000H~~
~~E26B12~~	~~SYS-1~~	~~SOUTH2~~	~~VAV2000H~~
~~E26B12~~	~~SYS-1~~	~~WEST1~~	~~VAV1500H~~
~~E26B12~~	~~SYS-1~~	~~WEST2~~	~~VAV2000H~~
~~F13B12~~	~~SYS-1~~	~~EAST1~~	~~VAV2000H~~
~~F13B12~~	~~SYS-1~~	~~EAST2~~	~~VAV2000H~~
~~F13B12~~	~~SYS-1~~	~~NORTH1~~	~~VAV1200H~~
~~F13B12~~	~~SYS-1~~	~~NORTH2~~	~~VAV1500H~~
~~F13B12~~	~~SYS-1~~	~~SOUTH1~~	~~VAV2000H~~
~~F13B12~~	~~SYS-1~~	~~SOUTH2~~	~~VAV2500H~~
~~F13B12~~	~~SYS-1~~	~~WEST1~~	~~VAV2000H~~
~~F13B12~~	~~SYS-1~~	~~WEST2~~	~~VAV2000H~~
~~F14B12~~	~~SYS-1~~	~~EAST1~~	~~VAV1500H~~
~~F14B12~~	~~SYS-1~~	~~EAST2~~	~~VAV2000H~~
~~F14B12~~	~~SYS-1~~	~~NORTH1~~	~~VAV1200H~~
~~F14B12~~	~~SYS-1~~	~~NORTH2~~	~~VAV1200H~~
~~F14B12~~	~~SYS-1~~	~~SOUTH1~~	~~VAV2000H~~
~~F14B12~~	~~SYS-1~~	~~SOUTH2~~	~~VAV2000H~~
~~F14B12~~	~~SYS-1~~	~~WEST1~~	~~VAV2000H~~
~~F14B12~~	~~SYS-1~~	~~WEST2~~	~~VAV2000H~~
~~G15B03~~	~~SYS-1~~	~~EAST1~~	~~VAV3000A~~
~~G15B03~~	~~SYS-1~~	~~EAST2~~	~~VAV3500A~~
~~G15B03~~	~~SYS-1~~	~~NORTH1~~	~~VAV2000A~~
~~G15B03~~	~~SYS-1~~	~~NORTH2~~	~~VAV2000A~~
~~G15B03~~	~~SYS-1~~	~~SOUTH1~~	~~VAV3500A~~
~~G15B03~~	~~SYS-1~~	~~SOUTH2~~	~~VAV4000A~~
~~G15B03~~	~~SYS-1~~	~~WEST1~~	~~VAV3500A~~
~~G15B03~~	~~SYS-1~~	~~WEST2~~	~~VAV3500A~~
~~G15B03~~	~~SYS-2~~	~~INT1~~	~~VAV300A~~
~~G15B03~~	~~SYS-2~~	~~INT2~~	~~VAV450A~~
~~G16B16~~	~~SYS-1~~	~~EAST1~~	~~VAV600A~~
~~G16B16~~	~~SYS-1~~	~~EAST2~~	~~VAV900A~~
~~G16B16~~	~~SYS-1~~	~~NORTH1~~	~~VAV450A~~
~~G16B16~~	~~SYS-1~~	~~NORTH2~~	~~VAV450A~~
~~G16B16~~	~~SYS-1~~	~~SOUTH1~~	~~VAV900A~~
~~G16B16~~	~~SYS-1~~	~~SOUTH2~~	~~VAV900A~~
~~G16B16~~	~~SYS-1~~	~~WEST1~~	~~VAV900A~~
~~G16B16~~	~~SYS-1~~	~~WEST2~~	~~VAV900A~~
~~G16B16~~	~~SYS-2~~	~~INT1~~	~~VAV1200A~~
~~G16B16~~	~~SYS-2~~	~~INT2~~	~~VAV1500A~~
~~O21B13~~	~~SYS-1~~	~~EAST1~~	~~VAV2000A~~
~~O21B13~~	~~SYS-1~~	~~EAST2~~	~~VAV2000A~~
~~O21B13~~	~~SYS-1~~	~~INT1~~	~~VAV900A~~
~~O21B13~~	~~SYS-1~~	~~INT2~~	~~VAV1200A~~
~~O21B13~~	~~SYS-1~~	~~NORTH1~~	~~VAV1200A~~

~~Test~~	~~System~~	~~Zone~~	~~Model~~
~~O21B13~~	~~SYS-1~~	~~NORTH2~~	~~VAV1500A~~
~~O21B13~~	~~SYS-1~~	~~SOUTH1~~	~~VAV2000A~~
~~O21B13~~	~~SYS-1~~	~~SOUTH2~~	~~VAV2500A~~
~~O21B13~~	~~SYS-1~~	~~WEST1~~	~~VAV2000A~~
~~O21B13~~	~~SYS-1~~	~~WEST2~~	~~VAV2000A~~
~~O22B13~~	~~SYS-1~~	~~EAST1~~	~~VAV2000A~~
~~O22B13~~	~~SYS-1~~	~~EAST2~~	~~VAV2000A~~
~~O22B13~~	~~SYS-1~~	~~INT1~~	~~VAV900A~~
~~O22B13~~	~~SYS-1~~	~~INT2~~	~~VAV1200A~~
~~O22B13~~	~~SYS-1~~	~~NORTH1~~	~~VAV1200A~~
~~O22B13~~	~~SYS-1~~	~~NORTH2~~	~~VAV1500A~~
~~O22B13~~	~~SYS-1~~	~~SOUTH1~~	~~VAV2000A~~
~~O22B13~~	~~SYS-1~~	~~SOUTH2~~	~~VAV2500A~~
~~O22B13~~	~~SYS-1~~	~~WEST1~~	~~VAV2000A~~
~~O22B13~~	~~SYS-1~~	~~WEST2~~	~~VAV2000A~~
~~O23B13~~	~~SYS-1~~	~~EAST1~~	~~VAV2000A~~
~~O23B13~~	~~SYS-1~~	~~EAST2~~	~~VAV2000A~~
~~O23B13~~	~~SYS-1~~	~~INT1~~	~~VAV900A~~
~~O23B13~~	~~SYS-1~~	~~INT2~~	~~VAV1200A~~
~~O23B13~~	~~SYS-1~~	~~NORTH1~~	~~VAV1200A~~
~~O23B13~~	~~SYS-1~~	~~NORTH2~~	~~VAV1500A~~
~~O23B13~~	~~SYS-1~~	~~SOUTH1~~	~~VAV2000A~~
~~O23B13~~	~~SYS-1~~	~~SOUTH2~~	~~VAV2500A~~
~~O23B13~~	~~SYS-1~~	~~WEST1~~	~~VAV2000A~~
~~O23B13~~	~~SYS-1~~	~~WEST2~~	~~VAV2000A~~
~~O24B13~~	~~SYS-1~~	~~EAST1~~	~~VAV2000A~~
~~O24B13~~	~~SYS-1~~	~~EAST2~~	~~VAV2000A~~
~~O24B13~~	~~SYS-1~~	~~INT1~~	~~VAV900A~~
~~O24B13~~	~~SYS-1~~	~~INT2~~	~~VAV1200A~~
~~O24B13~~	~~SYS-1~~	~~NORTH1~~	~~VAV1200A~~
~~O24B13~~	~~SYS-1~~	~~NORTH2~~	~~VAV1500A~~
~~O24B13~~	~~SYS-1~~	~~SOUTH1~~	~~VAV2000A~~
~~O24B13~~	~~SYS-1~~	~~SOUTH2~~	~~VAV2500A~~
~~O24B13~~	~~SYS-1~~	~~WEST1~~	~~VAV2000A~~
~~O24B13~~	~~SYS-1~~	~~WEST2~~	~~VAV2000A~~
~~O41B13~~	~~SYS-1~~	~~EAST1~~	~~VAV2000L~~
~~O41B13~~	~~SYS-1~~	~~EAST2~~	~~VAV2000L~~
~~O41B13~~	~~SYS-1~~	~~INT1~~	~~VAV900L~~
~~O41B13~~	~~SYS-1~~	~~INT2~~	~~VAV1200L~~
~~O41B13~~	~~SYS-1~~	~~NORTH1~~	~~VAV1200L~~
~~O41B13~~	~~SYS-1~~	~~NORTH2~~	~~VAV1500L~~
~~O41B13~~	~~SYS-1~~	~~SOUTH1~~	~~VAV2000L~~
~~O41B13~~	~~SYS-1~~	~~SOUTH2~~	~~VAV2500L~~
~~O41B13~~	~~SYS-1~~	~~WEST1~~	~~VAV2000L~~
~~O41B13~~	~~SYS-1~~	~~WEST2~~	~~VAV2000L~~

~~Test~~	~~System~~	~~Zone~~	~~Model~~
~~O61B11~~	~~SYS-1~~	~~EAST1~~	~~VAV2000A~~
~~O61B11~~	~~SYS-1~~	~~EAST2~~	~~VAV2000A~~
~~O61B11~~	~~SYS-1~~	~~INT1~~	~~VAV900A~~
~~O61B11~~	~~SYS-1~~	~~INT2~~	~~VAV1200A~~
~~O61B11~~	~~SYS-1~~	~~NORTH1~~	~~VAV1200A~~
~~O61B11~~	~~SYS-1~~	~~NORTH2~~	~~VAV1500A~~
~~O61B11~~	~~SYS-1~~	~~SOUTH1~~	~~VAV2000A~~
~~O61B11~~	~~SYS-1~~	~~SOUTH2~~	~~VAV2500A~~
~~O61B11~~	~~SYS-1~~	~~WEST1~~	~~VAV2000A~~
~~O61B11~~	~~SYS-1~~	~~WEST2~~	~~VAV2000A~~
~~O62B11~~	~~SYS-1~~	~~EAST1~~	~~VAV2000A~~
~~O62B11~~	~~SYS-1~~	~~EAST2~~	~~VAV2000A~~
~~O62B11~~	~~SYS-1~~	~~INT1~~	~~VAV900A~~
~~O62B11~~	~~SYS-1~~	~~INT2~~	~~VAV1200A~~
~~O62B11~~	~~SYS-1~~	~~NORTH1~~	~~VAV1200A~~
~~O62B11~~	~~SYS-1~~	~~NORTH2~~	~~VAV1500A~~
~~O62B11~~	~~SYS-1~~	~~SOUTH1~~	~~VAV2000A~~
~~O62B11~~	~~SYS-1~~	~~SOUTH2~~	~~VAV2500A~~
~~O62B11~~	~~SYS-1~~	~~WEST1~~	~~VAV2000A~~
~~O62B11~~	~~SYS-1~~	~~WEST2~~	~~VAV2000A~~
~~O63B11~~	~~SYS-1~~	~~EAST1~~	~~VAV2000A~~
~~O63B11~~	~~SYS-1~~	~~EAST2~~	~~VAV2000A~~
~~O63B11~~	~~SYS-1~~	~~INT1~~	~~VAV900A~~
~~O63B11~~	~~SYS-1~~	~~INT2~~	~~VAV1200A~~
~~O63B11~~	~~SYS-1~~	~~NORTH1~~	~~VAV1200A~~
~~O63B11~~	~~SYS-1~~	~~NORTH2~~	~~VAV1500A~~
~~O63B11~~	~~SYS-1~~	~~SOUTH1~~	~~VAV2000A~~
~~O63B11~~	~~SYS-1~~	~~SOUTH2~~	~~VAV2500A~~
~~O63B11~~	~~SYS-1~~	~~WEST1~~	~~VAV2000A~~
~~O63B11~~	~~SYS-1~~	~~WEST2~~	~~VAV2000A~~
~~O64B11~~	~~SYS-1~~	~~EAST1~~	~~VAV2000A~~
~~O64B11~~	~~SYS-1~~	~~EAST2~~	~~VAV2000A~~
~~O64B11~~	~~SYS-1~~	~~INT1~~	~~VAV900A~~
~~O64B11~~	~~SYS-1~~	~~INT2~~	~~VAV1200A~~
~~O64B11~~	~~SYS-1~~	~~NORTH1~~	~~VAV1200A~~
~~O64B11~~	~~SYS-1~~	~~NORTH2~~	~~VAV1500A~~
~~O64B11~~	~~SYS-1~~	~~SOUTH1~~	~~VAV2000A~~
~~O64B11~~	~~SYS-1~~	~~SOUTH2~~	~~VAV2500A~~
~~O64B11~~	~~SYS-1~~	~~WEST1~~	~~VAV2000A~~
~~O64B11~~	~~SYS-1~~	~~WEST2~~	~~VAV2000A~~
~~O65B11~~	~~SYS-1~~	~~EAST1~~	~~VAV2000A~~
~~O65B11~~	~~SYS-1~~	~~EAST2~~	~~VAV2000A~~
~~O65B11~~	~~SYS-1~~	~~INT1~~	~~VAV900A~~
~~O65B11~~	~~SYS-1~~	~~INT2~~	~~VAV1200A~~
~~O65B11~~	~~SYS-1~~	~~NORTH1~~	~~VAV1200A~~

~~Test~~	~~System~~	~~Zone~~	~~Model~~
~~O65B11~~	~~SYS-1~~	~~NORTH2~~	~~VAV1500A~~
~~O65B11~~	~~SYS-1~~	~~SOUTH1~~	~~VAV2000A~~
~~O65B11~~	~~SYS-1~~	~~SOUTH2~~	~~VAV2500A~~
~~O65B11~~	~~SYS-1~~	~~WEST1~~	~~VAV2000A~~
~~O65B11~~	~~SYS-1~~	~~WEST2~~	~~VAV2000A~~
~~O66B12~~	~~SYS-1~~	~~EAST1~~	~~VAV2000A~~
~~O66B12~~	~~SYS-1~~	~~EAST2~~	~~VAV2000A~~
~~O66B12~~	~~SYS-1~~	~~INT1~~	~~VAV900A~~
~~O66B12~~	~~SYS-1~~	~~INT2~~	~~VAV1200A~~
~~O66B12~~	~~SYS-1~~	~~NORTH1~~	~~VAV1200A~~
~~O66B12~~	~~SYS-1~~	~~NORTH2~~	~~VAV1500A~~
~~O66B12~~	~~SYS-1~~	~~SOUTH1~~	~~VAV2000A~~
~~O66B12~~	~~SYS-1~~	~~SOUTH2~~	~~VAV2500A~~
~~O66B12~~	~~SYS-1~~	~~WEST1~~	~~VAV2000A~~
~~O66B12~~	~~SYS-1~~	~~WEST2~~	~~VAV2000A~~

~~*Table NB-19 – ACM PACKAGE UNITS SELECTED*~~

~~Test~~	~~System~~	~~Model~~
~~A11B13~~	~~SYS-1~~	~~ACSP34L~~
~~A11B13~~	~~SYS-2~~	~~ACSP34L~~
~~A11B13~~	~~SYS-3~~	~~ACSP34L~~
~~A11B13~~	~~SYS-4~~	~~ACSP34L~~
~~A11B13~~	~~SYS-5~~	~~ACSP34L~~
~~A11B13~~	~~SYS-6~~	~~ACSP34L~~
~~A11B13~~	~~SYS-7~~	~~ACSP34L~~
~~A11B13~~	~~SYS-8~~	~~ACSP34L~~
~~A12B13~~	~~SYS-1~~	~~ACLP025A~~
~~A13B06~~	~~SYS-1~~	~~ACLP020A~~
~~A14B16~~	~~SYS-1~~	~~ACLP020A~~
~~A15B03~~	~~SYS-1~~	~~ACSP28L~~
~~A15B03~~	~~SYS-2~~	~~ACSP28L~~
~~A15B03~~	~~SYS-3~~	~~ACSP28L~~
~~A15B03~~	~~SYS-4~~	~~ACSP28L~~
~~A15B03~~	~~SYS-5~~	~~ACSP28L~~
~~A15B03~~	~~SYS-6~~	~~ACSP28L~~
~~A15B03~~	~~SYS-7~~	~~ACSP28L~~
~~A15B03~~	~~SYS-8~~	~~ACSP28L~~
~~A16B13~~	~~SYS-1~~	~~ACSP28L~~
~~A16B13~~	~~SYS-2~~	~~ACSP28L~~
~~A16B13~~	~~SYS-3~~	~~ACSP28L~~
~~A16B13~~	~~SYS-4~~	~~ACSP28L~~
~~A16B13~~	~~SYS-5~~	~~ACSP28L~~
~~A16B13~~	~~SYS-6~~	~~ACSP28L~~
~~A16B13~~	~~SYS-7~~	~~ACSP28L~~
~~A16B13~~	~~SYS-8~~	~~ACSP28L~~
~~A17B16~~	~~SYS-1~~	~~ACLP015A~~
~~B11B13~~	~~SYS-1~~	~~ACLP040L~~
~~B12B13~~	~~SYS-1~~	~~ACLP040L~~
~~B13B13~~	~~SYS-1~~	~~ACLP040L~~
~~B14B06~~	~~SYS-1~~	~~ACLP040H~~
~~B15B16~~	~~SYS-1~~	~~ACLP040H~~
~~B21B12~~	~~SYS-1~~	~~ACLP030A~~
~~B22B12~~	~~SYS-1~~	~~ACLP025A~~
~~B23B12~~	~~SYS-1~~	~~ACLP030A~~
~~B24B03~~	~~SYS-1~~	~~ACLP025A~~
~~B31D12~~	~~SYS-1~~	~~ACLP007A~~
~~B32D12~~	~~SYS-1~~	~~ACLP007A~~
~~C11A10~~	~~SYS-1~~	~~ACLP015A~~
~~C12A10~~	~~SYS-1~~	~~ACLP015A~~
~~C13A10~~	~~SYS-1~~	~~ACLP025A~~
~~C14A10~~	~~SYS-1~~	~~ACLP010A~~

~~Test~~	~~System~~	~~Model~~
~~C15A10~~	~~SYS-1~~	~~ACLP010A~~
~~C21B10~~	~~SYS-1~~	~~ACLP030A~~
~~C21B10~~	~~SYS-2~~	~~ACSP46A~~
~~C21B10~~	~~SYS-3~~	~~HEAT045A~~
~~C21B10~~	~~SYS-4~~	~~HEAT063A~~
~~D11D12~~	~~SYS-1~~	~~ACSP63A~~
~~D12D12~~	~~SYS-1~~	~~ACSP63A~~
~~D13D07~~	~~SYS-1~~	~~ACSP52A~~
~~D14D07~~	~~SYS-1~~	~~ACSP52A~~
~~E11D16~~	~~SYS-1~~	~~ACSP22A~~
~~E12D16~~	~~SYS-1~~	~~ACSP28A~~
~~E13D16~~	~~SYS-1~~	~~ACSP28A~~
~~E14D14~~	~~SYS-1~~	~~ACSP40A~~
~~E15D14~~	~~SYS-1~~	~~ACSP40A~~
~~E16D14~~	~~SYS-1~~	~~ACSP52A~~
~~E21B16~~	~~SYS-1~~	~~ACLP025A~~
~~E22B16~~	~~SYS-1~~	~~ACLP030A~~
~~E23B16~~	~~SYS-1~~	~~ACLP030A~~
~~E24B12~~	~~SYS-1~~	~~ACLP030H~~
~~E25B12~~	~~SYS-1~~	~~ACLP040H~~
~~E26B12~~	~~SYS-1~~	~~ACLP040H~~
~~F13B12~~	~~SYS-1~~	~~ACLP040H~~
~~F14B12~~	~~SYS-1~~	~~ACLP040H~~
~~G11A11~~	~~SYS-1~~	~~ACLP025A~~
~~G12A11~~	~~SYS-1~~	~~ACLP007A~~
~~G15B03~~	~~SYS-1~~	~~ACLP015A~~
~~G15B03~~	~~SYS-2~~	~~ACLP007A~~
~~G16B16~~	~~SYS-1~~	~~ACLP060A~~
~~G16B16~~	~~SYS-2~~	~~ACSP22A~~
~~O31A12~~	~~SYS-1~~	~~ACLP015A~~
~~O32A12~~	~~SYS-1~~	~~ACLP010H~~
~~O33A12~~	~~SYS-1~~	~~ACLP010H~~
~~O41B13~~	~~SYS-1~~	~~ACLP040L~~
~~O81A11~~	~~SYS-1~~	~~ACLP015A~~
~~O82A15~~	~~SYS-1~~	~~ACLP015A~~
~~OC1A09~~	~~SYS-1~~	~~NOHVAC~~
~~OC2A09~~	~~SYS-1~~	~~NOHVAC~~
~~OC3A09~~	~~SYS-1~~	~~ACLP015H~~
~~OC4A09~~	~~SYS-1~~	~~ACLP010A~~
~~OC4A09~~	~~SYS-2~~	~~ACLP010A~~

~~*Table NB-20 – ACM WATER LOOP HEAT PUMP SELECTED*~~

~~Test~~	~~System~~	~~Zone~~	~~Model~~
~~O71B12~~	~~SYS-1~~	~~EAST1~~	~~WHP060A~~
~~O71B12~~	~~SYS-1~~	~~EAST2~~	~~WHP060A~~
~~O71B12~~	~~SYS-1~~	~~INT1~~	~~WHP036A~~
~~O71B12~~	~~SYS-1~~	~~INT2~~	~~WHP042A~~
~~O71B12~~	~~SYS-1~~	~~NORTH1~~	~~WHP042A~~
~~O71B12~~	~~SYS-1~~	~~NORTH2~~	~~WHP042A~~
~~O71B12~~	~~SYS-1~~	~~SOUTH1~~	~~WHP072A~~
~~O71B12~~	~~SYS-1~~	~~SOUTH2~~	~~WHP072A~~
~~O71B12~~	~~SYS-1~~	~~WEST1~~	~~WHP060A~~
~~O71B12~~	~~SYS-1~~	~~WEST2~~	~~WHP072A~~

~~*Table NB-21 – ACM EVAPORATIVE COOLING EQUIPMENT SELECTED*~~

~~Test~~	~~System~~	~~Model~~
~~O91A13~~	~~SYS-1~~	~~EVAP2500AIB~~
~~O92A11~~	~~SYS-1~~	~~EVAP2500AID~~
~~O93A11~~	~~SYS-1~~	~~EVAP2500AID~~
~~O94A13~~	~~SYS-1~~	~~EVAP2500AID~~

~~*Table NB-22 – FAN COIL UNITS SELECTED*~~

~~Test~~	~~System~~	~~Zone~~	~~Model~~
~~C22C16~~	~~SYS-3~~	~~ZONE2E~~	~~FC035A~~
~~C22C16~~	~~SYS-3~~	~~ZONE2I~~	~~FC013A~~
~~C22C16~~	~~SYS-3~~	~~ZONE2N~~	~~FC021A~~
~~C22C16~~	~~SYS-3~~	~~ZONE2S~~	~~FC056A~~
~~C22C16~~	~~SYS-3~~	~~ZONE2W~~	~~FC042A~~

~~*Table NB-23 – ACM HEAT PUMP EQUIPMENT SELECTED*~~

~~Test~~	~~System~~	~~Model~~
~~F11A07~~	~~SYS-1~~	~~HPSP126H~~
~~F12A13~~	~~SYS-1~~	~~HPSP162A~~
~~G13A11~~	~~SYS-1~~	~~HPSP222H~~
~~G14A11~~	~~SYS-1~~	~~HPSP90A~~

~~*Table NB-24 – ACM SYSTEM EQUIPMENT SELECTED*~~

~~Test~~	~~System~~	~~Model~~
~~C22C16~~	~~SYS-1~~	~~SYS0250A~~
~~C22C16~~	~~SYS-2~~	~~SYS0250A~~
~~O21B13~~	~~SYS-1~~	~~SYS0500A~~
~~O22B13~~	~~SYS-1~~	~~SYS0500A~~
~~O23B13~~	~~SYS-1~~	~~SYS0500A~~
~~O24B13~~	~~SYS-1~~	~~SYS0500A~~
~~O61B11~~	~~SYS-1~~	~~SYS0625A~~
~~O62B11~~	~~SYS-1~~	~~SYS0625A~~
~~O63B11~~	~~SYS-1~~	~~SYS0625A~~
~~O64B11~~	~~SYS-1~~	~~SYS0625A~~
~~O65B11~~	~~SYS-1~~	~~SYS0625A~~
~~O66B12~~	~~SYS-1~~	~~SYS0500A~~

~~*Table NB-25 – ACM CENTRAL COOLING EQUIPMENT SELECTED*~~

~~Test~~	~~Model~~
~~C22C16~~	~~COOL0900A~~
~~C22C16~~	~~TOWER0930~~
~~O21B13~~	~~COOL0480A~~
~~O21B13~~	~~TOWER0930~~
~~O22B13~~	~~COOL0480A~~
~~O22B13~~	~~TOWER0930~~
~~O23B13~~	~~COOL0480A~~
~~O23B13~~	~~TOWER0930~~
~~O24B13~~	~~COOL0480A~~
~~O24B13~~	~~TOWER0930~~
~~O61B11~~	~~ABSOR10480A~~
~~O61B11~~	~~TOWER1250~~
~~O62B11~~	~~ABSOR20480A~~
~~O62B11~~	~~TOWER0930~~
~~O63B11~~	~~ABSORG0480A~~
~~O63B11~~	~~TOWER0930~~
~~O64B11~~	~~COOL0480A~~
~~O64B11~~	~~TOWER0930~~
~~O65B11~~	~~COOL0480A~~
~~O65B11~~	~~TOWER0930~~
~~O66B12~~	~~COOL0480A~~
~~O66B12~~	~~TOWER0930~~
~~O71B12~~	~~TOWER0220~~
~~O71B12~~	~~TOWER0930~~
~~O71B12~~	~~TOWER4300~~

~~*Table NB-26 – ACM BOILER SELECTION*~~

~~Test~~	~~Model~~
~~A12B13~~	~~BOILER00250A~~
~~A13B06~~	~~BOILER00250A~~
~~A14B16~~	~~BOILER00250A~~
~~A17B16~~	~~BOILER00250A~~
~~B11B13~~	~~BOILER00500L~~
~~B12B13~~	~~BOILER00500L~~
~~B13B13~~	~~BOILER00500L~~
~~B14B06~~	~~BOILER00250H~~
~~B15B16~~	~~BOILER00250H~~
~~B21B12~~	~~BOILER00250A~~
~~B22B12~~	~~BOILER00250A~~
~~B23B12~~	~~BOILER00250A~~
~~B24B03~~	~~BOILER00250A~~
~~C21B10~~	~~NOBOILER~~
~~C22C16~~	~~BOILER01000A~~
~~E21B16~~	~~BOILER00250A~~
~~E22B16~~	~~BOILER00250A~~
~~E23B16~~	~~BOILER00500A~~
~~E24B12~~	~~BOILER00250H~~
~~E25B12~~	~~BOILER00250H~~
~~E26B12~~	~~BOILER00250H~~
~~F13B12~~	~~NOBOILER~~
~~F14B12~~	~~NOBOILER~~
~~G15B03~~	~~NOBOILER~~
~~G16B16~~	~~NOBOILER~~
~~O21B13~~	~~BOILER00500A~~
~~O22B13~~	~~BOILER00500A~~
~~O23B13~~	~~BOILER00500A~~
~~O24B13~~	~~BOILER00500A~~
~~O41B13~~	~~BOILER00500L~~
~~O61B11~~	~~BOILER01500A~~
~~O62B11~~	~~BOILER00750A~~
~~O63B11~~	~~BOILER00500A~~
~~O64B11~~	~~BOILER00500A~~
~~O65B11~~	~~BOILER00500A~~
~~O66B12~~	~~BOILER00500A~~
~~O71B12~~	~~BOILER00500A~~

Nonresidential ACM Appendix C – 2008

NACM Appendix ~~H~~C – Test Nonresidential Air Distribution Systems

CASE CODE	Input Assumptions for Non-Residential Duct Systems		
	Total duct Leakage, %	Supply duct R Value	Return duct R value
1001	22	4.2	4.2
1002	22	8	8
1003	8	4.2	4.2
1004	8	8	8

Nonresidential ACM Appendix D – 2008

NACM Appendix D – Calculation of Distribution Efficiency of Single-Zone Nonresidential Air Distribution Systems in Buffer Spaces or Outdoors

D1 Purpose and Scope

NACM Appendix D ~~NACM NG~~ contains procedures for ~~measuring the air leakage~~ calculating seasonal air distribution efficiency in single zone, nonresidential air distribution systems ~~and for calculating the annual and hourly duct system efficiency for energy calculations~~. ~~-~~The methods described here apply to single zone, constant volume heating and air conditioning systems serving zones with 5000 ft^2 of floor area or less, with duct systems located in unconditioned or semi-conditioned buffer spaces or outdoors. These calculations apply to new buildings or new air conditioning systems applied to existing buildings.

Section 144(k) ~~of the Standards~~ sets a prescriptive requirement for HERS rater diagnostically tested and field verified duct sealing for duct systems that meet the following criteria (note this is a subset of the duct systems for which the compliance software calculations shall be applied):

1. Connected to constant volume, single zone, air conditioners, heat pumps or furnaces, and
2. Serving less than 5,000 square feet of floor area; and
3. Having more than 25 percent~~%~~ duct surface area located in one or more of the following spaces:
   A. Outdoors, or

B. In a space directly under a roof where the U-factor of the roof is greater than the U-factor of the ceiling, or

   C. In a space directly under a roof with fixed vents or openings to the outside or unconditioned spaces, or
   D. In an unconditioned crawlspace; or
   E. In other unconditioned spaces.

This requirement applies to new buildings and to alterations. Section 149(b)1.D sets a requirement for HERS rater diagnostically tested and field verified duct sealing for alterations of existing buildings where a new duct system is being installed or an existing duct system is being replaced for duct systems meeting the same criteria. Section 149(b)1.E sets a requirement for HERS rater diagnostically tested and field verified duct sealing for existing duct systems in duct systems meeting the same criteria when the space conditioning system is being installed or replaced, including replacement or installation of an air handler, cooling or heating coil, or furnace heat exchanger. Section 124 sets a mandatory minimum duct insulation requirement of R-8 for duct systems meeting the same criteria.

There are two calculation procedures to determine HVAC system air distribution (duct) efficiency using either: 1) default input assumptions, or 2) values based on HERS rater diagnostic testing and field verification. Duct efficiencies shall be calculated for each hour of the year according to the procedure in Nonresidential ACM Appendix ~~N~~D. The compliance software shall require the user to choose values for the following parameters to calculate duct efficiencies: duct insulation level and duct leakage level.

For duct systems in new buildings and additions meeting the ~~section~~§ 144(k) criteria, the compliance software shall assume R-8 duct insulation and duct leakage of 8 percent~~%~~ of fan flow for the standard design. For the proposed design the same R-8 duct insulation value shall be used since that is a mandatory requirement. When the documentation author specifies duct sealing, which requires HERS rater field verification and diagnostic testing, the proposed design for duct leakage shall be the same as the standard design. If the

documentation does not specify duct sealing, the proposed design shall be the default value for duct leakage of 36 percent~~%~~ of fan flow.

For new or replacement duct systems in existing buildings meeting the ~~Section~~§ 144(k) criteria, the compliance software shall assume R-8 duct insulation for the new or replaced ducts, and if the new or replaced ducts make up only a portion of the duct system, the compliance software shall assume R-4.2 duct insulation for the existing ducts. The proposed design shall use the same R-8 duct insulation for the new or replaced ducts and the actual installed duct insulation for the existing ducts. The compliance softwareshall assume duct leakage of 17 percent~~%~~ of fan flow for the standard design for new or replacement duct systems, including existing portions of the duct system. When the documentation author specifies duct sealing meeting the requirements of ~~Section~~§ 149(b)1.D, including HERS rater field verification and diagnostic testing, the proposed design for duct leakage shall be the same as the standard design. If the documentation does not specify duct sealing, the proposed design shall be the default value of duct leakage of 36 percent~~%~~ of fan flow.

For existing duct systems in existing buildings meeting the ~~Section~~§ 144(k) criteria, the compliance software shall assume R-4.2 duct insulation and duct leakage of 17 percent~~%~~ of fan flow. The proposed design shall assume either R-4.2 duct insulation or the actual installed duct insulation. The compliance software shall assume duct leakage of 17 percent~~%~~ of fan flow for the standard design for new or replacement duct systems, including existing portions of the duct system. When the documentation author specifies duct sealing meeting the requirements of ~~Section~~§ 149(b)1.E, including HERS rater field verification and diagnostic testing, the proposed design for duct leakage shall be the same as the standard design. If the documentation does not specify duct sealing, the proposed design shall be the default value for duct leakage of 36 percent~~%~~ of fan flow.

For duct systems for single-zone individual packaged equipment serving 5000 ft^2 or less via ductwork that is installed in spaces that are not directly conditioned, which do not meet the ~~Section~~§ 144(k) criteria, the compliance softwareshall assume R4.2 duct insulation for the standard design. The proposed design shall assume either R4.2 or the actual installed duct insulation. The compliance software shall assume the default value for duct leakage of 36 percent~~%~~ of fan flow. When the documentation author specifies duct sealing, including HERS rater field verification and diagnostic testing, the proposed design shall assume duct leakage of 8 percent~~%~~ of fan flow for duct systems in new buildings and additions meeting the duct leakage requirements of ~~Section~~§ 144(k), and duct leakage of 17 percent~~%~~ for duct systems in existing buildings meeting the duct leakage requirements of ~~Sections~~§ 149(b)1.D or 149(b)1.E.

The compliance software shall automatically determine whether duct systems are for single-zone individual packaged equipment serving 5000 ft^2 or less via ductwork that is installed in spaces that are not directly conditioned, and whether such duct systems meet the criteria of ~~Section~~§ 144(k). This determination shall be made based on inputs required for analyzing other HVAC features or inputs created especially to make this determination. The compliance software shall automatically use the following values from the description of the proposed design when calculating the distribution system (duct) efficiency:

- Number of stories
- Building Conditioned Floor Area
- Building Volume
- Outdoor summer and winter design temperatures for each climate zone

When more than one HVAC system serves the building, the HVAC distribution efficiency is determined for each system and is applied to the energy consumption of each system.

Duct sealing shall be listed as *HERS Verification Required* features on the *Performance Certificate of Compliance* (PERF-1) and the *Mechanical Compliance Summary* (MECH-1-C), and Air Distribution Acceptance (MECH-5-A). Field verification and diagnostic testing constitutes “eligibility and installation criteria” for duct sealing. Field verification and diagnostic testing of duct sealing shall be described in the *Compliance Supplement*.

The calculation procedures rely on inputs of duct surface area and duct leakage that are field verified; refer to Reference Nonresidential Appendix NA2~~5~~ for field verification and diagnostic testing procedures.

D2 Definitions

aerosol sealant closure system: A method of sealing leaks by blowing aerosolized sealant particles into the duct system which must include minute-by-minute documentation of the sealing process.

***buffer space*:** an unconditioned or indirectly conditioned space located between a ceiling and the roof.

cool roofing products: a roofing material with high thermal emittance and high solar reflectance, or lower thermal emittance and exceptionally high solar reflectance as specified in ~~Standards~~ § 118 (i) that reduces heat gain through the roof.

delivery effectiveness: The ratio of the thermal energy delivered to the conditioned space and the thermal energy entering the distribution system at the equipment heat exchanger.

distribution system efficiency: The ratio of the thermal energy consumed by the equipment with the distribution system to the energy consumed if the distribution system had no losses or impact on the equipment or building loads.

equipment efficiency: The ratio between the thermal energy entering the distribution system at the equipment heat exchanger and the energy being consumed by the equipment.

***equipment factor*:** F_{equip} is the ratio of the equipment efficiency including the effects of the distribution system to the equipment efficiency of the equipment in isolation.

fan flowmeter device: A device used to measure air flow rates under a range of test pressure differences.

floor area: The floor area of enclosed conditioned space on all floors of a building, as measured at the floor level of the exterior surfaces enclosing the conditioned space.

***~~F~~flow capture hood*:** A device used to capture and measure the airflow at a register.

***load factor*:** F_{load} is the ratio of the building energy load without including distribution effects to the load including distribution system effects.

***pressure pan*:** a device used to seal individual forced air system registers and to measure the static pressure from the register.

***recovery factor*:** F_{recov} is the fraction of energy lost from the distribution system that enters the conditioned space.

thermal regain: The fraction of delivery system losses that are returned to the building.

D3 Nomenclature

a_r = duct leakage factor (1-return leakage) for return ducts

a_s = duct leakage factor (1-supply leakage) for supply ducts

$A_{duct,buffer}$ = total supply plus return duct area in buffer space, ft^2

$A_{duct,outdoor}$ = total supply plus return duct area located outdoors, ft^2

$A_{duct,n}$ = total supply plus return duct area in space n, ft^2

A_{floor} = conditioned floor area of building , ft^2

$A_{r,buffer}$ = return duct surface area in buffer space, ft^2

$A_{r,total}$ = total return duct surface area, ft^2

$A_{s,buffer}$ = supply duct surface area in buffer space, ft^2

$A_{s,total}$ = total supply duct surface area, ft^2

A_{walls} = area of buffer space exterior walls, ft^2

A_{roof} = area of buffer space roof, ft^2

B_r = conduction fraction for return

B_s = conduction fraction for supply

C_p = specific heat of air = 0.24 Btu/(lb·°F)

C_{DT}, C_0, C_R, C_L regression coefficients for hourly model

DE = delivery effectiveness

$DE_{seasonal}$ = seasonal delivery effectiveness

E_{equip} = rate of energy exchanged between equipment and delivery system, Btu/hour

E_{hr} = hourly HVAC system energy input (kW for electricity, therms for gas)

$F_{cycloss}$ = cyclic loss factor

F_{equip} = load factor for equipment

F_{leak} = fraction of system fan flow that leaks out of supply or return ducts

F_{load} = load factor for delivery system

F_{recov} = thermal loss recovery factor

F_{regain} = thermal regain factor

h_o = outside roof surface convection coefficient, = 3.4 Btu/hr ft^2°F

I_{hor} = global solar radiation on horizontal surface, Btu/hr ft^2

K_r = return duct surface area coefficient

K_s = supply duct surface area coefficient

N_{story} = number of stories of the building

P_{sp} = pressure difference between supply plenum and conditioned space [Pa]

P_{test} = test pressure for duct leakage [Pa]

Q_{buffer} = buffer space infiltration rate, cfm

Q_e = Flow through air handler at 400 cfm/rated ton with rated tons defined by unit scheduled capacity at the conditions the unit's ARI rating standard from Section 112 of the Standard. Airflow through heating only furnaces shall be based on a 21.7 cfm/kBtuh rated output capacity.

$Q_{total,25}$ = total duct leakage at 25 Pascal, cfm

R_r = thermal resistance of return duct, h ft^2 °F/Btu

R_s = thermal resistance of supply duct, h ft^2 °F/Btu

$T_{amb,cool}$ = cooling season ambient temperature, °F

$T_{amb,heat}$ = heating season ambient temperature, °F

$T_{amb,r}$ = ambient temperature for return, °F

$T_{amb,s}$ = ambient temperature for supply, °F

T_{in} = temperature of indoor air, °F

T_{solair} = sol-air temperature, °F

T_{sp} = supply plenum air temperature, °F

UA_c = UA value for the interface between the conditioned space and the buffer space, Btu/°F

UA_{walls} = UA value for the buffer space exterior walls, Btu/°F

UA_{roof} = UA value for the buffer space exterior roof, Btu/°F

UA_c = UA value for the interface between the conditioned space and the buffer space, Btu/°F

ZLC_c = zone loss coefficient for the interface between the conditioned space and the buffer space, Btu/°F

ZLC_{total} = sum of all the zone loss coefficients for the buffer space , Btu/°F

α = solar absorptivity of roof, = 0.70 for standard roof; 0.45 for cool roof, 0.0 for ducts located outdoors

ΔT_e = temperature rise across heat exchanger, °F

ΔT_r = temperature difference between indoors and the ambient for the return, °F

ΔT_s = temperature difference between indoors and the ambient for the supply, °F

ΔT_{sky} = reduction of sol-air temperature due to sky radiation, = 6.5°F for standard roof and cool roof, 0.0°F for ducts located outdoors, °F.

$\Delta T_{sol,hr}$ = hourly difference between sol-air and indoor temperatures, °F

$\Delta T_{sol,\ season}$ = energy weighted seasonal average difference between sol-air and indoor temperatures, °F

$\eta_{adj,hr}$ = hourly distribution efficiency adjustment factor

$\eta_{dist,seasonal}$ = seasonal distribution system efficiency

$\eta_{dist,hr}$ = hourly distribution system efficiency

ρ = density of air = 0.075, lb/ft^3

D4 ~~Air Distribution Diagnostic Measurement and~~ Default Input Assumptions

~~NG.4.1 Instrumentation Specifications~~

~~The instrumentation for the air distribution diagnostic measurements shall conform to the following specifications:~~

~~*NG.4.1.1 Pressure Measurements*~~

~~All pressure measurements shall be measured with measurement systems (i.e. sensor plus data acquisition system) having an accuracy of ± 0.2 Pa. All pressure measurements within the duct system shall be made with static pressure probes.~~

~~*NG.4.1.2 Duct Leakage Measurements*~~

~~The measurement of air flows during duct leakage testing shall have an accuracy of ±3% of measured flow using digital gauges.~~

~~All instrumentation used for duct leakage diagnostic measurements shall be calibrated according to the manufacturer's calibration procedure to conform to the above accuracy requirement. All testers performing diagnostic tests shall obtain evidence from the manufacturer that the equipment meets the accuracy specifications. The evidence shall include equipment model, serial number, the name and signature of the person of the test laboratory verifying the accuracy, and the instrument accuracy. All diagnostic testing equipment is subject to re-calibration when the period of the manufacturer's guaranteed accuracy expires.~~

~~NG.4.2 Apparatus~~

~~*NG.4.2.1 Duct Pressurization*~~

~~The apparatus for fan pressurization duct leakage measurements shall consist of a duct pressurization and flow measurement device meeting the specifications in Section NA5.4.1.2.~~

~~NG.4.3 Procedure~~

The following sections identify input values for building and HVAC system (including ducts) using either default or diagnostic information.

D4.1 Building Information and Defaults

The calculation procedure for determining air distribution efficiencies requires the following building information:

1. climate zone for the building,
2. conditioned floor area,
3. number of stories,
4. areas and U-values of surfaces enclosing space between the roof and a ceiling, and
5. surface area of ductwork if ducts are located outdoors or in multiple spaces.

Using default values rather than diagnostic procedures produce relatively low air distribution-system efficiencies._Default values shall be obtained from following sections:

1. the location of the duct system in Section D4.5 Climate and Duct Ambient Conditions~~NG.4.3.4~~,
2. the surface area and insulation level of the ducts in Sections D4.3~~**Error! Reference source not found.**~~~~NG.4.3.3~~, D4.5~~NG.4.3.4~~ and D4.6~~NG.4.3.6~~,
3. the system fan flow in Section D.4.7~~NG.4.3.7~~, and

4. the leakage of the duct system in Section D4.8~~NG.4.3.8~~.

D4.2 Diagnostic Input

Diagnostic inputs are used for the calculation of improved duct efficiency. The diagnostics include observation of various duct characteristics and measurement of duct leakage and system fan flows as described in Sections D4.5~~NG.4.3.5~~ through D4.8~~NG.4.3.8~~. These observations and measurements replace those assumed as default values.

The diagnostic procedures include:

- Measurement of total duct system leakage as described in Section D4.8~~NG.4.3.8~~.
- Measurement of duct surface area if ducts are located outdoors or in multiple spaces as described in Section D4.3.2~~**Error! Reference source not found.**.4.3.3~~.
- Observation of the insulation level for the supply (R_s) and return (R_r) ducts outside the conditioned space as described in Section D4.6~~NG.4.3.6~~.
- Observation of the presence of a cool roof.
- Observation of the presence of an outdoor air economizer.

D4.3 Duct Surface Area

The supply-side and return-side duct surface areas shall be calculated separately. If the supply or return duct is located in more than onespace, the area of that duct in each space shall be calculated separately. The duct surface area shall be determined using one of the following methods.

D4.3.1 Default Duct Surface Area

The default duct surface area for supply and return shall be calculated as follows:

For supplies:

Equation ND~~G~~-1 $$A_{s,total} = K_s A_{floor}$$

Where K_s (supply duct surface area coefficient) shall be 0.25 for systems serving the top story only, 0.125 for systems serving the top story plus one other, and 0.08 for systems servings three or more stories.

For returns:

Equation ND~~G~~-2 $$A_{r,total} = K_r \quad A_{floor}$$

Where K_r (return duct surface area coefficient) shall be 0.15 for systems serving the top story only, 0.125 for systems serving the top story plus one other, and 0.08 for systems servings three or more stories.

If ducts are located outdoors, the outdoor duct surface area shall be calculated from the duct layout on the plans using measured duct lengths and nominal inside diameters (for round ducts) or inside perimeters (for rectangular ducts) of each outdoor duct run in the building that is within the scope of the calculation procedure. When using the default duct area, outdoor supply duct surface area shall be less than or equal to the default supply duct surface area; outdoor return duct surface area shall be less than or equal to the default return duct surface area.

The surface area of ducts located in the buffer space between ceilings and roofs shall be calculated from:

Equation ND~~G~~-3 $$A_{s,buffer} = A_{s,total} - A_{s,outdoors}$$

Equation ND~~G~~-4 $$A_{r,buffer} = A_{r,total} - A_{r,outdoors}$$

D4.3.2 Measured Duct Surface Area

Measured duct surface areas shall be used when the outdoor duct surface area measured from the plans is greater than default duct surface area for either supply ducts or return ducts. If a duct system passes through multiple spaces that have different ambient temperature conditions as specified in Section D4.5~~.4.3.5~~, the duct surface area shall be measured for each space individually. The duct surface area shall be calculated from measured duct lengths and nominal inside diameters (for round ducts) or inside perimeters (for rectangular ducts) of each duct run located in buffer spaces or outdoors.

D4.4 Duct Location

Duct systems covered by this procedure are those specified in the Standards § 144(k)3.

D4.5 Climate and Duct Ambient Conditions

Duct ambient temperatures for both heating and cooling shall be obtained from Tables ND-1~~G-1~~a to ND-1~~G-1~~e. The duct ambient temperatures for the cool roofs from Table ND1-~~G-1~~c shall be used for ducts located in unconditioned spaces other than attics and outside. Indoor dry-bulb (T_{in}) temperature for cooling is 78°F. The indoor dry-bulb temperature for heating is 70°F.

Table ND-1~~NG-1~~a Assumptions for Duct Ceiling/Roof Space Ambient Temperature, Ceiling Insulation, No roof insulation, Non-vented Attic

Climate zone	Duct Ambient Temperature for Heating, T amb, heat	Duct Ambient Temperature for Cooling, T amb,, cool Standard roof without economizer	Duct Ambient Temperature for Cooling, T amb,, cool Cool roof without economizer	Duct Ambient Temperature for Cooling, T,amb, cool Standard roof with economizer	Duct Ambient Temperature for Cooling, T amb,, cool Cool roof with economizer
1	47.3	78.0	72.4	81.4	75.3
2	41.8	93.2	84.8	97.1	88.2
3	47.8	83.5	77.1	86.6	79.8
4	43.9	89.1	82.0	92.0	84.5
5	46.2	83.8	77.5	86.0	79.3
6	50.8	85.4	79.4	87.3	81.1
7	49.3	86.8	80.7	88.7	82.3
8	47.3	91.3	84.2	93.1	85.9
9	48.7	92.5	85.4	94.4	87.2
10	45.7	95.9	87.9	98.2	90.0
11	43.9	95.5	88.1	98.4	90.5
12	44.2	94.3	86.7	97.3	89.3
13	43.3	100.9	92.5	103.6	94.9
14	37.2	99.0	90.6	102.7	93.8
15	47.2	102.9	95.8	104.3	97.1
16	37.9	92.0	83.8	96.3	87.5

Table N~~D-1~~G-1b Default Assumptions for Duct Ceiling/Roof Space Ambient Temperature, Ceiling Insulation, No roof insulation, Vented Attic

Climate zone	Duct Ambient Temperature for Heating, $T_{amb, heat}$	Duct Ambient Temperature for Cooling, $T_{amb,, cool}$ Standard roof without economizer	Duct Ambient Temperature for Cooling, $T_{amb,, cool}$ Cool roof without economizer	Duct Ambient Temperature for Cooling, $T_{,amb, cool}$ Standard roof with economizer	Duct Ambient Temperature for Cooling, $T_{amb,, cool}$ Cool roof with economizer
1	48.6	73.7	69.8	76.7	72.5
2	43.4	87.9	82.2	91.7	85.7
3	48.9	79.2	74.8	82.1	77.4
4	45.1	84.4	79.5	87.1	81.9
5	47.7	79.7	75.4	81.9	77.3
6	51.8	81.0	76.8	81.0	78.5
7	50.6	82.4	78.1	84.1	79.7
8	48.7	86.4	81.5	88.2	83.2
9	49.3	88.4	83.4	90.2	85.1
10	47.1	90.9	85.4	93.2	87.6
11	44.8	90.9	85.8	93.7	88.3
12	45.2	89.6	84.4	92.5	87.0
13	44.5	95.1	89.3	97.7	91.7
14	38.6	93.7	87.8	97.2	91.0
15	48.4	98.6	93.7	100.1	95.1
16	38.7	86.9	81.1	91.1	84.9

Table ND-1~~G-1~~c Default Assumptions for Duct Ceiling/Roof Space Ambient Temperature, Ceiling Insulation, Roof insulation, Non-vented Attic

Climate zone	Duct Ambient Temperature for Heating, $T_{amb, heat}$	Duct Ambient Temperature for Cooling, $T_{amb,, cool}$ Standard roof without economizer	Duct Ambient Temperature for Cooling, $T_{amb,, cool}$ Cool roof without economizer	Duct Ambient Temperature for Cooling, $T_{,amb, cool}$ Standard roof with economizer	Duct Ambient Temperature for Cooling, $T_{amb,, cool}$ Cool roof with economizer
1	56.4	77.6	74.8	79.9	76.9
2	54.8	86.9	82.8	89.7	85.4
3	56.4	81.1	77.9	83.3	79.9
4	54.6	84.9	81.3	87.0	83.3
5	56.6	81.3	78.2	82.9	79.6
6	57.1	83.9	80.1	85.5	81.6
7	55.7	84.9	81.1	86.5	82.5
8	54.5	88.0	83.6	89.5	85.0
9	59.9	83.6	81.6	84.2	82.1
10	55.9	89.4	85.6	91.2	87.2
11	53.1	89.7	86.1	91.8	87.9
12	53.7	88.7	84.8	90.9	86.8
13	53.6	93.1	89.0	95.2	90.9
14	48.7	91.9	87.6	94.7	90.1
15	56.1	95.9	92.3	97.0	93.4
16	48.5	86.6	82.4	89.6	85.1

Table ND-1~~G-1~~d Default Assumptions for Duct Ceiling/Roof Space Ambient Temperature, Roof Insulation, No Ceiling Insulation, Non-vented Attic

Climate zone	Duct Ambient Temperature for Heating, $T_{amb, heat}$	Duct Ambient Temperature for Cooling, $T_{amb,, cool}$ Standard roof without economizer	Duct Ambient Temperature for Cooling, $T_{amb,, cool}$ Cool roof without economizer	Duct Ambient Temperature for Cooling, $T_{,amb, cool}$ Standard roof with economizer	Duct Ambient Temperature for Cooling, $T_{amb,, cool}$ Cool roof with economizer
1	59.8	78.5	77.3	79.3	78.0
2	59.0	82.5	80.8	83.5	81.6
3	60.1	80.0	78.6	80.7	79.3
4	58.9	81.6	80.1	82.3	80.7
5	60.0	80.0	78.6	80.6	79.1
6	60.4	81.2	79.5	81.8	80.0
7	59.7	81.7	79.9	82.2	80.5
8	58.8	83.1	81.1	83.7	81.7
9	59.9	83.6	81.6	84.2	82.1
10	58.5	83.4	81.8	84.0	82.3
11	58.5	83.7	82.1	84.3	82.7
12	58.3	83.2	81.6	83.8	82.1
13	58.3	85.1	83.3	85.7	83.9
14	54.5	84.5	82.8	85.4	83.5
15	58.6	86.1	84.6	86.5	84.9
16	55.6	82.4	80.7	83.4	81.5

Table ND-1~~G-1~~e Default Assumptions for Duct Ambient Temperature, Ducts Located Outdoors

Climate zone	Duct Ambient Temperature for Heating, $T_{amb, heat}$	Duct Ambient Temperature for Cooling, $T_{amb,, cool}$ Without economizer	Duct Ambient Temperature for Cooling, $T_{amb,, cool}$ With economizer
1	47.7	62.7	65.4
2	42.5	76.0	79.7
3	47.6	68.5	71.3
4	43.5	73.3	75.8
5	47.1	69.5	71.7
6	50.7	70.0	71.8
7	50.2	71.6	73.2
8	48.3	74.6	76.4
9	47.0	78.1	80.0
10	46.7	79.9	82.1
11	42.8	81.3	83.8
12	43.4	79.4	82.0
13	43.0	83.2	85.4
14	36.4	81.8	85.1
15	48.1	90.7	92.2
16	35.7	73.5	78.1

D4.6 Duct Wall Thermal Resistance

D4.6.1 Default Duct Insulation R value

Default duct wall thermal resistance for new buildings is R-8.0, the mandatory requirement for ducts installed in newly constructed buildings, additions and new or replacement ducts installed in existing buildings. Default duct wall thermal resistance for existing ducts in existing buildings is R-4.2. An air film resistance of 0.7 [h ft^2 ^oF/BTU] shall be added to the duct insulation R value to account for external and internal film resistance.

D4.6.2 Diagnostic Duct Wall Thermal Resistance

Duct wall thermal resistance shall be determined from the manufacturer's specification observed during diagnostic inspection. If ducts with multiple R values are installed, the lowest duct R value shall be used. If a duct with a higher R value than 8.0 is installed, the R-value shall be clearly stated on the building plans and a visual inspection of the ducts must be performed to verify the insulation values.

D.4.7 Total Fan Flow

The total fan flow for an air conditioner or a heat pump for **all climate zones** shall be equal to 400 cfm/rated ton with rated tons defined by unit scheduled capacity at the conditions the unit's ARI rating standard from Section 112 of the Standards. Airflow through heating only furnaces shall be based on 21.7 cfm/kBtuh rated output capacity.

D4.8 Duct Leakage

D.4.8.1 Duct Leakage Factor for Delivery Effectiveness Calculations

Default duct leakage factors for the Proposed Design shall be obtained from Table ND-2~~Table NG-2~~, using the "~~not~~ Un~~T~~tested" values.

Duct leakage factors for the Standard Design shall be obtained from Table ND-2~~Table NG-2~~, using the appropriate "Tested" value.

Duct leakage factors shown in Table ND-2~~Table NG-2~~ shall be used in calculations of delivery effectiveness.

Table ND-2~~G-2~~ Duct Leakage Factors

	as = ar =
Untested duct systems	0.82
Sealed and tested duct systems in existing buildings, System tested after HVAC equipment and/or duct installation	0.915
Sealed and tested new duct systems. System tested after HVAC system installation	0.96

~~*NG.4.3.8.2 Diagnostic Duct Leakage*~~

~~Diagnostic duct leakage measurement is used by installers and raters to verify that total leakage meets the criteria for any sealed duct system specified in the compliance documents. Table NG-3 shows the leakage criteria and test procedures that may be used to demonstrate compliance. In addition to the minimum tests shown, existing duct systems may be tested to show they comply with the criteria for new duct systems.~~

~~*Table NG-3 Duct Leakage Tests*~~

~~**Case**~~	~~**User and Application**~~	~~**Leakage criteria, % of total fan flow**~~	~~**Procedure**~~
~~Sealed and tested new duct systems~~	~~Installer Testing~~ ~~HERS Rater Testing~~	~~6%~~	~~NG 4.3.8.2.1~~
~~Sealed and tested altered existing duct systems~~	~~Installer Testing~~ ~~HERS Rater Testing~~	~~15% Total Duct Leakage~~	~~NG 4.3.8.2.1~~
	~~Installer Testing and Inspection~~ ~~HERS Rater Testing and Verification~~	~~60% Reduction in Leakage and Visual Inspection~~	~~NG 4.3.8.2.2~~ ~~RC4.3.6 and RC4.3.7~~
	~~Installer Testing and Inspection~~ ~~HERS Rater Testing and Verification~~	~~Fails Leakage Test but All Accessible Ducts are Sealed And Visual Inspection~~	~~NG 4.3.8.2.3~~ ~~RC4.3.6 and RC4.3.7~~

~~*NG.4.3.8.2.1 Total Duct Leakage Test from Fan Pressurization of Ducts*~~

~~The objective of this procedure is for an installer to determine or a rater to verify the total leakage of a new or altered duct system. The total duct leakage shall be determined by pressurizing both the supply and return ducts to 25 Pascals with all ceiling diffusers/grilles and HVAC equipment installed. When existing ducts are to be altered, this test shall be performed prior to and after duct sealing. The following procedure shall be used for the fan pressurization tests:~~

~~1. Verify that the air handler, supply and return plenums and all the connectors, transition pieces, duct boots and registers are installed. The entire system shall be included in the test.~~

~~2. For newly installed or altered ducts, verify that cloth backed rubber adhesive duct tape has not been used.~~

~~3 Seal all the supply and return registers, except for one return register or the system fan access. Verify that all outside air dampers and /or economizers are sealed prior to pressurizing the system.~~

~~4. Attach the fan flowmeter device to the duct system at the unsealed register or access door.~~

~~5. Install a static pressure probe at a supply.~~

~~6. Adjust the fan flowmeter to produce a 25 Pascal (0.1 in water) pressure difference between the supply duct and the outside or the building space with the entry door open to the outside.~~

~~7. Record the flow through the flowmeter ($Q_{total,25}$) - this is the total duct leakage flow at 25 Pascals.~~

~~8. Divide the leakage flow by the total fan flow and convert to a percentage. If the leakage flow percentage is less than 6% for new duct systems or less than 15% for altered duct systems, the system passes.~~

~~Duct systems that have passed this total leakage test will be sampled by a HERS rater to show compliance.~~

~~*NG.4.3.8.2.2 Leakage Improvement from Fan Pressurization of Ducts*~~

~~For altered existing duct systems which have a higher lekage percentage than the Total Duct leakage criteria in Section NG.4.3.8.2.1, the objective of this test is to show that the original leakage is reduced through duct sealing as specified in Table NG-3. The following procedure shall be used:.~~

~~1. Use the procedure in NG.4.3.8.2.1 to measure the leakage before commencing duct sealing.~~

~~2. After sealing is complete use the same procedure to measure the leakage after duct sealing.~~

~~3. Subtract the sealed leakage from the original leakage and divide the remainder by the original leakage. If the leakage reduction is 60% or greater of the original leakage, the system passes.~~

~~4.Complete the Visual Inspection specified in NG.4.3.8.2.4.~~

~~Duct systems that have passed this leakage reduction test and the visual inspection test will be sampled by a HERS rater to show compliance.~~

~~*N.G.4.3.8.2.3 Sealing of All Accessible Leaks*~~

~~For altered existing duct systems that do not pass the Total Leakage test (NG.4.3.8.2.1), the objective of this test is to show that all accessible leaks are sealed and that excessively damaged ducts have been replaced. The following procedure shall be used:~~

~~1. Complete each of the leakage tests~~

~~2. Complete the Visual Inspection as specified in NG.4.3.8.2.4.~~

~~All duct systems that could not pass either the total leakage test or the leakage improvement test will be tested by a HERS rater to show compliance. This is a sampling rate of 100%.~~

~~*NG.4.3.8.2.4 Visual Inspection of Accessible Duct Sealing*~~

~~For altered existing duct systems that fail to be sealed to 15% of total fan flow, the objective of this inspection is to confirm that all accessible leaks have been sealed and that excessively damaged ducts have been replaced. The following procedure shall be used:~~

~~1. Visually inspect to verify that the following locations have been sealed:~~

- ~~Connections to plenums and other connections to the forced air unit~~
- ~~Refrigerant line and other penetrations into the forced air unit~~
- ~~Air handler door panel (do not use permanent sealing material, metal tape is acceptable)~~
- ~~Register boots sealed to surrounding material~~
- ~~Connections between lengths of duct, as well as connections to takeoffs, wyes, tees, and splitter boxes.~~

~~2. Visually inspect to verify that portions of the duct system that are excessively damaged have been replaced. Ducts that are considered to be excessively damaged are:~~

- ~~Flex ducts with the vapor barrier split or cracked with a total linear split or crack length greater than 12 inches~~
- ~~Crushed ducts where cross-sectional area is reduced by 30% or more~~
- ~~Metal ducts with rust or corrosion resulting in leaks greater than 2 inches in any dimension~~
- ~~Ducts that have been subject to animal infestation resulting in leaks greater than 2 inches in any dimension~~

~~*NG.4.3.8.4 Labeling requirements for tested systems*~~

D4.9 Delivery Effectiveness (DE) Calculations

Seasonal delivery effectiveness shall be calculated using the seasonal design temperatures from Table ND-1 ~~NG-1.~~

D4.9.1 Calculation of Duct Zone Temperatures

The temperatures of the duct zones outside the conditioned space are determined in Section D4.5. ~~NG.4.3.5~~ for seasonal conditions for both heating and cooling.

For heating:

Equation ND~~G~~-5 $$Tamb,s = Tamb,r = Tamb,heat$$

For cooling:

Equation ND~~G~~-6 $$Tamb,s = Tamb,r = Tamb,cool$$

Where

Tamb,heat and Tamb,cool are determined from values in Table ND-1~~Table NG.4.1~~.

If the ducts are not all in the same location, the duct ambient temperature for use in the delivery effectiveness and distribution system efficiency calculations shall be determined using an area weighted average of the duct ambient temperatures for heating and cooling:

Equation ND~~G~~-7 $$T_{amb,heat} = \frac{A_{duct,buffer} \times T_{amb\,heat,buffer} + A_{duct,outdoors} \times T_{amb\,heat,\,outdoors}}{A_{duct,buffer} + A_{duct,outdoors}}$$

Equation ND~~G~~-8 $$T_{amb,cool} = \frac{A_{duct,buffer} \times T_{amb\,cool,buffer} + A_{duct,outdoors} \times T_{amb\,cool,\,outdoors}}{A_{duct,buffer} + A_{duct,outdoors}}$$

where the buffer space ambient temperature shall correspond to the location yielding the lowest seasonal delivery effectiveness.

Alternatively, the duct ambient temperature for use in the delivery effectiveness and distribution system efficiency calculations can be determined using an area weighted average of the duct zone temperatures for heating and cooling in all spaces:

Equation ND~~G~~-9 $$T_{amb,heat} = \frac{A_{duct,1} \times T_{amb\,heat,1} + A_{duct,,2} \times T_{amb\,heat,\,2} + \ldots + A_n \times T_{amb\,heat,\,n}}{A_{duct,1} + A_{duct,2} + \ldots + A_{duct,n}}$$

Equation ND~~G~~-10 $$T_{amb,cool} = \frac{A_{duct,1} \times T_{amb\,cool,1} + A_{duct,,2} \times T_{amb\,cool,\,2} + \ldots + A_n \times T_{amb\,cool,\,n}}{A_{duct,1} + A_{duct,2} + \ldots + A_{duct,n}}$$

D4.9.2 Seasonal Delivery Effectiveness (DE)

The supply and return conduction fractions, B_s and B_r, shall be calculated as follows:

Equation ND~~G~~-11 $$B_s = \exp\left(\frac{-A_{s,out}}{1.08\,Q_e\,R_s}\right)$$

Equation N~~D~~G-12 $$B_r = \exp\left(\frac{-A_{r,out}}{1.08\,Q_e\,R_r}\right)$$

The temperature difference across the heat exchanger in the following equation is used:

for heating:

Equation N~~D~~G-13 $\Delta T_e = 55$

for cooling:

Equation N~~D~~G-14 $\Delta T_e = -20$

The temperature difference between the building conditioned space and the ambient temperature surrounding the supply, ΔT_s, and return, ΔT_r, shall be calculated using the indoor and the duct ambient temperatures.

Equation N~~D~~G-15 $\Delta T_s = T_{in} - T_{amb,s}$

Equation N~~D~~G-16 $\Delta T_r = T_{in} - T_{amb,r}$

The seasonal delivery effectiveness for heating or cooling systems shall be calculated using:

Equation N~~D~~G-17 $$DE_{seasonal} = a_s B_s - a_s B_s (1 - B_r a_r)\frac{\Delta T_r}{\Delta T_e} - a_s(1 - B_s)\frac{\Delta T_s}{\Delta T_e}$$

D4.10 Seasonal Distribution System Efficiency

Seasonal distribution system efficiency shall be calculated using delivery effectiveness, equipment, load, and recovery factors calculated for seasonal conditions.

~~N~~D.4.10.1~~G~~ Equipment Efficiency Factor (F_{equip})

F_{equip} is 1.

D.4.10.2 Thermal Regain (F_{regain})

The reduction in building load due to regain of duct losses shall be calculated using the thermal regain factor.

Equation N~~D~~G-18 $$F_{regain} = \frac{ZLC_c}{ZLC_{total}}$$

where:

Equation N~~D~~G-19 $$ZLC_c = UA_c + 60Q_e(1 - a_r)\rho Cp$$

Equation N~~D~~G-20 $$ZLC_{total} = \sum_{buffer\,spaces\,surfaces} UA + Q_{buffer}\rho Cp + 60Q_e(1 - a_r)\rho Cp$$

Equation N~~D~~G-21 $UA_{buffer\ spaces\ surfaces} = UA_c + UA_{walls} + UA_{roof}$

Equation N~~D~~G-22 $Q_{buffer} = 0.038(60)A_{walls}\rho c_p$ **for non-vented buffer spaces**

Equation N~~D~~G-23 $Q_{buffer} = 0.25(60)A_{roof}\rho c_p$ **for -vented buffer spaces**

Thermal regain for ducts located outdoors shall be equal to 0.0. If the ducts are not all in the same location, the regain shall be determined using an area weighted average of the regain for heating and cooling:

Equation ND~~G~~-24 $$F_{regain} = \frac{A_{duct,1} \times F_{regain,1} + A_{duct,2} \times F_{regain,2} + \ldots + A_{duct,n} \times F_{regain,n}}{A_{duct,1} + A_{duct,2} + \ldots + A_{duct,n}}$$

D4.10.3 Recovery Factor (F_{recov})

The recovery factor, F_{recov}, is calculated based on the thermal regain factor, F_{regain}, and the duct losses without return leakage.

Equation ND~~G~~-25 $$F_{recov} = 1 + F_{regain}\left(\frac{1 - a_s B_s + a_s B_s (1 - B_r)\frac{\Delta T_r}{\Delta T_e} + a_s (1 - B_s)\frac{\Delta T_s}{\Delta T_e}}{DE_{seasonal}}\right)$$

~~N~~D.4.10.4~~G~~ Seasonal Distribution System Efficiency

The seasonal distribution system efficiency shall be calculated using the seasonal delivery effectiveness from section D4.9.2 ~~NG.4.4.2~~, the equipment efficiency factor from section D.4.10.1~~NG.4.5.1~~, and the recovery factor from section D4.10.3~~NG.4.5.3~~. Note that $DE_{seasonal}$, F_{equip}, F_{recov} must be calculated separately for cooling and heating conditions. Distribution system efficiency shall be determined using the following equation:

Equation ND~~G~~-26 $$\eta_{dist,seasonal} = 0.98\, DE_{seasonal}\, F_{equip}\, F_{recov}$$

where 0.98 accounts for the energy losses from heating and cooling the duct thermal mass.

D4.11 Hourly Distribution System Efficiency

The hourly duct efficiency shall be calculated for each hour using the following equation:

Equation ND~~G~~-27 $$\eta_{dist,hr} = \frac{\eta_{dist,seasonal}}{\eta_{adj,hr}}, \quad \eta_{dist,hr} \le 1$$

where the hourly efficiency is calculated from the seasonal efficiency and an hourly efficiency adjustment factor. The hourly distribution efficiency shall be less than or equal to 1.0. The hourly duct efficiency adjustment factor shall be calculated from the following equation:

Equation ND~~G~~-28 $$\eta_{adj,hr} = 1 + C_{DT} \times \left(\Delta T_{sol,hr} - \Delta T_{sol,season}\right)$$

where the hourly efficiency adjustment factor is calculated from the difference between the hourly roof sol-air temperature and the hourly indoor temperature; the difference between the seasonal average difference between the roof sol-air temperature and the indoor temperature; and a constant derived from regression analysis.

The hourly difference between the roof sol-air temperature and the indoor temperature shall be calculated from the following equation:

Equation ND~~G~~-29 $$\Delta T_{sol,hr} = T_{solair,hr} - T_{in,hr}$$

The seasonal difference between the roof sol-air temperature and the indoor temperature shall be a load-weighted average of the hourly roof sol-air temperature and the indoor temperature, and shall be calculated from the following equation:

Equation ND~~G~~-30 $$\Delta T_{sol,season} = \frac{\sum_{season}(T_{solair,hr} - T_{in,hr})E_{hr}}{\sum_{season} E_{hr}}$$

The hourly roof sol-air temperature is a function of the hourly ambient temperature, hourly horizontal solar radiation and the roof surface absorptance; and shall be calculated from the following equation:

Equation ND~~G~~-31 $$T_{solair,hr} = T_{amb,hr} + \left(\frac{\alpha}{h_o}\right) I_{hor,hr} - \Delta T_{sky}$$

The hourly efficiency adjustment factor regression coefficient shall be calculated from the following equation:

Equation ND~~G~~-32 $$C_{DT} = C_0 + {C_R}/{R_s} + C_L Q_{total,25}$$ **; $C_{DT,cooling} \geq 0.0$; $C_{DT,heating} \leq 0.0$**

where coefficients C_o, C_R, and C_L shall be taken from Table ND-3~~Table NG-3~~ according to the season (heating or cooling), and the roof type for ducts in the buffer space (standard or cool roofing products) or duct location (if outdoors). The calculated value of C_{DT} for cooling shall be greater than or equal to zero, and the calculated value of C_{DT} for heating shall be less than or equal to zero.

D4.11.1 Hourly Efficiency Adjustment Regression Coefficients

Table ND-3~~G-4~~ Coefficients

	Cooling			Heating		
	Standard roof	Cool roof	Outdoors	Standard roof	Cool roof	Outdoors
Co	0.000486	0.000538	-0.002763	-0.000430	-0.000418	0.000677
CR	0.002810	0.003207	0.008702	-0.003978	-0.003659	-0.002614
CL	0.002143	0.003386	0.031009	-0.012079	-0.011277	-0.012190

Nonresidential ACM Appendix E – 2008

NACM Appendix E – Algorithm for Energy Use of Distributed Energy Storage Direct-Expansion Air Conditioners

Scope

Distributed energy storage direct-expansion air conditioners (DES/DXAC) may be modeled as an optional capability using the DOE2 function defined below. This optional capability is described in Chapter 3 of the Nonresidential ACM Manual.

```
$
$ This function calculates cooling energy use by ISAC units
$ for packaged systems of types PSZ, PMZS, PVAVS, and PVVT.
$ The supply fan energy calculated by DOE-2 is not changed in this function.

FUNCTION NAME=ISACFunc ..
ASSIGN
      MON=IMO      $ MONTH
      DAY=IDAY $ DAY
      HR=IHR       $ HOUR
      DOY=IDOY $ Day of year (1-365)
      DOW=IDOW $ Day of week (1-7, Sunday=1, Monday=2, ..., Saturday=7)
      SysIdx=NS     $ Index for stepping through SYSTEMs
      SYSTYPE=ICODE $ SYSTEM-TYPE code (PSZ=19, PVAVS=21, PVVT=28)
      NSP=NSP          $ START of the current system data in AA() array
      FON=FON      $ FAN STATUS, 0=OFF, 1= ON
      OAT=DBT      $ OUTSIDE AIR TEMPERATURE
      INILZE=INILZE    $ INITIALIZATION FLAG, 7 DAYS
      QC=QC    $ COOLING LOADS Btu/h
      QH=QH    $ HEATING LOADS Btu/h
      FANKW=FANKW  $ FAN kW
      COOLKW=COOLKW    $ COOLING kW
      CFM=CFM      $ System CFM
      DBMixAir=TM   $ Mix Air dry-bulb temp. F
      WMixAir=WM    $ Mix air humidity ratio. lb.water/lb.air
      Patm=PATM     $ Atmospheric pressure, inch.Hg
      SYSCCAP=COOLING-CAPACITY $ System cooling capacity read from the DOE-2 input file
      SYSCEIR=COOLING-EIR      $ System cooling EIR read from the DOE-2 input file
$  Variables persisting values for all hours
      TANKCAP1=SAVES2          $ Tank remaining capacity in Btu for 1 ISAC tank
      DAYCLHR1=SAVES4          $ Total cooling hours for the previous day
      DAYCLHR=SAVES5           $ Counter of total cooling hours for the current day
      SUMCLKW=F-SYS-VAR1       $ Annual total cooling kWh for DX assuming serving all loads
      SUMCLKWIB=F-SYS-VAR2     $ Annual total cooling kWh for all ISAC systems
      SUMCLKWDX=F-SYS-VAR3     $ Annual total cooling kWh for DX serving part loads
      PEAKCLD=GET-IT-INTO-SYS  $ System peak cooling load in Btu/h
$ Flag to control hourly report generating
      OrgDXHrp = 0             $ Report hourly original DX performance (1=Yes, 0=No) in file fort.50
```

```
      ISACHrp = 0              $ Report hourly ISAC performance (1=Yes, 0=No) in file fort.51

$ The following ISAC unit performance data and operating control depends on the ISAC
$ model number which is selected by user via the ACM interface like EnergyPro

$ Number of ISAC units serving the system. written by ACM tool
      NumIB = 1

  $ Maximum cooling rate of an ISAC unit (btu/hr) <= 7.5 ton (90,000 Btu/h). written by ACM tool
      IBMaxCl = 90000

  $ ISAC condenser unit performance data
      IBClCAP=45               $ Cooling capacity of an ISAC unit (ton-hour)
      TANKUA=15.0              $ Tank surfaces U * Area for calculating cool loss
      ParaCool=0.325           $ Parasitic electrical losses in kW during discharging. pump etc
      ParaStore=0.026          $ Parasitic electrical losses in kW during charging
      ParaIdle=0.007           $ Parasitic electrical losses in kW during idle

  $ ISAC performance curve for condensing unit capacity as a bi-quardratic equations of
  $  outside air temperature and charging completion ratio (SEER 13)
      sngCap0=6.851024
      sngCap1=-0.019319
      sngCap2=-8.24405E-05
      sngCap3=-2.902042
      sngCap4=1.158509
      sngCap5=0.007154

  $ ISAC performance curve for condensing unit EER as a bi-quardratic equations of
  $  outside air temperature and charging completion ratio (SEER 13)
      sngEER0=43.74429
      sngEER1=-0.40191
      sngEER2=0.0008929
      sngEER3=-6.31453
      sngEER4=0.253109
      sngEER5=0.037552

  $ ISAC control parameters
      sngMinCapRatio=0.03      $ If no cooling on previous day and tank cap still more than this,
don't charge
      sngMaxCapRatio=0.995     $ Don't charge tank when tank capacity is more than this
      sngChgOffset=6           $ One of the two variables to calc optimal charging time
      sngChgMult=1.2           $ One of the two variables to calc optimal charging time
      sngChgLatestStop=7       $ ice making must stop by this time
      sngChgEarliestStart=22   $ ice making cannot start before this time, regardless of the
offset/multiplier calc
      fPeakMonth=6             $ First Peak Month
      lPeakMonth=10            $ Last Peak Month
      PStMeltHour=11           $ Peak Month StartMelt Hour (1 to 24)
      OpStMeltHour=7           $ Off-Peak StartMelt Hour (1 to 24)
      ..

CALCULATE ..
      Tmp = (SYSTYPE-19)*(SYSTYPE-20)*(SYSTYPE-21)*(SYSTYPE-28)

C  This function is only used for system types - PSZ, PMZS, PVAVS, and PVVT
      IF(Tmp.NE.0)RETURN
```

```
C  Write hourly report for original DX systems
      IF (INILZE.EQ.1.AND.HR.EQ.1.AND.OrgDXHrp.EQ.1) WRITE(50,100)
100   FORMAT('MN DY HR OAT FON CFM QC QH FKW CLKW')

C  Write hourly report for ISAC Systems
      IF (INILZE.EQ.1.AND.HR.EQ.1.AND.ISACHrp.EQ.1) WRITE(51,110)
110   FORMAT('M D H OAT FON CFM QH FKW TCAP QCHG EER CHR CHR1
     +      COOLKW DXCOOLKW IBCOOLKW QC QCDX QCIB')

C  Do nothing if still in initilization process (7 DAYS)
      IF (INILZE.LT.8) RETURN

C  Assume the ISAC tanks are empty initially
      IF ((MON.EQ.1).AND.(DAY.EQ.1).AND.(HR.EQ.1)) TANKCAP = 0
      IF ((MON.EQ.1).AND.(DAY.EQ.1).AND.(HR.EQ.1)) DAYCLHR1 = 24

C  Convert 1 ISAC tank full cooling capacity from ton-h to Btu
      FULLCAP = IBClCAP * 12000

C  Calc maximum cooling capacity of ISAC system in Btu/h
      MaxIBsCLD = NumIB * IBMaxCl

C  Calc mix air wet-bulb temp. in F
      WBMixAir = WBFS(DBMixAir,WMixAir,Patm)

C  Title 24 default COOL-EIR-FT curves. EIRM1 = CVAL(<COOL-EIR-FT>,EWB,OAT)
      EIRM1 = -0.4354605+0.0499555*WBMixAir-0.0004849*WBMixAir**2
     +  -0.011332*OAT+0.00013441*OAT**2+0.00002016*WBMixAir*OAT

C  Title 24 disables the COOL-EIR-FPLR curve. EIRM2  = CVAL(<COOL-EIR-FPLR>,PLRCC,PLRCC)
      EIRM2  = 1.0

C  Print system data before being modified
      IF (OrgDXHrp.EQ.1) WRITE(50,200) MON,DAY,HR,OAT,FON,CFM,QC,QH,
     +                                 FANKW,COOLKW
200   FORMAT(3F5.0,F6.1,F4.0,3F10.1,3F10.3)
      SUMCLKW = SUMCLKW + COOLKW

C  No space cooling call
      IF (QC.LE.0) GO TO 800

C  Store the peak cooling load for reporting purpose
      IF (QC.GT.PEAKCLD) PEAKCLD = QC

C  ISAC total tank remaining cooling capacity in Btu
      IBsTANKCAP = NumIB * TANKCAP
      IF (IBsTANKCAP.LE.0) QCIB = 0
      IF (IBsTANKCAP.LE.0) QCDX = QC
      IF (IBsTANKCAP.LE.0) GO TO 448

C  Determine first hour to melt ice for cooling
      sngTmp3 = (MON - fPeakMonth) *(lPeakMonth - MON)
      StMeltHr = OpStMeltHour
      IF (sngTmp3.GE.0) StMeltHr = PStMeltHour

C  Check whether ok to melt ice for cooling
```

```
      IF (HR.GE.StMeltHr) GO TO 1968

C  Don't melt ice, delay to hour StMeltHr. Use DX unit to meet the cooling loads instead
      QCIB = 0
      QCDX = QC
      GO TO 448

1968  CONTINUE
C  OK to melt ice for cooling
C  Calc loads for ISAC tanks (QCIB) and DX (QCDX)
      IF (QC.LE.MaxIBsCLD) GO TO 444

C  Cooling loads must be met by both ISAC tanks and DX
      QCDX = QC - MaxIBsCLD
      QCIB = MaxIBsCLD
      IF (IBsTANKCAP.LT.QCIB) QCIB = IBsTANKCAP
      QCDX = QC - QCIB
      GO TO 448

444   CONTINUE
C  Cooling loads can be met by tanks, no need for DX
      QCIB = QC
      IF (IBsTANKCAP.LT.QCIB) QCIB = IBsTANKCAP
      QCDX = QC - QCIB

448   CONTINUE
C  Calc cooling kWh for ISAC and DX
C  DX cooling kW
      DXCOOLKW = QCDX * (SYSCEIR*EIRM1*EIRM2)/3413

C  ISAC units cooling kW.
C  Discharge from ISAC tanks for cooling if capacity available
      IF (QCIB.GT.0) IBCOOLKW = NumIB * ParaCool
      IF (QCIB.EQ.0) IBCOOLKW = NumIB * ParaIdle

C  Update tank cap counting tank cool loss
      IF (QCIB.GT.0) TANKCAP = TANKCAP - QCIB/NumIB - 3412*ParaCool
     +                                 - TANKUA*(OAT-32)
      IF (QCIB.EQ.0) TANKCAP = TANKCAP - TANKUA*(OAT-32)

C  Count total melting hours of the current day
      IF (QCIB.GT.0) DAYCLHR = DAYCLHR + 1

C  Done, go to the end
      GO TO 555

800   CONTINUE
C  No space cooling call
      QCIB = 0
      QCDX = 0
      DXCOOLKW = 0

C  Check whether to charge the tanks
C  If tanks are almost full, don't charge any more
      sngX = sngMaxCapRatio*FULLCAP
      IF (TANKCAP.GE.sngX) GO TO 900
```

```
C  If no cooling on previous day and tank cap still more than 3%, don't charge
      sngTmp1 = sngMinCapRatio*FULLCAP
      IF ((DAYCLHR1.EQ.0).AND.(TANKCAP.GE.sngTmp1)) GO TO 900

C  Charging control strategy
C  Calc the charging start time
      sngChgStartHour = sngChgOffset - DAYCLHR1 * sngChgMult

      IF (sngChgStartHour.GT.0) GO TO 950
C  sngChgStartHour <= 0

      IF (sngChgEarliestStart.GT.12) GO TO 960
C  sngChgEarliestStart <= 12
      sngChgStartHour = sngChgEarliestStart

      GO TO 990

960   CONTINUE
C  sngChgEarliestStart > 12
      sngChgStartHour = sngChgStartHour + 24
      IF (sngChgStartHour.LT.sngChgEarliestStart)
     +    sngChgStartHour = sngChgEarliestStart

      GO TO 990

950   CONTINUE
C  sngChgStartHour > 0
      IF (sngChgEarliestStart.GT.12) GO TO 990
C  sngChgEarliestStart <= 12
      IF (sngChgStartHour.LT.sngChgEarliestStart)
     +    sngChgStartHour = sngChgEarliestStart

990   CONTINUE
C  Do not charge beyond the period between start and end charging time
      IF (sngChgStartHour.LE.12) GO TO 970
C  sngChgStartHour > 12
      IF((HR.GE.sngChgLatestStop).AND.(HR.LT.sngChgStartHour))GO TO 900

      GO TO 980

970   CONTINUE
C  sngChgStartHour <= 12
      IF((HR.GE.sngChgLatestStop).OR.(HR.LT.sngChgStartHour)) GO TO 900

980   CONTINUE
C  Charge the tank
C  Calc ISAC tank remaining cooling capacity
      CAPRem = TANKCAP/FULLCAP

C  Calculate the condensing unit charging rate (ton)
      QCHG = sngCap0 + sngCap1*OAT + sngCap2*OAT**2 +
     +       sngCap3*CAPRem + sngCap4*CAPRem**2 + sngCap5*OAT*CAPRem

C  Convert ton to Btu/h
      QCHG = 12000*QCHG
```

```
      sngX = FULLCAP - TANKCAP
      IF (QCHG.GT.sngX) QCHG = sngX

C  Calculate EER of condensing unit during charging periods
      EER = sngEER0 + sngEER1*OAT + sngEER2*OAT**2 +
     +      sngEER3*CAPRem + sngEER4*CAPRem**2 + sngEER5*OAT*CAPRem

C  Calculate the condensing unit elec consumption for ISAC units
      IBCOOLKW = NumIB * (QCHG/EER/1000 + ParaStore)

C  Update tank capacity. Charging period already counts the tank loss
      TANKCAP = TANKCAP + QCHG
      GO TO 555

900   CONTINUE
C  No space cooling, no charging, counts tank standby loss
      sngTmp2 = TANKCAP - TANKUA*(OAT-32)
      IF (sngTmp2.LT.0) sngTmp2 = 0
      TANKCAP = sngTmp2
      QCHG = 0
      IBCOOLKW = NumIB * ParaIdle

555   CONTINUE
C  Check whether it is end of a day
      IF (HR.NE.24) GO TO 1000

C  End of a day cleanup
C  Set previous day's total melting hours to today's
      DAYCLHR1 = DAYCLHR

C  Reset today's total melting hours to 0
      DAYCLHR = 0

1000  CONTINUE

C  Calc total energy use of ISAC and DX
      TotCOOLKW = DXCOOLKW + IBCOOLKW
      SUMCLKWIB = SUMCLKWIB + TotCOOLKW
      SUMCLKWDX = SUMCLKWDX + DXCOOLKW
      COOLKW = TotCOOLKW

      IF (ISACHrp.EQ.1) WRITE(51,300) MON,DAY,HR,OAT,FON,CFM,QH,
     +               FANKW,TANKCAP,QCHG,EER,DAYCLHR,DAYCLHR1,
     +               TotCOOLKW,DXCOOLKW,IBCOOLKW,QC,QCDX,QCIB
300   FORMAT(3F5.0,F6.1,F4.0,2F10.1,F8.3,2F12.1,F6.2,2F5.0,
     +       3F7.3,3F12.1)

C  Print this at the end of the simulation
      ENDID = 0
      IF(MON.EQ.12.AND.DAY.EQ.31.AND.HR.EQ.24) ENDID = 1
      IF (ENDID.NE.1) GO TO 9000

      IF (SysIdx.EQ.1) PRINT 2
2     FORMAT (/,' REPORT- SS-Z ISAC Systems Cooling Energy Use',/,
     + '-------------------------------------------------------------')
```

```
      PRINT 4, SysIdx, NumIB, SYSCCAP, SYSCEIR,PEAKCLD
4     FORMAT (/,'SYSTEM ID = ',F5.0,/,'  Number of ISAC units = ',F5.1,
     +      '  Cooling Capacity Btu/h = ',F10.0,
     +      '  Cooling EIR = ',F5.3,'  Peak Cooling Load Btu/h = ',F12.0)

      sngSavings = 100*(SUMCLKW-SUMCLKWIB)/SUMCLKW
      PRINT 5,SUMCLKW,SUMCLKWIB,SUMCLKWIB-SUMCLKWDX,SUMCLKWDX,sngSavings
5     FORMAT ('      ALL DX Annual Cooling kWh = ', F12.1,/,
     +        '        ISAC Annual Cooling kWh = ', F12.1,
     +        '  Breakdown: Ice Storage kWh = ', F12.1,
     +        '  DX kWh = ', F12.1,/,
     +        '    Annual ISAC Cooling Savings = ', F12.1,'%',/)

9000  CONTINUE
      END

END-FUNCTION ..
```