2008 BUILDING ENERGY EFFICIENCY STANDARDS

CALIFORNIA ENERGY COMMISSION

COMMISSION MANUAL

RESIDENTIAL COMPLIANCE MANUAL

CEC-400-2008-016-CMF
December 2008
Revised May 2009

Arnold Schwarzenegger
Governor

CALIFORNIA ENERGY COMMISSION

Maziar Shirakh, PE
Buildings and Appliance Office
Project Manager

G. William Pennington
Office Manager
Buildings and Appliance Office

Valerie T. Hall
Deputy Director
Efficiency and Renewable Energy

Melissa Jones
Executive Director

DISCLAIMER

This report was prepared by staff of the California Energy Commission. It does not necessarily represent the views of the Energy Commission, its employees, or the State of California. The Energy Commission, the State of California, its employees, contractors, and subcontractors make no warrant, express or implied, and assume no legal liability for the information in this report; nor does any party represent that the uses of this information will not infringe upon privately owned rights. This report has not been approved or disapproved by the California Energy Commission nor has the California Energy Commission passed upon the accuracy or adequacy of the information in this report.

Acknowledgments

The Building Energy Efficiency Standards (Standards) were first adopted and put into effect in 1978 and have been updated periodically in the intervening years. The Standards are a unique California asset and have benefitted from the conscientious involvement and enduring commitment to the public good of many persons and organizations along the way. The 2008 Standards development and adoption process continued that long-standing practice of maintaining the Standards with technical rigor, challenging but achievable design and construction practices, and public engagement and full consideration of the views of stakeholders.

The revisions in the 2008 Standards were conceptualized, evaluated and justified through the excellent work of Energy Commission staff and consultants working under contract to the Energy Commission, Pacific Gas and Electric Company, Southern California Edison Company, San Diego Gas and Electric Company, and Southern California Gas Company. At the Energy Commission, Maziar Shirakh, PE, served as the project manager and senior engineer. Bill Pennington, Manager of the Buildings and Appliances Office, provided overall guidance to the staff and consultants. Valerie Hall, Deputy Director of the Energy Efficiency and Renewable Division provided policy guidance to the Staff. William Staack and Dick Ratliff provided legal counsel to the staff. Other key technical staff contributors included Jeff Miller, PE, Gary Flamm, Bruce Maeda, Payam Bozorgchami, Tav Commins, Rob Hudler, Alan Marshall, and Nelson Peña. Additional staff input and assistance came from Chris Gekas, Suzie Chan, Martha Brook PE, Smita Gupta, Claudia Orlando, Chris Olvera, Beverly Duffy, and the Energy Commission's Web Team. Key consultants included Architectural Energy Corporation, Bruce Wilcox, Taylor Engineering, Proctor Engineering, Benya Lighting Design, Chitwood Energy Management, Davis Energy Group, EnerComp, and E3. The Heschong Mahone Group served as the PG&E's prime consultant.

The Energy Commission dedicates the adoption of
*the **2008 Building Energy Efficiency Standards** to*
***Jon Leber, PE**, (November 13, 1947 - February 14, 2008)*
for his 30 years of dedication to excellence in the development and
implementation of the most energy efficient building standards
in the country and a model for others to follow.

He was the quintessential public servant.

Abstract

This manual is designed to help building owners, architects, engineers, designers, energy consultants, builders, enforcement agencies, contractors and installers, and manufacturers comply with and enforce the 2008 Title 24 California Building Energy Efficiency Standards (Standards) for low-rise residential buildings. Written as both a reference and an instructional guide, this manual can be helpful for anyone that is directly or indirectly involved in the design and construction of energy efficient nonresidential buildings. This manual is intended to supplement several other documents that are available from the California Energy Commission (Energy Commission). These are the: (1) 2008 California Building Energy Efficiency Standards, which were adopted April 23, 2008 and become effective August 1, 2009; (2) Reference Appendices for the Standards; and (3) Residential Alternative Calculation Method Manual. This manual provides a summary of the principle changes in the 2008 Standards relative to the 2005 Standards. The technical chapters cover building envelope, mechanical / heating ventilation and air conditioning (HVAC) systems, water heating (including swimming pool system requirements), interior and for outdoor lighting permanently attached to the building. Mandatory measures, prescriptive requirements and compliance options are described within each technical area, subsystem or component. Other subjects that are covered include the compliance and enforcement process, including design and preparation of compliance documentation through field verification and diagnostic testing; computer performance approach; additions, alterations and repairs; New Solar Home Partnership (NSHP) requirements; and HERS (Home Energy Rating System) raters.

Keywords: title 24, energy, energy efficiency, low-rise residential buildings, building envelope, domestic water heating, HVAC, indoor outdoor lighting, performance approach, prescriptive approach, mandatory requirements, residential compliance manual, HERS rating, diagnostic testing, solar, residential cool roofs, residential additions alterations repairs, climate zones

Table of Contents

1 Introduction 1-1
1.1 Related Documents 1-1
1.2 The Technical Chapters 1-2
1.3 Why California Needs Energy Efficiency Standards 1-3
1.4 What's New for 2008 1-5
1.5 Scope and Application 1-7
1.5.1 Building Types 1-7
1.5.2 Historical Buildings 1-9
1.5.3 Exempt Buildings 1-11
1.5.4 Building Systems Covered 1-12
1.5.5 Additions, Alterations and Repairs 1-12
1.6 Mandatory Measures and Compliance Approaches 1-16
1.6.1 Mandatory Measures 1-17
1.6.2 Prescriptive Packages 1-17
1.6.3 Performance Approach 1-18
1.7 Climate Zones 1-18
1.7.1 Building Location Data 1-19
1.8 Conditioned Floor Area 1-20
1.9 Where to Get Help 1-21
1.9.1 Energy Commission Publications and Support 1-21
1.9.2 Training Opportunities 1-23
1.9.3 Energy Consultants 1-24
1.9.4 Online Videos 1-24
1.9.5 HERS Raters and Providers 1-24
2 Compliance and Enforcement 2-1
2.1 Overview 2-1
2.2 Compliance and Enforcement Phases 2-2
2.2.1 Design Phase 2-3
2.2.2 Permit Application 2-4
2.2.3 Plan Check 2-4
2.2.4 Building Permit 2-5
2.2.5 Construction Phase 2-6
2.2.6 Enforcement Agency Field Inspection 2-7
2.2.7 Field Verification and/or Diagnostic Testing 2-8

2.2.8 Approval for Occupancy 2-9
2.2.9 Occupancy 2-10
2.3 Energy Standards Compliance Documentation 2-10
2.3.1 Building Permit Phase Documentation 2-11
2.3.2 Construction Phase Documentation (CF-6R) 2-12
2.3.3 Field Verification and/or Diagnostic Testing Documentation (CF-4R) 2-14
2.3.4 Compliance, Operating, and Maintenance, and Ventilation Information to be Provided by Builder 2-15
2.4 Roles and Responsibilities 2-18
2.4.1 Designer 2-18
2.4.2 Documentation Author 2-18
2.4.3 Builder or General Contractor 2-19
2.4.4 Specialty Subcontractors 2-20
2.4.5 Enforcement Agency 2-21
2.4.6 HERS Provider 2-24
2.4.7 HERS Rater 2-25
2.4.8 Third Party Quality Control Program 2-28
2.4.9 Owner 2-29
2.5 HERS Field Verification and Diagnostic Testing 2-30
2.5.1 Measures Requiring HERS Field Verification and Diagnostic Testing 2-30
2.5.2 Verification, Testing and Sampling 2-31
2.5.3 Initial Model Field Verification and Diagnostic Testing 2-32
2.5.4 Group Sample Field Verification and Diagnostic Testing 2-32
2.5.5 Re-sampling, Full Testing and Corrective Action 2-34
2.5.6 Installer Requirements and HERS Procedures for Alterations 2-35
2.5.7 For More Information 2-36
3 Building Envelope Requirements 3-1
3.1 Overview 3-1
3.1.1 Introduction 3-1
3.1.2 Building Orientation 3-2
3.1.3 What's New for 2008 3-2
3.2 Fenestration 3-4
3.2.1 Relevant Sections in the Standards 3-4
3.2.2 Mandatory Measures 3-5
3.2.3 Prescriptive Requirements 3-12
3.2.4 Compliance Options 3-17

3.2.5 Compliance and Enforcement 3-24
3.3 Insulation 3-26
3.3.1 Insulation General Mandatory Measures 3-26
3.3.2 Ceiling/Roof Insulation 3-28
3.3.3 Radiant Barriers 3-34
3.3.4 Wall Insulation 3-35
3.3.5 Floor Insulation 3-41
3.3.6 Slab Insulation 3-44
3.3.7 Compliance Options 3-46
3.4 Thermal Mass 3-55
3.4.1 Mandatory Measures 3-56
3.4.2 Prescriptive Requirements 3-56
3.4.3 Compliance Options 3-57
3.5 Infiltration and Air Leakage 3-58
3.5.1 Overview 3-58
3.5.2 Mandatory Measures 3-58
3.5.3 Compliance Options 3-63
3.6 Vapor Barriers and Moisture Protection 3-67
3.6.1 Mandatory Measures 3-67
3.8 Compliance and Enforcement 3-72
3.8.1 Design 3-73
3.8.2 Construction 3-73
3.8.3 Field Verification and/or Diagnostic Testing 3-74
3.9 Glossary/Reference 3-74
4 Building HVAC Requirements 4-1
4.1 Overview 4-1
4.1.1 Introduction and Organization 4-1
4.1.2 Prescriptive Packages 4-2
4.1.3 Performance Method 4-2
4.1.4 What's New for 2008 4-2
4.1.5 Common System Types 4-3
4.1.6 Appliance Standards and Equipment Certification 4-3
4.2 Heating Equipment 4-4
4.2.1 Mandatory Measures 4-4
4.2.2 Prescriptive Requirements 4-9

4.2.3 Compliance Options 4-9
4.3 Cooling Equipment 4-9
4.3.1 Mandatory Measures 4-9
4.3.2 Prescriptive Requirements 4-14
4.3.3 Compliance Options 4-19
4.4 Air Distribution Ducts and Plenums 4-21
4.4.1 Mandatory Measures 4-21
4.4.2 Prescriptive Requirements 4-28
4.4.3 Compliance Options 4-29
4.4.4 Duct Installation Standards 4-31
4.5 Controls 4-38
4.5.1 Thermostats 4-38
4.5.2 Zonal Control 4-39
4.6 Indoor Air Quality and Mechanical Ventilation 4-41
4.6.1 Typical Solutions for Whole Building Ventilation 4-44
4.6.2 Ventilation Flow Rate (Chapter 4 of ASHRAE 62.2) 4-47
4.6.3 Whole Building Mechanical Ventilation Energy Consumption 4-52
4.6.4 Local Exhaust (Chapter 5 of ASHRAE 62.2) 4-54
4.6.5 Other Requirements (Chapter 6 of ASHRAE 62.2) 4-57
4.6.6 Air Moving Equipment Other Requirements (Chapter 7 of ASHRAE 62.2) 4-67
4.7 Alternative Systems 4-71
4.7.1 Hydronic Heating Systems 4-71
4.7.2 Radiant Floor System 4-74
4.7.3 Evaporative Cooling 4-77
4.7.4 Ground-Source Heat Pumps 4-79
4.7.5 Solar Space Heating 4-80
4.7.6 Wood Space Heating 4-80
4.7.7 Gas Appliances 4-82
4.7.8 Evaporatively Cooled Condensers 4-83
4.7.9 Ice Storage Air Conditioners 4-83
4.7.10 Non-Ducted Systems 4-83
4.8 Compliance and Enforcement 4-84
4.8.1 Design 4-84
4.8.2 Construction 4-85
4.8.3 Field Verification and/or Diagnostic Testing 4-86

4.9 Refrigerant Charge 4-87
4.9.1 Refrigerant Charge Testing 4-87
5 Water Heating Requirements 5-1
5.1 Overview 5-1
5.1.1 Water Heating Energy 5-1
5.1.2 What's New for 2008 5-2
5.1.3 Water Heater Types 5-3
5.1.4 Distribution System Types 5-3
5.1.5 Solar Water Heating Calculations 5-5
5.2 Mandatory Requirements 5-5
5.2.1 Equipment Certification 5-5
5.2.2 Equipment Efficiency 5-5
5.2.3 Pipe Insulation 5-6
5.2.4 Insulation Protection 5-8
5.2.5 Certification of Showerheads and Faucets 5-8
5.2.6 Storage Tank Insulation 5-8
5.2.7 Water Heating Recirculation Loops Serving Multiple Dwelling Units 5-9
5.2.8 Solar or Recovered Energy in State Buildings 5-10
5.2.9 Pool and Spa Equipment 5-12
5.3 Prescriptive Requirements 5-16
5.3.1 Pipe Insulation on Lines to Kitchen 5-16
5.3.2 Systems Serving Individual Dwelling Units 5-16
5.3.3 Systems Serving Multiple Dwelling Units 5-19
5.3.4 Pipe Insulation Below Grade 5-20
5.4 Compliance Options 5-20
5.4.1 Performance Compliance 5-20
5.4.2 Auxiliary Systems 5-20
5.4.3 Combined Hydronic 5-21
5.4.4 Distribution System Options 5-21
5.4.5 Instantaneous Gas Water Heaters 5-22
5.5 Compliance and Enforcement 5-22
5.5.1 Design 5-22
5.5.2 Construction 5-23
5.5.3 Field Verification and/or Diagnostic Testing 5-23
5.6 Glossary/Reference 5-24

5.6.1 Water Heater Types 5-24
5.6.2 Distribution Systems 5-25
5.6.3 Pool and Spa Equipment 5-30
6 Lighting 6-1
6.1 Overview 6-1
6.1.1 Introduction and Scope 6-1
6.1.2 Summary of the Residential Lighting Standards 6-1
6.1.3 High-Rise Residential Dwelling Units and Hotel/Motel Guest Rooms 6-2
6.1.4 Fire Stations 6-3
6.1.5 Related Documents 6-3
6.2 Luminaires 6-5
6.2.1 High Efficacy Luminaires 6-5
6.2.2 Low Efficacy Luminaires 6-9
6.2.3 Qualifying a Lighting System as High Efficacy 6-10
6.2.4 Kitchen Luminaire Input Power 6-13
6.2.5 Electronic Ballasts 6-20
6.2.6 Permanently Installed and Portable Luminaires 6-21
6.2.7 Night Lights 6-22
6.2.8 Lighting Integral to Exhaust Fans 6-22
6.2.9 Certification to the Energy Commission 6-22
6.2.10 Light Emitting Diode (LED) Lighting Source Systems 6-24
6.3 Switching Devices and Controls 6-26
6.3.1 Certification of Residential Lighting Controls 6-26
6.3.2 Switching Requirements §150(k)7 6-26
6.3.3 Energy Management Control System 6-27
6.3.4 Vacancy Sensors 6-27
6.3.5 Residential Dimmers 6-30
6.4 Kitchens 6-32
6.4.1 Determine High Efficacy and Low Efficacy Installed Wattage 6-32
6.4.2 Kitchen Low Efficacy Tradeoff Option 6-34
6.4.3 Lighting Internal to Cabinets 6-35
6.4.4 Kitchen Lighting Controls 6-37
6.5 Bathrooms, Garages, Laundry Rooms, Closets, and Utility Rooms 6-41
6.5.1 Bathrooms 6-41
6.5.2 Garage 6-41

6.5.3 Laundry Room 6-42
6.5.4 Closets 6-42
6.5.5 Utility Room 6-42
6.5.6 Combined High Efficacy and Vacancy Sensor Option 6-42
6.6 Other Rooms 6-45
6.7 Outdoor Lighting 6-47
6.7.1 Temporary Override of Motion Sensor on Outdoor Luminaires 6-47
6.7.2 Address Signs 6-48
6.7.3 Control Requirements 6-48
6.7.4 Hot and Cold Environments 6-48
6.7.5 Exempt Outdoor Lighting 6-49
6.8 Parking Lots and Parking Garages 6-51
6.9 Common Areas of Multi-family Buildings 6-53
6.10 Luminaires Recessed in Ceilings 6-54
6.10.1 Luminaires in Insulated Ceilings 6-54
6.10.2 Ballasts for Recessed Luminaires 6-56
6.10.3 Exhaust Fans 6-56
6.11 Inspection Protocol for Recessed Luminaires in Insulated Ceilings 6-57
6.12 Recommendations for Luminaire Specifications 6-61
7 Performance Method 7-1
7.1 Overview 7-1
7.2 What's New for 2008 7-3
7.3 The Process 7-3
7.3.1 Defining the Standard Design 7-4
7.3.2 Standard Reports 7-4
7.3.3 Professional Judgment 7-7
7.4 Mixed Occupancy Buildings 7-7
7.5 Multifamily Buildings 7-8
7.5.1 Whole-building Compliance Approach 7-8
7.5.2 Unit-By-Unit Compliance Approach – Fixed Orientation Alternative 7-9
7.5.3 Unit-By-Unit Compliance Approach – Multiple Orientation Alternative 7-11
7.6 Subdivisions and Master Plans 7-11
7.6.1 Individual Building Approach 7-12
7.6.2 Multiple Orientation Alternative: No Orientation Restrictions 7-12
7.7 HVAC Issues 7-13

7.7.1 No Cooling Installed 7-13
7.7.2 Equipment without SEER or HSPF 7-13
7.7.3 Multiple HVAC Systems 7-13
7.7.4 Gas-Fired Cooling Systems 7-14
7.7.5 Existing + Addition + Alteration Approach 7-14
8 Additions, Alterations, and Repairs 8-1
8.1 Introduction 8-1
8.2 Compliance Approaches 8-4
8.3 Building Envelope 8-5
8.3.1 Mandatory Requirements 8-5
8.3.2 Prescriptive Requirements for Additions Alone 8-7
8.3.3 Prescriptive Requirements for Alterations 8-10
8.4 HVAC 8-17
8.4.1 Mandatory Requirements 8-17
8.4.2 Prescriptive Requirements 8-18
8.5 Water Heating 8-30
8.5.1 Replacement Water Heaters 8-30
8.5.2 Additions 8-30
8.5.3 Alterations to Systems 8-31
8.6 Lighting 8-32
8.7 Performance Method: Additions & Alterations 8-33
8.7.1 Whole Building Approach 8-34
8.7.2 Addition Alone Approach 8-34
8.7.3 Existing + Addition + Alteration Approach (also applies to Existing + Alteration when there is no Addition) 8-36
9 New Solar Homes Partnership 9-1
10 Index 10-1

List of Figures

Figure 1-1 – California Climate Zones 1-19
Figure 1-2 – Total Conditioned Floor Area 1-21
Figure 1-3 – Energy Commission Blueprint Newsletter 1-22
Figure 1-4 – Energy Commission Video Series 1-24
Figure 3-1 – NFRC Temporary Label 3-7
Figure 3-2 – Package D SHGC Criteria by Climate Zone 3-14

Figure 3-3 – Package C, D and E Prescriptive West-Facing Window Area Limits by Climate Zone 3-17
Figure 3-4 – Glass Area in Single Family and Multifamily Residence 3-18
Figure 3-5 – Difficulty of Shading East- and West-Facing Windows 3-20
Figure 3-6 – South-Facing Overhang Dimensions for Prescriptive Compliance 3-21
Figure 3-7 – Package D Prescriptive Ceiling/Roof Insulation Requirements 3-30
Figure 3-8 – Ceiling Insulation Construction Detail 3-31
Figure 3-9 – Baffles at the Eave in Attics 3-32
Figure 3-10 – IC-Rated Light Fixture 3-33
Figure 3-11 – Methods of Installation for Radiant Barriers 3-35
Figure 3-12 – Package D Wall Requirements by Climate Zone 3-37
Figure 3-13 – Brick Wall with Furring Details 3-38
Figure 3-14 – Brick Wall Construction Details 3-40
Figure 3-15 – Wall Construction Detail 3-40
Figure 3-16 – Raised Floor Insulation Requirements by Climate Zone 3-42
Figure 3-17 – Raised Floor Insulation 3-44
Figure 3-18 – Allowed Slab Edge Insulation Placement 3-46
Figure 3-19 – Examples of Poor Quality Insulation Installation 3-48
Figure 3-20 – Cellulose Insulated Wall 3-50
Figure 3-21 – Methods of Joining SIPS Panels 3-53
Figure 3-22 – Controlled Ventilation Crawl Space 3-53
Figure 3-23 – Thermal Mass Performance 3-56
Figure 3-24 – Caulking and Weatherstripping 3-60
Figure 3-25 – Fireplace Installation 3-62
Figure 3-26 – Air-Retarding Wrap 3-65
Figure 3-27 – Blower Door Testing 3-66
Figure 3-28 – Vapor Barriers with Kraft Paper 3-68
Figure 3-29 – CRRC Temporary Label 3-69
Figure 4-1 – Outdoor Compressor/Condenser Unit 4-12
Figure 4-2 – Refrigerant Line Insulation 4-13
Figure 4-3 – Condenser Coil with STMS attached 4-16
Figure 4-4 – Evaporator Coil 4-17
Figure 4-5 – Example of non-ducted ceiling returns for fan coil to meet fire code 4-25
Figure 4-6 – Example of metal bracket support to meet fire code separation 4-26
Figure 4-7 – R-4.2, R-6, and R-8 Ducts 4-28
Figure 4-8 – Example: Buried Ducts on Ceiling and Deeply Buried Ducts 4-30
Figure 4-9 – Connecting Round Metallic Ducts 4-32

Figure 4-10 – Connecting Flex Ducts Using Mastic and Mesh 4-33
Figure 4-11 –Connecting Flex Ducts Using Tape and Clamps 4-33
Figure 4-12 – Sealing Metallic Ducts with Mastic and Mesh 4-34
Figure 4-13 – Options for Suspending Rigid Round Metal Ducts 4-35
Figure 4-14 – Options for Suspending Rectangular Metal Ducts 4-35
Figure 4-15 – Minimum Spacing for Suspended Flex Ducts 4-36
Figure 4-16 – Minimum Spacing for Supporting Vertical Flex Ducts 4-36
Figure 4-17 – Minimizing Radius for Flex Duct Bends 4-37
Figure 4-18 – Computer-Controlled Aerosol Injection System 4-38
Figure 4-19– Zonal Control Example 4-40
Figure 4-20 – Exhaust Ventilation Example 4-45
Figure 4-21 – Supply Ventilation Example 4-46
Figure 4-22 – Combination Ventilation Example 4-47
Figure 4-23 – Additional Air Flow for Intermittent Fan Operation 4-49
Figure 4-24 – Filter Location Options 4-64
Figure 4-25 – Hydronic Heating System Components 4-72
Figure 4-26 – Combined Hydronic System with Water Heater as Heat Source 4-72
Figure 4-27 – Combined Hydronic System with Boiler and Indirect Fired Water Heater 4-74
Figure 4-28– Heated Slab-On-Grade Floor Insulation Options 4-76
Figure 4-29 – Measurements for Refrigerant Charge and Airflow Tests 4-88
Figure 5-1 – Energy Flows for Water Heating 5-2
Figure 5-2 – Pipe Insulation Requirements First Five Feet from Water Heater 5-7
Figure 5-3 – System Test Curves 5-13
Figure 5-4 – Measuring “w” at the pool site. 5-15
Figure 5-5 – Point of Use Distribution System 5-27
Figure 6-1 – GU-24 socket and base 6-6
Figure 6-2 – One type of LED trim with GU-24 base 6-8
Figure 6-3 – Blank Electrical Box 6-13
Figure 6-4 – GU-24 to medium screw base adapter shall not be used 6-19
Figure 6-5 –A compact fluorescent ballast is not considered an adapter 6-19
Figure 6-6 – A medium screw base to GU-24 socket adapter is not recognized as high efficacy by Title 24 6-19
Figure 6-7 – Kitchen Work Surface Lighting 6-37
Figure 6-8– General Kitchen Lighting 6-38
Figure 6-9 – Airtight, Type IC Luminaire 6-56
Figure 7-1 – Multifamily Building Compliance Option 7-10
Figure 7-2– Subdivisions and Master Plans Compliance Option 7-12

Figure 8-1– CRRC Product Label and Information 8-7
Figure 8-2– Addition Alone Prescriptive Compliance Approach 8-9
Figure 8-3– Addition Alone Performance Compliance Approach 8-35

List of Tables

Table 1-1 – Compliance Options vs. Design Recommendations 1-3
Table 1-2 – Building Types Covered by the Low-Rise Residential and Nonresidential Standards 1-9
Table 1-3 – Energy Commission Video Series Titles 1-25
Table 2-1 – Documentation Requirements, Prescriptive and Performance Compliance Methods 2-11
Table 3-1 – Allowable Methods for Determining U-factors 3-7
Table 3-2 – Methods for Determining Solar Heat Gain Coefficients 3-12
Table 3-3 – Maximum U-factors by Climate Zone in Packages C, D and E 3-13
Table 3-4 – Package C, D and E SHGC Criteria by Climate Zone 3-15
Table 3-5 – Qualifying Exterior Shades and Solar Heat Gain Coefficients 3-23
Table 3-6 – Raised Floor Constructions Used as Basis for Equivalent U-factor Compliance 3-43
Table 4-1 – Minimum Heating Efficiency for Boilers 4-5
Table 4-2 – Minimum Heating Efficiency for Non-Ducted, Non-Central Gas Fired Heating Equipment 4-6
Table 4-3 – Minimum Heating Efficiency for Heat Pumps 4-7
Table 4-4 – Minimum Cooling Efficiencies for Central Air Conditioners and Heat Pumps 4-10
Table 4-5 – Minimum Cooling Efficiency for Larger Central Air Conditioners and Heat Pumps 4-10
Table 4-6 – Minimum Cooling Efficiency for Non-Central Space Cooling Equipment 4-11
Table 4-7 – Continuous Ventilation Rate (cfm) 4-48
Table 4-8 – Ventilation Effectiveness for Intermittent Fans 4-50
Table 4-9 – Prescriptive Duct Sizing for Single Fan Exhaust Systems (from 62.2, Table 7.1) 4-69
Table 4-10 – Slab Insulation Requirements for Heated Slabs 4-75
Table 4-11 – Standards for Ground Water-Source and Ground-Source Heat Pumps Manufactured on or after October 29, 2003 4-79
Table 4-12– Structure of Target Superheat Temperature 4-89
Table 4-13 – Structure of Target Temperature Split 4-90
Table 5-1 –Description of Distribution Systems within a Dwelling Unit 5-4
Table 5-2 – Minimum Energy Factor Small Water Heaters 5-6
Table 5-3 – 6-Hour Turnover Pipe Sizing 5-14
Table 5-4 – Pool site measurement for sweep elbows 5-15
Table 5-5 – Pre-approved Alternative Water Heating Systems for Single Dwelling Units (Equivalent to prescriptive requirement) 5-17

Table 6-1 – High Efficacy Lamps – Other than LED lighting 6-11
Table 6-2 – High Efficacy LED Lighting Source Systems 6-12
Table 6-3 – Recessed Luminaire with Line voltage Lamp Holders 6-15
Table 6-4 –Multi-wattage Ballasts 6-16
Table 6-5 – Additional Low Efficacy Wattage Tradeoff 6-34
Table 6-6– Recommendations for Luminaire Specifications 6-61
Table 7-1 – Special Features to be Listed on CF-1R 7-6
Table 8-1 – Comparison of Compliance Methods for Additions 8-5
Table 8-2 – Prescriptive Envelope Requirements for Additions 8-8
Table 8-3 – Acceptable Replacement Heating System Fuel Source(s) 8-26

1 Introduction

This compliance manual is intended to help owners, designers, builders, inspectors, examiners, and energy consultants comply with and enforce California's energy efficiency standards for low-rise residential buildings. The lighting and domestic hot water requirements in this compliance manual also apply to high-rise residential buildings. The manual is written as a reference and an instructional guide and can be helpful for anyone that is directly or indirectly involved in the design and construction of energy efficient residential buildings.

The compliance manual has nine chapters:

- This chapter (Chapter 1) introduces the Standards and discusses the application and scope of the Standards for low-rise residences.
- Chapter 2 reviews the compliance and enforcement process, including design and preparation of compliance documentation through field verification and diagnostic testing.
- Chapter 3 addresses the requirements for the design of the building envelope.
- Chapter 4 covers the requirements for HVAC systems.
- Chapter 5 covers the water heating systems requirements, including the requirements for swimming pool systems.
- Chapter 6 addresses the requirements for interior and for outdoor lighting permanently attached to the building.
- Chapter 7 covers the computer performance approach.
- Chapter 8 covers additions, alterations, and repairs.
- Chapter 9 covers guidelines for complying with the requirements of the New Solar Homes Partnership.

1.1 Related Documents

This compliance manual is intended to supplement three other related documents that are available from the California Energy Commission (CEC). These are as follows:

- The California 2008 Building Energy Efficiency Standards (Title 24, Part 6). This compliance manual supplements and explains California's energy efficiency standards for buildings; it does not replace them. Readers should have a copy of the Standards to refer to while reading this manual as well as a copy of the 2008 Reference Appendices which contain information that is common to both the residential and nonresidential standards. The Reference Appendices have three main subsections: Reference Joint Appendices, Reference Residential Appendices, and Reference Nonresidential Appendices.

- 2008 Reference Appendices.
    - 2008 Reference Joint Appendices contain information common to both residential and nonresidential buildings.
    - 2008 Reference Residential Appendices contain information for residential buildings only. The Residential Appendices also contain field verification and/or diagnostic testing procedures for HVAC equipment, air distribution ducts, and insulation construction quality.
    - 2008 Reference Nonresidential Appendices contain information for nonresidential buildings only.
- The 2008 Residential Alternate Calculation Method (ACMs or Compliance Software) Manual. The 2008 Residential Compliance Software Manual is primarily a specification for computer software used for compliance purposes.

Material from related documents is not repeated in this Compliance Manual; rather, it is referenced. If you are using the electronic version of this Compliance Manual, there are hyperlinks throughout the manual that will take you directly to the document that is referenced.

1.2 The Technical Chapters

Each of the four technical chapters (3 through 6) begins with an overview, followed by a presentation of a specific topic in each subsection. For the building envelope, subsections include fenestration, opaque surfaces (walls, floors, and roofs), and air leakage and infiltration. For HVAC, the subsections include heating equipment, cooling equipment, and ducts. For water heating, subsections include equipment efficiencies and distribution systems. Lighting subsections include switching devices, controls, and lighting allowances. Mandatory measures and prescriptive requirements are described within each subsection or component. Chapter 7 describes the computer performance approach. Chapter 8 covers requirements for additions and alterations.

Each chapter or subsection also has a *compliance options* section. The *compliance options* section includes information on how to design a building that goes beyond the *prescriptive* energy efficiency requirements and *mandatory* energy efficiency measures. Compliance options are utilized for compliance credit through the performance approach. There are also *design recommendations*, such as on-site generation, for which no energy code compliance credit is offered. However, following the recommendations will significantly reduce building energy use or peak demand.

Table 1-1 – Compliance Options vs. Design Recommendations

Compliance Options	Credit offered through the performance approach
Design Recommendations, such as on-site generation	*No credit, but may still save energy or demand.*

1.3 Why California Needs Energy Efficiency Standards

Energy efficiency reduces energy costs, increases reliability and availability of electricity, improves building occupant comfort, and reduces impacts to the environment making standards important and necessary for California's energy future.

Energy Savings

Reducing energy use is a benefit to all. Homeowners save money, Californians have a more secure and healthy economy, the environment is less negatively impacted, and our electrical system can operate in a more stable state. The 2008 Standards (for residential and nonresidential buildings) are expected to reduce the growth in electricity use by 561 gigawatt-hours per year (GWh/yr) and reduce the growth in gas use by 19.0 million therms per year (therms/yr). The savings attributable to new low-rise residences are 102.2 GWh/yr of electricity savings and 7.4 million therms. These savings are cumulative, resulting in 6 times the annual saving over the 3 years to the next standard cycle.

Electricity Reliability and Demand

Buildings are one of the major contributors to electricity demand. We learned during the 2000/2001 California electricity crisis, and the east coast blackout in the summer 2003, that our electric distribution network is fragile and system overloads caused by excessive demand from buildings can create unstable conditions. Resulting blackouts can seriously disrupt business and cost the economy billions of dollars.

Since the California electricity crisis, the Energy Commission has placed more and more emphasis on demand reductions. The 2008 Standards are expected to reduce electric demand by 131.8 MW each year and 36.6 MW are attributable to low-rise residential buildings. Like energy savings, demand savings accumulate each year.

Comfort

Comfort is an important benefit of energy efficient homes. Energy efficient houses are well insulated, less drafty, and use high performance windows and/or shading to reduce solar gains and heat loss. Poorly designed building envelopes result in houses that are less comfortable. Even with oversized heating and cooling systems, comfort cannot be achieved in older, poorly insulated and leaky homes.

The Standards provide a compliance credit for properly sizing the air conditioner. This improves comfort through an even source of cooling, as opposed to an oversized air conditioner that runs for a short period of time, cools off the house and then sits idle for an extended period of time. Provided that the duct system

has been properly designed and installed and has minimal leaks, a smaller air conditioner that runs for a more extended period does a better job of reducing humidity in a house, may use less energy, and creates less stress on the electrical distribution system than an oversized system.

Economics

For the homeowner, energy efficiency helps to ensure that a home is affordable both now and into the future. Banks and other financial institutions recognize the impact of energy efficiency through energy efficient mortgages – they look at the total cost of owning the home, including paying the utility bills. If the utility bills are lower, lenders can qualify borrowers for a larger loan.

From a larger perspective, the less California depends on depletable resources such as natural gas, coal, and oil, the stronger and more stable the economy will remain in the face of energy cost increases. A cost-effective investment in energy efficiency helps everyone. In many ways, it is far more cost effective for the people of California to invest in saving energy than it is to invest in building new power plants.

Environment

In many parts of the world, energy use has led to oil spills, acid rain, smog, and other forms of environmental pollution that have ruined the natural beauty people seek to enjoy. California is not immune to these problems, but appliance standards, building standards, and utility programs that promote efficiency and conservation help to maintain environmental quality. Other benefits include reduced destruction of natural habitats, which in turn helps protect animals, plants, and natural systems.

Global Warming

Burning fossil fuel is a major contributor to global warming; carbon dioxide is being added to an atmosphere already containing 35 percent more than it did two centuries ago. Carbon dioxide and other greenhouse gases create an insulating layer around the earth that leads to global climate change. Energy Commission research shows that most of the sectors of the state economy face significant risk from climate change, including water resources (from reduced snow pack), agriculture, forests, and the natural habitats of a number of indigenous plants and animals.

Scientists recommend that actions be taken to reduce emissions of carbon dioxide and other greenhouse gases. While adding scrubbers to power plants and catalytic converters to cars reduce other emissions, they do not limit the carbon dioxide we emit into the atmosphere. Using energy efficiently is a far-reaching strategy that can make an important contribution to the reduction of greenhouse gases.

The National Academy of Sciences has urged the whole country to follow California's lead on such efforts, saying that conservation and efficiency should be the chief element in energy and global warming policy. Their first efficiency recommendation was simple: Adopt nationwide energy efficient building codes.

Energy conservation will not only increase comfort levels and save homeowners money, it will also play a vital role in creating and maintaining a healthy environment.

The standard is expected to have a significant impact on reducing greenhouse gas and other air emissions. Carbon dioxide, one of the more significant greenhouse gases, would be reduced by 473,282 tons each year. These estimates are based, when possible, on hourly emission rates for electricity use in southern and northern California. When savings estimates are made on an annual basis, average emission rates are used.

The Warren Alquist Act

Section 25402 of the Public Resources Code

The authority of the Energy Commission to develop and maintain energy efficiency standards for new buildings is provided in Section 25402 of the Public Resources Code (the Code). This section of the Code, commonly referred to as the Warren Alquist Act (the Act), is direction from the legislature on the development of energy efficiency standards in California.

The Act created the Energy Commission in 1974 and gave it authority to develop and maintain energy efficiency standards for new buildings. The Act directs the Energy Commission to "Prescribe, by regulation, lighting, insulation, climate control system, and other building design and construction standards which increase the efficiency in the use of energy for new residential and new nonresidential buildings."

The Act also requires that the Standards be cost effective "when taken in their entirety and amortized over the economic life of the structure," and it requires that the Energy Commission periodically update the Standards and develop manuals to support the Standards. Six months after publication of the manuals, the Act directs local building permit jurisdictions to withhold permits until the building satisfies the Standards.

The Public Resources Code was amended through Senate Bill 5X in 2002 to expand the authority of the Energy Commission to develop and maintain standards for outdoor lighting and signs.

1.4 What's New for 2008

The most significant changes in the 2008 Building Energy Efficiency Standards affecting residential buildings include the new requirements for high performance fenestration products. Other changes for residential buildings include the following:

All compliance approaches:

1. Revisions to the administrative §10-103 allow for electronic compliance document registration and submittal and for electronic retention of compliance documentation for future use; §10-105 to clarify roles and responsibilities of state agencies for enforcement

of the standards; and §10-113 to clarify requirements for low-sloped and steep-sloped roofs.

2. Revisions and clarifications to §118, Mandatory Requirements for Insulation and Roofing Products, including introduction of Solar Reflectance Index (SRI) for cool roof compliance.
3. Revisions and clarifications to §119, Mandatory Requirements for Lighting Control Devices.
4. Reorganizing the Joint Appendices in the Reference Appendices, creating the Residential and Nonresidential Appendices, migrating relevant sections from the Compliance Software Manuals into the Reference Appendices.

Prescriptive compliance:

1. Add new Cool Roof requirements for low-sloped and steep-sloped roofs.
2. Upgraded fenestration requirements (solar heat gain coefficient and U factor).
3. New mechanical ventilation requirements to maintain indoor air quality in line with ASHRAE Standards 62.2 requirements.
4. Updated swimming pool and spa requirements to include two-speed pumps and time clocks, and limit flow velocity.
5. New prescriptive efficiency measures were introduced for forced air system fan energy use and minimum airflow rate.
6. Updated requirements for air conditioner and heat pump refrigerant charge verification procedures, forced air system airflow measurement procedures, and thermal expansion valve (TXV) verification procedures (now test for proper TXV function). Also added optional simplified HERS verification procedures for refrigerant charge, and forced air system airflow measurements, and provided new alternative methods for compliance with the prescriptive refrigerant charge verification requirements.
7. Improved cross-flow prevention and pump protection for central hot water distribution systems in multifamily buildings with demand-control circulation loops.
8. Require under-slab hot water pipe insulation to mitigate heat loss.

Performance compliance:

1. Compliance Software Manual calculations were revised for: 1) slab heat-flow, 2) furnace fan modeling, 3) HVAC sizing credit, 4) duct leakage, 5) low leakage air handlers, and 6) water heating.
2. Improved roof and attic modeling - Unconditioned Zone Model (UZM) - to better model thermal interactions in attic such as radiant barriers, cool roofs, and ducts.

3. Compliance option credit for Distributed Energy Storage, Evaporatively Cooled Condensers, and Evaporative Coolers
4. Clarifications for additions and alterations proposed design and standards budget calculations.

1.5 Scope and Application

1.5.1 Building Types

Though the California Standards apply to both nonresidential and residential buildings, this compliance manual only address the requirements for low-rise residential buildings. A companion compliance manual addresses the requirements for nonresidential buildings, including hotels, motels, and high-rise residential buildings that are four stories or more in height.

The three-story designation relates to multifamily buildings, since all single family homes fall under the low-rise residential requirements regardless of the number of stories. An apartment building with three or fewer habitable floors falls under the low-rise residential standards while an apartment building that has more than three habitable floors falls under the nonresidential standards. High-rise residential dwelling units must still comply with the lighting and water heating requirements for low-rise residential buildings, e.g., the *Nonresidential Compliance Manual* makes reference to Chapters 5 and 6 of this document.

A habitable floor is defined in the California Building Code (CBC) and that definition is used with the energy efficiency standards. Mezzanines are not counted as separate habitable floors – nor are minor conditioned spaces such as an enclosed entry stair that leads to an apartment or dwelling unit on the next floor. A habitable story is one that contains space in which humans may live or work in reasonable comfort, and that has at least 50 percent of its volume above grade.

Live/work buildings are a special case since they combine residential and nonresidential uses within individual units. Such buildings are a common form of new construction in San Francisco and some other urban areas of the state. Even though live/work spaces may be used for an office or a studio, they are typically heated and/or cooled like a residence. For this reason the residential standards are more suitable and the Energy Commission has made this determination. Either the low-rise or high-rise residential standards apply, depending on the number of habitable floors.

However, lighting in designated workspaces in live/work lofts must comply with the nonresidential prescriptive lighting requirements. See Chapter 5 of the *Nonresidential Compliance Manual* and §146 for more information.

Explanation of Term

The term building type refers to the classification of buildings defined by the *CBC* and applicable to the requirements of the *Energy Efficiency Standards*. This manual is concerned with the energy standards that apply to all new low-rise residential buildings, which includes all single-family dwellings and multi-family

buildings with three or fewer habitable stories in the entire building. This manual does not consider standards applicable to multi- family buildings with four or more habitable stories in the entire building, hotels, motels and officially designated historical buildings. A multi-family building contains multiple dwelling units that share common walls (single family attached) and may also share common floors or ceilings (apartments).

All new residential buildings not in the above low-rise category are covered in the 2008 edition of Energy Commission's *Nonresidential Manual for Compliance with Energy Efficiency Standards* (see Parts 1.1 and 1.2).

1. A **single-family building** is a single dwelling unit of occupancy group R-3, as defined in the *CBC*, which stands separate and unattached from other dwelling units but may have an attached garage.
2. A **multi-family building** is a dwelling unit of occupancy group R, as defined in the *CBC*; that shares a common wall and/or floor/ceiling with at least one other dwelling unit. See Chapter 8 for more information on multi-family energy compliance. A single family attached building is a dwelling unit of occupancy group R that shares a common wall with another dwelling unit.
3. An **addition** is an extension of or increase in conditioned floor area and volume of a building, which can be new construction or adding space conditioning to an existing space. See Chapter 7 for more information on energy compliance of additions.
4. An **existing building** is: "...a building erected prior to the adoption of [the current] code, or one for which a legal building permit has been issued." [CBC, Part II, Section 403]

Table 1-2 – Building Types Covered by the Low-Rise Residential and Nonresidential Standards

Low-Rise Residential Standards (covered in this compliance manual)	**Nonresidential Standards** (covered by Nonresidential Compliance Manual)
All low-rise residential occupancies including single family homes, duplexes, garden apartments and other housing types with three or fewer habitable stories.	All nonresidential CBC occupancies (Group A, B, E, F, H, M, S, or U), as well as high-rise residential (Groups R-1 and R-2 with four or more habitable stories), and all hotel and motel occupancies.
Includes: • All single family dwellings of any number of stories (Group R-3) • All duplex (two-dwelling) buildings of any number of stories (Group R-3) • All multifamily buildings with three or fewer habitable stories (Groups R-1 and R-2) • Additions and alterations to all of the above buildings. • Lighting requirements for living quarters in high-rise multifamily buildings (over 3 stories) and water heating requirements for high rise multifamily buildings (over 3 stories)	Includes: • Offices • Retail and wholesale stores • Grocery stores • Restaurants • Assembly and conference areas • Industrial work buildings • Commercial or industrial storage • Schools and churches • Theaters • Hotels and motels • Apartment and multifamily buildings with four or more habitable stories (envelope and HVAC requirements) • Long-term care facilities (group R-2) with four or more habitable stories • Dormitories or other congregate residences, or any building with dormitory-style sleeping quarters, with six or more “guest rooms” • Private garages, carports, sheds, and agricultural buildings.

1.5.2 Historical Buildings

Exception 1 to §100(a)

Exception 1 to §100(a) states that qualified historic buildings, as regulated in the California Historical Building Code Title 24, Part 8 or California Building Code, Title 24, Part 2, Volume I, Chapter 34, Division II are not covered by the Building Energy Efficiency Standards. §146 (a) 3 clarifies that lighting systems in qualified historic buildings are exempt from the lighting power allowances only if they consist solely of historic lighting components or replicas of historic lighting components. If lighting systems in qualified historic buildings contain some historic lighting components or replicas of historic components, combined with other lighting components, only those historic or historic replica components are exempt. All other lighting systems in qualified historic buildings must comply with the Building Energy Efficiency Standards.

The California Historical Building Code (CHBC) Section 102.1.1 specifies that all non-historical additions must comply with the regular code for new construction, including the Building Energy Efficiency Standards. CHBC Section 901.5 specifies that when new or replacement mechanical, plumbing, and electrical (including lighting) equipment or appliances are added to historic buildings they should comply with the Building Energy Efficiency Standards, including the Appliance Efficiency Regulations.

The California State Historical Building Safety Board has final authority in interpreting the requirements of the CHBC and determining to what extent the requirements of the Building Energy Efficiency Standards apply to new and replacement equipment and other alterations to qualified historic buildings. It should be noted that in enacting the State Historical Building Code legislation, one of the intents of the Legislature was to encourage energy conservation in alterations to historic buildings (Health and Safety Code Section 18951).

Additional information about the CHBC can be found on the following web site:

http://www.dsa.dgs.ca.gov/StateHistoricalBuildingSafetyBoard

Or, contact the SHBSB at (916) 445-7627.

Example 1-1

Question

Are additions to historical buildings also exempt?

Answer

If the addition adjoins the qualified historic building, then the enforcement agency at his discretion may exempt those measures, which he determines could damage the historic value of the building. However, “additions which are structurally separated” from the historical building are not exempt from the Energy Efficiency Standards and must comply with building codes including Historical Building Code, Title 24, Part 8, Section 8-704.

Example 1-2

Question

A sunspace addition is designed with no mechanical heating or cooling and a glass sliding door separating it from all existing conditioned space. Under what conditions will the Standards not apply to this addition?

Source: CEC Photographer: Andersen Windows

Answer

The mechanical and envelope requirements of the Standards do not apply if a building inspector determines that the space is unconditioned. Whether conditioned or unconditioned, per §100(c)2, the sunspace must still comply with the applicable lighting requirements of §150(k). The sunspace is unconditioned if:

•The new space is not provided with heating or cooling (or supply ducts).

•The new space can be closed off from the existing house with weather stripped doors.

•The addition is not indirectly conditioned space.

A building official may require a sunspace to be conditioned if it appears to be habitable space, in which case the Standards apply.

1.5.3 Exempt Buildings

The following building types are exempt from the prescriptive and performance standards:

- Seasonally occupied agricultural housing limited by state or federal agency contract to occupancy not more than 180 days in any calendar year (§100(e)2.D.); however, these buildings must comply with the applicable mandatory requirements.
- Low-rise residential buildings that use no energy obtained from a depletable source for either lighting or water heating and obtain space heat from wood heating or other non-mechanical system. These buildings are also exempt from the mandatory requirements of the Standards.
- Based on discretion of building officials, temporary buildings, temporary outdoor lighting or temporary lighting in an

unconditioned building, or structures erected in response to a natural disaster (EXCEPTION 2 to §100(a)). These buildings may also be exempt from the mandatory requirements of the Standards.

1.5.4 Building Systems Covered

The low-rise residential standards affect the design of the building envelope; the heating, ventilation and air conditioning (HVAC) system; the water heating system; and the lighting system. The Standards do not apply to residential appliances (Appliance Efficiency Regulations may apply), elevators or dumbwaiters, or to portable lighting systems that are plugged into a wall outlet. Only hardwired lighting is regulated, which includes lighting that is a permanent part of the building.

1.5.5 Additions, Alterations and Repairs

§101(b)

§152 (a)

§152 (b)

Additions, alterations, and repairs are common construction projects for California homeowners. The Standards apply to both additions and alterations, but not to repairs. See Chapter 8 for details.

- **Additions** are changes to an existing building that increases conditioned floor area and volume.
- **Alterations**, that are not additions, are changes to a building's envelope, space conditioning system, water heating system or lighting system.
- **Repairs** are the reconstruction or renewal of any part of an existing building for the purpose of its maintenance. Replacement of any component systems (i.e. re-roofing), or equipment for which there are requirements in the Standards is considered an alteration and not a repair.

Example 1-3

Question

The Standards do not specify whether buildings damaged by natural disasters can be reconstructed to their original energy performance specifications. What requirements apply under these circumstances?

Answer

Buildings destroyed or damaged by natural disasters must comply with the energy code requirements in effect when the builder or owner applies for a permit to rebuild for those portions of the building that are being rebuilt.

Example 1-4

Question

Do the Standards apply to an addition to a manufactured ("mobile") home?

Source: CEC Photgrapher: Brian Vahey

Answer

No. Title 25 requirements, not Title 24, govern manufactured homes, including additions to the unit. Jurisdiction in a mobile home park comes under the authority of Housing and Community Development. Jurisdiction of a mobile home on private property may come under the authority of the local building department.

Example 1-5

Question

Three stories of residential dwelling units are planned over a first story that includes retail and restaurant occupancies. Should the residential apartments comply with the Residential Standards?

Answer

No. The building envelope and HVAC equipment must comply with the nonresidential (high-rise residential) standards since the structure contains four habitable stories and, as a whole structure, is a high-rise building. The dwelling units, however, must comply with the lighting and water heating requirements for low-rise residences.

Example 1-6

Question

A four-story single family townhouse (with no shared walls) has been constructed. Should the townhouse comply with the low-rise residential standards?

Answer

Yes. As a group R-3 occupancy, the low-rise residential standards apply. The building is not an apartment house (which, according to the CBC, must be at least three dwelling units).

Example 1-7

Question

A 2,100-ft² manager's residence is being constructed as part of a new conditioned warehouse building with 14,000 ft². Which standards apply?

Answer

The whole building can comply with the nonresidential standards, and the residential unit is not required to comply separately since it is a subordinate occupancy containing less than 20% of the total conditioned floor area. However, the residential dwelling unit must meet all low-rise residential mandatory measures as well as the lighting and water heating prescriptive requirements.

Example 1-8

Question

Assume the same scenario as in the previous example, except that the dwelling unit is new and the remainder of the building is existing. Do the residential standards apply?

Answer

Yes. Since 100% of the addition being permitted is a low-rise residential occupancy, compliance under the residential standards is required.

Example 1-9

Question

A residence is being moved to a different location. What are the applicable compliance requirements?

Answer

Because this is an existing conditioned space, the requirements applicable to alterations would apply to any alterations being made. The building does not need to show compliance with the current energy standards applicable to new buildings or additions.

Example 1-10

Question

A previously conditioned retail space is remodeled to become a residential dwelling. What are the applicable compliance requirements?

Answer

The residential dwelling is treated as if it were previously a residential occupancy. In this case, the rules that apply to residential alterations are applied.

Example 1-11

Question

A 10,000 ft², 16-unit motel is constructed with an attached 1,950 ft² manager's residence. What are the applicable compliance requirements?

Source: http://www2.sjsu.edu/faculty/wooda/calpark.jpeg

Answer

The manager's unit is less than 20% of the total floor area, so compliance of the whole building as the predominant motel occupancy would satisfy the requirements of the Standards. Either the entire building must comply with the nonresidential (high-rise residential and hotel/motel) standards; or the manager's residence must comply with the low-rise residential standards and the motel occupancy portion of the building must comply with the nonresidential standards.

Example 1-12

Question

A subdivision of detached homes includes several unit types, each of which may be constructed in any orientation. What are the applicable compliance requirements?

Answer

The low-rise residential standards are applied to each building type. All four cardinal orientations may be shown to comply or each individual unit in its planned orientation must comply.

Example 1-13

Question

A four-story apartment building has three stories of apartments and a garage on the first floor. What are the applicable compliance requirements?

Answer

For Standards compliance, the low-rise residential standards apply since the building has fewer than four habitable stories. However, for the purpose of other non-energy codes and standards this may be considered a four-story building.

Example 1-14

Question

If in the example above, there was a small air conditioned elevator lobby at the garage floor, what would be applicable compliance requirements?

Answer

§101 defines a habitable story as a story that contains space in which humans may work or live in reasonable comfort, and that has at least 50 percent of its volume above grade. The small elevator lobby does not meet this definition for habitable story and therefore the low-rise residential standards still apply.

Example 1-15

Question

If in the example above, there was a receptionist station in the conditioned elevator lobby at the garage floor, what would be applicable compliance requirements?

Answer

In this case the lobby with the receptionist meets the habitable story definition of the §101 and therefore the building must be considered a high-rise residential occupancy.

1.6 Mandatory Measures and Compliance Approaches

In addition to the mandatory measures (Section 1.6.1), the Standards provide two basic methods for complying with low-rise residential energy budgets: the prescriptive approach and the performance approach. The mandatory measures must be installed with either of these approaches, but note that mandatory measures may be superseded by more stringent measures under the prescriptive or performance approaches.

1. The **prescriptive approach**, composed of several prescriptive packages (Section 1.6.2), is the simpler. Each individual energy component of the proposed building must meet a prescribed minimum efficiency. The prescriptive approach offers relatively little design flexibility but is easy to use. There is some flexibility for building envelope components, such as walls, where portions of the wall that do not meet the prescriptive insulation requirement may still comply as long as they are area-weighted with the rest of the walls, and the average wall performance complies.
2. The **performance approach** (Section 1.6.3) is more complicated but offers considerable design flexibility. The performance approach requires an approved computer software program that models a proposed building, determines its allowed energy budget, calculates its energy use, and determines when it complies with the budget. Compliance options such as window orientation, shading, thermal mass, zonal control, and house configuration are all considered in the performance approach. This approach is popular with production home builders because of the flexibility and because it provides a way to find the most cost-effective solution for complying with the Standards.

For additions and alterations, see Chapter 8 for details of compliance approaches that are available.

1.6.1 Mandatory Measures

With either the prescriptive or performance compliance paths, there are mandatory measures that must always be installed. Many of the mandatory measures deal with infiltration control and lighting; others require minimum insulation levels and equipment efficiency. The minimum mandatory levels are sometimes superseded by more stringent prescriptive or performance approach requirements. For example, if mandatory measures specify R-19 ceiling insulation and the prescriptive approach, Package D, is used, R-30 or R-38 ceiling insulation (depending on climate zone) must be installed. Conversely, the mandatory measures may be of a higher efficiency than permitted under the performance approach; in these instances, the higher mandatory levels must be installed. For example, a building may comply using the performance computer modeling with only R-7 insulation in a raised floor, but R-13 must be installed because that is the mandatory minimum.

1.6.2 Prescriptive Packages

§151(f)

The prescriptive requirements are organized by packages. The prescriptive packages are the simplest and least flexible compliance path. The central prescriptive package, Package D, establishes the stringency of the Standards for the performance approach. Approved computer programs model a house with the features of Package D to determine the space conditioning and water heating budgets.

Each prescriptive package is a set of pre-defined performance levels for various building components. Each building component must meet or exceed the minimum efficiency level specified in the package. There are three packages to choose from: Package C (the all-electric house, applied to locations where natural gas is not available), Package D, and Package E. (Packages A and B were eliminated in the 2001 Standards).

Package C is presented in Table 151-B of the Standards (Appendix B of this document). Package D is presented in Table 151-C (and its footnotes) in the Standards (also in Appendix B of this document). Package E is presented in Table 151-D (and its footnotes) in the Standards (also in Appendix B of this document).

- **Package C.** This package allows electric resistance space heat, but increases stringency for most envelope features to make up for the additional Time Dependent Valuation (TDV) energy that would be used by the electric heating systems. Electric resistance water heating may also be used with Package C if the water heater is located within the building envelope and 25 percent of the water heating is provided by solar or a wood stove boiler where allowed. See §151(f)8.
- **Package D.** The Package D prescriptive requirements serve as the basis of the standard design in the performance approach and

determine the energy budget of a proposed design. These prescriptive requirements require that split system air conditioners or heat pumps (for definition see Reference Joint Appendix JA1) be diagnostically tested to verify that they have the correct refrigerant charge and that air distribution ducts be diagnostically tested to verify that leakage is less than 6 percent.

- **Package E** energy budget is equivalent to Package D; however, under this package it offers an energy equivalent prescriptive compliance method for metal frame fenestration products. It offsets the allowance of higher fenestration U- factors with other upgraded conservation features and compels the use of products with a structural rating not required by other compliance measures. The maximum fenestration U-factors of up to 0.57 are allowed in exchange for lower Solar Heat Gain Coefficient (SHGC), higher duct insulation R-values, and higher Annual Fuel Utilization Efficiency (AFUE) and Heating Seasonal Performance Factor (HSPF). These requirements vary based on climate zones.

1.6.3 Performance Approach

The performance approach, also known as the computer method, requires that the annual Time Dependent Valuation (TDV) energy be calculated for the proposed house and compared to the TDV energy budget. TDV energy is the "currency" for the performance approach. TDV energy not only considers the type of energy that is used (electricity, gas, or propane), but also when it is used. Energy saved during periods when California is likely to have a statewide system peak is worth more than energy saved at times when supply exceeds demand. Reference Joint Appendix JA3 has more information on TDV energy.

The use of Energy Commission-approved computer methods represents the most detailed and sophisticated method of compliance. While this approach requires the most effort, it also provides the greatest flexibility. The computer program automatically calculates the energy budget for space conditioning. The budget is determined from the standard design, a computer model of the building using the Package D prescriptive package. The computer software allows manipulation of the proposed building's energy features to achieve or do better than the energy budget; i.e. the building energy consumption would be equal to or less than the energy budget.

1.7 Climate Zones

To standardize calculations and to provide a basis for presenting the prescriptive requirements, the Energy Commission has established a set of standard climate data for each of the 16 climate zones. More information is provided in *Reference Joint Appendix JA2*, including a listing of climate zones for all California cities. *Reference Joint Appendix JA2* gives other climate information such as design temperatures for sizing HVAC equipment. The climate zone definitions and data are the same for both the low-rise residential and the nonresidential standards.

Cities may occasionally straddle two climate zones. In these instances, the exact building location and correct climate zone should be verified with the building

department or by the person preparing the compliance documentation before any calculations are performed. If a single building development is split by a climate zone boundary line, it must be designed to the requirements of the climate zone in which 50 percent or more of the dwelling units are contained.

Figure 1-1 – California Climate Zones

1.7.1 Building Location Data

Building location data refers to specific outdoor design conditions used in calculating heating and cooling loads. Different from the climate zone used for compliance (see *Climate Zone* below), design data includes the typically warmest and coolest outdoor temperatures that a building is likely to experience in an average year in its particular location.

Temperatures are from the ASHRAE publication, *SPCDX, Climatic Data for Region X - Arizona, California, Hawaii, Nevada*, May 1982 edition (see Appendix C). For heating, the outdoor design temperature is the Winter Median of Extremes. A higher temperature is permitted, but no lower than this value. For cooling, the outdoor design temperatures must be the 1.0 percent Summer Design Dry Bulb and the 1.0 percent Wet Bulb columns.

If a building location is not listed, the local enforcement agency may determine the location for which data is available that is closest in its design characteristics to the actual building site.

1.8 Conditioned Floor Area

Conditioned floor area (CFA) is the total floor area (in square feet) of enclosed conditioned space on all floors of a building, as measured at the floor level of the exterior surfaces of exterior walls enclosing the conditioned space. [§101] This term is also referred to in the Standards simply as the floor area.

This is an important value for the purpose of compliance since annual energy use is divided by this value to obtain the energy budget. In the prescriptive packages, the maximum fenestration area is expressed as a percentage of this value.

CFA is calculated from the plan dimensions of the building, including the floor area of all conditioned and indirectly conditioned space on all floors. It includes lofts and mezzanines but does not include covered walkways, open roofed-over areas, porches, pipe trenches, exterior terraces or steps, chimneys, roof overhangs or parking garages. Unheated basements or closets for central gas forced air furnaces are also not included, unless shown to be indirectly conditioned.

The floor area of an interior stairway is determined as the CFA beneath the stairs and the tread area of the stairs themselves.

See Figure 1-2 for an example of how CFA is calculated.

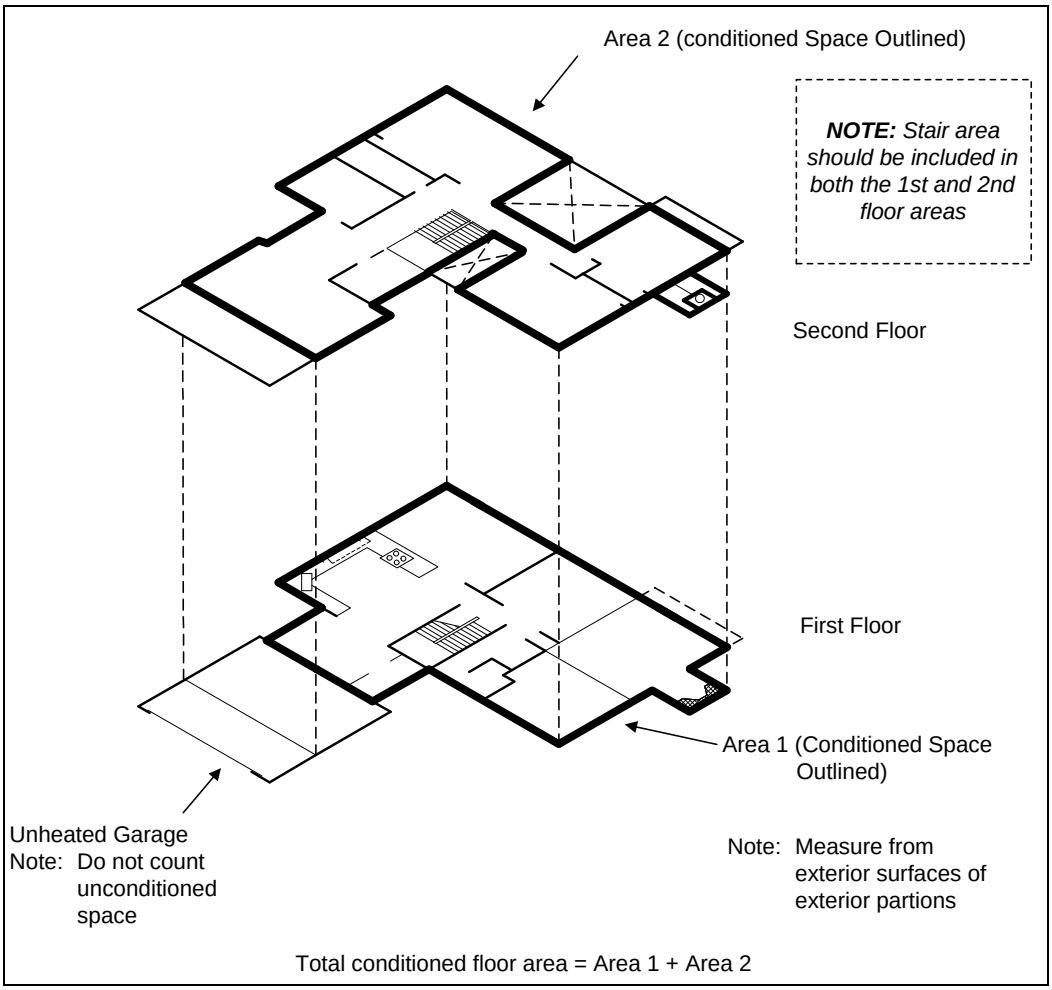

Figure 1-2 – Total Conditioned Floor Area

1.9 Where to Get Help

The Energy Commission has a number of resources to help designers, builders, homeowners and others understand and apply the Standards.

1.9.1 Energy Commission Publications and Support

Telephone Hotline

If the information contained in the Standards or this compliance manual are not sufficient to answer a specific question concerning compliance or enforcement, technical assistance is available from the Energy Commission Energy Hotline.

You can reach the Energy Hotline on weekdays from 8 a.m. – noon and 1 p.m. – 4:30 p.m.:

(800) 772-3300

(916) 654-5106

Publications

Publications, including the 2008 Standards, the *Joint Appendices*, and the *2008 Residential ACM Manual* and others are available from the Energy Commission website at http://www.energy.ca.gov/title24. Paper copies may also be ordered from:

Publications Unit

California Energy Commission

1516 Ninth Street, MS-13

Sacramento, CA 95814

(916) 654-5200

Blueprint

The Energy Commission publishes the Blueprint, a quarterly newsletter that answers questions and addresses issues related to enforcement and compliance. The Blueprint also provides updated information on technical assistance and computer compliance programs and lists of training opportunities offered throughout the state. The Blueprint is available online at http://www.energy.ca.gov/title24.

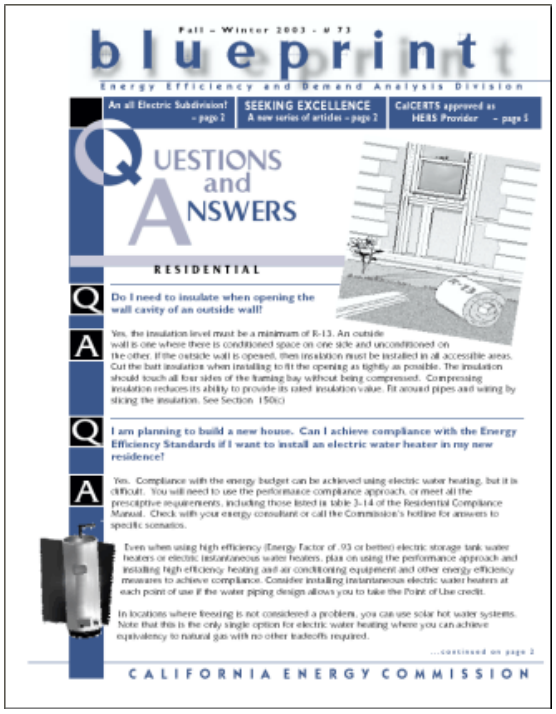
Fall – Winter 2003 - # 73

blueprint

Energy Efficiency and Demand Analysis Division

An all Electric Subdivision! – page 2 | SEEKING EXCELLENCE A new series of articles – page 2 | CalCERTS approved as HERS Provider – page 5

QUESTIONS and ANSWERS

RESIDENTIAL

Q Do I need to insulate when opening the wall cavity of an outside wall?

A Yes, the insulation level must be a minimum of R-13. An outside wall is one where there is conditioned space on one side and unconditioned on the other. If the outside wall is opened, then insulation must be installed in all accessible areas. Cut the batt insulation when installing to fit the opening as tightly as possible. The insulation should touch all four sides of the framing bay without being compressed. Compressing insulation reduces its ability to provide its rated insulation value. Fit around pipes and wiring by slicing the insulation. See Section 150(c)

Q I am planning to build a new house. Can I achieve compliance with the Energy Efficiency Standards if I want to install an electric water heater in my new residence?

A Yes. Compliance with the energy budget can be achieved using electric water heating, but it is difficult. You will need to use the performance compliance approach, or meet all the prescriptive requirements, including those listed in table 3-14 of the Residential Compliance Manual. Check with your energy consultant or call the Commission's hotline for answers to specific scenarios.

Even when using high efficiency (Energy Factor of .93 or better) electric storage tank water heaters or electric instantaneous water heaters, plan on using the performance approach and installing high efficiency heating and air conditioning equipment and other energy efficiency measures to achieve compliance. Consider installing instantaneous electric water heaters at each point of use if the water piping design allows you to take the Point of Use credit.

In locations where freezing is not considered a problem, you can use solar hot water systems. Note that this is the only single option for electric water heating where you can achieve equivalency to natural gas with no other tradeoffs required.

...continued on page 2

CALIFORNIA ENERGY COMMISSION

Figure 1-3 – Energy Commission Blueprint Newsletter

Appliance Standards

Appliances as defined by the Energy Commission include everything from dishwashers and refrigerators to air conditioners and boilers. The performance of some appliances, such as air conditioners, water heaters, and furnaces, is critical

to the building energy efficiency standards. The energy efficiency of other appliances such as refrigerators, dishwashers, and clothes dryers is important to homeowners, but does not affect the building standards, since these are considered home furnishings.

The Energy Commission has comprehensive standards that affect the performance of many appliances. These are published in the Appliance Efficiency Regulations, December 2007, P400-2007-016-Rev1. This document is available from the Energy Commission website at http://www.energy.ca.gov/efficiency/appliances/ or can be ordered from the Energy Commission Publications Unit (see contact information above).

Appliance Directories

The Energy Commission publishes information on the energy efficiency of appliances. Energy Commission-approved directories can be used to determine if appliances meet the mandatory measures and/or the prescriptive requirements. Data may also be used in performance calculations. The Energy Hotline can verify certification of appliances and provide information on appropriate directories.

The Energy Commission's website now includes references to listings of the most energy efficient appliances for several appliance types. The website address is:

http://www.energy.ca.gov/efficiency/appliances/index.html

The complete appliance databases can be downloaded from the Energy Commission's website at:

http://www.energy.ca.gov/efficiency/appliances/

The appliance databases, as well as manufacturer and brand codes, are spreadsheet files. After downloading, these files must be decompressed and can be viewed in Excel or other compatible software.

Directory of Certified Insulation Materials

Manufacturers whose insulating materials are certified for sale in California are listed in the Department of Consumer Affair's *Consumer Guide and Directory of Certified Insulation Material*. Each building department receives a copy of this directory. If an insulating product is not listed in the directory, or to purchase a directory, contact the Department of Consumer Affairs, Thermal Insulation Program, at (916) 574-2041.

1.9.2 Training Opportunities

If you are interested in attending a training seminar on the Standards, sign up to receive a free subscription to the *Blueprint*.

Some colleges provide classes on building energy conservation and the energy standards. Information about these classes should be obtained directly from the college.

California utilities, organizations of energy consultants, building industry, trade associations, and organizations that serve building officials often sponsor or

conduct classes on compliance and enforcement of the Title 24 Building Energy Efficiency Standards. These classes are often listed in the *Blueprint* or posted on the Energy Commission's website at http://www.energy.ca.gov/title24.

1.9.3 Energy Consultants

The California Association of Building Energy Consultants (CABEC) maintains a directory of consultants who provide compliance assistance. The listing is available at http://www.CABEC.org.

1.9.4 Online Videos

The Energy Commission has a series of streaming videos that explain energy efficiency concepts and the application of the standards. These videos cover topics including plan checking, HVAC, HERS, water heating, building envelope, and renewable energy. They can be viewed at http://www.energyvideos.com.

Figure 1-4 – Energy Commission Video Series

More than 100 videos produced by the Energy Commission include discussions, instructions, resources, and requirements for building residential structures.

1.9.5 HERS Raters and Providers

To achieve compliance with the Standards, some buildings require third-party diagnostic testing or field verification of energy efficient systems or devices. HERS (Home Energy Rating System) raters are required to be hired by the owner to perform this work. The Energy Commission approves providers who train, certify, and monitor HERS raters. Currently, three providers are certified. To find a rater, contact the Energy Commission HOTLINE at (800) 772-3300 (for calls within California) or (916) 654-5106 or query the Energy Commission website at http://www.energy.ca.gov/title24/.

Area	Topic	Content
Plan Checking	The Plan Checking Process The Plan Checking Process - Mandatory Measures Total Energy Inspection - Pt. 1 Total Energy Inspection - Pt. 2 The Inspection Process - Foundations The Inspection Process - Framing	The Inspection Process - Final Inspection CABEC Certified Energy Analysts Water Heating Overview for Inspectors Kitchen and Bath Lighting Energy Budget vs. Mandatory Measures
HERS Providers and Raters (T-24)	Blower Door California Home Energy Efficiency Rating System	HERS Rater Code Enforcement
Space Heating and Cooling	Overview Duct Sealing Duct Design Duct Sealing with Duct Tape Energy Code Requirements HVAC Lineset Insulation TXV - Proper sizing of A/C units and ducts TXV - Proper installation of A/C units and airflow	TXV - Proper charge for A/C units TXV -Title 24 and AB 970 compliance Title 24 Zonal Control HVAC Zoning for Comfort and Energy Savings Exhaust Ventilation Systems Overview of Exhaust Ventilation Exhaust Ventilation Energy Code Requirements
Water Heating	Code: Gas Water Heaters Gas Water Heating Overview for Inspectors Overview Installation	Consumer Energy Rebate Program AB-970 Gas Tankless Water Heaters - Overview Gas Tankless Water Heaters - Installation
Building Envelope	Energy Code Requirements - Fiberglass Cellulose Insulation - Overview Cellulose Insulation - Insulating Walls Cellulose Insulation - Insulating Ceilings Fiberglass Insulation - Overview and Insulating Ceilings Fiberglass Insulation - Ceiling Insulation Details Fiberglass Insulation - Installing Ductboard Fiberglass Insulation - Insulating Walls Fiberglass Insulation - Wall Insulation Details Spray Foam Insulation Structural Insulated Panels	Fenestration - Energy Code Requirements Overview of Low-e Windows Manufacturing Low-e Glass Energy Performance Area of Glass - Impact on Compliance with Title 24 Window Sizing Window Performance Housewrap - Overview Installing an Air Barrier Air Barrier Details Energy Code Requirements Radiant Barriers - Overview Installing Flexible Radiant Barriers Installing Radiant Barrier Sheathing Radiant Barrier Energy Code Requirements
Renewable Energy	Overview of Photovoltaic Technology Installing a Photovoltaic System Renewable Energy Rebates	Renewable Energy: Wind Renewable Energy: Residential Wind Generation
Beyond the Code	Major West Coast Builder Finds Profitable New Market The Building Science of It Energy Consultants: Building Better, Selling Faster Why it is Profitable as a Marketing Strategy	Biggest Production Builder Leads the Way HVAC Diagnostics Mold in Buildings Preventing Mold in Buildings
Additions and Alterations	Perspectives on Residential Additions Title 24: Residential Additions Title 24: Residential Alterations	

Table 1-3 – Energy Commission Video Series Titles

2 Compliance and Enforcement

2.1 Overview

Primary responsibility for compliance and enforcement with Energy Commission Energy Efficiency Standards rests with the local enforcement agency, typically associated with a city or county government. Low-rise residential buildings must obtain a permit from the local enforcement agency before a new building may be constructed, before constructing an addition, and before alterations are made to existing buildings. Before a permit is issued, the local enforcement agency examines the plans and specifications for the proposed building to verify compliance with all applicable codes and standards. Verification of compliance with the Building Energy Efficiency Standards, which is done by comparing the requirements specified on the Certificate of Compliance with the plans and specifications for the building, is the enforcement agency's plan check responsibility. The enforcement agency's plans examiner must also verify that the plans and specifications for the building are in compliance with the building code, the plumbing code, the electrical code, the mechanical code, and all other applicable codes and standards adopted by the local enforcement agency.

Once the enforcement agency has determined that the proposed building (as represented in the plans and specifications) complies with all applicable codes and standards, a building permit may be issued at the request of the builder or the owner of the proposed building. This is the first significant milestone in the compliance and enforcement process. After building construction is complete, the local enforcement agency completes the final inspection and issues the certificate of occupancy. If the enforcement agency's final inspection determines that the building conforms to the plans and specifications approved during plan check, and that it complies with all applicable codes and standards, the enforcement agency may approve the building. The enforcement agency's final approval is also a significant milestone.

While the permit and the certificate of occupancy are the most significant milestones, the compliance and enforcement process is significantly more involved and requires participation by a number of other persons and organizations including the architect or building designer, specialty engineers (mechanical, electrical, civil, etc.), energy consultants, contractors, the owner, third party inspectors (HERS raters), and many others.

This chapter describes the overall compliance and enforcement process, and it identifies the responsibilities for each person or organization.

Compliance Document Registration

§10-103 and Reference Residential Appendix RA2

New requirements for a documentation procedure called *registration* are introduced beginning with the 2008 Building Standards. *Registration* documentation procedures are required for construction and alteration of residential buildings for which HERS verification is required for compliance.

Registration requirements will be described in this chapter, and elsewhere in this manual, as applicable. Also, *Reference Residential Appendix RA2* provides detailed descriptions of documentation registration procedures and individual responsibilities for registration of Certificate(s) of Compliance (CF-1R), Installation Certificate(s) (CF-6R), and Certificate(s) of Field Verification and Diagnostic Testing (CF-4R).

Initially, *Registration* will be introduced as a requirement for newly constructed low-rise residential buildings demonstrating compliance under the §151(c)2 multiple orientation alternative for which compliance requires HERS field verification. Beginning on October 1, 2010, *registration* will be required for all low-rise residential buildings for which compliance requires HERS field verification.

When *registration* is required, persons responsible for completing and submitting compliance documents (Certificate of Compliance, Installation Certificate, and Certificate of Field Verification and Diagnostic Testing) are required to submit the compliance form(s) electronically to a HERS provider data registry for retention. Refer to Section 2.4.1 for additional information.

Document information submitted to the registry shall be certified by the applicable responsible person (§10-103). The registry shall assign a unique *registration* number to the document(s), provided the documents are completed correctly and a certification/signature is provided by the responsible person. The "registered" document will be retained by the HERS provider data registry, and copies of the unique registered document(s) will be made available via secure internet website access, to authorized users of the HERS provider data registry, for use in making electronic or paper copies of the registered document(s) for submittals to the enforcement agency as required, and for any other applicable purposes such as posting copies in the field for enforcement agency inspections.

Examples of authorized users of the HERS provider data registry may include energy consultants, builders, building owners, construction contractors and installers, HERS raters, enforcement agencies, the Energy Commission, and other parties to the compliance and enforcement process that the documents are designed to support. Authorized users of the registry will be granted read/write access rights to only the electronic data that pertains to their project(s). Documents submitted to public agencies for code compliance are considered public information.

2.2 Compliance and Enforcement Phases

The process of complying with and enforcing energy efficiency goals in residential buildings involves many parties. Those involved may include the architect or designer, builder/developer, purchasing agent, general contractor, subcontractor/installer, energy consultant, plan checker, inspector, realtor, and owner/first occupant. All of these parties must communicate for the compliance/enforcement process to run efficiently.

The standards specify detailed reporting requirements that are intended to provide design, construction, and enforcement parties with needed information to complete the building process and ensure the energy features are installed.

Each party is accountable for ensuring that the building's energy features are correctly installed in their area of responsibility.

This section outlines each phase of the process, discussing responsibilities and requirements during the phase.

The 2008 Compliance documentation is reworked to include those measures that were previously shown on the MF-1R on one of three CF-6R forms. This installation certificate is separated into Envelope, Lighting, and HVAC and each section includes the mandatory measures and the measures required by the selected compliance approach. More information on these new forms is included in Section 2.2.5 Construction Phase.

The 2008 Energy Efficiency Standards also introduce new reporting requirements for new building construction, and alterations for which HERS field verification credit is claimed on the Certificate of Compliance. The reporting process is referred to as *registration*, and it affects all compliance documentation throughout each phase of the construction process for those projects with HERS verification requirements for compliance. General information describing registration procedures that are specific to the design, construction and inspection phases follow in this section. Refer also to Reference Residential Appendix RA2 for more detailed descriptions of these document *registration* procedures that apply to each phase of the building energy code compliance and enforcement process.

2.2.1 Design Phase

§10-103(a)2

This phase sets the stage for the type and style of building to be constructed. In addition to issues concerning zoning, lot orientation and infrastructure, the building's overall design and energy features are documented in the construction documents and/or specifications. Parties associated with this phase must ensure that the building complies with the Building Energy Efficiency Standards and that the significant features required for compliance are documented on the plans and/or specifications.

During the design process, an energy consultant or other professional will typically assist the building designer, providing calculations that determine the impact of building features being proposed for the design, in order to ensure that the final building design plans and specifications submitted to the enforcement agency will comply with the Building Energy Efficiency Standards. Throughout the design phase, recommendations or alternatives may be suggested by energy consultants or the documentation author to assist the designer in achieving compliance.

Plans and specifications are required to contain details to show the building features that are necessary to achieve compliance, including insulation levels, window performance, equipment performance, envelope sealing and weather stripping requirements, and any other feature that was used for compliance or is a mandatory measure. Essentially, the building design plans and specifications are required to be complete and thoroughly consistent with regard to specification of the energy efficiency features selected for compliance with the Building Energy Efficiency Standards and specified on the Certificate of Compliance (CF-1R) submitted to the enforcement agency, along with the plans and specifications for the proposed construction or alteration. Any change in the plans or specifications, during any phase of design or construction that change

the energy features for the design, necessitates recalculation of the code compliance, and/or issuance of a revised certificate of compliance that is consistent with the revised plans and specifications for the proposed building. If recalculation indicates that the building no longer complies, alternate building features shall be selected that bring the design back into compliance with the Energy Efficiency Standards.

2.2.2 Permit Application

§10-103(a)2

When the design is complete, the construction documents are prepared, and when other approvals (planning department, water, etc.) are secured, the owner or contractor makes an application for a building permit. This is generally the last step in a long process of planning and design. At this point, the infrastructure (streets, sewers, water lines, electricity, gas, etc.) is in place or is being constructed and it is time to begin the process of constructing the building(s).

To assist the enforcement agency in verifying that the proposed building complies with the Energy Efficiency Standards, a set of compliance documents are submitted with the building permit application. These documents consist of a Certificate of Compliance, which is required by the Energy Efficiency Standards (see §10-103). The length and complexity of the documentation can vary considerably depending on the number of buildings that are being permitted, whether or not an orientation-independent permit is being requested, whether the performance approach or the prescriptive approach is being used, and many other factors. An energy consultant who understands the code and is able to help the builder or owner comply with the standards in the most cost-effective manner often prepares the compliance documents.

The Administrative Regulations §10-103(a)2 require that documentation be submitted with permit applications that will enable the plans examiner to verify the building's compliance. The forms used to demonstrate compliance must be readily legible and of substantially similar format and informational order as those specified in this compliance manual. If registration is required, the CF-1R that is submitted to the building department must be a registered copy from a HERS provider data registry.

The registration process requires the builder or designer to submit information to a HERS provider data registry in order to produce a completed, signed and dated electronic Certificate of Compliance (CF-1R) that is retained by the registry for use by authorized users of the registry. After the information to complete the CF-1R document is transmitted to the data registry, the CF-1R is assigned a registration number, and copies of the unique registered CF-1R are made available to authorized users of the HERS provider data registry for use in making electronic or paper copies of the registered document(s) for submittal to the enforcement agency as required.

2.2.3 Plan Check

Local enforcement agencies check plans for conformance to Building Standards. This includes health and safety requirements, such as fire and structural, along with energy requirements. Vague, missing, or incorrect information on the

construction documents are identified by the plans examiner, and when necessary, the permit applicant is required to make corrections or clarifications, then resubmit revised plans and specifications for verification by the plans examiner. When the permit applicant submits accurate, clearly defined plans and specifications, it helps to speed up the plan check process, since this provides the plans examiner with all the information that is needed to complete the plan check review. If the plans examiner must to go back to the applicant to request more information, it can be a time-consuming process that would be simplified (thus completed more easily and in less time) when complete and accurate construction documents are submitted for plan check approval.

With regard to energy code concerns, from the enforcement agency's perspective, the plan checker's responsibility is to verify that the information contained on the construction documents is consistent with the requirements specified on the energy efficiency compliance documents. Since building materials purchasing personnel and building construction craftsmen in the field may rely solely on a copy of the approved plans and specifications for direction in performing their responsibilities, it is of utmost importance that the building design represented on the approved plans and specifications complies with the energy efficiency standards as specified on the Certificate(s) of Compliance (CF-1R).

The enforcement agency plans examiner must also verify that the compliance documents do not contain errors. When the compliance documents are produced by Energy Commission-approved computer software applications, there is less chance that there will be computational errors, but the plans examiner must still verify that the building design represented on the plans is consistent with the building energy features represented on the Certificate of Compliance (CF-1R) documents. To obtain a list of Energy Commission-approved energy code compliance software applications, visit the Energy Commission website at:

http://www.energy.ca.gov/title24/2008standards/

Or call the Efficiency Standards Hotline at 1-800-772-3300.

With production homes, where a builder may be constructing several identical houses at roughly the same time, the compliance documentation may be prepared in such a way that a house or model can be constructed in any orientation. When an application is filed for orientation independence, it usually follows the performance approach – if the house is shown to comply when oriented along the four main compass points, it can be assumed to comply in any orientation.

2.2.4 Building Permit

After the plans examiner has approved the plans and specifications for the project, a building permit may be issued by the enforcement agency at the request of the builder. Issuance of the building permit is the first significant milestone in the compliance and enforcement process. The building permit is the green light for the contractor to begin the work. In some cases, the building permits are issued in phases. Sometimes there is a permit for site work and grading that precedes the permit for actual building construction.

2.2.5 Construction Phase

Upon receiving a building permit from the local enforcement agency, the contractor begins construction. The permit requires the contractor to construct the building in substantial compliance with the plans and specifications, but often there are variations. Some of these variations are formalized through change orders. When change orders are issued, it is the responsibility of the permit applicant and the local jurisdiction to verify that compliance with the code is not compromised by the change order. In some cases, it will be quite clear if a change order would compromise compliance, for instance when an inexpensive single glazed window is substituted for a more expensive high performance window. However, it may be difficult to determine if a change order would compromise compliance; for instance, when the location of a window is changed, or when the orientation of the house is changed. Field changes that result in non-compliance require enforcement agency approval of revised plans and energy compliance documentation to confirm that the building is still in compliance.

During the construction process, the general contractor or specialty subcontractors are required to complete various construction certificates. The purpose of these certificates is to verify that the contractor is aware of the requirements of the building energy standards, and that they have followed the Energy Commission-approved procedures for installation. The Installation Certificate (CF-6R) is a collection of several separate component certificates that are applicable to each regulated energy feature that may be included in the construction. The certificates are required to be completed by each of the applicable specialty contractors when they install regulated energy features such as windows, water heater and plumbing, HVAC ducts and equipment, and insulation. Also, any contractor or specialist who may be responsible for insuring the building envelope tightness must complete the applicable section of a CF-6R for the building.

The licensed person responsible for the building construction, or for installation of an energy feature must ensure their construction or installation work is done in accordance with the approved plans and specifications for the building, and must complete and sign an Installation Certificate (CF-6R) to certify that the installed features, materials, components or manufactured devices for which they are responsible conform to the plans and specifications and the Certificate of Compliance (CF-1R) documents approved by the enforcement agency for the building. A copy of the completed, signed and dated CF-6R must be posted at the building site for review by the enforcement agency in conjunction with requests for final inspection for the building.

When registration is required, the submitted portions of the CF-6R that require field verification by a HERS rater must be registered documents from a HERS provider data registry. When registration is required, the builder or installing contractor, upon completion of the work that requires field verification and/or diagnostic testing, must submit information to a HERS provider data registry in order to produce a completed, signed and dated electronic Installation Certificate (CF-6R) that is retained by the registry for use by authorized users of the registry. After the information to complete the CF-6R document is transmitted to the data registry, the CF-6R is assigned a registration number, and copies of the unique registered CF-6R are made available to authorized users of the HERS provider data registry for use in making electronic or paper copies of the registered document(s) for submittal to the enforcement agency as required. The builder or

installing contractor responsible for the installation must provide a copy of the completed signed registered Installation Certificate to the HERS rater, and post a copy at the building site for review by the enforcement agency in conjunction with requests for final inspection.

For additional information and detail on the registration of CF-6R documents, refer to Reference Residential Appendix RA2.

2.2.6 Enforcement Agency Field Inspection

§10-103(d)

Local building departments, or their representatives, inspect all new buildings to ensure conformance to building standards. Field construction changes and non-complying energy features require parties associated with previous phases to repeat and revise their original energy compliance documents.

Enforcement agencies generally make multiple visits to a building site to verify construction. The first visit is typically made just before it is time to pour the slab or the building foundation. At this visit, the building inspector verifies that the proper reinforcing steel is in place and that necessary wiring and plumbing that will be embedded in the slab meets the requirements of the Standards. The inspector should verify features that are to be installed in concrete slab floors, such as slab edge insulation or hot water recirculation loops that involve piping that must be installed in the slab. See Section 3.3.6, Slab Insulation, in the Envelope Chapter of this manual.

The second visit generally occurs after the walls have been framed, and the wiring, plumbing, and other services have been roughed in. This inspection is recommended to be made before the insulation is installed, since it is the best time to assure the completion of sealing and caulking around windows, and the caulking and sealing of any holes bored through the framing members for installation of hot and cold water piping and electrical wiring. During the rough Frame Inspection, it is also best for the inspector to verify the installation of the high efficacy lighting (or the applicable lighting control alternatives) so that the contractor has ample time to make any necessary corrections before the Final Inspection, and to avoid having to remove drywall, insulation, etc. to remove an incandescent can.

The third visit is the Insulation Inspection, which takes place after the wall, ceiling, and floor insulation has been installed. This inspection occurs before the drywall is installed to verify the insulation R-value matches the CF-1R Form, and that the insulation has been properly installed without compressions, voids, or gaps. The inspector should verify that insulation is installed correctly around and behind piping, and that all exterior walls are insulated (especially behind obstructing objects like a bathtub).

The next visit is usually a Drywall Inspection, where the inspector verifies the drywall is installed properly to limit infiltration and exfiltration, especially at locations of lighting cans, HVAC registers and vents, electrical sockets, etc.

The Final Inspection is conducted after the walls have been closed and the final electrical and plumbing fixtures are in place. The typical enforcement agency inspection sequence can vary from jurisdiction to jurisdiction, and it can be difficult for the enforcement agency to verify every energy efficiency measure

required to be installed the building. For example, exterior wall insulation will likely not be installed at the time of the Framing Inspection, and if the enforcement agency does not include the Insulation Inspection in their field verification process, the exterior wall insulation would be concealed from an inspector's view at the time of the Final Inspection.

For this and other reasons, the Installation Certificate (CF-6R) and when required, the Certificate of Field Verification and Diagnostic Testing (CF-4R) are crucial. When inspection of an installed energy feature would be impossible because of subsequent construction, the enforcement agency may require the CF-6R for the concealed feature to be posted at the site or made available to the inspector upon completion of the installation of the feature.

When registration is required, the CF-6R must be a registered copy from a HERS provider data registry. For all measures requiring field verification, a registered Certificate of Field Verification and Diagnostic Testing (CF-4R) shall also be made available to the building inspector.

2.2.7 Field Verification and/or Diagnostic Testing

Some building features require field verification and/or diagnostic testing by a third party inspector as a condition for compliance with the Standards. The Energy Commission has established the California Home Energy Rating System (HERS) program to provide for the training and certification of HERS raters who are to be considered special inspectors by building departments. When compliance with the energy code is based on energy features that require third party (HERS) verification, a certified HERS rater is required to perform field verification and/or diagnostic testing according to the procedures in Reference Residential Appendix RA2 using the protocols specified in Reference Residential Appendix RA3.

Prescriptive packages C, D, and E as well as most performance method applications require some sort of field verification and/or diagnostic testing. Most of the typical measures that require HERS field verification and/or diagnostic testing involve air conditioning equipment and forced air ducts that deliver conditioned air to the dwelling. Examples of measures requiring HERS verification are refrigerant charge measurement and duct sealing.

The 2008 Standards do not allow verification of a thermostatic expansion valve (TXV) as an alternative to performing refrigerant charge verification. However, 2008 Standards allow verification of the installation of a refrigerant Charge Indicator Display (CID) as an alternative method for compliance with the prescriptive Refrigerant Charge Verification requirement. Additionally, 2008 Standards require installation of Saturation Temperature Measurement Sensors (STMS) if a CID is not installed in the air conditioning system. STMS must be factory installed or field installed according to the manufacturer's specifications. STMS make it possible to perform the refrigerant charge verification procedure without use of pressure gauges. Refer to the refrigerant charge verification procedure described in Reference Residential Appendix RA3.2 for more information about use of saturation temperature sensors. Additionally, 2008 Standards specify that the air conditioning system installer must provide Temperature Measurement Access Holes (TMAH) in the supply and return plenums, and either a Permanently installed Static Pressure Probe (PSPP) or a Hole for the temporary placement of a Static Pressure Probe (HSPP) in the

supply plenum. These installer-provided features make it possible for HERS raters to perform non-intrusive temperature split and static pressure measurements as required by HERS verification protocols described in Reference Residential Appendix RA3.

Additional measures requiring field verification include verified prescriptive cooling coil airflow and fan watt draw, reduced duct surface area, increased duct R-value, high EER cooling equipment, and quality installation of insulation. For a full list of measures requiring field verification and/or diagnostic testing, refer to Table RA2-1 of the 2008 Reference Residential Appendices.

The requirements for field verification and/or diagnostic testing apply only when equipment or systems are installed. For example, if a house has no air distribution ducts, then a HERS rater does not have to test the ducts, since there are no ducts to test. Similarly, if a house showing prescriptive compliance does not have a split system air conditioner or heat pump, then a HERS rater does not have to test the refrigerant charge, because the requirements do not apply.

Some homes along the coast are built without air conditioning (for cooling) and may use hydronic systems or other heating systems without air distribution ducts. In this case, a HERS rater is not required, even when a prescriptive package C, D, or E is used for compliance; unless compliance credit is desired for measures such as quality insulation installation.

The HERS rater must perform field verification of the required features and transmit all required data describing the feature and the results of the verification or diagnostic test to a HERS provider data registry. The HERS rater must also confirm that the installed energy feature being verified is consistent with the requirements for that feature as specified on copies of the CF-1R approved by the enforcement agency for the dwelling, that the information on the CF-6R is consistent with the CF-1R. The test results reported on the CF-6R by the person responsible for the installation must be consistent with the test results determined by the HERS rater's diagnostic verification and meet the criteria for compliance with the Standards.

Results from the Rater's verification or diagnostic test are reported to the HERS provider Data registry regardless of whether the result indicates compliance. If the results indicate compliance, the HERS provider data registry will make available a registered copy of the Certificate of Field Verification and Diagnostic Testing (CF-4R). A copy of the CF-4R must be posted at the building site for review by the enforcement agency, and made available for all applicable inspections. A copy of the CF-4R must be provided to the builder, and a copy must also be left in the dwelling for the owner at occupancy.

2.2.8 Approval for Occupancy

In multifamily dwellings of three and more units, the final step in the compliance and enforcement process is when the enforcement agency issues an occupancy permit. This is the green light for occupants to move in. Single family dwellings and duplexes may be approved for occupancy without an occupancy permit being issued. Often a signed-off final inspection serves as an approval for occupancy. Prior to the approval for occupancy, the HERS rater must post a signed and registered CF-4R in the field for the building official to review in conjunction with requests for final inspection. The HERS rater must also provide

a copy of the registered CF-4R to the builder, and a copy must be left in the building for the building owner at occupancy. Only registered CF-4R documents are allowed for these document submittals. Handwritten versions of the CF-4R are not allowed for document submittals for meeting compliance with the 2008 Standards.

2.2.9 Occupancy

At the occupancy phase, the enforcement agency shall require the builder to leave in the building all completed, signed and dated compliance documentation which includes at a minimum the CF-1R and CF-6R. When HERS field verification is required, a registered copy of the CF-4R is also required to be left on site with the compliance documentation. When registration is required, the CF-1R and CF-6R compliance documentation shall be registered copies. The builder is required to provide the homeowner with a manual that contains instructions for operating and maintaining the features of their building efficiently. See Section 2.3.4 for more details.

2.3 Energy Standards Compliance Documentation

Compliance documentation includes the forms, reports and other information that are submitted to the enforcement agency with an application for a building permit. It also includes documentation completed by the contractor or subcontractors to verify that certain systems and equipment have been correctly installed. It may include reports and test results by third-party inspectors (HERS raters). Ultimately, the compliance documentation is included with a homeowner's manual so that the end user knows what energy features are installed in the house.

Compliance documentation is completed at the building permit phase, the construction phase, the testing and verification phase, and at the final phase. The required forms and documents are shown in Table 2-1 and described in the rest of this section in more detail. When registration is required, the compliance documentation and field verification certificate shall be registered copies.

Table 2-1 – Documentation Requirements, Prescriptive and Performance Compliance Methods

Phase	Method	Documentation Required when applicable
Building Permit	Prescriptive and Performance	CF-1R, Certificate of Compliance
		MF-1R, Mandatory Measures
	Prescriptive	WS-1R, Thermal Mass Worksheet Checklist
	Prescriptive	WS-2R, Area Weighted Average Calculation Worksheet
	Prescriptive	WS-3R, Solar Heat Gain Coefficient (SHGC)
	Prescriptive and Performance	CF-SR, Solar Water Heating Calculation Form
Construction	Prescriptive and Performance	CF-6R, Installation Certificate
Field Verification and/or Diagnostic Testing	Prescriptive and Performance	CF-4R, Certificate of Field Verification and Diagnostic Testing, HERS Rater.

2.3.1 Building Permit Phase Documentation

§10-103(a)

The compliance documentation required at the building permit phase consists of the Certificate of Compliance (CF-1R), and Mandatory Measures (MF-1R) on the building plans depending on the compliance approach, the energy compliance documentation package may also include the Thermal Mass Worksheet (WS-1R), the Area Weighted Average Calculation Worksheet (WS-2R), and the Solar Heat Gain Coefficient (SHGC) Worksheet (WS-3R) and the Solar Water Heating Calculation Form (CF-SR). Blank copies of these documents are included in Appendix A for use with the prescriptive compliance requirements. When the performance approach is used, these documents are not needed since the Energy Commission-approved software performs the calculations and provides the necessary documentation as part of the software output.

The purpose of the compliance documentation is to enable the plans examiner to verify that the building design shown in the plans and specifications complies with the Standards, and to enable the field inspector to identify building features that are required for compliance.

Certificate of Compliance (CF-1R)

The standards require the certificate of compliance to be filed on the plans submitted to the enforcement agency. The CF-1R form identifies the minimum energy performance specifications selected by the building designer or building owner for compliance, and may include the results of the heating and cooling load calculations.

To meet the requirement for filing a copy of the CF-1R on the plans, ask the local enforcement agency for information about their preferences or requirements for document submittal procedures. For instance:

- Local jurisdictions may allow or require taping CF-1R document sheets to the submitted design drawings for the building; or
- Local jurisdictions may allow or require simply attaching 8-1/2 inch x 11 inch printed CF-1R document reports to the submitted design drawing package; or

- Local jurisdictions may allow or require the CF-1R to be embedded in the building design computer aided drafting (CAD) file for plotting on sheets that are the same size as the building design's plan set sheets, thus the CF-1R documentation would be submitted as energy compliance design sheets integral to the entire plan set for the building.

Mandatory Measures (MF-1R)

- This document is applicable for both prescriptive and performance compliance. This reference list mandatory measures to be part of the building plans along with the Certificate of Compliance to help builders and inspectors reference applicable mandatory measures in the Standards. Alternatively the designer must ensure that all applicable mandatory features are indicated on the plans and specifications.

For low-rise residential buildings for which compliance requires field verification, the CF-1R submitted to the enforcement agency must be a registered copy from a HERS provider data registry. Refer to Section 2.1 and to Reference Residential Appendix RA2 for more information about document registration.

2.3.2 Construction Phase Documentation (CF-6R)

§10-103(a)3 and 4

The installation certificates (CF-6R forms) are organized into separate sections for the Envelope, Mechanical and Lighting measures. The CF-6R's must be completed during the construction phase of the compliance and enforcement process. The CF-6R documents must be completed by the applicable contractors who are responsible for installing regulated energy features such as windows (fenestration), the air distribution ducts and the HVAC equipment, the measures that affect building envelope tightness, the lighting system, and the insulation.

The CF-6R must be signed by the licensed person responsible for the installation. When registration is required, the applicable portions of the CF-6R must be registered copies from a HERS provider data registry.

- **HVAC Systems.** The contractor who installs mechanical equipment signs this part. Heating and cooling equipment are listed and the energy efficiency, capacity, design loads and other properties of each piece of equipment are documented.
- **Water Heating Systems.** This part includes information about the water heating equipment installed in the building, including model number, energy efficiency, tank size, input rating and other properties. The installer also verifies that faucets and shower heads are certified and comply with the appliance standards.
- **Fenestration/Glazing.** This part includes a list of all windows installed in the home. For each, the U-factor, SHGC, area, number of panes, and number of windows of this type in the building are

indicated. This section is signed by the contractor that installs the windows.

- **Duct Leakage and Design Diagnostics.** This part is signed by the contractor responsible for installing the HVAC air distribution ducts and verifying that they comply with the leakage requirements. On this form the contractor includes the results of diagnostic tests, which will later be verified by a third-party inspector (HERS rater).
- **Refrigerant Charge and Airflow Measurement.** This part is signed by the contractor responsible for verifying that split system air conditioner and heat pumps have the correct refrigerant charge. This form contains diagnostic data that are later verified by a third-party inspector (HERS rater).
- **Duct Location and Area Reduction Diagnostics.** This portion of the mechanical section of the CF-6R must be completed and signed by the contractor who installs the HVAC air distribution ducts. It verifies that the installed duct system conforms to the duct system design layout that was submitted to the enforcement agency at plan check. The person responsible for the duct system installation must certify on the CF-6R that installed system features, such as supply register and return grill locations, duct diameters, duct R-values and other duct system design details conform to the duct system layout approved by the enforcement agency. This CF-6R requirement seeks to ensure that the installed duct design conforms to the requirements for energy compliance credit for improved duct design as specified on the CF-1R for the building.
- **Building Envelope Leakage Diagnostics.** This part is completed by the contractor responsible for testing building envelope leakage through pressurization of the house. This form contains test results that will later be verified by a third-party inspector (HERS rater).
- **Insulation Certificate.** This part is completed and signed by the contractor responsible for installing the insulation. This indicates the manufacturer, brand, and thermal properties of insulation installed in the roof, ceiling, walls, and floor.
- **Insulation Quality Checklist.** This part is completed and signed by the insulation contractor when credit is taken for quality insulation installation. This is later verified by a third-party inspector (HERS rater).
- **Lighting Systems.** This part is completed and signed by the contractor responsible for installing hard-wired lighting systems.

Persons responsible for the installations must sign the applicable portion of a CF-6R to certify that the installed features, materials, components, or manufactured devices conform to Title 20 Appliance Efficiency Regulations and Title 24 Building Energy Efficiency Standards. The requirements on the plans and specifications should match the CF-1R documents approved by the local

enforcement agency for the building. The MF-1R shall be on the plans to list the mandatory measures required for the particular project.

The CF-6R must be posted at the job site in a conspicuous location (e.g., in the garage) or kept with the building permit and made available to the enforcement agency upon request.

Field verification and/or diagnostic testing of the feature is required for compliance. Special features section of the CF-1R, the builder or the builder's subcontractor must perform field verification and diagnostic testing of the installation to confirm and document compliance with the Standards following the applicable procedures specified in Reference Residential Appendix RA3 and must also provide a copy of the completed CF-6R to the HERS rater for use during the HERS verification procedure.

When document registration is required, the builder, the builder's subcontractor, or authorized representative must submit the CF-6R information to a HERS provider data registry. When registration is required, all CF-6R information submittals must be done electronically. HERS raters or other authorized users of the HERS provider data registry shall be allowed to facilitate the transmittal/submittal of the Installation Certificate information to the HERS provider data registry website on behalf of the builder or the builder's subcontractor when such facilitation has been authorized by the builder or subcontractor. However, the builder or subcontractor responsible for the installation shall still be required to sign/certify the completed Installation Certificate (CF-6R) to confirm the accuracy of the information, and confirm that the installation complies with the requirements shown on the Certificate of Compliance (CF-1R) for the building. After submittal of the Installation Certificate information to the HERS provider data registry, the builder or subcontractor must access the registered Installation Certificate from the provider data registry, submit an electronic certification/signature to the registry, or sign a copy of the registered Installation Certificate accessed from the registry by the builder or subcontractor's authorized representative, provide a copy of the completed, signed and registered Installation Certificate to the HERS rater, and post a copy of the completed signed registered Installation Certificate at the building site for review by the enforcement agency in conjunction with requests for final inspection for each dwelling unit. The registered copy submitted to the HERS rater may be in paper or electronic format, except that if the builder or subcontractor provides electronic certification/signature directly to the registry, the HERS rater shall have access to a completed, signed and registered copy of the Installation Certificate directly from the registry.

A copy of the completed and registered CF-6R must be left in the building for the building owner to receive at occupancy, and included with the homeowners' manual (see below). The manual serves to provide the homeowner with information about the energy efficiency features installed in their home.

2.3.3 Field Verification and/or Diagnostic Testing Documentation (CF-4R)

§10-103(a)5

Many of the prescriptive requirements and some of the measures that may be used for compliance in the performance approach may require field verification and/or diagnostic testing. This must be performed by a third-party inspector who

is specially trained and independent from the builder or general contractor. The Energy Commission recognizes HERS raters for this purpose.

When field verification and/or diagnostic testing is required, the *Certificate of Field Verification and Diagnostic Testing* (CF-4R) must be completed and signed/certified by the HERS rater. The CF-4R documents include information about the measurements and test results that were required to be performed. The HERS rater must verify that the requirements for compliance credit have been met.

The HERS rater must transmit the CF-4R information to a HERS provider data registry. A registered CF-4R from the provider that has been signed/certified by the rater is made available to the enforcement agency and to the builder when HERS verification confirms compliance. The builder is ultimately responsible for ensuring that the enforcement agency has received the CF-4R prior to the occupancy permit or final inspection.

Raters shall provide a separate registered CF-4R form for each house the rater determines has met the diagnostic requirements for compliance. The HERS rater shall not sign a CF-4R form for a house that does not have a CF-6R signed by the installer. When registration is required, the HERS rater shall not sign a CF-4R for a house that does not have a registered CF-6R that has been signed/certified by the installer. If the building was approved as part of a sample group, the CF-4R will include additional information that identifies whether the building was a tested or a "not tested" building from the sample group.

Refer to Reference Residential Appendix RA2 for more detail on HERS verification and CF-4R documentation procedures.

2.3.4 Compliance, Operating, and Maintenance, and Ventilation Information to be Provided by Builder

§10-103(b)

The final documentation in the compliance and enforcement process is the information that is provided to the homeowner. At the completion of construction and prior to occupancy, the enforcement agency shall require the builder to leave in the building the applicable completed, signed and dated compliance documentation including, at a minimum, the applicable CF-1R forms, and CF-6R forms, and if compliance required HERS verification, the applicable CF-4R forms. When registration is required, these compliance documents shall be registered copies. In addition to the compliance documentation, the builder must leave in the building all operating and maintenance information for all installed features, materials, components, and manufactured devices. The operating and maintenance information must contain the details needed to provide the building owner/occupant with instruction on how to operate the home in an energy-efficient manner and to maintain it so that it will continue to work efficiently into the future.

For individually-owned units in a multifamily building, the documentation must be provided to the owner of the dwelling unit or to the individual(s) responsible for operating the feature, equipment, or device. Information must be for the appropriate dwelling unit or building (paper or electronic copies of these documents are acceptable).

Example 2-1

Question

What is the plan checking/field inspection requirements related to the CF-6R?

Answer

The CF-6R (Installation Certificate) is not required to be submitted with other compliance documentation at the time of permit application, but rather is posted or made available for field inspection. A field inspector will want to check the equipment installed against what is listed on the CF-6R and compare the CF-6R and CF-1R for consistent equipment characteristics.

For a performance approach that relies on duct efficiency improvements or reduced envelope leakage, the field inspector should check the Special Features and Modeling Assumptions and HERS Required Verification listings on the CF-1R for required installer tests for reduced duct leakage or building pressurization and verify that these tests were performed and documented on the Installation Certificate CF-6R.

California Code of Regulations §10-103 allows the enforcement agency to request additional information to verify that the building construction is consistent with approved plans and specifications. When equipment efficiencies above the minimum requirements are shown on the CF-1R (e.g. 13 SEER cooling equipment; 0.63 energy factor water heater), the enforcement agency should have procedures in place to verify efficiency. Requiring proof of efficiency from the installer, such as a copy of the appropriate page from a directory of certified equipment, is one possibility. Another possibility is to require that the applicant send a duplicate of the CF-6R through plan check for verification.

Example 2-2

Question

What happens to the CF-6R after the final inspection?

Answer

California Code of Regulations §10-103 requires the builder provide to the “building owner, manager, and the original occupants the appropriate Certificate(s) of Compliance and a list of the features, materials, components, and mechanical devices installed in the building, and instructions on how to use them efficiently.” At a minimum, information on the CF-6R and CF-1R must be provided to the original building occupants, along with operating and maintenance information.

Example 2-3

Question

As a general contractor, when I have finished building a residence, is there a list of materials I am supposed to give to the building owner?

Answer

The “building owner at occupancy” must receive a copy of the following completed forms for that dwelling unit:

1. Certificate of Compliance (CF-1R)

2. Installation Certificate(s) (CF-6R)

3. Certificate(s) of Field Verification and Diagnostic Testing (CF-4R) if applicable

In addition, they must receive either:

4. Operating information for all applicable features, materials, components, and mechanical devices installed in the building.

5. Maintenance information for all features, materials, components, and manufactured devices that require routine maintenance for efficient operation.

Example 2-4

Question

I built some multifamily buildings and have some questions about the information I must provide (as required by Administrative Regulations, §10-103). Specifically:

If the building is a condominium, can I photocopy the same information for all units?

When the building is an apartment complex (not individually-owned units), who gets the documentation?

If an apartment is converted to condominiums, does each owner/ occupant receive copies of the documentation?

Answer

Photocopied information is acceptable. It must be obvious that the documentation applies to that dwelling unit—that is, the features installed must match the features shown on the Installation Certificate (CF-6R). If compliance documentation is for a “building,” a photocopy of the compliance forms for that building must be provided. If individual compliance is shown for each unique dwelling unit, a photocopy of the documentation which applies to that dwelling unit must be provided. The copies may be in paper or electronic format.

The documentation and operating information is provided to whoever is responsible for operating the feature, equipment, or device (typically the occupant). Maintenance information is provided to whoever is responsible for maintaining the feature, equipment or device. This is either the owner or a building manager (§10-103).

If, during construction, the building changes from an apartment to condominiums, each owner at occupancy would receive the documentation. If an existing apartment building changes to condominiums at a later date, the documentation requirements are triggered only by a building permit application requiring compliance with the Energy Efficiency Standards (changing occupancy does not trigger compliance with the Standards).

2.4 Roles and Responsibilities

2.4.1 Designer

5537 and 6737.1 of California Business and Professions Code

The designer is the person responsible for the overall building design. As such, the designer is responsible for specifying the building features that determine compliance with the building energy efficiency standards and other applicable building codes. The designer is required to provide a signature on the Certificate of Compliance (CF-1R) to certify that the building has been designed to comply with the building energy efficiency standards.

The designer may personally prepare the Certificate of Compliance documents, or may delegate preparation of the energy analysis and Certificate of Compliance documents to an energy documentation author or energy consultant. If preparation of the building energy Certificate of Compliance documentation is delegated, the designer must remain in responsible charge of the building design specifications, energy calculations, and all building feature information represented on the Certificate of Compliance. The designer's signature on the Certificate of Compliance affirms his responsibility for the information submitted on the Certificate of Compliance.

The designer may be an architect, engineer or other California-licensed professional; however, a licensed design professional may not always be required for low-rise residential buildings. The California Business and Professions Code allows unlicensed designers to prepare design documentation for wood-framed single family dwellings as long as the dwellings are no more than two stories in height (not counting a possible basement). Two-story wood-framed multifamily buildings may also be designed by unlicensed designers as long as the building has four or fewer dwelling units.

When the designer is a licensed professional, the signature block on the Certificate of Compliance must include the designer's license number.

When Certificate of Compliance document registration is required, the Certificate of Compliance must be submitted to a HERS provider data registry. All submittals to the HERS provider data registry must be made electronically.

2.4.2 Documentation Author

The person responsible for the design of the building may delegate the energy analysis and preparation of the Certificate of Compliance documentation to a building energy consultant or documentation author. A completed Certificate of Compliance must be submitted to the enforcement agency during the building permit phase. The Certificate of Compliance demonstrates to the enforcement agency plan checker that the building design complies with the requirements of the building energy efficiency standards, thus the building energy features information submitted on the Certificate of Compliance must be consistent with the building design features defined in the plans and specifications for the building submitted to the enforcement agency.

The documentation author is not subject to the same limitations and restrictions of the *Business and Professions Code* as is the building designer because the documentation author is not responsible for specification of the building design features. The documentation author may provide the building designer with recommendations for building energy features and if those recommendations are approved by the building designer, the features must be incorporated into the building design plans and specification documents submitted to the enforcement agency at plan check. The documentation author's signature on the Certificate of Compliance certifies that the documentation he has prepared is accurate and complete, but does not indicate documentation author responsibility for the specification of the features that define the building design. The documentation author provides completed Certificate of Compliance Documents to the building designer who must sign the Certificate of Compliance prior to submittal of the Certificate of Compliance to the enforcement agency at plan check. If registration of the Certificate of Compliance is required, the Certificate of Compliance must be submitted to the HERS provider data registry prior to submittal to the enforcement agency. When document registration is required, only registered Certificates of Compliance that display the registration number assigned to the certificate by a HERS provider data registry are acceptable for submittal to the enforcement agency at plan check.

For a list of qualified documentation authors, visit the *California Association of Building Energy Consultants (CABEC)* website at http://www.cabec.org/ceperosterall.php

2.4.3 Builder or General Contractor

The builder is defined to mean the general contractor responsible for construction. For production homes, the builder may also be the developer with responsibility for arranging financing, acquiring the land, subdividing the property, securing the necessary land planning approvals and attending to the other necessary tasks that are required prior to actual construction. Many production builders are also involved in the marketing and sales of homes after they are constructed.

During the construction process, the builder or general contractor usually hires specialty subcontractors to provide specific services, such as installing insulation, designing and installing HVAC systems, etc. For homes that do not require a licensed design professional, the builder may sign the Certificate of Compliance (CF-1R) in the "Designer or Owner" signature block.

The builder or general contractor must ensure that Installation Certificates (CF-6R) are submitted to the enforcement agency by the person(s) responsible for construction/installation of regulated features, materials, components, or manufactured devices. The builder or general contractor may sign the Installation Certificate on behalf of the specialty subcontractors it hires, but generally, Installation Certificate preparation and signature responsibility resides with the specialty subcontractor who provided the installation services. The Installation Certificate document identifies the installed features, materials, components, or manufactured devices detailed in the plans and specifications and the Certificate(s) of Compliance approved by the local enforcement agency. If the installation requires HERS field verification and diagnostic testing, the Installation Certificate must report the results of any of the installer's required testing of the

regulated installations to measure their performance. The Installation Certificate is required to be posted at the building site for review by the enforcement agency in conjunction with requests for final inspection.

The builder or general contractor must make arrangements for the services of a certified HERS rater if the Certificate of Compliance indicates that third-party field verification and diagnostic testing by a HERS rater is required. The builder or general contractor must ensure that a copy of the Certificate of Compliance that was approved by the designer/owner and submitted to the enforcement agency during the permitting phase is transmitted to the HERS provider and also to the HERS rater who will perform any required field verification and diagnostic testing. Additionally, the builder must ensure that the HERS rater receives a copy of the completed Installation Certificate (CF-6R) that has been signed by the builder employees or subcontractors responsible for the installation that is to be verified by the HERS rater.

When the Standards require registration of the compliance documents, the builder or general contractor must ensure the transmittal/submittal of the required CF-1R information is made to the HERS provider data registry. Also, when installation work is complete, the builder or general contractor must ensure that the persons responsible for the installation work have transmitted/submitted the required Installation Certificate information to the HERS provider data registry. When registration of the Installation Certificate is required, the completed and signed copies posted at the building site for review by the enforcement agency in conjunction with requests for final inspection are required to be registered copies. A copy of the registered Installation Certificate must be made available to the HERS rater.

At final inspection, the builder or general contractor is required to leave in the building all applicable completed, signed and dated compliance documents for the building owner at occupancy. Such information must, at a minimum, include information indicated on the following forms: Certificate of Compliance (CF-1R); Installation Certificate (CF-6R); and for buildings for which compliance requires HERS field verification, Certificate(s) of Field Verification and Diagnostic Testing (CF-4R). These forms must be in paper or electronic format and must conform to the applicable requirements of §10-103(a).

2.4.4 Specialty Subcontractors

Specialty subcontractors provide the builder with services from specific building construction trades for installation of features such as wall and ceiling insulation, windows, HVAC systems and/or duct systems, water heating and plumbing systems, and these subcontractors may perform other trade-specific specialty services during the building construction process. The builder has ultimate responsibility for all aspects of the building's construction and has the authority to complete and sign/certify all sections of the required Installation Certificate (CF-6R) forms; however, the licensed specialty subcontractor should be expected to complete and sign/certify all applicable portions of the Installation Certificate(s) that document the completion of the installation work they have performed for the builder. The subcontractor's responsibility for Installation Certificate documentation should include providing a completed signed copy of all applicable portions of the CF-6R to the builder, posting a completed signed copy of all applicable portions of the CF-6R at the building site for review by the

enforcement agency, and making available to the HERS rater the completed signed copies of the applicable portions of the CF-6R if HERS third-party field verification is required for compliance, as specified on the Certificate of Compliance (CF-1R).

When the Standards require document registration, all copies of the Installation Certificate documentation submitted to the builder, the enforcement agency, and the HERS rater are required to be registered copies prepared in accordance with the procedures described in Reference Residential Appendix RA2 and Section 2.3 of this Residential Compliance Manual.

2.4.5 Enforcement Agency

§10-103

The enforcement agency is the local agency with responsibility and authority to issue building permits and verify compliance with applicable codes and standards. The enforcement agency performs several key roles in the compliance and enforcement process:

Plan check. The enforcement agency performs plan check review of the Certificate of Compliance documentation and of the plans and specifications that define the building design submitted to the enforcement agency at the building permit phase. During plan check, the Certificate of Compliance documentation is compared to the plans and specifications for the building design in order to confirm that the building features that describe the building are specified consistently in all of the documents submitted. If the specification for building design features shown on the Certificate of Compliance does not conform to the specifications shown on the designer's submitted plans and specifications for the building, revision of the submitted documents must be performed to make the design specification consistent in all documents. Thus, if the Certificate of Compliance indicates the building complies, and the features on the Certificate of Compliance are consistent with the features given in the plans and specifications for the building design, then the plan check process can confirm that the building design complies with the building energy code. If it is determined that the building design is in compliance with the building energy code, the enforcement agency may issue a building permit. When the Standards require document registration, the Certificate of Compliance documentation that is submitted to plan check must be a registered document from a HERS provider data registry.

Construction inspection. During the construction of the building, the enforcement agency should make several visits to the construction site to verify that the building is being constructed in accordance with the approved plans and specifications, and energy compliance documentation. As part of this process, at each site visit, the enforcement agency should review any applicable Installation Certificates that have been posted or made available with the building permit(s). The enforcement agency should confirm that the energy efficiency features installed in the house are consistent with the requirements given in the plans and specifications for the building approved during plan check, that the installed features are described accurately on the Installation Certificate(s), and that all applicable sections of the Installation Certificates have been signed by the responsible licensed person(s). The enforcement agency shall not approve a dwelling unit until the enforcement agency has received all applicable Installation

Certificates. When the Standards require registration of the energy compliance documents, all portions of the Installation Certificate documentation applicable to installation work that will require third-party HERS field verification must be registered documentation from a HERS provider data registry.

Corroboration of field verification and diagnostic testing procedures. As described in Reference Residential Appendix Section RA2.4.4, at its discretion, the enforcement agency may require that field verification and diagnostic testing performed by the builder or subcontractors or the certified HERS rater must be scheduled to be performed at a time when the enforcement agency's field inspector can observe the verification or test procedures to corroborate the results reported/documented on the Installation Certificate (CF-6R) and/or the Certificate of Field Verification and Diagnostic Testing (CF-4R).

Sampling within enforcement agency jurisdictions. When sampling is utilized for HERS verification compliance for *newly constructed buildings*, all dwellings in a designated sample group must be located within the same enforcement agency jurisdiction and subdivision or multifamily housing development, as specified in Reference Residential Appendix Section RA2.6.

When sampling is utilized for HERS verification compliance for *alterations*, the dwellings in a designated sample group are not required to be located within the same enforcement agency jurisdiction, and the building owner may choose for the field verification and diagnostic testing to be completed as part of a designated sample group composed of dwelling units for which the same installing company has completed the work that requires field verification and diagnostic testing for compliance, as specified in Reference Residential Appendix Section RA2.8. However, to enable the enforcement agency to schedule testing to accomplish the corroboration described in the previous section, the enforcement agency may choose to require that a separate dwelling unit from the sample group that is located within its jurisdiction be tested.

Final approval. The enforcement agency may approve the dwelling at the final inspection phase of the process if the enforcement agency field inspector determines that the dwelling conforms to the requirements of the building's plans and specifications and Certificate of Compliance documents approved by the enforcement agency at plan check, and meets the requirements of all other applicable codes and standards. For dwelling units that have used an energy efficiency compliance feature that requires Installation Certificate documentation, the enforcement agency shall not approve the dwelling unit until the enforcement agency has received an Installation Certificate that meets the requirements of §10-103(a) that has been completed and signed by the builder or subcontractor. For dwelling units that have used an energy efficiency compliance alternative that requires third party HERS field verification and diagnostic testing, the enforcement agency shall not approve the dwelling unit until the enforcement agency has received a registered copy of the Certificate of Field Verification and Diagnostic Testing that meets the requirements of§10-103(a) that has been signed and dated by the HERS rater. The builder must ultimately take responsibility to ensure that all such required energy compliance documentation has been completed properly and posted at the job site or submitted to the enforcement agency in conjunction with any of the enforcement agency's required inspections. However, the enforcement agency, in accordance with §10-103(d), as prerequisite to approval of the building, must examine all required copies of Installation Certificate (CF-6R) documentation and HERS Certificate of

Field Verification and Diagnostic Testing (CF-4R) documentation posted at the site or made available with the building permits for the required inspections, to confirm that they have been properly prepared and are consistent with the plans and specifications and the Certificate of Compliance documentation approved by the enforcement agency for the building at plan check.

When an alteration has been performed by a participating Third Party Quality Control Program (TPQCP) contractor, the enforcement agency may conditionally approve the building based on the Installation Certificate (CF-6R) if the TPQCP data checking has indicated that the installation complies; however, if subsequent HERS compliance verification procedures determine that re-sampling, full testing or corrective action is necessary for such conditionally approved dwellings in the group, the corrective work must be completed. Refer to Reference Residential Appendix RA2.4.3 and RA2.7 for additional information on TPQCP requirements.

Corroboration of information provided for the owner/occupant. At final inspection, the enforcement agency shall require the builder to leave in the building (for the building owner at occupancy) energy compliance, operating, maintenance, and ventilation information documentation as specified by §10-103(b).

Compliance documents for the building shall, at a minimum, include information indicated on forms: Certificate of Compliance (CF-1R); Installation Certificate (CF-6R); and for buildings for which compliance requires HERS field verification, Certificate(s) of Field Verification and Diagnostic Testing (CF-4R). These forms shall be copies of the documentation submitted to or approved by the enforcement agency, and the copies must conform to the applicable requirements of §10-103(a).

Operating information shall include instructions on how to operate or maintain the buildings energy features, materials, components, and mechanical devices correctly and efficiently. Such information shall be contained in a folder or manual which provides all information specified in §10-103(b). This operating information shall be in paper or electronic format. For dwelling units, buildings or tenant spaces that are not individually owned and operated, or are centrally operated, such information shall be provided to the person(s) responsible for operating the feature, material, component, or mechanical device installed in the building. This operating information shall be in paper or electronic format.

Maintenance information shall be provided for all features, materials, components, and manufactured devices that require routine maintenance for efficient operation. Required routine maintenance actions shall be clearly stated and incorporated on a readily accessible label. The label may be limited to identifying, by title and/or publication number, the operation and maintenance manual for that particular model and type of feature, material, component, or manufactured device. For dwelling units, buildings or tenant spaces that are not individually owned and operated, or are centrally operated, such information shall be provided to the person(s) responsible for maintaining the feature, material, component, or mechanical device installed in the building. This maintenance information shall be in paper or electronic format.

Ventilation information shall include a description of the quantities of outdoor air that the ventilation system(s) are designed to provide to the building's conditioned space, and instructions for proper operation and maintenance of the

ventilation system. For buildings or tenant spaces that are not individually owned and operated, or are centrally operated, such information shall be provided to the person(s) responsible for operating and maintaining the feature, material, component, or mechanical ventilation device installed in the building. This information shall be in paper or electronic format.

Example 2-5

Question

We are an enforcement agency with jurisdiction over the replacement of an HVAC unit's outdoor compressor/condenser unit (an alteration), and the HVAC contractor who pulled the permit for replacing the unit has requested that we approve the final inspection and close out the permit based only on the Installation Certificate (CF-6R) for this job. This job requires HERS verification, and I thought it was necessary to receive the HERS rater's completed and signed Certificate of Filed Verification and Diagnostic Testing (CF-4R) before the job could be considered to be in compliance as a condition to final approval of the installation. Is there an allowance for compliance based only on the CF-6R?

Answer:

Yes. The enforcement agency may provide a "conditional" final approval of the installation based upon the CF-6R for alterations jobs only, and only if the installing contractor is an approved Third Party Quality Control Program (TPQCP) installing contractor. The conditional final approval is allowed if TPQCP data checking has scrutinized the diagnostic test data submitted by the approved contractor's diagnostic test for the installation, and such data checking indicates the installation complies as shown on the CF-6R. The permitee is still required to complete all HERS verification procedures and comply with all HERS verification criteria, and a CF-4R is still required to be submitted to the enforcement agency, builder, and home owner in order for the documentation procedure to be complete. If HERS verification of the approved TPQCP contractor's installation work determines that re-sampling, full testing, or corrective action is necessary to bring the installation into compliance, such work must be completed prior to issuance of the CF-4R. Sampling procedures for HERS verification for installation work performed by an approved TPQCP contractor allows for testing of one sample from a designated group of up to 30 dwellings/installations for which the work was performed by the same approved TPQCP installing contactor. Refer to Reference Residential Appendix sections RA2.4.3, RA2.7 and RA2.8 for additional information on Third Party Quality Control Programs and conditional approvals for alterations that use approved TPQCP contractors.

2.4.6 HERS Provider

http://www.cheers.org

http://www.calcerts.com

http://www.cbpca.org

A HERS provider is an organization that the Energy Commission has approved to administer a HERS program. A HERS provider has responsibility to certify and train raters and maintain quality control over the activities performed by the HERS raters who provide third-party field verification and diagnostic testing on installed energy efficiency features in dwellings when required for compliance with the Standards. In California, currently certified HERS providers are

California Home Energy Efficiency Rating System (CHEERS), California Certified Energy Rating & Testing Services (CalCERTS) and California Building Performance Contractors Association (CBPCA).

The HERS provider must maintain a database (data registry) that incorporates an internet website-based user interface that has sufficient functionality to accommodate the needs of the authorized users of the data registry who must participate in the administration of HERS compliance and building energy standards enforcement activities. The data registry must receive and record information input sufficient to identify and track measures that require HERS verification in a specific dwelling, and must have the capability to determine compliance based on the information from the results of applicable testing or verification procedures reported as input to the registry for the dwelling. When the requirements for compliance are met, the registry must make available a unique "registered" certificate for use in complying with document submittal requirements to enforcement agencies, builders, building owners, HERS raters, and other interested parties. The data registry must have the capability to facilitate electronic submittal of the registered certificates to an Energy Commission document repository for retention of the certificates for use in enforcement of the regulations.

The HERS provider must make available via phone or internet communications interface a way for building officials, builders, HERS raters, and other authorized users of the provider data registry to verify the information displayed on copies of the submitted Certificate(s). Refer to Reference Residential Appendices, Section RA2.4.2 for additional information describing the HERS provider's role and responsibilities.

2.4.7 HERS Rater

The HERS rater is certified by an Energy Commission-approved HERS provider to perform the field verification and diagnostic testing that may be required to demonstrate and document compliance with the Standards. HERS raters receive special training in diagnostic techniques and building science as part of the HERS rater certification process administered by the HERS provider; thus HERS raters are to be considered special inspectors by enforcement agencies and shall demonstrate competence, to the satisfaction of the enforcement agency, to conduct the required visual inspections and diagnostic testing of the regulated energy efficiency features installed in the dwelling.

If the documentation author who produced the certificate of compliance documentation for the dwelling is not an employee of the builder or subcontractor, the documentation author for the dwelling may also act to perform the responsibilities of a HERS rater, provided the documentation author has met the requirements and become certified as a HERS rater, and is associated with one of the Energy Commission-approved HERS providers.

If requested to do so by the builder or subcontractor, the HERS rater may assist the builder or subcontractor in transmitting/submitting the Installation Certificate (CF-6R) information to the HERS provider for registration. However, the HERS rater may not certify the information on an Installation Certificate. The builder or subcontractor responsible for the installation must provide the Installation Certificate certification/signature to confirm the information submitted to the provider data registry, even if the HERS rater has assisted with transmittal of the

data. Refer to Reference Residential Appendix Section RA2.5 for more information that describes these procedures for document registration for which the HERS rater may assist the builder or subcontractor.

The HERS rater is responsible for conducting the field verification and diagnostic testing of the installed special features when required by the Certificate of Compliance (CF-1R). The HERS rater must transmit the results of the field verification and diagnostic testing to the HERS provider data registry. The HERS rater must provide to the registry all information required to complete the Certificate of Field Verification and Diagnostic Testing form, and must also submit a certification/signature to the provider data registry. Whereupon, the registry will make available registered copies of the Certificate of Field Verification and Diagnostic Testing to the HERS rater, the builder, the enforcement agency, and other authorized users of the HERS provider data registry. Printed copies, electronic or scanned copies, and photocopies of the completed, signed, registered Certificate of Field Verification and Diagnostic Testing are allowed for document submittals, subject to verification that the information contained on the copy conforms to the registered document information currently on file in the provider data registry for the dwelling. A completed signed registered copy of the Certificate of Field Verification and Diagnostic Testing (CF-4R) must be posted at the building site for review by the enforcement agency in conjunction with requests for final inspection for each dwelling unit.

For more information on the roles and responsibilities for HERS raters, refer to Reference Residential Appendix Section RA2.4.2.

Example 2-6

Question

May a certified HERS rater, who does the field verification and completes and signs the CF-4R for a dwelling also perform the testing required of the builder or installer to certify compliance with Title 24 installation requirements on the CF-6R?

Answer

Yes. This approach is allowed when the HERS rater is doing field verification for every dwelling (100% testing), but it is not allowed when the HERS rater performs verification utilizing a designated sample group of dwellings. When 100% testing is utilized for HERS verification, the builder or the installer may utilize the information from the HERS rater's verification or diagnostic test results when completing the CF-6R; but when doing so, the builder or installer must be aware that when they sign the certification statement on the CF-6R they are assuming responsibility for the information content on the CF-6R and are certifying that the installation conforms to all applicable codes and regulations. The HERS rater may not sign the CF-6R form and cannot not be assigned the responsibilities of the builder or installer as stated on the CF-6R form and in regulations. If the HERS rater determines that the compliance requirements are not met, the builder or installer must take corrective action to make whatever corrections are necessary. Once corrections have been made and the HERS rater determines that all compliance requirements are met, the builder or installer may certify the work by completing and signing the applicable section of the CF-6R, and the HERS rater can complete the CF-4R documentation for the dwelling.

Note that the HERS rater must complete field verification and diagnostic testing after the measure is completely installed. For duct sealing, drywall must be completely installed before testing. A builder may contract with a certified HERS rater to complete testing at rough-in for quality control purposes, but such testing is not sufficient for meeting compliance requirements and certifications on the CF-4R.

Example 2-7

Question

I heard that there are conflict-of-interest requirements that HERS raters must abide by when doing field verification and diagnostic testing. What are these requirements?

Answer

HERS raters are expected to be objective, independent, third parties when they are fulfilling their duties as field verifiers and diagnostic testers. In this role, they are serving as special inspectors for local enforcement agencies. By law, HERS raters must be independent entities from the builder or subcontractor installer of the energy efficiency features being tested and verified. They can have no financial interest in the installation of the improvements. HERS raters cannot be employees of the builder or subcontractor whose work they are verifying. Also, HERS raters cannot have any financial interest in the builder's or contractor's business or advocate or recommend the use of any product or service that they are verifying. Section 106.3.5 of the CBC prohibits a special inspector from being employed (by contract or other means) by the contractor who performed the work that is being inspected.

The Energy Commission expects HERS raters to enter into a contract with the builder (not with sub-contractors) to provide independent, third-party diagnostic testing and field verification, and the procedures adopted by the Energy Commission call for direct reporting of results to the builder, the HERS provider, and the building official. Although the Energy Commission does not recommend it, a "three-party contract" with the builder is possible, provided that the contract delineates both the independent responsibilities of the HERS rater and the responsibilities of a sub-contractor to take corrective action in response to deficiencies that are found by the HERS rater. Such a "three-party contract" may also establish the role for a sub-contractor to serve as contract administrator for the contract, including scheduling the HERS rater, invoicing, and payment, provided the contract ensures that monies paid by the builder to the HERS rater can be traced through audit. It is critical that such a "three-party contract" preserves rater independence in carrying out the responsibilities specified in Energy Commission-adopted field verification procedures. Even though such a "three-party contract" is not on its face in violation of the requirements of the Energy Commission, the closer the working relationship between the HERS rater and the sub-contractor whose work is being inspected, the greater the potential for compromising the independence of the HERS rater.

CHEERS, CBPCA and CalCERTS have been approved by the Energy Commission to serve as HERS providers to certify and oversee HERS raters throughout the state. These providers are required to provide ongoing monitoring of the propriety and accuracy of HERS raters in the performance of their duties and to respond to complaints about HERS rater performance. In cases where there may be real or perceived compromising of HERS rater independence, they are responsible for providing increased scrutiny of the HERS rater, and taking action to ensure objective, accurate reporting of diagnostic testing and field verification results, in compliance with Energy Commission-adopted procedures.

Building officials have authority to require HERS raters to demonstrate competence to the satisfaction of the building official. Building officials should place extra scrutiny on situations where there may be either real or perceived compromising of the independence of the HERS rater, and exercise their authority to disallow a particular HERS rater from being used in their jurisdiction or disallow HERS rater practices that the building official believes will result in compromising of HERS rater independence.

2.4.8 Third Party Quality Control Program

The Energy Commission may approve Third Party Quality Control Programs (TPQCP) that serve some of the functions of HERS raters for field verification purposes but do not have the authority to sign compliance documentation as a HERS rater.

Third Party Quality Control Programs:

1. Provide training to installers, participating program installing contractors, installing technicians, and specialty Third Party Quality Control Program subcontractors regarding compliance requirements for measures for which diagnostic testing and field verification is required
2. Collect data from participating installers for each installation completed for compliance credit
3. Perform data checking analysis of information from diagnostic testing performed on the participating TPQCP contractors installation work to evaluate the validity and accuracy of the data and to independently determine whether compliance has been achieved
4. Provide direction to the installer to retest and correct problems when data checking determines that compliance has not been achieved
5. Require resubmission of data when retesting and correction is directed
6. Maintain a database of all data submitted by the participating TPQCP contractor in a format that is acceptable and made available to the Energy Commission upon request.

The HERS provider must arrange for the services of an independent HERS rater to conduct independent field verifications of the installation work performed by the participating TPQCP contractor and Third Party Quality Control Program. If group sampling is utilized for HERS verification compliance for jobs completed by a participating TPQCP contractor, the sample from the group that is tested for compliance by the HERS rater may be selected from a group composed of up to 30 dwellings for which the same participating TPQCP contractor has performed the installation work. For alterations, the installation work performed by TPQCP contractors may be approved at the enforcement agency's discretion, based upon a properly completed Installation Certificate (CF-6R) as described in Section 2.4.5 above, on the condition that if subsequent HERS compliance verification procedures determine that re-sampling, full testing or corrective action is necessary for such conditionally approved dwellings in the group, the corrective work must be completed. If the Standards require registration of the

Installation Certificate, the certificate must be a registered copy from a HERS provider data registry.

Refer to Reference Residential Appendix RA2 for additional information about the Third Party Quality Control Program, and for additional information about document registration.

2.4.9 Owner

Building owner means the owner of the dwelling unit. In the context of production homes, the owner is the person or family that the builder sells the house to. In custom homes and remodels, the owner may be the "builder" or developer, and a general contractor, architect, or engineer, etc. may be in their employment.

As part of the compliance process, the owner must receive Compliance, Operating, Maintenance, and Ventilation information documents at the time of occupancy. The enforcement agency must require the builder to leave this information in the building for the building owner at occupancy as specified in §10-103(b).

Example 2-8

Question

What is my responsibility with respect to the CF-6R (Installation Certificate) (a) as an enforcement agency inspector and (b) as a builder?

Answer

(a)The enforcement agency field inspector is responsible for checking the CF-6R during applicable site inspections to be sure it is filled out completely and in conformance with the requirements of §10-103(d), which includes checking for registration when required by the Standards, and confirming that the person responsible for the installation has signed the certificate. Inspectors must verify that the installed features conform to the plans and specifications and the Certificate of Compliance approved by the enforcement agency.

The CF-6R is required to be posted at the job site or kept with the building permit, and must be made available for each appropriate inspection. The enforcement agency field inspector should verify installation certificates during applicable site inspections. It is not advisable to wait until the final inspection to check all CF-6R documentation.

(b)The general contractor, or his/her agent (e.g. the installing contractor) must take responsibility for completing and signing the CF-6R form for the work performed. A homeowner acting as the general contractor for a project is authorized to sign the CF-6R; however, the installing contractor should provide the certification since the CF-6R certification statement is an installer's assurance to the owner that the work has been completed properly and in compliance with applicable codes and regulations. The CF-6R certification statement and signature indicates that the equipment or feature: 1) was installed properly and it confirms the information provided properly identifies the item; 2) is equivalent or more efficient than required by the approved plans (as indicated on the CF-1R); and 3) meets all relevant certification or performance requirements.

Refer to §10-103(a)3A for more information about Installation Certificate requirements.

2.5 HERS Field Verification and Diagnostic Testing

This section describes some of the procedures and requirements for field verification and/or diagnostic testing of energy efficiency features. This section is just an overview; details are available in the documents described below.

Field verification and diagnostic testing is performed by special third-party inspectors called Home Energy Rating System (HERS) raters. The Energy Commission has given this responsibility to the HERS raters, who must be specially trained and certified to perform these services. HERS raters cannot be employees of the builder or contractor whose work they are verifying. Also HERS raters cannot have financial interest in the builder's or contractor's business, or advocate or recommend the use of any product or service that they are verifying.

2.5.1 Measures Requiring HERS Field Verification and Diagnostic Testing

The following features require field verification and/or diagnostic testing:

- Duct Sealing
- Supply Duct Location, Surface Area and R-Value
- Low Leakage Ducts in Conditioned Space
- Low Leakage Air Handlers
- Refrigerant Charge in Split System Air Conditioners and Heat Pumps
- Refrigerant Charge Indicator Display (CID)
- Verified Cooling Coil Airflow
- Air Handler Fan Watt Draw
- High Energy Efficiency Ratio (EER)
- Maximum Rated Total Cooling Capacity
- Evaporatively Cooled Condensers
- Ice Storage Air Conditioners
- Building Envelope Sealing
- High Quality Insulation Installation (QII)
- Quality Insulation Installation for Spray Polyurethane Foam
- PV Field Verification Protocol

Field verification and diagnostic testing is only required when certain regulated efficiency measures or equipment features are installed. If such efficiency measures or equipment features are not installed, then field verification and diagnostic testing is not required. For example, if a dwelling that must comply with the Standards does not have air distribution ducts, then HERS verification of ducts is not required for compliance. Similarly, if a dwelling does not have a split system air conditioner or heat pump, and the building must otherwise comply with package C, D or E, then it is not necessary to have a HERS rater perform a refrigerant charge verification.

2.5.2 Verification, Testing and Sampling

At the builder's option, HERS field verification and diagnostic testing may be completed either for each dwelling unit or for a sample of dwelling units. Sampling is permitted only when multiple dwelling units of the same type are constructed within the same subdivision by the same subcontractor. Sampling may also be utilized for alterations for groups composed of dwellings having the same measure installed that requires HERS verification, and where the same installing contractor has installed the measures. More detail on the sampling procedures is provided in Reference Residential Appendix Section RA2.6.

The builder or subcontractor must provide to the HERS rater a copy of the Certificate of Compliance approved/signed by the principal designer/owner and a copy of the Installation Certificate signed/certified by the builder or subcontractors as specified in Reference Residential Appendix Section RA2.5.

When compliance does not require document registration, the Certificate of Compliance information and Installation Certificate information necessary to identify the dwelling and the dwelling's sample group may be entered into the provider data registry by the HERS rater, using the information from the signed copies provided by the designer/owner and the builder or subcontractor. Alternatively, the information may be submitted electronically to the HERS provider data registry by an authorized user of the registry.

When compliance requires document registration, prior to performing field verification and diagnostic testing, the HERS rater must verify that transmittal to the HERS provider data registry of the Certificate of Compliance information and the Installation Certificate information has been completed for each dwelling unit for which compliance requires HERS verification.

For all HERS verification procedures, the HERS rater must confirm that the Installation Certificate has been completed as required, and that the installer's diagnostic test results and all other Installation Certificate information shows compliance consistent with the requirements given in the plans and specifications and Certificate of Compliance approved by the local enforcement agency for the dwelling.

If field verification and diagnostic testing determines that the requirements for compliance are met, the HERS rater shall transmit the test results and rater certification/signature to the HERS provider data registry, whereupon the provider shall make available a registered copy of the completed and signed Certificate of Field Verification and Diagnostic Testing to the HERS rater, the builder, the enforcement agency, and other approved users of the HERS provider data registry. Printed copies, electronic or scanned copies, and photocopies of the completed, signed and registered Certificate of Field Verification and Diagnostic Testing shall be allowed for document submittals, subject to verification that the information contained on the copy conforms to the registered document information currently on file in the provider data registry for the dwelling.

A completed, signed and registered copy of the Certificate of Field Verification and Diagnostic Testing must be posted at the building site for review by the enforcement agency in conjunction with requests for final inspection for each dwelling unit.

The HERS provider shall make available via phone or internet communications interface a way for building officials, builders, HERS raters, and other authorized users of the provider data registry to verify that the information displayed on copies of the submitted Certificate(s) conforms to the registered document information currently on file in the provider data registry for the dwelling unit.

If the builder chooses the sampling option, the procedures described in Reference Residential Appendix Sections RA2.6.1, RA2.6.2, and RA 2.6.3 must be followed.

2.5.3 Initial Model Field Verification and Diagnostic Testing

The HERS rater must diagnostically test and field verify the first dwelling unit of each model within a subdivision or multifamily housing development. To be considered the same model, dwelling units must have the same basic floor plan layout, energy design, and compliance features as shown on the Certificate of Compliance for each dwelling unit. Variations in the basic floor plan layout, energy design, compliance features, zone floor area, or zone volume, that do not change the HERS features to be tested, the heating or cooling capacity of the HVAC unit(s), or the number of HVAC units specified for the dwelling units, shall not cause dwelling units to be considered a different model. For multi-family buildings, variations in exterior surface areas caused by location of dwelling units within the building does not cause dwelling units to be considered a different model. This initial testing allows the builder to identify and correct any potential construction flaws or practices in the build out of each model. If field verification and diagnostic testing determines that the requirements for compliance are met, the HERS rater will transmit the test results to the HERS provider data registry, whereupon the provider will make available a registered copy of the Certificate of Field Verification and Diagnostic Testing to the HERS rater, the builder, the enforcement agency, and other authorized users of the HERS provider data registry.

2.5.4 Group Sample Field Verification and Diagnostic Testing

After the initial model field verification and diagnostic testing is completed, the builder, or the builder's authorized representative determines which sampling procedure is to be used for the group of dwellings that require HERS field verification. There are two procedures for forming groups and compliance using sampling: (1) sampling of a "closed" group of up to seven dwellings; and (2) sampling of an "open" group of up to five dwellings are described in this section.

Transmittal/submittal of the Installation Certificate information, for at least one dwelling, to the HERS provider data registry, is required in order to "open" a new group. Additional dwellings may be entered into the registry, and included in an "open" group over a period of time, subject to transmittal/submittal of the Installation Certificate information to the registry for each additional dwelling. However the group shall not remain "open" to receive additional dwellings for a period longer than six months from the earliest date shown on any Installation Certificate for a dwelling included in a group. A group may be "closed" at any time after the group has been "opened" at the option of the builder or builder's authorized representative, thus the size of a "closed" group may range from a minimum of one dwelling to a maximum of seven dwellings. When a group

becomes classified as "closed", no additional dwellings shall be added to the group.

Sampling of a "closed" group of up to seven dwellings requires the following conditions to be met as prerequisite to receiving HERS compliance verification for the group:

1. All of the dwelling units contained in the sample group have been identified. Up to seven dwellings are allowed to be included in a "closed" sample group for the HERS compliance verification.
2. Installation of all the measures that require HERS verification has been completed in all the dwellings that are entered in the group, and transmittal or submittal of the Installation Certificate information to the HERS provider data registry for all the dwellings entered in the group has been completed.
3. The group has been classified as a "closed" group in the provider data registry.
4. At the request of the builder or the builder's authorized representative, a HERS rater will randomly select one dwelling unit from the "closed" sample group for field verification and diagnostic testing. If the dwelling unit meets the compliance requirements, this "tested" dwelling and also each of the other "not-tested" dwellings in the group will receive a registered Certificate of Field Verification and Diagnostic Testing.

Sampling of an "open" group of up to five dwellings requires the following conditions to be met as prerequisite to receiving HERS compliance verification for the group:

1. At least one dwelling unit from the sample group has been identified. Up to five dwellings are allowed to be included in an "open" sample group for the HERS compliance verification.
2. Installation of all the measures that require HERS verification shall be completed in all the dwellings that are entered in the group, and transmittal or submittal of the Installation Certificate information to the HERS provider data registry for all the dwellings entered in the group has been completed.
3. At the request of the builder, or the builder's authorized representative, a HERS rater will randomly select one dwelling unit from those currently entered into the "open" sample group for field verification and diagnostic testing. If the dwelling unit meets the compliance requirements, the "tested" dwelling and also each of the other "not tested" dwellings currently entered into the group shall receive a registered Certificate of Field Verification and Diagnostic Testing. If less than five dwelling units have been entered into the group, the group shall be allowed to remain "open" and eligible to receive additional dwelling units. Dwelling units entered into the "open" group subsequent to the successful HERS compliance verification of the "tested" dwelling shall also receive a registered Certificate of Field Verification and Diagnostic Testing as a "not tested" dwelling subject to receipt of the Installation Certificate information by the HERS provider data

registry for the dwelling. The group shall be “closed” when it reaches the limit of 5 dwellings or when the 6 month limit for “open” groups has been exceeded.

The HERS rater must confirm that the Installation Certificates have been completed as required, and that the installer’s diagnostic test results and the Installation Certificate information shows compliance consistent with the Certificate of Compliance for the dwelling unit.

The HERS rater must diagnostically test and field verify the selected dwelling unit, and enter the test and/or field verification results into the HERS provider data registry regardless of whether the results indicate a pass or fail. If the test fails, then the failure must be entered into the provider’s data registry even if the installer immediately corrects the problem. In addition, any applicable procedures for re-sampling, full testing, and corrective action must be followed as described in the next section.

If field verification and diagnostic testing determines that the requirements for compliance are met, the HERS rater will enter the test results into the HERS provider data registry. Whereupon the provider will make available to the HERS rater, the builder, the enforcement agency, and to other approved users of the HERS provider data registry, a registered copy of the Certificate of Field Verification and Diagnostic Testing for the “tested” dwelling, and for all other “not tested” dwelling units entered in the group at the time of the sample test.

The HERS provider is required to “close“ any “open” group within 6 months after the earliest signature date shown on any Installation Certificate for a dwelling entered in the group. When such group closure occurs, the HERS provider shall notify the builder that the group has been “closed,“ and require that a sample dwelling be selected for field verification and diagnostic testing by a HERS rater if field verification has not yet been conducted on a sample dwelling entered in the group.

2.5.5 Re-sampling, Full Testing and Corrective Action

When a failure is encountered during sample testing, the failure must be entered into the provider data registry by the HERS rater. Corrective action must then be taken on the failed dwelling unit, and the dwelling unit must subsequently be retested to verify that corrective action was successful and the dwelling complies. Corrective action and retesting on the dwelling unit must be repeated until the testing determines that the dwelling complies and the successful compliance results have been entered into the HERS provider data registry. Whereupon, a registered Certificate of Field Verification and Diagnostic Testing for the dwelling will be made available to the HERS rater, the builder, the enforcement agency, and other authorized users of the HERS provider data registry. In addition, the HERS rater must conduct re-sampling to assess whether the first failure in the group is unique, or if the rest of the dwelling units in the group are likely to have similar failings.

“Re-sampling” refers to the procedure that requires testing of additional dwellings within a group when the selected sample dwelling from a group fails to comply with the HERS verification requirements.

When re-sampling in a "closed" group, if the testing of a second randomly selected dwelling in the group confirms that the requirements for compliance

credit are met for that unit, then the dwelling unit with the initial failure is not considered to be an indication of failure in the remaining untested dwelling units in the group, and a copy of the Certificate of Field Verification and Diagnostic Testing will be made available for the remaining dwelling units in the group, including the dwelling unit in the re-sample. If the second sample results in a failure, the HERS rater must report the second failure to the HERS provider, and all not yet tested dwelling units in the group must thereafter be individually field verified and diagnostically tested.

Additional information describing the procedures for re-sampling of closed groups of up to 7 dwellings, and the procedures for re-sampling for open groups of up to 5 dwellings are given in Reference Residential Appendix RA 2.6.3.

2.5.6 Installer Requirements and HERS Procedures for Alterations

When compliance for an alteration requires field verification and diagnostic testing, the building owner may choose for the field verification and diagnostic testing to be completed for the dwelling unit individually; or alternatively, as part of a designated sample group of dwelling units for which the same installing company has completed work that requires testing and field verification for compliance. The building owner or agent of the building owner must complete the applicable portions of a Certificate of Compliance. The building owner or agent must make arrangements for transmittal/submittal of the Certificate of Compliance information to the HERS provider, identifying the building features and measures that require HERS verification. The building owner must also arrange to submit an approved/signed copy of the Certificate of Compliance to the HERS rater.

When the installation is complete, the person responsible for the performance of the installation must complete the Installation Certificate.

The HERS rater must perform HERS compliance verification, and if group sampling is utilized for compliance, the sampling procedures described in Reference Residential Appendix RA2.6.2 for sampling of a ”closed” group of up to seven dwellings must be used, requiring that all dwelling units (HVAC systems) within the group have been serviced by the same installing company. The installing company may request a group for sampling that is smaller than seven dwelling units (HVAC units). Whenever the HERS rater for the group is changed, a new group must be established.

Re-sampling, full testing, and corrective action must be completed, if necessary, as specified by Reference Residential Appendix RA2.6.3.

The enforcement agency cannot approve the alteration until the enforcement agency has received a completed Installation Certificate, and a completed Certificate of Field Verification and Diagnostic Testing.

Third Party Quality Control Programs, as specified in Reference Residential Appendix RA2.7, may also be used with alterations, and must be limited to “closed” sample group sizes of thirty dwelling units (HVAC units) or less.

When a Third Party Quality Control Program is used, the enforcement agency may approve compliance based on the Installation Certificate, where data checking has indicated that the unit complies, on the condition that if HERS

compliance verification procedures determine that re-sampling, full testing, or corrective action is necessary, such work shall be completed.

2.5.7 For More Information

More detail on field verification and/or diagnostic testing is provided in the *2008 Residential Appendices*, as described below:

- Reference Residential Appendix RA2 – Residential HERS Verification, Testing, and Documentation Procedures

Example 2-9

Question

Given a multifamily building that has used the Duct Sealing HERS credit for compliance for all the dwelling units in the building, what is the correct sampling procedure for HERS field verification and diagnostic testing for the air distribution ducts?

Answer

If the builder of a multifamily building chooses to comply using sampling, then the sampling is done using groups composed of dwelling units that have utilized the same HERS measures for compliance. Dwellings that do not have the same HERS measures specified for compliance are not allowed to be placed in the same HERS sample group. If the whole-building compliance approach has been used, all dwellings in the building, by default, have the same HERS features specified. However, if unit-by-unit compliance approach has been used, and all dwellings do not utilize the same HERS features for compliance, then only the dwellings that have utilized the same HERS features may be grouped together.

For this example, since duct testing is the only HERS measure specified for all of the dwelling units, all of the dwelling units in the building can be grouped together for purposes of HERS verification requirements. The procedures for assigning dwellings to groups and the HERS verification of a sample from each group must follow the same procedure as for single family dwellings described in Section 2.5.2, and in Reference Residential Appendix RA2.

The first dwelling unit for each model floor plan in the building must be verified by the HERS rater prior to start of formation of sample groups. For multi-family buildings, variations in exterior surface areas caused by location of dwelling units within the building do not cause dwelling units to be considered a different model floor plan. When verifying a dwelling unit, all the duct systems associated with every HVAC unit in the dwelling must be tested in order to determine compliance for that dwelling.

After the HERS verification of the first dwelling of each model floor plan is complete, the HERS rater must randomly select a sample dwelling unit from each group of dwellings that have been formed, and these samples must be tested according to applicable procedures in Reference Residential Appendix RA3, and documented according to procedures in Reference Residential Appendix RA2. In a sampled dwelling unit that is to be tested to confirm compliance, the duct system associated with every HVAC unit in that dwelling unit must be tested. However duct systems do not have to be tested in dwelling units that are not selected for sampling, provided the dwelling that was tested complies. If the tested dwelling in the group complies with the HERS verification, the remaining dwellings in the sample group are certified for compliance based on the results of the sample dwelling test result. Testing must be done on every duct system in a dwelling unit, regardless of whether it appears that the HVAC and duct system are in conditioned space or not. This is akin to a single family residence with one HVAC unit serving upstairs with ducts in the attic and another serving downstairs with ducts between floors.

Defining duct location as "inside" or "outside" for leakage purposes is not described by the locations of walls or the number of stories. The boundary between inside and outside for leakage purposes is defined by the air boundary, typically drywall, between inside and outside. Spaces between floors and spaces in walls (including interior walls) are often "outside" from an air leakage perspective because they are not sealed effectively to form an air barrier and communicate to the outside.

Duct insulation is not required for ducts in conditioned space because there is an expectation that there will be reduced conduction losses for these ducts. But to get full credit for ducts in conditioned space, duct leakage must be tested and meet the requirements for duct sealing. In a multifamily building in order for compliance credit to be taken for ducts in conditioned space, all of the duct systems in the building must be in conditioned space unless compliance is documented for each dwelling unit separately. To meet the mandatory requirements, all HVAC units must have ducts made of UL 181 approved materials (i.e., cased coils). Coils enclosed by sheetrock do not meet the mandatory requirements.

Example 2-10

Question

I am a HERS rater and I would like to verify the refrigerant charge on a split system air conditioner equipped with a TXV. The condensing and the evaporator coils both have Saturation Temperature Measurement Sensors (STMS) installed on them. Am I required to use the STMS for charge verification or can I use refrigerant pressure gauges to determine the saturation temperatures?

Answer

No, you do not have to use the STMS to determine the saturation temperatures; you can use either STMS or refrigerant pressure gauges to determine the saturation temperatures.

Example 2-11

Question

If in the example (Example 2-10) above, the STMS are not installed, is the HERS rater allowed to use refrigerant pressure gauges to determine the refrigerant charge?

Answer

Yes, the raters can use the gauges if they are chlorofluorocarbons (CFC) certified. If the STMS are not installed, and the rater is not CFC certified, he/she cannot perform refrigerant charge verification.

3 Building Envelope Requirements

The building envelope is responsible for the most significant loads that affect heating and cooling energy use. The principal components of heating loads are building envelope infiltration as well as conduction losses through building envelope components – including walls, roofs, floors, slabs, windows and doors. Solar gains through the windows dominate cooling loads in conditioned buildings, but loads through the ceiling/roof and walls are also significant.

3.1 Overview

3.1.1 Introduction

The Standards have both mandatory measures and prescriptive requirements that affect the design of the building envelope. The mandatory measures and prescriptive requirements establish a minimum performance level, which can be exceeded by other compliance options and construction practices resulting in greater energy savings.

Common strategies for exceeding the minimum energy performance level include the use of better components such as more insulation, higher efficiency windows, housewrap, radiant barriers, and higher efficiency heating, cooling and water heating equipment.

Design and construction practice options are discussed later in this chapter.

Those compliance options that are recognized for credit in the performance approach are called *compliance options*. Compliance options have eligibility criteria that must be satisfied before compliance credit is offered. Design options that save energy but for which there is no compliance credit are also discussed.

For the building envelope, field verification and diagnostic testing procedures exist for insulation quality and for reduced infiltration, and both are compliance options. Field verification and diagnostic testing is a way to ensure that the energy efficiency that shows up in the calculations and on the plans makes its way to the homeowner.

Following this overview, this chapter is organized by building system or building envelope component, as follows:

- Fenestration, including windows, doors, and skylights
- Insulation
- Thermal Mass
- Infiltration and Air Leakage
- Vapor Barriers and Moisture Protection
- Roofing Products (Cool Roof)

Within each of these sections, the material is generally organized as follows:

- Mandatory measures
- Prescriptive requirements
- Compliance options
- Compliance and enforcement

3.1.2 Building Orientation

The following definitions of east-, north-, west-, and south-facing apply only to the prescriptive packages and master plans analyzed according to the multiple orientation. In the computer methods the actual building orientation must be used, except in the case of master plans as stated above.

East-Facing

"East-facing is oriented to within 45 degrees of true east, including 45°0'0" south of east (SE), but excluding 45°0'0" north of east (NE)." [§101]

The designation “East-Facing” is also used in production buildings using orientation restrictions (e.g., Shaded Areas: East-Facing).

North-Facing

"North-facing is oriented to within 45 degrees of true north, including 45°0'0" east of north (NE), but excluding 45°0'0" west of north (NW)." [§101]

South-Facing

"South-facing is oriented to within 45 degrees of true south, including 45°0'0" west of south (SW), but excluding 45°0'0" east of south (SE)." [§101]

The designation “South-Facing” is also used in production buildings using orientation restrictions (e.g., Shaded Areas: East-Facing).

West-Facing

"West-facing is oriented to within 45 degrees of true west, including 45°0'0" due north of west (NW) but excluding 45°0'0" south of west (SW)." [§101]

The designation “West-Facing” is also used in production buildings using orientation restrictions (e.g., Shaded Areas: West-Facing).

3.1.3 What’s New for 2008

With the 2005 Standards, the maximum fenestration area was modified, credit is offered for insulation construction quality, and high performance replacement windows are required in existing homes. With the 2008 update to the Standards, the fenestration U-factor has been reduced for most climate zones in Package C and Package D. The SHGC has also been reduced in selected climate zones in these Packages. Package E is new for the 2008 and is for fenestration products

with higher U-factors but with enhanced structural characteristics; the new package is shown to have energy equivalency Package D.

Fenestration

With the 2008 update to the Standards, the Package C U-factors are set at 0.38 for all climate zones. For Package D, the U-factors are set at 0.40 for all climate zones. In addition, in Package C there are new 0.40 SHGC requirements in climate zones 3, 5, and 6; in Package D, there are new 0.40 SHGC requirements in climate zones 5 and 6, and in climate zone 15 the SHGC has been reduced to 0.35.

One of the impacts of lower U-factors and SHGC is that the amount of credit available for installing high performance fenestration products has been significantly reduced. Prior to the 2008, high performance glazing option was used to avoid duct sealing and other prescriptive measures that required third party field verification; under the 2008 Standards, this option may not be as attractive as the amount of credit for installing high performance fenestration is reduced.

In Package E the U-factors are higher (less efficient); however, the SHGC are equal or lower than Package C and Package D. Therefore; Package E provides improvements to other energy features thus showing overall equivalency to Package D. The Package E allows more flexibility using window product in a home by providing offsetting improvements to other conservation measures. The new package is shown to have energy equivalency to Package D.

All manufactured fenestration must meet the minimum efficiency in the prescriptive packages. Manufactured fenestration not certified by NFRC must use the CEC Default values found in Table 116-A and Table-116-B in the Standards and documented according to §10-111 labeling requirements. Only Package E has fenestration U-factors high enough that some default table window U-factors are compliant. In climate zones where there is a SHGC requirement, no fenestration that is not NFRC certified can meet the SHGC requirement. The prescriptive packages do allow a very small area of non-compliant fenestration to be installed; see Section 3.2.3 for more information.

Roofing Products (Cool Roof)

Roofing products with high solar reflectance and thermal emittance are referred to as “cool roof” which is the outer layer of a roof. Cool roofs are now a prescriptive requirement for both low-slope and steep-slope roof application on a residential buildings. To be considered a cool roof the roofing products must be tested and labeled by the Cool Roof Rating Council (CRRC).

Also, Solar Reflectance Index (SRI) is a new concept in the 2008 Standards; in lieu of meeting a thermal resistance and an aged solar reflectance requirement, compliance can be shown by meeting a minimum SRI. To calculate the SRI the 3-year aged value of the roofing product must be used. By using the SRI calculator, a cool roof may comply with an emittance lower than 0.85 as long as the aged reflectance is higher; alternately, SRI can be used to demonstrate compliance by trading off a lower aged solar reflectance with a higher thermal emittance.

3.2 Fenestration

Windows, glazed doors, and skylights have a significant impact on energy use in a home. They may account for up to 50 percent of residential space heating loads, and for homes that are air-conditioned, up to 50 percent of the cooling load. The size, orientation, and types of fenestration products can dramatically affect the overall energy performance of a house. Glazing type, orientation, shading and shading devices not only play a major role in the building's energy use but can affect the operation of the HVAC system and the comfort of the occupants.

3.2.1 Relevant Sections in the Standards

The Standards deal with fenestration in several ways and in several places:

1. §10-111 (Administrative Standards) establishes the rules for rating and labeling fenestration products and establishes the NFRC as the supervising authority.
2. §116(a)1 sets air leakage requirements for all manufactured windows whether they are used in residential or nonresidential buildings.
3. §116(a)2 and 3 require that the U-factor and the solar heat gain coefficient (SHGC) for manufactured fenestration products be determined using NFRC procedures or use default fenestration values in Standards Table 116-A and Table 116-B.
4. §116(a)4 requires that manufactured fenestration products have both a temporary and permanent label. The temporary label shall show both the U-factor and the SHGC and verify that the window complies with the air leakage requirements.
5. §116(b) has default U-factors and SHGC values that are to be used for field-fabricated fenestration and exterior doors that do not have an NFRC rating.
6. §117 requires that openings around windows and doors be caulked, gasketed, weatherstripped or otherwise sealed to limit air leakage.
7. §151(f)3 Exception allows up to 3 ft^2 of the glazing installed in doors and up to 2 ft^2 of tubular skylight with dual-pane diffusers to have an assumed U-factor equivalent to the Package requirements.
8. §151(f)3 and 4 have the prescriptive requirements for fenestration in low-rise residential buildings. These include requirements for maximum glazing area, maximum U-factor, and for some climate zones, a maximum SHGC requirement.

9. §152(a) sets the fenestration area requirements for residential additions and requires that new windows meet the prescriptive requirements.
10. §152(b) establishes that replacement windows in existing residences meet the prescriptive requirements. Performance compliance options (existing plus alteration) are also available.

3.2.2 Mandatory Measures

The Standards define three types of fenestration products that face different mandatory measures:

- **Manufactured products** are delivered pre-assembled from the factory. This is the most common type of fenestration in residential construction.
- **Site-built products** are glazed or assembled on site using factory prepared systems. These are more common in nonresidential construction and include storefront and curtainwall systems. The glazing contractor may also pre-assemble site-built fenestration at his or her shop before final installation. For unlabeled site-built fenestration use default values from Standards Table 116-A for U-factor and Table 116-B for SHGC, otherwise, select site-build fenestration from NFRC's Certified Products Directory. See http://www.NFRC.org.
- **Field-fabricated products** are built on site using standard dimensional lumber or other materials not intentionally prepared for use as a fenestration product. For field-fabricated fenestration use default values from Standards Table 116-A for U-factor and Table 116-B for SHGC.

Complete definitions can be found in the Reference Joint Appendices JA1.

Air Leakage

§116(a)1

Manufactured Fenestration Products. Manufactured fenestration products, including exterior doors, must be tested and certified to leak not more than 0.3 cubic feet per minute (cfm) per ft² of window area. For a window that has an area of 10 ft², the maximum leakage would be 10 ft² times 0.3 cfm/ft² or a total leakage of 3 cfm. This is equal to about 86 in³ per second or about a quart and a half of air each second. This mandatory measure applies to all manufactured windows whether they are used in new residential or nonresidential buildings.

To determine leakage, the test procedure that manufacturers use is either NFRC 400 or ASTM E283, which are essentially the same.

Site-built Products. There are no specific air leakage requirements for site-built fenestration products, the Standards require limiting air leakage through weatherstripping and caulking.

Field-fabricated Products. No testing is required for field-fabricated fenestration products; however, the Standards require limiting air leakage through weatherstripping and caulking.

Exterior Doors. Exterior doors must meet the following requirements:

- Manufactured exterior doors must be certified as meeting an air leakage rate of 0.3 cfm/ft² of door area of §116(a)1, which is the same as windows.
- They must comply with the requirements of §117, as described below in "Joints and Other Openings," e.g., they must be caulked and weatherstripped if field-fabricated.
- Any door that is more than one-half glass is a fenestration product and must comply with the mandatory and prescriptive measures and other Standards requirements for fenestration products.

U-factor and SHGC Ratings

§116(a)2 and §116(a)3
Table 116-A
Table 116-B

Manufactured Fenestration Products. The mandatory measures require that both the U-factor and the SHGC of manufactured fenestration products be determined from NFRC's Certified Product Directory or from Energy Commission-approved default tables. At the time of inspection, the actual fenestration U-factor and SHGC values as shown on NFRC labels or in the default tables must result in equal or lower overall energy consumption than the values indicated on the compliance documents. The default U-factors are contained in Standards Table 116-A, and the default SHGC values are contained in Standards Table 116-B (also in Appendix B of this compliance manual). A directory of NFRC certified ratings is available at http://www.NFRC.org.

Commission default values in both Standards Tables 116-A and 116-B are on the poor side of the performance range for windows. To get credit for advanced window features such as low-e (low-emissivity) coatings and thermal break frames, the window manufacturer must have the window tested, labeled, and certified according to NFRC procedures. Figure 3-1 shows an example of an NFRC-approved temporary fenestration label.

Figure 3-1 – NFRC Temporary Label

Requiring that SHGC and U-factor be calculated using a common procedure ensures that the performance data for fenestration products are more accurate and that data provided by different manufacturers can be more easily compared. The test procedure for U-factor is NFRC 100, and the test procedure for SHGC is NFRC 200.

Site-built Fenestration Products. For low-rise residential construction, site-built products are treated the same as manufactured products: U-factor and SHGC values must come from NFRC ratings or from Standards Tables 116-A and 116-B. Note that different alternative default values apply to nonresidential projects; default values may be found in the Reference Nonresidential Appendices NA6.

Field-fabricated Products §116(b). Field-fabricated fenestration must always use the Energy Commission default U-factors from Standards Table 116-A and SHGC values from Table 116-B.

For non-field-fabricated products, acceptable methods of determining U-factor are shown in Table 3-1. Acceptable methods of determining SHGC are shown in Table 3-2.

Table 3-1 – Allowable Methods for Determining U-factors

Fenestration Category			
U-factor Determination Method	Manufactured Windows	Site-Built Fenestration	Field-Fabricated Fenestration
NFRC-100	✓	✓	N/A
Standards Table 116-A	✓	✓	✓

Table 3-2 – Methods for Determining Solar Heat Gain Coefficients

Fenestration Category			
SHGC Determination Method	Manufactured Windows	Site-Built Fenestration	Field-Fabricated Fenestration
NFRC-200	✓	✓	N/A
Standards Table 116-B	✓	✓	✓

Temporary and Permanent Labels

See §10-111(a) and §116(a)4

Manufactured Fenestration Products. The Standards require that manufactured windows have both temporary and permanent labels that show the NFRC performance characteristics. The temporary label shows the U-factor and SHGC, for each rated window. The label must also show that the window meets the air infiltration criteria. The temporary label must not be removed before inspection by the enforcement agency.

The permanent label must, at a minimum, identify the certifying organization and have a number or code to allow tracking back to the original information on file with the certifying organization. The permanent label also can be inscribed on the spacer, etched on the glass, engraved on the frame, or otherwise located so as not to affect aesthetics.

Site-Built Fenestration Products. Labeling requirements apply to site-built fenestration products as well, except that a label certificate may be provided in accordance with NFRC 100 in place of an attached temporary label. The label certificate is a document that verifies the performance of the site-built fenestration product but that is not physically attached to the product. The label certificate is kept at the job site by the contractor for field inspector verification.

Field-Fabricated Fenestration Products. A label is not required for field-fabricated fenestration products, but must use the default values in Table 116-A and Table 116-B from the Standards.

Example 3-1

Question

My home will have a combination of window types, including fixed, operable, wood, metal, etc., some of which are field-fabricated. What are the options for showing compliance with the Standards?

Answer

For field-fabricated windows, you must select U-factors and SHGC values from the default tables (Tables 116-A and 116-B from the Standards). Windows that are not field-fabricated must be labeled, either with an NFRC label or with a manufacturer's label that certifies the window to have a U-factor and SHGC from the default tables (again, Tables 116-A and 116-B). The manufacturer must label the window in accordance with §116(a)4. If the U-factors or SHGC values do not comply with the prescriptive requirements, the performance method must be used (see Chapter 7). To simplify data entry into the compliance software, you may choose the U-factor from Table 116-A that is the highest of any of the windows and use this for all windows. However, you must use the appropriate SHGC from Table 116-B for each window type individually.

Example 3-2

Question

When windows are labeled with a default value, are there any special requirements that apply to the label?

Answer

There are two criteria that apply to fenestration products labeled with default values. First, the Administrative Regulations (§10-111) require that the words “CEC Default U-factor” and “CEC Default SHGC” appear on the temporary label in front of or before the U-factor or SHGC (i.e., not in a footnote). Second, the U-factor and SHGC for the specific product must be listed. If multiple values are listed on the label, the manufacturer must identify, in a permanent manner, the appropriate value for the labeled product. Marking the correct value may be done in the following ways only:

1. Circle the correct U-factor and SHGC (permanent ink);

2. Black out all values except the correct U-factor and SHGC (permanent ink); or

3. Make a hole punch next to the appropriate values.

Example 3-3

Question

What U-factor do I use for an operable metal framed, glass block? What solar heat gain coefficient do I use for clear glass block? Does it need a label?

Can I use the default clear glass SHGC values for tinted windows?

Answer

For glass block, use the U-factor and SHGC values from Standards Tables 116-A and 116-B for the frame type in which the glass blocks are installed. The worst-case scenario would be a metal-framed glass. The U-factor for metal framed glass block is from Table 116-A is therefore 0.87. The SHGC depends on whether the glass block has a metal or non-metal frame, and is operable or fixed or clear or tinted. For this example, the glass block is operable and clear, therefore the SHGC is 0.70. Glass block is considered a field-fabricated product and therefore does not need a label.

Yes, since using the default clear glass SHGC for tinted windows results in a net energy savings, these default values may be used for tinted windows.

Example 3-4

Question

Is there a default U-factor for the glass in sunrooms?

Answer

Yes. For the horizontal or sloped portions of the sunroom glazing, use the U-factor for skylights. For the vertical portions, use the U-factors for fixed windows, operable windows, or doors, as appropriate. As a simplifying alternative, the manufacturer may label the entire sunroom with the highest U-factor of any of the individual fenestration types within the assembly.

Example 3-5

Question

How are various door types treated in compliance documentation for U-factor and SHGC? How can I determine a U-factor and SHGC for doors when less the 50% of the door area is glass?

Answer

All doors with glass area greater than 50% of the door area, which includes French doors, are defined as fenestration products and are covered by the NFRC Rating and Certification Program. You may use either an NFRC-rated U-factor or a default glazed door U-factor from Table 116-A. The fenestration area for compliance documentation is the entire rough opening of the door (not just the glass area).

The SHGC for doors with glass area more than 50% may be determined in one of two ways:

1. Use the NFRC rated and labeled SHGC.

2. Refer to Standards Table 116-B. The SHGCs in this table have been pre-calculated based upon glazing type and framing type.

Doors with less than 50% glass areas are treated as a door with fenestration installed within the door. The glass area is calculated as the sum of the glass areas plus two inches on all sides (to account for framing). For prescriptive or performance approaches, use one of the following options for U-factor and SHGC:

• The NFRC label if one is available, or

• The default values from Standards Table 116-A and 116-B

The opaque part of the door is ignored in the prescriptive approach. If the performance approach is used for the glazing part of the door, an NFRC label or default values for U-factors and SHGC must be used, for the opaque portion of the door, a default value of 0.50 must be assumed. Alternatively, if available, NFRC values for U-factor and SHGC may be used for the entire door, including the opaque areas.

Example 3-6

Question

As a manufacturer of fenestration products, I place a temporary label with the air infiltration rates on my products. Can you clarify which products must be tested and certified?

Answer

Each product line must be tested and certified for air infiltration rates. Features such as weather seal, frame design, operator type, and direction of operation all affect air leakage. Every product must have a temporary label certifying that the air infiltration requirements are met. This temporary label may be combined with the temporary U- factor label.

Example 3-7

Question

Is a custom window “field-fabricated” for purposes of meeting air infiltration requirements?

Answer

No. Most custom windows are manufactured and delivered to the site either completely assembled or “knocked down,” which means they are a manufactured product. A window is considered field-fabricated when the windows are assembled at the building site from the various elements that are not sold together as a fenestration product (i.e., glazing, framing and weatherstripping). Field-fabricated does not include site-assembled frame components that were manufactured elsewhere with the intention of being assembled on site (such as knocked down products, sunspace kits, and curtain walls).

Example 3-8

Question

What constitutes a “double-pane” window?

Answer

Double-pane (or dual-pane) glazing is made of two panes of glass (or other glazing material) separated by space (generally 1/4" [6 mm] to 3/4" [18 mm]) filled with air or other gas. Two panes of glazing laminated together do not constitute double-pane glazing.

Example 3-9

Question

To get daylight into a room in my new house, I plan on installing a tubular skylight using the performance approach. The skylight has a clear plastic dome exterior to the roof, a single pane ¼-in. (6 mm)-thick acrylic diffuser mounted at the ceiling, and a metal tube connecting the two. How do I determine the U-factor and SHGC that I will need to determine if I can comply with the Standards, if U_c is 1.20 and $SHGC_c$ is 0.85?

Answer

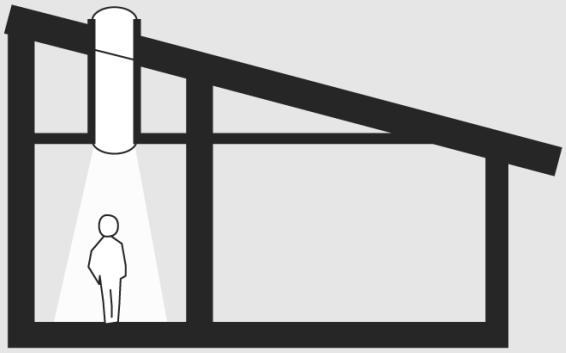

Tubular skylights are an effective means for bringing natural light into interior spaces. As a manufactured product, tubular skylights must have a temporary label.

There are three methods available for determining the U-factor for tubular skylights. The first is to use the default U-factor from Standards Table 116-A. This tubular skylight would be considered a metal frame, fixed, single-pane resulting in a U-factor of 1.19, which must appear on a label preceded by the words “CEC Default U-factor.” (A tubular skylight would have to have two panes of glazing with an air space of less than 2 inches (50 mm) between them at the plane of the ceiling insulation for it to be considered double-pane.)

The second method is to determine the U-factor from the Reference Nonresidential Appendix NA6, Equation NA6-1. The U-factor for this tubular skylight is based on the metal with no curb (Table NA-1). The U-factor for this skylight using Equation NA6-1 is 1.25, where U_t = (0.195 + (0.882 x 1.20)). This must appear on a label stated as “CEC Default U-factor 1.25.”

The third and best method, applicable if the skylight has been tested and certified pursuant to NFRC procedures, requires a label that states, “Manufacturer stipulates that this rating was determined in accordance with applicable NFRC procedures NFRC 100” followed by the U-factor.

There also are three methods available for determining SHGC. The first is to use the default table SHGC in Standards Table 116-B. This tubular skylight would be considered a metal frame, fixed, clear, single-pane product resulting in an SHGC of 0.83, which must appear on a label stated as "CEC Default SHGC 0.83."

The second method also determines the SHGC from the Reference Nonresidential Appendix NA6, Equation NA6-2. The SHGC for this skylight using Equation NA6-2 is 0.81, where

$SHGC_t$ =(0.08 + (0.86 x 0.85)). This must appear on a label stated as "CEC Default SHGC 0.81."

The third method, applicable if the skylight has been tested and certified pursuant to NFRC procedures, requires a label that states, "Manufacturer stipulates that this rating was determined in accordance with applicable NFRC procedures NFRC 200 followed by the skylight's SHGC.

Example 3-10

Question

How would the U-factor and the SHGC be determined if the skylight in the example above has a dual pane diffuser (instead of single pane) mounted at the ceiling?

Answer

The procedure would be exactly the same as the example above, except that double pane U-factor and SHGC values from Standards Tables 116-A and 116-B would be used instead of single pane values. Note that up to 2 ft^2 of tubular skylight is assumed to have the U-factor required to meet prescriptive compliance or the Package D value for performance compliance (Exception to §151(f)3A).

3.2.3 Prescriptive Requirements

Prescriptive requirements described in this chapter typically refer to Package D. For a list of Package C and Package E features, refer to Tables 151-B and 151-D of the Standards (also in Appendix B of this document).

The prescriptive requirements specify a maximum U-factor, and in climate zones where air conditioning is common, a maximum SHGC. In addition, the prescriptive requirements limit total glass area to a maximum of 20 percent of the conditioned floor area and west-facing glass to a maximum of 5 percent of the conditioned floor area in climate zones 2, 4, and 7-15. West-facing fenestration area includes skylights tilted to the west or tilted in any direction when the pitch is less than 1:12 (§151(f)3C).

Fenestration U-factor

With the 2008 update, the U-factor prescriptive Package D requirement for all climate zones is 0.40 or lower (see Table 3-3 for all packages U-factor requirements). However, for each building, up to 3 ft^2 of the glazing installed in doors and up to 2 ft^2 of tubular skylights with dual-pane diffusers at the ceiling are exempt from the prescriptive U-factor requirements. See Exception §151(f)3A. When using the prescriptive criteria, some windows may exceed the prescriptive requirement as long as the area-weighted average U-factor meets the requirement. Decorative or stained glass is an example that might not meet the prescriptive requirements unless weight-averaged with other fenestration. To calculate weight-averaged U-factors for prescriptive envelope compliance, see Form WS-2R in Appendix A of this manual.

The U-factor criterion applies to both windows and skylights. Most skylights are mounted on a curb, and the U-factor of such skylights according to NFRC procedures includes heat loss through a standardized portion of curb included in the tests. NFRC 100 includes the following:

If a skylight can be installed using more than one of the installation methods listed below, the skylight product line shall include all the pertinent options as individual products. The method in which a skylight is mounted will affect its U-factor. Mounting variations include these:

1. Inset mount, where the curb of the skylight extends into the rough opening on the roof;
2. Curb mount, where the outside of the curb is equal to the rough opening in the roof; and
3. Curb mount, where the inside of the curb is equal to the rough opening in the roof.

NRFC 100 also states the following:

11. Curb mounted skylights that do not have an attached integral curb when manufactured shall be simulated and tested installed on a nominal 2 x 4 (actual size 40.0 mm x 90.0 mm or 1.5 in. x 3.5 in.) wood curb made from Douglas Fir, with no knots.
12. The heat transfer characteristics of site-built curbs are not included in the NFRC rating and must be modeled as a part of the opaque building envelope. For compliance purposes with the low-rise residential standards, the U-factor for a skylight rated with any of the three mounting variations described above is applied to the area of the rough opening.

U-factors for skylights are therefore significantly higher than they are for windows, even when the construction of the skylight and the window are similar. This means that skylights will not generally comply with the prescriptive requirements, and any building that uses skylights will be forced to use the performance approach unless weight-averaging with other fenestration is used.

Table 3-3 – Maximum U-factors by Climate Zone in Packages C, D and E

Climate Zone	1	2-15	16
Package C - Maximum U-factor	0.38	0.38	0.38
Package D - Maximum U-factor	0.40	0.40	0.40
Package E - Maximum U-factor	0.50	0.57	0.45

SHGC

The standards set a maximum SHGC of 0.40 for homes constructed in all climate zones except 1, 3, and 16 where there are no SHGC requirements. The maximum SHGC requirements are in the climate zones where homes are more likely to be air conditioned. This requirement applies to the fenestration product without consideration of insect screens or interior shading devices. Other than skylights, the SHGC of windows and doors can be weight-averaged to meet the prescriptive requirement. West-facing glazing may not be averaged with non-west facing glazing. Weight-averaging must be done within the limitations on west-facing area allowance in §151(f)3C. The SHGC of all west-facing glazing may be averaged. The SHGC of all non-west-facing glazing may be averaged. Skylights must meet

the SHGC requirement without weight-averaging. However, the skylight area and required SHGC must be included with calculations of the west-facing area.

A window or fenestration product that meets the SHGC criterion will typically have a special low-e coating that reduces solar gains. The coating also has other benefits, such as reducing the admittance of UV energy, which is the principal cause of fabric fading.

While a low-e coating is the most common way to comply with the SHGC requirements, the Standards offer other options: use an exterior shade screen or louver on the outside of the window or, for south facing windows, use a properly sized overhang. Both sunscreens and overhangs are discussed in the Compliance Options section.

Figure 3-2 – Package D SHGC Criteria by Climate Zone

Table 3-4 – Package C, D and E SHGC Criteria by Climate Zone

Package C											
Climate Zone	1, 16	3	4	5	6	7	8, 9	10	2, 11-13	14	15
Maximum Solar Heat Gain Coefficient (SHGC)	NR	0.40	0.40	0.40	0.40	0.40	0.40	0.40	0.40	0.40	0.40
Maximum total area	14%	14%	14%	16%	14%	14%	14%	16%	16%	14%	16%
Maximum West facing area	NR	NR	5%	NR	NR	5%	5%	5%	5%	5%	5%

Package D																
Climate Zone	1	2	3	4	5	6	7	8	9	10	11	12	13	14	15	16
Maximum Solar Heat Gain Coefficient (SHGC)	NR	0.40	NR	0.40	0.40	0.40	0.40	0.40	0.40	0.40	0.40	0.40	0.40	0.40	0.35	NR
Maximum total area	20%	20%	20%	20%	20%	20%	20%	20%	20%	20%	20%	20%	20%	20%	20%	20%
Maximum West facing area	NR	5%	NR	5%	NR	NR	5%	5%	5%	5%	5%	5%	5%	5%	5%	NR

Package E																
Climate Zone	1	2	3	4	5	6	7	8	9	10	11	12	13	14	15	16
Maximum Solar Heat Gain Coefficient (SHGC)	NR	0.40	0.40	0.25	0.40	0.40	0.25	0.40	0.40	0.40	0.25	0.25	0.30	0.25	0.25	NR
Maximum total area	20%	20%	20%	20%	20%	20%	20%	20%	20%	20%	20%	20%	20%	20%	20%	20%
Maximum West facing area	NR	5%	NR	5%	NR	NR	5%	5%	5%	5%	5%	5%	5%	5%	5%	NR

Window Area

§101(b)

§151(f)3C

§151(e)

With the prescriptive requirements of Package D and E, window area is limited to a maximum of 20 percent of the conditioned floor area in all climate zones. In Package C the maximum is 14% in climate zone 1, 3, 4, 6-9, 14 and 16% in climate zone 2, 5, 10-13 and 15. Package C, D and E in climate zones 2, 4, and 7 through 15, the window area facing west is limited to a maximum of 5 percent of the conditioned floor area.

The west-facing area requirement is intended to reduce peak demand, since west-facing windows have more solar gain during the peak cooling period and contribute more to the peak cooling load.

Rules for Doors that include Glass Areas

§116

The following rules apply to doors that have glass areas embedded in them.

1. Any door that is more than one-half glass is a fenestration product and must comply with the mandatory and prescriptive measures and other Standards requirements for fenestration products.

2. In the prescriptive approach, doors with less than 50 percent glass area, the U-factor and SHGC shall be based on either the NFRC values for the entire door including glass area, or use default values in Table 116-A or Table 116-B from the Standards. The opaque part of the door is ignored in the prescriptive approach.
3. In the performance approach, for doors with less than 50 percent glass area, the U-factor shall be based on either the NFRC values for the entire door including glass area, or a default U-factor of 0.50 for the opaque portion. The glass area of the door shall be calculated as the sum of all glass surfaces plus 2 inches on all sides of the glass (to account for a frame); the opaque area of the door shall be considered the total door area minus this calculated glass area. If the default U-factor is used for the opaque portion, then the glass area shall be modeled under the rules for fenestration. Doors with 50 percent or more glass area shall be modeled under the rules for fenestrations using the total area of the door.

In the prescriptive approach, the glass area of the door, calculated as the sum of all glass surfaces plus 2 inches on all sides of the glass (to account for a frame).

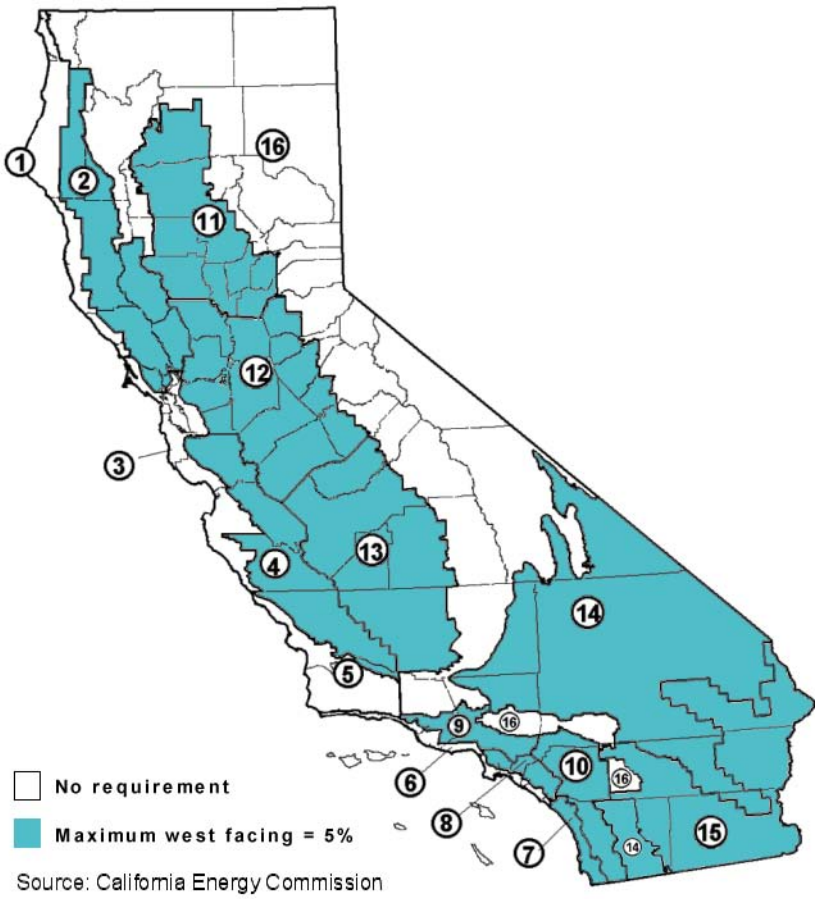

Figure 3-3 – Package C, D and E Prescriptive West-Facing Window Area Limits by Climate Zone

3.2.4 Compliance Options

While the prescriptive requirements and mandatory measures establish a minimum level of performance, the opportunities to exceed the requirements of the Standards are considerable. Some of these compliance options are discussed in this section. Those compliance options that are recognized for credit through the performance method are called compliance options. Most of the compliance options discussed in this section may be used only with the performance approach, but a few such as exterior shading devices and south facing overhangs may be used to comply with the prescriptive requirements.

Fenestration Area

With the 2008 update to the Standards, no credit is offered through the performance approach for reducing fenestration area below the maximum allowed 20 percent of the conditioned floor area (CFA).

Data show that the average window area in single family homes is about 17.3 percent of the CFA. In multifamily buildings, the average window area is about 14.5 percent of the conditioned floor area. While these are averages, the variations are considerable as shown in Figure 3-4. The reason that some houses have small fenestration areas and some have large areas, for the most part, has

little to do with considerations of energy efficiency. Multifamily buildings have less window area as a percentage of the floor area because the overall floor areas are typically larger, and more space is located in the middle of the building away from fenestration. They also have less exterior wall area per CFA. Larger window areas are desirable for many reasons including letting in natural light and allowing scenic views.

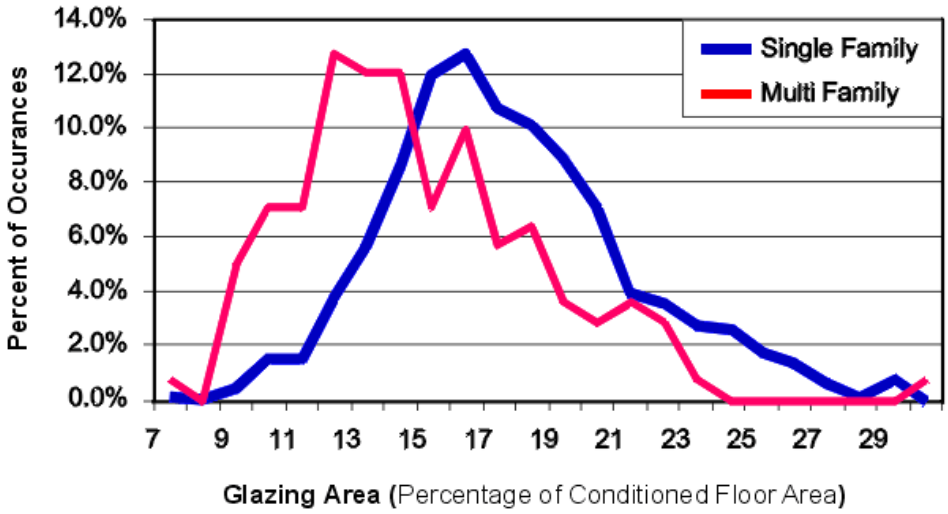

(Source: Residential New Construction Database)

Figure 3-4 – Glass Area in Single Family and Multifamily Residence

Based on data shown in Figure 3-4, and as a matter of policy, the Energy Commission made fenestration area less than or equal to 20 percent a neutral variable in the performance approach with the 2005 update and there is no change in this regard in the 2008 update. The Commission recognizes that area and orientation can have a big impact on energy use, but because these are so variable in buildings, the Commission does not want the energy efficiency of other building components to be eroded in buildings that have small windows because of non-energy reasons.

While there is no credit for window area less than 20 percent of CFA, there is a penalty for buildings that have a window area that exceeds 20 percent of CFA. Such buildings are permitted only with the performance approach, where the standard design has a window area equal to the proposed design (up to 20 percent of the conditioned floor area), and the glass area in the standard design is uniformly distributed among cardinal orientations. The proposed design, on the other hand, has the exact proposed glass area and orientation.

Orientation

Window and skylight orientation has a huge impact on both energy use and peak electric demand. Orientation is a compliance option that is recognized in the performance approach, since the standard design has windows uniformly distributed on the north, south, east, and west sides of the building.

With the 2005 update and continuing under the 2008 update, the currency used to compare whole building performance is TDV energy. With TDV energy, savings during peak periods are worth more than savings at non-peak times. Window and skylight orientation was always an important feature and one for which the Standards have always offered a credit. The change to TDV makes window orientation even more important in the context of compliance.

Improved Window Performance

With the 2008 update, the U-factor has been reduced to 0.40 in all climate zones in Package D. This means there is less credit available for installing high performance windows that could be traded off or be used to avoid other measures, such as duct sealing and verification. However, choosing high performance windows that perform better than the prescriptive requirements can still earn significant credit through the performance method. In air conditioning climates, choosing a window with an SHGC lower than 0.40 will reduce the cooling loads compared to the standard design.

The magnitude of the impact will vary by climate zone; in mild coastal climates the benefit to reducing window U-factor will be smaller than in cold mountain climates. Computer compliance programs can be a useful tool to compare the impact of different windows and can help the designer determine when an investment in better windows is worthwhile.

Several factors affect window performance. For windows with NFRC ratings, these performance features are accounted for in the U-factor and SHGC ratings:

- Frame materials, design, and configuration (including cross-sectional characteristics). Fenestration is usually framed in wood, aluminum, vinyl, or composites of these. Frame materials such as wood and vinyl are better insulators than metal. Some aluminum-framed units have thermal breaks that reduce the conductive heat transfer through the framing element as compared with similar units that have no such conductive thermal barriers.
- Number of panes of glazing, coatings, and fill gases. Double-glazing offers opportunities for improving performance beyond the dimension of the air space between panes. For example, special materials that reduce emissivity of the surfaces facing the air space, including low-e or other coatings, improve the thermal performance of fenestration products. Fill gases other than dry air such as, carbon dioxide, argon, or krypton – also improve thermal performance.
- Gap width (i.e., the distance between panes).
- Window type (i.e., casement versus double hung).
- Spacer material (i.e., the type of material separating multiple panes of glass).

Fixed Shading Devices

Shading of windows is also an important compliance option. Overhangs or sidefins that are attached to the building or shading from the building itself are

compliance options for which credit is offered through the performance approach. However, no credit is offered for shading from trees, adjacent buildings, or terrain.

Shading devices for which there is credit are those that are a part of the building design. For these, the designer and the builder have control over the measure and can assure that it will be constructed correctly and will perform properly. Non-credit devices are those that the designer has little or no control over, such as the height of a neighboring house or tree.

Windows that face south can be effectively shaded by overhangs positioned above the window. The ideal overhang is one that provides shade during the months when the building is likely to be in an air conditioning mode and allows direct solar gains in the heating months. This can be achieved because during the summer the sun is high as it passes over the south side, while in the winter it is low enabling solar radiation to pass beneath the overhang. Due to the potential effectiveness of south-facing overhangs, a prescriptive compliance option is offered. See the following section for details.

Shading is much more difficult on the east and west sides of the house (see Figure 3-5). When the sun strikes these façades it is fairly low in the sky, making overhangs ineffective. Vertical fins can be effective, but they degrade the quality of the view from the window and limit the natural light that can enter. In cooling climates, the best approach is to minimize windows that face east and west. Landscaping features can be considered to increase comfort but cannot be used for compliance credit.

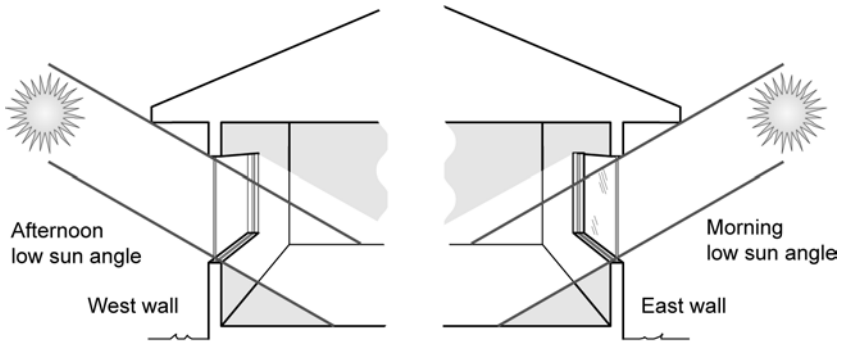

Figure 3-5 – Difficulty of Shading East- and West-Facing Windows

Prescriptive Compliance Using South-Facing Overhangs

A south-facing overhang may be used to meet the prescriptive SHGC criteria in the cooling climates. To qualify, the south overhang must be sized to completely shade the window at solar noon on August 21 and to allow the window to be substantially exposed to solar gains at solar noon on December 21. The minimum and maximum overhang depths that meet these criteria are illustrated in Figure 3-6. It is important to note that windows that do not face directly south will require larger overhangs for complete shading.

Credit is also offered for south facing overhangs with the performance method, but in this case the specific dimensions of the overhang are entered into a qualifying computer program and the benefit of the overhang is calculated for each hour of the day or sun angle. With the performance method, credit is not

limited to south facing overhangs, although they are still most effective on this orientation.

When a south facing overhang is used for compliance, it must be shown on the plans.

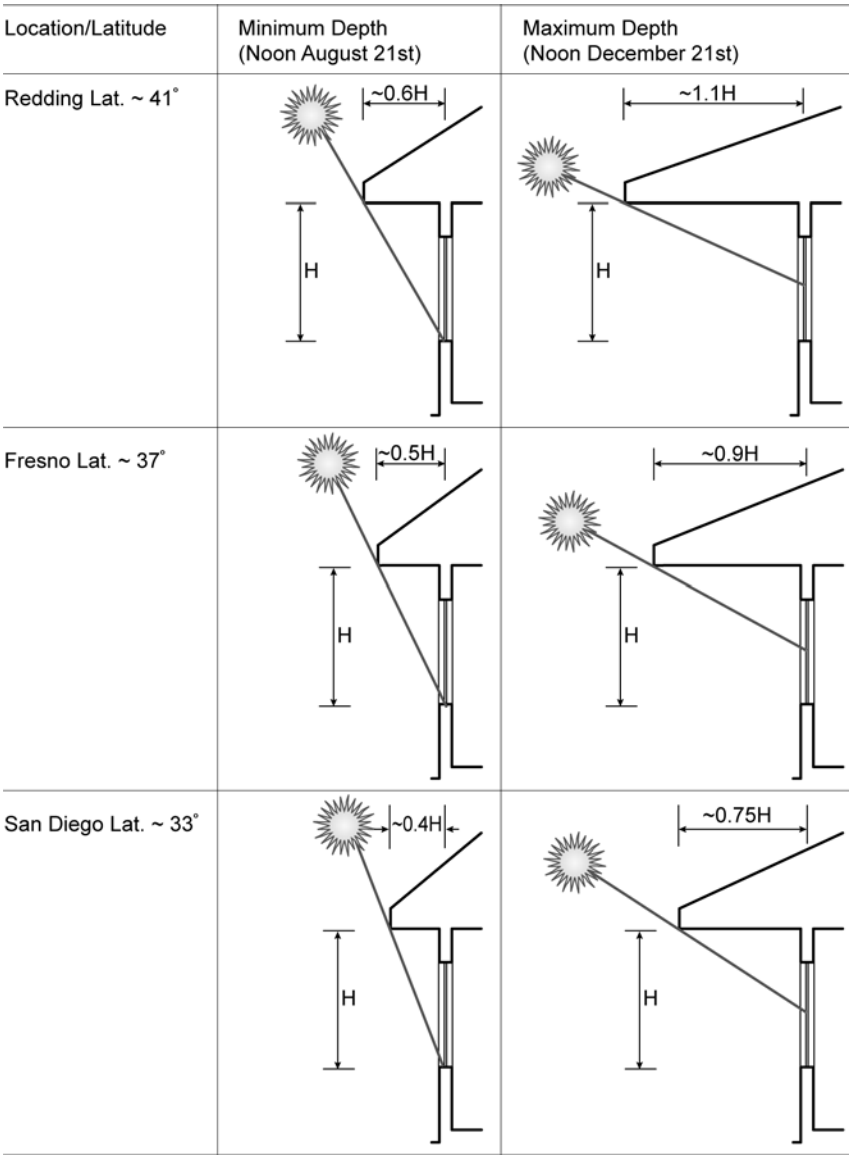

Figure 3-6 – South-Facing Overhang Dimensions for Prescriptive Compliance

Exterior Shading Devices

The prescriptive Standards require fenestration products with an SHGC of 0.40 or lower in climate zones 2, and 4 through 15. However, a fenestration product with an SHGC greater than 0.40 may be used with the prescriptive requirements if a qualifying exterior shading device is used. Qualifying exterior devices and their SHGC values are shown in Table 3-5. These include woven sunscreens as well as perforated metal sunscreens. As shown in the table, these devices transmit between 13 percent and 30 percent of the sun that strikes them.

When exterior shading devices are used, the SHGC requirements of prescriptive Package D may be met for all climate zones without calculations. Any exterior shading device other than bug screens listed in Table 3-5 will achieve compliance when used in combination with any allowed fenestration product.

For compliance credit, exterior shading devices must be permanently attached with fasteners that require additional tools to remove, as opposed to clips, hooks, latches, snaps, or ties. Exterior shading devices on windows or skylights that are prohibited by life-safety codes from being permanently attached for emergency egress reasons are exempt from this requirement.

Operable shading devices such as shutters, vertical roller shades or drop arm/combination awnings may be used as long as they are permanently attached to the building. Exterior shades on windows or skylights that are prohibited by life-safety codes from being permanently attached for emergency egress reasons are exempt from this requirement.

The SHGC of the window in combination with an exterior device is given by the following equation[1]:

$SHGC_{combined} = (0.2875 \times SHGC_{max} + 0.75) \times SHGC_{min}$

All windows are assumed to have an insect screen and this is the default condition against which other window/exterior shading device combinations are compared. The standard case is a window with an SHGC of 0.40 and an insect screen with an SHGC of 0.76 (see Table 3-5). For this default case, the SHGC of the window is the $SHGC_{min}$, and the SHGC of the exterior sunscreen is $SHGC_{max}$. Working through the math on WS-3R, $SHGC_{combined}$ is 0.3874. This means that any combination of window SHGC and exterior SHGC that results in an $SHGC_{combined}$ of 0.3874 or less complies with the prescriptive requirements.

All of the qualifying shading devices (other than the default) have an SHGC of 0.30 or lower. Combining this with the SHGC of any window will always result in an $SHGC_{combined}$ which is significantly lower than the prescriptive criterion of 0.40. This method of combining the SHGC of the window with the SHGC of the exterior shading device is also used with the whole building performance approach.

Compliance WS-3R is used to calculate the combined SHGC of windows and exterior shading devices. When exterior shades are required for compliance, they must be listed on the CF-1R form and be documented on the plans.

[1] The equation can be found in the 2008 Residential Compliance Manual and it is included in WS-3R in Appendix A.

Table 3-5 – Qualifying Exterior Shades and Solar Heat Gain Coefficients

Exterior Shading Device	SHGC
Standard Bug (insect) Screen (default for windows)	0.76
Exterior Sunscreens with Weave 53 x 16/inch	0.30
Louvered Sunscreens w/Louvers as wide as Window Openings	0.27
Low Sun Angle Louvered Sunscreen	0.13
Vertical Roller Shades or Drop Arm/Combination Awnings [2]	0.13
Roll -down Blinds or Slats	0.13
None (for skylights only)	1.00

Interior Shading

There is no credit for interior shading devices, although they can be effective in reducing solar gains and should be considered by homeowners. The Energy Commission considers interior shades in the category of home furnishings and not a feature of the house that is provided by the builder. Draperies, blinds, shades, and other interior devices are therefore not offered credit toward compliance. While there is no compliance credit, a default standard shade is still considered in performance calculations so that estimates of energy use are more realistic, and tradeoffs against other measures are more equitable. A default interior shade is not modeled, however, with skylights.

Bay Windows

Bay windows are a special compliance case. Bay windows may either have a unit NFRC rating (i.e., the rating covers both the window and all opaque areas of the bay window), an NFRC rating for the window only, or no NRFC rating. Non-rated bay windows may or may not have factory-installed insulation.

For bay windows that come with an NFRC rating for the entire unit, compliance is determined based on the rough opening area of the entire unit, applying the NFRC U-factor and SHGC. If the unit U-factor and SHGC do not meet the package requirements, the project must show compliance using the performance approach.

Bay windows with no rating for the entire unit (where there are multiple windows that make up the bay) and with factory-installed or field-installed insulation must comply accounting for the performance characteristics of each component separately. Opaque portions of bay windows including roofs and floors, must be insulated to meet the wall insulation requirements of Package D (§150(c)3). For prescriptive compliance, the opaque portion must either meet the minimum insulation requirements of the Package D for the applicable climate zone or be included in a weighted average U-factor calculation of an overall opaque assembly that does meet the Package D requirements. For the windows, the U-factor and SHGC values may be determined either from an NFRC rating or by using default values. If the window U-factor and SHGC meet the package requirements, the bay window complies prescriptively (if overall building fenestration area meets prescriptive compliance requirements). Bay window fenestration area is based on each individual window in the bay window. If the bay window does not meet package requirements, the project must show compliance under the performance approach. Bay window fenestration area and orientation in

the performance approach are based on each individual window in the bay window.

Natural Ventilation through Windows

Operable windows can be a source of “free” cooling. During periods when the outdoor temperature is lower than the desired indoor temperature and the indoor temperature is uncomfortably warm from solar gains through windows or from heat generated inside the house, windows may be opened for some or all of the cooling. Natural ventilation can reduce the need to run the air conditioner. Not only does natural ventilation save energy, but it can also provide better air quality inside the home.

In performance calculations, natural ventilation through windows is modeled. The default assumption is that the free ventilation area is 10 percent of the total window area and the height difference between the inlet and the outlet is 2 ft for single-story buildings and 8 ft for two- and three-story buildings. Credit is offered for design solutions that result in better natural ventilation. Credit is offered through the performance method for buildings with a larger percent of casement windows (larger free area than sliders) and for windows that are positioned so that the height difference between inlets and outlets is greater.

Noise is a major deterrent to opening windows for ventilation or cooling. When a house is designed, neighboring noise sources should be identified, and the design of the house should be modified to mitigate the effects. Exterior mass walls are often used to mitigate freeway or roadway noise. The location and design of windows should also be considered. Dusty conditions are also deterrents to the use of operable windows for ventilation.

Operable windows can be a source of ventilation air useful for improving indoor air quality by dilution of indoor air contaminants and moisture. When building envelopes are sealed to reduce infiltration, air exchange with the outside air is reduced which increases the need for a mechanical means of bringing in outside air.

Energy Commission sponsored research in California homes has shown that a significant number of home occupants do not regularly open their windows for ventilation. Starting with the 2008 update, it is mandatory to meet the requirements of ASHRAE Standard 62.2 which include mechanical ventilation and minimum openable window area requirements. This mandatory measure is discussed in greater detail in Section 3.5. Also see Section 4.6 for mechanical ventilation requirements.

3.2.5 Compliance and Enforcement

The compliance and enforcement process for fenestration products is basically one of making sure that the data from one set of documents matches data in another, and that with the specified fenestration performance, the building complies with the Standards.

Compliance Documentation

The person responsible for the compliance documentation must verify that data used in the calculations and entered on the compliance forms is reasonable. If data does not match the construction documents (plans) or if the plans are still under development, the compliance documentation author should make sure that the person preparing the plans understands what U-factor and SHGC are required for the fenestration products.

When performing compliance calculations and preparing documentation, the compliance author should consult manufacturers' published data (web site) found in the Certified Products Directory of fenestration products that contains the certified U-factor ratings. The directory is available at http://www.nfrc.org.

If the exact make and model number of the fenestration products to be installed are not known, there are a few options:

- Look up the U-factors for a number of products most likely to be installed and use the highest value of those products in the compliance calculations. Whichever fenestration product is then installed will comply with the U-factor used in the calculation. Follow a similar procedure for SHGC.
- Specify a particular product and state "or equivalent." In this approach, the builder or installer must understand that the U-factor and SHGC of the installed product must match, or be less than, the U-factor and SHGC specified in the compliance documentation.
- Use the appropriate default U-factor from Standards Table 116-A and default SHGC from Standards Table 116-B; however, this approach has disadvantages:

1. There is no guarantee that a selected product will have the same or better performance than the U-factor assigned to that generic type; and,
2. The compliance benefits of installing a high efficiency window will be lost.

Plan Checking

The plans examiner verifies that the fenestration product U-factors and SHGCs used on the compliance documents match those on the plans. The plans examiner can also verify that special shading devices such as exterior sunscreens are documented in the special features section of the CF-1R so this information will be available for the field inspector.

Construction

The fenestration product installer needs to understand the required U-factors and product SHGC values for the specific project, based on the compliance documentation such as the Certificate of Compliance (CF-1R). The installer should check the documentation to ensure that the products have the temporary label with information documenting that the window meets the compliance requirements.

NFRC labels include U-factor and SHGC data for residential (and nonresidential) windows. Verify that the residential data complies. The temporary label must remain on the product until the field inspector has inspected it.

The fenestration contractor must complete the Installation Certificate (CF-6R-ENV).

Field Inspection

The field inspector should verify that the windows and other fenestration products installed have performance characteristics that are documented on the temporary NFRC labels and that comply with the U-factor and SHGC used in the compliance documentation, including the CF-6R. All fenestration products must have a temporary label indicating U-factor, SHGC, and air infiltration rate (only field-fabricated products are exempt from labeling requirements).

The field inspector must compare the actual installed glass area with the glass area indicated on the CF-6R and with the maximum allowed glass areas indicated on the CF-1R. If more glass is installed, then the appropriate action depends on the compliance approach. If the prescriptive method was used, the glass area must not exceed the prescriptive limit (20 percent of floor area and in some climates a separate 5 percent west-facing limit). If the performance approach was used, then the compliance calculations must be redone to demonstrate compliance with the higher glass area.

3.3 Insulation

This section of the building envelope chapter addresses the requirements for insulating the opaque portion of the building shell. Components of the building shell include the walls, the floor, and the roof or ceiling. Windows and doors are addressed in Section 3.2, Fenestration.

3.3.1 Insulation General Mandatory Measures

§118

A number of mandatory measures apply to insulation in general, and those are covered in this section:

- Insulating materials must be certified and labeled by the manufacturer.
- Urea formaldehyde foam insulation may be installed only in exterior side walls and with a four-mil-thick (0.1 mm) plastic polyethylene vapor barrier or equivalent plastic sheeting vapor barrier installed between the urea formaldehyde foam insulation and the interior space. Insulating materials installed in exposed applications must have a flame spread of 25 or less and a smoke development rating of 450 or less.

Other mandatory measures apply to specific applications, and they are covered in the sections on ceiling/roof insulation, wall insulation, floor insulation, and slab insulation.

Certification of Insulating Materials

§118(a)

The California Standards for Insulating Materials, which became effective on January 1, 1982, ensure that insulation sold or installed in the state performs according to the stated R-value and meets minimum quality, health and safety standards.

All materials which claim insulation thermal conductive performance for compliance must be certified by Department of Consumer Affairs, Bureau of Home Furnishing and Thermal Insulation that the insulation conductive thermal performance complies with the California Code of Regulations, Title 24, Part 12, Chapters 12-13, Article 3, and "Standards for Insulating Material." Builders may not install the types of insulating materials indicated in §118(a) unless the manufacturer is licensed to sell in California and the insulation product is certified under one of the categories of insulating materials covered by the Bureau of Home Furnishings. Builders and enforcement agencies should use the Department of Consumer Affair's *Consumer Guide and Directory of Certified Insulation Material* to check compliance. Enforcement agencies receive a copy of the current directory. If an insulating product is not listed in the most recent edition of the directory, or to purchase a directory, contact the Department of Consumer Affairs Thermal Insulation Program at (916) 574-2041.

Urea Formaldehyde Foam Insulation

§118(b)

Urea formaldehyde is restricted by Section 1553 of CBC Title 24, Part 12. If such products are certified, this is verification that the restrictions of Section 1553 were met. The restrictions in §118 also apply, which allow the use of urea formaldehyde foam insulation only if:

- it is installed in exterior side walls; and
- a four-mil-thick (0.1 mm) plastic polyethylene vapor barrier or equivalent plastic sheeting vapor barrier is installed between the urea formaldehyde foam insulation and the interior space in all applications.

Flame Spread Ratings

§118(c)

California Standards for Insulating Materials require that all exposed installations of faced mineral fiber and mineral aggregate insulations must use fire retardant facings. Exposed installations are those where the insulation facings do not touch a ceiling, wall or floor surface, and faced batts on the underside of roofs with an air space between the ceiling and facing. These installations require insulation that has been tested and certified not to exceed a flame spread of 25 and a smoke development rating of 450.

Flame spread ratings and smoke development ratings are shown on the insulation or packaging material or may be obtained from the manufacturer.

3.3.2 Ceiling/Roof Insulation

Mandatory Measures

§118(d), §118(e), §150(a), §150(b)

These sections are also shown in Appendix B of this document.

The following mandatory measures apply specifically to roof and ceiling insulation:

1. When insulation is installed in the attics of existing buildings, at least R-38 must be installed in climate zones 1 and 16 and at least R-30 in the other climate zones. Insulation in roof/ceiling constructions must be placed in direct contact with the infiltration barrier. In most cases the attic is ventilated and the infiltration barrier is the drywall ceiling; in this case, the insulation must lie directly on top of the ceiling.
2. Wood framed ceiling/roof construction assemblies must have at least R-19 insulation or a maximum U-factor of 0.051 based on 16 inch (40 cm) on center wood framed rafter roofs, as determined from the Reference Joint Appendix JA4. The equivalent U-factor is from Table 4.2.2, cell entry A5, which is R-19 insulation in a wood framed rafter roof.
3. Some areas of the ceiling/roof can fail to meet the mandatory minimum U-factor as long as other areas exceed the requirement and the weighted average U-factor for the overall ceiling/roof is 0.051 or less.
4. In new construction, the R-19 mandatory minimum level of insulation applies for the performance compliance method. Otherwise, the R-19 minimum is superseded by the prescriptive requirements, which call for either R-30 or R-38, depending on climate zone.
5. Metal-framed and ceiling/roof constructions other than wood framed must have a U factor of 0.051 or less in order to comply with the mandatory measures. If the insulation is not penetrated by framing, such as rigid insulation lain over a structural deck, then the rigid insulation can actually have a rated R-value of less than R-19, and the mandatory measures can be satisfied.

Example 3-11

Question

A computer method analysis shows that a new house requires R-30 ceiling insulation to comply using the performance approach, but the minimum mandatory insulation level for ceiling insulation is only R-19. Which insulation level should be used?

Answer

R-30. The higher insulation level must be installed for the building to comply. In some cases such as this, minimum mandatory measures are superseded by stricter compliance measures when using the performance approach.

Example 3-12

Question

A small addition to an existing house appears to comply using only R-15 ceiling insulation with the performance approach. Does this insulation level comply with the Standards?

Answer

No. R-15 would not be sufficient because the required minimum ceiling insulation level established by the mandatory measures is R-19. However, R-15 could be used in limited areas, as follows:

1. 16-inches on center framing with attic with the weighted average U-factor for the entire ceiling/roof less than 0.049.

2. 24-inches on center framing with attic with the weighted average U-factor for the entire ceiling/roof less than 0.048.

3. 16-inches on center rafter without attic with the weighted average U-factor for the entire ceiling/roof less than 0.051.

4. 24-inches on center rafter without attic with the weighted average U-factor for the entire ceiling/roof less than 0.049.

Prescriptive Insulation Requirements

§151(f)1A

There are three prescriptive compliance approaches: Component Package C, Component Package D, and Component Package E. The following paragraphs discuss Component Package D, as it is the basis for the performance calculation methods. The prescriptive Package D compliance method requires R-38 insulation in climate zones 1 and 11 through 16. R-30 insulation is required in the other climate zones. In addition, a radiant barrier is required in climate zones 2, 4 and 8 through15, the climate zones where air conditioning is more common (see Figure 3-7).

There are two ways to meet the prescriptive insulation requirement. The first is to install R-30 or R-38 insulation in wood-framed construction. Wood-framed constructions include those in Tables 4.2.1 and 4.2.2 in Reference Joint Appendix JA4.

The other is to use a different roof assembly from Reference Joint Appendix JA4, including structural insulated panel systems (SIPS) and metal-framed roofs, as long as they have a U-factor less than that for a wood-framed attic (the choices from Table 4.2.1 in Reference Joint Appendix JA4). The U-factor criteria are 0.026 (Table 4.2.1, cell entry A9) in climate zones 1 and 11 through 16 (where R-38 is required) and 0.032 (Table 4.2.1, cell entry A8) in the other climate zones (where R-30 is required).

Note that R-30 or R-38 installed in a wood rafter construction (the choices from JA4 Table 4.2.2) are acceptable for complying with Component Package D and Package E, since they have the minimum required insulation, even though these have a U-factor higher than the U-factor criteria stated above.

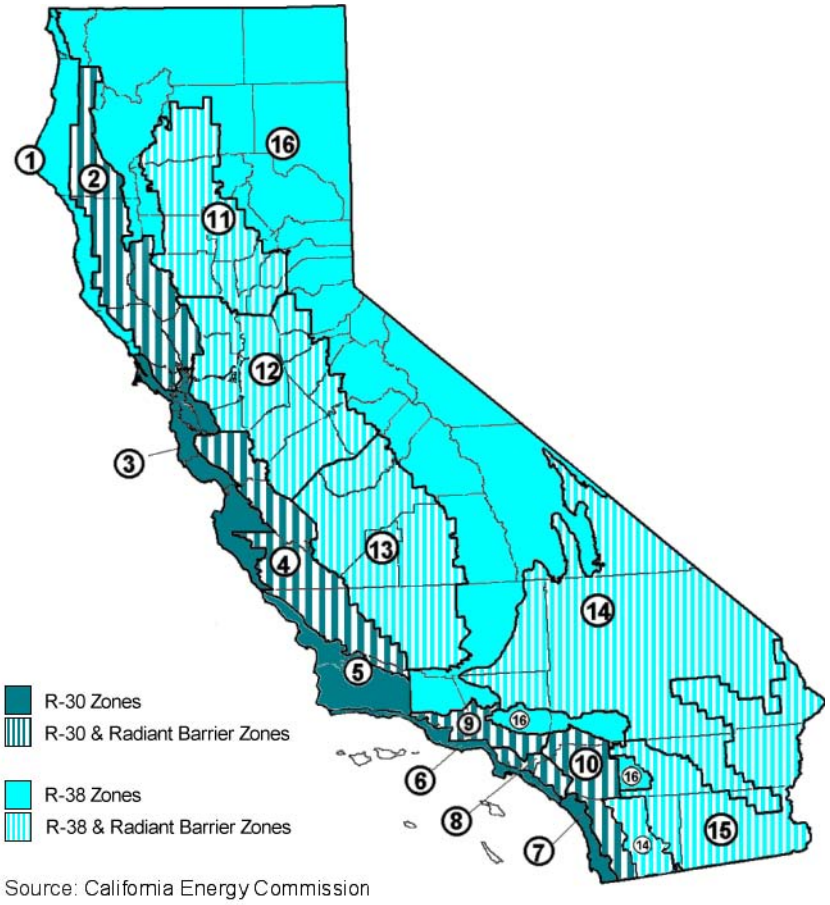

Figure 3-7 – Package D Prescriptive Ceiling/Roof Insulation Requirements

Construction Practice

Insulation Coverage

Ceiling insulation should extend far enough to the outside walls to cover the bottom chord of the truss. However, insulation should not block eave vents in attics because if the flow of air is blocked, moisture may build up in the attic and water vapor may condense on the underside of the roof. This can cause structural damage and reduce the insulation's effectiveness.

Insulation may be tapered near the eave, but it must be applied at a rate to cover the entire ceiling at the specified level. An elevated truss is not required but may be desirable. See Figure 3-8.

Loose Fill Insulation

§150(b) Loose Fill Insulation

Loose fill insulation must be blown in evenly, and insulation levels must be documented on the Installation Certificate (CF-6R). The insulation level can be verified by checking that the depth of insulation conforms to the manufacturer's coverage chart for achieving the required R-value. The insulation must also meet the manufacturer's specified minimum weight per ft² for the corresponding R-value. When installing loose fill insulation, the following guidelines should be followed:

1. For wood trusses that provide a flat ceiling and a sloped roof, the slope of the roof should be at about 4:12 or greater in order to provide adequate access for installing the insulation. Insulation thickness near the edge of the attic will be reduced with all standard trusses, but this is acceptable as long as the average thickness is adequate to meet the minimum insulation requirement.
2. If the ceiling is sloped (for instance, with scissor trusses), loose fill insulation can be used as long as the slope of the ceiling is no more than 4:12. If the ceiling slope is greater than 4:12, loose fill should be used only if the insulation manufacturer will certify the installation for the slope of the ceiling.
3. At the apex of the truss, a clearance of at least 30 in. should be provided to facilitate installation and inspection.

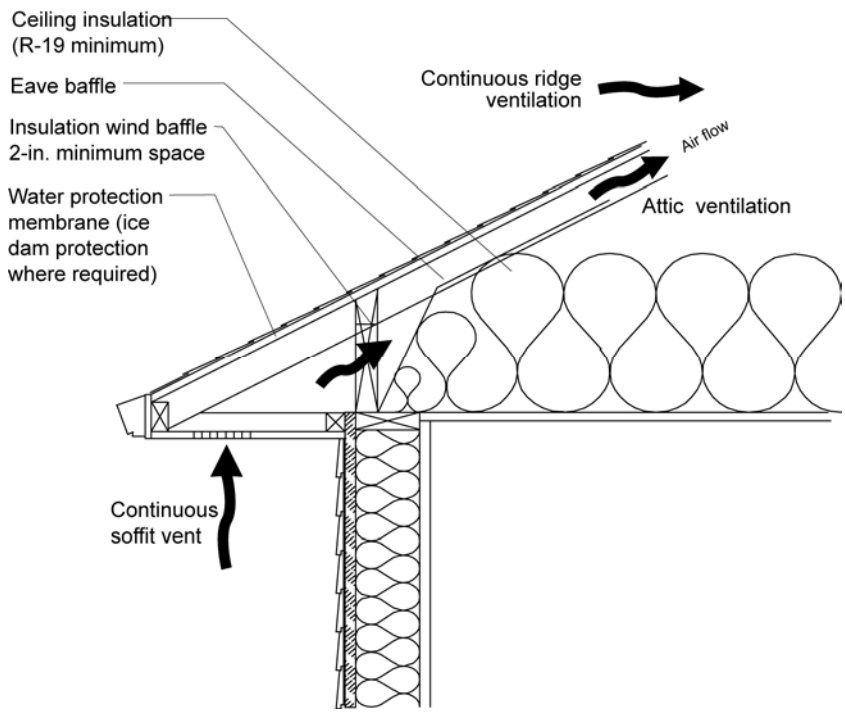

Figure 3-8 – Ceiling Insulation Construction Detail

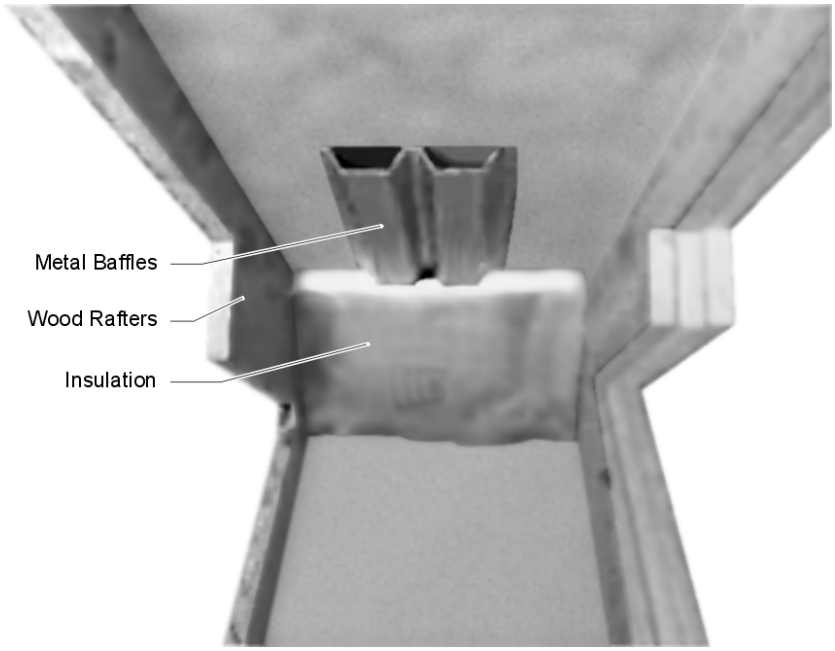

Source: California Energy Commission

Figure 3-9 – Baffles at the Eave in Attics

Ventilation

Where ceiling insulation is installed next to eave or soffit vents, a rigid baffle should be installed at the top plate to direct ventilation air up and over the ceiling insulation. See Figure 3-9.The baffle should extend beyond the height of the ceiling insulation and should have sufficient clearance between the baffle and roof deck at the top. There are a number of acceptable methods for maintaining ventilation air, including pre-formed baffles made of either paper or plastic. In some cases, plywood baffles are used.

The CBC requires a minimum vent area of 1 ft^2 for each 150 ft^2 of attic floor area. This ratio may be reduced to 1 to 300 if a ceiling vapor retarder is present or if high (for example, ridge or gable vents) and low (soffit vents) attic ventilation is used.

When part of the vent area is blocked by meshes or louvers, the net free area of the vent must be considered when meeting ventilation requirements.

Wood Rafter Constructions

Ventilating solid rafter spaces is more difficult than ventilating attics because each framing cavity requires its own vent openings. However, the requirement for ventilation is at the discretion of the local building official. It is common practice with cellulose insulation, for instance, to completely fill the cavity so that there is no ventilation at all. Also, if spray polyurethane foam is used, it is applied to the underside of the roof deck leaving no ventilation space. With batt insulation, it is possible to ventilate above the insulation using eave baffles, ridge vents, and careful installation.

Light Fixtures and Recessed Equipment

§150(k)5

Luminaires recessed in insulated ceilings can create thermal bridging through the insulation. Not only does this degrade the performance of the ceiling assembly, but it can also permit condensation on a cold surface of the luminaire if exposed to moist air, as in a bathroom.

For these reasons, luminaires recessed in insulated ceilings must meet three requirements:

1. They must be approved for zero clearance insulation cover (IC) by Underwriters Laboratories or other testing/rating laboratories recognized by the International Conference of Building Officials. This enables insulation to be packed in direct contact with the luminaire. (See Figure 3-10).
2. The luminaire must have a label certifying air tight (AT) construction. Air tight construction means that leakage through the luminaire will not exceed 2.0 cfm when exposed to a 75 Pa pressure difference, when tested in accordance with ASTM E283.
3. The luminaire must be sealed with a gasket or caulk between the housing and ceiling. For more information see Section 6.10 of this manual.

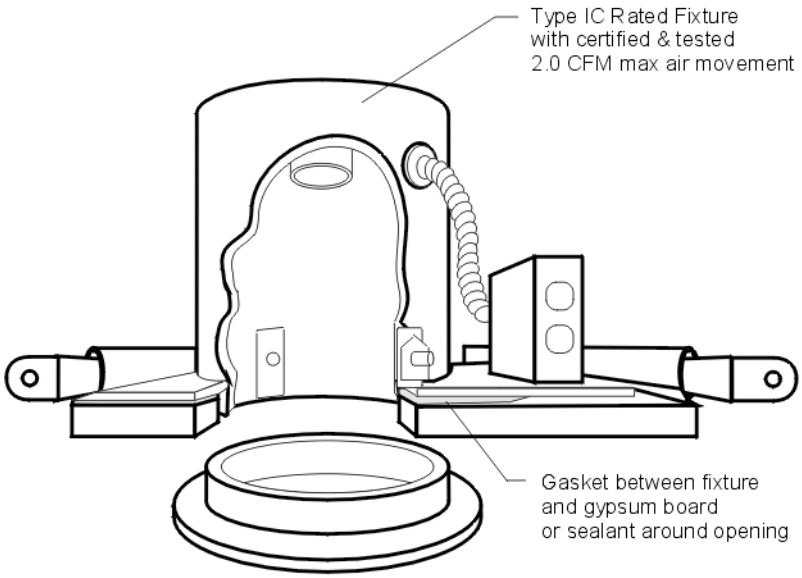

Figure 3-10 – IC-Rated Light Fixture

3.3.3 Radiant Barriers

Radiant Barrier Requirements

§151(f)2

The prescriptive requirements call for a radiant barrier in climate zones with significant cooling loads (2, 4, and 8 through 15). The radiant barrier is a reflective material that reduces radiant heat transfer caused by solar heat gain in the roof. Radiant barriers reduce the radiant gain to air distribution ducts and insulation located below the radiant barrier. In the performance approach, radiant barriers are modeled as separate adjustments to the heating U-factor and the cooling U-factor. The duct efficiency is also affected by the presence of a radiant barrier, with the performance approach.

Radiant Barrier Construction Practice

To qualify, a radiant barrier must have an emittance of 0.05 or less. The product must be tested according to ASTM C-1371-98 or ASTM E408-71(2002) and must be certified by the Department of Consumer Affairs[2]. Radiant barriers must also meet installation criteria as specified in Residential Appendices RA4.2.2 (Section RA4.2.2 is also reproduced in Appendix D of this document).

The most common way of meeting the radiant barrier requirement is to use roof sheathing that has a radiant barrier bonded to it in the factory. Oriented strand board (OSB) is the most common material available with a factory-applied radiant barrier. The sheathing is installed with the radiant barrier (shiny side) facing down toward the attic space. Alternatively, a radiant barrier material that meets the same ASTM test and moisture perforation requirements that apply to factory-laminated foil can be field-laminated. Field lamination must use a secure mechanical means of holding the foil to the bottom of the roof decking such as staples or nails that do not penetrate all the way through the roof deck material.

Other acceptable methods are to drape a foil type radiant barrier over the top of the top chords before the sheathing is installed, stapling the radiant barrier between the top chords after the sheathing is installed, and stapling the radiant barrier to the underside of the truss/rafters (top chord). For these installation methods, the foil must be installed with spacing requirements as described in Residential Appendices RA4.2.2. The minimum spacing requirements do not apply to this installation since it is considered a “laminated” system.

Installation of radiant barriers is somewhat more challenging in the case of closed rafter spaces when sheathing is installed that does not include a laminated foil. Foil may be field-laminated after the sheathing has been installed by “laminating”

[2] Certification of radiant barriers is required by CCR, Title 24, Part 12, Chapter 12-13, Standards for Insulating Material.

the foil as described above to the roof sheathing between framing members. This construction type is described in the Residential Appendices RA 4.2.2.

See Figure 3-11 for drawings of radiant barrier installation methods.

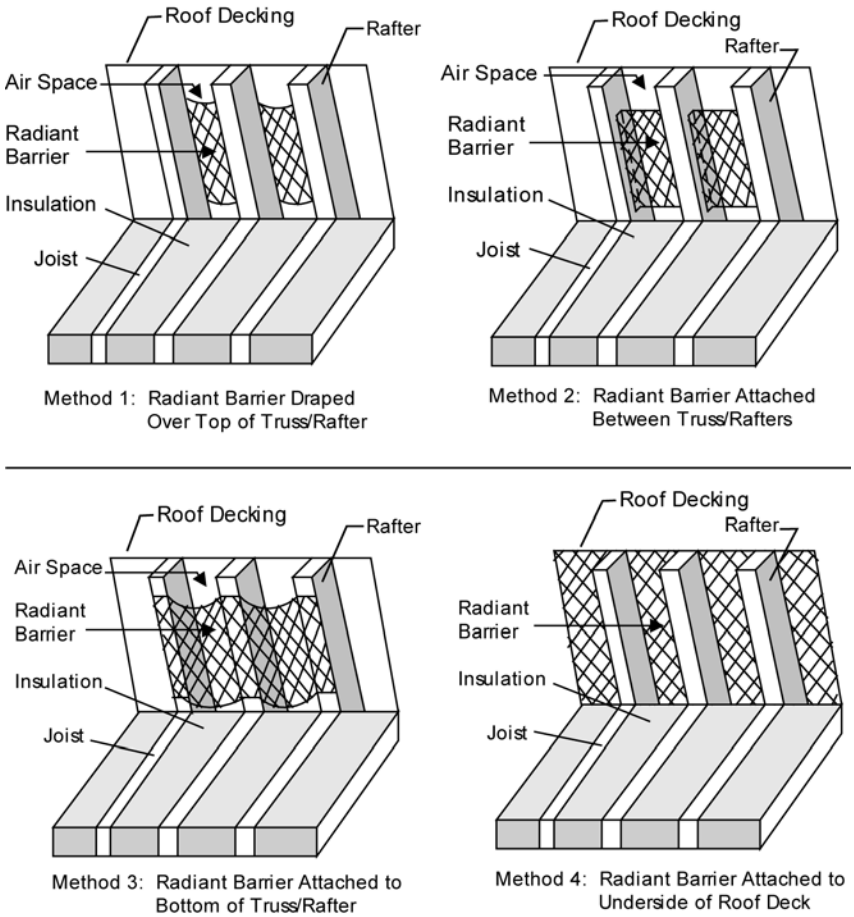

Figure 3-11 – Methods of Installation for Radiant Barriers

3.3.4 Wall Insulation

Mandatory Measures

§150(c)

The mandatory measures require that wood-framed walls above grade have at least R-13 insulation installed in the cavities between the framing members. However, the prescriptive measures for Component Package C and Package E require more insulation than the minimum requirements in all climate zones. Likewise, Component Package D requires more insulation than the minimum requirements in climate zones 1 and 11 through 16.

Wall constructions with insulation that is not penetrated by framing members, or with metal framing, comply with this mandatory measure if they have a U-factor lower than 0.102, which is the U-factor of a wood-framed wall with R-13

insulation. Cell entry A3 in Table 4.3.1 in Reference Joint Appendix JA4 is the basis for the U-factor criterion.

Insulation may be of greater insulating value in certain areas of the wall and of lesser insulating value in other areas of the wall provided that the area-weighted U- factor does not exceed 0.102 to show equivalence to an R-13 wall.

There are several cases where the mandatory measures for wall insulation do not apply or apply in a special way. These include the following:

- The mandatory measures apply to framed foundation walls of heated basements or heated crawl spaces that are located above grade, but not to the portion that is located below grade.
- Existing wood-framed walls of an addition that are already insulated with R-11 insulation need not comply with the mandatory R-13 wall insulation, but this exception applies only with the performance method. See Exception 1 to §152(a).
- Rim joists between the stories of a multi-story building are deemed to comply with these mandatory measures if they have R-13 insulation installed on the inside of the rim joist and carefully fitted between the joists.

Prescriptive Requirements – Framed Walls

§151(f)1A

The Package D and Package E prescriptive requirements (Standards Table 151-C and Table 151-D, also in Figure 3-12 below and Appendix B of this document) call for R-19 wall insulation in climate zones 11 through 13 and R-21 wall insulation in climate zones 1 and 14 through 16. R-13 insulation is required in other climate zones. The Package C requirements call for significantly more insulation (see Standards Table 151-B, also in Appendix B of this document).

Wood-framed walls may comply by specifying and installing the minimum R-value indicated. For metal-framed walls, or as an alternative to meeting the installed R-value in wood-framed walls, the designer may choose any wall construction from Reference Joint Appendix JA4 that has a U-factor equal to or less than the U-factor of a wood-framed wall with the required insulation.

For climates where R-13 is required, the maximum U-factor is 0.102 (Reference Joint Appendix JA4 Table 4.3.1, cell entry A3). For climates where R-19 is required, the maximum U-factor is 0.074 (JA4 Table 4.3.1, cell entry A5). In climates where R-21 is required, the maximum U-factor is 0.069 (JA4 Table 4.3.1, cell entry A6).

Metal-framed assemblies will require rigid insulation in order to meet the maximum U- factor criteria. U-factors for metal-framed walls are given in Reference Joint Appendix JA4 Table 4.3.4.

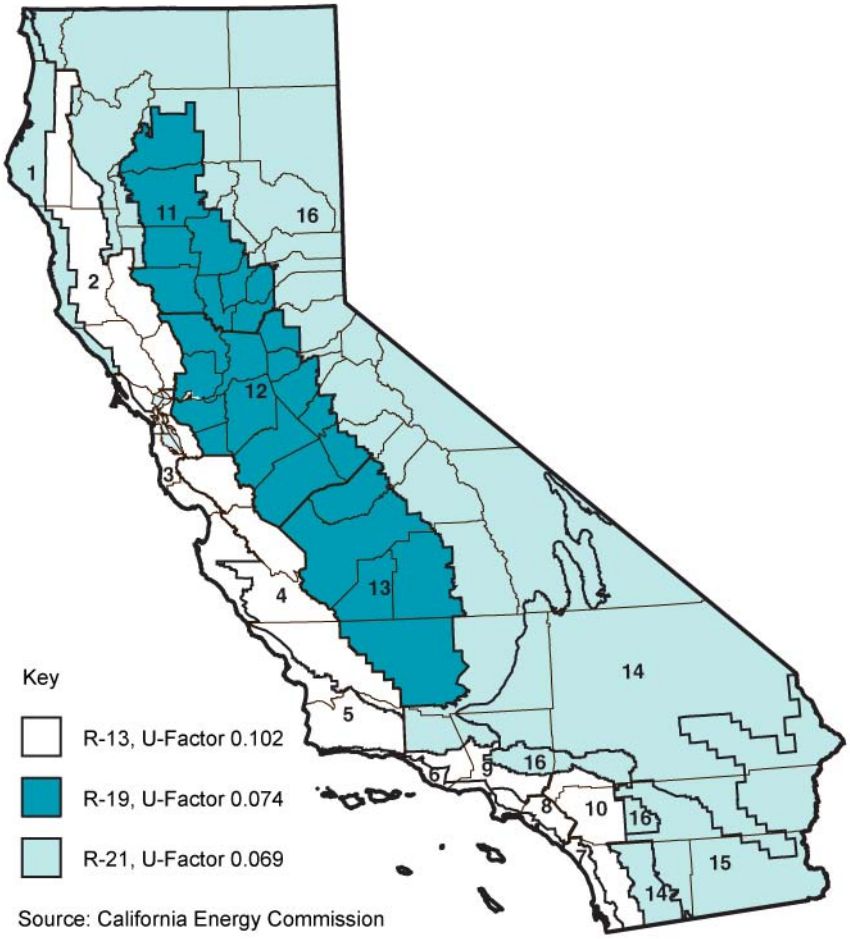

Figure 3-12 – Package D Wall Requirements by Climate Zone

Prescriptive Requirements – Mass Walls

§151(f)1A

§151(f)

These sections are also shown in Appendix B of this document.

The prescriptive requirements have separate criteria for heavy mass walls. While the Standards recognize both heavy mass and light mass walls, separate criteria are presented only for heavy mass walls and only for Package D and Package E. Heavy mass walls are those that weigh more than 40 lb/ft². Where the package indicates "NA" for a light mass wall the assembly must comply with 0.102 U-factor for climate zones that require R-13 for wood-framed walls, or 0.074 for where R-19 is required, or 0.069 where R-21 is required the. The "NA" applies to both heavy and light mass walls for Package C and light mass walls for Package D and Package E.

The R-value listed in Standards Table 151-C and Table 151-D (also in Appendix B of this document) for heavy mass walls is the minimum R-value for the entire wall assembly, including insulation and both interior and exterior air films. Heavy mass walls require R-2.44 in climates 2 through 10 and R-4.76 in the other climates. Tables 4.3.5 and 4.3.6 from Reference Joint Appendix JA4 have the

thermal properties of hollow unit masonry, solid core masonry, and concrete walls. Choices from these tables that have a heat capacity (HC) greater than or equal to 8.0 have a density greater than 40 lb/ft³ and qualify as heavy mass walls.[3]

Concrete Mass and Furred Walls

To determine the total R-value of a heavy mass wall, the U-factor from Reference Joint Appendix JA4 Table 4.3.5, 4.3.6 or other masonry tables is added to an insulation layer selected from Reference Joint Appendix JA4 Table 4.3.13. When the prescriptive requirements are used, the insulation must be installed integral with or on the exterior of the heavy mass wall. To accurately calculate the effective overall efficiency of the concrete wall and furring the Prescriptive CF-1R form can calculate the U-factor by using the Insulation Values for Opaque Surface table.

Figure 3-13 – Brick wall with furring details

[3] This assumes a specific heat of 0.2 of the mass.

The walls addressed in the Properties of Solid Unit Masonry and Solid Concrete Walls tables in the Reference Joint Appendix JA4 tables are rarely used in residential construction, but are common in some types of nonresidential construction. For residential construction, the Prescriptive CF-1R, CF-1R-ADD and CF-1R-ALTt can calculate complex wall systems to include furred strip walls.

A four step process is required to calculate the effective U-factor of a furred wall;

1. Select one of the concrete or masonry walls tables and select a U-factor; and
2. Select the appropriate Effective R-value for interior or Exterior Insulation Layers in Table 4.3.13; and
3. Fill out the CF-1R *Insulation Values for Opaque Surface* table columns. To achieve the Proposed Assembly U-factor or R-value column, first the *Mass and Furring Strips Construction* table needs to be filled out; and
4. Calculate the Final Assembly R-value and carry the value to back to the *Insulation Values for Opaque Surface* table. Compare the R-value, it must be equal to or greater than the mass standard R-value from Energy Standards Prescriptive Table 151-C or D.

Construction Practice

- Because it is difficult to inspect wall insulation behind tub/shower enclosures after the enclosures are installed, insulation of these wall sections should be inspected during the framing inspection.
- Batt insulation should fill the wall cavity evenly. If kraft or foil-faced insulation is used, it should be installed per manufacturer recommendations to minimize air leakage and avoid sagging of the insulation.
- Wall insulation should extend into the perimeter floor joist (rim joist) cavities along the same plane as the wall.
- If a vapor barrier is required, it must be installed on the conditioned space side of the framing.

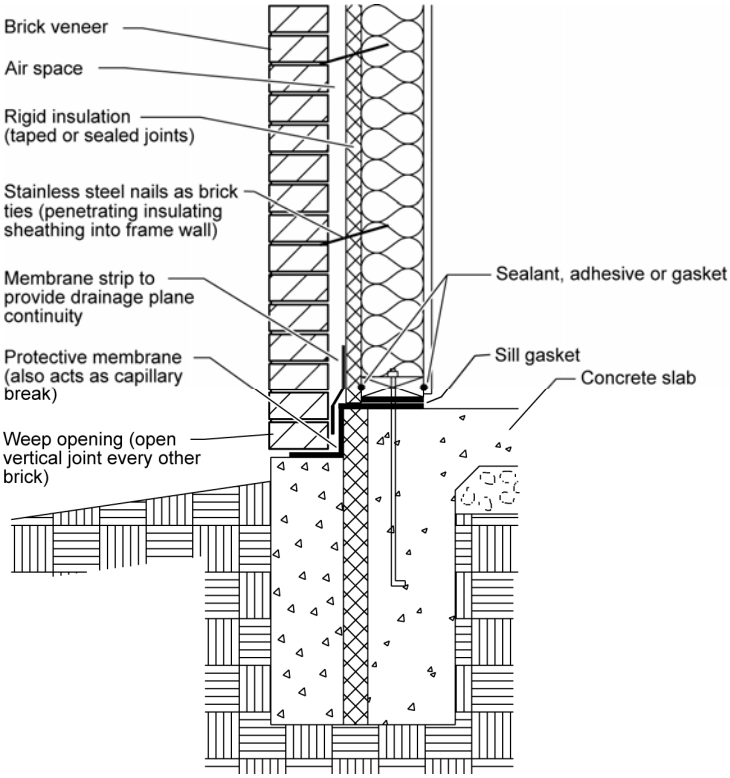

Figure 3-14 – Brick Wall Construction Details

Wood-Framed Wall with Brick Veneer, Mandatory Minimum R-13 Insulation

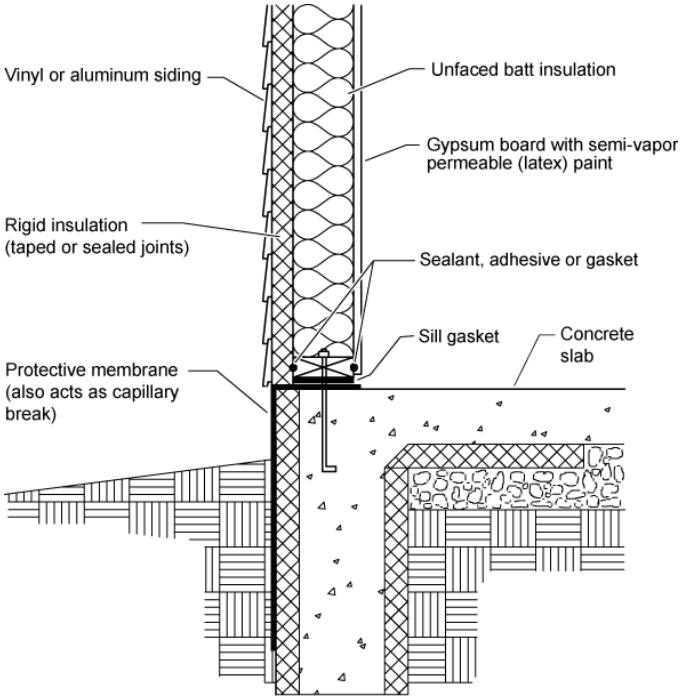

Figure 3-15 – Wall Construction Detail

Wood-Framed Wall with Vinyl or Aluminum Siding, Mandatory Minimum R-13 Insulation

Example 3-13

Question

Do new residential buildings or additions consisting of block walls (for example, converting a garage into living space) have to comply with the R-13 minimum wall insulation requirement? If not, what insulation R-value do they need?

Answer

No, the mandatory wall insulation requirement for R-13 applies to frame walls only. The amount of insulation needed, if any, will vary depending on the compliance approach selected. Performance compliance may not require any additional insulation if compliance can be achieved without insulation in that space. Prescriptive compliance may require some level of insulation, depending on the climate zone, package selected, and whether the walls are light (block) or heavy mass. Use Reference Joint Appendix JA4 to determine the R-value of the mass wall alone. If additional insulation is required, it must be integral with the wall or installed on the outside of the mass wall.

3.3.5 Floor Insulation

Mandatory Measures

§150(d)

Raised floors must meet minimum insulation requirements (see Figure 3-16). Wood-framed floors must have at least R-13 insulation installed between framing members, or the construction must have a U-factor of 0.064 or less. The equivalent U-factor is based on R-13 insulation in a wood-framed floor and no crawlspace or buffer zone beneath the floor. The corresponding floor construction from Reference Joint Appendix JA4 is Table 4.4.2, cell entry A3. If comparing to a crawlspace assembly, the equivalent U-factor is 0.046, which includes the effect of the crawlspace. The corresponding floor construction from Reference Joint Appendix JA4 is Table 4.4.1, cell entry A3.

Other types of raised floors, except for concrete raised floors, must also meet these maximum U-factors. In all cases, some areas of the floor can have a U-factor that fails the requirements as long as other areas have a U- factor that exceeds the requirements and the area-weighted average U-factor is less than described above.

Raised slab floors with radiant heat must meet special insulation requirements that are described in Chapter 4 of this manual.

Table 4.4.1 from Reference Joint Appendix JA4 has U-factors for floors located over a crawlspace, and JA4Table 4.4.2 has U-factors for floors located over ambient conditions. The difference is that R-6 insulation is added to approximate the buffering effect of the crawlspace. The additional R-6 is also included when modeling floors over crawlspaces with the performance method.

There is an exception to the mandatory measures for controlled ventilation crawlspaces. If all eligibility and installation criteria for a controlled ventilated crawlspace are met, raised floors above the controlled ventilation crawlspace need not meet the minimum insulation requirement. See the discussion below in the Compliance Options section.

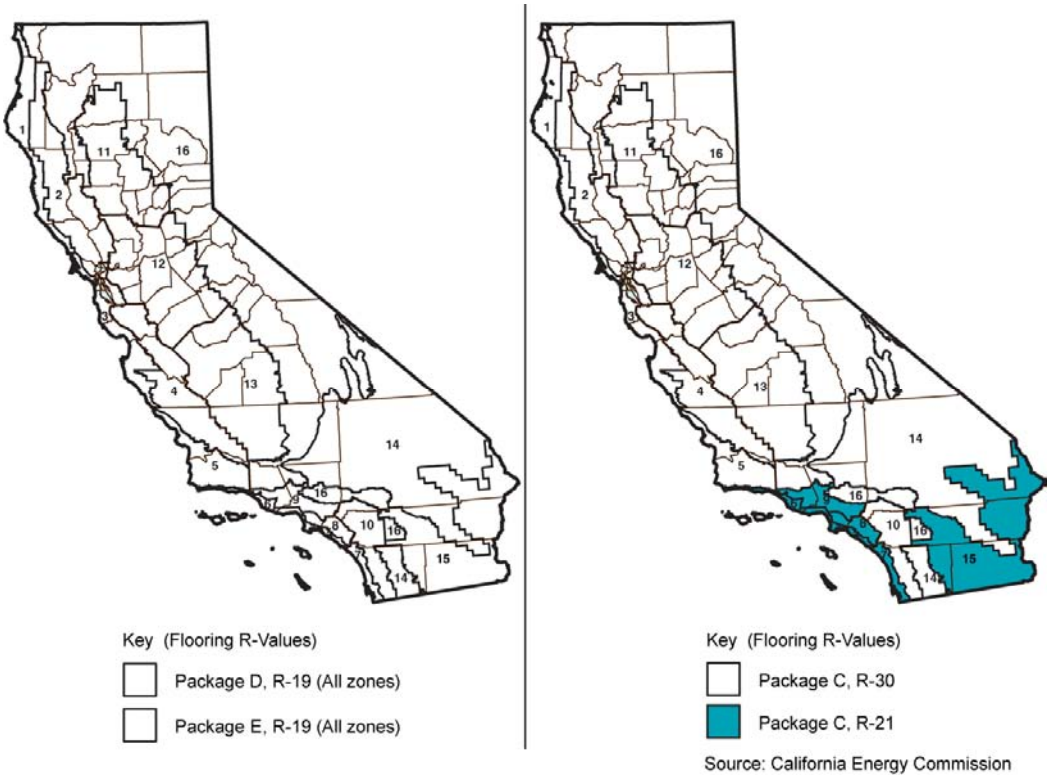

Figure 3-16 – Raised Floor Insulation Requirements by Climate Zone

Prescriptive Requirements

§151(f)1A

Package D and Package E prescriptive requirements call for R-19 insulation in raised floors in all climates. Package C requires R-21 in climate zones 6 through 9 and 15, and R-30 in the other climate zones.

The requirement may be satisfied by installing the specified amount of insulation in a wood-framed floor or by meeting an equivalent U-factor. Those U-factors are listed in Table 3-6 along with the corresponding constructions from Reference Joint Appendix JA4. Package D and Package E has separate requirements for concrete raised floors. This type of construction is typical for the floor that separates the first habitable floor of multifamily buildings from a parking garage. For this class of construction, R-4 insulation is required for climate zones 12 and 15, and R-8 is required for climate zones 1, 2, 11, 13, 14, and 16. No insulation is required in other climate zones. Package C indicates “NA” for concrete raised floor insulation, which means no insulation is required.

Table 3-6 – Raised Floor Constructions Used as Basis for Equivalent U-factor Compliance

Insulation R-value	Crawlspace?	Reference Joint Appendix JA4 Construction and Table Cell Entry	Equivalent U-factor
R-13	No	4.4.2 A3	0.064
R-13	Yes	4.4.1 A3	0.046
R-19	No	4.4.2 A4	0.048
R-19	Yes	4.4.1 A4	0.037
R-22	No	4.4.2 A5	0.044
R-22	Yes	4.4.1 A5	0.034
R-30	No	4.4.2 A7	0.034
R-30	Yes	4.4.1 A7	0.028

Construction Practice

Floor insulation should be installed in direct contact with the subfloor so that there is no air space between the insulation and the floor. Support is needed to prevent the insulation from falling, sagging, or deteriorating.

Options for support include netting stapled to the underside of floor joists, insulation hangers running perpendicular to the joists, or other suitable means. Insulation hangers should be spaced at 18 in. or less prior to rolling out the insulation. Insulation hangers are heavy wires up to 48 in. long with pointed ends, which provide positive wood penetration. Netting or mesh should be nailed or stapled to the underside of the joists. Floor insulation should not cover foundation vents.

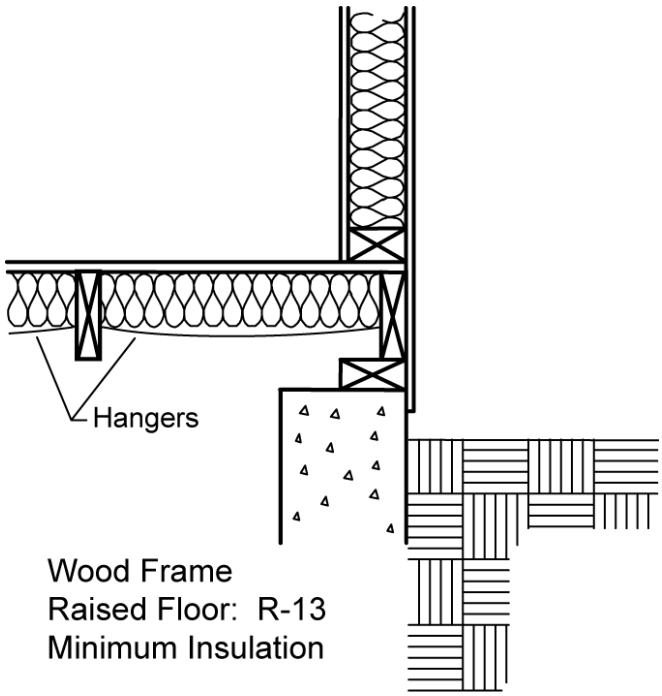

Figure 3-17 – Raised Floor Insulation

3.3.6 Slab Insulation

Mandatory Measures

§150(l)

§118(g)

The mandatory measures do not require slab insulation, but when the prescriptive requirements call for it, the mandatory measures require that the insulation material must be suitable for the application, with a water absorption rate no greater than 0.3 percent when tested in accordance with ASTM C272 Test Method A, 24-Hour-Immersion, and a vapor permeance no greater than 2.0 perm/in. when tested in accordance with ASTM E96. An example of an insulating material that meets these specifications is smooth-skin extruded polystyrene.

The insulation must also be protected from physical and UV degradation by either installing a water-resistant protection board, extending sheet metal flashing below grade, choosing an insulation product that has a hard durable surface on one side, or by other suitable means.

Slab edge insulation is mandatory with heated slabs, as required by §118(g) of the Standards. See Chapter 6 of this manual for details.

Prescriptive Requirements

§151(f)1

Prescriptive Package D and Package E require slab insulation only in climate zone 16. In this case, a minimum of R-7 must be installed. Package C requires R-

7 slab insulation in all climates. The insulation must be installed to a minimum depth of 16 in. or to the bottom of the footing, whichever is less. The depth is measured from the top of the insulation, as near the top-of-slab as practical, to the bottom edge of the insulation (see Figure 3-18).

Perimeter insulation is not required along the slab edge between conditioned space and the concrete slab of an attached unconditioned enclosed space such as a garage, covered porch, or covered patio. Neither would it be practical or necessary to insulate concrete steps attached to the outside slab edge.

In situations where the slab is below grade and slab edge insulation is being applied to a basement or retaining wall, the top of the slab edge insulation should be placed as near to ground level as possible and extended down at least 16 inches. In situations where the slab is above grade and slab edge insulation is being applied, the top of the slab edge insulation should be placed at the top of the slab.

Example 3-14

Question

What are the slab edge insulation requirements for a hydronic-heating system with the hot water pipes in the slab?

Answer

The requirements for insulation of heated slabs can be found in §118(g) of the Standards and are described in Chapter 4 of this manual. The material and installation specifications are as follows:

- Insulation values as shown in Table 118-A of the Standards
- Protection from physical damage and ultra-violet light deterioration
- Water absorption rate no greater than 0.3% (ASTM-C-272)
- Water vapor permeance no greater than 2.0 per/inch (ASTM-E-96)

Construction Practice

Slab-edge insulation should be protected from physical damage and ultraviolet light exposure because deterioration from moisture, pest infestation, ultraviolet light and other factors can significantly reduce the effectiveness of the insulation.

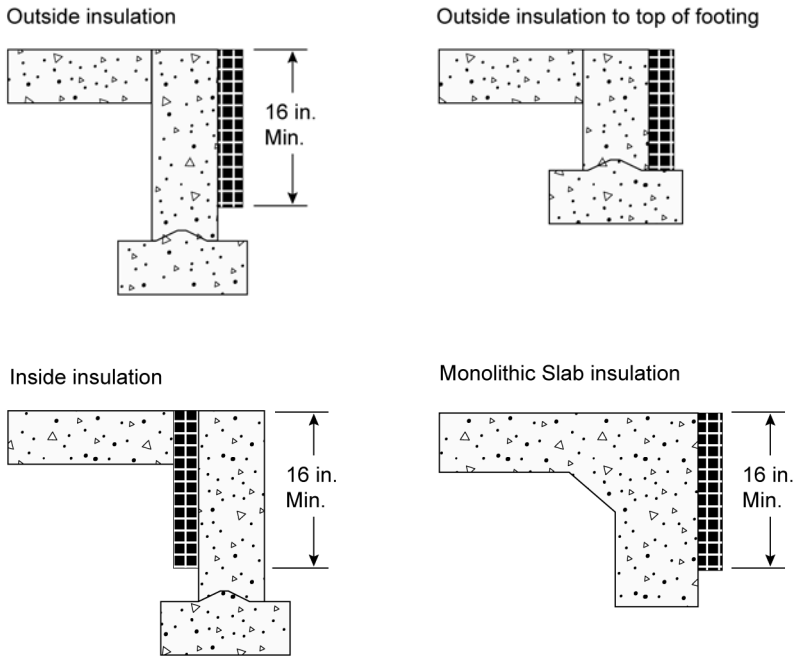

Figure 3-18 – Allowed Slab Edge Insulation Placement

When slab-edge insulation is required by the prescriptive or performance requirements, then minimum depth is 16 in. or to the top of the footing, whichever is less.

3.3.7 Compliance Options

Quality Insulation Installation

Energy Commission videos
Reference Residential Appendix RA3.5

Typical residential insulation installations have flaws that degrade thermal performance. Three problems are generally responsible for the degradation:

1. Insulation is not in contact with the air barrier creating live air spaces that short-cut the insulation.
2. The insulation has voids or gaps, resulting in portions of the construction assembly that are not insulated.
3. The insulation is compressed, creating a gap near the air barrier and/or reducing the thickness of the insulation.

Since these problems are so widespread, the Energy Commission assumes in its approved computer programs, prescriptive standards, and life-cycle cost analyses that insulation does not perform as effectively as standard U-factor calculations would indicate. Since the standard calculations are based on good quality installation, wall heat loss and heat gain are assumed to be 13.3 percent higher than a quality installation due to common installation and construction flaws. For

ceiling/roof assemblies (including attics), the flaws are assumed to add 0.01 to the heating U-factor and 0.003 to the cooling U-factor relative to assemblies with verified quality insulation installations.[4]

The calculated U-factors that are presented in Reference Joint Appendix JA4 do not include these adjustments; rather they are automatically added by Energy Commission approved software.

Although Reference Residential Appendix RA 3.5 is quite thorough and needs to be understood in its entirety, two matters warrant additional elaboration in this manual.

1. It is important to maintain contact between the wall and ceiling insulation and the interior sheetrock that forms the air barrier to prevent convection from reducing the effectiveness of the insulation. This is an issue particularly for knee walls, skylight wells, and underfloor insulation where there is traditionally no drywall or other backing material to help maintain contact between the interior surface material and the insulation. It is also a common problem when batt ceiling insulation is installed before the ceiling drywall. And it is a problem when hard covers or draft stops are not installed over drop ceilings, lighting soffits, interior and exterior wall cavities, and other interstitial spaces to form an air barrier with which the insulation will maintain contact.
2. When different areas of the ceiling are intended to have different insulation levels, compliance documentation must separately report each area and its insulation characteristics in the compliance program. For example, if an attic furnace platform is installed with less insulation under the platform than in the remainder of the attic, then the compliance forms must have separate input for the insulation characteristics for the area under the platform and remainder of the ceiling insulation. Within each of the areas that are separately listed on compliance documentation, the insulation thickness and density must be uniform.

Examples of poorly installed insulation are shown in Figure 3-19.

With the performance method, designers and contractors can get credit for correctly installing insulation to eliminate or reduce the problems described above. Reference Residential Appendix RA3.5 contains a procedure for verifying the quality of insulation installation in low-rise residential buildings. Credit for installation of medium density closed cell spray polyurethane foam in residential building is given when the required installation procedures described in Reference Joint Appendix JA7 are followed. Through the performance approach, a compliance credit is offered when this procedure is followed by the insulation installer and verified by a qualified HERS rater.

The procedure and credit apply to wood-framed construction with wall stud cavities, ceilings, and roof assemblies insulated with mineral fiber or cellulose insulation in low-rise residential buildings. The procedure does not allow any

[4] See the 2008 Reference Residential Appendix RA3.5

credits for floor assemblies. The ceiling/roof constructions are presented in Reference Joint Appendix JA4, Tables 4.2.1 and 4.2.2, and the wall assemblies presented in Table 4.3.1.

The credit does not apply to other construction assemblies listed in Reference Joint Appendix JA4, including metal-framed walls and ceiling/roof assemblies and SIPS. For non-wood framed assemblies, approved computer programs do not modify the thermal performance of the building envelope component as described above.

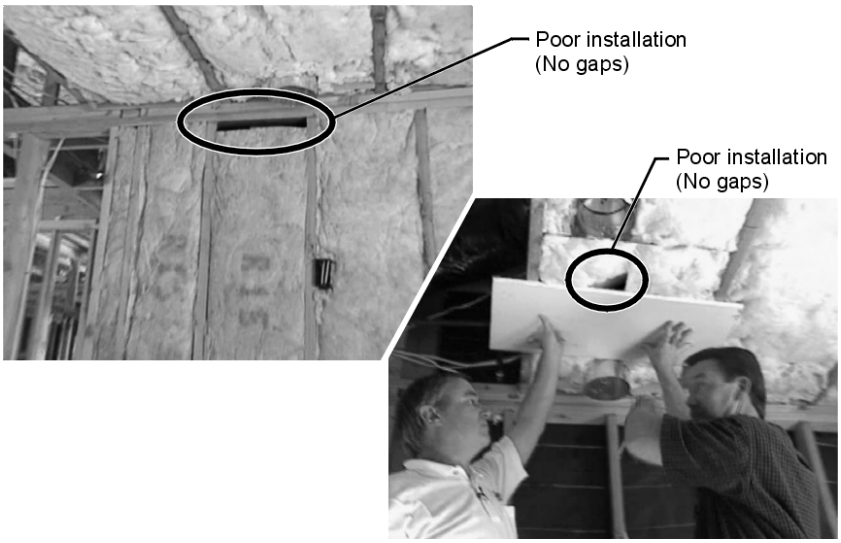

Source: California Energy Commission

Figure 3-19 – Examples of Poor Quality Insulation Installation

Sprayed Wall Insulation

See Energy Commission videos.

Sprayed wall insulation can be an effective way to deal with the irregularities of wall and ceiling cavities, especially the spaces around pipes, electric cables, junction boxes, and other equipment that is embedded in cavities. There are several types of sprayed insulation, including cellulose (see Figure 3-20), fiberglass and spray polyurethane foam (SPF). Cellulose is basically paper that has been treated for flame- and insect-resistance. The product is similar to the loose fill cellulose that is commonly used in attic insulation retrofits, but for walls it is mixed with a water- and starch-based binder. The binder causes the insulation to stick to the surfaces of the wall cavity. Excess insulation that extends past the wall cavity is scraped off with a special tool and recycled into the hopper with the fresh insulation.

Loose fill fiberglass insulation

Loose fill fiberglass insulation is made up of small glass fibers. The product is similar to loose fill fiberglass that is commonly used in attics, but for walls it can be installed behind a netting fabric or mixed with water based adhesive. The adhesive causes the insulation to adhere to surfaces of the wall cavity. Excess insulation that extends past the wall cavity is scraped off and recycled. Loose fill fiberglass insulation shall use batt insulation assembly U–factors listed in

Reference Joint Appendix JA4. See Reference Residential Appendix RA3.5.5.2 for more Quality Insulation Installation (QII) requirements.

Spray Polyurethane Foam (SPF)

Spray polyurethane foam insulation is a foamed plastic formed by the combination of chemicals and a blowing agent applied using a spray gun. SPF insulation is spray applied to fully adhere to the joist and other framing faces to form a complete air seal within the construction cavities.

There are two types of SPF insulation; medium density, closed cell and low density, open cell insulation. They have different insulating properties, and compliance requirements as described below.

Medium density, closed cell SPF has been assigned an R-value of 5.8 per inch for compliance purposes and a nominal density of 2.0 +/- 0.5 pounds per cubic foot.

Medium density SPF must be applied following the procedures detailed in Reference Joint Appendix JA7. The insulation shall be installed at the average thickness required to achieve the specified R-value of the assembly documented on the CF-1R. The installation thickness applied to meet these R-values levels shall be documented on the Installation Certificate (CF-6R). The nominal thickness of the SPF insulation shall be such that (1) the average thickness shall be equal to or greater than that required to meet the design R-value of the assembly, and (2) the minimum tested thickness shall be no more than ½ inch less than the required thickness for the R-value.

Medium density is not required to fill the cavity. The insulation thickness shall be verified by using probes capable of penetrating the full thickness of the insulation with measurements marked by eighth inch increments Measurements shall be accurate to within ± 1/8 inch. The probes shall be used by HERS Raters to verify proper thickness of insulation has been applied.

A compliance credit for quality insulation installation is available when the required procedures detailed in Reference Joint Appendix JA7 are followed and verified by a qualified HERS rater. The credit only applies to low rise-residential buildings, the procedure and credit applies to wood or metal framed wall, ceiling, and/or roof assemblies insulated with SPF insulation. Also as mentioned above in Section 3.3.2 of this document or see Reference Residential Appendix RA3.5 for more discussion of Quality Insulation Installation (QII).

Low density SPF open cell insulation has an R-value of 3.6 per inch and a density of 0.5 lbs/ft^2. Low density, open cell SPF insulation is sprayed into the cavity then expands to fill the cavity. Excess insulation is removed with a special tool. Low density SPF insulation shall use spray insulation assembly U-factors listed in Reference Joint Appendix JA4. No quality insulation installation compliance credit is allowed for low density SPF insulation.

U-factors for sprayed insulation are provided in *Reference Joint Appendix JA4* (Tables 4.2.2, 4.2.5, 4.3.1, 4.3.3, and 4.3.4) for both framed walls (wood or metal) as well as for rafter roofs (wood or metal). The thermal performance of cellulose and foamed plastic is similar, and one set of data is provided for both. The data in Reference Joint Appendix J4 assumes that the cavity of rafter roof constructions can be completely filled (no ventilation). Check with the building official in your area to verify that this method of insulation is acceptable.

Source: California Energy Commission

Figure 3-20 – Cellulose Insulated Wall

Metal Framing

A change from wood framing to metal framing can significantly affect compliance. Metal and wood framing are not interchangeable.

Metal-framed wall construction generally requires a continuous layer of rigid insulation to meet the mandatory minimum wall insulation levels and/or the prescriptive requirements. In Reference Joint Appendix JA4, Tables 4.2.4 and 4.2.5 have U-factors for metal-framed ceiling/roof constructions. Table 4.3.4 has U-factors for metal-framed walls. Tables 4.4.4 and 4.4.5 have U-factors for metal-framed floors.

To comply prescriptively, a non-wood framed assembly, including a metal framed assembly, must have an assembly U-factor that is equal or less than the U-factor of the wood framed assembly for that climate zone; compliance credit is available through the performance path for metal framed assemblies that exceed the prescriptive requirements of the equivalent wood framed assemblies.

Log Homes Compliance Option

Log homes are an alternative construction type used in some parts of the state. Log home companies promote the aesthetic qualities of solid wood construction and can "package" the logs and deliver them directly to a building site. Some companies provide log wall, roof, and floor systems with special insulating "channels" or other techniques to minimize the effect of air infiltration between log members and to increase the thermal benefit of the logs.

Log walls do not have framing members like conventional wood stud walls. Therefore, the mandatory requirement for a minimum of R-13 wall insulation does not apply.

Otherwise, in prescriptive compliance log walls must meet the same thermal requirements as other construction types. For performance compliance, consult the compliance software vendor's documentation for any unique modeling requirements for mass walls using values from Reference Appendices. In prescriptive compliance, the walls will qualify as either light mass or heavy mass walls depending on the thickness – remember a heat capacity (HC) of 8.0 Btu/°F-ft² is equivalent to a heavy mass wall (40 lb/ft³). The prescriptive requirements for heavy mass walls are less stringent than the criteria for wood-framed walls. Reduced insulation is allowed because the effects of the thermal mass (interior and exterior) can compensate for less insulation.

The thermal performance of log walls is shown in Reference Joint Appendix JA4, Table 4.3.11. The U-factor ranges from 0.133 for a 6-in. wall to 0.053 for a 16-in. wall. The U-factor of an 8-in. wall is 0.102, which complies with the R-13 prescriptive requirements. U-factors for other log wall constructions (not shown in Reference Joint Appendix JA4) would have to be approved by the Energy Commission through the exceptional methods process.

Log walls have a heat capacity that is in excess of conventional construction. Reference Joint Appendix JA4 [Table 4.3.11 – Thermal Properties of Log Home Walls] shows that a 6-in. wall has an HC of 4.04 which increases to 10.77 for a 16-in. wall. The thermal mass effects of log home construction can be accounted for within the performance approach.

Air infiltration between log walls can be considerably different among manufacturers depending upon the construction technique used. For purposes of compliance, infiltration is always assumed to be equivalent to a wood-frame building. However, the builder should consider using a blower door test to find and seal leaks through the exterior walls.

Straw Bale Construction

In 1995, the California Legislature passed AB1314, a bill that authorizes all California jurisdictions to adopt building codes for houses with walls constructed of straw bales. The bill provided guidelines for moisture content, bale density, seismic bracing, weather protection, and other structural requirements.

Several years ago, the Energy Commission, in conjunction with research and testing facilities, determined the thermal properties needed for straw bale walls to comply with the Standards. The thermal mass benefit of straw bale construction can be credited only through the use of the computer performance compliance approach by modeling straw bale construction using the heat capacity characteristics of the straw bales given below.

Straw bales that are 23 in. by 16 in. are assumed to have a thermal resistance of R-30, whether stacked so the walls are 23 in. wide or 16 in. wide. Performance data on other sizes of bales is not available. The minimum density of load bearing walls is 7.0 lb/ft^3, and this value or the actual density may be used for modeling straw bale walls in the performance approach. Specific heat is set to 0.32 Btu/lb-°F. Volumetric heat capacity (used in some computer programs) is calculated as density times specific heat. At a density of 7 lb/ft³, for example, the volumetric heat capacity is 2.24 Btu/ft³-°F.

The minimum dimension of the straw bales when placed in the walls must be 22 in. by 16 in. There are no restrictions on how the bales are stacked. Due to the

higher resistance to heat flow across the grain of the straw, a bale laid on edge with a nominal 16-in. horizontal thickness has the same R-Value (R-30) as a bale laid flat.

For performance compliance, consult the compliance program's documentation for any unique modeling requirements for mass walls using values from Reference Appendices RA5.

Structural Insulated Panels (SIPS)

Structural Insulated Panels (SIPS) are an advanced method of constructing walls, roofs and floors. SIPS consist of rigid insulation (usually expanded polystyrene) sandwiched between two sheets of OSB or plywood. Little or no structural framing penetrates the insulation layer. Panels are typically manufactured at a factory and shipped to the job site in assemblies that can be as large as 8 ft by 20 ft.

In the field, the SIPS panels are joined in one of two ways (see Figure 3-21) and the choice affects thermal performance. The first way is to use wood spacers at the joints. These spacers allow thermal bridging but they are spaced no closer than about 48 in. The second way of joining SIPS panes is to use an OSB spline. With this technique, the insulation is notched or routed just in back of the OSB panels on each side. An OSB strip is then inserted into the pocket on each side of the panel and the assembly is fastened together with wood screws.

Reference Joint Appendix JA4, Table 4.3.2 has U-factors for SIPS wall assemblies. Table 4.2.3 has U-factors for roof/ceiling assemblies and Table 4.4.3 has U-factors for SIPS floor constructions. U-factors used for compliance must be taken from these tables. If manufacturers develop SIPS assemblies that are not adequately represented by choices in these tables, they may obtain approval of these assemblies through the Energy Commission's exceptional methods process.

The credits for Quality Insulation Installation do not apply for SIPS construction.

Source: California Energy Commission

Figure 3-21 – Methods of Joining SIPS Panels

Controlled Ventilation Crawlspace

CVC Eligibility Criteria in 2008Reference Residential Appendix RA4.5.1

The Energy Commission has approved an exceptional method for buildings with raised floors that use foundation wall insulation and have automatically controlled crawl-space vents. The method is available as an option using the performance method. Refer to Figure 3-22.

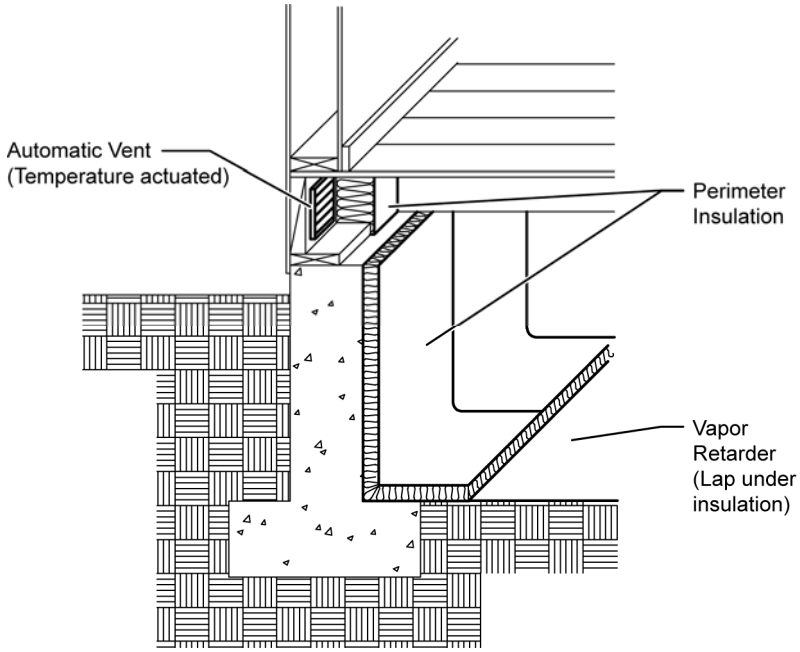

Figure 3-22 – Controlled Ventilation Crawl Space

The following eligibility criteria (from the 2008 Reference Residential Appendix RA4.5.1) are required in order to take credit for a controlled ventilation crawlspace:

- **Drainage.** Proper enforcement of site engineering and drainage, and emphasis on the importance of proper landscaping techniques in maintaining adequate site drainage, is critical.
- **Ground Water and Soils.** Local ground water tables at maximum winter recharge elevation should be below the lowest excavated site foundation elevations. Sites that are well drained and that do not have surface water problems are generally good candidates for this stem-wall insulation strategy. However, the eligibility of this alternative insulating technique is entirely at the building officials' discretion. Where disagreements exist, it is incumbent upon the applicant to provide sufficient proof that site drainage strategies (e.g., perimeter drainage techniques) will prevent potential problems.
- **Ventilation.** All crawl space vents must have automatic vent dampers to receive this credit. Automatic vent dampers must be shown on the building plans and installed. The dampers should be temperature actuated to be fully closed at approximately 40°F and fully open at approximately 70°F. Cross ventilation consisting of the required vent area reasonably distributed between opposing foundation walls is required.
- **Foam Plastic Insulating Materials.** Foam plastic insulating materials must be shown on the plans and installed when complying with the following requirements:
    - Fire Safety—CBC Section 1712(b)2. Products shall be protected as specified. Certain products have been approved for exposed use in under floor areas by testing and/or listing.
    - Direct Earth Contact—Foam plastic insulation used for crawl-space insulation having direct earth contact shall be a closed cell water resistant material and meet the slab-edge insulation requirements for water absorption and water vapor transmission rate specified in the mandatory measures.
- **Use of a Vapor Barrier (Ground Cover).** A ground cover of 6 mil (0.006 in. thick) polyethylene, or approved equal, must be laid entirely over the ground area within crawl spaces.
    - The vapor barrier must be overlapped 6 in. minimum at joints and must extend over the top of pier footings.
    - The vapor barrier should be rated as 1.0 perm or less.
    - The edges of the vapor barrier should be turned up a minimum of 4 inches at the stem wall.

- Penetrations in the vapor barrier should be no larger than necessary to fit piers, beam supports, plumbing and other penetrations.
- The vapor barrier must be shown on the plans and installed.
- If the crawl space ground slopes the vapor barrier should be spiked in place with 5 in. gutter nails.

3.4 Thermal Mass

Thermal mass consists of exposed tile floors over concrete, mass walls such as stone or brick, and other heavy elements within the building envelope that serve to stabilize indoor temperatures. Thermal mass acts for temperature much like a flywheel – it tends to keep things warmer when it is cold outside and keep things cooler when it is hot outside. In California's central valley and desert climates, the summer temperature range between night and day can be 30°F or more and thermal mass can be an effective strategy to reduce daytime cooling loads.

When thermal mass exists in exterior walls, it works to stabilize temperatures in two ways. First, there is a time delay between when the outside temperature of the wall reaches its peak and when the inside of the wall reaches its peak. For an 8-in. to 12-in. concrete wall, this time delay is on the order of 6 to 10 hours. Second, there is a dampening effect whereby the temperature range on the inside of the house is less than the temperature range on the outside of the house. These effects are illustrated in Figure 3-23.

Interior thermal mass is especially important in passive solar buildings. Passive solar buildings have large areas of south-facing fenestration. The large window area means that solar gains are quite high on winter days when the south sun is low in the sky (passive solar buildings should have south overhangs to block the sun in the summer). Large window areas also contribute to increased heat loss in the evening and at night. Without thermal mass, the south glass would create uncomfortably warm temperatures in the day and uncomfortably cold temperatures at night. Thermal mass in passive solar buildings works best if it is positioned so that the sun strikes it during the day. It can then better absorb the solar radiation for release later in the day when the space begins to cool.

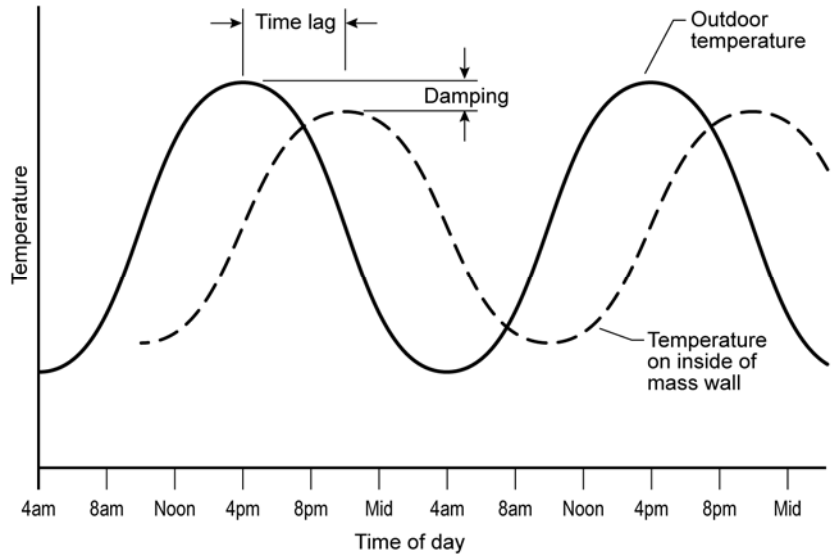

Figure 3-23 – Thermal Mass Performance

3.4.1 Mandatory Measures

There are no mandatory measures for thermal mass.

3.4.2 Prescriptive Requirements

§151(f)5
Reference Residential Appendix RA5
Table 151-A

Package D and Package E have no requirements for thermal mass, however Package C requires mass. The prescriptive requirements call for a minimum interior mass capacity (IMC). The IMC requirement for slab-on-grade buildings is 2.36 times the ground floor area. For raised floor buildings, the mass requirement is 0.18 times the ground floor area.

The Package C interior mass requirement for slab-floor buildings is equivalent to having 20 percent of the *ground floor slab area* exposed to the conditioned space.[5] A Package C slab-floor building may meet its thermal mass requirement by either calculating the IMC of all of the mass elements in the building, or by exposing 20 percent of a 3.5-in. concrete slab. Exposing the slab means covering it with tile or other materials (other than carpet) that have minimum insulating ability. See Compliance Options below for acceptable methods of “exposing” the thermal mass elements. The interior mass requirement for Package C raised-floor

[5] This assumes a standard weight (140lb/ft³) concrete slab at least 3.5 in. thick.

buildings is based on having mass equivalent in performance to 5 percent of the ground floor area consisting of exposed 2-in. thick concrete.[6]

IMC is a measure of the total thermal mass in a low-rise residential building. The procedure for calculating IMC is documented in Reference Residential Appendix RA5. This procedure is used to show compliance with the Package C prescriptive requirement (using Form WS-1R) as well as for credit under the performance approach.

Each material that contributes to the IMC has a unit interior mass capacity (UIMC) associated with it. For instance, the UIMC associated with a 6-inch exposed concrete slab is 5.1 Btu/°F-ft². If the slab is covered with a carpet, the UIMC is only 1.9 Btu/°F-ft². The UIMC of a solid-grouted 8-inch concrete masonry interior wall exposed on both sides is 9.6 Btu/°F-ft² from Table RA5-2. Tables RA5-1, RA5-2, and RA5-3 of the Reference Residential Appendix RA5 have UIMC data for common interior mass materials.

The Reference Residential Appendix RA5 procedures is to determine the surface area of each qualifying mass element, to multiply the area times the UIMC for that element and to sum the IMC values for all the mass elements. This procedure is shown in Equation RA5-1. This method allows for multiple mass types common in low-rise residential construction.

Example 3-15

Question

A Package C building has 1,000 ft² of first floor area which is slab-on-grade and another 800 ft² of second floor area. What is the requirement for IMC?

Answer

The total IMC requirement is the ground floor area of 1,000 ft² times the requirement of 2.36 Btu/°F- ft². The requirement is therefore, 2,360 Btu/°F. The second floor is not considered in determining the requirement.

3.4.3 Compliance Options

When the performance method is used, credit is offered for increasing thermal mass in buildings. However, credit for thermal mass in the proposed design may be considered only when the proposed design qualifies as a high mass building. A high mass building is one with thermal mass equivalent to having 30 percent of the conditioned slab floor exposed and 15 percent of the conditioned non-slab floor exposed 2-in.-(50 mm) thick concrete.

IMC is used to determine if a building qualifies as a high mass building, following the procedure in Reference Residential Appendix RA5. This procedure is automated in Energy Commission approved computer programs so there is no need to perform the calculations by hand.

[6] The concrete is assumed to have a volumetric heat capacity of 28, a conductivity of 0.98, a surface conductance of 1.3 and no thermal resistance on the surface. The heat capacity and conductivity performance equivalent referred to is that of standard 140 lb/ft³ concrete.

3.5 Infiltration and Air Leakage

3.5.1 Overview

Infiltration is the *unintentional* replacement of conditioned air with unconditioned air through leaks or cracks in the building envelope. It is a major component of heating and cooling loads.

Reduction in building envelope air leakage can result in significant energy savings, especially in climates with more severe winter and summer conditions. It also can result in improved building comfort, reduced moisture intrusion, and fewer air pollutants due to leakage from garages or attics. Credit is offered through compliance methods for options that reduce building envelope air leakage.

Ventilation is the *intentional* replacement of conditioned air with unconditioned air through open windows or mechanical ventilation. Ventilation in residential buildings can be achieved by opening windows either to provide natural ventilation for cooling purposes or to reduce stuffiness or odors. Energy Commission sponsored research in California homes has shown that a significant number of home occupants do not regularly open their windows for ventilation. Starting with the 2008 update it is mandatory to meet the requirements of ASHRAE Standard 62.2 which include mechanical ventilation and minimum openable window area requirements. See Section 4.6 for mechanical ventilation requirements.

3.5.2 Mandatory Measures

Ventilation Opening Area

ASHRAE Standard 62.2 requires ventilation openings in habitable spaces, toilets and utility rooms. Ventilation openings usually will mean operable windows, although a dedicated non-window opening for ventilation is acceptable. Spaces that meet the local exhaust requirements are exempted from this requirement so a complying exhaust system can be substituted for a ventilation opening (see Section 4.6.6).

Habitable Spaces

Habitable spaces are required to have ventilation openings with openable area equal to at least 4 percent of the space floor area (but not less than 5 ft^2). Rooms people occupy are considered habitable space. Dining rooms, living rooms, family rooms, bedrooms and kitchens are considered habitable space. Closets, crawl spaces, garages and utility rooms are generally not. If the washer and dryer are located in an open basement that is also the family room, it would be considered habitable space.

The openings do not have to be provided by windows. They can also be provided by operable, insulated, weather-stripped panels.

Ventilation openings, which include windows, skylights, through-the-wall inlets, window air inlets, or similar devices, shall be readily accessible to the occupant.

This means that the occupant must be able to operate the opening without having to climb on anything. An operable skylight must have some means of being operated while standing on the floor – a push rod, a long crank handle, or an electric motor.

If a ventilation opening is covered with louvers or otherwise obstructed, the openable area is the unobstructed free area through the opening.

Example 3-16 – Ventilation Openings

Question

I am building a house with a 14 ft. by 12 ft. bedroom. What size window do I need to install?

Answer

It depends on the type of window. The standard requires that the openable area of the window, not the window unit, be 4% of the floor area, or 14ft x 12ft x 0.04 = 6.7 ft^2. The fully opened area of the window or windows must be greater than 6.7 ft^2. The requirement for this example can be met using two double hung windows each with a fully opened area of 3.35 ft^2. Any combination of windows whose opened areas add up to at least 6.7 ft^2 will meet the requirement.

There are different minimum requirements for existing ("egress") in habitable rooms. These are Health and Safety Code requirements and typically require enough openable window area to exit the building through the window. Consult other code requirements because your energy compliance will need to include your total fenestration area.

Example 3-17 – Ventilation Opening Louvers

Question

There are fixed wooden louvers over a window in a bedroom. The louvers have slats that are 1/8 in thick, and they are spaced 1 in. apart. What is the reduction in openable area?

Answer

Assuming that the 1 inch spacing was measured perpendicular to the slats (the correct way), then the reduction is the slat thickness divided by the spacing, or 1/8 inch. So the credited opening area is the original opening area x (1inch – 1/8 inch)/1inch = 7/8 inch of the original opening area.

Fenestration Air Leakage

Mandatory measures for air leakage for fenestration products are covered in Section 3.2.2.

Joints and Other Openings

§117

Air leakage through cracks around windows, doors, walls, roofs and floors can result in higher energy use for home heating and cooling than necessary. The following openings in the building envelope must be caulked, gasketed, weatherstripped or otherwise sealed (see Figure 3-24):

- Exterior joints around window and door frames, including doors between the house and garage, between interior HVAC closets and conditioned space, between attic access and conditioned

space, and between wall sole plates, floors, exterior panels and all siding materials;

- Openings for plumbing, electricity, and gas lines in exterior walls, ceilings and floors;
- Openings in the attic floor (such as where ceiling panels meet interior and exterior walls and masonry fireplaces);
- Openings around exhaust ducts such as those for clothes dryers; and
- All other such openings in the building envelope

Note also that range hoods must have dampers.

Alternative approved techniques may be used to meet the mandatory caulking requirements for exterior walls. These include, but are not limited to:

- Continuous stucco,
- Caulking and taping all joints between wall components (e.g., between slats in wood slat walls),
- Building wraps, and
- Rigid wall insulation installed continuously on the exterior of the building.

Weatherstripping is required for all field-fabricated operable windows and doors (other windows and doors must meet infiltration requirements and be laboratory tested). This includes doors between the garage and the house, between interior HVAC closets and conditioned space, and between the attic access and conditioned space.

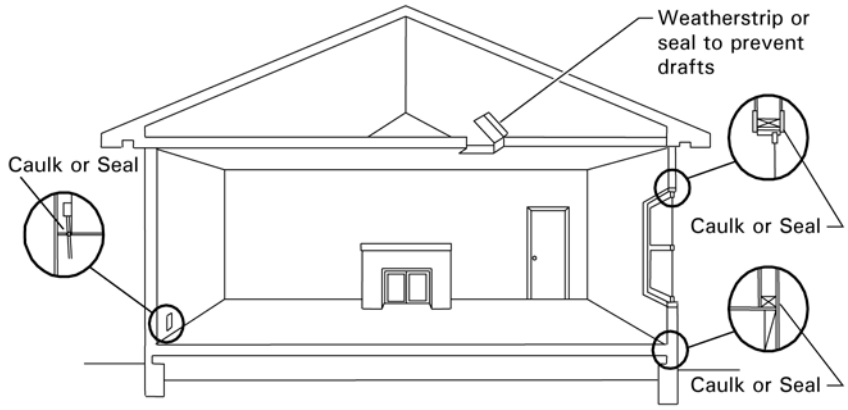

Figure 3-24 – Caulking and Weatherstripping

Fireplaces, Decorative Gas Appliances and Gas Logs

§150(e)

The Standards have mandatory measurements to limit infiltration associated with fireplaces, decorative gas appliances, and gas logs. Fireplace efficiency can be greatly improved through proper air control, and reduced infiltration is also a

benefit when the fireplace is not operating (the majority of the time for most houses).

Installation of factory-built or masonry fireplaces (see Figure 3-25) must include the following:

1. Closable metal or glass doors covering the entire opening of the firebox;
2. Doors covering the entire opening of the firebox that can be closed when the fire is burning. A combustion air intake that is at least 6 $inch^2$ to draw air from outdoors equipped with a readily accessible, operable and tight-fitting damper or combustion air control device;
3. A combustion air intake that is at least 6 $inch^2$ to draw air from outdoors equipped with a readily accessible, operable and tight-fitting damper or combustion air control device (*Exception*: An outside combustion air intake is not required if the fireplace is installed over concrete slab flooring and the fireplace is not located on an exterior wall); and
4. A flue damper with a readily accessible control. (*Exception:* When a gas log, log lighter, or decorative gas appliance is installed in a fireplace, the flue damper shall be blocked open if required by the manufacturer's installation instructions or the California Mechanical Code.)

Continuous burning pilot lights are prohibited for fireplaces as well as for decorative gas appliances and gas logs. In addition, indoor air may not be used for cooling a firebox jacket when that indoor air is vented to the outside of the building.

When a gas log, log lighter or decorative gas appliance is installed in a fireplace, the flue damper must be blocked open if required by the manufacturer's installation instructions or the California Mechanical Code.

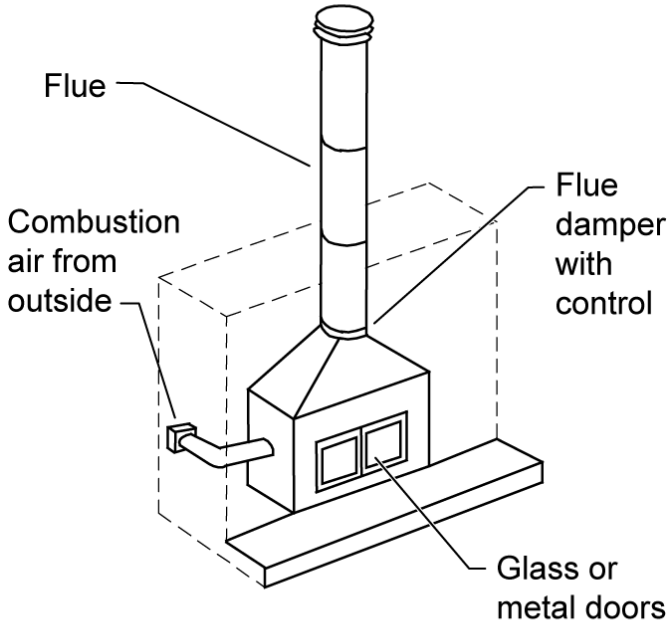

Figure 3-25 – Fireplace Installation

Example 3-18

Question

Are closable glass or metal doors required for decorative gas appliances?

Answer

No. The only requirements that apply to decorative gas appliances are the prohibition on continuously burning pilot lights and the prohibition on using indoor air to cool the firebox if the air is then vented to outdoors. If there is a question about whether a device is a fireplace, which requires glass doors, the distinction is that a fireplace has a hearth, chamber or other place in which a solid fuel fire or a decorative gas log set may be burned, while a decorative gas appliance is for visual effect only and merely simulates a fire in a fireplace.

Example 3-19

Question

If I want to have a gas log or some other device in the fireplace of my home, can I block open the damper? Can it have a standing pilot light?

Answer

§150(e)1 (which contains the requirements for fireplaces, decorative gas appliances, and gas logs), allows the flue damper to be blocked open if required by either the manufacturer's installation instructions or the California Mechanical Code. Continuously burning pilot lights in these appliances are prohibited by §150(e)2.

Example 3-20

Question

§150(e)2 states that no fireplace, decorative gas appliance or gas log can be installed if it has a continuously burning pilot light. The California Mechanical Code requires all gas appliances installed in California to have a manually operated shut-off valve, accessible to the inhabited space. Does this shut-off valve meet the intent of this section?

Answer

Not if the pilot light must be manually extinguished when the appliance is off. A unit that meets the intent of this section will have a pilot light that cannot stay on when the unit is off.

Example 3-21

Question

A building plan specifies a freestanding gas heater that is decorative; however, the equipment is vented and is rated as a room heater. Is it acceptable that this appliance have a pilot light?

Answer

Yes. Since this equipment is rated as a room heater, it can have a continuous burning pilot light.

Example 3-22

Question

Do decorative gas appliances need glass or metal doors?

Answer

Decorative gas appliances do not need doors. The door requirement applies to masonry or factory-built fireplaces only. If a decorative gas appliance is installed inside a fireplace, the fireplace needs doors. Consult with the manufacturer of the decorative gas appliance regarding combustion air requirements.

3.5.3 Compliance Options

There are several ways to take credit for infiltration reduction measures that go beyond the mandatory measures. Credit requires use of the performance compliance method and is implemented through lower air leakage assumptions. One option is blower-door testing to get an estimate of actual leakage area. Alternatively, credit is available for testing and sealing ducts and for installation of a “house wrap” (air retarding wrap).

Approved computer programs use a default specific leakage area (SLA) of 4.3 for proposed designs that do not take compliance credit for building envelope sealing. Algorithms approved by the Energy Commission keep track of the combination of infiltration, ventilation through opening windows, and continuous

mechanical ventilation. Approved computer programs can be used to determine optimal building envelope leakage levels that can be specified for compliance purposes.

Reduced Duct Leakage

If compliance credit is not taken for reduced building envelope air leakage through diagnostic testing (as described in detail below), a special "default" compliance credit can be taken for building envelope leakage reduction. To qualify for this credit all requirements for reduced duct leakage (see Section 4.4.3 of this manual), including diagnostic testing, must be met. A "default" reduction in SLA of 0.50 is allowed for this credit. This adjustment reduces the standard SLA from 4.3 to 3.8.

Air-Retarding Wrap Credit

§150(f)

If compliance credit is not taken for reduced building envelope air leakage through diagnostic testing, a special "default" compliance credit can be taken for building envelope leakage reduction resulting from installation of an air-retarding wrap.

Compliance credit is provided for a "default" reduction in SLA of 0.50 for an SLA of 3.8. This credit may be combined with the credit for reduced duct leakage, reducing the SLA by a total of 1.0, from 4.3 to 3.3.

To qualify for the "default" compliance credit, an air-retarding wrap must be tested and labeled by the manufacturer to comply with ASTM E1677-95, *Standard Specification for an Air Retarder (AR) Material or System for Low-Rise Framed Building* Walls, and have a minimum perm rating of 10. Insulating sheathing and building paper do not qualify as air-retarding wraps.

The air-retarding wrap must be installed per the manufacturer's specifications. In particular, it must meet the following installation requirements:

- The air-retarding wrap must be applied continuously,
- All tears or breaks must be repaired with manufacturer approved tape,
- All horizontal seams must be lapped in a shingle-like manner and taped,
- All vertical seams must be lapped,
- All windows and penetrations must be taped or caulked, and
- The air-retarding wrap must be taped or otherwise sealed at the slab junction.

When compliance credit is taken for an air-retarding wrap, the computer program will automatically include it and the above specifications in the *Special Features and Modeling* Assumptions section of the CF-1R to facilitate inspection by the local enforcement agency. Compliance credit for an air-retarding wrap does not require HERS rater verification.

Source: California Energy Commission

Figure 3-26 – Air-Retarding Wrap

Blower Door Testing

Additional credit is available through the performance approach when the house is specially sealed. This credit requires that the reduced building envelope leakage be verified through diagnostic testing. The testing process involves closing all the windows and doors, pressurizing the house with a special fan, usually positioned in a doorway (see Figure 3-27), and measuring the leakage. While the house is pressurized, it is usually possible to locate leaks and to correct them so that the house leakage reaches a desirable level.

Source: California Energy Commission

Figure 3-27 – Blower Door Testing

Changing the input for SLA in the computer calculation methods will show how much compliance credit is achievable with reduced infiltration. Compliance programs will report the corresponding target value for blower door test results, which is usually expressed in terms of $cfm50_H$ (cfm of air leakage when the home is pressurized to 50 Pascals). The default SLA value for a home that has not been tested is 4.3 ft^2 of leakage area per 10,000 ft^2 of floor area.

The procedure for performing the test and making the measurements is one that has been worked out through a consensus process involving experts in the field. The procedure is documented as ASTM E-779-03, *Standard Test Method for Determining Air Leakage Rate by Fan Pressurization*.

The target $cfm50_H$ value required for the blower door testing will be listed in the HERS Required Verification section on the CF-1R. The installer must perform tests to demonstrate that building envelope leakage has been reduced to the target $cfm50_H$ level or lower and document the blower door test results on the CF-6R. An approved HERS rater must also do blower door testing to verify that the target $cfm50_H$ has been achieved. The HERS rater testing is documented on the CF-4R.

Mechanical Outside Air Ventilation

"Unusually tight" building envelope construction requires mechanical ventilation that will not cause dangerous pressure imbalances. The Energy Commission considers dwellings with target or measured SLA values of 1.5 or less to be "unusually tight construction" per the California Mechanical Code, and requires that such dwellings must meet specific ventilation criteria. When the dwelling

target or measured SLA is below 1.5, combustion and solid-fuel burning appliances must be provided with adequate combustion and ventilation air from outside the structure in accordance with the requirements of ASHRAE Standard 62.2 Section 6.4.

Refer to Chapter 4 Section 6 of this manual for information about the ASHRAE Standard 62.2 requirements. Section 4.6.5 provides information about the requirements for Combustion and Solid-fuel Burning Appliances.

3.6 Vapor Barriers and Moisture Protection

A vapor barrier or retarder is a special covering over framing and insulation that protects the wall assembly components from possible damage due to moisture condensation. During cold weather, the inside of the house is warm and moist (from breathing, showers, etc.) and the outside is cold and dry. Moisture moves from more to less and from warm to cold. When the moisture (in vapor form) reaches a point in the wall or roof assembly that has a temperature below the dew point, it will condense into liquid water. Water build up can cause structural damage, create mold that may contribute to indoor air quality problems and can cause the insulation to lose its effectiveness.

3.6.1 Mandatory Measures

§150(g)

Reference Residential Appendix RA4.5.2

In climate zones 14 and 16, a continuous vapor barrier, lapped or joint sealed, must be installed on the conditioned space side of all insulation in all exterior walls, on the floors of unvented attics, and on floors over unvented crawl spaces to protect against moisture condensation.

If a building has a controlled ventilation crawl space (see Section 3.3.7), a vapor barrier must be placed over the earth floor of the crawl space to reduce moisture entry and protect insulation from condensation in accordance with Reference Residential Appendix RA4.5.2.

The Standards define a vapor barrier as material with a permeance of one perm or less. A perm is a measure of resistance to the transmission of water vapors and is equal to one grain of water vapor transmitted per ft² per hour per inch of mercury pressure difference. The Energy Commission has determined that interior painted surfaces may qualify for meeting the vapor barrier requirement if the paint product is tested to have a rating of one perm or less. For all types of vapor barriers, care should be taken to seal penetrations such as electric outlets on exterior walls.

Products such as a continuous polyethylene sheet or wall board with foil backing qualify as vapor barriers, if according to the appropriate testing procedure, they meet the vapor barrier permeance rating of one perm or less. Kraft paper backing on batt insulation, under certain circumstances, may be used to meet the continuous vapor barrier requirement. Specifically, the paper backing must meet the vapor barrier permeance rating, and the product must be installed properly.

For proper installation of batt insulation with Kraft paper backing (see Figure 3-28):

1. The Kraft paper should *not* be stapled to the sides of framing members; instead, the Kraft paper tabs on each side of the insulation batt must be fastened to the face of the conditioned side of the framing member, and
2. At the ends of the insulated cavity, the Kraft paper must overlap the framing members to create a continuous barrier at the wall cavity. Also see Wall Insulation in Reference Residential Appendix RA3.5 and RA3.5.4 for further insulation procedures.

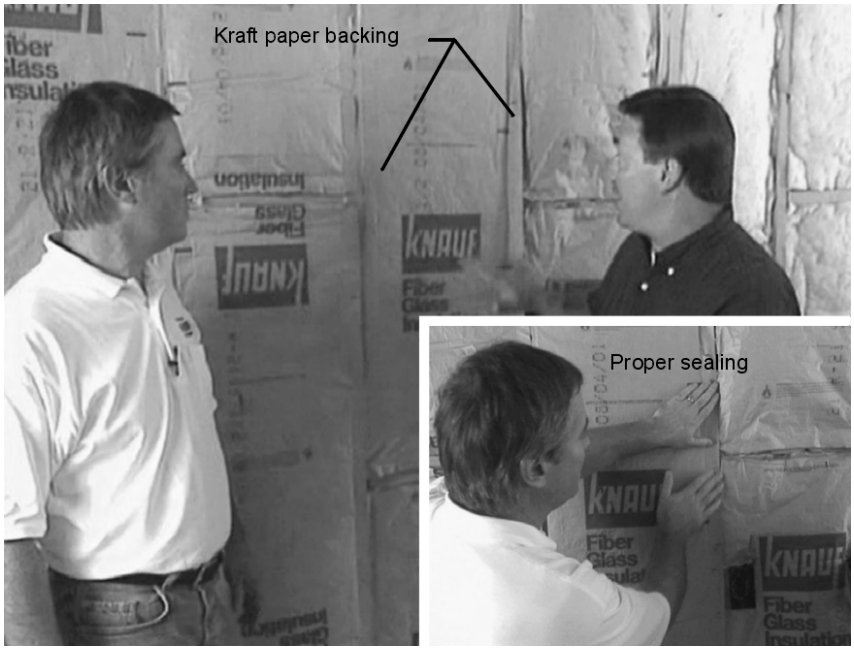

Source: California Energy Commission

Figure 3-28 – Vapor Barriers with Kraft Paper

3.7 Roofing Products (Cool Roof)

Roofing products with high solar reflectance and thermal emittance are referred to as “cool roof”, which is the outer layer or exterior surface of a roof. As the term implies, the temperature of a cool roof is lower on hot sunny days than for a conventional roof, reducing cooling loads and the energy required to provide air conditioning. Compliance credit may be taken when a cool roof is installed when using the performance approach. The credit is available only if there is no radiant barrier installed. In the performance method calculations, the cooling benefit of a cool roof is assumed to be equal to that of a radiant barrier. There is no heating impact calculated for a cool roof (while there is some heating benefit assumed for a radiant barrier).

The benefit of a high reflectance surface is obvious: while dark surfaces absorb the sun’s energy (visible light, invisible infrared. and ultraviolet radiation) and become hot, light-colored surfaces reflect solar energy and stay cooler. However,

high emittance is also important. Emittance refers to the ability of heat to escape from a surface once it is absorbed. Surfaces with low emittance (usually shiny metallic surfaces) contribute to the transmission of heat into the roof components under the roof surface. The heat can increase the building's air conditioning load resulting in increased air conditioning load and less comfort for the occupants. High-emitting roof surfaces give off absorbed heat relatively quickly through the path of least resistance—upward (and out of the building).

3.7.1 Mandatory Measures

§118(i)

Roofing Products Solar Reflectance and Thermal Emittance

All roofing products must meet the mandatory requirements of §10-113 and §118(i),. Rating and Labeling

Roofing products that are used for compliance with the standards (prescriptive and performance approaches) are required to be tested and labeled by the Cool Roof Rating Council (CRRC) per §10-113 and that liquid applied products meet minimum standards for performance and durability per §118(i)4. The CRRC is the supervisory entity responsible for certifying cool roof products. The CRRC test procedure is documented in CRRC-1, the CRRC Product Rating Program Manual. This test procedure includes tests for both solar reflectance and thermal emittance.

The roofing products manufacturer must have its roofing product tested for solar reflectance and thermal emittance, and be listed in the CRRC's Rated Product Directory (see http://www.coolroofs.org) and be labeled according to CRRC procedures. Figure 3-29 provides an example of an approved CRRC product label.

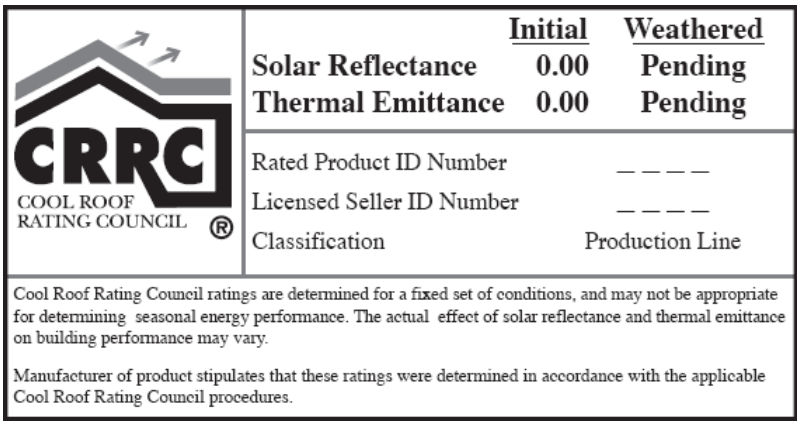

Figure 3-29- CRRC Product label and information

If the aged value for the reflectance is not available in the CRRC's Rated Product Directory then the equation below can be used until the aged rated value for the reflectance is posted in the directory.

$$\text{Aged Reflectance}_{calculated}=(0.2+0.7[\rho_{initial} - 0.2])$$

Where $\rho_{initial}$ = Initial Reflectance listed in the CRRC Rated Product Directory.

3.7.2 Prescriptive Requirements

§151 (f)12

Prescriptive Standards Roofing Product

The prescriptive requirements call for a cool roof in both low-slope and steep-slope applications for residential buildings. A low-slope roof is defined as a surface with a pitch less than or equal to 2:12 (9.5 degrees from the horizontal or less) while a steep-slope roof is a surface with a pitch greater than 2:12 (more than 9.5 degrees from the horizontal). The prescriptive requirements for cool roofs under the new 2008 Standards are now climate zone dependent and the aged reflectance and emittance criteria depend on the type of roofing material being used.

The residential roofing product requirement in the prescriptive package is as follows. For steep-sloped applications in climate zones 10-15, for roofing products that have a density of less than 5 lb/ft^2 (generally, asphalt shingle and metal products) there is a three year aged solar reflectance requirement of 0.20 and a (three year aged or initial) thermal emittance requirement of 0.75, or a minimum solar reflectance index (SRI) of 16. For roofing products with a density of 5 lb/ft^2 or more (generally include concrete, clay tiles, slate and possibly some synthetic roof coverings), in climate zones 1-16, there is a minimum aged solar reflectance of 0.15 and thermal emittance of 0.75, or a minimum SRI of 10.

For low-sloped roofing applications, in climate zones 13 and 15, there is a minimum aged solar reflectance of 0.55 and thermal emittance of 0.75, or a minimum SRI of 64.

There are two exceptions to meeting the roofing products requirements in the prescriptive package:

1. The roof area with building integrated photovoltaic panels and building integrated solar thermal panels are exempt from the minimum requirements for aged solar reflectance and thermal emittance or SRI Exception 1 to §151(f)12.
2. If roof constructions that have thermal mass over the roof membrane with a weight of at least 25 lb/ft^2 are exempt from the minimum requirements for aged solar reflectance and thermal emittance or SRI under Exception 2 to §151(f)12.

Solar Reflectance Index (SRI)

Solar Reflectance Index (SRI) is a new concept in the 2008 Standards; in lieu of meeting a thermal resistance and solar reflectance requirement, compliance can be shown by meeting a minimum SRI. The temperature of a surface depends on the surface's reflectance and emittance, as well as solar radiation. The SRI measures the relative steady-state surface temperature of a surface with respect to the standard white (SRI=100) and standard black (SRI=0) under the standard solar and ambient condition. A calculator was produced by the staff at Lawrence Berkeley National Laboratory which calculates the SRI by designating the solar

reflectance and thermal emittance of the desired roofing material. The calculator can be found at http://www.energy.ca.gov/title24/2008standards. SRI calculations shall be based on moderate wind velocity of 2-6 meters per second To calculate the SRI the 3-year aged value of the roofing product must be used. By using the SRI calculator a cool roof may comply with an emittance lower than 0.85 as long as the aged reflectance is higher. Also, SRI can be obtained by trading off a lower aged solar reflectance with a higher thermal emittance.

In addition to the questions and answers below about cool roofs, the 2008 Nonresidential Manual contains more cool roof information (including different questions and answers) in Section 3.4.

Example 3-23

Question

Is a cool roof required in new residential construction or in residential alterations or additions?

Answer

Yes, for the 2008 Title 24 Standards cool roof is required when using the prescriptive package in new residential construction, additions or alterations. Cool roof now applies to both low-slope and steep-slope residential roofs. Also, the cool roof requirement is different per climate zone and per the type of product being used (product weighing less than 5 lbs/ft² or 5 lbs/ft² or more). If one wishes not to install a cool roof then they must meet the Title 24 Standards using the performance method where tradeoffs can be done.

Example 3-24

Question

I am a salesperson and represent some roofing products, and many of them are on the EPA's Energy Star list for cool roofing materials. Is this sufficient to meet Title 24 Standards?

Answer

No. Energy Star has different requirements for reflectance and NO requirements for emittance. The Cool Roof Rating Council (http://www.coolroofs.org) is the only entity currently recognized by the Energy Commission to determine what qualifies as a cool roof under Title 24.

Example 3-25

Question

How does a product get CRRC cool roof certification?

Answer

Any party wishing to have a product or products certified by CRRC should contact CRRC to get started - call toll-free (866) 465-2523 from inside the US or (510) 485-7176, or email info@coolroofs.org. CRRC staff will walk interested parties through the procedures. In addition, CRRC publishes the procedures in "CRRC-1 Program Manual," available for free on http://www.coolroofs.org or by calling CRRC. However, working with CRRC staff is strongly recommended.

Example 3-26

Question

I've heard the words reflectivity, reflectance, emissivity, and emittance? Can you explain?

Answer

"Reflectivity" and "reflectance" denote the same thing, but the Standards use only "reflectance" to avoid confusion. "Emissivity" and "emittance" denote the same thing, and again the Standards use only "emittance."

Example 3-27

Question

I understand reflectance, but what is emittance?

Answer

Even a material that reflects the sun's energy will still absorb some of that energy as heat; there are no perfectly reflecting materials being used for roofing. That absorbed heat undergoes a physical change (an increase in wavelength, for readers who remember physics) and is given off – emitted – to the environment in varying amounts by various materials and surface types. This emittance is given a unitless value between 0 and 1, and this value represents a comparison (ratio) between what a given material or surface emits and what a perfect blackbody emitter (again, recall physics) would emit at the same temperature.

A higher emittance value means more energy is released from the material or surface; scientists refer to this emitted energy as thermal radiation (as compared to the energy from the sun, solar radiation, with shorter wavelength). Emittance is a measure of the relative efficiency with which a material, surface, or body can cool itself by radiation. Lower-emitting materials become relatively hotter for not being able to get rid of the energy, which is heat. Roof materials with low emittance therefore hold onto more solar energy as heat, get hotter than high-emittance roofs, and with help from the laws of physics, offer greater opportunity for that held heat to be given off downward into the building through conduction. More heat in the building increases the need for air conditioning for comfort. A cool roof system that reflects solar radiation (has high reflectance) and emits thermal radiation well (has high emittance) will result in a cooler roof and a cooler building with lower air-conditioning costs.

3.8 Compliance and Enforcement

Chapter 2 addresses general compliance and enforcement issues, the roles and responsibilities of each of the major parties, the compliance forms, and the process for field verification and/or diagnostic testing. This section highlights some of the compliance and enforcement issues specifically for the building envelope.

3.8.1 Design

The initial compliance documentation consists of the Certificate of Compliance (CF-1R). With the 2008 update, MF-1R is no longer a checklist, but a statement of the mandatory features to be included with the CF-1R forms. The mandatory features are also included in the CF-6R forms. The CF-1R must be filed on the plans and specifications. Included on the CF-1R is a section where special envelope features are listed. The following are envelope features that should be listed in this section if they exist in the proposed design:

- Inter-zone ventilation
- Radiant barriers
- Multiple Orientation
- Controlled ventilation crawlspace
- Non-standard ventilation height differences
- Standard free ventilation area greater than 10 percent of the window area
- High thermal mass features
- Metal-framed walls
- Sunspace with interzone surfaces
- Roofing products (Cool roof)
- Air retarding wrap

Plan checkers should verify that insulation levels, fenestration U-factors, and SHGCs listed on the CF-1R are consistent with the plans and specifications.

If registration of the CF-1R is required (see Chapter 2 for requirements), the building owner, or the person responsible for the design must submit the CF-1R to the HERS provider data registry for retention following the procedures described in Chapter 2 and in Reference Residential Appendix RA2.

3.8.2 Construction

During the construction process, the contractor and/or the sub-contractors complete the necessary sections of the Installation Certificate (CF-6R):

- Fenestration/Glazing. The glazing contractor lists all the fenestration products that are installed in the building along with the model number, the manufacturer number, the U-factor and the SHGC.
- Building Envelope Leakage Diagnostics. This is applicable only if the builder/contractor does blower door testing to reduce building envelope leakage.
- Insulation Installation Quality Certificate. The insulation contractor documents the insulation installation quality features that have been followed as shown on the CF-6R checklist.

- Description of Insulation. The insulation contractor documents the insulation materials installed in the walls, roofs, and floors along with the brand name of the materials and the thermal resistance.

The building official (field inspector) will visit the site multiple times during the construction process. The purpose of these visits is to verify that the equipment and materials installed are consistent with the plans and specifications.

If registration of the CF-6R is required, the licensed person responsible for the installation must submit the portion of the CF-6R information that applies to the installation to a HERS provider data registry using procedures described in Chapter 2 and in Reference Residential Appendix RA2.

3.8.3 Field Verification and/or Diagnostic Testing

For buildings for which the Certificate of Compliance (CF-1R) requires HERS field verification for compliance with the standards, a HERS rater must visit the site to perform field verification and diagnostic testing, to complete the applicable Envelope portions of a Certificate of Field Verification and Diagnostic Testing (CF-4R).

The following measures require field verification and diagnostic testing if they are used in the proposed design for compliance, and are listed on the CF-1R as special features requiring HERS rater verification:

- Building Envelope Sealing
- Quality Insulation Installation (QII)
- Quality Insulation Installation (QII) for Spray Polyurethane Foam

Field verification is necessary only when credit is taken for the measure. For example, Building Envelope Sealing need only be HERS verified if Building Envelope Sealing was used to achieve credit in the proposed design.

Registration of the CF-4R is required. The HERS rater must submit the CF-4R information to the HERS provider data registry as described in Chapter 2. For additional detail describing HERS verification and the registration procedure, refer to Reference Residential Appendix RA2.

3.9 Glossary/Reference

The Reference Joint Appendices JA1 contains a glossary of terms. For definitions of terms used in this manual refer to that section of the Reference Joint Appendices. The following terms either expand on those definitions or are not listed there.

Fenestration Terminology

The following terms are used in describing fenestration products.

Center of Glass U-factor or Solar Heat Gain Coefficient (SHGC). The U-factor or SHGC are measured only through glass at least 2.5 inches from the edge of the glass or dividers.

Clear. Little if any observable tint. An IG unit with an SHGC of 0.5 or greater.

Divider (Muntin). An element that actually or visually divides different lites of glass. It may be a true divided lite, between the panes, and/or applied to the exterior or interior of the glazing.

Fixed. The fenestration product cannot be opened.

Gap Width. The distance between glazings in multi-glazed systems (e.g., double- or triple-glazing). This dimension is measured from inside surface to inside surface. Some manufacturers may report "overall" IG unit thickness which is measured from outside surface to outside surface.

Grille. See Divider.

IG Unit. Insulating glass unit. An IG unit includes the glazings, spacer(s), films (if any), gas infills, and edge caulking.

Hard Coat. A pyrolytic low-e coating that is generally more durable but less effective than a soft coat. See separate glossary term for low-e coating.

Light or Lite. A layer of glazing material, especially in a multi-layered IG unit. Referred to as panes in §116 when the lites are separated by a spacer from inside to outside of the fenestration.

Low-e Coating. A transparent or semitransparent metallic coating applied to glazing that reduces the emittance of the surface and that usually affects the solar heat gain of the glass. Low-e stands for low-emissivity. The coating (or film) is generally between glazings in double-pane or triple-pane fenestration products.

Mullion. A frame member that is used to join two individual windows into one fenestration unit.

Muntin. See Dividers.

Nonmetal Frame. Includes vinyl, wood, or fiberglass. Vinyl is a polyvinyl chloride (PVC) compound used for frame and divider elements with a significantly lower conductivity than metal and a similar conductivity to wood. Fiberglass has similar thermal characteristics. Non-metal frames may have metal strengthening bars entirely inside the frame extrusions or metal-cladding only on the surface.

Operable. The fenestration product can be opened for ventilation.

Soft Coat. A low-e coating applied through a sputter process. See separate glossary term for low-e coating.

Spacer. A material that separates multiple panes of glass in an insulating glass unit.

Thermal Break Frame. Includes metal frames that are not solid metal from the inside to the outside, but are separated in the middle by a material, usually vinyl or urethane, with a significantly lower conductivity.

Tinted. Darker gray, brown or green visible tint. Also, low-e or IG unit with an SHGC less than 0.5.

Low-e Coatings

Low-emissivity coatings are special coatings applied to the second or third surfaces in double-glazed windows or skylights. As the name implies the surface

has a low emittance. This means that radiation from that surface to the surface it "looks at" is reduced. Since radiation transfer from the hot side of the window to the cool side of the window is a major component of heat transfer in glazing, low-e coatings are very effective in reducing the U-factor. They do nothing, however, to reduce losses through the frame.

In the residential market, there are two kinds of low-e coatings: low solar gain and high solar gain. Low-solar gain low-e coatings are formulated to reduce air conditioning loads. Fenestration products with low solar gain low-e coatings typically have an SHGC of 0.40 or less, and meet the SHGC prescriptive requirements for California's cooling climates. Low-solar gain low-e coatings are sometimes called spectrally selective coatings because they filter much of the infrared and ultra-violet portions of the sun's radiation while allowing visible light to pass through. High solar gain low-e coatings, by contrast, are formulated to maximize solar gains. Such coatings would be preferable in passive solar applications or perhaps in mountainous climates where heating loads are significant and there is little air conditioning.

Low-e coatings are applied in one of two ways. Pyrolytic low-e coatings are applied while the glass is being manufactured and while it is still very hot. Pyrolytic hard coat low-e coatings are sometimes called "hard" low-e coatings because they are more durable and resistant to scratching. Sputtered low-e coatings are applied after the glass leaves the float line and has been cut to size. The cut glass passes through a series of vacuum chambers where layers of metal are deposited on the surface of the glass to create precise solar optical properties. Sputter coatings are sometimes called "soft" coatings because they are less durable. Both soft and hard low-e coatings are typically positioned on the second or third surface so that they are protected from abrasion.

Another advantage of low-e coatings, especially low solar gain low-e coatings, is that when they filter the sun's energy, they generally remove between 80 percent and 85 percent of the ultraviolet light that would otherwise pass through the window and damage fabrics and other interior furnishings. This is a major advantage for homeowners and can be a selling point for builders.

National Fenestration Rating Council

The National Fenestration Rating Council (NFRC) is the entity recognized by the Energy Commission to supervise the rating and labeling of fenestration products. NFRC list the Certified Product Directory, containing NFRC certified U-factors and SHGC values for thousands of products (see http://www.nfrc.org or call 301-589-1776.)

Fenestration product performance data used in compliance calculations must be provided through the NFRC rating program and must be labeled by the manufacturer with the rated U-factor and SHGC in accordance with §10-111 procedures.

R-value

R-value is a measure of a material's thermal resistance, expressed in $ft^2(hr)°F/Btu$. R-value is the inverse of U-factor. A higher R-value and lower U-factor indicate higher energy efficiency.

The rated R-value of fiberglass (batt) insulation is based upon its fully expanded thickness and may be obtained from the Reference Joint Appendices JA4, Table 4.6.2 or from the manufacturer's literature. When the insulation is compressed, the R-value is reduced. The most common insulation compression occurs with R-19 and R-22 insulation batts installed in locations with a nominal 6-in. framing that is actually only 5.5 in. thick. To achieve its rated insulation value, an R-19 batt of insulation expands to a thickness of six and one quarter inches. If it is compressed into 2x6 framing with an actual depth of 5.5 inches, the insulation R-Value is lowered to 17.8.

Solar Heat Gain Coefficient

Solar heat gain coefficient (SHGC) is a measure of the relative amount of heat gain from sunlight that passes through a fenestration product. SHGC is a number between zero and one that represents the ratio of solar heat that passes through the fenestration product to the total solar heat that is incident on the outside of the window. A low SHGC number (closer to 0) means that the fenestration product keeps out most solar heat. A higher SHGC number (closer to 1) means that the fenestration product lets in most of the solar heat.

$SHGC_c$ is the SHGC for the center of glazing area; SHGC or $SHGC_t$ is the SHGC for the total fenestration product and is the value used for compliance with the Standards.

U-factor of Fenestration Products

U-factor is a measure of how much heat passes through a construction assembly or, for this chapter of the manual, a fenestration product. The lower the U-factor, the more energy efficient the product. The units for U-factor are Btu of heat loss each hour per ft^2 of window area per degree °F of temperature difference (Btu/hr-ft^2-°F). U-factor is the inverse of R-value.

The U-factor considers not just the losses through the center of the glass, but also losses at the edge of the glass where a metal spacer is typically used to separate the double-glazing panes, losses through the frame, and losses through the mullions. For metal-framed windows, the frame losses can be quite significant, even larger in some cases than heat losses through the glass.

$U\text{-factor}_c$ is the U-factor for the center of glazing area; $U\text{-factor}_t$ is the U-factor for the total fenestration product and is the value used for compliance with the Building Energy Efficiency Standards.

Estimating the rate of heat transfer through a fenestration product is complicated by the variety of frame configurations for operable windows, the different combinations of materials used for sashes and frames, and the difference in sizes available in various applications. The NFRC rating system makes the differences uniform, so that an entire fenestration product line is assumed to have only one typical size. The NFRC rated U-factor may be obtained from a directory of certified fenestration products, directly from a manufacturer's listing in product literature, or from the product label.

4 Building HVAC Requirements

4.1 Overview

4.1.1 Introduction and Organization

This chapter addresses the requirements for heating, ventilating, and air conditioning (HVAC) systems. The requirements are presented in this chapter so that it may serve as a single source of information for mechanical engineers and mechanical contractors.

The chapter is organized under the following topics:

1. Heating Equipment. The first section addresses the requirements for heating equipment, including mandatory measures, prescriptive requirements, and compliance options.
2. Cooling Equipment. The second section addresses cooling equipment requirements.
3. Air Distribution Ducts and Plenums. This section covers mandatory requirements such as duct insulation and duct system construction practices. This section also covers prescriptive requirements such as duct diagnostic testing and sealing, and specifications for access holes in the supply and return plenums to accommodate pressure and temperature measurements by installers and HERS raters.
4. Controls. This section addresses the requirements for thermostats and the compliance option for zonal control.
5. Indoor Air Quality and Mechanical Ventilation. This section covers mandatory requirements for indoor air quality including mechanical ventilation. All low-rise residential buildings are required to have mechanical ventilation complying with ASHRAE Standard 62.2.
6. Alternative Systems. This section covers a number of systems that are less common in California new construction, including hydronic heating, radiant floor systems, evaporative cooling, gas cooling, ground-source heat pumps, and wood space heating.
7. Compliance and Enforcement. In this section the documentation requirements at each phase of the project are highlighted.
8. Refrigerant Charge Testing. More information on the refrigerant charge testing procedure is included in this section, Glossary/Reference.

Chapter 8 covers the heating and cooling requirements for additions to existing dwellings and for alterations to existing heating and cooling systems.

4.1.2 Prescriptive Packages

The prescriptive requirements for HVAC systems vary depending on the prescriptive package selected. Both packages D and E are to be used for low-rise residential buildings that have natural gas available to them. Building envelope and duct insulation requirements differ between these two packages but field verification and diagnostic testing of the duct system is required for all climate zones in both packages.

Package C permits electric resistance space heating, but requires significantly greater insulation levels and other measures when compared to packages D and E. Field verification and diagnostic testing of ducts is also required in all climate zones under Package C.

4.1.3 Performance Method

By using the performance compliance method, designers can take credit for a number of HVAC efficiency improvements. These compliance credits are described below under the individual Compliance Options sections. Examples of measures that receive credit include improved equipment efficiency, reduced air handler fan watt draw, good duct design, cooling coil airflow, and properly sized cooling capacity.

In addition to offering compliance credits, the performance method described in Chapter 7 provides flexibility for designs that do not necessarily meet all the prescriptive requirements.

4.1.4 What's New for 2008

The following is a summary of the new HVAC measures for 2008. The following summary also includes new compliance options that provide greater flexibility in complying with the Standards when using the performance method:

1. A new prescriptive package is introduced, package E. This package requires an increase in duct insulation from R-6 to R-8, when compared to package D, in climate zones 1, 3, and 11 through 13.
2. Package D no longer contains alternatives to duct sealing; rather duct sealing is a prescriptive requirement in all climate zones for all prescriptive packages C, D and E.
3. Performance compliance credits are available for Low Leakage Ducts in conditioned space and Low Leakage Air Handlers (Furnaces).
4. For split system air conditioners in climate zones 2 and 8 through 15, refrigerant charge measurement is a prescriptive requirement. Thermostatic expansion valves can no longer serve as an alternative to the refrigerant charge verification requirement; however, the installation of a charge indicator display can serve as an alternative.
5. All prescriptive packages with central forced air handlers in climate zones 10 through 15 are required to meet the cooling coil airflow

and fan watt draw criteria. See Reference Residential Appendix RA3.3.

6. Compliance performance credits are available for cooling coil airflows that exceed the prescriptive requirements and for fan watt draws that are less than the prescriptive requirements.
7. Energy Commission sponsored research in California homes has shown that a significant number of home occupants do not regularly open their windows for ventilation. Starting with the 2008 update, it is mandatory to meet the requirements of ASHRAE Standard 62.2 which include mechanical ventilation and minimum openable window area requirements. This mandatory measure is discussed in greater detail in Section 3.5. Also see Section 4.6 for mechanical ventilation requirements.
8. If a central fan integrated ventilation system is used to meet the ASHRAE 62.2 Standard, the watt draw of the furnace fan in ventilation mode is limited.
9. Added to the compliance performance credit for air conditioners with EERs higher than the prescriptive standard are credits for evaporatively cooled condenser systems and ice storage systems.
10. The maximum rated total cooling capacity performance credit has been modified.

4.1.5 Common System Types

The typical new California home in the central valley and the desert has a gas furnace and a split system air conditioner. In some areas, a heat pump provides both heating and cooling, eliminating the furnace. In coastal climates and in the mountains, air conditioning is rare and most new homes are heated by gas furnaces. Heating and cooling is typically distributed to each of the rooms through air ducts. Most of the mandatory measures and prescriptive requirements are based on this type of system.

Although the Standards focus on the typical system, they also apply to other systems as well, including hydronic systems, where hot water is distributed to provide at least some of the heat to conditioned space; in contrast with ducted systems that distribute heated air to heat the space. Electric resistance systems are also used in some areas and applications, although it is difficult for them to comply under the Standards. Ground-source heat pump (geo-exchange) systems are also used, especially in areas where there is no gas service. This chapter focuses mostly on typical systems, but a section is provided to deal with the alternative systems as well.

4.1.6 Appliance Standards and Equipment Certification

§110 – General

§111 – Appliance Efficiency Regulations

Most heating and cooling equipment installed in new California homes is regulated by the National Appliance Efficiency Conservation Act (NAECA) and/or the California *Appliance Efficiency Regulations*. Both the federal and state

appliance standards apply to the manufacture of new equipment and are applicable for equipment used in replacements, repairs or for any other purpose. The Appliance Efficiency Regulations are enforced at the point of sale, while the Energy Efficiency Standards covered by this compliance manual are enforced by the enforcement agency.

The following types of heating and cooling equipment are covered by the Appliance Efficiency Regulations. For this equipment, the manufacturer must certify that the equipment complies with the *Appliance Efficiency Regulations* at the time of manufacture.

Covered by the Appliance Efficiency Regulations:

• Room air conditioners • Room air conditioning heat pumps • Central air conditioners with a cooling capacity of less than 135,000 Btu/hr • Central air conditioning heat pumps	• Gas-fired central furnaces • Gas-fired boilers • Gas-fired furnaces • Gas-fired floor furnaces • Gas-fired room heaters • Gas-fired duct furnaces • Gas-fired unit heaters

The Appliance Efficiency Regulations do not require certification for:

1. Infrared heaters
2. Electric resistance heaters
3. Oil-fired furnaces (some are voluntarily listed with certified gas-fired furnaces).

Equipment that does not meet the Federal Appliance Efficiency Standards may not be sold in California. Any equipment covered by the *Appliance Efficiency Regulations* and sold in California must have the date of manufacture permanently displayed in an accessible place on that equipment. This date is frequently included as part of the serial number.

Note: Equipment manufactured before the effective date of a new standard may be sold and installed in California indefinitely, as long as the performance and prescriptive approach demonstrates energy compliance of the building using the lower efficiency of the relevant appliances.

4.2 Heating Equipment

This section addresses the requirements for heating equipment, including furnaces, boilers, heat pumps and electric resistance equipment.

4.2.1 Mandatory Measures

Equipment Efficiency

§111 and §112(a) *Appliance Efficiency Regulations*

The efficiency of most heating equipment is regulated by NAECA (the federal appliance standard) and the California Appliance Efficiency Regulations. These regulations are not contained in the Building Energy Efficiency Standards but are published separately. These regulations are referenced in §111. The Appliance Efficiency Regulations include definitions for all types of equipment. The energy efficiency of larger equipment is regulated by §112(a). Also, see the Nonresidential Compliance Manual for more information on larger equipment.

Gas and Oil Space Heaters

The current Appliance Efficiency Regulations require that the Annual Fuel Utilization Efficiency (AFUE) of all new central furnaces be at least 78 percent for equipment with output capacity less than 225,000 Btu/hr. Central furnaces with outputs greater than or equal to 225,000 Btu/hr are rated according to their Thermal (or Steady State) Efficiency. Gas and oil-fired central boilers have the following AFUE or Combustion Efficiency requirements:

Table 4-1 – Minimum Heating Efficiency for Boilers

Type	Capacity	AFUE	Combustion Efficiency
Gas Steam Boilers (Single Phase)	Less than 300,000 Btu/h	75%	
Gas Packaged Boilers	300,000 Btu/h or larger		80%
Other Boilers (Single Phase)	Less than 300,000 Btu/h	80%	
Oil Package Boilers	300,000 Btu/h or larger		83%

Source: California Appliance Efficiency Regulations Table E-3

Non-central gas space heaters shall be certified to have AFUE values greater than or equal to those listed in Table 4-2 below:

Table 4-2 – Minimum Heating Efficiency for Non-Ducted, Non-Central Gas Fired Heating Equipment

Type	Capacity	AFUE
Wall Furnace (fan type)	up to 42,000 Btu/hour	73%
	over 42,000 Btu/hour	74%
Wall Furnace (gravity type)	up to 10,000 Btu/hour	59%
	over 10,000 Btu/hour up to 12,000 Btu/hour	60%
	over 12,000 Btu/hour up to 15,000 Btu/hour	61%
	over 15,000 Btu/hour up to 19,000 Btu/hour	62%
	over 19,000 Btu/hour up to 27,000 Btu/hour	63%
	over 27,000 Btu/hour up to 46,000 Btu/hour	64%
	over 46,000 Btu/hour	65%
Floor Furnace	up to 37,000 Btu/hour	56%
	over 37,000 Btu/hour	57%
Room Heater	up to 18,000 Btu/hour	57%
	over 18,000 Btu/hour up to 20,000 Btu/hour	58%
	over 20,000 Btu/hour up to 27,000 Btu/hour	63%
	over 27,000 Btu/hour up to 46,000 Btu/hour	64%
	over 46,000 Btu/hour	65%

Source: California Appliance Efficiency Regulations Table E-2

The AFUE of mobile home furnaces shall be certified not to be less than 75 percent.

Heat Pumps and Electric Heating

Table 4-3 summarizes the energy efficiency requirements for heat pumps. There are no minimum appliance efficiency standards for electric-resistance or electric-radiant heating systems.

Table 4-3 – Minimum Heating Efficiency for Heat Pumps

Equipment Type	Appliance Efficiency Regulations Reference	Configuration / Size	Minimum Heating Efficiency
Room heat pumps	Table B-2	Any	Cooling standard only
Packaged terminal heat pumps	Table B-3	Any	1.3 +[0.00016 x Cap)] COP
Single phase air source heat pumps (NAECA)	Table C-2	< 65,000 Btu/h Cooling Capacity	Packaged 7.7 HSPF 1 Split 7.7 HSPF 1
		Through-the-wall < 65,000 Btu/h Cooling Capacity	See Appliance Efficiency Regulations
		Small duct high velocity < 65,000 Btu/h Cooling Capacity	See Appliance Efficiency Regulations
Three-phase air source heat pumps	Table C-3	< 65,000 Btu/h	See Appliance Efficiency Regulations
Water-source heat pumps	Table C-5	< 135,000 Btu/h	4.2 COP
		≥ 135,000 Btu/h, < 240,000 Btu/h	2.9 COP
1. HSPF values in parentheses indicate minimum efficiency effective January 23, 2006.			

Source: California Appliance Efficiency Regulations

Heat Pump Controls

§112(b), Exception to §112(c)

Any heat pump with supplementary electric resistance heating must have controls that have two capabilities to limit the electric resistance heating. The first is to set the cut-on and cut-off temperatures for compression and supplementary heating at different levels. For example, if the heat pump begins heating when the inside temperature reaches 68°F, the electric resistance heating is set to come on if the temperature gets below 65°F; and there is an opposite off mode such that if the heat pump shuts off when the temperature reaches 72°F, the back-up heating shuts off at 68°F.

The second control capability prevents the supplementary electric resistance heater from operating when the heat pump alone can meet the heating load, except during defrost. There is a limited exception to this second function for “smart thermostats” that provide: intelligent recovery, staging, ramping, or another control mechanism that prevents the unnecessary operation of supplementary electric resistance heating when the heat pump alone can meet the heating load.

To meet the thermostat requirements, a thermostat for a heat pump must be a “smart thermostat” that minimizes the use of supplementary heating during startup and recovery from setbacks.

Note: Room air conditioner heat pumps are not required to comply with the thermostat requirements.

Equipment Sizing

§150(h)

The Standards do not set limits on the sizing of heating equipment, but they do require that heating loads be calculated for new heating systems. Oversized equipment typically operates less efficiently and can create comfort problems due to excessive cycling and high airflow.

Acceptable load calculation procedures include methods described in the ASHRAE Handbook – Equipment, ASHRAE Handbook – Applications, ASHRAE Handbook – Fundamentals, SMACNA Residential Comfort System Installation Manual, or ACCA Manual J.

The Standards require that the outdoor design conditions for load calculations be selected from Reference Joint Appendix JA2, and that the indoor design temperature for heating load calculations be 70°F. The outdoor design temperature must be no lower than the heating winter median of extremes as listed in the Reference Joint Appendix JA2. If the actual city location for a project is not included in the Reference Joint Appendix JA2, or if the data given for a particular city does not match the conditions at the actual site as well as that given for another nearby city, consult the local building department for guidance.

The load calculations must be submitted with compliance documentation when requested by the building department. The load calculations may be prepared by 1) the documentation author and submitted to the mechanical contractor, 2) a mechanical engineer, or 3) the mechanical contractor who is installing the equipment.

Standby Losses and Pilot Lights

§115

Fan-type central furnaces may not have a continuously burning pilot light. This requirement does not apply to wall furnaces, floor furnaces or any gravity type furnace. Household cooking appliances also must not have a continuously burning pilot light except for those without an electrical supply voltage connection and in which each pilot consumes less than 150 Btu/hr.

§112(d)

Larger gas-fired and oil-fired forced air furnaces with input ratings ≥ 225,000 Btu/h (which is bigger than a typical residential furnace) must also have an intermittent ignition or interrupted device (IID), and either power venting or a flue damper. A vent damper is an acceptable alternative to a flue damper for furnaces where combustion air is drawn from the conditioned space. All furnaces with input ratings ≥ 225,000 Btu/h, including electric furnaces, that are not located within the conditioned space must have jacket losses not exceeding 0.75 percent of the input rating.

4.2.2 Prescriptive Requirements

§151(f)6 Heating System Type

Prescriptive Packages D and E require that a gas heating system or a heat pump be installed. The minimum energy efficiency of the heating equipment is specified by the mandatory measures (see above).

Package C allows electric resistance and electric radiant heating, but insulation and other measures are more stringent.

Under the performance compliance method, a small credit is available for electric radiant panel heating systems relative to electric baseboard systems.

4.2.3 Compliance Options

With the performance compliance method, credit can be taken for selecting high efficiency heating equipment, such as a high efficiency furnace or heat pump. With a furnace, for example, the minimum requirement is an AFUE of 78 percent, but units are available with AFUE of 90 percent or better.

4.3 Cooling Equipment

This section addresses the requirements for primary cooling equipment.

4.3.1 Mandatory Measures

Equipment Efficiency

§111 and §112(a)

Appliance Efficiency Regulations

The efficiency of most cooling equipment is regulated by NAECA (the federal appliance standard) and the California Appliance Efficiency Regulations. These regulations are not contained in the Building Energy Efficiency Standards but rather in separate documents. These regulations are referenced in §111. The Appliance Efficiency Regulations include definitions for all types of equipment. The energy efficiency of larger equipment is regulated by §112(a). See the Nonresidential Compliance Manual for information on larger equipment.

Central, Single Phase Air Conditioners and Air Source Heat Pumps (under 65,000 Btu/h)

The central, single phase air conditioners and air source heat pumps that are most commonly installed in residences have a smaller capacity than 65,000 Btu/h. The Appliance Efficiency Regulations for this equipment require minimum Seasonal Energy Efficiency Ratios (SEER).

The Seasonal Energy Efficiency Ratio of all new central, single phase air conditioners and air source heat pumps with output less than 65,000 Btu/h shall be certified not to be less than the values listed below.

Table 4-4 – Minimum Cooling Efficiencies for Central Air Conditioners and Heat Pumps

Appliance	Type	SEER
Central Air Conditioners	Split System	13.0
	Single Package	13.0
Central Air Source Heat Pumps	Split System	13.0
	Single Package	13.0

Source: California Appliance Efficiency Regulations Table C-2

Other Air Conditioners and Heat Pumps

Appliance Efficiency Regulations

The current Appliance Efficiency Regulations for larger central air conditioners and heat pumps, and for all room air conditioners and room air conditioner heat pumps shall be certified by the manufacturer to not to be less than the values listed in Table 4-5 and Table 4-6.

Table 4-5 – Minimum Cooling Efficiency for Larger Central Air Conditioners and Heat Pumps

Equipment Type	Size Category	EER
Central Air Conditioners	≥ 65,000 Btu/h but <135,000 Btu/h	8.9
Central Air Source Heat Pumps	≥ 65,000 Btu/h but <135,000 Btu/h	8.9
Central Water Source Heat Pumps	< 17,000 Btu/h	11.2
Central Water Source Heat Pumps	≥ 17,000 Btu/h and < 135,000 Btu/h	12.0

Source: California Appliance Efficiency Regulations Table C-3, C-5

Table 4-6 – Minimum Cooling Efficiency for Non-Central Space Cooling Equipment

Including Room Air Conditioners; and Room Air Conditioner Heat Pumps; Package Terminal Air Conditioners (PTAC); and Package Terminal Heat Pumps (PTHP)

Equipment Type	Size Category (Input)	Minimum Efficiency
Room Air Conditioners, with Louvered Sides	< 6,000 Btu/h	9.7 EER
	≥ 6,000 Btu/h and < 8,000 Btu/h	9.7 EER
	≥ 8,000 Btu/h and < 14,000 Btu/h	9.8EER
	≥ 14,000 Btu/h and < 20,000 Btu/h	9.7 EER
	≥ 20,000 Btu/h	8.5 EER
Room Air Conditioners, without Louvered Sides	< 6,000 Btu/h	9.0 EER
	≥ 6,000 Btu/h and < 8,000 Btu/h	9.0 EER
	≥ 8,000 and <20,000 Btu/h	8.5 EER
	≥ 20,000 Btu/h	8.5 EER
Room Air Conditioner Heat Pumps with Louvered Sides	< 20,000 Btu/h	9.0 EER
	≥ 20,000 Btu/h	8.5 EER
Room Air Conditioner Heat Pumps without Louvered Sides	< 14,000 Btu/h	8.5EER
	≥ 14,000 Btu/h	8.0 EER
Casement-Only Room Air Conditioner	All Capacities	8.7 EER
Casement-Slider Room Air Conditioner	All Capacities	9.5 EER
PTAC and PTHP	≤ 7,000 Btu/h	8.88 EER
	> 7,000 and < 15,000 Btu/h	10.0 – (0.00016 x Cap) EER
	≥ 15,000 Btu/h	7.6 EER

Source: California Appliance Efficiency Regulations TablesB-2 and B-3

Insulation for Refrigerant Lines in Split System Air Conditioners

§150(j)2
§150(m)9

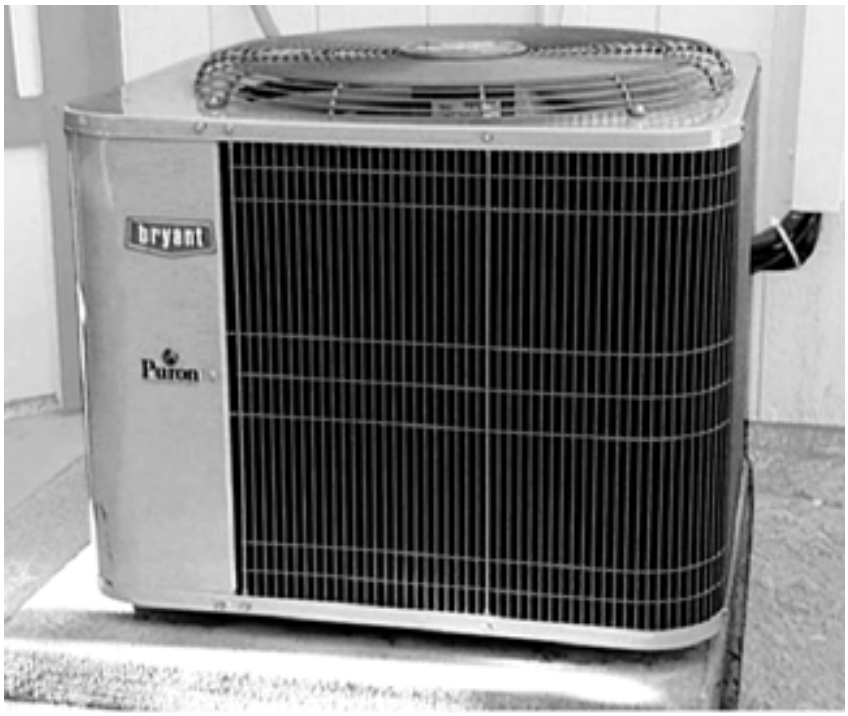

Source: California Energy Commission

Figure 4-1 – Outdoor Compressor/Condenser Unit

Two refrigerant lines connect the indoor and outdoor units of split system air conditioners and heat pumps: the liquid line (the smaller line) and the suction line (the larger line). The liquid line is at an elevated temperature, and heat escaping from it is helpful; therefore, it should not be insulated. However, the suction line carries refrigerant vapor that is cooler than ambient in the summer and (with heat pumps) warmer than ambient in the winter. This line, when less than or equal to 2 inches. (50 mm) in diameter, it must be insulated with at least 0.75 inches (19 mm) of insulation per the requirements of §150(j)2. When cooling systems contain suction lines greater than 2 inches in diameter, §150(j)2 requires a minimum insulation level of 1 inch (25 mm).

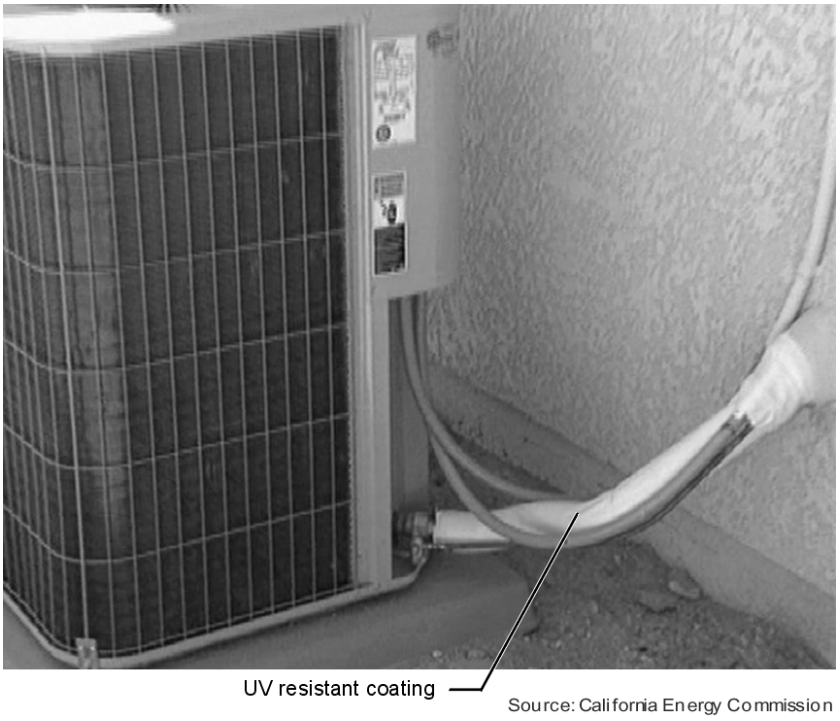

Figure 4-2 – Refrigerant Line Insulation

Insulation used with the suction line must be protected from physical damage or from UV deterioration. Pipe insulation in outdoor locations is typically protected by an aluminum or sheet metal jacket, painted canvas, plastic cover, or coating that is water retardant and UV resistant. See §150(m)9. See Figure 4-2.

Equipment Sizing

§150(h), §151(b)

Just as for heating equipment, the Standards do not set limits on the size of cooling equipment, but they do require that cooling loads be calculated for new cooling systems. Avoiding oversizing is especially important for cooling equipment because efficiency degrades when the system cycles on and off frequently.

The Standards offer a compliance credit when the installed air conditioning equipment is sized in accordance with the Reference Residential Appendix RA1 Maximum Rated Cooling Capacity for compliance credit sizing calculations. A HERS rater field verification is required to confirm that the installed equipment conforms to the sizing criteria as reported on the CF-1R.

The outdoor design conditions for load calculations must be selected from Reference Joint Appendix JA2, Table 2-3, using values no greater than the 1.0 percent Cooling Dry Bulb and Mean Coincident Wet Bulb values listed. The indoor design temperature for cooling load calculations must be 75°F.

Cooling load calculations must be submitted with compliance documentation when requested by the building department. The load calculations may be prepared by:

1) The documentation author and submitted to the mechanical contractor, or

2) A mechanical engineer, or

3) The mechanical contractor who is installing the equipment.

4.3.2 Prescriptive Requirements

§151(f)7

The prescriptive packages C, D, and E, for split system equipment in climate zones 2 and 8 through 15, require refrigerant charge measurement (RCM) and the installation of temperature measurement access holes (TMAH) and saturation temperature measurement sensors (STMS). The RCM must be HERS verified. TMAH and STMS make non-intrusive methods for HERS verification of RCM possible. The alternative to the RCM, TMAH, and STMS is the installation of a refrigerant charge indicator display (§151(f)7Aii).

Refrigerant Charge Measurement (RCM)

The prescriptive standards require that a HERS rater verify that split system air conditioners and heat pumps have the correct refrigerant charge. The RCM procedures that HERS raters are required to follow are documented in the Reference Residential Appendix RA3.2. Packaged units are not required to have refrigerant charge measurement.

The measurement and regulation of correct refrigerant charge can significantly improve the performance of air conditioning equipment. Refrigerants are the working fluids in air conditioning and heat pump systems that absorb heat energy from one area (the evaporator) and transfer it to another (the condenser).

Refrigerant charge refers to the actual amount of refrigerant present in the system. Excessive refrigerant charge (overcharge) reduces system efficiency and can lead to premature compressor failure. Insufficient refrigerant charge (undercharge) also reduces system efficiency and can cause compressors to overheat.

Temperature Measurement Access Holes (TMAH)

TMAH provide a non-intrusive means for refrigerant charge verification by HERS raters and other third party inspectors, since they eliminate the need for the raters/inspectors to drill holes into the installed air conditioning equipment enclosures for placement of the temperature sensors that are required by the refrigerant charge verification test procedures described in the Reference Residential Appendix RA3.2.

Installation of TMAH must be performed by the installer of the air conditioner or heat pump equipment according to the specifications given in Reference Residential Appendix RA3.2.

The TMAH feature consists of two 5/16 inch (8 mm) holes in the plenum, one upstream from the evaporator coil and one downstream from it (see diagram in Reference Residential Appendix RA3.2).

Saturation Temperature Measurement Sensors (STMS)

The STMS provide a non-intrusive means for refrigerant charge verification by HERS raters and other third party inspectors, since they eliminate the need for a rater/inspector to open the system's refrigerant service access ports to install refrigerant pressure gauges on the suction and discharge lines. The test procedures that utilize these STMS are described in the Reference Residential Appendix RA3.2.

The STMS feature consists of two permanently installed temperature sensors, one mounted on the evaporator coil and one mounted on the condenser coil. The sensors are required to be factory installed, or field installed according to manufacturer's specifications, or otherwise installed in accordance with an alternative installation/instrumentation specification that must be approved by the Executive Director. These STMS must be equipped with industry standard mini plugs that allow the system installers and HERS raters to use the sensors to measure the coil saturation temperature by attaching the temperature sensor mini plugs to a digital thermometer instrument.

To adjust or check the refrigerant charge on an air conditioning system using the standard charge measurement procedures in Reference Residential Appendix RA3.2, it is necessary to determine the instantaneous "saturation temperature" in the evaporator coil and in the condenser coil. A refrigeration technician typically determines this temperature by measuring the coil pressure and using a saturation temperature chart to look up the saturation temperature at that pressure.

Another way to determine the saturation temperature in the coil is to measure the temperature of the refrigerant tubing in the saturation temperature region of one of the tubing circuits in the coil. The saturation temperature measurement is made utilizing a temperature sensor that has been permanently installed for this purpose by the equipment manufacturer or the air conditioning contractor.

For a coil in a typical system operating at steady state, approximately 75 percent of the length of any tubing circuit in the coil will be at a constant saturation temperature and pressure (the refrigerant is undergoing a phase change). To determine the location of the saturation temperature region of the circuit, trace the path of the refrigerant tubing circuit from the inlet of the tubing circuit, to the outlet of the tubing circuit.

In the condenser coil, generally the first 10 to 20 percent of each tubing circuit contains superheated vapor; the center 60 to 80 percent of the tubing circuit contains refrigerant undergoing a phase change (condensing the vapor into a liquid at a constant temperature); and the last 10 to 20 percent of the tubing circuit contains sub-cooled liquid. Figure 4-3 shows a condenser coil with multiple tubing circuits, and a Type K thermocouple attached to the saturation temperature region of one of the tubing circuits.

In the evaporator coil, the first 60 percent or more of the circuit contains refrigerant changing from liquid to vapor at the saturation temperature, and the last portion of the circuit contains superheated vapor. Figure 4-4 shows an evaporator coil with a simple tubing circuit.

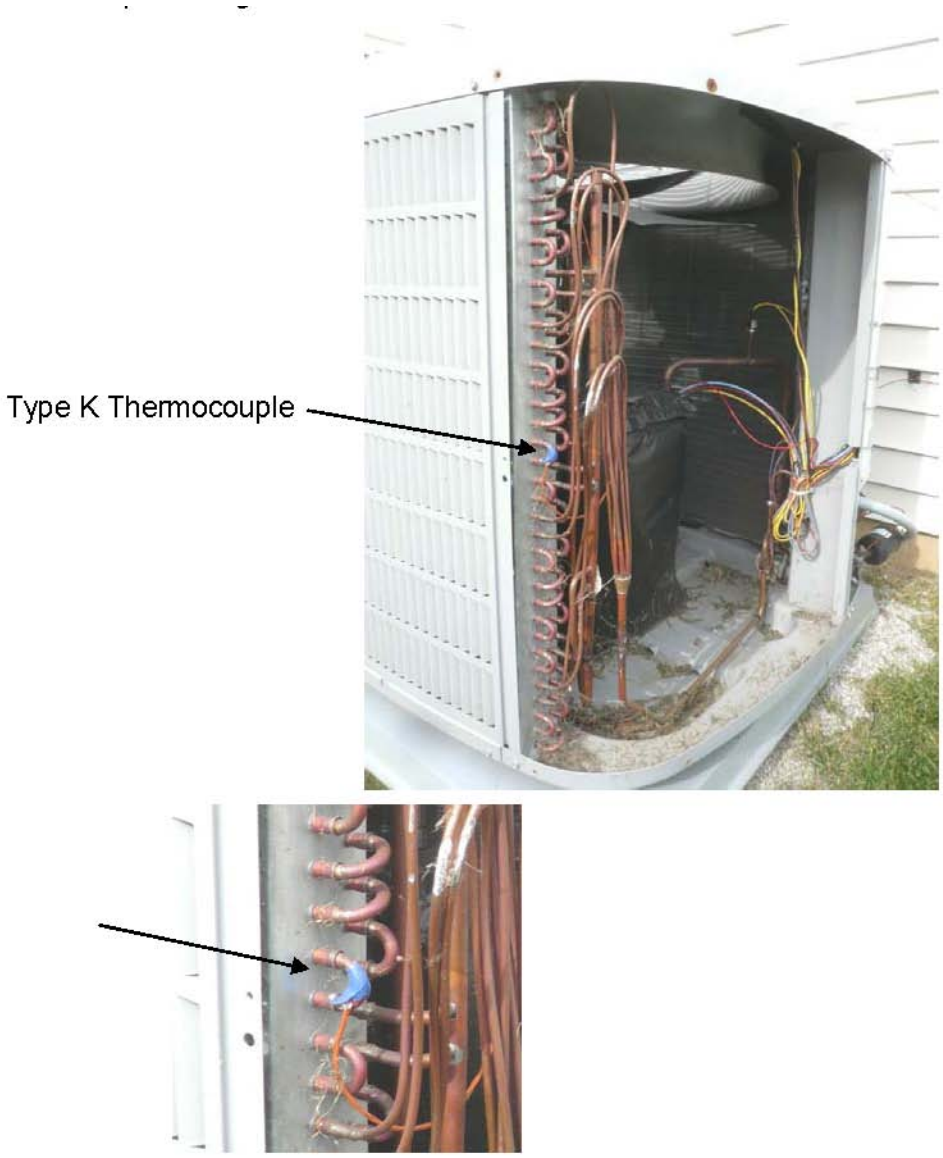

Figure 4-3 – Condenser Coil with STMS attached

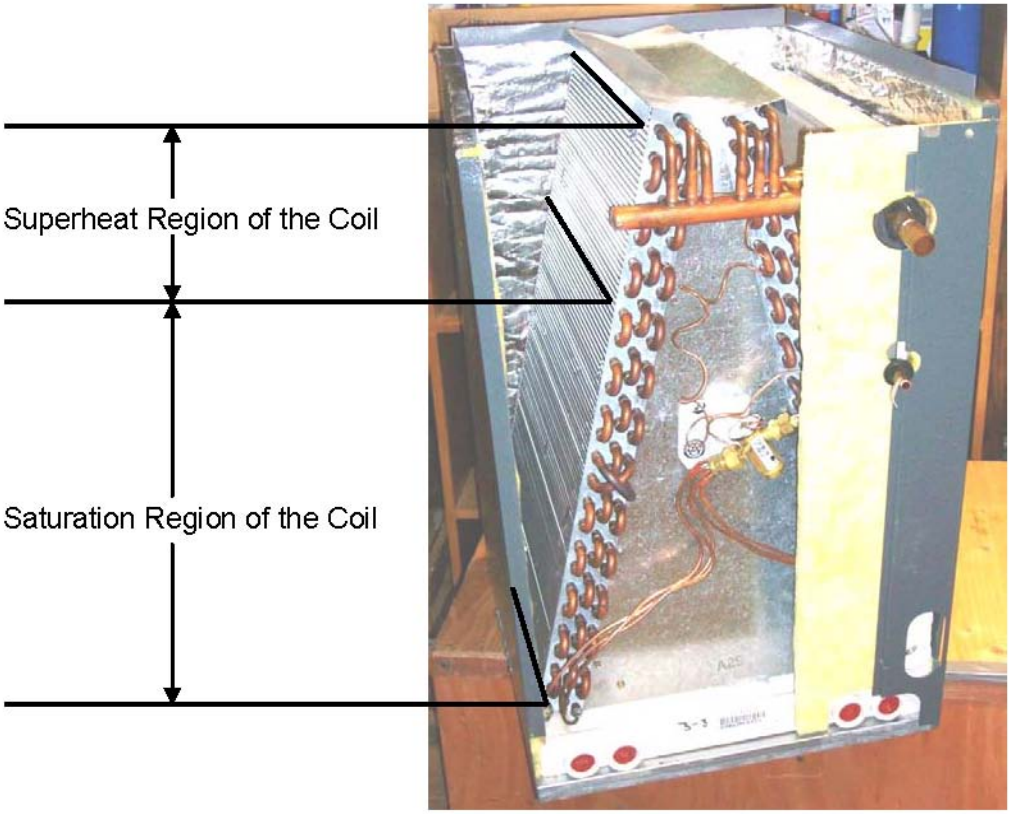

Figure 4-4 – Evaporator Coil

Thermocouples shall be type K with the sensing tip permanently attached to the refrigerant piping and insulated with cork tape at the location specified by the equipment manufacturer. An industry standard plug shall be lead to the outside of the equipment where it will be accessible to technicians or HERS raters without any disassembly of the equipment.

If the manufacturer's thermocouple installation instructions are not available, the system designer shall include specifications on the system's design drawings for the installed location of the thermocouples. The air conditioning contractor shall install the thermocouple in good contact with the tube bend at the specified location and insulate it from the surrounding air to provide a direct measurement of the coil “saturation temperature”.

Charge Indicator Display

The installation of a charge indicator display (CID), if verified by a HERS rater, may be used as an alternative to the prescriptive requirement for HERS diagnostic testing of the refrigerant charge in split system air conditioners and heat pumps. The purpose of the CID is to provide real-time information to the building occupant about the status of the system refrigerant charge, metering device, and cooling coil airflow. The CID will monitor and determine the operating performance of split system air conditioners and heat pumps, and provide visual indication to the system owner or operator if the system’s refrigerant charge,

airflow, or metering device performance does not conform to approved target parameters for minimally efficient operation. Thus, if the charge indicator display signals the owner/occupant that the system requires service or repair, the occupant can immediately call for a service technician to make the necessary adjustments or repairs. A CID can provide significant benefit to the owner/occupant by alerting the owner/occupant to the presence of inefficient operation that could result in excessive energy use/costs over extended periods of time. A CID can also indicate system performance faults that could result in system component damage or failure if not corrected, thus helping the owner/occupant to avoid unnecessary repair costs.

Charge Indicator Display technologies shall be factory installed, or field installed according to manufacturer's specifications. Reference Joint Appendix JA6 contains more information about CID technologies.

The presence of a CID on a system must be field verified by a HERS rater. See Reference Residential Appendix RA3.4.2 for the HERS verification procedure, which consists of a visual verification of the presence of the installed CID technology. The rater must inspect to see that the visual indication display component of the installed CID technology is mounted adjacent to the split system's thermostat. The rater must also observe that the system reports no system faults when the system is operated continuously for at least 15 minutes when the indoor air temperature returning to the air conditioner is above 65°F.

Cooling Coil Airflow; Fan Watt Draw; and Hole for the Placement of a Static Pressure Probe (HSPP) or Permanently Installed Static Pressure Probe (PSPP)

Prescriptively in climate zones 10 through 15 the central forced air system fans must maintain airflow greater than 350 CFM per nominal ton of cooling capacity across the cooling coil and have a fan watt draw less than 0.58 Watts/CFM. This measure is applicable under prescriptive packages C, D, and E. This measure requires builders to improve air handler fans and air conditioner efficiency by improving their duct systems and possibly by installing higher efficiency air handlers.

Reducing the watt draw of central forced air systems provides significant peak demand savings because they are generally running continuously on the hottest days when the electricity system peaks occur. Adequate airflow also provides peak demand savings because it increases the sensible Energy Efficiency Ratio (EER) of air conditioning systems, particularly at the high outdoor dry bulb temperatures on peak demand days. Adequate airflow and low watt draw save electricity throughout the cooling season, and low fan watt draw saves electricity in the heating season as well.

When cooling coil airflow and fan watt draw is required prescriptively, there must be a hole, provided in the supply plenum by the installing contractor, for the placement of a static pressure probe (HSPP) or a permanently installed static pressure probe (PSPP) must be installed. The HSPP or PSPP must be installed in the required location, in accordance with the specifications detailed in Reference Residential Appendix RA3.3. The HSPP or PSPP is required in order to facilitate cooling coil airflow measurement when using devices/procedures that depend on supply plenum pressure measurements. The HSPP or PSPP allows HERS raters to perform the required diagnostic airflow testing in a non-intrusive

manner, by eliminating the necessity for the rater to drill holes in the supply plenum for placement of pressure measurement probes.

There are three acceptable methods allowed for use in determining compliance with the cooling coil airflow requirement as described in Reference Residential Appendix RA3.3:

- use of a flow capture hood to measure the total airflow through the return grill(s), or
- a flow grid device at the return grill(s) or other location where all the central fan airflow passes through the flow grid, or
- using a fan flow meter device to perform the plenum pressure matching procedure.

The flow grid measurement device, and the fan flow meter measurement device both require access to static pressure measurements of the airflow exiting the cooling coil, which utilizes the HSPP or PSPP mentioned above.

Heating-only space-conditioning systems are not required to meet the prescriptive cooling coil airflow and fan watt draw requirements.

The airflow measurement procedures described in Reference Residential Appendix RA3.3 are also allowed to be used for determining compliance with the minimum airflow requirement for the refrigerant charge verification protocol - as an alternative to using the temperature split method that is described in the Reference Residential Appendix RA3.2. However, the temperature split method is not allowed to be used to determine compliance with the cooling coil airflow requirements.

4.3.3 Compliance Options

There are several options for receiving compliance credit related to the cooling system. These credits are available through the performance compliance method.

High Efficiency Air Conditioner

Air conditioner efficiencies are determined according to federal test procedures. The efficiencies are reported in terms of Seasonal Energy Efficiency Rating (SEER) and Energy Efficiency Rating (EER). Savings can be achieved by choosing an air conditioner that exceeds the minimum efficiency requirements.

The EER is the full load efficiency at specific operating conditions. It is possible that two units with the same SEER can have different EERs. In cooling climate zones of California, for two units with a given SEER, the unit with the higher EER is more effective in saving energy. Using the performance compliance method, credit is available for specifying an air conditioner with an EER greater than 10 (see the compliance program vendor's compliance supplement). When credit is taken for a high EER, field verification by a HERS rater is required (see Reference Residential Appendix RA3.4).

Air Handler Watt Draw

All the prescriptive packages require central forced air systems to install a fan that draws less than 0.58 watts/CFM. Performance compliance credit is available for demonstrating the installation of a high efficiency fan and duct system with a lower wattage fan than the prescriptive requirement. This credit can be achieved by selecting a unit with a high efficiency air handler fan and/or careful attention to efficient duct design. The performance compliance method allows the user's proposed fan power to be entered into the program, and credit will be earned if it is lower than the default of 0.58 watts per CFM of cooling coil airflow. To obtain this credit, the cooling coil airflow must meet the prescriptive requirements of at least 350 CFM/ton of nominal cooling capacity. After installation, the contractor must test the actual fan power of each system using the procedure in Reference Residential Appendix RA3.3, and show that it is equal or less than what was proposed in the compliance software analysis. For meet prescriptive compliance the cooling coil airflow criteria shall be 350 CFM/ton of nominal cooling capacity or greater. See §151(f)7B. The watt draw and airflow must also be verified by a HERS rater.

Cooling Coil Airflow

Adequate cooling coil airflow rates must be attained in order to deliver an air conditioner's maximum rated sensible capacity, total capacity, and efficiency. Low airflow rates can lead to ice buildup on the cooling coil and to compressor failure. §151(f)7Bi requires a prescriptive airflow rate of at least 350 CFM/ton of nominal cooling capacity. The performance approach offers a compliance credit for systems that can demonstrate a cooling coil airflow that exceeds 350 CFM/ton of nominal cooling capacity. The air handler must meet the prescriptive requirement for fan Watt draw of less than 0.58 w/CFM. The airflow for each system that must demonstrate compliance must be tested using one of the methods described in Reference Residential Appendix RA3.3. This compliance requires verification by a HERS rater.

Maximum Rated Total Cooling Capacity (MRTCC)

Compliance credit is available for cooling systems that have rated total cooling capacities that are less than the maximum rated total cooling capacity (MRTCC) criteria calculated by the Compliance Software for the proposed design as shown on the CF-1R. The installed equipment must be verified by a HERS rater to confirm compliance with the MRTCC criteria shown on the CF-1R. This compliance credit is available only in combination with the credits for duct sealing, and prescriptive cooling coil airflow.

The Electrical Input Exception for the MRTCC credit described in Reference Residential Appendix RA1.4 may be used to achieve the same compliance credit allowed for MRTCC. This exception allows compliance credit for equipment with rated total cooling capacity that exceeds the MRTCC criteria if the selected equipment does not use more power than the minimally compliant MRTCC equipment. Selection of EER values above the default 10 EER are used to attain compliance with this exception. An EER verification and MRTCC verification of the installation by a HERS rater is required if this electrical input exception is

claimed. Cooling coil airflow and duct sealing verification by a HERS rater is required.

The procedure for field verification of high EER equipment is described in Reference Residential Appendix RA3.4.4. The procedure consists of visual verification of installed equipment and confirmation that the installed equipment matches the equipment required to achieve the high EER rating based on the AHRI rating for the equipment. The procedures for duct leakage measurements are specified in Reference Residential Appendix RA3.1. The procedures for cooling coil airflow verification are specified in Reference Residential Appendix RA3.3.

4.4 Air Distribution Ducts and Plenums

Air distribution system performance can have a big impact on overall HVAC system efficiency; therefore, air distribution systems face a number of mandatory measures and prescriptive requirements. The prescriptive requirements say that air distribution ducts must be sealed and tested in all climate zones. There are also a number of compliance credits available related to duct system design.

Duct efficiency is affected by the following parameters:

- Duct location (attic, crawlspace, basement, inside conditioned space, or other),
- Specific conditions in the unconditioned space, e.g., presence of a radiant barrier,
- Duct insulation characteristics,
- Duct surface area, and
- Air leakage of the duct system

In performance calculations, duct efficiency can be calculated in one of two ways:

1. default input assumptions; or
2. diagnostic measurement values.

The computer program will use default assumptions for the proposed design when the user does not intend to make improvements in duct efficiency. There is a compliance penalty if the ducts are not sealed and tested.

4.4.1 Mandatory Measures

Minimum Insulation

§150(m)1

In all cases, unless ducts are enclosed entirely in conditioned space, the minimum allowed duct insulation value is R-4.2. Note that higher values may be required by the prescriptive requirements as described below.

§150(m)5

For the purpose of determining installed R-value of duct wrap, the installed thickness of insulation must be assumed to be 75 percent of the nominal thickness due to compression.

Connections and Closures

§150(m)1, §150(m)2, §150(m)3

The Standards set a number of mandatory measures related to duct connections and closures. These measures address both the materials used for duct sealing and the methods that may be used. Refer to the sections of the Standards listed above for details.

Connections between metal ducts and the inner core of flexible ducts must be mechanically fastened.

Factory-fabricated Duct Systems

Factory fabricated duct systems must comply with the following requirements:

- All factory-fabricated duct systems must comply with UL 181 for ducts and closure systems, including collars, connections, and splices, and be labeled as complying with UL 181. UL181 testing may be performed by UL laboratories or a laboratory approved by the Executive Director.
- All pressure-sensitive tapes, heat-activated tapes, and mastics used in the manufacture of rigid fiberglass ducts must comply with UL 181 and UL 181A.
- All pressure-sensitive tapes and mastics used with flexible ducts must comply with UL 181 and UL 181B.
- Joints and seams of duct systems and their components cannot be sealed with cloth back rubber adhesive duct tapes unless such tape is used in combination with mastic and draw bands: or
- It has on its backing the phrase "CEC approved," a drawing of a fitting to plenum joint in a red circle with a slash through it (the international symbol of prohibition), and a statement that it cannot be used to seal fitting to plenum and junction box joints.

Field-fabricated Duct Systems

Field –fabricated duct systems must comply with the following requirements:

- Factory-made rigid fiberglass and flexible ducts for field-fabricated duct systems must comply with UL 181.All pressure-sensitive tapes, mastics, aerosol sealants, or other closure systems used for installing field-fabricated duct systems shall meet the applicable requirements of UL 181, UL 181A, and UL 181B.
- Mastic sealants and mesh.
- Sealants must comply with the applicable requirements of UL 181, UL 181A, and/or UL 181B, and be nontoxic and water resistant.

- Sealants for interior applications must be tested in accordance with ASTM C731 and D2202.
- Sealants for exterior applications must be tested in accordance with ASTM C731, C732, and D 2202.
- Sealants and meshes must be rated for exterior use.
- Pressure-sensitive tape. Pressure-sensitive tapes must comply with the applicable requirements of UL 181, UL 181A, and UL 181B.
- Joints and seams of duct systems and their components must not be sealed with cloth back rubber adhesive duct tapes unless such tape is used in combination with mastic and draw bands: **or**
- It has on its backing the phrase "CEC approved," a drawing of a fitting to plenum joint in a red circle with a slash through it (the international symbol of prohibition), and a statement that it cannot be used to seal fitting to plenum and junction box joints.

Draw Bands Used With Flexible Duct

- Draw bands must be either stainless-steel worm-drive hose clamps or UV-resistant nylon duct ties.
- Draw bands must have a minimum tensile strength rating of 150 pounds.
- Draw bands must be tightened as recommended by the manufacturer with an adjustable tensioning tool.

Aerosol-sealant Closures

- Aerosol sealants shall meet the requirements of UL 723 and be applied according to manufacturer specifications.
- Tapes or mastics used in combination with aerosol sealing shall meet the requirements of this Section.

If mastic or tape is used to seal openings greater than 1/4 in., the combination of mastic and either mesh or tape must be used.

Building spaces such as cavities between walls, support platforms for air handlers, and plenums defined or constructed with materials other than sealed sheet metal, duct board, or flexible duct must not be used for conveying conditioned air including return air and supply air. The practice of using drywall materials as the interior surface of a return plenum is not allowed. Building cavities and support platforms may contain ducts. Ducts installed in cavities and support platforms must not be compressed to cause reductions in the cross sectional area of the ducts. Although a HERS rater may examine this as a part of his or her responsibilities when involved in a project, the enforcement of these minimum standards for ducts is the responsibility of the building official.

Example 4-1

Question

I am installing a fan coil in the hallway of a multifamily dwelling unit in a space constructed of sheetrock. The sheetrocked space is formed by the original hallway ceiling at the top, the hallway sidewalls, and sheetrock across the bottom of the space with a return grill mounted in the bottom sheetrock. Does a duct have to be installed connecting the fan coil return to the return register?

Answer

This type of installation may be used only when a fan-coil unit is installed in a sheetrocked space that is constructed and sealed to meet all applicable requirements in the California Building Code (CBC) Title 24, Part 2, Volume 1, Chapter 7 for fire-resistance-rated construction.

Also, §150(m) states as follows:

"Building cavities, support platforms for air handlers, and plenums defined or constructed with materials other than sealed sheet metal, duct board or flexible duct shall not be used for conveying conditioned air."

There are two acceptable methods of complying with §150 (m) for the fan coil space that is the subject of the question.

1. A return duct is installed between the fan coil and the return register.

2. If the builder demonstrates that the sheetrocked space in which the fan coil is installed is not a plenum, the duct in method "1" is not required.

The California Mechanical Code has the following definition of a plenum:

"PLENUM is an air compartment or chamber including uninhabited crawl spaces, areas above ceilings or below a floor, including air spaces below raised floors of computer/data processing centers, or attic spaces, to which one or more ducts are connected and which forms part of either the supply air, return air or exhaust air system, other than the occupied space being conditioned."

To demonstrate the sheetrocked space in which the fan coil is installed is not a plenum, the builder must demonstrate that it is part of the conditioned space. This fan coil space can be considered part of the conditioned space if it is demonstrated that the space

1. is within the building envelope, and

2. air leakage pathways (e.g., infiltration connections to building cavities) are sealed such that the space is more connected to the inside of the envelope than to outside the envelope.

There are two ways of demonstrating that air leakage pathways are properly sealed.

1. The easiest way is to construct the fan coil space so that an inspector is able to visually determine that the space has no leakage paths. No testing is required for this approach. The inspector must be able to inspect all joints and seams in the sheetrock, particularly horizontal seams that are above and below the sheetrocked bottom of the space, and to verify that no horizontal seams are behind the sheetrocked bottom or the mounting supports for the sheetrocked bottom of the space. The supports for the sheetrocked bottom must be mounted on the surface of the walls of the space and have sheetrock between the support and the wall framing.

Any horizontal seam in the wall-mounted sheetrock must be a minimum of ½ inch below the lower surface of the sheetrocked bottom. Also any horizontal seam in the wall of the space above the sheetrocked bottom must be a minimum of 1½ inches above the top of the mounting wood or metal brackets. This spacing is required to allow adequate room for taping the seam. All vertical sheetrock seams must be taped and sealed with joint compound or equivalent prior to the installation of the wood or metal brackets that support the dropped ceiling.

All penetrations of this space, for example refrigerant lines, water lines for hydronic heating, electrical (line and low voltage) lines, sprinkler lines, and ducts must be sealed with fire caulk or other approved sealing material as required by the building official.

Ductwork that penetrates the sheetrock must use a collar that goes entirely through the wall cavity. These collars must extend at least two inches past the sheetrock on each side of the wall cavity. The collars must then be sealed to the sheetrock on each side of the wall. The ducts must be attached and sealed to the collar.

2. The other way to demonstrate there is no air leakage pathway that is more connected to the outside than to the inside is to test the leakage of the sheetrocked space as though it were a duct. For this test, the space is sealed off and tested with duct pressurization equipment at a pressure of 25 Pa. If the tested leakage from this space is 10 ft^3/minute or less, then the space may be considered to have no substantial leakage to outside the conditioned space (effectively zero within the instrumentation accuracy). The results of this test must be reported to the building official. See the following three figures.

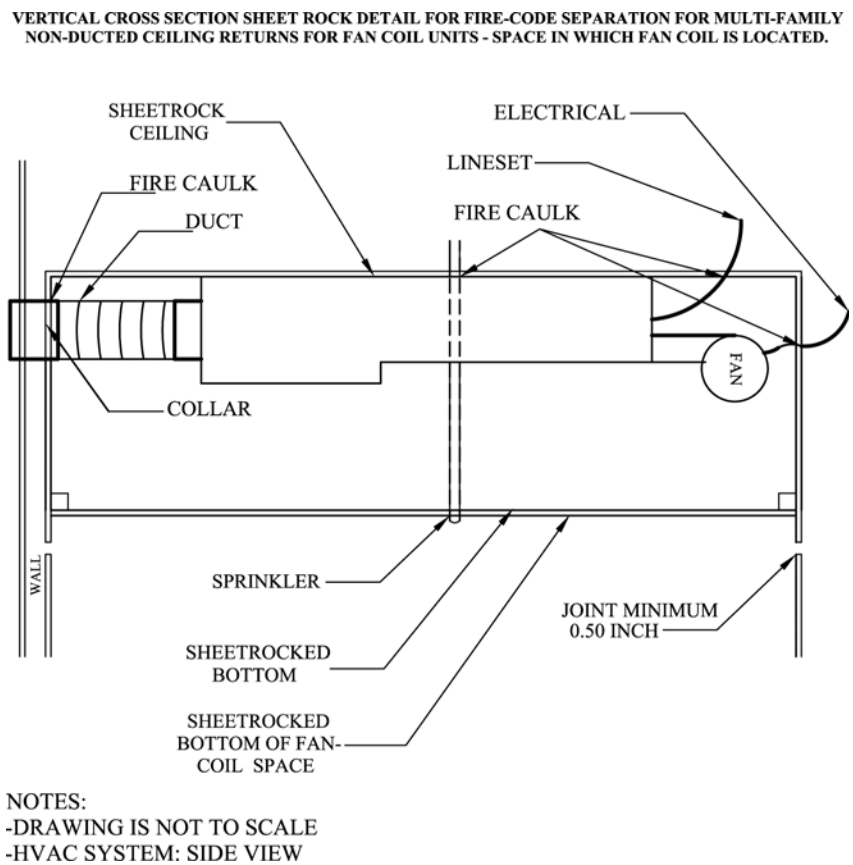

Figure 4-5 – Example of non-ducted ceiling returns for fan coil to meet fire code

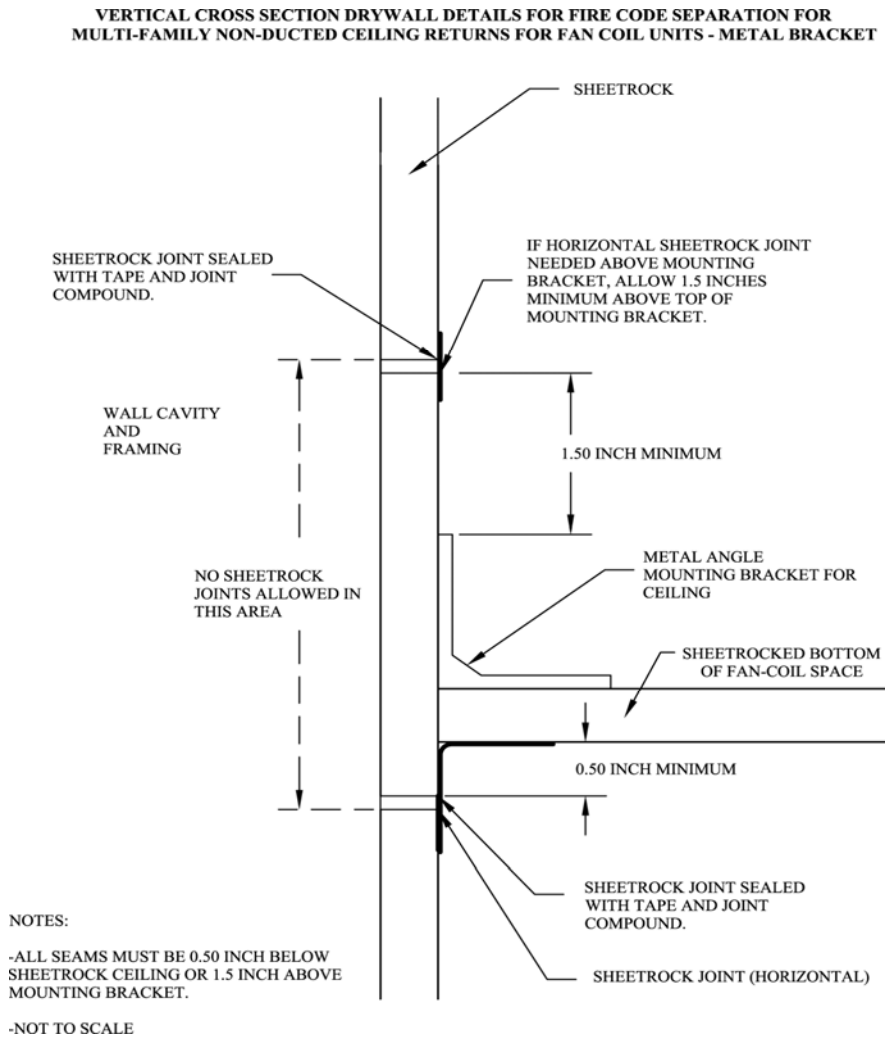

Figure 4-6 – Example of metal bracket support to meet fire code separation

§150(m)1 Exception to §150(m)1

Ducts and fans integral to a wood heater or fireplace are exempt from these insulation and installation requirements.

§150(m)2D, §150(m)3D

Duct systems may not use cloth-back, rubber-adhesive duct tape unless it is installed in combination with mastic and draw bands. The enforcement of these minimum standards is the responsibility of the building official.

Product Markings

§150(m)2A, §150(m)6

All factory-fabricated duct systems must meet UL 181 for ducts and closure systems and be labeled as complying with UL 181. Collars, connections and

splices are considered to be factory-fabricated duct systems and must meet the same requirement.

Insulated flexible duct products installed to meet this requirement must include labels, in maximum intervals of 3 ft, showing the R-value for the duct insulation (excluding air films, vapor barriers, or other duct components), based on the tests and thickness specified in §150(m).

Dampers to Prevent Air Leakage

§150(m)7

Fan systems that exhaust air from the building to the outside must be provided with back draft or automatic dampers.

§150(m)8

Gravity ventilating systems must have an automatic or readily accessible, manually operated damper in all openings to the outside, except combustion inlet and outlet air openings and elevator shaft vents. This includes clothes dryer exhaust vents when installed in conditioned space.

Protection of Insulation

§150(m)9

Insulation must be protected from damage, including that due to sunlight, moisture, equipment maintenance, and wind but not limited to the following: Insulation exposed to weather must be suitable for outdoor service; for example, protected by aluminum, sheet metal, painted canvas, or plastic cover. Cellular foam insulation shall be protected as above or painted with a coating that is water retardant and provides shielding from solar radiation that can cause degradation of the material.

Ducts in Concrete Slab

Ducts located in a concrete slab must have R-4.2 insulation, but other issues will come into play. If ducts are located in the soil beneath the slab or embedded in the slab, the insulation material should be designed and rated for such installation. Insulation installed in below-grade applications should resist moisture penetration (closed cell foam is one moisture-resistant product). Common pre-manufactured duct systems are not suitable for below-grade installations. If concrete is to be poured directly over the ducts, then the duct construction and insulation system should be sturdy enough to resist the pressure and not collapse. Insulation should be of a type that will not compress, or it should be located inside a rigid duct enclosure. The only time that common flex ducts are suitable in a below-grade application is when a channel is provided in the slab.

Indoor Air Quality and Mechanical Ventilation

§150(o)

See Section 4.6 of this chapter for details.

4.4.2 Prescriptive Requirements

Duct Insulation

§151(f)10

For Package C, the duct insulation requirement is R-8 in all climate zones. For Packages D& E, the requirement varies between R-4.2 and R-8.0 depending on climate zone. See Standards Tables 151-C & 151-D (reproduced in Appendix B of this document) for details.

Duct Leakage

§151(f)10

Duct sealing, including field verification and diagnostic testing, is required in all climate zones for all three prescriptive packages C, D and E. The details of the testing methods are covered in RA3.1 of the Reference Residential Appendix. The bottom line requirement for new duct systems is that leakage is less than 6 percent of the supply airflow. (Note that the requirement is slightly less stringent for testing of existing duct systems as described in Chapter 8 of this Compliance Manual, Additions and Alterations).

To comply with the duct-sealing requirement, the installer must first perform the tests and document the results in the applicable portion of the CF-6R form. In addition, a HERS rater must provide independent diagnostic testing and verification and then record the findings on the CF-4R form.

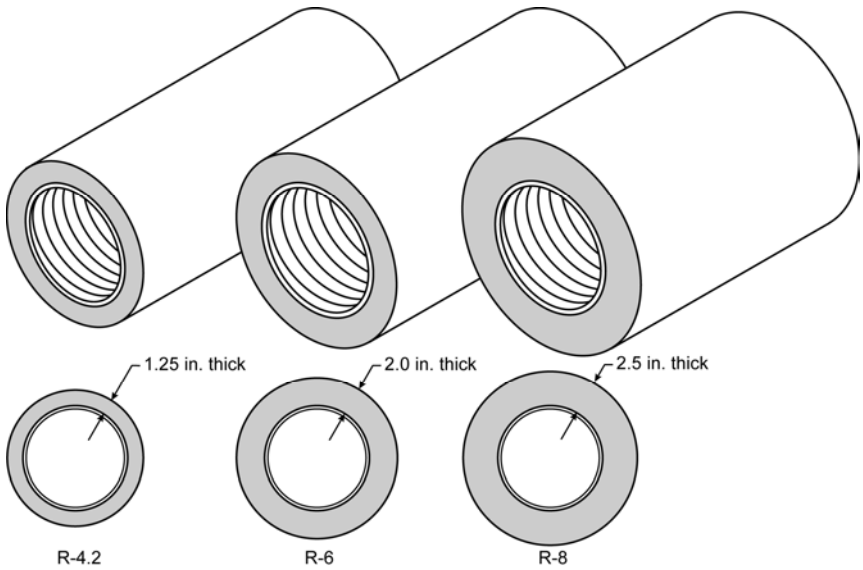

Figure 4-7 – R-4.2, R-6, and R-8 Ducts

The alternative to duct testing is to use the performance compliance method. In this case, the computer program will automatically assume that the standard design (baseline) has been tested and sealed, while the proposed design will default to a higher leakage value.

4.4.3 Compliance Options

The Standards provide credit for several compliance options related to duct design and construction. These options are described below along with some general duct construction guidelines.

Supply Duct Location

There are three ways to achieve credit for favorable duct location when using the performance compliance method.

First, credit is available if no more than 12 LF (linear feet) of supply duct are outside conditioned space. This total must include the air handler and plenum length. This credit results in a reduction of duct surface area in the computer compliance programs. This option requires certification by the installer and field verification by a HERS rater.

The second alternative applies when 100 percent of the supply ducts are located in either the crawlspace or the basement rather than in the attic. To achieve this credit, a duct layout must be included in the plans showing that all supply registers are located in the floor (or at least no more than 2 ft above the floor). The compliance software will include this measure on the Certificate of Compliance in the Special Features Inspection Checklist. This option does not require field verification by a HERS rater.

Third, credit for a high efficiency duct design is available through the Diagnostic Supply Duct Location, Surface Area, and R-value compliance option, which is described below. This option requires field verification of the duct design layout drawing(s) by a HERS rater. Verified duct design, when required, will be included in the HERS Required Verification list on the Certificate of Compliance (CF-1R).

There is no compliance credit provided for choosing a heating system such as a wall furnace, floor heater, or room heater even though those systems typically have no ducts. For these cases, the standard design in the compliance calculation uses the same type of system and also has no ducts. However, other systems, such as hydronic heating systems with a central heater or boiler and multiple terminal units, are considered central HVAC systems that are compared to a ducted system in the Standard Design. If the hydronic system has no ducts, there may be a significant energy credit through the performance method.

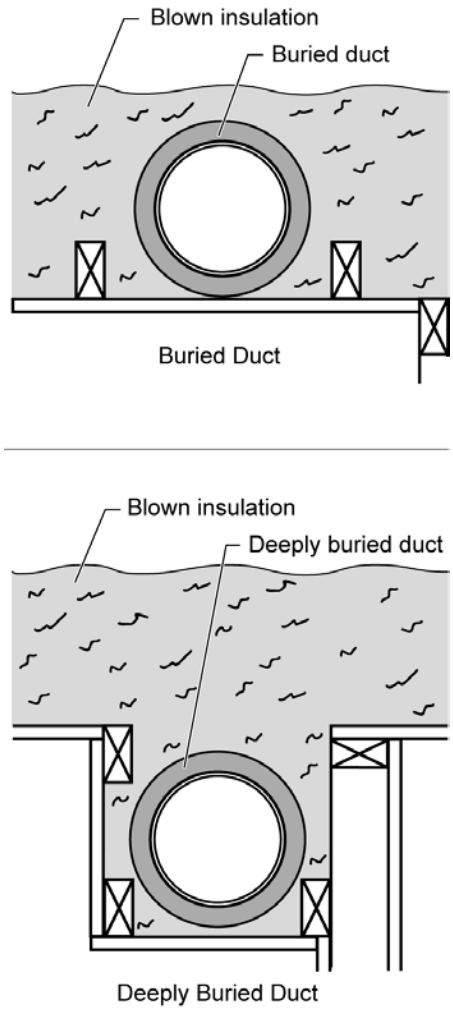

Figure 4-8 – Example: Buried Ducts on Ceiling and Deeply Buried Ducts

Duct Insulation

Performance credit is also available if all of the ducts are insulated to a level higher than required by the prescriptive package. If ducts with multiple R-values are installed, the lowest duct R-value must be used for the entire duct system. However, the air handler, plenum, connectors, and boots can be insulated to the mandatory minimum R-value.

As an alternative when there is a mix of duct insulation R-values, credit is available through the method described in the next section.

Diagnostic Supply Duct Location, Surface Area, and R-value

This compliance option allows the designer to take credit for a high efficiency duct design that incorporates duct system features that do not meet the criteria for the duct location and/or insulation compliance options described above. This method requires that the designer must enter the design characteristics of all supply ducts that are not located within conditioned space. The information required for the

input to the compliance software includes the length, diameter, insulation R-value, and location of all supply ducts. This method will result in a credit if the proposed duct system is better than the standard design, which exactly meets the prescriptive insulation requirement and has supply duct surface area set at 27 percent of floor area.

In order to claim this credit, the duct system design must be documented on plans that are submitted to the enforcement agency and posted at the construction site for use by the installation persons, the enforcement agency field inspector, and the HERS rater (Verified Duct Design). The duct system must be installed in accordance with the approved duct system plans, and the duct system installation must be certified by the installer on the CF-6R form and verified by a HERS rater on the CF-4R form. Details of this compliance option are described in Section 3.12.3 of the Residential ACM Manual, and verification procedures are described in RA3.1of the Reference Residential Appendix.

This compliance option also allows credit for the special case of ducts that are buried by blown attic insulation. For ducts that lie on the ceiling (or within 3.5 in. of the ceiling), the effective R-value is calculated based on the duct size and the depth of ceiling insulation as shown in Table R3-38 in the Residential ACM Manual. This case is referred to as Buried Ducts on the Ceiling. For the case of Deeply Buried Ducts, which are ducts that are enclosed in a lowered portion of the ceiling and completely covered by attic insulation, then the effective R-value allowance in the compliance calculations is R-25 when the attic insulation is fiberglass, and R-31 for cellulose attic insulation. In order to take credit for buried ducts, the system must meet the verified duct design criteria described above, be diagnostically tested for duct sealing compliance by a HERS rater according to Reference Residential Appendix RA3.1,and meet the requirements for high insulation installation quality described in Reference Residential Appendix RA3.5. Verified prescriptive cooling coil airflow is required when a measure is selected for compliance that has as a prerequisite a verified duct design.

Ducts in Attics with Radiant Barriers

Installation of a radiant barrier in the attic increases the duct efficiency by lowering attic summer temperatures. Compliance credit for radiant barriers requires listing of the radiant barrier in the Special Features and Modeling Assumptions to aid the local enforcement agency's inspections. Compliance credit for a radiant barrier does not require HERS rater verification.

4.4.4 Duct Installation Standards

The mandatory duct construction measures referenced in Section 4.4.1 above state that duct installations must comply with 2007 California Mechanical Code Sections 601, 602, 603, 604, 605, and the applicable requirements of the 2008 California Building Energy Efficiency Standards. Some of the highlights of these requirements are listed in this section along with some guidance for recommended quality construction practice.

Tapes and Clamps

All tapes and clamps must meet the requirements of §150 (m).

Cloth-back rubber-adhesive tapes must be used only in combination with mastic and draw bands, or it has on its backing the phrase "CEC approved," a drawing of a fitting to plenum joint in a red circle with a slash through it (the international symbol of prohibition), and a statement that it cannot be used to seal fitting to plenum and junction box joints.

All Joints Must Be Mechanically Fastened

For residential round metal ducts, installers must overlap the joint by at least 1½ in. and use three sheet metal screws equally spaced around the joint (see Figure 4-9).

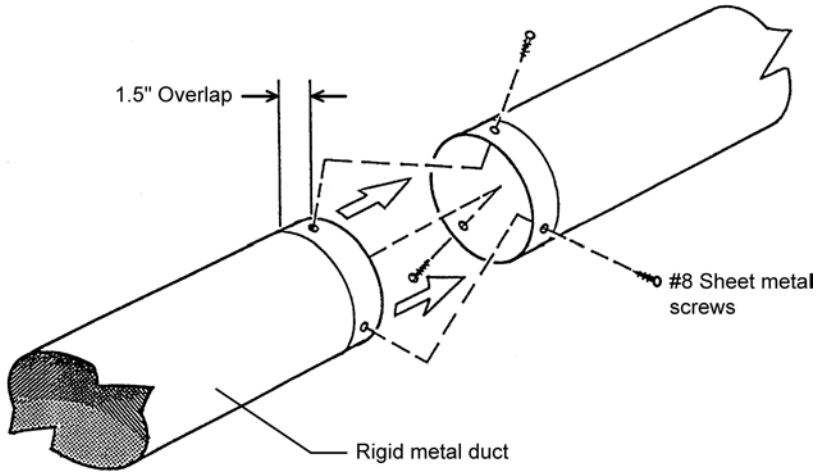

Source: Richard Heath & Associates/Pacific Gas & Electric

Figure 4-9 – Connecting Round Metallic Ducts

For round non-metallic flex ducts, installers must insert the core over the metal collar or fitting by at least 1 in. This connection may be completed with either mesh, mastic and a clamp, or two wraps of tape and a clamp.

For the mesh and mastic connection, the installer must first tighten the clamp over the overlapping section of the core, apply a coat of mastic covering both the metal collar and the core by at least 1 in., then firmly press the fiber mesh into the mastic and cover with a second coat of mastic over the fiber mesh (see Figure 4-10).

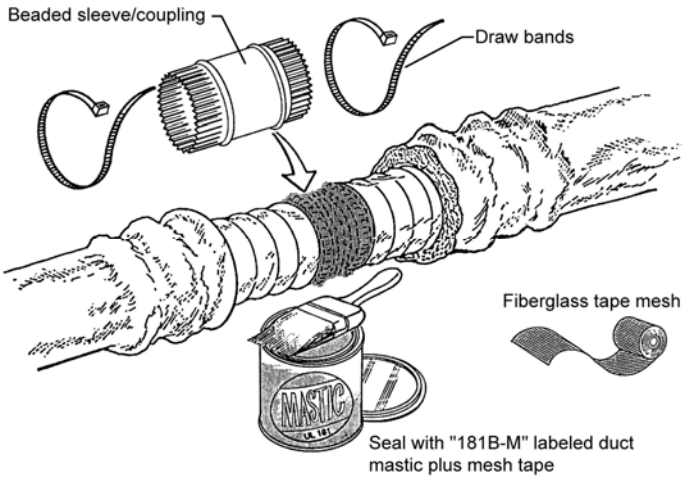

Source: Richard Heath & Associates/Pacific Gas & Electric

Figure 4-10 – Connecting Flex Ducts Using Mastic and Mesh

For the tape connection first apply at least two wraps of approved tape covering both the core and the metal collar by at least 1 in., then tighten the clamp over the overlapping section of the core (see Figure 4-11).

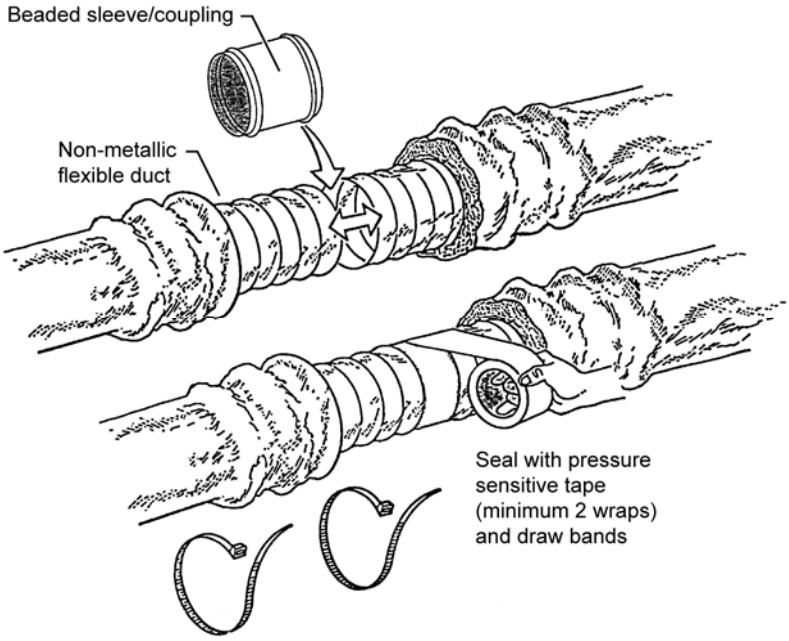

Source: Richard Heath & Associates/Pacific Gas & Electric

Figure 4-11 –Connecting Flex Ducts Using Tape and Clamps

All Joints Must Be Made Airtight (§150(m))

Seal with mastic, tape, aerosol sealant, or other duct-closure system that meets the applicable requirements of UL 181, UL 181A, UL 181B, or UL 723. Duct systems shall not use cloth-back, rubber-adhesive duct tape regardless of UL designation, unless it is installed in combination with mastic and clamps. The Energy Commission has approved three cloth-back duct tapes with special butyl

synthetic adhesives rather than rubber adhesive to seal flex duct to fittings. These tapes are:

- Polyken 558CA, Nashua 558CA, manufactured by Berry Plastics Tapes and Coatings Division and
- Shurtape PC 858CA, manufactured by Shurtape Technologies, Inc.

These tapes passed Lawrence Berkeley Laboratory tests comparable to those that cloth-back rubber-adhesive duct tapes failed (the LBNL test procedure has been adopted by the American Society of Testing and Materials as ASTM E2342-03). These tapes are allowed to be used to seal flex duct to fittings without being in combination with mastic. These tapes cannot be used to seal other duct system joints, such as the attachment of fittings to plenums and junction boxes. These tapes have on their backing a drawing of a fitting to plenum joint in a red circle with a slash through it (the international symbol of prohibition) to illustrate where they are not allowed to be used, and installation instructions in their packing boxes that explain how to install them on duct core to fittings and a statement that the tapes cannot be used to seal fitting to plenum and junction box joints.

Mastic and mesh should be used where round or oval ducts join flat or round plenums (see Figure 4-12).

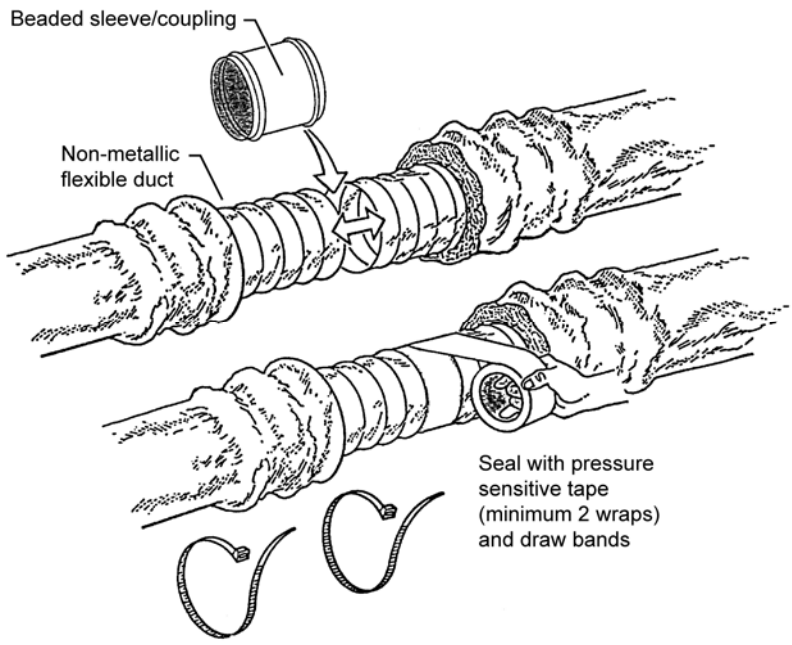

Source: Richard Heath & Associates/Pacific Gas & Electric

Figure 4-12 – Sealing Metallic Ducts with Mastic and Mesh

All ducts must be adequately supported.

Both rigid duct and flex duct may be supported on rigid building materials between ceiling joists or on ceiling joists.

For rigid round metal ducts that are suspended from above, hangers must occur 12 ft apart or less (see Figure 4-13).

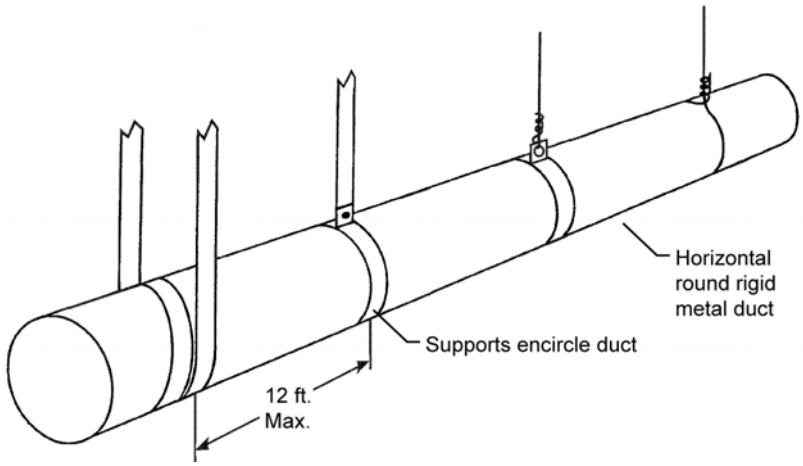

Source: Richard Heath & Associates/Pacific Gas & Electric

Figure 4-13 – Options for Suspending Rigid Round Metal Ducts

For rectangular metal ducts that are suspended from above, hangers must occur at a minimum of 4 ft to 10 ft depending on the size of the ducts (see Table 6-2-A in Appendix A of the 2007 California Mechanical Code). Refer to Figure 4-14.

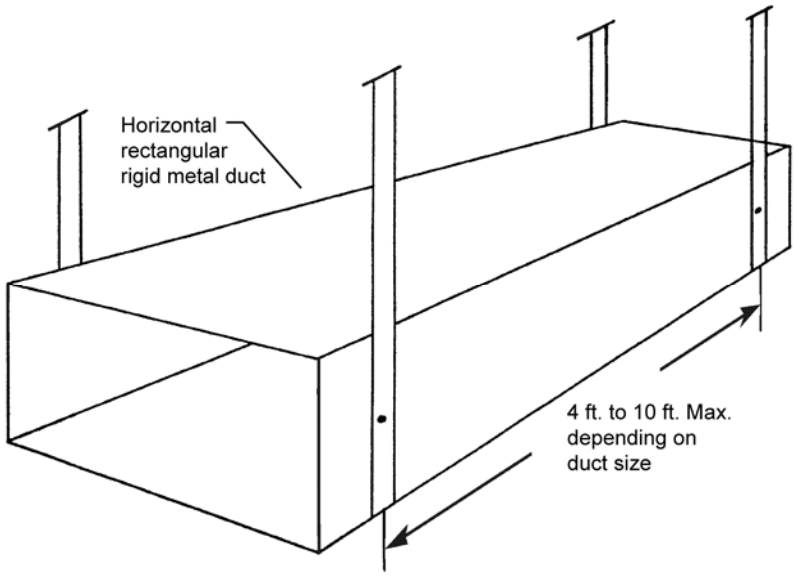

Source: Richard Heath & Associates/Pacific Gas & Electric

Figure 4-14 – Options for Suspending Rectangular Metal Ducts

For flex ducts that are suspended from above, hangers must occur at 4 ft apart or less and all fittings and accessories must be supported separately by hangers (see Figure 4-15).

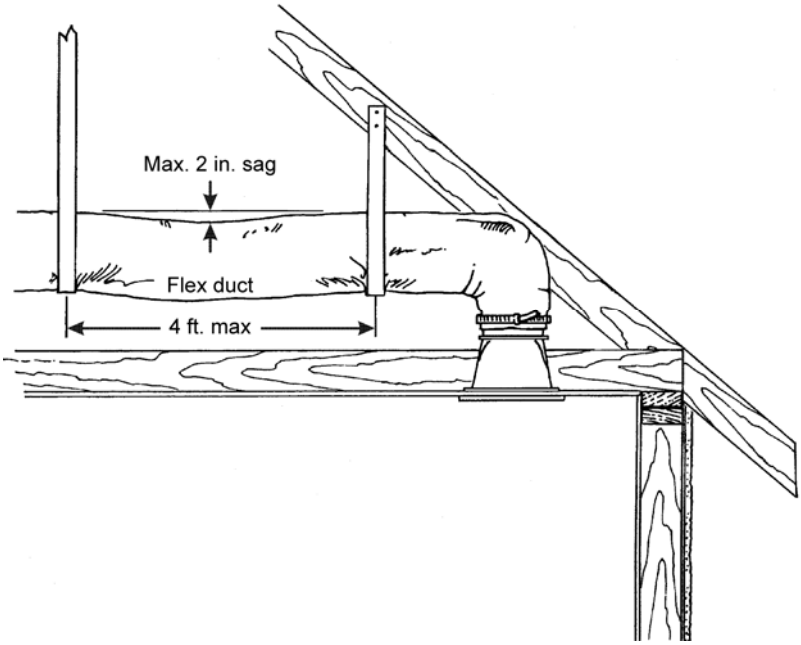

Source: Richard Heath & Associates/Pacific Gas & Electric

Figure 4-15 – Minimum Spacing for Suspended Flex Ducts

For vertical runs of flex duct, support must occur at 6 ft intervals or less (see Figure 4-16)

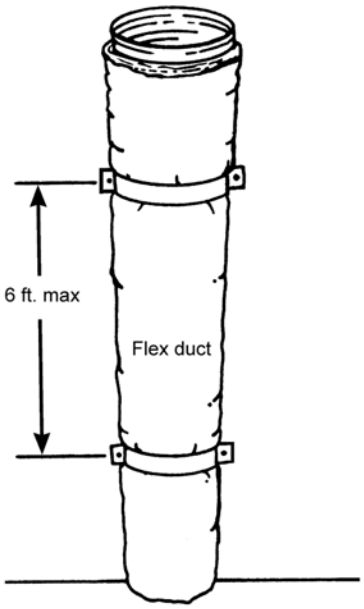

Source: Richard Heath & Associates/Pacific Gas & Electric

Figure 4-16 – Minimum Spacing for Supporting Vertical Flex Ducts

The routing and length of all duct systems can have significant impacts on system performance due to possible increased airflow resistance. The Energy Commission recommends using the minimum length of duct to make connections and the minimum possible number of turns.

For flexible duct, the Energy Commission recommends fully extending the duct by pulling the duct tight and cutting off any excess duct and avoiding bending ducts across sharp corners or compressing them to fit between framing members (see Figure 4-17). Also avoid incidental contact with metal fixtures, pipes, or conduits or installation of the duct near hot equipment such as furnaces, boilers, or steam pipes that are above the recommended flexible duct use temperature.

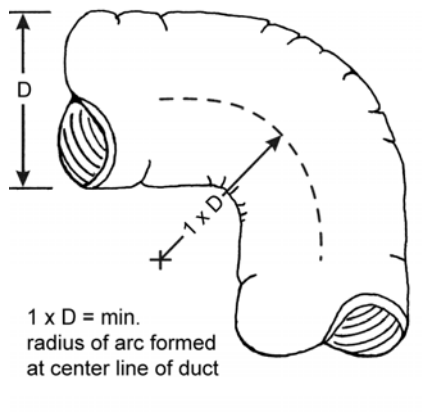

Source: Richard Heath & Associates/Pacific Gas & Electric

Figure 4-17 – Minimizing Radius for Flex Duct Bends

All joints between two sections of duct must be mechanically fastened and substantially airtight. For flex duct this must consist of a metal sleeve no less than 4 in. in length between the two sections of flex duct.

All joints must be properly insulated. For flex ducts this must consist of pulling the insulation and jacket back over the joint and using a clamp or two wraps of tape.

Aerosol sealant injection systems are an alternative that typically combines duct testing and duct sealing in one process. Figure 4-18 shows the computer-controlled injection fan temporarily connected to the supply duct. The plenum is blocked off by sheet metal to prevent sealant from entering the furnace. Supply air registers are also blocked temporarily to keep the sealant out of the house. Note that ducts must still be mechanically fastened even if an aerosol sealant system is used.

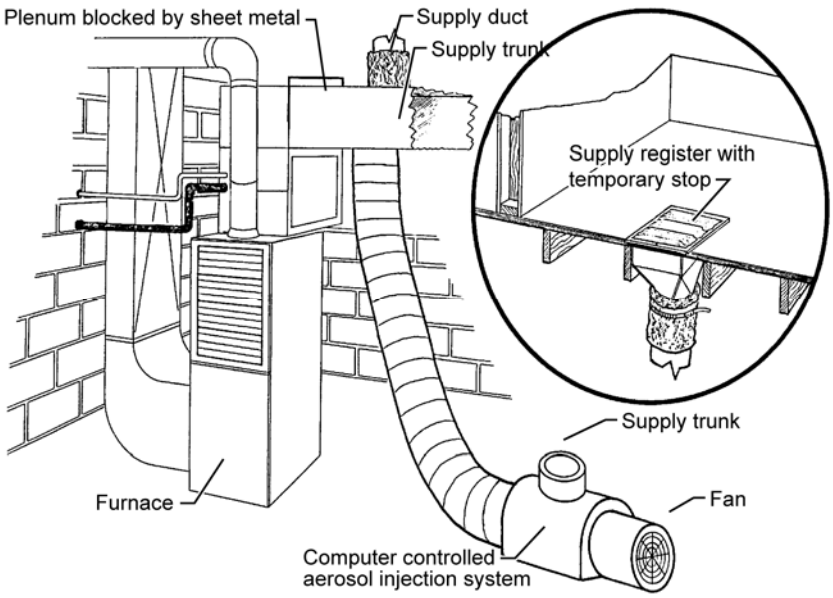

Source: Richard Heath & Associates/Pacific Gas & Electric

Figure 4-18 – Computer-Controlled Aerosol Injection System

4.5 Controls

4.5.1 Thermostats

Automatic setback thermostats can add both comfort and convenience to a home. Occupants can wake up to a warm house in the winter and come home to a cool house in the summer without using unnecessary energy.

§151(f)9

A thermostat is always required for central systems whether the prescriptive or performance compliance method is used. An exception is allowed only if:

(1) the building complied using a computer performance approach with a non-setback thermostat; and

(2) the system is one of the following non-central types:

- Non-central electric heaters
- Room air conditioners
- Room air conditioner heat pumps
- Gravity gas wall heaters
- Gravity floor heaters
- Gravity room heaters
- Wood stoves
- Fireplace or decorative gas appliances

When it is required, the setback thermostat must have a clock or other mechanism that allows the building occupant to schedule the heating and/or cooling set points for at least four periods over 24 hours.

If more than one piece of heating equipment is installed in a residence or dwelling unit, the set-back requirement may be met by controlling all heating units by one thermostat or by controlling each unit with a separate thermostat. Separate heating units may be provided with a separate on/off control capable of overriding the thermostat.

§112(b)

Note that thermostats for heat pumps must be "smart thermostats" that minimize the use of supplementary electric resistance heating during startup and recovery from setback, as discussed earlier in the heating equipment section.

Example 4-2

Question

Am I exempt from the requirement for a thermostat if I have a gravity wall heater or any of the equipment types listed in the exception to §112(c)?

Answer

The answer depends on the compliance approach. Under the prescriptive approach, Exception to §112(c) exempts gravity wall, floor and room heaters from the thermostat requirements. However, under the performance approach, the exception requires that "the resulting increase in energy use due to the elimination of the thermostat shall be factored into the compliance analysis". This means that under the performance scenario, if the building is modeled with a non-setback thermostat, any energy lost because of this will have to be made up using other efficiency features.

4.5.2 Zonal Control

An energy compliance credit is provided for zoned heating and air-conditioning systems, which save energy by providing selective conditioning for only the occupied areas of a house. A house having at least two zones (living and sleeping) may qualify for this compliance credit. The equipment may consist of one air-conditioning system for the living areas and another system for sleeping areas or a single system with zoning capabilities, set to turn off the sleeping areas in the daytime and the living area unit at night (see Figure 4-19).

There are unique eligibility and installation requirements for zonal control to qualify under the Standards. The following steps must be taken for the building to show compliance with the Standards under this exceptional method:

- **Temperature Sensors**. Each thermal zone, including a living zone and a sleeping zone, must have individual air temperature sensors that provide accurate temperature readings of the typical condition in that zone.
- **Habitable Rooms**. Each habitable room in each zone must have a source of space heating and/or cooling (if zonal credit for cooling is desired) such as forced air supply registers or individual conditioning units. Bathrooms, laundry, halls and/or dressing rooms are not habitable rooms.

- **Non-closeable Openings**. The total non-closeable opening area (W) between adjacent living and sleeping thermal zones (i.e., halls, stairwells, and other openings) must be less than or equal to 40 ft². All remaining zonal boundary areas must be separated by permanent floor-to-ceiling walls and/or fully solid operable doors capable of restricting free air movement when in the closed position.

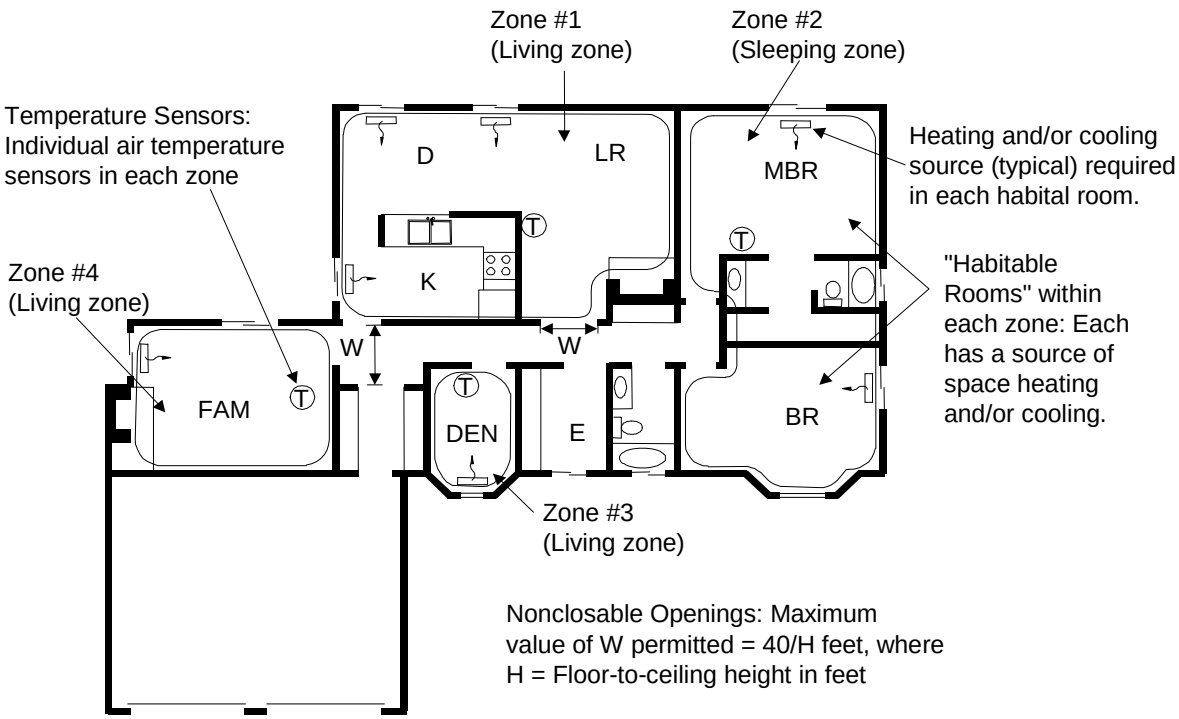

Figure 4-19– Zonal Control Example

- **Thermostats**. Each zone must be controlled by a central automatic dual setback thermostat that can control the conditioning equipment and maintain preset temperatures for varying time periods in each zone independent of the other.

Other requirements specific to forced air ducted systems include the following:

- Each zone must be served by a return air register located entirely within the zone. Return air dampers are not required.
- Supply air dampers must be manufactured and installed so that when they are closed, there is no measurable airflow at the registers.
- The system must be designed to operate within the equipment manufacturer's specifications.
- Air is to positively flow into, through, and out of a zone only when the zone is being conditioned. No measurable amount of supply air is to be discharged into unconditioned or unoccupied space in order to maintain proper airflow in the system.

Although multiple thermally distinct living and/or sleeping zones may exist in a residence, the correct way to model zonal control for credit requires only two zones: one living zone and one sleeping zone. All separate living zone components must be modeled as one single living zone, and the same must be done for sleeping zones.

Example 4-3

Question

In defining the living and sleeping zones for a home with a zonally-controlled HVAC system, can laundry rooms and bathrooms (which are not habitable spaces) be included on whichever zone they are most suited to geographically (e.g., a bathroom located near bedrooms)?

Answer

Yes. For computer modeling, include the square footage of any non-habitable or indirectly conditioned spaces, with the closest zone.

Example 4-4

Question

I have two HVAC systems and want to take zonal control credit. Can the return air grilles for both zones be located next to each other in the 5 ft wide by 9 ft high hallway (in the same zone)?

Answer

No. Because of the need to prevent mixing of air between the conditioned zone and the unconditioned zone, it is necessary to (1) have the return air for each zone within that zone, and (2) limit any non-closeable openings between the two zones to 40 ft² or less. Unless these criteria and the other criteria listed in this chapter can be met, credit for a zonally controlled system cannot be taken.

4.6 Indoor Air Quality and Mechanical Ventilation

§150(o) and 152(a)

As houses have been tightened up over the last twenty years due to energy cost concerns and the use of large sheet goods and housewrap, what used to be normal infiltration and exfiltration has been significantly reduced. In the meantime, we have introduced thousands of chemicals into our houses through building materials, cleaners, finishes, packaging, furniture, carpets, clothing and other products. The California Standards have always assumed adequate indoor air quality would be provided by a combination of infiltration and natural ventilation and that home occupants would open windows as necessary to make up any short fall in infiltration. However, Commission sponsored research on houses built under the 2001 Standards has revealed lower than expected overall ventilation rates, higher than expected indoor concentration of chemicals such as formaldehyde and many occupants who do not open windows regularly for ventilation. The 2008 update includes mandatory mechanical ventilation intended to improve indoor air quality in homes with low infiltration and natural ventilation rates.

This section addresses the requirements for mechanical ventilation. With the 2008 update, all low-rise residential buildings are required to have a whole house ventilation system and satisfy other requirements to achieve acceptable indoor air quality. The Energy Commission adopted the requirements of ASHRAE Standard

62.2-2007, except that opening and closing windows (although permitted by ASHRAE) is not an acceptable option in California.

The mechanical ventilation and indoor air quality requirements are mandatory measures. The applicable sections are §150(o) for new construction and §152(a) for additions.

Ventilation for Indoor Air Quality §150(o)

Ventilation for Indoor Air Quality. All dwelling units shall meet the requirements of ANSI/ASHRAE Standard 62.2. Window operation is not a permissible method of providing the Whole Building Ventilation required in Section 4 of that Standard.

Exception 5 to §152(a): Additions 1,000 ft^2 or less are exempt from the requirements of §150(o). For additions larger than 1,000 ft^2, application of §150(o) shall be based on the conditioned floor area of the entire dwelling unit, not just the addition.

The indoor air quality requirements are not triggered for renovations.

The following bullet points summarize the key requirements for most residences.

- A whole building mechanical ventilation system shall be provided. The typical solutions are described in the following section.
- Kitchens and bathrooms shall have local exhaust systems vented to the outdoors.
- Clothes dryers shall be vented to the outdoors.
- Miscellaneous indoor air quality design requirements apply, including:
- Ventilation air shall come from the out of doors and shall not be transferred from adjacent dwelling units, garages or crawlspaces.
- Ventilation system controls shall be labeled and the home owner shall be provided with instructions on how to operate the system.
- Combustion appliances shall be properly vented and air systems shall be designed to prevent back drafting.
- The wall and openings between the house and the garage shall be sealed.
- Habitable rooms shall have windows with a ventilation area of at least 4 percent of the floor area (see Section 3.5.2)
- Mechanical systems including heating and air conditioning systems that supply air to habitable spaces shall have MERV 6 filters or better.
- Air inlets (not exhaust) shall be located away from known contaminants.
- Air moving equipment used to meet either the whole building ventilation requirement or the local exhaust requirement shall be rated in terms of airflow and sound. Continuously operating fans shall be less than 1.0 sone, and intermittently operated fans shall be less than 3.0 sone. Remotely located equipment is accepted.

Reducing Pollutant Emissions from Interior Materials, Finishes, and Furnishings

The requirements of ASHRAE Standard 62.2-2007 focus on whole-building mechanical ventilation and local ventilation at known sources of pollutants or moisture such as kitchens, baths, and laundries. While not a requirement of the Standards, builders and home owners should select materials, finishes and furnishings that have no or low emissions of air pollutants, including formaldehyde and volatile organic compounds (VOCs).

Keeping air pollutants out of the building in the first place is more effective than flushing them out later through ventilation. Most building materials emit some level of VOCs, formaldehyde or other pollutants, and the resultant indoor pollutant exposures can pose a substantial risk for health effects such as cancer, asthma attacks, and irritation of the eyes, nose, and throat. Pollutant emissions are highest immediately after a new product is installed, but emissions may continue for days, weeks, months, or years. Build-up of air pollutants in the home is affected by ventilation, infiltration, and filtration rates which are the subjects of ASHRAE Standard 62.2-2007.

Choosing materials, finishes and furnishings with low pollutant emissions requires some research on the part of the builder or the homeowner. Testing is required to determine the level of pollutant emissions. To this end, the California Department of Public Health (CDPH) has developed a standardized test procedure for interior materials such as paints, adhesives, sealants, sealers, carpets, resilient flooring, furniture, and ceiling panels. Construction assemblies or systems are tested, e.g., resilient floor tile is tested with the required adhesive. Typically, a small sample of the product or material is tested (usually a 6 in. square), but the test procedure may also be applied to larger items such as chairs, desks and other furnishings.

The Collaborative for High Performance Schools (CHPS) maintains a database of materials that have been tested by third-party groups to the CDPH protocol or an equivalent protocol. The list includes materials that are safe to use in classrooms. While not designed for the specific application of residences where ventilation rates are lower than those in schools, the list provides guidance on which products have low emissions. See http://www.chps.net/manual/lem_table.htm for more information.

In addition, simple measures can be taken during construction to reduce the emissions of pollutants in a building before it is occupied. Such measures include pre-conditioning building materials and furnishings before installation, providing continuous exhaust ventilation once the materials are installed, and controlling dust buildup on interior surfaces and ductwork. CHPS has developed required measures of this type for classrooms, but these measures would also be effective in new homes with mechanical ventilation systems. The California Air Resources Board (ARB) also provides guidance for reducing indoor air pollution in homes. For more information, see:

- ARB Indoor Air Quality Guidelines, http://www.arb.ca.gov/research/indoor/guidelines.htm.
- CHPS 2009 Criteria (Volume III) at EQ.2.0.P3 et seq., http://www.chps.net/manual/.

4.6.1 Typical Solutions for Whole Building Ventilation

There are three generic solutions to meeting the outside air ventilation requirement:

1. Exhaust ventilation,
2. Supply ventilation, or a
3. Combination of supply and exhaust ventilation. If the supply and exhaust flows are within 10 percent of each other this is called a balanced ventilation system.

Whole building ventilation may be achieved through a single fan or a system of fans that are dedicated to this ventilation only. Or it may be carried out by fans that also provide local exhaust or distribute heating and cooling.

Exhaust Ventilation

Exhaust Ventilation is probably the most common solution. This is usually achieved by a quiet ceiling-mounted bath fan or remote-mounted inline or exterior-mounted fans. Air is drawn from the house by the exhaust fan and outdoor air enters the house through leaks in the building envelope. Because the leaks are generally uniformly scattered throughout the house, outdoor air entering the house does not generally create drafty or uncomfortable conditions.

Many high quality bath fans are available in the 30 to 150 cfm size range and are quiet enough to be used continuously. One or more fans of this size will meet the requirements of most homes. The exhaust fan can be a dedicated IAQ fan or it can be a more typical bath fan that is used for both whole building ventilation and local ventilation.

Inline fans, either single pickup or multipoint pickup, can be a very effective method of providing quiet exhaust ventilation from one or several bathrooms. As discussed above, inline fans can be located in the garage, attic, basement, or mechanical room. Exterior-mounted fans can be mounted on the exterior wall or on the roof. A sound rating is not required for remote or exterior fans as long as there is at least 4 ft of duct between the closest pickup grille and the fan.

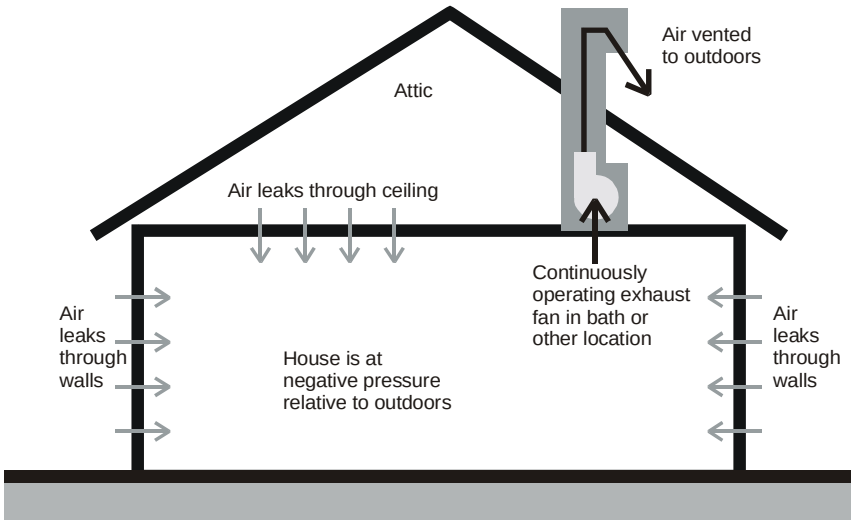

Figure 4-20 – Exhaust Ventilation Example

Supply Ventilation

***Central Fan-Integrated Ventilation System** is a central forced air heating and/or cooling system which is intended to operate on a regular basis to bring in outdoor ventilation air and/or distribute air around the home for comfort and ventilation even when heating and cooling are not needed.*

Supply ventilation works in just the opposite way as exhaust ventilation. Outside air enters the house through a dedicated supply fan or through the central HVAC system air handler. The fan(s) pressurizes the house and air escapes through leaks in the building envelope.

The air handler or supply fans can be located on the exterior of the house or dwelling unit or in the garage, attic, basement, or mechanical room. They can have a dedicated duct system or use the HVAC ducting.

The HVAC air handler can be used as a supply ventilation system with the addition of a direct duct connection to the return air duct from the outside and controls that ensure the air handler runs even when there is no heating or cooling required. This strategy, called a Central Fan Integrated Ventilation System (CFI), uses the negative pressure in the return plenum to pull in outdoor air and then push it through the air handler. Air handlers (furnaces) used in CFI ventilation systems are prescriptively required to meet the fan watt draw requirements in all climate zones. ASHRAE Standard 62.2 requires that the installer measure the ventilation flow rate induced to ensure that it meets the ventilation rate requirements under normal heating and cooling operating conditions.

Note for duct leakage testing: the outside air (OA) ducts for Central Fan Integrated (CFI) ventilation systems, shall not be sealed/taped off during duct leakage testing. CFI OA ducts that utilize controlled motorized dampers, that open only when OA ventilation is required to meet ASHRAE Standard 62.2, and close when OA ventilation is not required, may be configured to the closed position during duct leakage testing.

With the supply ventilation approach, the outdoor air inlet should be placed to avoid known areas of contaminants, such as the garage, barbeque areas, and chimneys.

If a dedicated fan is used, care must be taken to avoid introducing too much outdoor air into one location and creating uncomfortable conditions.

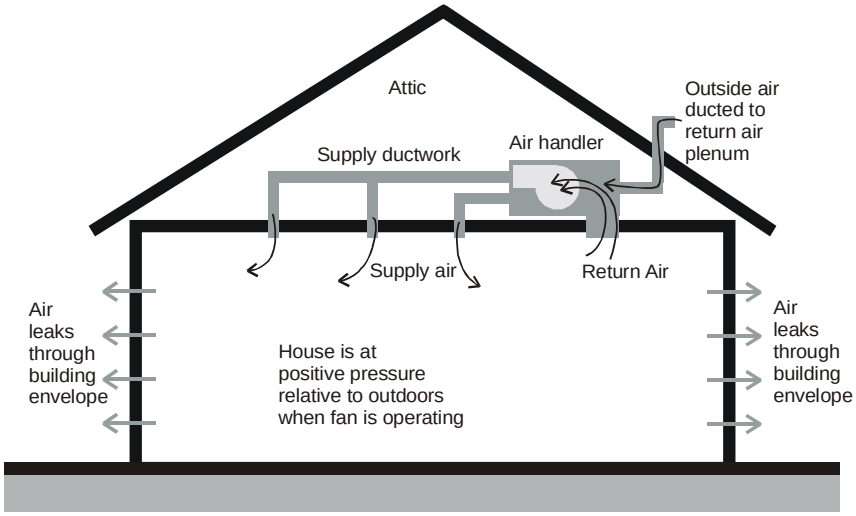

Figure 4-21 – Supply Ventilation Example

Combination Ventilation

Combination systems use both exhaust fans and supply fans. If both fans supply the same airflow the system is balanced and the house has a neutral pressure, as opposed to a supply ventilation system which results in a positive pressure or an exhaust ventilation system which results in a negative pressure.

Combination systems are often integrated devices, sometimes with a heat exchanger or heat recovery wheel. The supply and exhaust airstreams are typically of equal flow.

Combination systems can also consist of a mixture of supply fans and exhaust fans. It may be as simple as a quiet continuous bathroom exhaust fan matched to an outdoor air connection that introduces air into the return air plenum of a continuously-operating air handler.

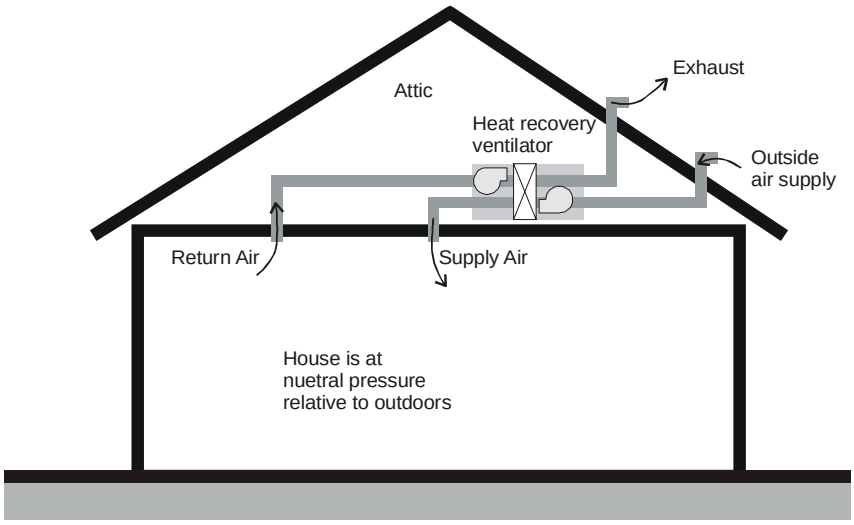

Figure 4-22 – Combination Ventilation Example

4.6.2 Ventilation Flow Rate (Chapter 4 of ASHRAE 62.2)

The ventilation system may operate continuously or intermittently. The base ventilation rate is determined for continuous ventilation and if the system is operated intermittently, an adjustment is made.

Continuous Ventilation

The continuous ventilation rate is 1 cfm for each 100 ft² of conditioned floor area (CFA) plus 7.5 cfm for each occupant. The number of occupants is approximated as the number of bedrooms plus one. For example, a three bedroom house is assumed to have four occupants. The required ventilation rate is give by the following equation.

Equation 4-1

$$\text{Ventilation Rate (cfm)} = \frac{\text{CFA}}{100} + 7.5 \times (\text{Number Bedrooms} + 1)$$

Instead of using one of the equations given above, Table 4-7 may be used to determine the required ventilation. This table allows the user to find the required ventilation rate directly if they know the floor area and number of bedrooms.

The size of the fan must be greater than or equal to the required capacity.

Table 4-7 – Continuous Ventilation Rate (cfm)

	Bedrooms				
Floor Area (ft²)	0-1	2-3	4-5	6-7	>7
≤1500	30	45	60	75	90
1501-3000	45	60	75	90	105
3001-4500	60	75	90	105	120
4501-6000	75	90	105	120	135
6001-7500	90	105	120	135	150
>7500	105	120	135	150	165

Example 4-5 – Required Ventilation

Question

What is the required continuous ventilation rate for a 3 bedroom, 1,800 ft² townhouse?

Answer

48 cfm. This is calculated as 1800/100 + (3+1)x7.5 = 48 cfm. Using Table 4-7, the required ventilation rate would be 60 cfm.

Example 4-6

Question

The house I am building has a floor area of 2,240 ft² and 3 bedrooms. My calculations come out to 52.4 cfm. Can I use a 50 cfm fan?

Answer

No, a 50 cfm fan does not meet the standard. You would need to select the next larger size fan, such as a unit rated at 55 cfm or 60 cfm. If you use Table 4-7 to select the fan size, you get 60 cfm.

Ventilation Rate for Combination Systems

When a combination ventilation system is used, meaning that both supply and exhaust fans are installed, the provided ventilation rate is the larger of the total supply airflow or the total exhaust airflow. The airflow rates of the supply and exhaust fans cannot be added together.

Example 4-7

Question

A 2,400 ft² house has exhaust fans running continuously in two bathrooms providing a total exhaust flow rate of 40 cfm, but the requirement is 60 cfm. What are the options for providing the required 60 cfm?

Answer

The required 60 cfm could be provided either by increasing the exhaust flow by 20 cfm or by adding a ventilation system that blows 60 cfm of outdoor air into the building. It cannot be achieved by using a make-up air fan blowing 20 cfm into the house.

Intermittent Ventilation

In some cases, it may be desirable to design a ventilation system that operates intermittently. The most common example of intermittent ventilation is when outside air is ducted to the return plenum and the central HVAC fan is used to provide ventilation.

This type of ventilation is permitted as long as the ventilation airflow is increased to respond to the fewer hours of fan operation. The increased flow depends on the fraction of time the fans operate. Figure 4-23 shows the multiplier based on the total hours per day of fan operation. There is very little need to increase fan flow when the fans operate for more than about 20 hours per day. However, the required flow rate can be 10 to 20 times greater when the fans operate for less than 6 hours per day.

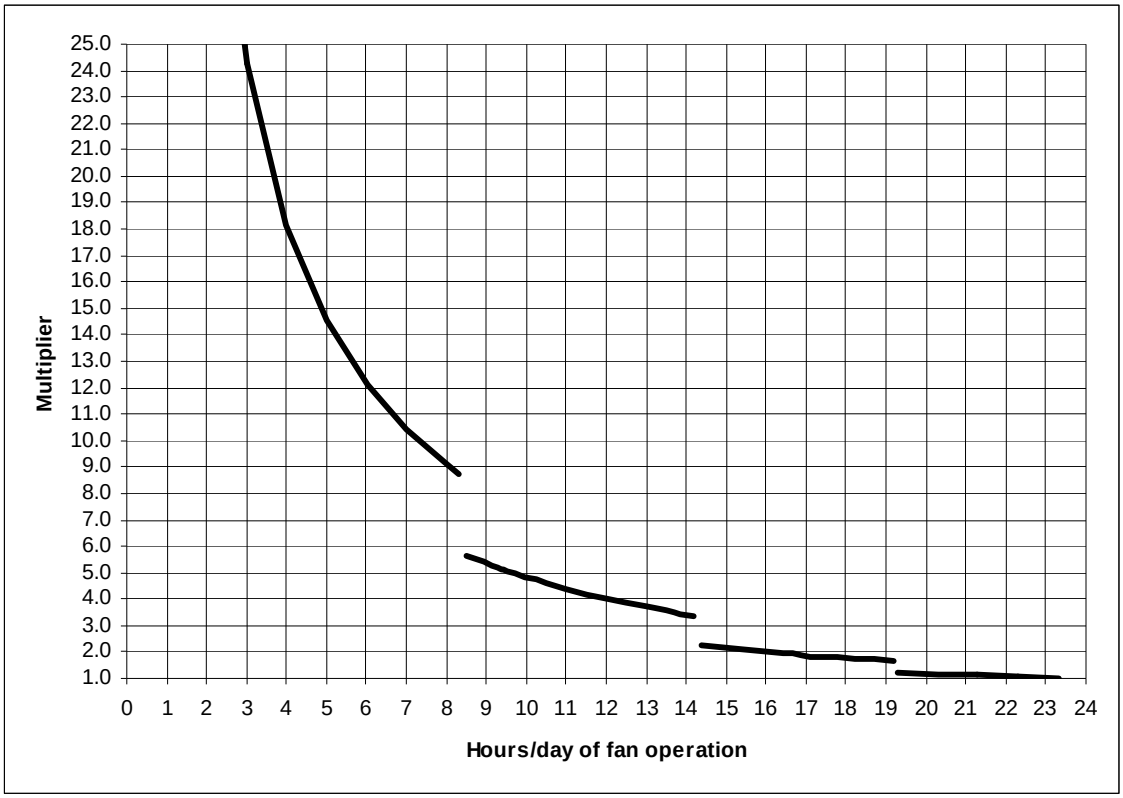

Figure 4-23 – Additional Air Flow for Intermittent Fan Operation

The multipliers in Figure 4-23 are determined from the following equation, which can be used in lieu of the graph.

Equation 4-2

$Q_f = Q_r / (e \times f)$

Where

Q_f = fan flow rate
Q_r = ventilation air requirement (continuous)
e = ventilation effectiveness (from Table 4-8 below)
f = fractional on-time.

Table 4-8 – Ventilation Effectiveness for Intermittent Fans **Daily Fractional On time, f**	**Ventilation Effectiveness, e**
f <= 35%	0.33
35% <= f < 60%	0.50
60% <= f < 80%	0.75
80% <= f	1.0
Fan runs at least once every three hours	1.0

Intermittent ventilation systems have to be automatically controlled by a timer or other device that assures that they will operate the minimum amount of time needed to meet the ventilation requirement. The automatic controls shall make sure that the fan operates at least 1 hour in twelve.

Example 4-8 – Flowrate for Intermittent Fan

Question

The required ventilation rate is 60 cfm. If the ventilation fan runs 80 percent of the time, what must the airflow rate be?

Answer

Since f is 0.8 (80 percent), then the ventilation effectiveness, e, is 1. Q_f equals 60/(0.8 x 1) = 75 cfm. This is a fairly small increase in fan size.

Example 4-9

Question

For the same house, if the fan runs half the day (12 hours per day), what is the required airflow?

Answer

The fractional on-time is 0.5 (50 percent), so e is also 0.5 from Table 4-8. The fan size, Q_f = 60/(0.5 x 0.5) = 240 cfm. This is a much larger increase in fan size.

Example 4-10

Question

For an apartment, the flow required is 45 cfm. If the ventilation fan runs 20 minutes on and 10 minutes off, what is the required fan size?

Answer

Fractional on-time is 0.67 (67 percent). [f = on-time/total time = 20/(20 + 10)] Since the fan runs at least once every three hours, e is 1.0. The fan size, Q_f = 45/(0.67 x 1.0) = 67.1 cfm, which rounds to 68 cfm.

Example 4-11

Question

For the same apartment, if the fan runs 8 hours on and 4 hours off, what flow rate is required?

Answer

Fractional on-time is again 0.67 (67 percent, but now e is 0.75. Q_f = 45/(0.67 x 0.75) = 89.6 cfm, rounded to 90 cfm.

Example 4-12

Question

I have an electronic timer system. I would like to have the system run only 2 hours in the morning and 8 hours in the evening (6 a.m. – 8 a.m. and 4 p.m. to midnight). I can set the timer to operate the fan for 1 minute every hour. What flow rate do I need?

Answer

Forget about the 1 minute every hour. ASHRAE has issued an interpretation of the standard that says that operation such as you describe is not sufficient to use a ventilation effectiveness of 1. In this case, the fractional on-time is 0.42 (10 hours/24 hours), so ventilation effectiveness from Table 4-8 is 0.5. Q_f = 60 cfm/(0.42 x 0.5) = 286 cfm.

Control and Operation

From ASHRAE 62.2-2007

Section 4.3 Control and Operation

The "fan on" switch on a heating or air-conditioning system shall be permitted as an operational control for systems introducing ventilation air through a duct to the return side of an HVAC system. Readily accessible override control must be provided to the occupant. Local exhaust fan switches and "fan on" switches shall be permitted as override controls. Controls, including the "fan-on" switch of a conditioning system, must be appropriately labeled.

Exception to Section 4.3: An intermittently operating, whole-house mechanical ventilation system may be used if the ventilation rate is adjusted according to the exception to §4.4. The system must be designed so that it can operate automatically based on a timer. The intermittent mechanical ventilation system must operate at least one hour out of every twelve.

The Standards require that the ventilation system have an override control which is readily accessible to the occupants. The "fan-on" switch on a typical thermostat controlling the HVAC system and the wall switch for an exhaust fan are both allowed as acceptable controls. The control must be "readily accessible", e.g. it must be capable of being accessed quickly and easily without having to remove panels or doors. It can be as simple as a labeled wall switch by the electrical panel. It may be integrated in a labeled wall-mounted control or in the air moving device that requires the removal of the cover plate, but it cannot be buried in the insulation in the attic or the inside of the fan. The occupant must be able to modify the settings or override the system.

If intermittent fans are used, they must be controlled by a timer, and they must have an increased airflow rate to compensate for the off time.

Time-of-day timers or duty cycle timers can be used to provide intermittent whole building ventilation. Manual crank timers cannot be used, since the system must operate automatically without intervention by the occupant. Some controls "look back" over a set time interval to see if the air handler has already operated for heating or cooling before it turns on the air handler for ventilation only operation.

Example 4-13 – Control Options

Question

I plan to use a bathroom exhaust fan to provide the ventilation for a house. The fan is designed to be operated by a typical wall switch. Do I need to put a label on the wall plate to comply with the requirement that controls be “appropriately labeled”?

Answer

Yes. If the exhaust fan were serving only the local exhaust requirement for the bathroom, then a label would not be required. Since the fan is providing whole house ventilation, a label is needed to inform the occupant of that.

Example 4-14 – Thermostatic Control

Question

I plan to provide ventilation air by a duct from the return side of the central air handler to the outdoors. Ventilation will be provided whenever the air handler operates. According to my estimates, the system will run on calls for heating and cooling about 40 percent of the time, averaged over the year. If I provide a safety factor and assume that it only runs 25 percent of the time, and size the airflow accordingly, can I allow the system to run under thermostatic control?

Answer

No. A system under thermostatic control will go through periods with little or no operation when the outdoor temperature is near the indoor setpoint, or if the system is in setback mode. An intermittently operating ventilation system MUST be controlled by a timer in order to assure that adequate ventilation is provided regardless of outdoor conditions.

As mentioned in the text, there are timer based controls available which keep track of when the system operates thermostatically, and only turn on the fan when it has not already operated enough to provide the desired ventilation.

4.6.3 Whole Building Mechanical Ventilation Energy Consumption

There are prescriptive standards for the electricity use of Central Fan Integrated (CFI) Ventilation Systems installed to meet the whole building ventilation requirement in any climate zone. The allowable electricity use of CFI systems depends on the fan flow rate in ventilation mode and the W/CFM limit is the same as the prescriptive requirement for cooling systems in certain climate zones. There are no prescriptive requirements for any other ventilation fan system.

For builders using the performance compliance approach the electricity use of fans (other than CFI fans) installed to meet the whole building ventilation requirement is usually not an issue because the Standard Design W/CFM is set equal to the proposed W/CFM up to a level intended to allow all well designed ventilation systems. The standard design whole building ventilation CFM is also set equal to the proposed ventilation system ventilation CFM so there will be no energy penalty or credit for most systems. Systems using Heat Recovery or Energy Recovery ventilators (HR/ERV)may need to account for the heat recovery benefit in the performance calculation to make up for their high energy use.

Energy use of fans installed for other purposes such as local exhaust is not regulated in the Standards.

Central Fan Integrated Ventilation Systems

§151(f)11. ***Central Fan Integrated Ventilation Systems****. Central forced air system fans used in central fan integrated ventilation systems shall demonstrate, in Air Distribution Mode, a watt draw less than 0.58 W/CFM.*

CFI systems must operate the furnace fan (generally part of every hour of the year) to draw in and/or distribute ventilation air around the home even when there is no heating or cooling required. Systems which do not operate regularly do not meet the mandatory requirement that ventilation be "continuous." Because this ventilation control increases the furnace fan run time significantly and because typical furnace fan and duct systems require a large amount of power a CFI system can use a very significant amount of electricity on an annual basis. The 2008 update includes prescriptive standards for furnace fan Watt draw for cooling systems in the hottest California climates. The same requirement also applies to CFI systems installed in any climate. Compliance with this requirement involves a post construction measurement of the airflow through the furnace and the simultaneous watt draw of the furnace fan motor by the contractor which must be verified by a HERS rater (see Reference Residential Appendix RA3.3 Field Verification and Diagnostic Testing of Forced Air System Fan Flow and Air Handler Fan Watt Draw). The system must be operating in ventilation mode and the airflow is the entire airflow through the furnace, even if all or most of the air is return from indoors. To pass the test the watt draw must be less than 0.58 W/CFM.

Builders who comply using the performance approach have the option of accepting the default (which does not require a post construction measurement) of ventilation flow equal to the cooling airflow and 0.8 W/CFM or specifying any other ventilation airflow and W/CFM which must be tested and verified. In either case the compliance software will check the furnace fan heating and cooling operation every hour and if the fan has not been on for at least 20 minutes will operate in CFI mode until 20 minutes of fan operating occurs. The standard design ventilation energy consumption is its extra fan run time at 0.58 W/CFM. The proposed design ventilation energy is its extra fan run time at the specified or default W/CFM.

Other Whole Building Ventilation Systems

There are no prescriptive requirements for other whole building ventilation systems fan energy.

Builders who comply using the performance approach have the option of accepting the default ventilation flow at the minimum CFM and a W/CFM of 0.25 which is typical of simple exhaust fans which meet the 1 Sone requirements. If the builder installs a whole building ventilation systems with an electrical consumption greater than 1.2 W/CFM of ventilation flow then he must input the ventilation CFM and W/CFM that he proposes. The compliance software will simulate whole building ventilation using the builder's specified ventilation CFM and W/CFM for the proposed design. For the standard design the builders proposed CFM and 1.2 W/CFM will be used. If the builder specifies a system with heat recovery he inputs the recovery efficiency of his proposed system and the compliance software uses it in the proposed design to calculate the heating and cooling impact of whole building ventilation. Ventilation heat recovery is never used in the standard design.

4.6.4 Local Exhaust (Chapter 5 of ASHRAE 62.2)

Local exhaust (sometimes called spot ventilation) has long been required for bathrooms and kitchens to deal with moisture and odors at the source. Building codes have required an operable window or an exhaust fan in baths for many years and have generally required kitchen exhaust either directly through a fan or indirectly through a ventless range hood and an operable window. The Standards recognize the limitations of these indirect methods of providing ventilation to reduce moisture and odors and requires that these spaces be mechanically exhausted directly to outdoors even if windows are present. As we build tighter homes with more insulation, the relative humidity in the home has increased and the potential for condensation on cool or cold surfaces has increased as well. The presence of moisture condensation has been a leading cause of mold and mildew in both new and existing construction. The occurrence of asthma has also increased as the interior relative humidity has gotten higher. Therefore, it has become more important to remove the moisture from bathing and cooking right at the source.

The Standards require that each kitchen and bathroom have a local exhaust system installed. Usually this will mean an exhaust fan, although systems which provide exhaust from multiple rooms are allowed. The Standards define kitchens as any room containing cooking appliances and bathrooms are rooms containing a bathtub, shower, spa, or other similar source of moisture. Note that a room containing only a toilet is not required by the Standards to have mechanical exhaust; it assumes that there will be an adjacent bathroom which will have local exhaust.

The Standards allow the designer the choice of intermittent operation or continuous operation of the local exhaust ventilation system. The ventilation rates are different because the ventilation effectiveness is different for an intermittent fan than a continuous fan.

Building codes may require that fans used for kitchen range hood ventilation be safety-rated by UL or some other testing agency for the particular location and/or application. Typically, these requirements address the fire safety issues of fans placed within an area defined by a set of lines at 45° outward and upward from the cook top. Few “bath” fans will have this rating and cannot be used in this area of the kitchen ceiling.

Example 4-15 – Local Exhaust Required for Toilet

Question

I am building a house with 2½ baths. The half bath consists of a room with a toilet and sink. Is local exhaust required for the half bath?

Answer

No. Local exhaust is required only for bathrooms, which are defined by the Standards as rooms with a bathtub, shower, spa or some other similar source of moisture. This does not include a simple sink for occasional hand washing.

Example 4-16

Question

The master bath suite in a house has a bathroom with a shower, spa and sinks. The toilet is in a separate, adjacent room with a full door. Where do I need to install local exhaust fans?

Answer

The Standards only requires local exhaust in the bathroom, not the separate toilet room.

Intermittent Local Exhaust

The Standards requires that intermittent exhaust fans be designed to be operated by the occupant. This usually means that a wall switch or some other type of control is accessible and obvious. There is no requirement on where the control or switch needs to be located, but bath fan controls are generally located next to the light switch and range hood or downdraft fan controls are generally integrated into the hood or mounted on the wall or counter.

Bathrooms can use a variety of exhaust strategies. They can have typical ceiling bath fans or just one or two pickups for remote inline or exterior-mounted fans or heat recovery products. They can be integrated with the whole building ventilation system to provide both functions. Kitchens can have range hoods, down-draft exhausts, ceiling fans, wall fans, or pickups for remote inline or exterior-mounted fans. Generally, HVR/ERV manufacturers will not allow kitchen pickups to avoid the issue of grease buildup in the heat exchange core. Building codes typically require that the kitchen exhaust must be exhausted through metal ductwork for fire safety.

Example 4-17 – Ducting Kitchen Exhaust to the Outdoors

Question

How do I know what kind of duct I need to use. I’ve been using recirculating hoods my entire career, now I need to vent to outdoors. How do I do it?

Answer

Kitchen range hood or downdraft duct is generally smooth metal duct that is sized to match the outlet of the ventilation device. It is often six inch or seven inch round duct or the range hood may have a rectangular discharge. If it is rectangular, the fan will typically have a rectangular-to-round adapter included. Always use a terminal device on the roof or wall that is sized to be at least as large as the duct. Try to minimize the number of elbows used.

Example 4-18

Question

How do I know what the requirements are in my area?

Answer

Ask your enforcement agency for that information. Some enforcement agency will accept metal flex, some will not.

Control and Operation

The choice of control is left to the designer. It can be an automatic control like an occupancy sensor or a manual switch. Some products have multiple speeds and some switches have a delay-off function that continues the exhaust fan flow for a set time after the occupant leaves the bathroom. New control strategies continue to come to the market. The only requirement is that there is a control.

Ventilation Rate

A minimum flow of 100 cfm is required for the range hood and 50 cfm for the bath fan. The 100 cfm requirement for the range hood or microwave/hood combination is the minimum to adequately capture the moisture and other products of cooking and/or combustion. The kitchen exhaust requirement can also be met with either a ceiling or wall mounted exhaust fan or with a ducted fan or ducted ventilation system that provides at least 5 air changes of the kitchen volume per hour. Recirculating range hoods that do not exhaust pollutants to the outside cannot be used to meet the requirements of the ASHRAE Standard 62.2.

Most range hoods provide more than one speed, with the high speed at 150 cfm or more – sometimes much more. Range hoods are available that are rated for 1,000 or 1,500 cfm on high speed and are often specified when large commercial-style stoves are installed. Care must be taken to avoid backdrafting combustion appliances when large range hoods are used.

Example 4-19 – Is an Intermittent Range Hood Required?

Question

I am building a house with a kitchen that is 12 ft x 14 ft with a 10 ft ceiling. What size ceiling fan is required?

Answer

The kitchen volume is 12 ft x 14 ft x 10 ft = 1680 ft^3. 5 air changes is a flowrate of 1680 ft^3 x 5/ hr ÷ 60 min/hr = 140 cfm. So this kitchen must have a ceiling or wall fan of 140 cfm or a 100 cfm vented range hood.

Continuous Mechanical Local Exhaust

The Standards allow the designer to install a local exhaust system that operates continuously and automatically. This is generally done when the local exhaust ventilation system is combined with a continuous whole building ventilation system. For example, if the whole building exhaust is provided by a continuously operating exhaust fan located in the bathroom, this fan satisfies the local exhaust requirement for the bathroom. The continuous local exhaust may also be part of the continuous whole building ventilation system, such as a pickup for a remote fan or HRV/ERV system.

Continuously operating bathroom fans must operate at a minimum of 20 cfm and continuously operating kitchen fans must operate at 5 air changes per hour.

The requirement that a continuous kitchen exhaust have a capacity to provide 5 air changes per hour is due to the difficulty of a central exhaust to adequately remove contaminants released during cooking from kitchens which may be quite

large, have an open-plan design, or have high ceilings. The only way to avoid a vented kitchen hood is to have more than 5 air changes per hour of ventilation.

Example 4-20 – Continuous Kitchen Exhaust

Question

The kitchen in an apartment is 5 ft. by 10 ft., with an 8 ft ceiling. If a continuous ceiling mounted exhaust fan is used, what must the airflow be?

Answer

The kitchen volume is 5 ft x 10 ft x 8 ft = 400 ft^3. 5 air changes equates to 400 ft^3 x 5/hr ÷ 60 min/hr = 34 cfm.

Example 4-21

Question

A new house has an open-design 12 ftx18 ft ranch kitchen with 12 ft cathedral ceilings. What airflow rate will be required for a continuous exhaust fan?

Answer: The kitchen volume is 12 ft x 18 ft x 12 ft = 2592 ft^3. The airflow required is 2592 ft^3 x 5/hr ÷ 60 min/hr = 216 cfm.

4.6.5 Other Requirements (Chapter 6 of ASHRAE 62.2)

Transfer Air

From ASHRAE 62.2-2007

6.1 Transfer Air

Dwelling units shall be designed and constructed to provide ventilation air directly from the outdoors and not as transfer air from adjacent dwelling units or other spaces, such as garages, unconditioned crawl spaces, or unconditioned attics. Measures shall be taken to prevent air movement across envelope components separating attached, adjacent dwelling units, and between dwelling units and other spaces, both vertically and horizontally. Measures shall include sealing of common envelope components, pressure management, and use of airtight recessed lighting fixtures.

The Standard requires that the air used for ventilation purposes come from the outdoors. Air may not be drawn in as transfer air from other spaces that are outside the occupiable space of the dwelling unit. This is to prevent airborne pollutants originating in those other spaces from contaminating the dwelling unit. For example, drawing ventilation air from the garage could introduce VOCs, or pesticides into the indoor air. Drawing ventilation air from an unconditioned crawlspace could cause elevated allergen concentrations in the dwelling such as mold spores, or insect or rodent allergens. Likewise, drawing air from an adjacent dwelling could introduce unwanted contaminants such as cooking products or cigarette smoke.

In addition to designing the ventilation system to draw air from the outdoors, the standard also requires that measures be taken to prevent air movement between adjacent dwelling units and between the dwelling unit and other adjacent spaces, such as garages. The measures can include air sealing of envelope components,

pressure management and use of airtight recessed light fixtures. The measures must apply to adjacent units both above and below, as well as side by side.

Air sealing must include pathways in vertical components such as party walls and walls common to the unit and an attached garage; and in horizontal components such as floors and ceilings. Pipe and electrical penetrations are examples of pathways that require sealing.

Instructions and Labeling

From ASHRAE 62.2-2007

6.2 Instructions and Labeling

Information on the ventilation design and/or ventilation systems installed, instructions on their proper operation to meet the requirements of this standard, and instructions detailing any required maintenance (similar to that provided for HVAC systems) shall be provided to the owner and the occupant of the dwelling unit. Controls shall be labeled as to their function (unless that function is obvious, such as toilet exhaust fan switches).

There has been a history of ventilation systems that worked initially but failed due to lack of information for the occupant or lack of maintenance. So the standard requires that the installer or builder provide written information on the basic ventilation concept being used and the expected performance of the system. These instructions must include how to operate the system and what maintenance is required.

Because the concept of a designed whole building ventilation system may be new to a lot of occupants, the standard requires that ventilation system controls be labeled as to their function. No specific wording is mandated, but the wording needs to make clear what the control is for and the importance of operating the system. This may be as simple as “Ventilation Control” or might include wording such as “Operate whenever the house is in use” or “Keep on except when gone over 7 days”. If the system is designed to operate with a timer as an intermittent system, the labeling may need to be more complex. One acceptable option is to affix a label to the electrical panel that provides some basic system operation information.

Clothes Dryers

From ASHRAE 62.2-2007

6.3 Clothes Dryers

Clothes dryers shall be exhausted directly to the outdoors.

All laundry rooms must be built with a duct to the outdoors, designed to be connected to the dryer. Devices which allow the exhaust air to be diverted into the indoor space to provide extra heating are not permitted. This requirement is consistent with existing clothes dryer installation and design standards.

In multi-family buildings, multiple dryer exhaust ducts can be connected to a common exhaust only when dampers are provided to prevent recirculation of exhaust air from one apartment to another.

Example 4-22 – Clothes Dryer Exhaust Diverter

Question

I am building a home which has been purchased prior to completion. The buyer has asked for an exhaust air diverter to be installed in the dryer exhaust duct. He says that it is wasteful of heating energy to exhaust the warm humid air to the outdoors during the winter when the furnace and humidifier are working. He says that the screen on the diverter will prevent excess dust being released into the space. Can I install the device for him?

Answer

If you do, you will not comply with the Standards. The device is specifically prohibited. Significant amounts of dust are released from such devices, and the moisture in the dryer exhaust can lead to humidity problems as well, particularly in warmer climates.

Combustion and Solid-Fuel Burning Appliances

From ASHRAE 62.2-2007

6.4 Combustion and Solid-Fuel Burning Appliances

Combustion and solid-fuel burning appliances must be provided with adequate combustion and ventilation air and vented in accordance with manufacturer's installation instructions, NFPA 54-2002/ANSI Z223.1-2002, National Fuel Gas Code,3 NFPA 31-2001, Standard for the Installation of Oil-Burning Equipment, or NFPA 211-2000, Standard for Chimneys, Fireplaces, Vents, and Solid-Fuel Burning Appliances, or other equivalent code acceptable to the building official.

Where atmospherically vented combustion appliances or solid-fuel burning appliances are located inside the pressure boundary, the total net exhaust flow of the two largest exhaust fans (not including a summer cooling fan intended to be operated only when windows or other air inlets are open) shall not exceed 15 cfm/100 ft² of occupiable space when in operation at full capacity. If the designed total net flow exceeds this limit, the net exhaust flow must be reduced by reducing the exhaust flow or providing compensating outdoor airflow. Atmospherically vented combustion appliances do not include direct-vent appliances.

The Standard requires that the vent system for combustion appliances be properly installed, as specified by the instructions from the appliance manufacturer and by the California Building Code. Compliance with the venting requirements will involve determining the type of vent material to be used, the sizing of the vent system, and vent routing requirements.

The Standard includes a provision intended to prevent backdrafting where one or more large exhaust fans are installed in a home with atmospherically vented or solid fuel appliances. If the two largest exhaust fans have a combined capacity that exceeds 15 cfm/100 ft² of floor area then an electrically interlocked makeup air fan must be installed so that the net exhaust is less than 15 cfm/100 ft² with either or both fans operating. This provision applies only when the atmospherically vented appliance is inside the pressure boundary of the house, and does not include a summer cooling fan which is designed to be operated with the windows open. Direct-vent appliances are not considered "atmospherically vented."

The 2 largest exhaust fans are normally the kitchen range hood and the clothes dryer (if located inside the dwelling unit pressure boundary). Many large range hoods, particularly down draft range hoods, have capacities of 1,000 cfm or more.

A problem with this requirement can be solved in one of three ways. First, all atmospherically vented combustion appliances can be moved outside the pressure boundary of the house (to the garage or other similar space). Second, the flowrate of one or more of the fans can be reduced so that the combined flow is less than 15 cfm/100 ft². Finally, a supply fan can be installed to balance the flow.

Example 4-23 – Large Exhaust Fan

Question

I am building a custom home with 4 bedrooms and 3,600 ft^2. The kitchen will have a high end range hood which has three speeds, nominally 1000 cfm, 1400 cfm and 1600 cfm. The house will be heated with a gas furnace located in the basement. If I am using a central exhaust fan for the whole house ventilation of 90 cfm, and there is a clothes dryer installed, how large does my compensating supply fan need to be?

Answer

You must use the high speed value for the range hood of 1600 cfm. The clothes dryer will have a flow that is assumed to be 150 cfm for sizing purposes. These two flows must be added together for a total exhaust capacity of 1750 cfm. Since the whole house ventilation fan is not one of the two largest exhaust fans, it does not figure into sizing the supply fan. Using the equation above, the supply fan must be at least 1750 cfm – 15 cfm x 3600 ft² / 100 ft² = 1210 cfm.

Example 4-24

Question

The same custom house will have the furnace located in the garage instead of the basement. Does that change anything?

Answer

The garage and the attic would both normally be considered outside the pressure boundary, so no compensating fan would be required. An exception to this would be if the attic is specially designed to be inside the pressure boundary, then the answer would be the same as for Q1.

Example 4-25

Question

For this house, I need to keep the furnace in the basement. What are my options that would avoid using the compensating supply fan?

Answer

There are several things you could do. First, you could use direct vent appliances which would give higher efficiency and would not require a supply fan. You could use a lower capacity range hood, one that is less than 390 cfm (15 cfm x 3600 ft² / 100 ft² – 150 cfm). Use of supply only whole house ventilation would allow the hood capacity to increase to 480 cfm (15 cfm x 3600 ft² / 100 ft² – 150 cfm + 90 cfm). There are also range hoods available in the commercial market which have integrated supply fans (or makeup air), and one of these units would be acceptable too.

Garages

From ASHRAE 62.2-2007

6.5 Garages

When an occupiable space adjoins a garage, the design must prevent migration of contaminants to the adjoining occupiable space. Doors between garages and occupiable spaces shall be gasketed or made substantially airtight with weather stripping. HVAC systems that include air handlers or return ducts located in garages shall have total air leakage of no more than 6% of total fan flow when measured at 0.1 in. w.c. (25 Pa).

Garages often contain numerous sources of contaminants. These include gasoline and exhaust from vehicles, pesticides, paints and solvents, etc. The Standards require that when garages are attached to the house, these contaminants be prevented from entering the house. The wall between the unit and garage (or garage ceiling in designs with living space above garages) shall be designed and constructed so that no air migrates through the wall or ceiling. The common doors and any air handlers or ducts located in the garage shall also be sealed, weatherstripped or gasketed. Use of an exterior door system would address this requirement.

If an air handling unit (furnace) is located in the garage, or return ducts are located in the garage (regardless of the air handler location) the entire duct system must meet the sealed and tested ducts criteria.

Example 4-26 – Garages

Question

The building designer located the air handler in the garage. The main return trunk from the dwelling is connected to the air handler. Is this acceptable?

Answer

Yes, provided that the duct system is leak tested at 25 Pa. and sealed, if necessary, to have leakage no greater than 6 percent of the total fan flow.

Example 4-27

Question

The building designer located the air handler in the dwelling unit. A return duct runs through the garage to a bedroom above the garage. The duct has only 4 ft of length in the garage. How do I test that length of the duct?

Answer

This design is allowed but the entire duct system must be leak tested at 25 Pa. and sealed, if necessary, to have leakage no greater than 6 percent of the total fan flow. There is no test available to leak test only the garage portion of the duct system.

Ventilation Opening Area

From ASHRAE 62.2-2007

6.6 Ventilation Opening Area

Spaces shall have ventilation openings as listed below. Such openings shall meet the requirements of Section 6.8.

Exception: Spaces that meet the local ventilation requirements set for bathrooms in Section 5.

6.6.1 Habitable Spaces

Each habitable space shall be provided with ventilation openings with an openable area not less than 4% of the floor area, nor less than 5 ft².

6.6.2 Toilets and Utility Rooms

Toilets and utility rooms shall be provided with ventilation openings with an openable area not less than 4% of the room floor area, nor less than 1.5 ft².

Exceptions: (1) Utility rooms with a dryer exhaust duct; (2) toilet compartments in bathrooms.

The whole building mechanical ventilation is intended to provide adequate ventilation to typical new homes under normal circumstances. On occasion, however, houses experience unusual circumstances where high levels of contaminants are released into the space. When this occurs, some means of providing the significantly higher levels of ventilation required to remove the contaminants is needed. Operable windows are the most likely means of providing the additional ventilation.

This section of the standard require ventilation openings in habitable spaces, toilets and utility rooms. Ventilation openings usually will mean operable windows, although a dedicated non-window opening for ventilation is acceptable. Spaces that meet the local exhaust requirements are exempted from this requirement.

Habitable Spaces

Habitable spaces are required to have ventilation openings with openable area equal to at least 4 percent of the space floor area (but not less than 5 ft^2). Rooms people occupy are considered habitable space. Dining rooms, living rooms, family rooms, bedrooms and kitchens are considered habitable space. Closets, crawl spaces, garages and utility rooms are generally not. If the washer and dryer are located in an open basement that is also the family room, it would be considered habitable space.

The openings do not have to be provided by windows. They can also be provided by operable, insulated, weather-stripped panels.

Ventilation openings, which include windows, skylights, through-the-wall inlets, window air inlets, or similar devices, shall be readily accessible to the occupant. This means that the occupant must be able to operate the opening without having to climb on anything. An operable skylight must have some means of being operated while standing on the floor: a push rod, a long crank handle, or an electric motor.

If a ventilation opening is covered with louvers or otherwise obstructed, the openable area is the unobstructed free area through the opening.

Example 4-28 – Ventilation Openings

Question

I am building a house with a 14 ft. by 12 ft. bedroom. What size window do I need to install?

Answer

It depends on the type of window. The standard requires that the openable area of the window, not the window unit, be 4 percent of the floor area, or 14 ft x 12 ft' x 0.04 = 6.7 ft^2. The fully opened area of the window or windows must be greater than 6.7 ft^2. The requirement for this example can be met using two double hung windows each with a fully opened area of 3.35 ft^2. Any combination of windows whose opened areas add up to at least 6.7 ft^2 will meet the requirement.

Example 4-29 – Ventilation Opening Louvers

Question

There are fixed wooden louvers over a window in a bedroom. The louvers have slats that are 1/8 in thick, and they are spaced 1 in. apart. What is the reduction in openable area?

Answer

Assuming that the 1 inch spacing was measured perpendicular to the slats (the correct way), then the reduction is the slat thickness divided by the spacing, or 1/8 inch. So the credited opening area is the original opening area x (1 inch – 1/8 inch)/1 inch = 7/8 inch of the original opening area.

Minimum Filtration

From ASHRAE 62.2-2007

6.7 Minimum Filtration

Mechanical systems that supply air to an occupiable space through ductwork exceeding 10 ft in length and through a thermal conditioning component, except evaporative coolers, shall be provided with a filter having a designated minimum efficiency of MERV 6, or better, when tested in accordance with ANSI/ASHRAE Standard 52.2-1999, Method of Testing General Ventilation Air-Cleaning Devices for Removal Efficiency by Particle Size.7 The system shall be designed such that all recirculated and mechanically supplied outdoor air is filtered before passing through the thermal conditioning components. The filter shall be located and installed in such a manner as to facilitate access and regular service by the owner. The filter shall be selected and sized to operate at a clean pressure drop no greater than 0.1 in. w.c. unless the equipment is designed or selected to accommodate any additional pressure drop imposed by the filter selection.

The Standard requires that particulate air filtration of no less than MERV 6 efficiency is installed in any HVAC system having more than 10 ft of ductwork. The particulate filter must be installed such that all of the air circulated through the furnace or air handler is filtered prior to passing through the thermal conditioning portion of the system. In addition, the standard requires that the filter be located and installed for easy access and service by the homeowner. Lastly, the standard requires that the filter cartridge be sized to operate at no greater than 0.1 inch water column when clean, or that the air handler be selected to handle greater pressure loss without undue restriction on airflow.

Many residential units have factory installed filter cartridges that comply with this Standards. These are normally I inch thick with a pleated media configuration to

attain the proper efficiency and airflow performance. If the filter bank is to be field installed, the sizing selection is critical to HVAC system performance.

The filter retainer section must be easily accessible by the homeowner to assure continued monitoring and replacement. The filter bank may be located in the air handler/furnace (1); in the return air plenum near the air handler (2a); in the return air plenum with a deep pleat cartridge (2b); angled across the return air plenum to enhance cross-section (3); or situated in a wall return grille (4). See Figure 4-24.

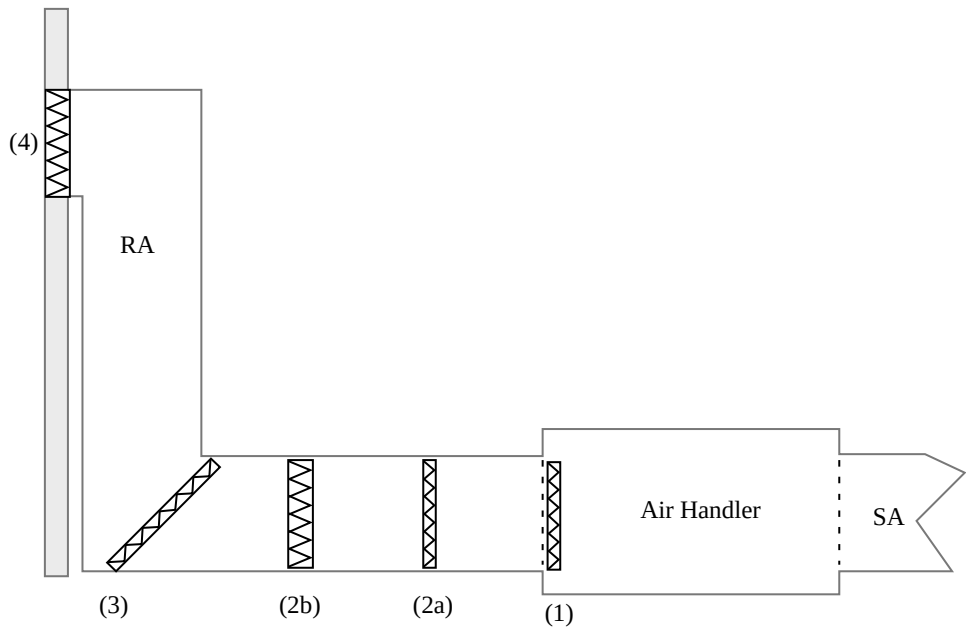

Figure 4-24 – Filter Location Options

The MERV 6 pleated filter provides enhanced particulate arrestance, but also provides longer service life than the conventional low efficiency panel filter. Typically, the pleated type filter will last 3 months or longer, depending upon operating conditions, as compared to the typical 1 month life cycle of disposable fiberglass filters. The deeper pleated versions will typically provide even longer life cycles, up to 1 year or more.

Example 4-30 – Filter Sizing

Question

I am installing a 1200 cfm furnace in a new house. It has a 20 inches x 20 inches filter furnished and installed in the unit. Is this in compliance?

Answer

Yes, you may assume that the equipment manufacturer has selected a compliant filter efficiency and pressure drop to match the features of their air handler.

Example 4-31

Question

What if the above unit has no filter installed but recommends a 20 inches x 20 inches filter size? What filter do I select?

Answer

A number of manufacturers produce a 1-inch deep MERV 6 for use in slide-in tracks and return air grills. If the pressure drop information is not furnished with the filter to assist with the selection, oversize the filter by at least one size multiple beyond the normal recommendation of the manufacturer. In this case, a filter selection of 20 inches" x 25 inches to over-size the filter would reduce the face velocity by 25 percent, which in turn reduces the initial pressure drop by almost 50 percent.

Example 4-32

Question

For the same 1200 cfm furnace, what other options do I have?

Answer

For any filter, the pressure drop, efficiency, and life cycle can all be affected by velocity control. By enlarging the filter cartridge size, the approach velocity is decreased along with the pressure drop. If the depth of the filter is increased, likewise the air velocity through the media is decreased, and that, in turn, substantially reduces the actual pressure drop. Doubling the pleat depth will halve the velocity through the media and decrease pressure drop by up to 75 percent.

Example 4-33

Question

I am installing an HVAC system with the filter to be installed at the return air grill. What should I do to accommodate a 1inch pleated MERV 6 filter?

Answer

You can reduce the face velocity and related pressure drop by employing multiple return air grilles. By doubling or tripling the return air filter surface area, the pressure drop is reduced by 75 percent or greater. Alternatively, you can increase the size of the return air grill similar to what was discussed in Example 4-31, above, or increase the depth of the filter as discussed in Example 4-32

Example 4-34

Question

I am installing a ductless split system in a space that is being added on to the house. Must I use the designated MERV 6 filter?

Answer

No, the requirement does not apply since there is no ductwork attached to the unit.

Example 4-35

Question

My builder supply house has only MERV 8 or greater efficiency filters. Is this in compliance?

Answer

Yes, this is a better efficiency. However, higher MERV filters usually have higher pressure drop. Make sure that the pressure drop does not exceed the MERV 6 specified performance level and adjust the size and related air velocity accordingly.

Air Inlets

From ASHRAE 62.2-2007

Section 6.8 Air Inlets

Air inlets that are part of the ventilation design shall be located a minimum of 10 ft from known sources of contamination such as a stack, vent, exhaust hood, or vehicle exhaust. The intake shall be placed so that entering air is not obstructed by snow, plantings, or other material. Forced air inlets shall be provided with rodent/insect screen [mesh not larger than 1/2 in.].

Exceptions:

(a) Ventilation openings in the wall may be as close as a stretched-string distance of 3 ft from sources of contamination exiting through the roof or dryer exhausts.

(b) No minimum separation distance shall be required between windows and local exhaust outlets in kitchens and bathrooms.

(c) Vent terminations covered by and meeting the requirements of the National Fuel Gas Code (NFPA 54-2002/ANSI Z223.1-2002, National Fuel Gas Code[3]) or equivalent.

When the ventilation system is designed with air inlets, the inlets must be located away from locations that can be expected to be sources of contamination. The minimum separation is 10 ft. Inlets include not only inlets to ducts, but windows which are needed to the opening area.

The Standards list some likely sources of contaminants. For typical residential applications, the sources will include:

- Vents from combustion appliances
- Chimneys
- Exhaust fan outlets
- Barbeque grills
- Locations where vehicles may be idling for any significant length of time
- Any other locations where contaminants will be generated

The Standards also require that air intakes be placed so that they will not become obstructed by snow, plants, or other material. Forced air inlets must also be equipped with insect/rodent screens, where the mesh is no larger than 1/2 inch.

There are three exceptions to the separation requirements.

- Windows or ventilation openings in the wall can be as close as three feet to sources of contamination which exit through the roof or to dryer exhausts.
- There is no minimum distance between windows and the outlet of a local exhaust outlet from kitchens or bathrooms.
- Vent terminations which meet the requirements of the National Fuel Gas Code, which has its own separation and location requirements, do not need to meet the requirements.

4.6.6 Air Moving Equipment Other Requirements (Chapter 7 of ASHRAE 62.2)

From ASHRAE 62.2-2007

Section 7.1 Selection and Installation

Ventilation devices and equipment shall be selected using tested and certified ratings of performance, such as those provided by the Home Ventilating Institute Division of Air Movement and Control Association International (airflow testing in accordance with ANSI/ASHRAE Standard 51-1999/AMCA 210-99, Laboratory Methods of Testing Fans for Aerodynamic Performance Rating,8 sound testing in accordance with AMCA 300-96, Reverberant Room Method for Sound Testing of Fans,9 and product certification procedure in accordance with HVI 920-01, Product Performance Certification Procedure10) or other widely recognized testing and certification organizations. Installations of systems or equipment shall be carried out in accordance with manufacturers' design requirements and installation instructions.

Equipment used to meet the whole house ventilation requirements or the local ventilation requirements shall be rated to deliver the needed airflow to have noise levels that meet the requirements of this section.

Selection and Installation

This section of the Standard requires that equipment used to comply with the standard be selected based on tested and certified ratings of performance for airflow and sound. The standard lists three standards which are acceptable, but equivalent other standards are also acceptable. When selecting fans for use in meeting the requirements of the standard, you must check to see that they have been tested and their performance meets the requirements.

In addition, the Standard requires that the fans be installed in accordance with the manufacturer's instructions. You must review the installation instructions and other literature shipped with the fan, and make sure that the installation complies with those instructions.

Sound Ratings for Fans

From ASHRAE 62.2-2007

Section 7.2 Sound Ratings for Fans)

Ventilation fans shall be rated for sound at no less than the minimum airflow rate required by this standard, as noted below.

Section 7.2.1 Continuous Ventilation Fans.

These fans shall be rated for sound at a maximum of 1.0 sone.

Section 7.2.2 Intermittent Fans.

These fans shall be rated for sound at a maximum of 3 sone, unless their maximum rated airflow exceeds 400 cfm (200 L/s).

Exception to Section 7.2: HVAC air handlers and remote-mounted fans need not meet sound requirements. To be considered for this exception, a remote-mounted fan must be mounted outside the habitable spaces, bathrooms, toilets, and hallways, and there must be at least 4 ft (1 m) of ductwork between the fan and the intake grille.

One common reason for not using ventilation equipment, particularly local exhaust fans, is the noise they create. To address this, the Standard require that

certain fans be rated for sound and have ratings below specified limits. The rating must be done at an airflow that is no less than the airflow the fan must provide to meet the Standards.

Because of the variables in length and type of duct and grille, there is no clearly repeatable way to specify a sound level for ventilation devices that are not mounted in the ceiling or wall surface. Consequently, air handlers, HRV/ERVs, inline fans and remote fans are exempted from the sound rating requirements that apply to surface-mounted fans. However, to reduce the amount of fan and/or motor noise that could come down the duct to the grille, the Standards sets a minimum of 4 ft of ductwork between the grille and the ventilation device. This may still produce an undesirable amount of noise for the occupant, especially if hard metal duct is used. Flexible insulated duct or a sound attenuator to will reduce the transmitted sound into the space.

Continuous Ventilation Fans

Fans which are installed to meet continuous ventilation requirements must be rated at 1.0 sone or less. This applies to both whole house ventilation fans and continuous local exhaust fans.

Intermittent Fans

Fans which are installed to meet ventilation requirements as intermittent fans, whether the whole house or local exhaust requirements, must be rated at 3.0 sone or less, unless the maximum rated airflow is greater than 400 cfm.

The Standards extend the concept of quiet fans to range hoods and regular bath fans, not just the whole building ventilation system, but it sets different limits. While the whole building fan or other combined systems that operate continuously must be rated at 1.0 sone or less, the intermittent local exhaust fans must be rated at 3.0 sones or less at their rating point. So the bath fans must be rated at a maximum of 3.0 sones.

Range hoods must also be rated at 3.0 sones or less, but this is at their required “working speed” of 100 cfm or so. Most range hoods have maximum speeds of much more than 100 cfm, but 100 cfm is the minimum airflow that is required by the Standards.

Airflow Rating

From ASHRAE 62.2-2007

Section 7.3 Airflow Rating

The airflows required by this Standard refer to the delivered outside airflow of the system as installed and tested using a flow hood, flow grid, or other airflow measuring device. As an alternative to airflow measurements, the airflow may be based on a pressure of 0.25 in. w.c. provided the length of ducts do not exceed the limits of Table 7.1 or manufacturers design criteria.

The airflow rating can be verified in one of two ways. The system can be tested after installation to show that the delivered airflow meets the design requirement. A prescriptive alternate is available for simple exhaust systems where the fan has a certified airflow rating that meets or exceeds the required airflow when measured at 0.25 inch w.g. and the duct system meets the requirements of Table 4-9. The certified airflow rating of a ventilation device is generally available from

the manufacturer. It is also available for hundreds of products in the Home Ventilating Institute (HVI) Certified Products Directory at the HVI website (www.hvi.org). Manufacturers can choose whether to provide the certified data for posting at the HVI website, but all of them should have available the rated data at 0.25 inches of water column static pressure.

The second part of the prescriptive approach to single fan exhaust system design is the use of minimum duct sizes as shown in Table 4-9. As can be seen, the higher the flow, the larger in diameter or shorter in length the duct has to be. Also note that smooth duct can be used to manage longer duct runs. The table only gives a limited number of airflow ratings, but the designer and/or installer may interpolate between columns for different airflow values.

Table 4-9 – Prescriptive Duct Sizing for Single Fan Exhaust Systems (from 62.2, Table 7.1)

Duct Type	**Flex Duct**				**Smooth Duct**			
Fan Rating (cfm@ 0.25 in. w.c.)	50 (25)	80 (40)	100 (50)	125 (65)	50 (25)	80 (40)	100 (50)	125 (65)
Diameter in.	Maximum Length ft. (m)							
3	X	X	X	X	5	X	X	X
4	70	3	X	X	105	35	5	X
5	NL	70	35	20	NL	135	85	55
6	NL	NL	125	95	NL	NL	NL	145
7 and above	NL	NL	NL	NL	NL	NL	NL	NL

This table assumes no elbows. Deduct 15 feet of allowable duct length for each elbow.
NL = no limit on duct length of this size.
X = not allowed, any length of duct of this size with assumed turns and fitting will exceed the rated pressure drop.

Example 4-36 – Prescriptive Duct Sizing

Question

I need to provide 75 cfm of continuous ventilation, which I plan to do using a central exhaust fan. I plan to connect the fan to a roof vent termination using flex duct. The duct will be about 8 ft long, with no real elbows, but some slight bends in the duct. What size duct do I need to use?

Answer

From Table 4-9, using the 80 cfm, flex duct column, we find that the maximum length with 4 inches duct is 3 ft, so you cannot use 4 inches duct. With 5 inches duct the maximum length is 70 ft, so that will clearly be adequate. Even if the bend in the duct is treated as an elbow, the allowable length only drops to 55 ft, more than adequate for the 8 ft required.

Example 4-37

Question

For the situation in example 4-36, again providing 75 cfm, what size duct would I need if smooth metal duct were used? In this case the total length would increase to about 10 ft, and there would be 2 elbows.

Answer

Using the 80 cfm, smooth duct column of Table 4-9, we find that the maximum length of 4 inches duct is 35 ft. Subtracting 15 ft for each of the 2 elbows leaves us with 5 ft, which is not long enough. But 80 cfm is a higher airflow than we need, so we are allowed to interpolate between the 80 cfm and 50 cfm columns. At 50 cfm, 4 inches duct can be 105 ft. Interpolating to 75 cfm we get (75-50)/(80-50)x(35-105)+105= 46.7 ft, rounded down to 46 ft. Subtracting 30 ft for the 2 elbows, we get 16 ft, which is more than the 10 ft needed, so 4 inches smooth metal duct can be used.

Example 4-38

Question

I will need a 100 cfm range hood. I have two possible duct routings. One is 15 ft long and will require 3 elbows. The other is 35 ft long but only requires one elbow. What size flex duct do I need to use?

Answer

First, let's take the 2 routings and add in the correction for the elbows. Elbow corrections can be either added to the desired length or subtracted from the allowable length. In this case, we know the desired length, so we'll add the elbows. We get 15 ft plus 3 times 15 ft for a total of 60 ft, or 35 ft plus 15 ft equals 50 ft.

Looking at Table 4-9, in the 100 cfm, flex duct column, we find that the maximum length with 5 inches duct is 35 ft, which is less than the adjusted length for either routing. With 6 inches duct, the maximum length is 125 ft, longer than either adjusted length. 6 inches duct would need to be used for either routing. *Note:* The building code may not allow flex duct to be used for the range hood, in which case smooth duct would be required. For smooth duct, 5 inches would be acceptable.

Multi-Branch Exhaust Ducting

From ASHRAE 62.2-2007

Section 7.4 Multi-Branch Exhaust Ducting (62.2 text)

If more than one of the exhaust fans in a dwelling unit shares a common exhaust duct, each fan shall be equipped with a back-draft damper to prevent the recirculation of exhaust air from one room to another through the exhaust ducting system. Exhaust fans in separate dwelling units shall not share a common exhaust duct. Exhaust outlets from more than one dwelling unit may be served by a single exhaust fan downstream of all the exhaust inlets, if the fan is designed and intended to run continuously or if each outlet is equipped with a back-draft damper to prevent cross-contamination when the fan is not running.

The Standard contains restrictions on several situations where multiple exhausts are connected through a combined duct system. These restrictions are intended to prevent air from moving between spaces through the exhaust ducts.

The first restriction is that if more than one exhaust fan in a dwelling shares a common duct, then each fan must be equipped with a backdraft damper so that air exhausted from one bathroom or unit is not allowed to go into another space. Exhaust fans in multiple dwelling units may not share a common duct.

The other restriction applies to remote fans serving more than one dwelling unit. Sometimes a single remote fan or HRV/ERV will exhaust from several units in a multifamily building. This section does not preclude the use of that type of system, but it does require that either the shared exhaust fan operate continuously or that each unit be equipped with a backdraft damper so that air cannot flow from unit to unit when the fan is off.

In multifamily buildings, fire codes may impose additional restrictions.

4.7 Alternative Systems

4.7.1 Hydronic Heating Systems

Hydronic heating is the use of hot water to distribute heat. Hydronic heating is discussed in this compliance manual as an “Alternative System” because it is much less common in California than in other parts of the United States.

A hydronic heating system consists of a heat source, which is either a boiler or water heater, and a distribution system. There are three main types of hydronic distribution systems, and they may be used individually or in combination: baseboard convectors or radiators, hot water air handlers, and radiant panel heating systems. These three options are illustrated in Figure 4-25.

Baseboard convectors or radiators are most effective when mounted near the floor. Cool air rises by gravity over heated panels or finned tubes and warms the air in the room. These devices also increase the mean radiant temperature of the space, improving comfort. Baseboard convectors or radiators do not require ducting.

Air handlers consist of a blower and finned tube coil enclosed in a sheet metal box (similar to a typical residential furnace), and may be ducted or non-ducted. Air handlers may also include refrigerant coils for air conditioning. Some air handlers are compact and can fit under cabinets.

Radiant panels may be mounted on or integrated with floors, walls, and ceilings. Radiant floor panels are most typical. See the separate section below for additional requirements specific to radiant floor designs.

Mandatory Requirements

For hydronic heating systems without ducts, the mandatory measures cover only pipe insulation, tank insulation, and boiler efficiency. Otherwise, for fan coils with ducted air distribution, the mandatory air distribution measures also apply as described earlier in this document. And for combined hydronic systems, as described below, mandatory water heating requirements also apply to the water heating portion of the system.

§150(j) Water System Pipe and Tank Insulation and Cooling Systems Line Insulation

The typical residential hydronic heating system operating at less than 200° F must have at least 1 in. (25 mm) of nominal R-4 insulation on pipes up to 2 inches (50 mm) in diameter and 1.5 in. (38 mm) of insulation on larger pipes. For other temperatures and pipe insulation characteristics see Tables 150-A and 150-B in the Standards.

There are a few exceptions where insulation is not required: sections of pipes where they penetrate framing members; pipes that provide the heat exchange surface for radiant floor heating; piping in the attic that is covered by at least 4 inches (100 mm) of blown insulation; and piping installed within walls if all the requirements for Insulation Installation Quality are met (see the envelope chapter).

If the system includes an unfired hot water storage tank, then the tank must be either wrapped with R-12 insulation or insulated internally to at least R-16.

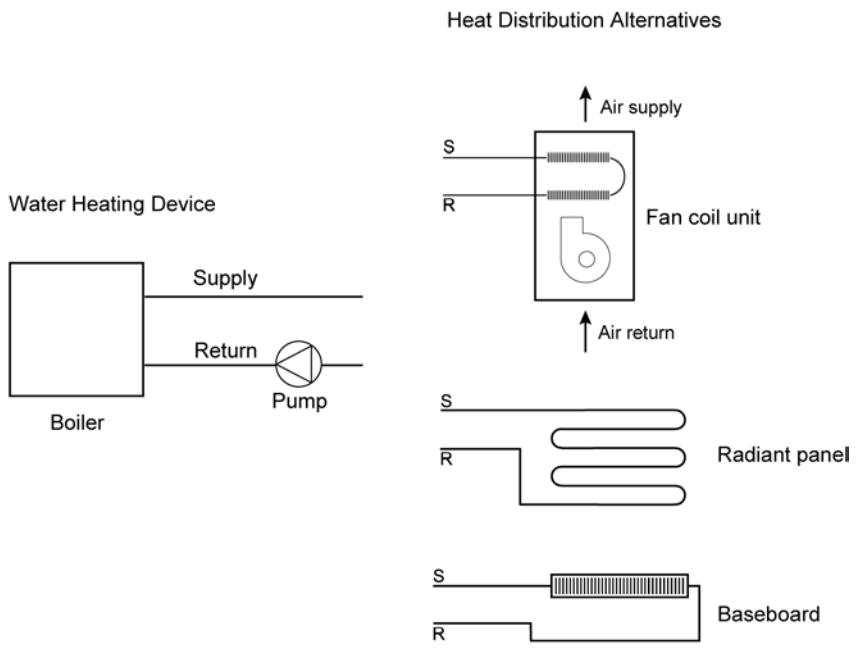

Figure 4-25 – Hydronic Heating System Components

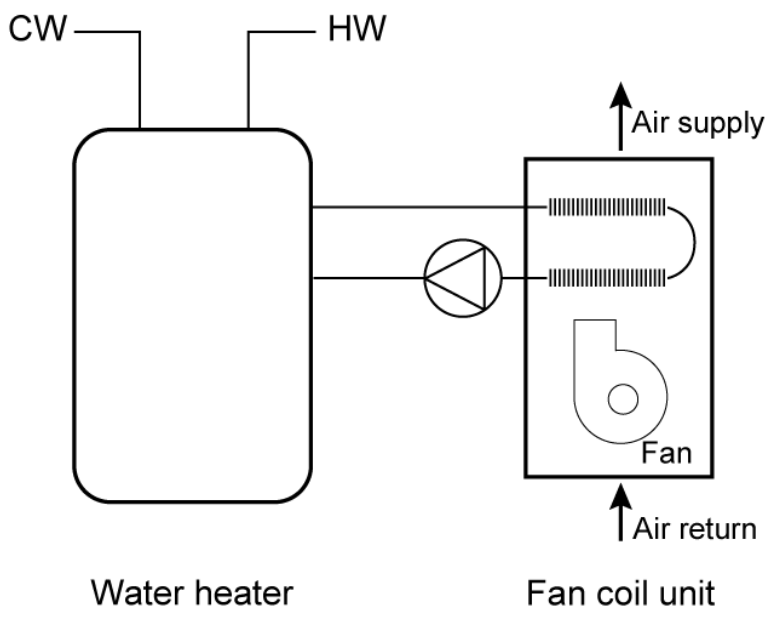

Figure 4-26 – Combined Hydronic System with Water Heater as Heat Source

§123 Requirements for Pipe Insulation

For pipes in hydronic heating systems that operate at pressure greater than 15 psi, the requirements of §123 apply. These are the same requirements that apply to nonresidential piping systems.

Appliance Efficiency Regulations, Title 20

Gas or oil boilers of the size typically used for residential space heating (less than 300,000 Btu/h capacity) must be rated with an AFUE of 80 percent or greater. A gas or oil water heater may also be used as a dedicated source for space heating. Other hot water sources, including heat pumps or electric resistance water heaters, are not allowed for use in dedicated space heating systems. Therefore, some water heaters may be used for space heating only if used as part of a combined hydronic system as described below. In that case, the mandatory water heater requirements apply.

Thermostat requirements also apply to hydronic systems as described in Section 4.5.1.

Prescriptive Requirements

There are no specific prescriptive requirements that apply to hydronic systems. However, if the system has a fan coil with ducted air distribution, the relevant prescriptive requirements apply, including duct insulation and duct sealing.

Compliance Options

Credit for choosing a hydronic heating system is possible using the performance compliance method. The standard design is assumed to have a furnace and ducted air distribution system. Therefore, hydronic systems without ducts can take credit for avoiding duct leakage penalties. In addition, minimizing the amount of pipe outside of conditioned space will provide some savings. Hydronic heating compliance calculations are described in the Residential ACM Manual, Chapter 5.

If the proposed hydronic system includes ducted air distribution, then the associated compliance options described earlier in this chapter may apply, such as adequate airflow (if there is air conditioning) and supply duct location.

A “combined hydronic” system is another compliance option that is possible when using the performance method. Combined hydronic heating refers to the use of a single water heating device as the heat source for both space and domestic hot water heating.

There are two types of combined hydronic systems. One uses a boiler as a heat source for the hydronic space heating system. The boiler also heats domestic water by circulating hot water through a heat exchanger in an indirect-fired water heater.

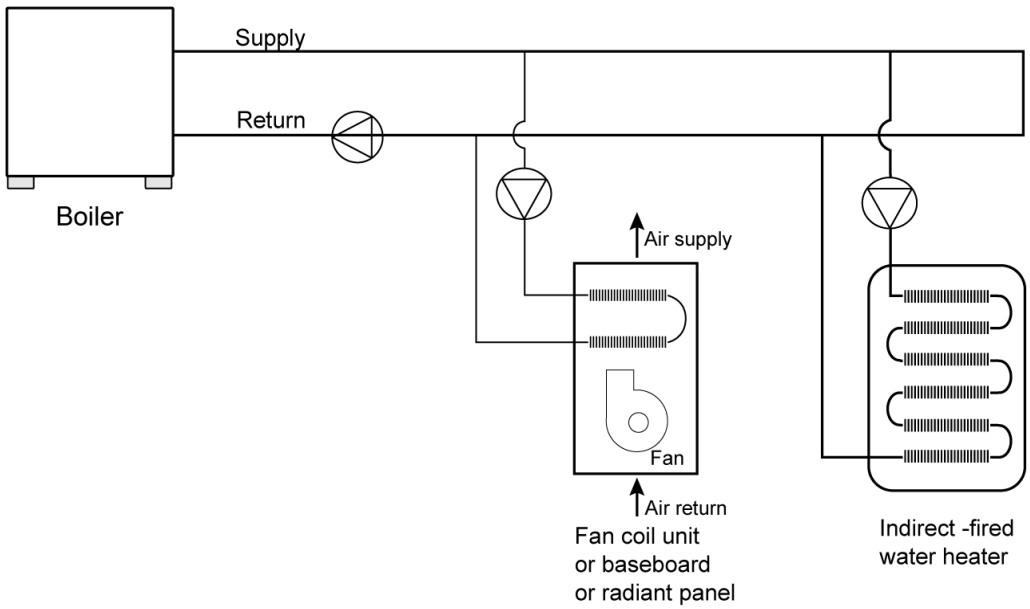

Figure 4-27 – Combined Hydronic System with Boiler and Indirect Fired Water Heater

The other type of hydronic heating uses a water heater as a heat source. The water heater provides domestic hot water as usual. Space heating is accomplished by circulating water from the water heater through the space heating delivery system. Sometimes a heat exchanger is used to isolate potable water from the water circulated through the delivery system. Some water heaters have built-in heat exchangers for this purpose.

For compliance calculations, the water heating function of a combined hydronic system is analyzed for its water heating performance as if the space heating function were separate. For the space heating function, an “effective” AFUE or HSPF rating is calculated. These calculations are performed automatically by the compliance software (see the compliance program vendor’s supplement).

4.7.2 Radiant Floor System

One type of distribution system is the radiant floor system, either hydronic or electric, which must meet mandatory insulation measures (see below). Radiant floors may take one of several forms. Tubing or electric elements for radiant floor systems may be:

- Embedded in a concrete floor slab,
- Installed over the top of a wood sub-floor and covered with a concrete topping,
- Installed over the top of wood sub-floor in between wood furring strips, or
- Installed on the underside surface of wood sub-floor

In the latter two types of installations, aluminum fins are typically installed to spread the heat evenly over the floor surface, and to reduce the temperature of the water as required. All hydronic systems use one or more pumps to circulate hot water. Pumps are controlled directly or indirectly by thermostats, or by special outdoor reset controls.

Mandatory Insulation Measures

§118(g) Insulation Requirements for Heated Slab Floors

Standards Table 118-A Slab Insulation Requirements for Heated Slab-On-Grade Floors

Table 4-10 – Slab Insulation Requirements for Heated Slabs

Location of Insulation	Orientation of Insulation	Installation Criteria	Climate Zone	Insulation R-value
Outside edge of heated slab, either inside or outside the foundation wall	Vertical	From the level of the top of the slab, down 16 inches or to the frost line, whichever is greater? Insulation may stop at the top of the footing where this is less than the required depth. For below-grade slabs, vertical insulation shall be extended from the top of the foundation wall to the bottom of the foundation (or the top of the footing) or frost line, whichever is greater.	1-15	5
			16	10
Between heated slab and outside foundation wall	Vertical and Horizontal	Vertical insulation from the top of the slab at the inside edge of the outside wall down to the top of the horizontal insulation. Horizontal insulation from the outside edge of the vertical insulation extending 4 feet toward the center of the slab in a direction normal to the outside of the building in the plan view.	1-15	5
			16	10 vertical and 7 horizontal

Radiant floor systems in concrete slabs must have insulation between the heated portion of the slab and the outdoors.

When space heating hot water pipes or heating elements are set into a concrete slab-on-grade floor, slab-edge insulation from the level of the top of the slab, down 16 inches (200 mm) or to the frost line, whichever is greater (insulation may stop at the top of the footing, where this is less than the required depth), or insulation installed down from the top of the slab and wrapping under the slab for a minimum of 4 ft toward the middle of the slab, is required. The required insulation value for each of these insulating methods is either R-5 or R-10 depending on climate zone as shown in Table 4-10. Any part of the slab extending outward horizontally must be insulated to the level specified in Table 4-10.

When using the performance compliance method with slab-on-grade construction, the standard design includes slab edge insulation as described above using the F-factors in Reference Joint Appendix JA4, Table 4.4.8.

When space heating hot water pipes or heating elements are set into a lightweight concrete topping slab laid over a raised floor, insulation must be applied to the exterior of any slab surface from the top of the slab where it meets the exterior wall, to the distance below ground level described in Table 4-10. If the slab does

not meet the ground on its bottom surface, the specified insulation level must be installed on the entire bottom surface of the raised slab. Any part of the slab extending outward horizontally must be insulated to the level specified in Table 4-10. For lightweight slabs installed on raised floors and inside exterior walls, the overall wall R-value and overall floor R-value (determined as 1/(U-factor)) may be counted toward meeting the minimum R-value requirements specified in Table 4-10.

Raised floor insulation that meets the mandatory minimum R-value for wood floor assemblies also meets the requirement for insulation wrapping under the lightweight topping slab.

Slab edge insulation applied to basement or retaining walls (with heated slab below grade) must be installed so that insulation starts at or above ground level and extends down to the bottom of the foundation or to the frost line, whichever is greater.

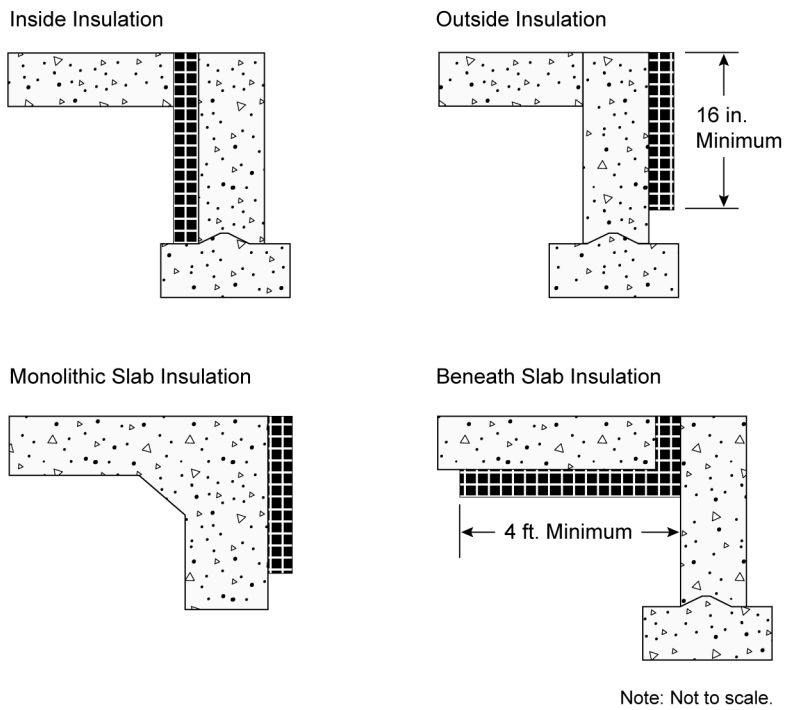

Figure 4-28– Heated Slab-On-Grade Floor Insulation Options

Local conditions (such as a high water table) may require special insulation treatment in order to achieve satisfactory system performance and efficiency. To determine the need for additional insulation, follow the recommendations of the manufacturer of the hydronic tubing or heating element being installed. Where there is a danger of termite infestation, install termite barriers, as required, to prevent hidden access for insects from the ground to the building framing.

In addition to the insulation R-value requirements, the Standards also set mandatory measures related to moisture absorption properties of the insulation and protection of the insulation from physical damage or pest intrusion.

Example 4-39

Question

My client wants a dedicated hydronic-heating system (space heating only), but a few things are unclear: (1) What piping insulation is required? (2) Can I use any compliance approach? (3) Do I have to insulate the slab with slab edge insulation? and (4) What special documentation must be submitted for this system type?

Answer

(1) The supply lines not installed within a concrete radiant floor must be insulated in accordance with §150(j)—1.0 in. (25mm) of nominal R-4 on pipes that are 2 in. (50 mm) or less in diameter, and 1.5 in. (38 mm) for pipes greater than 2 in. (50 mm) in diameter.

(2) You can use any compliance approach, but the boiler must meet the mandatory efficiency 80 percent AFUE.

(3) The slab edge insulation shown in Table 4-10 is required only when the distribution system is a radiant floor system (pipes in the slab). When this is the case the insulation values shown are mandatory measures (no modeling or credit).

(4) No special documentation is required.

Example 4-40

Question

What are the slab edge insulation requirements for a hydronic-heating system with the hot water pipes in the slab?

Answer

The requirements for slab edge insulation can be found in §118 and §150(l).

Material and installation specifications are as follows:

- insulation values as shown in Table 4-10
- protected from physical damage and ultra-violet light deterioration,
- water absorption rate no greater than 0.3 percent (ASTM-C272), and
- water vapor permeance no greater than 2.0 per in. (ASTM-E96-90).

4.7.3 Evaporative Cooling

Evaporative coolers provide cooling to a building by either passing outdoor air through a wetted evaporative media (direct evaporative cooler), by indirect cooling through a non-porous heat exchanger separating evaporatively cooled secondary air from outdoor air, or by a combination indirect-direct system that combines an indirect heat exchanger with a downstream direct evaporative process. Although direct coolers are the most common systems available, the more advanced indirect and indirect-direct systems offer generally lower supply air temperatures with less moisture addition to indoor space. For the 2008 Energy Efficiency Standards, performance credit is allowed only for indirect and indirect-direct evaporative cooling systems. All coolers receiving credits within the ACM Manual

must be listed in the Energy Commission's Title 20 Evaporative Cooler appliance database[1].

Evaporative coolers may be used with any compliance approach. In the prescriptive compliance approach, all evaporative coolers are treated as a minimum efficiency 13.0 SEER air conditioner.

In the performance approach the compliance software uses an hourly model based on unit effectiveness, supply airflow, and power to determine the magnitude of the credit based on climate conditions and unit sizing relative to the loads. Typical cooling budget credits are approximately 20-30 percent, depending upon these factors.

The evaporative cooling system must meet the following requirements to receive credit based on the hourly performance method described above. Direct coolers, as well as indirect and indirect-direct coolers not meeting these criteria shall be modeled as a minimum efficiency (13.0 SEER) central air conditioner.

Eligibility and Installation Criteria

1. The equipment manufacturer shall certify to the Commission that water use does not exceed 7.5 gallons per ton hour based on the Title 20 Appliance Efficiency Regulations testing criteria.
2. Equipment shall be permanently installed (no window or portable units).
3. Installation shall provide for automatic relief of supply air from the house with maximum air velocity through the relief dampers not exceeding 800 fpm (at the Title 20 rated airflow). Pressure relief dampers and ductwork shall be distributed to provide adequate airflow through all habitable rooms. For installations with an attic, ceiling dampers shall be installed to relieve air into the attic and then to outside through attic vents. For installations without an attic, sidewall relief dampers are acceptable.
4. To minimize water consumption, bleed systems are not allowed.
5. A water quality management system (either "pump down" or conductivity sensor) is required. "Pump down" systems can either be integral to the evaporative cooler or they can be accessories that operate on a timed interval. The time interval between pumps shall be set to a minimum of 6 hours of cooler operation. Longer intervals are encouraged if local water quality allows.
6. Automatic thermostats are required. Manual On/off controls are not allowed.
7. If the evaporative cooler duct system is shared with a heating and/or cooling system, the installed duct system shall employ backdraft dampers at the evaporative cooler supply.
8. The installing contractor must provide a winter closure device that substantially blocks outdoor air from entering the indoor space.

[1] http://www.energy.ca.gov/appliances/appliance/excel_based_files/Non_Central_AC_HPs/

9. The size of the water inlet connection at the evaporative cooler shall not exceed 3/8 inch.
10. Unless prohibited by local code, the sump overflow line shall not be directly connected to a drain and shall be terminated in a location that is normally visible to the building occupants.

Example 4-41

Question

How are applications with vapor compression cooling systems and evaporative cooling systems handled?

Answer

In situations where both evaporative cooling system(s) and vapor compression system(s) are installed in a house, the sizing of the evaporative cooler will dictate the magnitude of the credit. The performance approach will insure that an evaporative cooler sized to meet most of the cooling loads will generate a higher credit than one sized to meet a fraction of the design cooling load.

Example 4-42

Question

How do you model multiple evaporative coolers on one house?

Answer

In situations with multiple evaporative coolers, effectiveness inputs should be averaged, and airflow and power inputs should be totaled. Performance characteristics of each piece of equipment should be individually listed on the compliance forms.

4.7.4 Ground-Source Heat Pumps

Table 4-11 – Standards for Ground Water-Source and Ground-Source Heat Pumps Manufactured on or after October 29, 2003

Source: Section 1605.3 Table C-7 of the 2007 California Appliance Efficiency Regulations

Appliance	Rating Condition	Minimum Standard
Ground water source heat pumps (cooling)	59º F entering water temperature	16.2 EER
Ground water source heat pumps (heating)	50º F entering water temperature	3.6 COP
Ground source heat pumps (cooling)	77º F entering brine temperature	13.4 EER
Ground source heat pumps (heating)	32º F entering brine temperature	3.1 COP

A geothermal or ground-source heat pump uses the earth as a source of energy for heating and as a heat sink for energy when cooling. Some systems pump water from an aquifer in the ground and return the water to the ground after exchanging heat with the water. A few systems use refrigerant directly in a loop of piping buried in the ground. Those heat pumps that either use a water loop or pump water from an aquifer have efficiency test methods that are accepted by the Energy Commission.

The mandatory efficiencies for ground water source heat pumps are specified in the California Appliance Efficiency Regulations, and repeated in Table 4-11. These efficiency values are certified to the Energy Commission by the manufacturer and are expressed in terms of Coefficient of Performance (COP) for heating and EER for cooling.

For the performance compliance approach, the COP must be converted to HSPF. To take appropriate credit the EER should be entered as a HERS verified EER, which requires that a HERS rater verify the equipment efficiency. When this approach is used, a significant portion of the ground source heat pumps efficiency will not be accounted for. If credit is not taken, the EER may be used in place of the SEER. When heat pump equipment is not tested for HSPF, calculate the HSPF as follows:

Equation 4-3

$$HSPF = (3.2 \times COP) - 2.4$$

The efficiency of geothermal heat pump systems is dependent on how well the portion of the system in the ground works. Manufacturers' recommendations must be followed carefully to ensure that the system is appropriately matched to the soil types and weather conditions. Local codes may require special installation practices for the ground-installed portions of the system. Verify that the system will meet local code conditions before choosing this type of system to meet the Standards.

4.7.5 Solar Space Heating

Solar space-heating systems are not recognized within either the prescriptive packages or the performance compliance method.

4.7.6 Wood Space Heating

The Energy Commission's exceptional method for wood heaters with any type of backup heating is available in areas where natural gas is not available. If the required eligibility criteria are met, a building with one or more wood heaters may be shown to comply with the Standards using either the prescriptive or performance approaches as described below.

Prescriptive Approach

The building envelope conservation measures of any one of the Alternative Component Packages must be installed. The overall heating system efficiency (wood stove plus back-up system) must comply with the prescriptive requirements.

Performance Approach

A computer method may be used for compliance when a home has wood space heat. There is no credit, however. Both the proposed design and the standard building are modeled with the same system, example, with the overall heating

system efficiency equivalent to a 78 percent AFUE central furnace with ducts in the attic insulated to either Package D or E levels and with diagnostic duct testing.

Wood Heater Qualification Criteria

The Standards establish exceptional method guidelines for the use of wood heaters. If all of the criteria for the wood heat exceptional method are not met, a backup heating system must be included in the compliance calculations as the primary heat source.

The following eligibility criteria apply:

1. The building department having jurisdiction must determine that natural gas is not available.

Note: Liquefied petroleum gas, or propane, is not considered natural gas.

2. The local or regional air quality authority must determine that its authorization of this exceptional method is consistent with state and regional ambient air quality requirements pursuant to Sections 39000 to 42708 of the California Health and Safety Code.
3. The wood heater must be installed in a manner that meets the requirements of all applicable health and safety codes, including, but not limited to, the requirements for maintaining indoor air quality in the CMC, in particular those homes where vapor barriers are.
4. The wood heater must meet the EPA definition of a wood heater as defined in Title 40, Part 60, Subpart AAA of the Code of Federal Regulations (40CFR60 Subpart AAA) (see below).
5. The performance of the wood heater must be certified by a nationally recognized agency and approved by the building department having jurisdiction to meet the performance standards of the EPA.
6. The rated output of the wood heater must be at least 60 percent of the design heating load, using calculation methods and design conditions as specified in §150(h).
7. At the discretion of the local enforcement agency, a backup heating system may be required and be designed to provide all or part of the design heating load, using calculation methods and design conditions as specified in §150(h).
8. The wood heater must be located such that transfer of heat from the wood heater is effectively distributed throughout the entire residential unit, or it must be used in conjunction with a mechanical means of providing heat distribution throughout the dwelling.
9. Habitable rooms separated from the wood heater by one free opening of less than 15 ft^2 or two or more doors must be provided with a positive heat distribution system, such as a thermostatically controlled fan system. Habitable rooms do not include closets or bathrooms.

10. Wood heaters on a lower level are considered to heat rooms on the next level up, provided they are not separated by two or more doors.
11. The wood heater must be installed according to manufacturer and local enforcement agency specifications and must include instructions for homeowners that describe safe operation.
12. The local enforcement agency may require documentation that demonstrates that a particular wood heater meets any and all of these requirements.

40CFR60 Subpart AAA includes minimum criteria for wood heaters established by the US EPA. These criteria define a wood heater as an enclosed, wood-burning appliance capable of and intended for space heating or domestic water heating that meets all of the following criteria:

1. An air-to-fuel ratio averaging less than 35 to 1
2. A firebox volume less than 20 ft^3.
3. A minimum burn rate less than 5 kilogram/hour (11.0 lbs/hr)
4. A maximum weight of less than 800 kilograms (1760 lbs)

The federal rules explicitly exclude furnaces, boilers, cook stoves, and open masonry fireplaces constructed on site, but include wood-heater inserts.

Example 4-43

Question

Are pellet stoves treated the same as wood stoves for the purposes of Standards compliance?

Answer

Yes.

Example 4-44

Question

If a wood stove is installed in a wall, does it have to meet the fireplace requirements of §150(e)?

Answer

No. A wood stove that meets EPA certification requirements does not have to meet any requirements applicable to fireplaces.

4.7.7 Gas Appliances

§115 Pilot Lights

As noted in an earlier section, pilot lights are prohibited in fan-type central furnaces. The Standards also prohibit pilot lights in cooking appliances, pool heaters, and spa heaters. However, one exception is provided for household cooking appliances without an electrical supply voltage connection and in which each pilot consumes less than 150 Btu/h.

For requirements related to installation of fireplaces, decorative gas appliances, and gas logs, see the envelope chapter.

4.7.8 Evaporatively Cooled Condensers

Evaporatively Cooled Condenser Air conditioner are a type of air conditioning systems that can provide significant space cooling savings especially in hot dry climates such as the central valley, interior south coast and desert area of California. The equipment minimal efficiencies are determined according to federal test procedures. Their efficiencies are reported in terms of Energy Efficiency Rating (EER).

The EER is the full load efficiency at specific operating conditions. In cooling climate zones of California, high EER units are more effective in saving energy than high SEER units. Using the performance compliance method, credit is available for specifying evaporatively cooled air conditioner. When credit is taken for a high EER, field verification by a HERS rater is required.

If an evaporatively cooled air conditioner is installed, HERS verified measures must be installed including duct sealing, airflow and refrigerant charge or charge indicatory lights. Besides the HERS verification, there are additional special requirement for evaporatively cooled condensing air conditioners. Among these are the following requirements, that the manufacturer provide certification that water use is limited to no more than 0.15 gallon per minute per ton of capacity and that the supply line be no larger than ¼ inch in diameter. For a listing of all the requirements for evaporatively cooled condensing air conditioners see the CF-6R compliance form.

4.7.9 Ice Storage Air Conditioners

Ice storage air conditioners use a conventional split system air conditioner where the outdoor coil in installed in a large storage tank. The system uses a special operating schedule which runs the compressor during the cooler night hours. During this period the system turns the water in the storage tank into ice. As the day warms up and the house needs cooling, the compressor is shut off and the system uses the ice in the storage tank as the source of cooling.

The only way to claim compliance credit for installing an ice storage air conditioner is to use the performance compliance method.

If an ice storage air conditioner is installed, HERS verified measures must be installed including duct sealing, airflow and refrigerant charge or charge indicator lights.

4.7.10 Non-Ducted Systems

Several manufacturers currently offer equipment that does not use air distribution ducts to heat or cool spaces. These systems use either refrigerant or water that has been heated and/or cooled to conditions the space. Besides not using duct work these systems have advanced controls and full range multi-speed compressors that will allow for optimal performance through a wide range of conditioning loads without losing efficiency.

Currently these systems must be modeled as though they were minimal efficient units. The Energy Commission expects that the manufacturers will apply for a compliance option in the near future which will allow for the development of appropriate modeling rules to be included in the performance calculation approach.

As with all other high performance system, the Energy Commission recommend that all associated HERS verified measure be conducted to assure that all of the efficiency of this equipment is captured.

4.8 Compliance and Enforcement

The purpose of this section is to highlight compliance documentation and field verification requirements related to heating and cooling systems.

4.8.1 Design

The initial compliance documentation consists of the Certificate of Compliance (CF-1R). This document is required to be included on the plans and specifications. The CF-1R has a section where special modeling features are listed. The following are heating and cooling system features that should be listed in this section if they exist in the proposed design:

Special Features Not Requiring HERS Rater Verification:

- Ducts in a basement
- Ducts in a crawlspace
- Ducts in an attic with a radiant barrier
- Hydronic heating and system design details
- Gas-fired absorption cooling
- Zonal control
- Ductless wall heaters

Special Features Requiring HERS Rater Verification:

- Duct sealing
- Verified duct design – for reduced duct surface area and ducts in conditioned space
- Low leakage ducts in conditioned space
- Low leakage air handlers
- Refrigerant charge
- Installation of a Charge Indicator Display (CID)
- Verified cooling coil airflow
- Air handler fan watt draw
- High energy efficiency ratio (EER)

- Maximum rated total cooling capacity
- Evaporatively cooled condensers
- Ice storage air conditioners
- Ducts <12 ft outside conditioned space.

Information summarizing measures requiring field verification and diagnostic testing is presented in Table RA2-1 of the Reference Residential Appendix RA2. The field verification and diagnostic testing protocols that must be followed to qualify for compliance credit are described in RA3 of the Reference Residential Appendix.

If registration of the CF-1R is required (see Chapter 2 for requirements), the building owner, or the person responsible for the design must submit the CF-1R to the HERS provider Data registry for retention following the procedures described in Chapter 2 and in RA2 of the Reference Residential Appendix.

4.8.2 Construction

During the construction process, the contractor and/or specialty contractors must complete the applicable sections of an Installation Certificate (CF-6R) for any building design special features specified on the certificate of compliance. A list of CF-6R sections that apply to the HVAC special feature requirements follows:

- HVAC Systems
- Duct Leakage Diagnostics
- Refrigerant Charge Verification. The installer must provide Temperature Measurement Access Holes (TMAH) and if required prescriptively, Saturation Temperature Measurement Sensors (STMS). An alternative to refrigerant charge verification is installation of a charge indicator display on the system.
- Duct Design Verification for the Location and Area Reduction compliance measures. The duct design specifications and layout must be included on the building plans submitted to the enforcement agency, and a copy of the duct design layout must be posted or made available with the building permit(s) issued for the building, and must be made available to the enforcement agency, installing contractor, and HERS rater for use during the installation work and for all applicable inspections.
- Fan Watt Draw Verification
- Cooling Coil Airflow Verification. Installer must provide a hole for the Placement of a Hole Static Pressure Probe (HSPP), or a Permanently Installed Static Pressure Probe (PSPP)
- Maximum Rated Total Cooling Capacity Verification
- High EER Verification. The ARI ratings for the installed system must meet or exceed the required specifications for the system shown on the CF-1R. The rating for the installation will require HERS verification.

- Whole Building Ventilation for indoor Air Quality (this is a mandatory requirement for all new construction)

If registration of the CF-6R is required, the licensed person responsible for the installation must submit the portion of the CF-6R information that applies to the installation to a HERS provider Data registry using procedures described in Chapter 2 and in RA2 of the Reference Residential Appendix.

4.8.3 Field Verification and/or Diagnostic Testing

For buildings for which the Certificate of Compliance (CF-1R) requires HERS field verification for compliance with the Standards, a HERS rater must visit the site to perform field verification and diagnostic testing, to complete the applicable heating and cooling system portions of a Certificate of Field Verification and Diagnostic Testing (CF-4R). The following measures require field verification and diagnostic testing if they are used in the proposed design for compliance, and are listed on the CF-1R as special Features Requiring HERS Rater Verification:

- Verified duct leakage. Note: Outside air (OA) ducts for Central Fan Integrated (CFI) ventilation systems, shall not be sealed/taped off during duct leakage testing. CFI OA ducts that utilize controlled motorized dampers, that open only when OA ventilation is required to meet ASHRAE Standard 62.2, and close when OA ventilation is not required, may be configured to the closed position during duct leakage testing.
- Verified Duct Design - supply duct location, surface area, and R-value (including buried ducts)
- Low leakage ducts in conditioned space
- Low leakage air handlers
- Refrigerant charge verification utilizing the installer-provided Temperature Measurement Access Holes (TMAH), and Saturation Temperature Measurement Sensors (STMS)
- Verification of installation of a Charge Indicator Display (CID)
- Forced air system cooling coil airflow verification utilizing the installer-provided hole for the Placement of a Hole Static Pressure Probe (HSPP), or a Permanently Installed Static Pressure Probe (PSPP)
- Air handler fan watt draw
- High efficiency air conditioner energy efficiency ratio (EER)
- Verified maximum cooling capacity
- Evaporatively cooled condensers
- Ice storage air conditioners
- Photovoltaic (PV) field Verification. To receive PV rebates for photovoltaic installations pursuant to the New Solar Home Partnership, the output of the installed system must be measured and shown to comply with the output specified on the rebate

application (taking into account variables such as the solar insolation, the time, and the temperature)

Field verification is necessary only when performance credit is taken for the measure. For example, maximum cooling capacity need only be HERS verified if maximum cooling capacity was used to achieve credit in the proposed design.

When registration of the CF-4R is required, the HERS rater must submit the CF-4R information to the HERS provider data registry as described in Chapter 2. For additional detail describing HERS verification and the registration procedure, refer to RA2 of the Reference Residential Appendix.

4.9 Refrigerant Charge

4.9.1 Refrigerant Charge Testing

This section provides a summary of the procedures for verifying refrigerant charge for air conditioning systems without a charge indicator display. RA3.2 of the Reference Residential Appendix describes the procedures in detail, and refrigeration technicians who do the testing should refer to these and other technical documents. This section is intended for those who need to know about the procedures but will not be doing the testing.

Overview

A split system air conditioner undergoes its final assembly at the time of installation. This installation must be verified to ensure proper performance. Important factors include the amount of refrigerant in the system (the charge) and the proper functioning of the metering device. Air conditioner energy efficiency suffers if the refrigerant charge is either too low or too high and if the metering device is not functioning properly. In addition to a loss of efficiency, errors in these areas can lead to premature compressor failure.

To help avoid these problems, the prescriptive standards require that systems be correctly installed. This section describes the measurements and tests required to verify proper refrigerant charge and that the metering device is working as designed. The testing requirement applies only to ducted split system central air conditioners and ducted split system central heat pumps. An alternative to the testing requirement is the installation of a charge indicator display that continuously monitors the function of the unit. The testing requirement does not apply to packaged systems, for which final assembly is completed in the factory.

There are two procedures, the Standard Method for use when the outdoor air temperature is 55°F or above and the Alternate Method that is used by installers when the outdoor air temperature is below 55°F. All HERS verifications must be done using the standard method.

The testing must occur after the HVAC contractor has installed and charged the system in accordance with the manufacturer's specifications. The procedure requires properly calibrated digital thermometers, thermocouples, and refrigerant gauges. For homes with multiple systems, each system must be tested separately.

Standard Charge Measurement Procedure

The first step is to turn on the air conditioning system and let it run for at least 15 minutes in order to stabilize temperatures and pressures. While the system is stabilizing, the HERS rater or the installer may fit the instruments needed to take the measurements.

In order to have a valid charge test, the airflow must be verified. One option is to simultaneously perform the temperature split test. As an alternative, one of the three measurements in RA3.3 of the Reference Residential Appendix can be performed with a measured airflow in excess of 350 cfm/ton. If one of the optional tests is used, there is the potential for additional compliance performance credits.

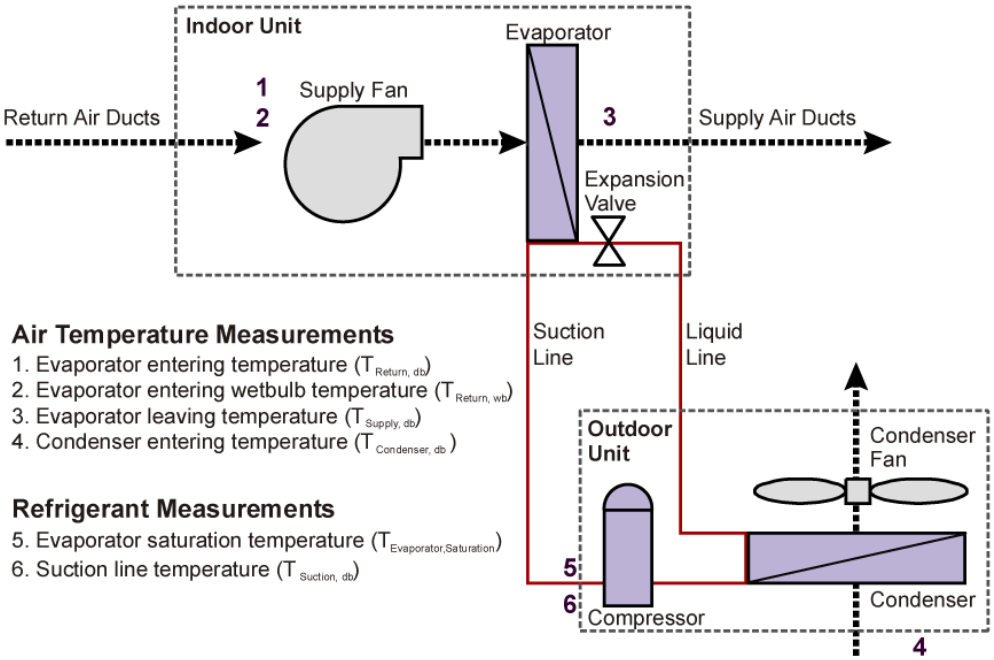

Figure 4-29 – Measurements for Refrigerant Charge and Airflow Tests

Mixed return air temperatures are measured in the return plenum before the blower. At the location labeled "Title 24 – Return Temperature Access" (see points 1 and 2 in Figure 4-29), both the drybulb and wetbulb temperatures are measured. The mixed supply air drybulb temperature is measured in the supply plenum downstream of the cooling coil labeled "Title 24 – Supply Temperature Access" (see point 3 in Figure 4-29). Finally the air temperature is measured where the air enters the outdoor condensing coil (see point 4 in Figure 4-29). It is important that the outdoor temperature sensor be shaded from direct sun.

In addition to the air temperature measurements, four refrigerant properties need to be measured. Two of these measurements are taken near the suction line service valve before the lines enter the outdoor unit (see points 5 and 6 in Figure 4-29). The first measurement is the temperature of the refrigerant in the suction line, which is taken by a clamp-on thermocouple insulated from the outdoor air. The second measurement determines the saturation temperature of the refrigerant in the evaporator coil. The saturation temperature can be read directly from a sensor permanently installed on the saturation region portion of the

evaporator coil (see Reference Residential Appendix RA 3.2.2.3) or can be determined from the low-side pressure and a saturation temperature table for the applicable refrigerant. There is a one-to-one relationship between saturation temperature and saturation pressure for a given refrigerant. Two refrigerant temperatures are measured near the liquid line service valve. The liquid refrigerant temperature is taken by a clamp-on thermocouple insulated from the outdoor air. The condenser saturation temperature can be read from a sensor permanently installed on the condenser coil (see Reference Residential Appendix RA 3.2.2.3) or can be determined from the high side pressure and a saturation temperature table for the applicable refrigerant.

Superheat Charging Method

The *Superheat Charging Method* is used on units with a fixed refrigerant metering device (not a TXV or EXV).

Unless an alternative airflow verification is used, the *Temperature Split Method* is performed simultaneously with the *Superheat Charging Method*.

Table 4-12– Structure of Target Superheat Temperature

		Return Air Wet-Bulb Temperature (°F) (T Return, wb)									
		50	51	52	53	54	55	..	..	75	76
Condenser Air Dry-Bulb Temperature (°F) (T condenser, db)	55	Target Superheat Temperatures = (Suction Line Temperature minus Evaporator Saturation Temperature) – See Reference Residential Appendix Table RA3.2-2									
	56										
	57										
	..										
	..										
	93										
	94										
	95										

Table 4-13 – Structure of Target Temperature Split

(Return Dry-Bulb minus Supply Dry-Bulb)

Complete table is in Reference Residential Appendix Table RA3.2-2

		Return Air Wet-Bulb Temperature (°F) (T Return, wb)									
		50	51	52	53	54	55	..	..	75	76
Return Air Dry–Bulb (°F) (T return, db)	70	Target Temperature Splits = (Return Dry Bulb Temperature minus Supply Dry Bulb Temperature) – See Reference Residential Appendix RA3.2-2									
	71										
	72										
	..										
	..										
	82										
	83										
	84										

The *Superheat Charging Method* involves comparing the measured superheat temperature to a target value from a table. The measured superheat temperature is the suction line temperature ($T_{Suction, db}$) minus the evaporator saturation temperature ($T_{Evaporator, Saturation}$). The target superheat target value is read from a table (see Table RA3.2-2 of the Reference Residential Appendix). For illustration purposes, the structure of the table is shown below as Table 4-13. If the actual superheat temperature and the target superheat value are within 5°F of each other, the system passes the required refrigerant charge criterion. If the actual superheat temperature exceeds the target superheat value by more than 5°F, then the system is undercharged. If the actual superheat temperature minus the target superheat value is between -5 and -100°F, then the system is overcharged. Only an EPA-certified technician may add or remove refrigerant.

Subcooling Charging Method

The *Subcooling Charging Method* is used on units with a variable refrigerant metering device (a TXV or EXV).

Unless an alternative airflow verification is used the Temperature Split Method is performed simultaneously with the Subcooling Charging Method.

The *Subcooling Charging Method* involves comparing the measured subcooling temperature to the target value supplied by the manufacturer. The measured subcooling temperature is the liquid line temperature ($T_{Liquid, db}$) minus the condenser saturation temperature ($T_{Condenser, Saturation}$). If the actual subcooling temperature and the target subcooling are within 3°F of each other, the system passes the required refrigerant charge criterion. If the actual subcooling temperature exceeds the target superheat value by more than 3°F, then the system is overcharged. If the actual subcooling temperature is more than 3°F below the target value, then the system is undercharged.

The Temperature Split Method

The rater and/or the installer must allow the system to run continuously for 15 minutes before performing the *Temperature Split Method* measurements. The

Temperature Split Method is performed simultaneously with the *Superheat Charging Method* or *Subcooling Charging Method*.

With the *Temperature Split Method*, the air temperature drop across the cooling coil is compared to a target value read from a table. This temperature drop is called the temperature split. The temperature split is the difference between the drybulb temperature in the return (entering the evaporator) and the drybulb temperature in the supply (leaving the evaporator).

Equation 4-4

Actual Temperature Split = $T_{Return, db} - T_{Supply, db}$

The Target Temperature Split depends on return air wet-bulb temperature ($T_{Return, wb}$) and return air dry-bulb temperature ($T_{Return, db}$). Table 4-13 shows the organization of the target temperature split table. The Reference Residential Appendix RA3.2 has the full Target Temperature Split table. If the actual and target are within plus 3°F and minus 3°F, then the system has sufficient airflow for a valid refrigerant charge test.

If the actual temperature split exceeds the target temperature split by more than 3°F, then airflow is inadequate and must be increased. Increasing airflow can be accomplished by eliminating restrictions in the duct system, increasing blower speed, cleaning filters, or opening registers. After the installer corrects the problem and verifies adequate airflow through the installer's own testing, the HERS rater repeats the measurements to verify a correct refrigerant charge and airflow.

If the actual temperature split is more than 3°F below the target temperature split, the measurement procedure must be repeated making sure that temperatures are measured where the airflow is mixed. If the re-measured numbers still show that the actual temperature split is more than 3°F below the target temperature split, then the system passes, but it is likely that the air conditioner is not producing the capacity it was designed to produce. There may be problems with this air conditioner. (It is possible, but unlikely, that airflow is higher than average).

Alternate Charge Measurement Procedure

With this method, the required refrigerant charge is calculated using the *Weigh-In Charging Method*, and adequate airflow across the evaporator coil is verified to be in excess of 350 CFM/ton using one of the three measurements in RA3.3 of the Reference Residential Appendix. The *Weigh-In Charging Method* is used only when the outdoor temperature is below 55°F.

EPA-certified technicians must perform the procedure, as follows:

- Calculate the refrigerant charge adjustment needed for refrigerant lines, which are longer, shorter, or of different diameter from the standard lineset for this air conditioner, and after properly evacuating the coil and lineset.
- By weight, add or remove the proper amount of refrigerant to compensate for the actual lineset length/diameter using the manufacturer's specifications for adjusting refrigerant charge for non-standard lineset lengths/diameters.

5 Water Heating Requirements

5.1 Overview

5.1.1 Water Heating Energy

Water heating energy use is an important end use in low-rise residential buildings. Roughly 90 percent of California households use natural gas fueled water heaters, typically storage gas units with tank volumes of 40 to 50 gallons. Standby loss associated with the center flue gas storage water heater design contributes 25-35 percent of a typical gas storage water heater system's annual energy use.

While natural gas, LPG or oil can be burned directly to heat water, electricity is typically generated in a fossil fueled power plant where approximately two-thirds of the energy used to produce the electricity is lost in the generation, transmission, and distribution processes. The Standards requires space conditioning and water heating systems to account for hourly usage impacts of the overall efficiency of each fuel type in the form of Time Dependent Valuation (TDV). Due to inefficiencies associated with generation and transmission electric TDV essentially precludes the use of standard electric water heaters. Electric heat pump water heaters, with significantly higher efficiencies than electric storage units, are closer to the efficiency of typical gas systems, even after accounting for TDV impacts.

The figure below shows the energy flows that determine water heating energy usage. On the right hand side, hot water draws at the end use points define a load pattern that is imposed on the hot water distribution system that delivers water from the heating device to the use points. The heating device must meet this recovery load minus any contribution from auxiliary heat inputs, such as a solar thermal system. Energy use for water heating encompasses all energy uses therefore considerations to issues such as standby losses from the water heater or supplemental storage, pump energy for recirculation systems, or impacts from supplemental heating must be considered in selecting a water heater that will comply.

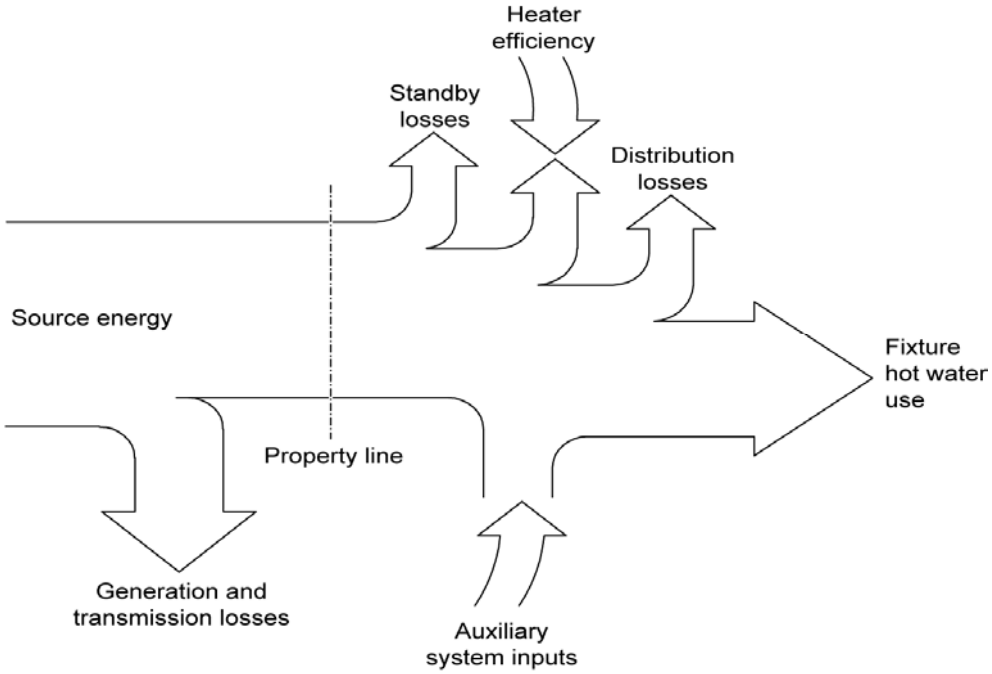

Figure 5-1 – Energy Flows for Water Heating

5.1.2 What's New for 2008

The key changes in water heating code from 2008 are listed below:

Instantaneous (or tankless) water heaters including gas, oil, small electric, and large instantaneous, indirect gas water heaters and hot water supply boilers will have their performance degraded to better account for the impacts of thermal cycling and small hot water draws on the heat exchanger that are not currently reflected in the Energy Factor test procedure. The Residential ACM Manual will derate tankless water heater performance by multiplying the rated EF by a 0.92 factor.

Parallel piping (or home run) systems that feature a manifold will require a 15 ft maximum pipe length between the water heater and the manifold. The design goal is to minimize this length since most of the water in a manifold system is upstream of the manifold. The 15 ft limit will eliminate excessive pipe lengths that contribute to poor manifold system performance.

Distribution system multipliers have been added or updated for several cases including:

- Piping installed below grade (both insulated and uninsulated)
- Demand recirculation systems (two control options are now available)
- Temperature buffering tank (a small electrically heated tank installed downstream of a tankless water heater to minimize supply temperature fluctuations)

For multi-family systems new requirements have been added to assure proper performance of water heaters. These measures include:

- Air release valve to prevent pump cavitating
- Check valves to prevent backflow
- Pump isolation valves to allow pump servicing
- Pump Priming valve to allow to allow air bleeding of the system

In addition to the new installation requirements changes have been made to allow for credit for central DHW monitoring and hourly demand controlled supply controls.

5.1.3 Water Heater Types

The following water heater types are recognized by the standards.

- Standard Water Heater - Storage Gas
- Large Storage Gas
- Storage Electric
- Heat Pump Water Heater with storage
- Instantaneous Gas
- Instantaneous Electric
- Boiler

5.1.4 Distribution System Types

The water heating distribution system represents the piping, pumps and controls that deliver hot water from the water heater to end-use points within the building. The assumed “standard” distribution system for a system serving a single dwelling unit is based on a trunk and branch design with no recirculation pumps and pipe insulation on the hot water line(s) running from the water heater to the kitchen fixtures and the first five feet of piping on the inlet and outlet from the water heater (see Mandatory Requirements).

The Standards recognize alternative distribution systems that may be more or less efficient than the standard system. Table 5-1 gives brief definitions for all of the recognized distribution system types serving a single dwelling unit.

Table 5-1 –Description of Distribution Systems within a Dwelling Unit

Distribution Systems	Description
Standard (STD)	Standard system without any pumps for distributing hot water. The first 5 ft of pipes from the storage tank is insulated for both hot and cold water pipes. Pipes from the water heater to the kitchen must be insulated per §150(j).
Pipe Insulation (PIA)	All hot water pipes are insulated per the requirements of §150(j).
Standard Pipes with no Insulation (SNI)	Standard distribution system (STD) with no pipe insulation on lines to the kitchen.
Point of Use (POU)	System with no more than 8 ft horizontal distance between the water heater and hot water fixtures, except laundry.
Parallel Piping (PP)	Individual pipes radiate from a manifold near the water heater to each of the fixtures.
Uninsulated Pipe Below Grade (UPBG)	Piping installed below grade (outside of conditioned space) with no insulation.
Insulated and Protected Pipe Below Grade (IPBG)	Piping installed below grade (outside of conditioned space) with insulation and a protective covering.
Recirculation No Control (RNC)	Distribution system using a pump to recirculate hot water though a hot water loop that serves the individual use points. Pump operation and water flow are continuous. Pipe insulation is required per §150(j).
Recirculation with Timer Control (RTm)	Recirculation system that uses a timer control to control pump operation based on time of day. Pipe insulation is required per §150(j).
Recirculation with Temperature Control (RTmp)	Recirculation system that uses a remote temperature sensor attached to the hot water return line to cycle pump operation to maintain water temperatures within certain limits. Pipe insulation is required per §150(j).
Recirculation with Timer and Temperature Control (RTmTmp)	Recirculation system that uses both temperature and timer controls to regulate pump operation. Pipe insulation is required per §150(j).
Recirculation with Manual Demand Control (RDmc)	Recirculation system that uses brief pump operation to recirculate hot water to fixtures when a demand for hot water is initiated with push button control activation. Pipe insulation is required per §150(j).
Recirculation with Motion Sensor Demand Control (RDmc)	Recirculation system that uses brief pump operation to recirculate hot water to fixtures when a demand for hot water is initiated with motion sensor control activation. Pipe insulation is required per §150(j).
Temperature Buffering Tank (TBT)	A distribution system with a small storage electric water heater installed in the distribution system.

There are separate distribution system definitions and requirements for water heating systems that serve multiple dwellings. The terms “Standard,” “Point of Use,” “Standard Pipes with No Insulation “and “Parallel Piping” do not apply to systems serving multiple dwellings. The term “Pipe Insulation” has a different meaning for central water heating systems than for systems serving a single dwelling unit. Piping for recirculation loops is required by the mandatory measures to be insulated, but a higher level of insulation can also save energy and is recognized by the compliance software programs.

Additionally, more information is required for demonstrating compliance of systems serving multiple dwelling units. The compliance documentation must specify the length of piping that is inside the building, outside, or underground, and the insulation R-value on each portion.

The base case system used to develop the standard budget for central water heating assumes a minimal amount of piping outside and none underground. It also assumes a recirculation pump with a timer control, and R-4 or R-6 insulation on the pipes (depending upon pipe diameter). The proposed system also is assumed to have a recirculation pump, but with whatever controls (or lack of them) that the user designates. An exception to this assumption is made for systems serving six or fewer dwelling units when no recirculation pump is installed.

5.1.5 Solar Water Heating Calculations

Solar water heating can be used as a tradeoff under the performance approach. So solar water heating is also required if prescriptive package C is used. Additionally, solar may be used in combination with an alternative water heater is performance is used to show equivalency with the standard water heater requirement in the prescriptive packages. The building standards use solar fraction (SF) to determine the impact of the solar water heating systems. The SF is the percent of the total energy required by the water heating system that is provided by the solar system. Note that systems used for compliance must have received a rating by the Solar Rating and Certification Corporation (SRCC). To calculate this value two options have been provided. The first approach uses the Solar Energy Factor (SEF) OG300 rating determined by the SRCC to rate predesigned solar water heating systems. To convert this value into a SF use the calculator located at this website: http://www.gosolarcalifornia.ca.gov/builders/swh_calc_systems.html.

The other option is to use the SRCC OG100 rating for collectors. When using this approach the designer selects the type and number of collectors, storage volume, as well as the tilt and orientation of the collectors. This approach should be used to be design systems for multifamily buildings. To use this approach go to the following website to download the calculator: http://www.gosolarcalifornia.ca.gov/builders/swh_calc_collectors.html.

5.2 Mandatory Requirements

5.2.1 Equipment Certification

§113(a)

Manufacturers must certify that their products comply with the Appliance Efficiency Regulations at the time of manufacture. Regulated equipment may not be sold in California unless certified. Regulated equipment includes the following types of water heaters:

- Gas or propane water heaters and boilers
- Heat pump water heaters
- Electric water heaters and boilers
- Oil-fired water heaters and boilers

5.2.2 Equipment Efficiency

§113(b), §111

Small water heaters are regulated by federal standards. The efficiency requirements for such equipment are given in Table 5-2 below. The efficiency rating for most residential water heaters is the energy factor (EF). The intent of the EF test procedure is to represent the overall annual efficiency of a water heater, combining the effects of recovery efficiency and standby losses. During the test, 64.3 gallons of hot water is withdrawn in six equal draws at one hour

intervals and then the water heater sits idle for the remaining 24 hour period. Set point temperatures and inlet temperatures are standardized for the test. The Energy Factor (EF) for water heaters other than heat pump water heaters varies between zero and one. Typical EF's for gas water heaters range from about 0.6 (gas storage) to 0.8 (instantaneous). Typical electric water heater EF's range from about 0.9 (electric storage) to over 2.0 (heat pump water heaters).

Table 5-2 – Minimum Energy Factor Small Water Heaters

Source: Energy Commission Appliance Efficiency Regulations, Table F-4 – Standards for Small Federally-Regulated Water Heaters

Type	**Size**	**Energy Factor (EF)**
Gas Storage	≤ 75,000 Btu/hr	0.67-(0.0019*V)
Gas Instantaneous	≤200,000 Btu/hr	0.62-(0.0019*V)
Oil Storage	≤105,000 Btu/hr	0.59-(0.0019*V)
Oil Instantaneous	≤210,000 Btu/hr	0.59-(0.0019*V)
Electric Storage (exc. Table top)	≤ 12KW	0.97-(0.00132*V)
Electric Table Top	≤ 12KW	0.93-(0.00132*V)
Electric Instantaneous (exc. table top)	≤ 12KW	0.93-(0.00132*V)
Heat pump Water Heater	≤ 24 Amps	0.97-(.00132*V
Note: V refers to tank volume (gal). Effective Date January 20, 2004		

The energy efficiency of equipment that is larger than the sizes indicated in Table 5-2, are regulated by the California Appliance Efficiency Regulations. Energy factor is not used for larger equipment, but rather minimums are specified for thermal efficiency and standby loss as shown in Table F-3 (see Appendix B).

It is not necessary to verify the minimum efficiency of new water heaters at the building counter when the prescriptive method is used, since this is an appliance standard and applies at the point of sale. Under the performance approach, water heater efficiency may be a factor in compliance. Therefore, when performance compliance is used, any water heater that has an efficiency rating higher than the minimal standard should be properly documented.

5.2.3 Pipe Insulation

§150(j)2 Pipe Insulation

Pipe insulation is a mandatory requirement in the following cases:

- Non-recirculating systems must have pipe insulation on both hot and cold water pipes for a length of five feet from the water heater, regardless of whether the piping is in conditioned space.
- The entire length of recirculating distribution sections of domestic hot water systems must be insulated, regardless of whether the piping is buried or exposed.
- Indirect fired domestic hot water system piping from the heating source to the storage tank.

Piping *exempt* from the mandatory insulation requirement includes:

- Factory installed piping within space conditioning equipment.

- Piping that penetrates framing members is not required to have insulation where it penetrates the framing. However, if the framing is metal then some insulating material must prevent contact between the pipe and the metal framing.
- Piping located within exterior walls other than for a recirculation loop, does not need to be insulated if all the requirements for Insulation Installation Quality are met (See Reference Residential Appendix RA4.4).
- Piping located in the attic does not need pipe insulation if it is continuously buried by at least 4 inches of ceiling insulation.
- Piping that serves process loads, gas piping, cold domestic water piping (other than within five feet of the water heater), condensate drains, roof drains, vents, or waste piping.

Other installation information:

- No insulation should be installed closer than 6 inches from the flue. If possible, bend the pipe away from the flue. Otherwise, it may be necessary to stop pipe insulation short of the storage tank (see *2007 California Mechanical Code*, Chapter 3, Table 3-3).
- All pipe insulation seams should be sealed.
- Installed piping may not be located in supply or return air plenums.
- Hot and cold water piping, when installed in parallel runs should be a minimum of 6 in. apart.
- If a fire wall interrupts the first 5 ft of pipe, the insulation may be interrupted at the wall and continued on the other side.
- Insulation for pipe elbows should be mitered and insulation for Tees should be notched.

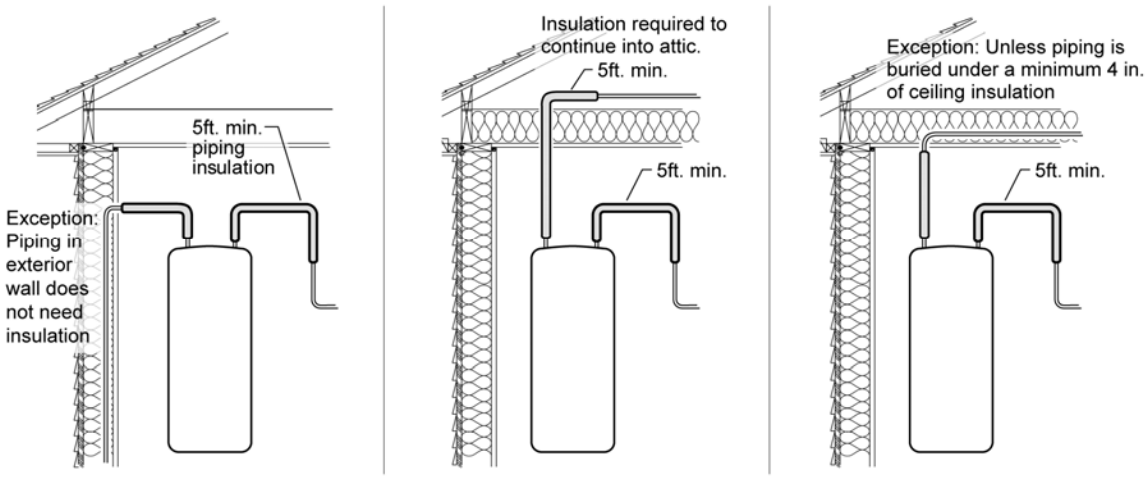

Figure 5-2 – Pipe Insulation Requirements First Five Feet from Water Heater

Standards Table 150-B

Where insulation is required as described above, one inch of R-4 insulation is typically required. This requirement applies to domestic hot water pipe (above 105° F) when the pipe diameter is 2 inches or smaller, the water temperature is between 105°F and 200°F, and the insulation conductivity between 0.24 and 0.28 Btu-in/hr-ft^2-°F (typical of cellular foam pipe insulation material). One and one half inch insulation is required on pipes greater than 2 inches.

5.2.4 Insulation Protection

§150(j)3

If hot water piping insulation is exposed to weather, it must be suitable for outdoor service. For typical cellular foam pipe insulation, this means protection with aluminum, sheet metal, painted canvas, plastic cover, or a water retardant paint coating that shields from solar radiation.

5.2.5 Certification of Showerheads and Faucets

§110(a)

Maximum flow rates are set by the Appliance Efficiency Regulations, and all faucets and showerheads sold in California must meet these standards. The limits for showerheads are 2.5 gallons per minute (gpm) at 80 psi water pressure. The limit for lavatory faucets and kitchen faucets is 2.2 gpm at 60 psi.

5.2.6 Storage Tank Insulation

§150(j)1 Tank Insulation

Exterior tank insulation is required in some cases to encourage water heater performance above the current federal minimum efficiency levels. A minimum R-12 tank wrap is a mandatory requirement for small storage water heaters, which have an input rating equal to or less than 75,000 Btus per hour that use gas, or propane water heaters and have an energy factor equal to the federal minimum level. Water heaters that exceed the minimum EF or large storage water heaters with a rated input greater than 75,000 Btu/h (these units are not rated with EF) are not required to have an external R-12 insulation blanket.

§113(c)4

Any unfired tanks (used as a back-up for solar water heating or as storage for a boiler) must either be insulated externally with R-12 or have a label indicating the tank is internally insulated with R-16. Alternatively, a tank can comply with this mandatory measure if calculations are provided that show that the average heat loss is less than 6.5 Btu/hr-ft^2 when there is a temperature difference of 80°F between the water in the tank and the ambient air.

5.2.7 Water Heating Recirculation Loops Serving Multiple Dwelling Units

§113(c)5

Multi-family building may have individual water heaters for each unit, but they are more likely to have a central water heating system with a recirculation loop that supplies each of the units. This recirculation loop is comprised of a supply portion, of larger diameter pipe connected to smaller diameter branches that serve multiple dwelling units, guest rooms, or fixtures and a return portion that completes the loop back to the water heating equipment. The large volume of water which is recirculated at least during period of high use creates situations that require the installation of certain controls and servicing mechanism to optimize performance and allow for lower costs maintenance.

Air Release Valves

§113(c)5A

The constant supply of new water and the operation of pumps create the possibility of the pumps cavitating because of the air in the water. Cavitation means that cavities or bubbles are forming in the liquid that we're pumping. These cavities form at the low pressure or suction side of the pump, causing several things to happen. The cavities or bubbles will collapse when they pass into the higher regions of pressure, causing noise, vibration, which may lead to damage to many of the components. In addition there is a loss in capacity and the pump can no longer build the same head (pressure). Ultimately the pumps' efficiency and life expectancy drops.

Cavitating can be minimized by either the installation of an air release valve or mounting the pump vertically. An inlet side of the recirculation pump, and for inspection purposed they must be no more than 4 ft from the pump. The air release valve must be mounted on a vertical riser with a length of at least 12 inches.

Backflow Prevention In Recirculation Loop

§113(c)5B

Temperature and pressure differences in the water throughout a recirculation system can create potentials for backflows. Backflow can result in either hot water flowing up cold water lines or where cold water flows up hot water lines.

To prevent this from occurring, the Standards require that a check valve or similar device be located between the recirculation pump and the water heating equipment.

Equipment For Pump Priming/Pump Isolation Valves

§113(c)5C&D

A large number of systems are allowed to operate until complete failure simply because of the difficulty of repair or servicing. By requiring specific measures to be included during initial construction, repair labor costs can significantly reduced. The measures which have been included to address this issue are equipment for pump priming and pump isolation valves.

To meet the pump priming equipment requirement a hose bib must be installed between the pump and the water heater. In addition an isolation valve shall be installed between the hose bib and the water heating equipment. This configuration will allow the flow from the water heater to be shut off allowing the hose bib to be used bleeding air out of the pump after pump replacement.

The requirement for the pump isolation valves will allow replacement of the pump without draining a large portion of the system. The isolation valves shall be installed on both sides of the pump. These valves may be part of the flange that attaches the pump to the pipe. One of the isolation valves may be the same isolation valve as in item C.

Connection of Recirculation Lines

§113(c)5E

While proper installation seems rather over simplified request the fact is that improper installations do occur. Manufacturer's specifications should always be followed to assure optimal performance of the system. The cold water piping and the recirculation loop piping should never be connected to the hot water storage tank drain port.

Backflow Prevention In Cold Water Supply

§113(c)5E

The dynamic between the water in the heater and the cold water supply are similar to those in the recirculation loop. Thermosyphoning can occur on this side of this loop just as it does on the recirculation side of the system. To prevent this, the Standards require a check valve to be installed on the cold water supply line. The valve should be located between the hot water system and the next closest tee on the cold water supply line. Note that the system shall comply with the expansion tank requirements as described in the California Plumbing Code Section 608.3.

5.2.8 Solar or Recovered Energy in State Buildings

§113(c)6

Low-rise residential buildings constructed by the State of California shall have solar water heating systems. The solar system shall be sized and designed to provide at least 60 percent of the energy needed for service water heating from site solar energy or recovered energy. There is an exception when buildings for which the state architect determines that service water heating is economically or physical infeasible. See the Compliance Options section below for more information about solar water heating systems.

Example 5-1

Question

Under what circumstances is a constantly (or continuously) burning pilot light prohibited on certain appliances?

Answer

For compliance with the building standards, §115 prohibits continuously burning pilot lights for some natural gas burning equipment (this does not include liquefied petroleum gas burning appliances). §115 prohibits continuous pilots on the following types of equipment:

- Household cooking appliances with an electrical supply voltage connection in which each pilot consumes 150 Btu/hr or more
- Pool heaters
- Spa heaters
- Fan type central furnaces

§150 (e) prohibits continuously burning pilot lights for:

- Fireplaces
- Decorative gas appliances
- Gas logs

Therefore water heaters may have a standing pilot light. This is allowed because the heat from the pilot helps maintain the water temperature in the tank.

Example 5-2

Question

I thought I was supposed to insulate hot and cold water piping from the water heater for either the first 5 ft or the length of piping before coming to a wall, whichever is less. Did I misunderstand?

Answer

Yes. The requirement is that you must insulate the entire length of the first 5 ft, regardless of whether there is a wall (§150(j)2). You have two options: (1) interrupt insulation for a fire wall and continue it on the other side of the wall, or (2) run the pipe through an insulated wall, making sure that the wall insulation completely surrounds the pipe. The reason for this requirement is that when heated, the water expands and pushes hot water out the cold water line. This can start thermosyphoning, which continues to remove heat from the stored water. The insulation helps reduce this effect.

Example 5-3

Question

When I'm insulating the pipes for a recirculating water-heating system, I understand that I must insulate the entire length of hot water pipes that are part of the recirculation loop. Do I also need to insulate the runouts?

Answer

No. Since the water in runouts does not recirculate, they do not need to be insulated.

5.2.9 Pool and Spa Equipment

Pool and Spa Overview

The mandatory requirements for pool and spa heating equipment are essentially the same as in the 2005 Standards. The 2008 Standards include many additional requirements for residential swimming pool filtration equipment which affect pump selection and flow rate, piping and fittings, and filter selection. These new Standards are designed to reduce the energy used to filter and maintain the clarity and sanitation of pool water.

Heating Equipment Requirements

Before any pool or spa heating system or equipment may be installed, the manufacturer must certify to the Energy Commission that the system or equipment complies with §114 and §115. The requirements include minimum heating efficiency according to Appliance Efficiency Regulations, an on-off switch outside the heater, permanent and weatherproof operating instructions, no continuous pilot light, and no electric resistance heating (see exceptions below).

§115

Pool and spa heaters may not have continuously burning pilot lights.

§114

Outdoor pools and spas with gas or electric heaters shall have a cover installed. The cover should be fitted and installed during the final inspection.

There are two exceptions for electric heaters, which may be installed for:

- Listed package units with fully insulated enclosures (e.g., hot tubs), and with tight-fitting covers, insulated to at least R-6.
- Pools or spas getting 60 percent or more of their annual heating from site solar energy or recovered energy.

Pool Pump Requirements

For maximum energy efficiency, pool filtration should be operated at the lowest possible flow rate for a time period that provides sufficient water turnover for clarity and sanitation. Auxiliary pool loads that require high flow rates such as spas, pool cleaners, and water features, should be operated separately from the filtration to allow the filtration flow rate to be kept to a minimum.

§150 (p)1

All pumps and pump motors shall comply with the specifications of the Appliance Efficiency Regulations.

The pool filtration flow rate may not be greater than the rate needed to turn over the pool water volume in 6 hours or 36 gpm, whichever is greater. This means that for pools of less than 13,000 gallons the pump must be sized to have a flow rate of less than 36 gpm and for pools of greater than 13,000 gallons, the pump must be sized using the following equation:

Max Flow Rate (gpm) = Pool Volume (gallons) / 360

These are maximum flow rates. Lower flow rates and longer filtration times are encouraged and will result in added energy savings.

Pools with auxiliary pool loads must use either a multi-speed pump or a separate pump for each auxiliary pool load. For example, if a spa shares the pool filtration system, either a multi-speed pump must be used or a separate pump must be provided to operate the spa. If the pool system can be served by one pump of less than 1 total-hp in capacity, the pump may be single speed.

Filtration pump motors with a capacity of 1 total-hp or more must be multi-speed.

All pool pumps sold in California must be tested and listed with the Energy Commission according to the Appliance Efficiency Regulations. Pump manufacturers must list flow rate, power, and energy factor at each of three system curves (see Figure 5-3). For pools equal to or less than 17,000 gallons, a pump must be chosen such that the flow rate listed for Curve A is less than the 6-hour turnover rate. For pools greater than 17,000 gallons, a pump must be chosen such that the listed flow rate at Curve C is less than the 6-hour turnover rate.

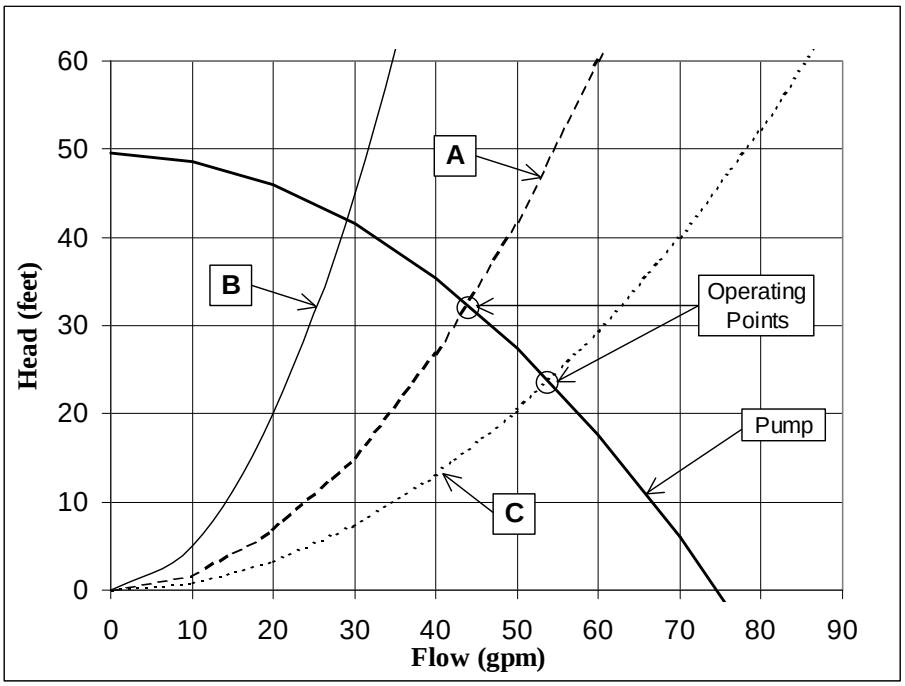

Figure 5-3 – System Test Curves

Pool Pump Controls

Pool controls are a critical element of energy efficient pool design. Modern pool controls allow for auxiliary loads such as cleaning systems, solar heating, and temporary water features without compromising energy savings.

§114(b)

A time switch or similar control mechanism must be installed as part of the pool water circulation control system that will allow all pumps to be set or programmed to run only during the off-peak electric demand period and for the minimum time

necessary to maintain the water in the condition required by applicable public health standards.

§150 (p)1

Multi-speed pumps must have controls that default to the filtration flow rate when no auxiliary pool loads are operating. The controls must also default to the filtration flow rate setting within 24 hours and must have a temporary override capability for servicing.

Pool Pipe, Filter, and Valve Requirements

System design for residential pools is new for 2008. Correct sizing of piping, filters, and valves reduces overall system head, reduces noise and wear, and increases energy efficiency. Other mandatory requirements include leading straight pipe into the pump, directional inlets for mixing, and piping to allow for future solar installations.

§114(b) and §150(p)2

Pool piping must be sized according to the maximum flow rate needed for all auxiliary loads. The maximum velocity allowed is 8 fps in the return line and 6 fps in the suction line. Table 5-3 shows the minimum pipe sizes required by pool volume based on a 6-hour turnover filtration flow rate. These pipe sizes would need to be increased if there are auxiliary loads that operate at greater than the filtration flow rate. Conversely, they could be reduced if the pump is sized for greater than a 6-hour turnover filtration flow rate.

Table 5-3 – 6-Hour Turnover Pipe Sizing

Pool Volume (gallons)		**Minimum Pipe Diameter (in)**	
Min	Max	Return	Suction
-	13,000	1.5	1.5
13,000	17,000	1.5	2
17,000	21,000	2	2
21,000	30,000	2	2.5
30,000	42,000	2.5	3
42,000	48,000	3	3
48,000	65,000	3	3.5

There must be a length of straight pipe that is greater than or equal to at least 4 inches pipe diameters installed before the pump. That is, for a 2 inch suction pump, there must be at least 8 inches of straight pipe before the pump's strainer basket.

Traditional hard 90 elbows are not allowed. All elbows must be sweep elbows or a type of elbow that has a pressure drop less than the pressure drop of straight pipe with a length of 30 pipe diameters. For example, a 2 inch elbow must have a pressure drop less than a 5-foot length of 2 inch straight pipe.

Field verification of sweep elbows may be performed by checking that the distance "w" of the installed sweep elbow is greater than that for a hard 90 elbow (refer to Figure 5-4). The difference in measurement between the radial edge of one sleeve to the perpendicular side of the elbow is found to be distinct between

sweep elbows and hard 90's. There is sufficient difference in distance "w" such that all sweep elbows exceed the minimum values listed in Table 5-4.

Figure 5-4 below illustrates "w" the dimension between the elbow sleeves and Table 5-4 shows the minimum distances "w" for an acceptable sweep elbow.

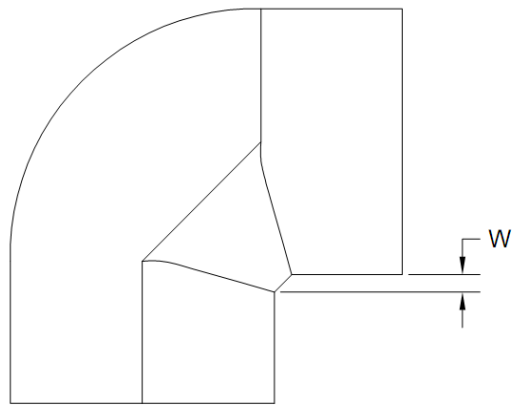

Figure 5-4 – Measuring "w" at the pool site.

Table 5-4 – Pool site measurement for sweep elbows

Pipe Diameter	Minimum W (in.)
1.5	3/8
2	1/2
2.5	5/8
3	3/4
4	1

Filters shall be sized using NSF/ANSI 50 based on the maximum flow rate through the filter. The filter factors that must be used are (in ft²/gpm):

Cartridge	0.375
Sand	15
Diatomaceous Earth	2

Backwash valves must be sized to the diameter of the return pipe or two inches, whichever is greater. Multiport backwash valves have a high pressure drop and are discouraged. Low-loss slide and multiple 3-way valves can provide significant savings.

The pool must have directional inlets to adequately mix the pool water.

If a pool does not currently use solar water heating, piping must be installed to accommodate any future installation. Contractors can choose three options to allow for the future addition of solar heating equipment:

- Provide at least 36 inches of pipe between the filter and the heater to allow for the future addition of solar heating equipment.
- Plumb separate suction and return lines to the pool dedicated to future solar heating.
- Install built-up or built-in connections for future piping to solar water heating. An example of this would be a capped off tee fitting.

Example 5-4

Question

My pool has both a solar heater and a gas heater. Do I need to install a pool cover?

Answer

Yes. A cover is required for all pools with gas or electric heaters, regardless of whether they also have a solar heater.

Example 5-5

Question

I have a 25,000 gallon pool and want to use a two-speed pump with a Curve C flow rate of 79gpm on high-speed and 39gpm on low-speed. Is this okay and what size pipe must I install?

Answer

The maximum filtration flow rate for a 25,000 gallon pool is 69 gpm so the pump is okay, as long as a control is installed to operate the pump on low-speed for filtration. The maximum pipe size must be based on the maximum flow rate, which is 79 gpm, so you must use 2.5 inch suction and 2 inch return piping.

5.3 Prescriptive Requirements

5.3.1 Pipe Insulation on Lines to Kitchen

§ 151(f)8 D

It is a prescriptive requirement that all hot water pipes run from the heating source to the kitchen fixtures be insulated. The amount of insulation required (typically one inch) is described above under mandatory requirements. Since this is a prescriptive requirement, it may be possible to comply without insulation if the water heating system as a whole meets the performance standard described in §151(b)1 or if the building as a whole complies under the performance method.

5.3.2 Systems Serving Individual Dwelling Units

Package D and E

§151(b)1 or 151(f)8

To meet the prescriptive requirements of Package D and E, systems serving individual dwelling units the water heater shall have a single gas, propane or oil storage type water heater with an input capacity less than or equal to 75,000 Btu/h or a single gas, propane or oil instantaneous water heater with an input capacity less than or equal to 200,000 Btu/h is also acceptable. Either of these water heaters can be combined with a standard trunk and branch distribution system with the kitchen pipes insulated. Acceptable alternative distribution systems that can be used for prescriptive compliance include parallel piping and on demand recirculation with manual controls. If the demand recirculation with manual controls is used a buffer tank cannot be installed. No other type of recirculation system may be used with prescriptive compliance unless performance compliance is used. Exterior tank insulation is only required for storage gas water heaters with an Energy Factor (EF) equal to the minimum federal standard.

The other option under the prescriptive compliance method is to meet the TDV energy budget for water heating as described in §151(b)1. This path requires a rather detailed calculation that is only practical using computer compliance programs. However, Table 5-5 shows a few alternative water heater systems that have been precalculated to comply when serving a single dwelling unit. These are only a few of many possible combinations that will comply.

Table 5-5 – Pre-approved Alternative Water Heating Systems for Single Dwelling Units (Equivalent to prescriptive requirement)

System Type	System Approved
Multiple (more than one) Instantaneous gas or propane with no pilot light and an energy factor of 0.85 or greater	YES
Heat pump water heater of 50 gallons or less with an energy factor of 2.5 or greater with a solar system contributing at least 25% of the total water heating requirements	YES
Two 50 gallon or less storage gas or propane fired units each with energy factor of 0.67 or greater and pipe insulation	YES
Storage gas of 50 gallons or less with an energy factor of 0.59 or greater with Parallel Piping	YES
Storage Gas of 50 gallons or less with an energy factor of 0.62 or greater with Demand Recirculation	YES
Storage Gas of 50 gallons or less with an energy factor of 0.58 or greater with time and temperature recirculation control and a solar system contributing at least 25% of the total water heating energy use	YES
50 Gal Electric with an energy factor of 0.94 or greater, pipe insulation and solar with at least a 60% solar fraction.	YES (only in areas where natural gas is not available)
Water Heater heat pump of 50 gallons or less with an energy factor of 2.5 or greater and pipe insulation	YES (only in areas where natural gas is not available)

Package C

If Package C is used for overall compliance, an electric water heater is permitted only if it meets the following requirements:

- Storage tank capacity is 50-gallon or less;
- Standard or point of use distribution system (non-recirculating);
- Water heater is located within the building envelope; and

- A solar system that provides at least 25 percent of the annual water heating requirements.

Example 5-6

Question

How do the Standards apply to a single family residence with a single 40-gallon gas water heater and norecirculating system?

Answer

This qualifies as a standard water heating system and complies automatically. No water heating calculations are required, although they may be performed to take credit for a particularly efficient water heater.

Example 5-7

Question

A 1,800 ft² single family residence has two identical 30-gallon gas storage tank water heaters and a point of use distribution system. Does this comply?

Answer

Because there are two water heaters, this system does not meet the standard prescriptive water heating systems requirements of §151(f)8. The system must be shown to meet the water heating budget of §151(b)1. The precalculated values in Table 5-5 above shows that if two 50 gallon water heaters where used with energy factors of 0.67 in combination with insulating the entire distribution systems would comply. It is very possible that the described system might meet the energy budget if performance was used.

Example 5-8

Question

A 6,000-ft² single family residence has 3 storage gas water heaters (40 gallon, 30 gallon and a 100-gallon unit with 80,000 Btu/h input). Does it comply?

Answer

A performance calculation is required since the system does not meet the standard requirements and must be shown to meet the water heating budget of §151(b)1.

Example 5-9

Question

A single family residence has one non-recirculating 50-gallon gas water heater. The water heater has an input rating of 76,000 Btu/hr. Does it comply?

Answer

Under the 2005 Standards this approach would have complied; however, since the input rating is greater than 75,000 Btu/hr the unit is not covered under the federal EF guidelines. For this system to demonstrate compliance, the performance method must be used.

5.3.3 Systems Serving Multiple Dwelling Units

To meet the prescriptive requirements, water heaters that serve multiple dwelling units must be gas, oil, or propane central recirculating systems. Any number of water heaters may be used and any size may be used as long as they are equipped with timer controls and meet the mandatory measure minimum efficiency requirements of §111 or §113.

Recirculating systems may be used as long as they have controls to turn off the pumps when hot water is not needed (e.g., timer controls). Pipes must be insulated as described earlier under mandatory requirements.

Any system not meeting these prescriptive requirements must instead meet the water heating performance budget as described in §151(b)1, or must follow the performance compliance method for the building as a whole. In this case, it is important to note a change in the Compliance Software calculations for 2005. Previously, the performance baseline was an individual water heater for each unit in a multifamily building, regardless of the proposed system configuration. In the 2005 standards, the baseline is a central water heating system whenever the proposed system serves multiple dwelling units. The result of this change is that the water heating budget will turn out to be more stringent than in the past for systems serving multiple dwellings.

Example 5-10

Question

A 10-unit multifamily building has separate gas water heaters for each dwelling unit. Five units have 30-gallon water heaters, and 5 units have 50-gallon water heaters. Does this comply?

Water heating calculations are not required if each system is non-recirculating and each water heater has a 0.58 or higher EF, because each dwelling unit has a standard water heating system.

Example 5-11

Question

We are building an 8-unit, 7,800 ft² multifamily building with a 200 gallon storage gas water heater with a time and temperature controlled recirculation system that has R-4 insulation on all the piping. The system serves all the units. Do I have to perform calculations to show compliance?

Answer

Water heating calculations are not needed because this system meets all the requirements of §151(f)8.

Example 5-12

Question

We are building a 10-unit apartment building with a single large water heater. We do not plan to install a recirculation pump and loop. Does this meet the Prescriptive requirements?

Answer

No. Since it is unlikely that a non-recirculating system will satisfactorily supply hot water to meet the tenants' needs, a recirculating system must be installed to meet the Prescriptive requirements. There is an exception for multifamily buildings of six units or less using the performance approach. For central hot water systems serving six or fewer dwelling units which have (1) less than 25 ft of distribution piping outdoors; (2) zero distribution piping underground; (3) no recirculation pump; and (4) insulation on distribution piping that meets the requirements of §150(j) , the distribution system in the Standard Design and Proposed design will both assume a pump with timer controls.

5.3.4 Pipe Insulation Below Grade

§151(f)8.E.

It is a prescriptive requirement that all hot water pipes run below grade must be insulated to the requirements of §150(j) and be installed in a waterproof and non-crushable casing or sleeve that allows for the installation, removal, and replacement of the enclosed pipe and insulation. Examples of acceptable casing materials include PVC and ABS pipe. Allowing for pipe removal implies the use of flexible hot water piping such as PEX. One exception to the insulation requirements of §150(j) involves island sinks commonly found in kitchens. In the case of island sinks, ½ inch wall thickness insulation within the casing material is acceptable for a maximum run length of 15 ft.

5.4 Compliance Options

5.4.1 Performance Compliance

The computer performance approach allows for the modeling of water heating system performance based on system type and efficiency, fuel type, distribution system type (and control options), and auxiliary systems that do not necessarily meet the prescriptive requirements.

5.4.2 Auxiliary Systems

The Water Heating Calculation Method allows water heating credits for solar water heaters. Solar systems save energy by using nondepletable resources to offset the use of conventional energy sources.

Solar Water Heaters

As noted earlier, solar water heating is a mandatory requirement for State built buildings. A solar system is required in meeting the Package C prescriptive requirements when an electric resistance water heater is installed. For all other buildings, a water heating credit is available for both passive and active solar water heating systems when following the performance compliance path.

For solar water heating systems, an approved method must be used to determine the Solar Savings Multiplier. Two calculation approaches may be used. To determine the solar contribution of a solar water heating system that has been

rated using the SRCC OG 300 procedure, use either form CF-SR which is located in Appendix A, or go to the Commission website at and download a spreadsheet form. For solar systems that are built up for single or multifamily buildings, a California version of F-chart is available at http://www.energy.ca.gov/title24/

Mandatory requirements for pipe insulation and storage tank insulation apply as described earlier in this chapter.

5.4.3 Combined Hydronic

Combined hydronic space heating systems utilize a single heat source to provide both space heating and domestic hot water. The system is evaluated for water heating performance as if the space heating function were separate. Section 4.7 provides an explanation of combined hydronic systems.

5.4.4 Distribution System Options

For systems serving individual dwelling units, the prescriptive requirement assumes pipe insulation on all hot water lines running from the water to the kitchen. This is a change from the 2005 Standards where only lines to the kitchen greater than or equal to ¾ in. in diameter are assumed to be insulated.

There are three distribution system alternatives (Point of Use, Pipe Insulation (all lines), and Demand Recirculation with Manual Control) that offer credits in the performance compliance approach for systems serving individual dwelling units. Several distribution system options are assumed to be equivalent with the prescriptive case including parallel piping, insulated and protected pipes below grade, and demand recirculation with motion sensor control. Finally, most recirculation options, uninsulated pipes below grade, and standard piping without insulation all incur a penalty in the performance approach.

For systems serving multiple dwelling units with a recirculating pump, extra credit is available for additional insulation, as well as for having all the piping inside the building envelope. The standard system is assumed to have R-4 insulation on piping up to 2 in., R-6 insulation on piping over 2 in. in diameter, no piping underground, and only 5 percent of the piping outside.

More detailed description of the eligibility criteria of the various distribution system options can be found in Reference Residential Appendix RA4.4 .

Example 5-13

Question

Can I get pipe insulation credit for a recirculating water-heating system?

Answer

Not for systems serving a single dwelling unit. Recirculating water heating systems have a mandatory insulation requirement for the recirculating section of the hot water pipes. Pipes less than 2 in. must be insulated to R-4 and pipes greater than 2 in. need R-6 insulation. For systems serving multiple dwelling units, using R-6 where R-4 is required, and R-8 where R-6 is required, results in credit within the performance approach. All the circulation loop pipes in one location type (e.g., inside, outside, underground) must be insulated to the higher level to qualify.

5.4.5 Instantaneous Gas Water Heaters

A PIER-sponsored evaluation of instantaneous (or tankless) gas water heaters was completed to assess whether the rated energy factor for these units accurately describes real world system performance. Results of the study indicate that the energy factor test procedure underestimates the impact of small volume hot water draws and heat exchanger cycling on annual system performance. Based on these findings, the 2008 Standards will apply a 0.92 derating factor on the nominal EF of all gas instantaneous water heaters.

Instantaneous gas water heaters may not be used in combination with a storage tank, regardless of the distribution system type. Depending on how the system is configured this combination can result either relatively high energy efficiency or may actually increase energy use substantially. Another reason for not allowing this combination is that the current modeling rules in the Compliance Software are not capable of properly modeling this configuration.

5.5 Compliance and Enforcement

Chapter 2 addresses the compliance and enforcement process in a general manner and discusses the roles and responsibilities of each of the major parties, the compliance forms, and the process for field verification and/or diagnostic testing. This section highlights compliance enforcement issues for water heating systems.

5.5.1 Design

The initial compliance documentation consists of the Certificate of Compliance (CF-1R) and the mandatory measures (CF-6R). These documents are included on the plans and specifications. The CF-1R has a section where special features are listed. The following are water heating features that should be listed in this section of the CF-1R, if they exist in the proposed design:

- Any system type other than one water heater per dwelling unit
- Non-NAECA large water heater performance
- Indirect water heater performance
- Instantaneous gas water heater performance
- Distribution system type and controls
- Solar system
- Combined hydronic system
- Any multifamily building with a central water heating and distribution system where some dwelling units are served by an individual water heater

5.5.2 Construction

During the construction process, the contractor and/or the specialty contractors complete the necessary sections of the Installation Certificate (CF-6R). For water heating there is only one section to be completed where information about the installed water heating system is entered.

Inspectors should check that the number and types of water heater systems indicated on the CF-6R, corresponds to the approved CF-1R. The distribution system is also significant and must correspond to plan specifications. For example:

- If a recirculation system is installed, verify that it was accounted for in the compliance documentation (CF-1R) and check for any required components and/or controls (e.g., pipe insulation, timer, push buttons for demand control recirculation system).
- If the water heating systems serves more than one dwelling unit, verify the total length of the distribution loop, the length of the loop in each of the three location types (inside, outside, underground), and the amount of insulation on the piping in each location.
- If a point of use credit is specified, the water heater must be no further than 8 ft (plan view) from all hot water use points, with the exception of washing machines.
- Verify that the make and model number of the installed water heater unit matches that listed on the Installation Certificate (CF-6R).
- Verify installation of a timer control or a time and temperature control on a multifamily building with central water heating and recirculating system.

For most central water heating distribution systems in multifamily buildings, any distribution systems for supplying hot water from a central boiler or water heater should be assumed to have a recirculation pump and assume that one would be supplied retroactively if not initially.

For central hot water systems serving six or fewer dwelling units that have:

- Less than 25 ft of distribution piping outdoors;
- Zero distribution piping underground;
- No recirculation pump; and
- Insulation on distribution piping that meets the requirements of §150(j), a pump and timer are not required to be installed. When calculating the energy use of these multifamily distribution systems, the distribution system in the Standard Design and Proposed design will both be assumed to have a pump with timer controls even when one is not installed.

5.5.3 Field Verification and/or Diagnostic Testing

The only element of a water heating system that requires field verification is where insulation credit is taken for hot water pipes located in the attic and buried

by ceiling insulation. In this case, a field inspector must verify that the Eligibility requirements for pipe insulation have been met.

5.6 Glossary/Reference

Relevant terms are defined in Reference Joint Appendix JA1.

The following are terms that are either not defined in JA1 or expansions to the Appendix I definitions.

Energy Factor (EF) of a water heater is a measure of overall water heater efficiency, as determined using the applicable test method in the Appliance Efficiency Regulations. EF is applicable for most residential water heaters with the criteria specified in the Appliance Efficiency Regulations. Typical gas storage water heaters have an EF of about 0.60, electric storage water heaters ~ 0.90, and gas instantaneous units ~ 0.80.

External tank insulation can be applied to the exterior of storage type water heater tanks. When installed, water heater insulation should be applied to completely cover the exterior of the water heater, but should not conceal controls or access ports to burners, obstruct combustion air openings, or interfere in any way with safe water heater operation. Insulation of top and bottom surfaces is not necessary.

Recovery energy is the energy used to heat water.

Recovery load is the load on the water heater due to hot water end uses and distribution losses.

Thermal efficiency is defined in the Appliance Efficiency Regulations as a measure of the percentage of heat from the combustion of gas or oil that is transferred to the hot water as determined using the applicable test methods.

5.6.1 Water Heater Types

Storage Gas. A gas water heater designed to heat and store water at less than 180°F. Water temperature is controlled with a thermostat. Storage gas water heaters have a manufacturer's specified storage capacity of at least 2 gallons and input capacity less than or equal to 75,000 Btu/h.

Large Storage Gas. A storage gas water heater with input capacity greater than 75,000 Btu/h.

Storage Electric. An electric water heater designed to heat and store water at less than 180°F. Water temperature is controlled with a thermostat. Storage electric water heaters have a manufacturer's specified storage capacity of at least two gallons.

Storage Heat Pump. An electric water heater that uses a compressor to transfer thermal energy from one temperature level to a higher temperature level for the purpose of heating water. It includes all necessary auxiliary equipment such as fans, storage tanks, pumps or controls. Energy Factors for heat pump water heaters are found in the Energy Commission’s Appliance Database under Certified Water Heaters.

Instantaneous Gas. A gas water heater controlled manually or automatically by a water flow activated control or a combination of water flow and thermostatic controls, with a manufacturer's specified storage capacity of less than 2 gallons. Most gas tankless units, as they are more commonly called, have modulating output capacity and spark ignition.

Instantaneous Electric. An electric water heater controlled automatically by a thermostat, with a manufacturer's specified storage capacity of less than 2 gallons.

Note: Instantaneous water heaters are not generally designed for use with solar water heating systems or as heat sources for indirect fired water heaters. They are also typically inappropriate for use with recirculation systems. Consult manufacturer's literature when considering these applications.

Indirect Gas. A water heater consisting of a storage tank with no heating elements or combustion devices, connected via piping and recirculating pump to a heat source consisting of a gas or oil fired boiler, or instantaneous gas water heater (see note following the definitions of Instantaneous Gas and Electric).

As described above in the section on Mandatory Requirements, the storage tank must be insulated in accordance with §150(j)1B, which requires a factory-installed minimum of R-16 (labeled on outside of tank) or a minimum of R-12 external insulation.

The piping connecting the heating source and the storage tank must also meet the mandatory requirements, typically one inch of R-4 insulation. This includes any piping located in concrete slabs or underground.

5.6.2 Distribution Systems

The water heating distribution system is the configuration of piping (and pumps and controls in the case of recirculating systems) that delivers hot water from the water heater to the end use points within the building. The water heating performance method provides credits for energy-efficient distribution systems, while assigning penalties for less energy-efficient systems.

Standard Distribution System

Systems Serving Single Dwelling Units

A standard distribution system serving a single dwelling unit is defined as a trunk and branch system that does not incorporate a pump for hot water recirculation, and does not take credit for any design features eligible for energy credits. As per the prescriptive requirements, all pipes running to the kitchen must be insulated to meet the requirements of a standard distribution system.

Installation Criteria

No pumps may be used to recirculate hot water. The first 5 ft of hot and cold water piping adjacent to the water heater must be insulated according to mandatory requirements.

Systems Serving Multiple Dwelling Units

The standard distribution system for water heaters serving multiple dwelling units incorporates a recirculation pump, controls to shut the pump off when it is not needed, and insulation on all portions of the recirculation loop. As required by the prescriptive approach, the piping to the kitchen must also be insulated.

Standard Pipes with No Insulation

This case is the same as the standard distribution system defined above, except that the hot water lines to the kitchen are not insulated.

Point of Use

A point of use distribution system design minimizes the volume of water between the water heater and the hot water use points. This credit is not applicable to systems serving multiple dwelling units.

Installation Criteria

The distance between the water heater and any fixture using hot water cannot exceed 8 ft, measured in plain view (see Figure 5-5).

All water heaters and hot water fixtures must be shown on plans submitted for local building department plan check.

Exception: Washing machines for clothing may be located more than 8 ft from the water heater.

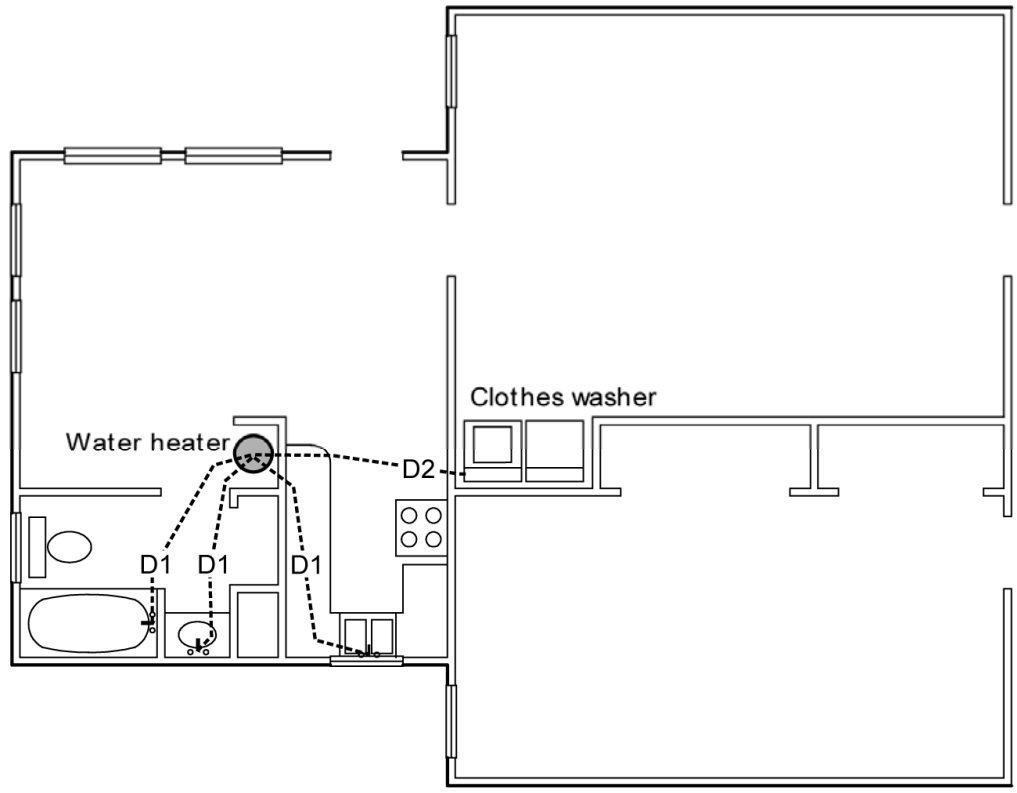

D1 (distance between water heater and hot water fixture) ≤ 8'-0"

D2 (distance between water heater and clothes washer ≥ 8'-0"

Figure 5-5 – Point of Use Distribution System

Pipe Insulation

For systems serving a single dwelling unit, the pipe insulation credit applies only to non-circulating systems. For systems serving multiple dwelling units, there is a pipe insulation credit for recirculating piping external to dwelling units if pipes are insulated to a higher R-value than the mandatory minimum.

Installation Criteria (Single Dwelling Unit)

Insulation must meet the level required in the mandatory requirements. Note that pipes buried under ceiling insulation can meet the mandatory requirements.

Note: Heat tape – electric resistance heating tape wrapped around hot water pipes – may be used only for freeze protection and cannot be used instead of mandatory pipe insulation (see §150(j)) or pipe insulation receiving distribution credit.

Installation Criteria (Multiple Dwelling Units)

All piping in the same location type (inside, outside, or underground) must be insulated to at least R-6 for pipes up to 2 in. in diameter, or R-8 for pipes larger than 2 in. in diameter.

Pipe insulation for piping located underground or in a slab must be protected by a material that is resistant to compression and crushing so that the insulation value is maintained after installation of covering materials.

Parallel Piping

The intent of a parallel piping, or manifold, distribution system is to minimize the volume of water entrained in piping between the water heater and the end use points. This system typically has a ¾ or 1 inch line from the water heater to a manifold which then feeds individual hot water use points with 3/8 or ½ inch plastic (e.g. PEX) tubing.

Credit for Parallel Piping can only be used if each hot water use point (each kitchen, each bathroom and each laundry area) has a separate distribution line with a maximum size of half-inch pipe run from the location of the water heater to each hot water use location. This credit does not apply to systems serving multiple dwelling units.

Installation Criteria

The 2008 Standards specify a maximum 15 foot pipe length from the water heater to the manifold (minimizing this length further is highly advantageous as most of the water in a parallel piping system is located upstream of the manifold). In addition, the hot water line feeding the manifold must be insulated to R-4. Piping from the manifold must take the most direct path to the use point. In homes with two or more stories, piping serving first floor use points must not go above the second floor. See Reference Residential Appendix RA4.4 for detailed criteria.

Recirculation System – No Control

A distribution system without controls in which the pump continually recirculates hot water though a recirculation loop. The “no control” recirculation strategy is the most energy inefficient of the recirculation strategies.

Installation Criteria

All piping used to recirculate hot water must be insulated to meet the mandatory requirements (§150(j)). This includes any recirculating piping located in concrete slabs or underground. Since the Standards require pipe insulation for recirculating systems, these systems are not eligible for the Pipe Insulation credit. For systems serving a single dwelling unit, the recirculating loop within a dwelling unit must be laid out to be within 8 ft of all hot water fixtures served by the recirculating loop. As with all recirculation systems, an intelligent loop layout (loop in-board of hot water use points) and proper insulation installation is essential in obtaining desired performance.

Recirculation System – Temperature Control

Recirculation system control option that uses a return line temperature sensor to control the recirculating pump to maintain return water temperatures within certain limits.

Installation Criteria

All criteria listed for continuous recirculation systems apply.

An automatic thermostatic control must be installed to cycle the pump on and off in response to a temperature sensor installed on the water heater return line. Minimum differential or "deadband" of the control shall not be less than 20°F. In this case, the pump may run continuously.

Plans must indicate pump and temperature control.

Recirculation System – Timer Control

A recirculation system that uses a timer control to cycle pump operation based on time of day.

Installation Criteria

All criteria listed for continuous recirculation systems apply.

A timer must be permanently installed to regulate pump operation. Timer setting must cycle the pump off for at least eight hours every day.

Plans must indicate pump and timer control.

Recirculation System – Timer and Temperature Control

A recirculation system that uses both temperature and timer controls to regulate pump operation, so that the pump is cycled off during periods when the return line water temperature exceeds the minimum temperature, as well as for the eight hour timer lockout period.

Installation Criteria

All criteria listed for continuous, temperature controlled, and timer controlled recirculation systems apply.

Recirculation System – Demand Control

A recirculation system that uses brief pump operation in response to a hot water demand signal to circulate hot water through the recirculation loop. The system must have a remote temperature sensor, typically located at the most remote point of the recirculation loop that terminates pump operation when the sensed temperature rises. Typical control options include manual push button controls or occupancy sensor controls. Push button control is preferred from a performance perspective, since it will eliminate “false signals” for pump operation that an occupancy sensor will generate.

Installation Criteria

All criteria listed for continuous recirculation systems apply.

Pump start-up must be provided by a push button, occupancy sensor or flow switch.

Pump shut-off must be provided by either a temperature sensing device that shuts off the pump when hot water reaches the location of use, or by a timer which limits pump run time to two minutes or less.

For a system serving a single dwelling, push buttons and sensors must be installed in all locations with a sink, shower, or tub, with the exception of the laundry room.

Plans must include a wiring/circuit diagram for the pump and timer/temperature sensing device and specify whether the control system is manual (push button or flow switch) or other control means, such as occupancy sensor.

Temperature Buffering Tank

Temperature buffering tanks are small storage tanks (typically less than 5 gallons) that are installed downstream of the water heater. In most cases, these tanks are installed with instantaneous (tankless) gas water heaters to address the “cold sandwich” problem that may occur.

Installation Criteria

The tank setpoint should be set below 110°F.

5.6.3 Pool and Spa Equipment

Flow Rate. Flow rate is the volume of water flowing through the filtration system in a given time, usually measured in gallons per minute.

Nameplate Power. The nameplate power is the motor horsepower listed on the nameplate and the horsepower by which a pump is typically sold.

Pumps. Pool pumps usually come with a leaf strainer before the impeller. The pumps contain an impeller to accelerate the water through the housing. The motors for residential us pumps are included in the pump purchase but can be replaced separately. The pumps increase the “head” and “flow” of the water. Head is necessary to move fluid through pipes, drains, and inlets, push water through filters and heaters, and project it through fountains and jets. Flow is the movement of the water used to maintain efficient filtering, heating, and sanitation for the pool.

Return. The return refers to the water in the filtration system returning to the pool. The return lines or return side, relative to the pump, can also be defined as the pressure lines or the pressure side of the pump. Water in the returns is delivered back to the pool at the pool inlets.

Service Factor. The service factor rating indicates the percent above nameplate horsepower at which a pump motor may operate continuously when full rated voltage is applied and ambient temperature does not exceed the motor rating. Full-rated pool motor service factors can be as high as 1.65. A 1.5 hp pump with a 1.65 service factor produces 2.475 hp (total hp) at the maximum service factor point.

Suction. Suction created by the pump is how the pool water gets from the skimmers and drains to the filtration system. The suction side and suction lines refer to the vacuum side of the pump. It is at negative atmospheric pressure relative to the pool surface.

Total Dynamic Head. Total dynamic head, or TDH, refers to the sum of all the friction losses and pressure drops in the filtration system from the pools drains and skimmers to the returns. It is a measure of the system’s total pressure drop

and is given in units of either psi or feet of water column (sometimes referred to as “feet” or “feet of head”).

Total Motor Power. Total motor power, or T-hp, refers to the product of the nameplate power and the service factor of a motor used on a pool pump.

Turnover. A turnover is the act of filtering one volume of the pool.

Turnover Time (also called Turnover Rate). The time required to circulate the entire volume of water in the pool or spa through the filter. For example, a turnover time of 6-hours means an entire volume of water equal to that of the pool will be passed through a filter system in six hours.

$$\text{Turnover Time} = \frac{\text{Volume of the pool}}{\text{Flow rate}}$$

6 Lighting

6.1 Overview

6.1.1 Introduction and Scope

This chapter is a one-stop place where a builder, contractor, or lighting designer can get the information they need about residential lighting in low-rise buildings and in the dwelling units of high-rise buildings.

For residential buildings, all of the lighting requirements are mandatory measures. Therefore, lighting energy is not part of the energy budget for the whole building performance method, except as part of the standard assumption on internal heat gains that is assumed to be the same for all buildings. There are no tradeoffs between lighting and other building features.

The lighting requirements apply to alterations and additions (including replacements) as well as newly-constructed buildings. All new luminaires that are permanently installed must meet the requirements of §150(k), but existing luminaires may stay in place.

6.1.2 Summary of the Residential Lighting Standards

The Residential Lighting Standards apply only to permanently installed luminaires, i.e., luminaires that are attached to the house, as opposed to portable luminaires such as torchieres or table lamps that are provided by the occupant. Permanently installed luminaires include ceiling luminaires, chandeliers, vanity lamps, wall sconces, under-cabinet luminaires, and any other type of luminaire that is attached to the house. Permanently installed luminaires may include hard wired or plug-in luminaires. See Section 6.2.6 below for additional information about permanently installed luminaires.

Each permanently installed luminaire is affected by the Standards, and must be classified as either high efficacy or low efficacy. See Sections 6.2.1 and 6.2.2 for additional information about high efficacy and low efficacy luminaires.

The installed wattage of permanently installed luminaires must be considered only in kitchens. For each room or area, the requirements may be summarized as follows:

- **Kitchens.** At least half the installed wattage of luminaires in kitchens shall be high efficacy. However, some lighting installed inside a cabinet may not be included in the wattage calculation that determines half of the installed wattage is high efficacy. See Section 6.4 for information about residential kitchen lighting requirements.

- **Bathrooms, Garages, Laundry Rooms, Closets and Utility Rooms.** All luminaires shall either be high efficacy or shall be controlled by a vacancy sensor. Closet that are less than 70 ft² are exempt from this requirements. See Section 6.5 for information about residential lighting requirements in these rooms.
- **Other Rooms.** This applies only to rooms that are not kitchens, bathrooms, garages, laundry rooms, closets, or utility rooms. All installed luminaires shall either be high efficacy or shall be controlled by a vacancy sensor or dimmer. See Section 6.6 for information about residential lighting requirements in these rooms.
- **Outdoor Lighting.** All luminaires mounted to the building or to other buildings on the same lot shall be high efficacy luminaires or shall be controlled by a motion sensor in combination with a photocontrol, astronomical time clock, or energy management control system (EMCS). See Section 6.7 for information on residential outdoor lighting requirements.
- **Interior Common Areas of Multifamily Buildings.** All interior luminaires in the common areas of multifamily buildings shall either be high efficacy or shall be controlled by an occupant sensor. See Section 6.9 for information about residential lighting requirements for interior common areas of multifamily buildings.

The Residential Lighting Standards also have requirements for electronic ballasts (Section 6.2.5), permanently installed night lights (Section 6.2.7), lighting integral to exhaust fans (Section 6.2.8), and lighting switching requirements (Section 6.3).

Luminaires that are recessed into insulated ceilings are required to be rated for insulation contact ("IC-rated") so that insulation can be placed over them. The housing of the luminaire shall be airtight to prevent conditioned air escaping into the ceiling cavity or attic, or unconditioned air infiltrating from the ceiling or attic into the conditioned space. See Section 6.10 for additional information on luminaires recessed into insulated ceilings.

An additional set of requirements apply to parking lots or garages with space for eight or more cars, which are typically for multifamily buildings. The Nonresidential Lighting Standards for parking lots and/or garages apply in these cases (§132, §147). See Section 6.8 for additional information about Residential Lighting Standards for parking lots or garages with space for eight or more cars.

6.1.3 High-Rise Residential Dwelling Units and Hotel/Motel Guest Rooms

§130(b) and (c)

The Residential Lighting Standards apply to dwelling units in high-rise residential and hotel/motel guest rooms as follows:

The design and installation of all lighting systems, lighting controls and equipment in high-rise residential dwelling units and in hotel/motel guest rooms shall comply with the applicable provisions of §150(k).

Indoor lighting in high-rise residential lighting and hotel/motel buildings for areas which are not in dwelling units must comply with the applicable Nonresidential

Indoor Lighting Standards. See Section 1.7.4 of the Nonresidential Compliance Manual for additional information on mixed use buildings.

Outdoor lighting that is permanently attached to the building, and is separately controlled from the inside of a high-rise residential dwelling unit or guest room shall comply with the applicable requirements of §150(k).

Outdoor lighting that is permanently attached to the building, but is not separately controlled from inside of a high-rise residential dwelling unit or guest room shall comply with the applicable Nonresidential Outdoor Lighting Standards.

Signs that are not inside the dwelling units of high-rise residential living quarters and in hotel/motel guest rooms shall comply with the applicable Sign Lighting Standards in §133 and §148.

6.1.4 Fire Stations

Many fire stations are mixed use buildings, having some function areas that are clearly nonresidential and other function areas that are clearly used for staff housing. The staff housing areas may be occupied 24 hours per day, except when staff is out on an emergency call. The nonresidential function areas are required to meet the applicable Nonresidential Lighting Standards. The staff housing areas shall comply with the applicable provisions of §150(k).

6.1.5 Related Documents

There are a number of publications and documents available from the California Energy Commission and others that provide additional information about residential lighting. A summary of these is listed below:

- The Nonresidential Manual should be consulted for more details on the requirements for parking lots and parking garages.
- The Residential Lighting Design Guide, (Best practices and lighting designs to help buildings comply with California's 2005 Title 24 energy code) is available from the California Lighting Technology Center (www.CLTC.ucdavis.edu). While this document is written for the 2005 Standards, much of the information is still relevant for the 2008 Residential Lighting Standards.
- The Advanced Lighting Guidelines, available from the New Buildings Institute (http://www.newbuildings.org) is an informative resource for energy efficient lighting design, luminaires, and controls. While the document is mostly oriented for nonresidential lighting applications, it has generic information about lamps, ballasts, luminaires, and controls that is applicable to low-rise residential buildings.
- Professionally qualified lighting designers can be quickly located via the websites of the International Association of Lighting Designers (http://www.iald.org/index), or the National Council on Qualifications for the Lighting Professions (NCQLP): http://www.ncqlp.org). Many designers are ready to offer informal advice as well as undertake commissioned work.

- Many books on residential lighting design are available. The best books explain the principles of good lighting design as well as showing examples of luminaires. The fast pace of lamp development makes recently written books much more useful.
- Guidance on the selection and use of lighting technologies is available from the Lighting Research Center's National Lighting Product Information Program, at www.lrc.rpi.edu/programs/nlpip. Additional resources for energy efficient lighting and other building systems are available from the California Building Industry Institute at http://www.thebii.org.

6.2 Luminaires

A luminaire is the lighting industry's term for light fixture. A luminaire consists of the housing, power supply (including ballast or transformer), lamp, reflector, and in some cases a lens. A lamp is the lighting industry's term for a light bulb. Luminaires can be designed to be recessed into the ceiling, suspended by a rod, cable, or chain, surface mounted on the wall or ceiling, or attached to a cabinet. Portable table and floor lamps are also classified as luminaires, but they are not covered by the Residential Lighting Standards. Every installed luminaire shall be classified as either high efficacy or low efficacy for compliance with the Residential Lighting Standards. The rules for classifying a luminaire as high efficacy are explained further in Sections 6.2.1 and 6.2.3.

6.2.1 High Efficacy Luminaires

§150(k)1

High Efficacy Luminaire. A high efficacy luminaire is one that meets the efficacies listed in Table 150-C of the Standards (shown as Table 6-1 and Table 6-2 in this chapter), contains only high efficacy lamps or high efficacy LED lighting, and must not contain a socket which allows any low efficacy lighting system to be used. For example, any luminaire containing a medium screw base socket is classified as low efficacy, regardless of the type of lamp installed into that socket.

Typically, high efficacy luminaires contain pin-based sockets, like compact fluorescent or linear fluorescent lamp sockets, though other socket types such as screw sockets specifically rated only for high intensity discharge lamps (like metal halide lamps) light emitting diode (LED) luminaires (dedicated LED lighting fixtures that cannot use incandescent or any other type of lighting technology) may also qualify as high efficacy. Additional information about qualifying HID luminaires or LED lighting as high efficacy is discussed below.

High Intensity Discharge (HID) lighting is primarily used in nonresidential applications. It is most often used for street, parking lot, indoor warehouse, and retail display lighting. When HID lighting is used for residential applications, it is typically used outdoors. Two types of HID lighting are high pressure sodium, which gives off an amber color light, and metal halide, which gives off a cool white light. The Residential Lighting Standards do not disallow HID lighting to be used indoors, but this technology is typically considered too bright for residential indoor use, and currently, the technology requires significant warm up time before reaching full light output.

Exception 1 to §150(k)2A

HID luminaires containing factory installed ballasts and HID rated medium screw base sockets may be classified as high efficacy luminaires provided they meet the efficacies listed in Table 150-C of the Standards (shown as Table 6-1 and Table 6-2 in this chapter).

Exception 1 to §150(k)1

An HID luminaire rated for use only with a HID reflector lamp shall have a minimum lamp efficacy within 2 lumens per watt of the minimum lamp efficacies in Table 150-C.

Induction Lighting combines induction and gas discharge lighting technologies, mostly used as an alternative to outdoor HID lamps. Induction lamps do not contain electrodes, and the lighting system is comprised of three components; a generator, power coupler, and the lamp. Induction lamps have relatively long lives.

GU-24. A relatively new type of line-voltage socket is the GU-24. The definition of GU-24 is in §101. Compact fluorescent lamps and LED lamps have recently been introduced into the market with GU-24 bases.

Exception 2 to §150(k)2A

A luminaire with a line-voltage socket is classified as low efficacy according to the Residential Lighting Standards; however, there is an exception which allows luminaires with a GU-24 socket to qualify as high efficacy. A luminaire with a factory installed GU-24 lamp holder may be classified as high efficacy provided that it meets all of the following requirements:

1. The luminaire is not a recessed downlight rated to be used with a compact fluorescent lamp; and
2. The luminaire does not contain any other type of line-voltage socket or lamp holder (for example, the luminaire cannot use any screw-based lamps, including screw-based incandescent, screw-based fluorescent, or screw-based LED lamps); and
3. The manufacturer does not make available adaptors or other modular components for the luminaire which will convert the GU-24 lamp holder to any other type of socket or lamp holder; and
4. The luminaire is rated for use only with high efficacy lamps or a high efficacy LED lighting source system, according to Table 150-C of the Standards (shown as Table 6-1 and Table 6-2 of this chapter).

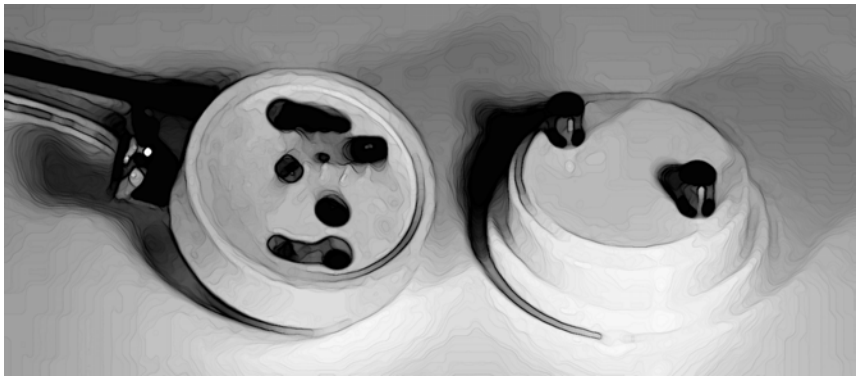

Figure 6-1 – GU-24 socket and base

§119(m); Table 150(c)

LED Certification Requirements. Light emitting diode (LED) lighting may qualify as either high efficacy or low efficacy. To qualify as high efficacy, an LED lighting source system, including fully integrated LED luminaires and LED trims, must be certified to the Energy Commission. Additional information about certifying LED luminaires to the Energy Commission is in Section 6.2.9. For additional information about LED lighting see Section 6.2.10.

§130(d); §150(k)1; Table 150-C

High Efficacy LED Trims. The two most common types of LED lighting available today are fully integrated LED luminaires, and LED "trims." There are also a few screw-based and pin-based LED lamps (bulbs) available, such as PAR and BR style LED lamps, as well as MR-16 style LED lamps. However, because these LED screw-based and pin-based lamps are interchangeable with low efficacy lamps, they do not qualify a luminaire as high efficacy for compliance with the Residential Lighting Standards.

An LED trim is a one-piece integral unit containing the power supply, transformer, heat sink, and LED circuit board, which is designed to be installed into a recessed luminaire housing.

Many manufacturers of LED trims do not manufacture their own luminaire housing, but rather install their LED trims into luminaire housings manufactured by another company. These third-party luminaire housings are typically classified as low efficacy according to Residential Lighting Standards.

Following is an alternate method, approved in accordance with §130(d), for determining the wattage of LED trims. This method for classifying LED trims as high efficacy applies only to LED trims, and shall not be applied to determining wattage for compact fluorescent or other lighting technologies.

The installation of an LED trim may be classified as a high efficacy luminaire provided that all of the following conditions are met:

1. The LED trim shall be certified to the Energy Commission as high efficacy according to Table 150-C of the Standards (shown as Table 6-1 and Table 6-2 of this chapter). Additional information about certifying LED lighting as high efficacy is in Section 6.2.9; and
2. The LED trim shall be hardwired directly to the luminaire housing. The wiring assembly may include a mid-line connector between the LED trim and the wire ends. The mid-line connector may be a GU-24, or other type of connector, but is shall not include a screw-base socket configuration; and
3. The luminaire housing shall not contain a screw-base socket; and
4. Screw-base adaptors shall not be used, even if the manufacturer considers them to be “permanent”; and
5. If the LED trim provided by the manufacturer has a screw-base attached to the end of a “pig-tail”, the screw-base must be cut off and discarded prior to hard wiring the trim directly into the luminaire housing. However, check any UL restrictions on such modifications.

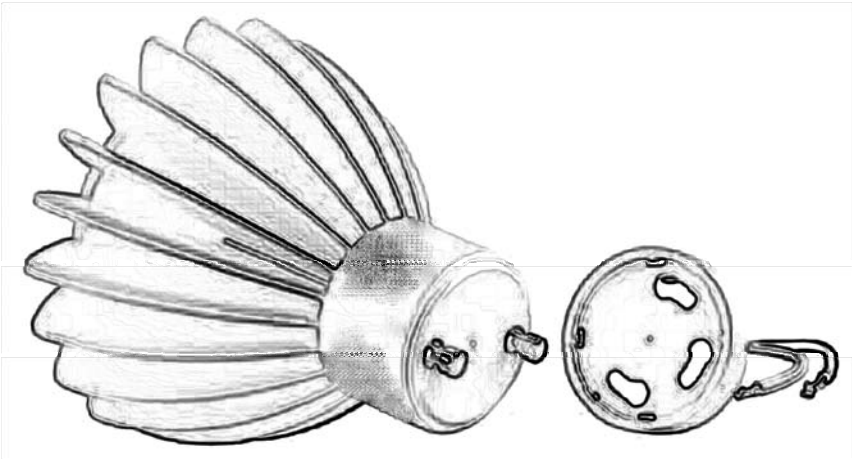

Figure 6-2 – One type of LED trim with GU-24 base

§101 definitions

Hybrid LED Luminaire. A hybrid LED luminaire contains an LED source system as well as another type of light sources, such as incandescent or fluorescent lighting system. A hybrid LED luminaire is defined as a complete lighting unit consisting of a light source and driver together with parts to distribute light, to position and protect the light source, and to connect the light source to a branch circuit. The hybrid LED luminaire is intended to be connected directly to a branch circuit.

§150(k)1; Table 150-C

When an LED source system has been certified to the Energy Commission as high efficacy, and the other light source in the hybrid luminaire also qualifies as high efficacy according to Table 150-C of the Standards (shown as Table 6-1 and Table 6-2 of this chapter), the entire luminaire may be classified as high efficacy for compliance with the Residential Lighting Standards.

Exception 2 to §150(k)1

However, when a high efficacy LED source system is combined with a low efficacy lighting system in a Hybrid LED Luminaire, the high efficacy and low efficacy lighting systems shall each separately comply with the applicable requirements of §150(k).

§119(n)

Ballast for Recessed Luminaire Certification Requirements. A ballast for a compact fluorescent lamp installed in a residential recessed luminaire shall be certified to the Energy Commission. Ballasts which have not been certified to the Energy Commission shall not be used in residential recessed luminaires. Additional information about certifying to the Energy Commission is in Section 6.2.9.

6.2.2 Low Efficacy Luminaires

§150(k)2

A low efficacy luminaire is any luminaire that does not qualify as high efficacy; or any of the following lighting systems, regardless of efficacy:

1. Contains any type of line-voltage socket or lamp holder, including conventional medium screw-base sockets, candelabra sockets, pin-based sockets, or any other type of line-voltage lamp holders capable of accepting an incandescent lamp or any other type of low efficacy lamp. However, under certain conditions (described in Section 6.2.1) a luminaire with a GU-24 line-voltage socket may be classified as high efficacy.
2. Low voltage incandescent lighting.
3. Track lighting of any type, or any other lighting systems which allows the addition or relocation of luminaires without altering the wiring of the system.
4. Lighting systems which have modular components that allow conversion between screw-based and pin-based sockets without changing the luminaires' housing or wiring.

5. Electrical boxes that are finished with a blank cover, or electrical boxes where no electrical equipment has been installed, where the electrical box can be used for a luminaire or a surface mounted ceiling fan.
6. LED lighting which has not been certified to the Energy Commission as high efficacy.

6.2.3 Qualifying a Lighting System as High Efficacy

"Lumens per watt" for lighting is analogous to "miles per gallon" for an automobile. The lumen is the unit of visible light. To be rated as high efficacy, a lamp must produce a certain number of lumens for each watt of electrical power it consumes. Efficacy is therefore measured in lumens per watt. The following lighting systems typically qualify as high efficacy light sources:

1. Fluorescent lamps equipped with electronic ballasts
2. LED lighting which has been certified to the Energy Commission as high efficacy
3. Metal halide lighting (a type of HID lamp)
4. High Pressure Sodium (a type of HID lamp)
5. Low Pressure Sodium (however, this technology is not recommended for use in residential applications. It is not often used anymore in any application because it has the worst color rendering of any light source, having a deep yellow color)
6. Induction Lighting

The following lighting systems do not qualify as high efficacy lighting systems:

1. Incandescent lamps of any type (including any screw-in incandescent lamps, like regular 'A' or reflector lamps, or quartz halogen lamps, or low voltage lamps, like halogen MR lamps).
2. Mercury vapor lamps (a type of HID lamp)

To be classified as high efficacy, a lamp or lighting system must meet the requirements listed in Table 150-C of the Standards. For clarity, Table 150-C of the Standards is shown below as two different tables. It is shown as Table 6-1 for all lighting systems which are not LED lighting, and it is shown again as Table 6-2 for all LED lighting.

Lighting Other Than LED

§150(k)1; Table 150-C

For any lighting systems which are not LED lighting, simply divide the initial rated lumens of the lamp by the rated watts of the lamp. Lamp lumens can typically be found on the lamp package or in a manufacturer's catalogue. This calculation method should be used for any lighting system which is not LED lighting, including the following types of lighting systems:

1. Line-voltage incandescent
2. Low-voltage incandescent
3. Fluorescent
4. High intensity discharge (HID)
5. Induction

For simplicity, for non-LED lighting, the power used by the ballast or transformer is ignored when determining the lumens per watt for purposes of classifying lighting systems as high efficacy for compliance with the Residential Lighting Standards.

However, when determining how many watts of high and low efficacy lighting is being installed in residential kitchens, the power used by the ballast or transformer is included. Additional information about determining installed lighting power in residential kitchens is in Section 6.2.4.

A high efficacy luminaire, for all lighting systems which are not LED lighting, shall meet the minimum lamp efficacy requirements in Table 6-1 (which is Table 150-C in the Standards).

Table 6-1 – High Efficacy Lamps – Other than LED lighting

Lamp power	Minimum lamp efficacy
5 W or less	30 lm/W
over 5 W to 15 W	40 lm/W
over 15 W to 40 W	50 lm/W
over 40 W	60 lm/W

LED Lighting

§119(m); Table 150(c)

An LED Luminaire, or LED Light Engine with Integral Heat Sink, shall be certified to the Energy Commission before it can be classified as high efficacy for compliance with the Residential Lighting Standards. Any LED lighting system which has not been certified to the Energy Commission as high efficacy shall be classified as a low-efficacy lighting system. Additional information about certifying to the Energy Commission is in Section 6.2.9.

LED wattage, luminous flux, and efficacy must be determined according to Reference Joint Appendix JA8 (JA8), or to IES LM-79-08. See Section 6.2.10 for additional information about testing LED lighting.

§130(d)5 clarifies that the input power for LED lighting shall be the maximum rated input wattage of the system, including power used by fans, transformers and power supply devices. The maximum rated input wattage shall be listed on a permanent, pre-printed, factory-installed label.

A high efficacy LED luminaire or high efficacy LED source system shall meet the minimum system efficacy requirements in Table 6-2 (which is Table 150-C in the Standards).

For a Hybrid LED Luminaire to qualify as high efficacy, the LED Light Engine with Integral Heat Sink shall meet the minimum system efficacy requirements in Table 6-2, shall be certified to the Energy Commission as high efficacy, and all other lighting systems in the luminaire shall meet the minimum lamp requirements in Table 6-1 (which is Table 150-C in the Standards).

The Standards require that the maximum rated input wattage shall be listed on a permanent, pre-printed, factory-installed label as specified by Underwriters Laboratories (UL). However, there's a new LED lighting system recently introduced, where a centrally located driver is being used to operate more than one luminaire. Therefore, when multiple luminaires are connected to a single power supply/driver, the label used to determine the maximum wattage of the LED system shall be located on the LED power supply/driver, and the wattage of the system shall be based on the connected load of that LED power supply/driver as determined by the luminaire manufacturer or the rating of that LED power supply/driver as determined by the manufacturer of the power supply/driver.

Table 6-2– High Efficacy LED Lighting Source Systems

System power rating for LED lighting	Minimum system efficacy for LED lighting
5 W or less	30 lm/W
over 5 W to 15 W	40 lm/W
over 15 W to 40 W	50 lm/W
over 40 W	60 lm/W

6.2.4 Kitchen Luminaire Input Power

§150(k)3; §150(k)8

The Residential Lighting Standards require luminaire input power (wattage) to be determined in kitchens. Energy used by ballasts, transformers, and power supplies is included when determining installed lighting power.

§150(k)3

Blank Electrical Boxes

In residential kitchens, the wattage of electrical boxes finished with a blank cover or where no electrical equipment has been installed, and where the electrical box can be used for a luminaire or a surface mounted ceiling fan, shall be calculated as 180 watts of low efficacy lighting per electrical box.

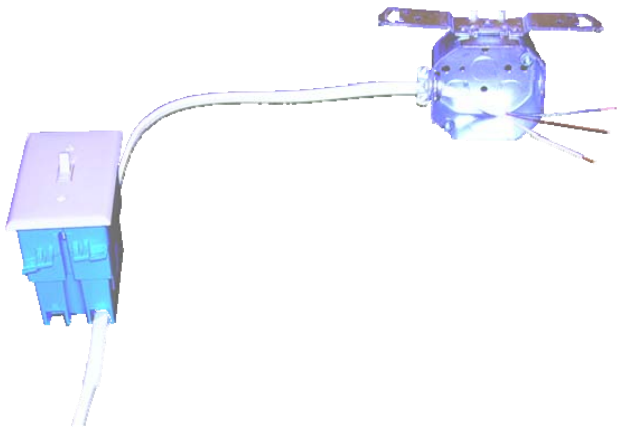

Figure 6-3 – Blank Electrical Box

Input Power Determined According to Type of Luminaire

The following requirements for determining how much wattage is installed in residential kitchens are in §130(d).:

Line Voltage Sockets

§130(d)1

The wattage of a luminaire with a line-voltage socket is determined by the rating of the luminaire, as described below, and not by the wattage of the initial lamp (light bulb) that is installed in the luminaire. A medium screw-base socket, which is a type of line-voltage socket, can accommodate a variety of different lamp technologies, including general service incandescent, halogen, reflector, and compact fluorescent, ranging in wattages from 2-1/2 to 250W. Line-voltage sockets include a variety of screw, pin, and bayonet bases, for which there is no transformer, ballast, or power supply between the wires connected to the luminaire and the lamp.

No Peel-off or Peel-down Wattage Labels

For line-voltage luminaires, the relamping rated wattage of the luminaire shall be listed on a permanent, pre-printed, factory-installed label, as specified by UL 1598, The factory-installed wattage label shall not consist of peel-off or peel-down layers or other methods which allow the rated wattage to be changed after the luminaire has been shipped from the manufacturer.

However, this disallowance of peel-off labels does not apply to IC and non-IC peel-off labels intended to be removed in the field as indicated in the luminaire manufacturer's installation instructions, provided that UL 1598 and applicable electrical codes are adhered to.

Recessed Versus Non-recessed Line-voltage Luminaires

There are different requirements for determining the wattage of recessed luminaires than there are for determining the wattage of luminaires which are not recessed, as follows:

Luminaires Which Are Not Recessed – including surface, pendant, pole, and under-cabinet mounted luminaires, shall be the maximum relamping rated wattage of the luminaire, as listed on a permanent, pre-printed, factory-installed label, as specified by UL 1598. The factory-installed wattage label shall not consist of peel-off or peel-down layers or other methods which allow the rated wattage to be changed after the luminaire has been shipped from the manufacturer.

Luminaires Which Are Recessed – shall be the larger of 1 or 2 below:

1. The maximum relamping rated wattage of the recessed luminaire, as listed on a permanent, pre-printed, factory-installed label, as specified by UL 1598, or the following, or
2. If the relamping rated wattage is smaller than the wattages listed below, then the wattages listed below must be used. The wattage is determined by the diameter and mounting height of the luminaire, as follows.
    a. 50W per socket for luminaires with housings or trims with an aperture diameter less than 5 inches (125 mm) regardless of mounting height; or
    b. 50W per socket for luminaires with housings or trims with an aperture diameter of greater than or equal to 5 inches (125 mm) and a mounting height of 11 ft or less, or
    c. 60W per socket for luminaires with housings or trims with an aperture diameter of greater than or equal to 5 inches (125 mm) and a mounting height of greater than 11 feet but less than 15 ft; or
    d. 75W per socket for luminaires with housings or trims with an aperture diameter of greater than or equal to 5 inches (125 mm) and a mounting height of 15 ft or more.

For clarity, Table 6-3 shows the above information in a table.

Table 6-3 –Recessed Luminaire with Line voltage Lamp Holders

Input wattage per socket shall be larger of what is listed on the UL label, or the wattage listed below, depending on the aperture and mounting height of the luminaire.

		Recessed Luminaire Aperture							
		≤3”	4”	5”	6”	7”	8”	9”	≥10”
Mounting Height	≤ 8’	50W	50W	50W	50W	50W	50W	50W	50W
	9’	50W	50W	50W	50W	50W	50W	50W	50W
	10’	50W	50W	50W	50W	50W	50W	50W	50W
	11’	50W	50W	50W	50W	50W	50W	50W	50W
	>11’	50W	50W	60W	60W	60W	60W	60W	60W
	13’	50W	50W	60W	60W	60W	60W	60W	60W
	<15’	50W	50W	60W	60W	60W	60W	60W	60W
	15’	50W	50W	75W	75W	75W	75W	75W	75W
	≥16’	50W	50W	75W	75W	75W	75W	75W	75W

Luminaires with Modular Components

§130(d)1C

For luminaires designed to accommodate a variety of trims or modular components that allow the conversion between screw-based and pin-based sockets without changing the luminaire housing or wiring, the highest wattage designated by the correlated marking on a permanent, pre-printed, factory-installed label on the luminaire housing shall be used.

Luminaires with Ballasts

§130(d)2

Includes fluorescent, induction, and HID luminaires.

The wattage of luminaires with permanently installed or remotely installed ballasts shall be the operating input wattage of the rated lamp/ballast combination published in manufacturer's catalogs based on independent testing lab reports as specified by UL 1598.

The wattage of a compact fluorescent or high intensity discharge luminaire that can accommodate a range of wattages without changing the luminaire housing, ballast, or wiring shall be the larger of the installed wattage, or the average wattage of the lamp/ballast combinations for which the luminaire is rated.

For example, a compact fluorescent luminaire which is rated for use with 26, 32, and 42W compact fluorescent lamps without changing the luminaire housing, ballast or wiring is determined by adding all three wattages together (26 + 32 + 42 = 100) and divide that total by 3 (100/3 = 33.33W). Luminaire wattage shall then be determined according to the wattage of the lamp initially installed as shown below in Table 6-4:

Table 6-4 –Multi-wattage Ballasts

Initial Lamp Wattage Installed	Installed Wattage Shall Be
26W	33.33W
32W	33.33W
42W	42W

Line-Voltage Track Lighting

§130(d)3

For versatility, there are a number of different options for determining the wattage of line-voltage lighting track or busway. See §130(d)3 or Section 5.4.3 of the Nonresidential Compliance Manual for additional information on determining input power for line-voltage track lighting.

A summary of the four options available for determining the power of line-voltage track is as follows:

1. The VA rating of the branch circuit feeding the track, or
2. The higher of:
    a. The rated wattage of all of the luminaires included in the system, or
    b. 45W per linear foot of track, or
3. If using an integral current limiter which has been certified to the Energy Commission, the higher of:
    a. The VA of the integral current limiter, or
    b. 12.5W per linear foot of track, or
4. If using a dedicated track lighting supplementary over current protection panel, the sum of the ampere (A) rating of all of the over current protection devices times the branch circuit voltages. A supplementary over current protection panels is typically used in nonresidential applications and may not be practical for use in residential applications.

Low-voltage Lighting

§130(d)4

This method for determining luminaire power applies to any low-voltage lighting system having a transformer, including low-voltage track lighting, or individual low-voltage luminaires.

The wattage of luminaires or lighting systems with permanently installed or remotely installed transformers shall be determined as follows:

- The rated wattage of the lamp/transformer combination, listed on a permanent, pre-printed, factory-installed label, as specified by UL, and
- For luminaires with transformers rated greater than 53W, the factory-installed wattage label shall not consist of peel-off or peel-down layers or other methods which allow the rated wattage to be changed after the luminaire or lighting system has been shipped from the manufacturer.

LED Lighting Source System

§130(d)5

LED lighting source systems shall be the maximum rated input wattage of the system as defined in §101. LED lighting system wattage shall be tested in accordance with Reference Joint Appendix JA8 or IES LM-79-08. The maximum rated input wattage shall be listed on a permanent, pre-printed, factory-installed label as specified by Underwriters Laboratories (UL). Additional information about testing LED lighting is in Section 6.2.10.

Miscellaneous Lighting Systems

§130(d)6

This method applies only to lighting systems which have not already been addressed by another subsection of §130(d), and is primarily intended to address new technologies. This method shall not be applied to incandescent, fluorescent, HID, or LED luminaires because these lighting technologies are already addressed in different subsections of §130(d).

The wattage of all other miscellaneous lighting equipment shall be the maximum rated wattage of the lighting equipment, or operating input wattage of the system, listed on a permanent, pre-printed, factory-installed label, or published in manufacturer's catalogs, based on independent testing lab reports as specified by UL 1574 or UL 1598.

GU-24 Lamps, Luminaires, and Adaptors

§130(e)

GU-24 Lamps, Luminaires, and Adaptors installed in California shall meet the following requirements:

1. Lamps with GU-24 bases shall have a minimum efficacy no lower than specified in Table 150-C (shown as Table 6-1 and Table 6-2 in this chapter).
2. The wattage of luminaires with GU-24 sockets shall be the operating input wattage as listed on a permanent, pre-printed, factory-installed label on the luminaire housing, as specified by UL. Luminaires with GU-24 sockets shall not be rated for any lighting system that has an efficacy lower than specified in Table 150-C.
3. Luminaires with GU-24 sockets shall not have modular components allowing conversion to any lighting system that has an efficacy lower than specified in Table 150-C.
4. There shall be no adaptors that convert a GU-24 socket to any other type of lighting system that has an efficacy lower than specified in Table 150-C.

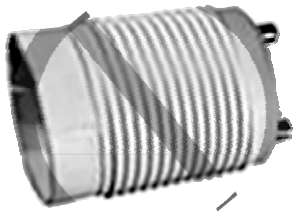

Figure 6-4 – GU-24 to medium screw base adaptor shall not be used

Note: A compact fluorescent ballast that has a GU-24 base on one end, and a compact fluorescent lamp socket on the other end, is not considered an adaptor. It is considered an integral component of a high efficacy lighting system.

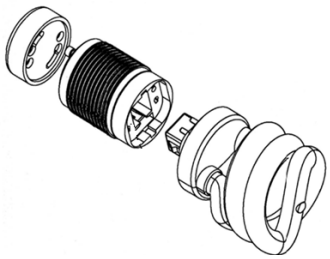

Figure 6-5 – A compact fluorescent ballast is not considered an adaptor

NO "Permanent" Adaptors

The Standards do not recognize any adaptor as being able to permanently converting one type of luminaire to another type for compliance with the Standards. For example, there are no "permanent" adaptors for converting a luminaire with incandescent screw-base socket to a permanently installed compact fluorescent luminaire, regardless of manufacturer declarations.

Figure 6-6 – A medium screw base to GU-24 socket adaptor is not recognized as high efficacy by Title 24.

6.2.5 Electronic Ballasts

§150(k)4

Fluorescent lamps with a power rating of 13 W or more shall have an electronic ballast that operates the lamp at a frequency of 20 kHz or more. All commonly available electronic ballasts meet this requirement.

Luminaires with high intensity discharge (HID) lamps (like pulse-start metal halide or high-pressure sodium) may contain hardwired electromagnetic HID ballasts.

Pin based compact fluorescent lamps that are operated with electronic ballasts typically have four-pin lamp holders. Pin-based compact fluorescent lamps with two-pin lamp holders typically will indicate that the ballast is magnetic.

However, the above rule-of-thumb, where a two-pin lamp holder typically indicates that a magnetic ballast is being used, does not apply to lamps having a GU-24 base. GU-24 sockets are line-voltage sockets in which there is not a ballast between the socket and the lamp. Therefore, the ballast is integral to the lamp. To determine if an integral compact fluorescent lamp with a GU-24 base has an electronic ballast, the label on the lamp will need to be checked.

§119(n)

There are also requirements for compact fluorescent ballasts in recessed luminaires to be certified to the Energy Commission. See Section 6.2.9 for additional information.

6.2.6 Permanently Installed and Portable Luminaires

The Residential Lighting Standards require that all permanently installed luminaires be high efficacy as defined in §150(k)1 , with some exceptions described later in this chapter. The Residential Lighting Standards do not apply to portable luminaires.

§101 definitions

Permanently installed luminaires include all luminaires attached to the inside or outside of a building or site. Permanently installed luminaires may have either plug-in or hardwired connections for electric power. This includes plug-in under-cabinet lighting where the luminaires are attached to the bottom of the cabinets. Permanently installed luminaires include the following:

1. Lighting attached to walls, ceilings, columns.
2. Track and flexible lighting systems.
3. Lighting inside permanently installed cabinets.
4. Lighting attached to the top or bottom of permanently installed cabinets.
5. Lighting attached to ceiling fans.
6. Lighting integral to exhaust fans.
7. Lighting that is integral to garage door openers if it is designed to be used as general lighting, is switched independently from the garage door opener, and does not automatically turn off after a pre-determined amount of time.

Permanently installed lighting does not include:

1. Portable lighting as defined by §101.
2. Lighting installed by the manufacturer in refrigerators, stoves, microwave ovens, exhaust hoods for cooking equipment, refrigerated cases, vending machines, food preparation equipment, and scientific and industrial equipment.
3. Lighting in garage door openers which consists of no more than two screw-based sockets integrated into the garage door opener by the manufacturer, where the lights automatically turn on when the garage door is activated, and automatically turn off after a pre-determined amount of time.

The definition of permanently installed lighting in §101 includes outdoor lighting mounted on poles, in trees, or in the ground. However, because outdoor lighting mounted on poles, in trees, or in the ground is not regulated by the Residential Lighting Standards, this portion of the definition applies only to nonresidential outdoor lighting applications.

Portable lighting, for residential applications, is defined as lighting with plug-in connections for electric power that is table and freestanding floor lamps. However, plug-in lighting attached to the bottom of a cabinet is considered permanently installed lighting.

6.2.7 Night Lights

§150(k)5

Permanently installed night lights and night lights integral to a permanently installed luminaire or exhaust fan shall meet one of the following conditions:

1. Shall contain only high efficacy lamps meeting the minimum efficacies contained in Table 150-C of the Standards (shown as Table 6-1 and Table 6-2 of this chapter) and shall not contain a line-voltage socket or line-voltage lamp holder, or
2. Shall be rated to consume no more than 5W of power as determined by §130(d), and shall not contain a medium screw-base socket.

Note: Indicator lights that are integral to lighting controls shall comply with §119(b).

6.2.8 Lighting Integral to Exhaust Fans

§150(k)6

Lighting integral to exhaust fans, in rooms other than kitchens, shall meet the applicable requirements of §150(k). This lighting integral to exhaust fans must be controlled separately from the exhaust fan according to §150(k)7, and as described further in Section 6.3.

6.2.9 Certification to the Energy Commission

§100(k); §110; §119

Certification to the Energy Commission is completed by manufacturers of regulated devices. Certification includes a declaration of compliance, executed under penalty of perjury of the laws of California, that the regulated device meets the requirements of the Standards.

For compliance with the Title 20 Appliance Efficiency Regulations, and the Title 24 Building Energy Efficiency Standards, the Energy Commission maintains a database of appliances, controls, and other devices which have been certified to the Energy Commission.

For compliance with the Residential Lighting Standards, this database includes lighting controls, ballasts for residential recessed luminaires, and high efficacy LED lighting source systems.

Lighting controls, ballasts for residential recessed luminaires, and high efficacy LED lighting source systems shall not be installed unless they have been certified by the manufacturer and listed on this database. The database and certification instructions are available from the following web link:

http://www.energy.ca.gov/appliances/appliance/index.html

The certification for residential lighting applications includes the following:

1. **Lighting Controls.** Lighting controls must be certified to the Energy Commission as complying with the applicable provisions of §119. This includes vacancy sensors (manual on / automatic off occupancy sensors) and dimmers.
2. **High Efficacy LED Lighting Source Systems.** For a light emitting diode (LED) lighting source system to qualify as high efficacy, an LED Luminaire, or LED Light Engine with Integral Heat sink shall be certified to the Energy Commission as meeting all of the following conditions:
    a. Shall meet the minimum efficacy requirements in Table 150-C (shown as Table 6-2 of this chapter)
    b. Input power shall be determined as specified by §130(d)5.
    c. The LED lighting source system shall be tested, by an independent testing lab, according to Reference Joint Appendix JA8 or according to IES LM-79-08. See Section 6.2.10 for more information about testing LED lighting.
3. **Ballasts for Residential Recessed Luminaires.** All ballast for use in a residential recessed luminaire shall be certified to the Energy Commission according to §119(n), as meeting the following conditions:
    a. Be rated by the ballast manufacturer to have a minimum rated life of 30,000 hours when operated at or below a specified maximum case temperature. This maximum ballast case temperature specified by the ballast manufacturer shall not be exceeded when tested in accordance to UL 1598 Section 19.15; and
    b. Have a ballast factor of not less than 0.90 for non-dimming ballasts and a ballast factor of not less than 0.85 for dimming ballasts.

6.2.10 Light Emitting Diode (LED) Lighting Source Systems

LED lighting is now available for use in residential applications. For the foreseeable future, there will continue to be both high efficacy and low efficacy LED lighting available. To be classified as high efficacy for compliance with the Residential Lighting Standards, LEDs shall be certified to the Energy Commission. LED sources systems which are not certified to the Energy Commission shall be classified as low efficacy lighting in residential applications.

The Standards include the following language to address the use of LED lighting:

1. §101 contains definitions for LED lighting.
2. §119 requires LED lighting to be certified to the Energy Commission before it can be classified as high efficacy for residential applications. An LED luminaire, or LED light engine with integral heat sink, shall be classified as low efficacy if it has not been certified to the Energy Commission as high efficacy. Additional information about certifying to the Energy Commission is in Section 6.2.9.
3. §130(d)5 points to Reference Joint Appendix JA8 for determining how much power (wattage) is installed with an LED lighting system. JA8 requires that wattage for LEDs shall be the maximum rated input wattage of the LED lighting system, including power used by fans, transformers, and power supply devices
4. §150(k)1 and Table 150-C (shown as Table 6-2 of this chapter) has requirements for determining when an LED lighting source system can be classified as high efficacy. Additional information about classifying high efficacy lighting is in Section 6.2.1.
5. Reference Joint Appendix JA8 is the required method for testing LED source systems, including testing for input power, luminous flux, and calculation of efficacy. The IES LM-79-08, Approved Method: Electrical and Photometric Measurements of Solid-State Lighting Products, is an alternate test method that can be used for determining luminous flux measurement of LED luminaires or LED light engines with integral heat sink, provided that wattage is determined in accordance with JA8.2, the testing lab is accredited in accordance with JA8.2c, and efficacy is calculated in accordance with JA8.4.
6. §101 defines an LED Light Engine with Integral Heat Sink (or LED Light Source System) as a subsystem of an LED Luminaire that includes one or more LED Components, LED Devices or LED Packages, an LED Array, or LED Module; an LED Driver (Power Source); electrical and mechanical interfaces; and an integral heat sink to provide thermal dissipation. An LED Source System may be designed to accept additional components that provide aesthetic, optical, and environmental control (other than thermal dissipation).
7. An LED Source System with standardized base is an LED Lamp. A standardized base is an ANSI standardized base (such as a medium screw-base socket) that is designed to connect to the

branch circuit via an ANSI standardized lampholder/socket. For the purposes of the Standards, an LED lamp (often referred to as a “light bulb”) with a screw-base is not an LED light engine with integral heat sink. In §130(d)1 it is clear that any luminaire with a line-voltage lamp holder (including a medium screw-based socket) shall be classified as low efficacy, regardless of the type of lamp that is initially installed in the luminaire. Therefore an LED lamp screwed into an incandescent luminaire shall not be classified as high efficacy.

8. Exception 2 to §150(k)2A establishes that GU-24 is the only line-voltage lamp holder that may be classified as high efficacy under certain conditions. See Section 6.2.1 for more information about when a luminaire with a GU-24 lamp holder may be classified as high efficacy. Also, see Section 6.2.1 for more information about when high efficacy LED trims may be classified as high efficacy.

6.3 Switching Devices and Controls

The use of lighting controls is an important component of the Residential Lighting Standards. This section describes lighting control requirements for the Residential Lighting Standards.

6.3.1 Certification of Residential Lighting Controls

Manual-on / automatic-off occupant sensors (also known as vacancy sensors), motion sensors (used for outdoor lighting), and dimmers installed to comply with §150(k) must be certified according to the applicable requirements of §119. Additional information about certifying devices to the Energy Commission is in Section 6.2.9.

6.3.2 Switching Requirements §150(k)7

Following are controls that are required for compliance with the Residential Lighting Standards:

Permanently Installed Luminaires. All permanently installed high efficacy luminaires must be switched separately from low efficacy luminaires.

Exhaust Fans. There are two options for the switching of lighting associated with exhaust fans:

1. All lighting must be switched separately from exhaust fans, or
2. For an exhaust fan with an integral lighting system, the lighting system must be able to be manually turned on and off while allowing the fan to continue to operate for an extended period of time. An exhaust fan may need to run continuously if used to comply with §150(o).

Readily Accessible Manual Controls. All permanently installed luminaires shall be switched with readily accessible controls that permit the luminaires to be manually switched on and off.

Manufacturer Instructions. All lighting controls and equipment shall be installed in accordance with the manufacturer's instructions.

Multiple Switches. This requirement applies to all 3-way, 4-way, and other lighting circuits controlled by more than one switch. A lighting circuit controlled by more than one switch where a dimmer or vacancy sensor has been installed to comply with §150(k) shall meet the following conditions:

1. No controls shall bypass the dimmer or vacancy sensor function, and
2. The dimmer or vacancy sensor shall be certified to the Energy Commission that it complies with the applicable requirements of §119.

6.3.3 Energy Management Control System

§119

Lighting control devices may be either individual devices or systems consisting of two or more components. Therefore, options allowing compliance through the use of lighting controls may be met through the use of an individual lighting control device or an energy management control system.

All lighting control devices installed for compliance with the Residential Lighting Standards must be certified to the Energy Commission. See Section 6.3.1 for additional information about certifying lighting control devices to the Energy Commission.

For control systems consisting of two or more components, such as an Energy Management Control System (EMCS), the manufacturer of the control system shall certify each of the components required for the system to comply with §119.

6.3.4 Vacancy Sensors

§150(k)10 and 11

The Residential Lighting Standards require the installation of high efficacy lighting, but allow vacancy sensors to be used as an alternate compliance option in any room or area that is not a kitchen. The Standards do not require a vacancy sensor to be used with any high efficacy luminaire. If there are rooms or areas where there are safety concerns regarding the use of vacancy sensors, then compliance through the use of high efficacy lighting may be preferable.

Manual-on / automatic-off occupant sensors, also known as vacancy sensors, automatically turn lights off if an occupant forgets to turn them off when a room is unoccupied. Additionally, these sensors shall provide the occupant with the ability to turn the lights off manually upon leaving the room, and turn them on manually upon entering the room. The manual–off feature is critical because it provides the occupants with the flexibility to control the lighting environment to their satisfaction, and results in greater energy savings by allowing the occupants to turn off the lights when they are not needed.

§119

Vacancy sensors are required to be certified to the Energy Commission as meeting all of the following requirements:

1. Provides the occupant with the ability to manually turn the lights on and off.
2. Shall be capable of turning off the lighting automatically within 30 minutes or less after the room has been vacated in response to the absence of occupants in the room, and
3. Have a visible status signal that indicates that the device is operating properly or that it has failed or malfunctioned. The visible status signal may have an override switch that turns the signal off.
4. Shall not turn on the lighting automatically, except the sensor shall have a grace period of 15 seconds to 30 seconds to turn on the lighting automatically after the sensor has timed out, and

5. Shall not have an override switch that disables the vacancy sensor, and
6. Shall not have an override switch that converts the sensor from a manual-on to an automatic-on system.

Vacancy sensors commonly on the market are wired in two different ways:

1. Where sensor operating current uses the load connection (two-wire connection).
2. Where sensor operating current uses a neutral connection (three-wire connection)

Some vacancy sensors using the load connection for operating current have minimum load requirements. For example, a vacancy sensor may require that bulbs rated over 25W be installed before the sensor will work. However, if an occupant later installs a screw-in compact fluorescent lamp that is rated less than 25W, the sensor may no longer work. Therefore, it is critical to select a sensor that has a low enough minimum load requirement to accommodate however small a load the occupant may install into the socket. The sensors that have a minimum load requirement are typically the ones that are designed to operate without a neutral wire in the switch box which is a common wiring scheme in older residential units.

A better solution would be to install a vacancy sensor that does not have minimum load requirements.

Vacancy sensors that are designed to take advantage of the neutral wire in the switch box typically do not have a minimum load requirement and are the preferred choice to meet the requirements of the Residential Lighting Standards.

Using vacancy sensors that uses the ground wire for the operating current is not recommended. There are potential safety concerns with using the ground to carry current in residential applications.

If you are trying to control a lighting fixture from two different switches you may want to use a ceiling mounted rather than a wall switch occupant sensor, or use 3-way vacancy sensors at both switch locations.

Example 6-1

Question

We would like to use incandescent lighting in a bathroom along with a vacancy sensor. Although the sensor has the “manual-on” capability, it also has the capability of turning the lights on automatically by flipping a switch that is located under the switchplate cover. Does this sensor meet the requirements of the Residential Lighting Standards?

Answer

No, this sensor does not meet the requirements of the Standards. §119 requires that the vacancy sensor shall not have an override switch that converts the sensor from a manual-on to an automatic-on system.

Example 6-2

Question

Must the sensor in the example above give the occupant the option of turning the light off manually upon leaving the bathroom?

Answer

Yes. The sensors must provide the occupant with the option to turn the lights off manually upon leaving the space. If the occupant forgets to turn the lights off when a room is left unoccupied then the occupant sensor must turn the lights off automatically within 30 minutes. The lights must then be manually switched back on when the lights are needed again. This option provides the occupants with the flexibility to control the lighting environment to their satisfaction, and results in greater energy savings by allowing the occupants to turn off the lights when they are not needed.

Example 6-3

Question

What are our options if we want to use an automatic-on occupant sensor in a bathroom, garage, laundry room, or utility room?

Answer

You can use automatic-on sensors only in conjunction with high efficacy luminaires. With high efficacy luminaires you may use a toggle switch, vacancy sensor, or automatic-on sensor. With luminaires in these rooms that are not high efficacy you must use a vacancy sensor.

6.3.5 Residential Dimmers

§150(k)11

One of the alternate options to using high efficacy lighting in any room that is not a kitchen, bathroom, garage, laundry room, closet greater than 70 ft², or utility room is the use of dimmers.

§119

Dimmers are required to be certified to the Energy Commission as meeting all of the following requirements:

1. Be capable of reducing power consumption by a minimum of 65 percent when the dimmer is at its lowest light level, and
2. If the device is a dimmer controlling incandescent or fluorescent lamps, provide electrical outputs to lamps for reduced visual flicker operation through the dimming range, and
3. Be listed by a rating lab recognized by the International Code Council (ICC) as being in compliance with Underwriters Laboratories Standards, and
4. If the device is a wall box dimmer designed to be used in a 3 or more-way circuit with non-dimmable switches, the level set by the dimmer shall not be overridden by any of the switches in the circuit. The dimmer and all of the switches in the circuit shall have the capability of turning lighting OFF if it is ON, and turning lighting ON to the level set by the dimmer if the lighting is OFF. Any wall box dimmer that is connected to a system with an emergency override function shall be controlled by the emergency override.
5. If the device is a stepped dimmer, shall include an off position to turn lights completely off.

There are 3-way, 4-way, and other multiple location dimming circuit combinations (multi-way) where a single multi-way dimmer can be combined with other multi-way dimmers, or combined with multi-way toggle switches. The Residential Lighting Standards do not prohibit the combination of dimmers and regular toggle switches, provided that the toggle switches never override the dimmer control.

The Residential Lighting Standards require that, when using a dimmer as the alternate compliance option to high efficacy lighting, the dimmer must control the low efficacy lighting. This control requirement applies equally to 2-way, 3-way, 4-way switching; or any other multiple switching combinations. No controls shall bypass a dimmer where it has been installed to comply with §150(k). If a control bypasses a dimmer, that dimmer can no longer be said to control the lighting.

For example, when using 3-way dimmers combined with a 3-way toggle switch: If the dimmer is set at 50 percent power, the toggle switch at the other end of a room must not bypass or change the 50 percent power level.

In some small rooms, it may be practical to use a multi-way toggle switch in combination with a multi-way dimmer.

However, in large rooms, long hallways, and on stairways, lighting levels may occasionally be inadequate if a multi-way dimmer is used in only one switch location, and the other switch locations use non-dimmable toggle switches. For example, installing a dimmer on one floor, and a regular toggle switch on another floor, may occasionally result in inadequate light levels on a stairway. Therefore, dimming solutions where the lights can be dimmed from ALL locations are recommended in stairways and hallways. For example, it is preferred to install a multi-way dimmer on each floor of a stairway instead of a multi-way dimmer on one floor of the stairway and a regular toggle switch on another floor.

It is important to correctly match the dimmer with the type of lighting load that is being dimmed. Failure to correctly match the dimmer with the electrical lighting load may result in early equipment failure, including the dimmer, transformer, ballast, or lamp.

Dimmer manufacturers typically offer three basic types of incandescent dimmers: Line voltage (120 volt), low-voltage for use with a magnetic transformer, and low-voltage for use with an electronic transformer. Line voltage incandescent lamps, including tungsten-halogen lamps, can easily be dimmed over their full range of output with voltage control or phase control (electronic) dimmers. Tungsten-halogen lamps can be dimmed with conventional incandescent dimmers, generally without any special considerations. When dimming a low voltage load, additional components are required in the dimmer to avoid overheating the transformer. UL has separate requirements for 120-volt and low-voltage dimmers due to the heat concern with transformers.

All fluorescent lamps 13W or greater, with electronic ballasts, and meeting the minimum lumens per watt already comply with Residential Lighting Standards. Even though high efficacy fluorescent lamps with electronic ballasts do not require dimmers to meet Standards, dimmers are permitted to be used with fluorescent lighting systems. Most fluorescent lamps cannot be properly dimmed with the same simple wallbox devices typically used for dimming incandescent lamps. A special control and dimming ballast must be used. Some types of screw-in compact fluorescent lamps with integral ballasts can be dimmed by simple controls. However, many screw-in compact fluorescent lamps cannot be dimmed at all.

6.4 Kitchens

§150(k)9.

The Residential Lighting Standards define a residential kitchen as “a room or area used for food storage and preparation and washing dishes including associated counter tops and cabinets, refrigerator, stove, oven, and floor areas.”

Kitchen lighting includes all permanently installed lighting in the kitchen, except for lighting that is internal to cabinets for the purpose of illuminating only the inside of the cabinets. Lighting in areas adjacent to the kitchen, including but not limited to dining and nook areas, are considered kitchen lighting if they are not separately switched from kitchen lighting.

The intent of the kitchen lighting Standards is to insure that the builder provides the occupant with energy efficient lighting. The permanently installed lighting should provide sufficient light levels for basic kitchen tasks without the need for portable (plug-in) lighting.

6.4.1 Determine High Efficacy and Low Efficacy Installed Wattage

§150(k)8

The Residential Lighting Standards require that at least half the lighting watts installed in a kitchen must be consumed by high efficacy luminaires. For example, if 150W of high efficacy lighting is installed, no more than 150W of low efficacy lighting can be installed. See Sections 6.2.1 and 6.2.2 for descriptions of high and low efficacy luminaires.

Because high efficacy luminaires typically consume less power than other luminaires, about three-fourths of the luminaires in the kitchen are likely to be high efficacy. Form CF-6R-LTG-01, the Residential Lighting Installation Certificate, found in Appendix A, must be completed to determine if kitchen lighting complies with the Standards, and must be completed for all residential lighting installations.

There are no limits to the total number of watts that can be installed in a residential kitchen. Therefore, there are no limits to illumination levels. If higher illumination levels are needed, simply install additional wattage from high efficacy luminaires until needed illumination levels are reached.

Example 6-4

Question

I am designing a residential kitchen lighting system where I plan to install six 26W compact fluorescent recessed downlights, and four 24W linear fluorescent under cabinet luminaires. How many watts of incandescent lighting can I install?

Answer

First, determine the rated input watts of the fluorescent lighting system, including any additional wattage used by the ballasts. For this example, let's assume that the downlights with electronic ballasts are rated by the ballast manufacturer as consuming 26W, and the under cabinet luminaires with electronic ballasts are rated by the ballast manufacturer as 25W.

26 x 6 = 156W

25 x 4 = 100W

Total = 256W

Therefore, the maximum watts of incandescent lighting that can be installed is 256W.

Example 6-5

Question

In the above example, if I plan to use 40W incandescent lamps (bulbs) in luminaires that have a relamping rated wattage of 90W, how many incandescent luminaires can I install?

Answer

The installed incandescent wattage is based upon the relamping rated wattage of the luminaire, and not by the wattage of the lamp. Two 90W incandescent luminaires = 180W, and three-90W incandescent luminaires = 270W. Because no more than 256W of low efficacy lighting can be installed in the above kitchen, only two-90W incandescent luminaires may be installed. The additional 76W of low efficacy lighting may be installed somewhere else in the kitchen, provided that the total installed relamping rated wattage does not exceed the 76W still available. Alternatively, four-60W incandescent luminaires (240W) can be installed in the kitchen.

Example 6-6

Question

In the above example, if I plan to use low-voltage incandescent halogen lamps with transformers rated at 40W each (in this example, let's assume that 40W includes the input wattage of the transformer + the lamp), how many of these low-voltage incandescent luminaires can I install?

Answer

The installed of low-voltage lighting is based upon the rating of the transformer. You are allowed up to 256W of low efficacy lighting

256 divided by 40 = 6.4 luminaires

You are allowed to install 6 low-voltage incandescent halogen luminaires with transformers rated at 40W each.

Example 6-7

Question

In the previous example, if I plan to use 15W LED luminaires which has not been certified to the Energy Commission as high efficacy, how many of these LED luminaires can I install?

Answer

LED lighting which has not been certified by the Energy Commission as high efficacy shall be classified as low efficacy lighting. The installed LED system wattage must include transformers, power supplies, and any other power consuming components. You are allowed up to 256W of low efficacy lighting.

In this example, let's assume a system input wattage of 15W per LED luminaire:

256 divided by 15 = 17 luminaires

You are allowed to install 17 low efficacy LED luminaires with system input wattage of 15W each.

6.4.2 Kitchen Low Efficacy Tradeoff Option

Exception to §150(k)8

There is a residential kitchen lighting "tradeoff" option available where additional low efficacy lighting is needed, provided that other conditions are met.

Once it has been determined that the installed low efficacy lighting wattage is no greater than the installed high efficacy wattage, a limited number of additional low efficacy lighting wattage may be installed. The additional low efficacy wattage shown below in Table 6-5 may be installed provided that all of the following conditions are met:

1. All installed low efficacy luminaires in the kitchen are controlled by a manual-on occupant sensor, dimmer, energy management control system (EMCS), or a multi-scene programmable control system, and
2. All permanently installed luminaires in garages, laundry rooms, closets greater than 70 ft², and utility rooms are high efficacy and are also controlled by a vacancy sensor.

See Section 6.3.1 for requirements to certify lighting controls.

Table 6-5 Additional Low Efficacy Wattage Tradeoff

Size of Individual Dwelling Unit	Additional low efficacy lighting allowed in a residential kitchen
Less than or equal to 2,500 ft²	Up to an additional 50 W
Larger than 2,500 ft²	Up to an additional 100 W

Example 6-8

Question

I am designing kitchen lighting for a 2,400 ft² house. My design exceeds the 50 percent low efficacy lighting ratio in my kitchen. This design includes 208W of high efficacy lighting. I plan to control the low efficacy lighting in the kitchen with a multi-scene programmable control system, and install both high efficacy lighting and vacancy sensors in the garage, laundry room, all closets greater than 70 ft², and the utility room. How many watts of low efficacy lighting can I install in my kitchen?

Answer

You are allowed an additional 50W of low efficacy lighting in the kitchen because the house is less than 2,500 ft². You are also allowed 208W of low efficacy lighting based upon the watts of high efficacy lighting you are installing.

50W + 208W = 258W.

You are allowed to install up to 258W of low efficacy lighting in the kitchen.

6.4.3 Lighting Internal to Cabinets

Lighting internal to cabinets is not considered when determining that at least 50 percent of the permanently installed lighting in a residential kitchen is high efficacy. Permanently installed lighting that is internal to cabinets shall use no more than 20W of power per linear foot of illuminated cabinet.

Lighting that is internal to cabinets is defined as lighting installed inside of a cabinet only for the purpose of the illuminating the inside of the cabinet. Lighting installed for the purpose of illuminating surfaces outside of kitchen cabinet is not considered lighting internal to cabinets. The following lighting systems are not considered lighting internal to cabinets:

1. Lighting recessed into a cabinet for the purpose of illuminating surfaces outside of the cabinet.
2. Lighting attached to any surface on the outside of a cabinet, including the top, bottom, or sides.
3. Lighting attached to the inside of a cabinet, such as reflector lamps, for the purpose of projecting light out of the cabinet.

Example 6-9

Question

I have 23 lf of upper kitchen cabinets, and 32 ft of lower kitchen cabinets. I want to install lighting on the inside of 18 ft of upper cabinets which have glass doors. The upper cabinets have three shelves. I want to install lights under all three shelves. How many watts of lighting may I install in the cabinets?

Answer

The cabinet lighting allowance is based upon the linear foot of illuminated cabinet, regardless of the number of shelves in each cabinet. Therefore, multiply 18 ft times 20W per foot = 360W. You are allowed to install up to 360W of internal cabinet lighting.

Example 6-10

Question

In the above example, if I have 18 lf of upper cabinets with glass doors, but I only want to install lighting in 10 lf of the cabinets, how many watts of lighting may I install in the cabinets?

Answer

The allowance is based upon the linear feet of cabinet that is illuminated. In this case, multiply 10 ft time 20W/ft = 200W. You are allowed to install up to 200W of internal cabinet lighting.

Example 6-11

Question

I want to install track lighting on my kitchen ceiling to illuminate the inside of my kitchen cabinets, from the outside of the cabinet and through the glass doors. Am I allowed 20W/lf of glass door for this lighting task?

Answer

No, the 20W/ft^2 for illuminated cabinet applies only to lighting that is installed inside of the cabinet, and which has been installed only for the purpose of illuminating the inside of the cabinets.

Example 6-12

Question

In the above example, I am installing puck lights under the shelves of the cabinets with glass doors. Some of the lighting will inadvertently spill through the glass. Is this still considered lighting only for the purpose of illuminating the inside of the cabinets?

Answer

Yes, this is still considered lighting for the purpose of illuminating the inside of the cabinets because the lighting system is specifically designed for illuminating the inside of the cabinets. However, if a lighting different lighting system, such as adjustable flood lights, is designed to project lighting on to surfaces external to the cabinets, that lighting will be considered permanently installed kitchen lighting, and not internal cabinet lighting.

6.4.4 Kitchen Lighting Controls

High-efficacy fixtures and low efficacy fixtures are required to be switched separately. See Section 6.3 for additional information on residential lighting controls. It is also recommended to separately switch different layers of the kitchen lighting. Each layer that can serve a unique function should have the ability to operate independently.

The following are some examples of layers that code may allow to be switched together but are recommended to be switched separately:

- Recessed Downlights
- Linear fluorescent luminaires mounted on the ceiling
- Under-cabinet lighting

Under-cabinet lighting using 14W and 28W T5 linear fluorescent lamps

Source: www.gelighting.com

Figure 6-7 – Kitchen Work Surface Lighting

- In uplights (mounted on walls or on top of cabinets). Uplights are effective at making rooms less gloomy, so if an uplight is provided people may choose not to switch on the other lights in the room.
- Low efficacy luminaires must be switched on a separate circuit from the high efficacy luminaires. These could include low-voltage halogen MR lamps or reflector lamps used to provide decorative spotlighting.

- Lighting in areas adjacent to the kitchen, such as dining and nook areas and even family rooms, is considered to be kitchen lighting if it is not separately switched from the kitchen lighting. The switches may be mounted on the same faceplate, but as long as the lights can be switched independently, these areas do not count as being in the kitchen.

Recessed cans with 18W CFLs light specific task areas

Wall-mounted uplighters using 32W CFLs increase the sense of space

Figure 6-8 – General Kitchen Lighting

See Section 6.2.3 of this Compliance Manual for information on determining the input power (wattage) of each installed luminaire.

Example 6-13

Question

I am using an incandescent luminaire over the sink that is capable of housing a 150W lamp. I plan to install a 26W compact fluorescent lamp in the socket. Does this qualify as a high efficacy luminaire and what wattage should I use in determining if half the lighting power in the kitchen is high efficacy?

Answer

No, the luminaire does not count as high efficacy because it is capable of being lamped with an incandescent lamp. Use the maximum rated power (150W) for determining the percent of high efficacy lighting.

Example 6-14

Question

If I use track lighting in a kitchen, how do I calculate the power?

Answer

See §130(d) or Section 6.2.4 of this Residential Compliance Manual. For line voltage track, use the maximum relamping wattage of all of the installed luminaires as listed on permanent factory-installed labels, or 45W/lf of track, whichever is larger. An alternate method is to calculate the power based on the volt-ampere rating of the branch circuit feeding the track, or the volt-ampere of a current limiter integral to the track. For low-voltage tracks, use the rated watts of the transformer as listed on a permanent factory-installed label.

Example 6-15

Question

I am doing minor renovations to my kitchen that has six recessed incandescent cans and I am adding a new luminaire over the sink. Does this luminaire have to be a high efficacy luminaire?

Answer

Yes, all new luminaires must be high efficacy until at least 50 percent of the total lighting wattage comes from high efficacy luminaires (§152(b)1 and §152(b)2).

Example 6-16

Question

I am completely remodeling my kitchen and putting in an entirely new lighting system. How do the Residential Lighting Standards apply to this case?

Answer

At least half the lighting watts must be high efficacy luminaires. This is treated like new construction.

Example 6-17

Question

Where does the kitchen lighting stop and the other lighting begin in the case of a large family room with the kitchen on just one side of an approximately 24-ft by 24-ft room. Is the kitchen nook part of the kitchen? Lighting over the eating counter? Lighting in an adjacent pantry?

Answer

Lighting over food preparation areas is kitchen lighting, including areas used for cooking, food storage and preparation and washing dishes, including associated countertops and cabinets, refrigerator, stove, oven, and floor areas. Any other lighting on the same switch is also kitchen lighting, whether or not the luminaires are in the kitchen area. Lighting for areas not specifically included in the definition of a kitchen, like the nook or the family room, is not kitchen lighting, as long as it is switched separately.

Example 6-18

Question

I am installing an extraction hood over my stove, it has lamps within it. Do these lamps have to be high efficacy?

Answer

This lighting is part of an appliance, and therefore does not have to meet the Residential Lighting Standards for permanently installed lighting. This lighting is ignored in determining if half the kitchen lighting is high efficacy.

6.5 Bathrooms, Garages, Laundry Rooms, Closets, and Utility Rooms

§150(k)10

Lighting in bathrooms, garages (attached and detached), laundry rooms, closets and utility rooms must be high efficacy, or must be controlled by a vacancy sensor. See Section 6.3 for information on residential lighting controls.

Garages, laundry rooms, closets and utility rooms can be lit entirely by high efficacy lighting. Linear fluorescent luminaires are typically between 1.5 and 4 times as efficient as CFLs, and should be used unless there is insufficient space. Luminaires should be mounted close to washer/dryer hookups and over work surfaces to ensure shadow-free illumination.

6.5.1 Bathrooms

§101 definitions

A **bathroom** is a room or area containing a sink used for personal hygiene, toilet, shower, or a tub.

If a sink used for personal hygiene is in a room other than a bathroom, such as bedroom, where no doors, walls, or other partitions separate the sink area from the rest of the room, and the lighting for the sink area is switched separately from room area lighting, only the luminaire(s) that are lighting the sink area must meet the bathroom lighting requirements; in this case, lighting of the sink area includes lighting of associated counters, cabinets, and mirrors.

More than one circuit of luminaires may be attached to the same vacancy sensor.

Where automatic shutting off of lights by a vacancy creates a safety concern, the Residential Lighting Standards allow compliance though the use of high efficacy luminaires, which when installed, does not require the use of a vacancy sensor. For safety in bathrooms, it is recommended that at least one high-efficacy luminaire should be installed so that it is not controlled by the vacancy sensor circuit. This will help to ensure that all of the luminaires don't switch off while someone is in the bath. Even dual technology sensors may not detect a motionless and silent occupant.

6.5.2 Garage

§101 definitions

A **garage**, for compliance with the Residential Lighting Standards, is a non-habitable building or portion of building, attached to or detached from a residential dwelling unit, in which motor vehicles are parked.

Garages present an opportunity to reduce energy use by providing task lighting. The end of the garage furthest from the door to the house is often used as a work area, and can be provided with high efficacy luminaires switched separately from the rest of the space.

See Section 6.2.6 for information about when lighting integral to garage door openers does and does not have to be included as permanently installed lighting in a garage.

6.5.3 Laundry Room

§101 definitions

A **laundry room** is a non-habitable room or space which contains plumbing and electrical connections for a washing machine or clothes dryer.

6.5.4 Closets

§101 definitions

A **closet** is a non-habitable room used for the storage of linens, household supplies, clothing, non-perishable food, or similar uses, and which is not a hallway or passageway.

Exception 2 to §150(k)10

Closets less than 70 ft² are exempt from these requirements. However, a hallway having storage shelves, such as a butler's cupboard, shall not be exempt because it is considered a hallway for compliance with the Residential Lighting Standards.

6.5.5 Utility Room

§101 definitions

A **utility room** is a non-habitable room or building which contains only HVAC, plumbing, or electrical controls or equipment; and which is not a bathroom, closet, garage, or laundry room.

6.5.6 Combined High Efficacy and Vacancy Sensor Option

See Section 6.4.2 for information about the option to install both high efficacy lighting and vacancy sensors in garage, laundry, closets greater than 70 ft², and utility rooms, to obtain additional kitchen low efficacy lighting.

Although not required, vacancy sensors can be used in conjunction with high efficacy lighting to achieve the lowest possible energy use. If there are any concerns about safely using vacancy sensors in conjunction with low-efficacy luminaires in a space, consider the following two options:

1. In addition to the low efficacy luminaires controlled by a vacancy sensor, leave one high efficacy luminaire on a separate manual switch.
2. Install all high efficacy luminaires in the space; high efficacy luminaires do not require a vacancy sensor to meet the requirements of the Residential Lighting Standards.

Example 6-19

Question

What types of vacancy sensors qualify for controlling low efficacy lights in bathrooms, garages, laundry, closets, and utility rooms?

Answer

Eligible vacancy sensors are those which have been certified to the Energy Commission. These vacancy sensors (manual-on / automatic-off occupancy sensors) do not allow the luminaire to be turned on automatically and do not have an override that allows it to remain on.

Sensors including microwave, ultrasonic and passive infra-red (PIR) must be certified to the Energy Commission as complying with the applicable provision of §119.

See Section 6.3.3 for more information about vacancy sensors.

Example 6-20

Question

Is it good lighting practice to have all the lighting in a room controlled by a single vacancy sensor?

Answer

Vacancy sensors may fail to detect people who aren't making large movements, and their sensitivity is reduced in hot environments. Vacancy sensors may cause the lights to switch off while someone is using a hazardous device. Where safety is an issue, high efficacy luminaires should be installed. High efficacy luminaires do not require a vacancy sensor to meet the Residential Lighting Standards.

Example 6-21

Question

Is the factory installed lighting system in a bathroom mounted medicine cabinet required to be either high-efficacy or controlled by a vacancy sensor?

Answer

If the factory installed lighting in a medicine cabinet is designed to only illuminate the inside of the medicine cabinet, and the lighting is controlled only by a door activated switch where the lights turn off automatically when the cabinet door is closed, then the factory installed lighting is not regulated by the Residential Lighting Standards. However, if the factory installed lighting is connected to a manually operated switch that can be turned on regardless of the position of the cabinet door, or the lighting is designed to illuminate or display the contents of the cabinet when the door is closed, then it is considered permanently installed lighting that must comply with the Residential Lighting Standards. Also, any factory installed "bath bar" or other general lighting system integrated into the medicine cabinet is considered permanently installed lighting that must comply with the Residential Lighting Standards.

Example 6-22

Question

Is the factory installed lighting in a built-in ironing board device required to be either high-efficacy or controlled by a **vacancy sensor when it is installed in a laundry room?**

Answer

Yes, if the lighting is permanently attached it must be either high-efficacy or controlled by a vacancy sensor. See Section 6.2.6 for additional information about permanently installed luminaires.

6.6 Other Rooms

§150(k)11

Permanently installed lighting in other rooms has three compliance options. The lighting must be high efficacy, controlled by a vacancy sensor, or controlled by a dimmer. See Section 6.3 for lighting control requirements.

"Other rooms" include any room or area that is not a kitchen, bathroom laundry, garage, closet, or utility room. Other rooms include hallways, dining rooms, family rooms, club house, home office, and bedrooms – the rooms in which people are most aware of interior design both in terms of fashion and the usability of their living space. See Section 6.4 for a definition of a kitchen, and Section 6.5 for definitions of bathroom, laundry, garage, closet, and utility room.

Exception 2 to §150(k)11

Lighting in detached storage buildings less than 1000 ft², when those storage buildings are located on a residential site, is not required to comply with §150(k)11.

There are rooms in many houses for which permanently installed lighting has not been provided. Instead, these rooms are often provided with switched receptacles, sometimes called, "half-hots." Many people commonly add their own portable lighting. Unfortunately, portable lighting often means highly inefficient incandescent floor-standing luminaires that can consume 190W or more for older lamps.

Permanently installed lighting should reduce the need for such high wattage portable sources by creating variations of light throughout the room, and by reducing areas of shadow. To achieve this, use several luminaires rather than a single luminaire; wall-mounted uplights are a good choice because they are design-neutral and can be repainted. For high-end properties, linear fluorescent or LED cove lighting and other forms of concealed lighting may increase marketability.

People like to control the appearance of their rooms; providing separate switches for each luminaire will make the space more attractive to tenants and will allow them to reduce their energy use.

Although vacancy sensors can be used in living spaces, there are limitations in those living spaces where people are expected to sit still for long periods of time and not move around enough to keep the sensor activated, resulting in lights going off prematurely.

Example 6-23

Question

Can a ceiling fan with integrated lighting be a high efficacy luminaire?

Answer

Yes. Ceiling fan light kits with integral CFL ballasts are available. Some LED lighting may qualify as high efficacy. LED lighting must be certified to the Energy Commission before it can be classified as high efficacy. See Section 6.2.10 for more information about requirements for residential LED lighting.

Some occupants are likely to prefer obscured lamps to visible lamps. A less efficient alternative, when the ceiling fan is installed in a room other than a kitchen, bathroom, garage, laundry room and/or utility room, is to use incandescent lamps on a dimming circuit separate to the fan circuit.

Example 6-24

Question

Are high-efficacy spotlights available, to replace halogen MR16s?

Answer

Some CFLs resemble spotlights, and manufacturers may describe them as spotlights, but they produce the same diffuse light as regular CFLs. Metal halide spotlights with 35W T-6 high efficacy lamps are available, and LEDs can be used as spotlights. LED lighting must be certified to the Energy Commission before it can be classified as high efficacy. See Section 6.2.10 for more information about requirements for residential LED lighting.

6.7 Outdoor Lighting

§150(k)13

Luminaires providing outdoor lighting, including outdoor lighting for private patios on low-rise residential buildings with four or more dwelling units, entrances, balconies, and porches, and which are permanently mounted to a residential building or to other buildings on the same lot shall be high efficacy luminaires, or they may be low efficacy luminaires if they are controlled by all three of the following lighting controls:

1. Controlled by a manual on/off switch, and
2. A motion sensor that is not equipped with an override or bypass switch that disables the motion sensor, and which automatically turns off the lights when no motion is detected, and
3. One of the following three methods to automatically turn the lights off during the daytime:
    a. Photocontrol not having an override or bypass switch that disables the photocontrol; or
    b. Astronomical time clock not having an override or bypass switch that disables the astronomical time clock; or
    c. Energy management control system (EMCS) not having an override or bypass switch that allows the luminaire to be always on.

The above lighting controls must be certified according to the applicable provisions of §119 before they can be installed. See Section 6.3.1 for more information on certifying lighting controls.

6.7.1 Temporary Override of Motion Sensor on Outdoor Luminaires

Exception 2 to §150(k)13

§119 requires that motion sensors shall be capable of automatically turning off all the lights in an area no more than 30 minutes after the area has been vacated. However, there may be occasions where it is desirable to allow residential outdoor lighting to be on for more than 30 minutes after the sensor has stopped sensing activity. For example, when someone is entertaining in their backyard, they may want the lights to stay on longer than 30 minutes. To address this issue, the Residential Lighting Standards allow low efficacy outdoor luminaires to be controlled by a motion sensor controlled by a temporary override switch to bypass the motion sensing function, provided that the motion sensor is automatically reactivated within six hours. The motion sensor must automatically reactivate itself without any action on part of the operator.

Permanently installed luminaires in or around swimming pools, water features, or other locations subject to Article 680 of the California Electric Code need not be high efficacy luminaires. It should not be assumed that all permanently installed lighting in the proximity of water features is subject to Article 680. See Section 6.7.5 for more information about lighting subject to Article 680 of the California Electric Code.

6.7.2 Address Signs

§150(k)14

Internally illuminated address signs shall:

1. Comply with §148, or
2. Not contain a screw-base socket, and consume no more than five watts of power as determined according to §130(d).

6.7.3 Control Requirements

§119

Control devices, including motion sensors and photocontrols, must have an indicator that visibly or audibly informs the operator that the controls are operating properly, or that they have failed or malfunctioned. A light emitting diode (LED) status signal is typically used to meet this requirement. The LED status signal is also practical for use as a commissioning tool. Another option is to use the lamp in the luminaire as the status signal, as long as the lamp fails in the off position. The intention of this requirement is that if the photocell or motions sensor fails the luminaire will not turn on until the control is fixed.

See Section 6.3 for more information about requirements for residential lighting controls.

6.7.4 Hot and Cold Environments

Amalgam CFLs perform better at both very high and very low temperatures than non-amalgam versions, so are appropriate for outdoor lighting, although they can take a few minutes to reach full output. If instant start is important and temperatures may be low, specify a cold-weather-rated ballast. Alternatively, an incandescent source (fitted with a combination photocontrol/motion sensor) may be a good choice.

6.7.5 Exempt Outdoor Lighting

§150(k)13

Lighting that is not permanently attached to buildings, such as decorative landscape lighting when it is not permanently attached to buildings, is not regulated by the Residential Lighting Standards. However, when landscape lighting is attached to a building, it is regulated by the Residential Lighting Standards.

Even though it is not required by the Standards, using a time clock or photocontrol on outdoor lighting not attached to buildings will help to prevent people from accidentally leaving these lights on during the day and will reduce energy use.

Exception 3 to §150(k)13

Permanently installed luminaires in or around swimming pools, water features, or other locations subject to Article 680 of the California Electric Code need not be high efficacy luminaires.

Refer to Article 680 of the California Electric Code to determine if lighting in the proximity of water features is subject to this article. Article 680 covers the following areas related to residential outdoor lighting:

1. Lighting installed directly above the water in an outdoor pool, spa, hot tub, or fountain
2. Pool lighting in an area extending between 5 ft and 10 ft horizontally from the inside walls of a pool
3. Spa, hot tub, or fountain lighting within 5 ft from the inside walls of the spa, hot tub, or fountain
4. Underwater luminaires

Example 6-25

Question

Do all residential outdoor luminaires have to be “cutoff” rated, or “flat glass” types?

Answer

Typical residential outdoor lighting does not have to be “cutoff” rated. However, residential parking lots for eight or more vehicles are required to meet the Nonresidential Standards, which do include cutoff requirements for luminaries greater than 175W. Even though not required for most residential outdoor lighting, cutoff luminaires are usually more efficient at providing light in the required area, so a lower wattage lamp and ballast can be used. Cutoff luminaires also reduce stray light and glare problems which can be a source of legal dispute between tenants or with neighboring property owners.

Example 6-26

Question

My house has a row of small incandescent bollards along the walk way to the front door. Do these have to be high efficacy?

Answer

No. The high efficacy requirement only applies to lighting mounted to the building.

Example 6-27

Question

I would like to install low-voltage landscape lighting in my yard. Are these required to be on a motion sensor and photocontrol?

Answer

No. Even though low-voltage lighting does not qualify as high efficacy lighting, lighting not attached to a building is exempt from this requirement.

Example 6-28

Question

If I install high efficacy lighting on the exterior of the building, can I then install lighting that is not high efficacy in the bathrooms?

Answer

No, there is no provision in the Residential Lighting Standards for a “tradeoff” between exterior lighting and any interior rooms. However, you do have the option of using a motion sensor and automatic daylight control in conjunction with outdoor luminaires that are not high efficacy.

Example 6-29

Question

Does outdoor lighting on the patio of a high-rise residential building have to comply with the Residential or Nonresidential Lighting Standards?

Answer

If the patio outdoor lighting is separately controlled from inside of the dwelling unit, it must comply with the Residential Outdoor Lighting Standards. If the patio outdoor lighting is controlled outside of the dwelling unit, it must comply with the Nonresidential Outdoor Lighting Standards. For example, if the outdoor patio lighting is on a house meter not controlled from inside the dwelling unit, it must comply with the Nonresidential Outdoor Lighting Standards.

§130(c), Outdoor Lighting for High-rise Residential Dwelling Units and Hotel/Motel Guest Rooms, states: “Outdoor lighting that is permanently attached to the building, and is separately controlled from the inside of a high-rise residential dwelling unit or guest room shall comply with §150(k)13.”

6.8 Parking Lots and Parking Garages

§150(k)13
§130, §131, §132, §134
§146, §147
§150(k)15

Parking lots and carports for a total of seven or fewer cars per site must meet the residential outdoor lighting requirements as applicable. See Section 6.7 for information about residential outdoor lighting requirements.

Parking garages, either attached to or detached from the dwelling unit, and which house seven or fewer cars shall meet the residential indoor lighting requirements. See Section 6.65 for information about residential lighting requirements for garages which house seven or fewer cars.

Parking lots and carports for a total of eight or more cars per site must meet the Nonresidential Outdoor Lighting Standards: §130, §132, §134, and §147.

Parking garages that house eight or more cars shall meet the interior lighting control and power requirements of the Nonresidential Standards. See the following sections for a complete view of the Nonresidential Garage Lighting Standards: §130, §131, §134, and §146.

Parking lots and garages for eight or more cars are generally associated with multifamily housing.

The Nonresidential Outdoor Lighting Standards include the following requirements for parking lots and car ports that accommodate a total of eight or more vehicles per site:

1. Luminaires rated for lamps over 100W must have a lamp efficacy of at least 60 lumens per watt, or be controlled by a motion sensor. This requirement primarily affects incandescent luminaires rated for 100W or higher, and mercury vapor luminaires rated for 100W or higher. Incandescent luminaires and mercury vapor luminaires which are rated for less than 100W are not affected by this requirement. Luminaires rated for use only with LED, compact fluorescent, linear fluorescent, metal halide, and high pressure sodium lamps are not affected by this requirement.
2. Luminaires with lamps rated over 175W shall be designated “cutoff” in a photometric test report.
3. Luminaires shall be controlled by a photocontrol, or an astronomical time switch that turns the lighting off when daylight is available.

See the following sections for a complete view of the Nonresidential Outdoor Lighting Standards: §130, §132, §134, and §147.

Residential parking lots should be lighted uniformly to provide a sense of safety; this means that lighting should fill in shadows and dark corners. Two or more less powerful luminaires in different places are preferable to a single luminaire.

Example 6-30

Question

I have a low-rise multi-family complex with a total of 20 parking spaces. However, the parking spaces are arranged throughout the site in groups of only 4 spaces each. Are these parking spaces required to comply with the nonresidential outdoor lighting requirements?

Answer

Yes, these spaces are required to comply with the Nonresidential Outdoor Lighting Standards. Parking lots and carports for a total of eight or more cars per site must meet the nonresidential outdoor lighting requirements.

6.9 Common Areas of Multi-family Buildings

§150(k)16

Lighting for common areas of low-rise residential buildings with four or more dwelling units shall be high efficacy, or shall be controlled by an occupant sensor. Occupant sensors used in common areas may have the capability of turning the lights on automatically.

Common areas include areas like interior hallways, pool house, club house, and laundry.

The quality of light provided in common areas of apartments, condominiums, and townhouses must be particularly high, because older or visually impaired residents must be able to find their way safely through spaces that may contain unexpected obstacles. Providing a sufficient level of light is essential.

The lighting of staircases and stairwells is a particular safety concern; the best way to light stairs is with directional light from above, to maximize the contrast between treads and risers. CFL luminaires with reflectors provide this type of light with great efficiency.

Buildings of three stories or less are classified as low-rise. For buildings higher than three stories the Nonresidential Standards apply to all of the common areas. The local fire code may limit the options for the use of occupant sensors in corridors and stairways.

Example 6-31

Question

Does the lighting for an interior common-area hallway of a low-rise residential building with four or less dwelling units have to comply with the Residential or Nonresidential Lighting Standards?

Answer

No, the lighting of an interior common-area hallway of a low-rise residential building with four or less dwelling units must comply with the Residential Lighting Standards.

Example 6-32

Question

Does the lighting for an interior common-area hallway of a high rise residential building have to comply with the Residential or Nonresidential Lighting Standards?

Answer

The lighting of an interior common-area hallway of a high rise residential building must comply with the Nonresidential Lighting Standards. Lighting inside the dwelling units must comply with the Residential Lighting Standards, and lighting for common areas must comply with the Nonresidential Lighting Standards

§130(b), Indoor Lighting in High-rise Residential Dwelling Units and Hotel/Motel Guest Rooms, states ”The design and installation of all lighting systems, lighting controls and equipment in high-rise residential living quarters and in hotel/motel guest rooms shall comply with the applicable provisions of §150(k).”

6.10 Luminaires Recessed in Ceilings

§150(k)12

6.10.1 Luminaires in Insulated Ceilings

§150(k)12

Luminaires recessed in insulated ceilings can create a thermal bridge through the insulation. Not only does this degrade insulation performance, but it can also permit condensation on the cold surface of the luminaire if exposed to moist air; for instance, in a bathroom.

Luminaires recessed in insulated ceilings must meet three requirements:

1. They must be listed, as defined in §101, for zero clearance insulation contact (IC) by Underwriters Laboratories or other nationally recognized testing/rating laboratories. This enables insulation to be packed in direct contact with the luminaire.
2. They must have a label certifying that the luminaire has airtight construction. Airtight construction means that leakage through the luminaire will not exceed 2.0 CFM when exposed to a 75 Pascals pressure difference, when tested in accordance with ASTM E283.
3. They must be sealed with a gasket or caulking between the luminaire housing and ceiling, and must have all air leak paths between conditioned and unconditioned spaces sealed with a gasket or caulk, to prevent the flow of heated or cooled air out of the living areas and into the ceiling cavity.

The Residential Lighting Standards allow the use of either a gasket or caulking, and do not favor one of these methods over the other. See Section 6.11 for helpful information on what to look for to make sure that all air leak paths have been sealed.

Example 6-33

Question

Are luminaires installed on the inside of the conditioned space in a linear fluorescent “light box” that is recessed into the ceiling considered installed in an insulated ceiling?

Answer

If the inside of the light box is entirely enclosed within the building envelope by a permanent building surface such as gypsum board, and the box is completely sealed with so that there are no air leaks between the conditioned and unconditioned spaces, the building inspector may determine that this space is inside the conditioned area. Luminaires mounted inside the “light box” may be considered to be surface mounted on the inside of the conditioned space. Therefore, the building inspector may determine that these luminaires are not installed in an insulated ceiling.

Example 6-34

Question

If a box made out of fiber board, cardboard, or other such surface is placed over the top of a recessed luminaire, so as to keep insulation from making direct contact with the luminaire, will this still be considered a luminaire in an insulated ceiling?

Answer

This will be considered a luminaire in an insulated ceiling, and the luminaire is still required to meet all of the IC and AT requirements. Section 410.116(B) of the National Electric Code says that thermal insulation shall not be installed above a recessed luminaire, wiring compartment, or ballast unless it is identified for contact with insulation, Type IC. Therefore, a box made out of fiber board, cardboard, or other such surface is placed over the top of a recessed luminaire is not in accordance with the NEC and is not permitted.

Example 6-35

Question

If a recessed luminaire is installed in the first floor ceiling of a two-story residence, and there is no insulation in the first floor ceiling, is the luminaire required to meet the IC/AT requirements?

Answer

No, if there is no insulation in the ceiling, the luminaire it is not required to meet the IC/AT requirements. However, the building inspector may determine that there are significant air leak paths between the first floor ceiling and an exterior wall, and require that the air leak paths be sealed.

Example 6-36

Question

If a factory manufactured fire rated luminaire housing is placed over a recessed luminaire in a multi-family residential dwelling unit, is the luminaire still required to comply with the IC requirements?

Answer

There are limited applications where a non-IC luminaire may be used conjunction with a manufactured fire rated luminaire housing in a multi-family residential dwelling unit. However, the luminaire must still comply with all of the airtight requirements.

A non-IC luminaire may be used in an insulated ceiling in conjunction with a fire rated housing only if all three of the following conditions are met:

1. The multi-family dwelling unit is an occupancy type R1 or R2; and
2. The luminaire is recessed between different dwelling units that are regulated by California Building Code Section 712.4.1.2; and
3. The manufactured fire rated housing is rated for a minimum of 1 hour fire in accordance with UL 263.

6.10.2 Ballasts for Recessed Luminaires

§119(n)

For recessed luminaires with compact fluorescent ballasts, the ballasts must be certified to the Energy Commission. For additional information on certifying ballasts and other devices to the Energy Commission, see Section 6.3.

The luminaire must be designed and installed to allow ballast maintenance and replacement to be readily accessible to building occupants from below the ceiling without requiring the cutting of holes in the ceiling.

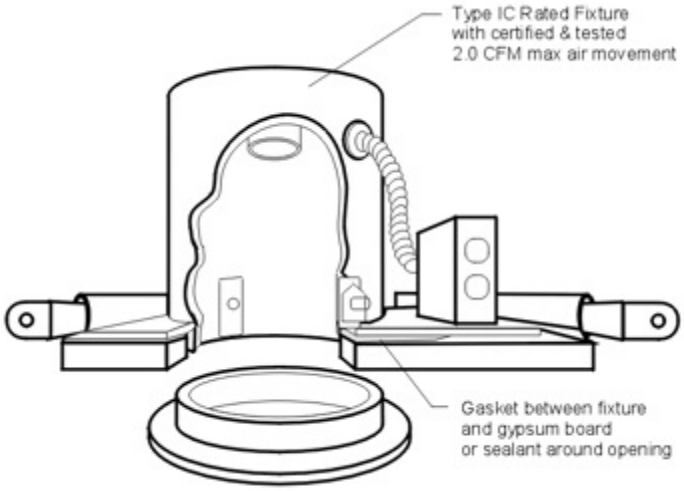

Figure 6-9 – Airtight, Type IC Luminaire

6.10.3 Exhaust Fans

Note to §150(k)12B

An exhaust fan is not required to be certified airtight.

Note to §150(k)12C

An exhaust fan is required to be sealed with a gasket or caulk between the exhaust fan housing and the ceiling. However, the exhaust fan housing is not required to be certified airtight.

§150(k)6

Lighting attached or integral to exhaust fans is required to meet all of the applicable lighting requirements of §150(k). However, lighting which is part of a kitchen stove exhaust hood is not required to comply with §150(k).

See Sections 6.2.7 and 6.2.8 for more information about lighting attached to or integral to exhaust fans.

6.11 Inspection Protocol for Recessed Luminaires in Insulated Ceilings

§150(k)12

Luminaires recessed in insulated ceilings must be IC rated and have a gasket or caulking between the housing and ceiling to prevent the flow of heated or cooled air between conditioned and unconditioned spaces. The luminaire must include a label certifying airtight or similar designation to show air leakage less than 2.0 CFM at 75 Pascals when tested in accordance with ASTM E283. The label must be clearly visible for the building inspector. The building inspector may verify the IC and ASTM E283 labels at a rough inspection. If verified at final inspection the building inspector may have to remove the trim kit to see the labels.

The ASTM E283 certification is a laboratory procedure intended to measure only leakage of the luminaire housing or, if applicable, of an airtight trim kit, and not the installation. Luminaire housings labeled as airtight, airtight ready or other airtight designation do not establish that the luminaire has been installed airtight. The luminaire manufacturer must provide instructions that explain the entire assembly required to achieve an airtight installation.

The Residential Lighting Standards do not favor the use of gaskets over caulk, or the use of caulk over gaskets for compliance with the Standards. Because a luminaire housing is not always installed perfectly parallel to the ceiling surface, both methods have their benefits as follows:

1. Caulk will generally fill in and seal wide and uneven gaps. However, after the caulk dries, it may permanently attach the luminaire housing or trim to the ceiling surface. Therefore, the caulk may need to be cut away from the ceiling surface in the event that a luminaire housing or trim needs to be moved away from the ceiling.
2. Many gaskets allow the luminaire housing or trim to be readily moved away from the ceiling surface after it has been installed. However, if the gasket is too thin, or not made out of an air stopping type of material, it may not sufficiently reduce the air flow between the conditioned and unconditioned spaces.

There are several different methods used by manufacturers to meet the airtight standards. The Residential Lighting Standards do not favor one airtight method over another.

The primary intent is to install a certified airtight luminaire so that it is sufficiently airtight to prevent the flow of heated or cooled air between conditioned and unconditioned spaces. All air leak paths through the luminaire assembly or through the ceiling opening must be sealed. Leak paths in the installation assembly that are not part of the ASTM E283 testing must be sealed with either a gasket or caulk. One example may apply for assemblies where a certified airtight luminaire housing is installed in an adjustable mounting frame; all air leak paths between the certified airtight luminaire housing and the adjustable mounting frame must be sealed, either with a gasket or caulk.

Following is the process for verifying that the requirements for an airtight installation are met.

1. Manufacturer specifications (a "cut sheet") of the certified airtight luminaire housing(s) and installation instructions must be made available with the plans to show all components of the assembly that will be necessary to insure an airtight installation consistent with §150(k)5. This allows the building inspector to know what method the luminaire manufacturer specifies to achieve airtight installation, and therefore, at what phase of construction the building inspector must inspect the luminaire for airtight compliance.
2. One of the following primary methods is specified by the luminaire manufacturer to insure an airtight seal of the certified airtight housing to the ceiling:
    i. A gasket is attached to the bottom of the certified airtight housing prior to the installation of the ceiling (i.e. drywall or other ceiling materials) to create an airtight seal. The gasket may be preinstalled at the factory, or may need to be field installed. For field installed gaskets, instructions on how the gasket is to be attached must be provided by the manufacturer. The luminaire must be installed so that the gasket will be sufficiently compressed by the ceiling when the ceiling is installed.
    ii. A gasket is applied between the certified airtight housing and the ceiling opening after the ceiling has been installed. The gasket creates the airtight seal. The cut sheet and installation instructions for achieving the airtight conditions must show how the gasket is to be attached.
    iii. Caulk is applied between the certified airtight housing and the ceiling after the ceiling has been installed. The caulk creates the airtight seal. The cut sheet or installation instructions for achieving the airtight conditions must specify the type of caulk that must be used and how the caulk must be applied.
    iv. A certified airtight trim kit is attached to the housing after the ceiling has been installed. The certified airtight trim kit in combination with the luminaire housing makes the manufactured luminaire airtight. Note that a decorative luminaire trim that is not ASTM E283 certified does not make the manufactured luminaire airtight. Most decorative luminaire trims are not designed to make a luminaire airtight. Rather, these trims are used to provide a finished look between the ceiling and luminaire housing, and may include a reflector, baffle, and/or lens. However, some trim kits are specifically designed to be a critical component used to make a luminaire installation airtight. These trim kits must be certified airtight in accordance with ASTM E283.

Certified airtight trim kits typically consist of a one-piece lamp-holder, reflector cone, and baffle.

The cut sheet and installation instructions for achieving the airtight conditions must show which certified airtight trim kits are designed to be installed with the luminaire housing, and how the certified airtight trim kits must be attached. A gasket must be installed between the certified airtight trim kit and the ceiling.

3. The following methods for insuring an airtight seal between the certified airtight housing or certified airtight trim and the ceiling must be field verified at different phases during construction:

    i. Gasket attached to the bottom of the certified airtight housing must be inspected prior to the installation of the ceiling when the rough-in electrical work is visible. The inspector must review the cut sheet or installation instructions to make sure the housing and gasket have been installed correctly. All gaskets shall be permanently in place at the time of inspection. It is important that once the ceiling material is installed the gasket will be in continuous, compressed contact with the backside of the ceiling and that the housing is attached securely to avoid vertical movement. The housing must be installed on a plane that is parallel to the ceiling plane to assure continuous compression of the gasket.

    ii. Gasket applied between the certified airtight housing and the ceiling after the ceiling has been installed must be inspected after the installation of the ceiling. The inspector must review the cut sheet or installation instructions to make sure the housing and gasket have been installed correctly. The gasket shall be permanently in place at the time of inspection. It is important that the gasket is in continuous, compressed contact with the ceiling, and that the housing is attached securely to avoid vertical movement.

    iii. Caulk applied between the certified airtight housing and the ceiling after the ceiling has been installed must be inspected after the installation of the ceiling. The inspector must review the cut sheet or installation instructions to make sure the housing has been installed correctly and the caulk has been applied correctly. It is important and that the housing is attached securely to avoid vertical movement.

    iv. Certified airtight trim kit must be inspected after the installation of the ceiling and the installation of the trim. The inspector must review the cut sheet or installation instructions to make sure the luminaire

housing and the certified airtight trim kit have been installed correctly. It is important that the housing and the certified airtight trim kit are attached securely to avoid vertical movement. The ASTM E283 certification is a laboratory procedure where the trim kit is tested on a smooth mounting surface. However, it is common for certified airtight trim kits to be installed against a textured ceiling or other irregular ceiling surface. It is important that the gasket is in continuous, compressed contact with the ceiling and the certified airtight trim kit. Therefore, it is important to visually inspect the certified airtight trim kit and gasket next to the ceiling to assure that a continuous seal has been produced.

Certified airtight trim kits may be installed on luminaire housings that may or may not be certified airtight. If the trim kit is certified airtight, it must also have a sealed gasket between the trim kit and ceiling.

6.12 Recommendations for Luminaire Specifications

It is important that luminaires are described fully in the specifications and on drawings so that contractors and subcontractors provide and install residential lighting systems that comply with the Residential Lighting Standards. The specifications should be clear and complete so that contractors understand what is required to comply with the Standards.

Following are a few suggestions to help reduce the chance that there may be costly change orders required to bring a non-complying building into compliance.

1. Include all applicable residential lighting requirements in the general notes on the drawings and other bid documents.
2. Include the residential lighting requirements with each luminaire listed in the lighting schedule text and details, for example:

Table 6-6 – Recommendations for Luminaire Specifications

Luminaire Type	Recommended Type of Notes for Luminaire Schedule
Bath Bar	Bath bar, incandescent lamps, must be controlled by a vacancy sensor per §150(k)
Ceiling fixture (i.e., for a bathroom application)	Fluorescent surface-mounted ceiling luminaire, with one F32-T8 fluorescent lamp and electronic ballast, meeting the requirements of §150(k)
Fluorescent Recessed Can (i.e., for a kitchen application)	Fluorescent recessed can, with one 26 W pin-based compact fluorescent lamp, meeting the electronic ballast, minimum efficacy, IC, and airtight requirements of §150(k)
Incandescent Recessed Can (i.e., for a Kitchen application)	Incandescent recessed can with a maximum relamping wattage of 75 W, meeting the labeling, IC, and Airtight requirements of §150(k)
Incandescent Recessed Can (i.e., for a Dining Room application)	Incandescent recessed can, meeting the IC, and Airtight requirements of §150 (k), and controlled by a dimmer switch meeting the requirements of Sections 119 and 150 (k)
Chandelier	Chandelier, controlled by a dimmer switch meeting the requirements of §150(k)
Vacancy Sensor (Manual-on Occupant Sensor)	Vacancy sensor meeting the requirements of Sections 119 and 150(k)

7 Performance Method

7.1 Overview

This chapter explains the performance method of complying with the Standards. The method works by calculating the Time Dependent Valuation (TDV) energy use of the proposed design and comparing it to the TDV energy for the standard design (the budget). The standard design is a building with the same size as the proposed design, but incorporating all features of Prescriptive Package D. The energy budget includes water heating, space heating, and space cooling. Lighting is not included in the performance calculations. If the proposed design uses equal or less TDV energy than the standard design, then the building complies. This method provides maximum flexibility because the building designer may trade-off the energy performance of different building components and design features to achieve compliance.

Compliance credit is available if the proposed design exceeds the Package D requirements in these areas. There are significant savings opportunities, including:

- Ceiling insulation
- Wall insulation
- Floor insulation
- Slab edge insulation
- Window performance (U-factor and SHGC)
- Operable or Fixed exterior shading devices
- Window orientation
- Thermal mass
- Cool roof
- Radiant barrier
- Air retarding wrap
- Blower door testing
- Proper refrigerant charge in air conditioners
- Heating and cooling equipment efficiency
- High EER air conditioners
- Quality insulation installation
- Maximum cooling capacity
- Supply duct location
- Duct insulation

- Duct sealing, minimized duct surface area, and increased R-value
- Air handler watt draw
- Adequate cooling air flow
- Ice storage air conditioners
- Air conditioners with evaporatively-cooled condensers
- Evaporative coolers
- Roof type
- Insulation above the roof deck
- Mass above the roof deck (> 25 lbs/ft²)
- Passive attic ventilation
- Zonal control
- Water heater efficiency and distribution system type

Credit for many of the above features cannot be taken in the prescriptive packages, but can be taken under the performance approach.

The performance method is the most popular compliance method under the Standards, with more than 95 percent of building permit applications being submitted in this manner. The method is especially popular with production homebuilders because they can optimize performance and achieve compliance at the lowest possible cost.

Computer programs used for compliance are approved by the Energy Commission as being capable of calculating space conditioning and water heating energy use in accordance with a detailed set of rules. The computer programs simulate or model the thermal behavior of buildings by calculating hourly heat flows into and out of the various thermal zones of the building. The tools must demonstrate their accuracy in analyzing annual space conditioning and water heating energy use of different building conservation features, levels and techniques.

Approved computer programs must be able to:

- Automatically calculate the standard design TDV energy budget for heating, cooling, and water heating.
- Calculate the TDV energy use of the proposed design in accordance with specific fixed inputs, restricted inputs and user-specified inputs.
- Print the appropriate standardized compliance reports.

This chapter provides only a general overview of the performance method. Each computer program that is approved by the Energy Commission is required to have a compliance supplement that provides more detailed information regarding the use of the software for compliance purposes. The requirements for the compliance supplement along with other requirements for approved computer programs are documented in the 2008 Residential ACM Manual.

7.2 What's New for 2008

The most significant change in the performance method for low-rise residential buildings for the 2008 Standards is the use of the Unconditioned Zone Model (UZM) to model attic spaces with roofs and ceilings and a new model for slab heat gains and losses. New prescriptive standards for cooling coil air flow and furnace fan Watt draw are also implemented in the Compliance Software allowing tradeoffs. New mandatory requirements for mechanical whole building ventilation along with changes in default envelope leakage have changed the potential performance tradeoffs for tested envelope leakage. Energy impacts of certain ventilation systems installed to meet the new ventilation requirements can also be traded in the performance method. In addition, the 2008 Standards expanded the requirement for insulated kitchen piping to apply - no matter what the diameter. Adjustments and additions were made to the water heating distribution multipliers for demand recirculation and adjustment factors have been added to low-rise residential buildings for instantaneous gas water heaters and buffer tanks. For multi-family buildings an adjustment factor has been added for monitored systems or systems with automated time adjusted volume controls.

7.3 The Process

Any approved computer program may be used to comply with the Standards using the performance method. The following steps are a general outline of the typical computer program procedure:

1. Collect all necessary data—areas and thermal characteristics of fenestration products, walls, doors, roofs, ceilings and floors, construction assemblies, including fenestration U-factor and solar heat gain coefficients, equipment efficiencies, water heating information from drawings and specifications. Although most computer programs require the same basic data, some information and the manner in which it is organized may vary according to the particular program used. Refer to the Vendor's Compliance Software User Manual for additional details.
2. Enter data into the computer program describing the surface areas and thermal performance properties of building envelope components, water heating system and equipment, and HVAC system and equipment. Input values and assumptions must correctly correspond to the proposed design and conform to the required mandatory measures.
3. Launch a computer run to automatically calculate the TDV energy of the standard design and the proposed design.

The building complies if the total TDV energy use of the proposed design is the same as or less than the standard design TDV energy budget.

When creating a computer input file, use the space provided for the project title information to concisely and uniquely describe the building being modeled. User-designated names should be clear and internally consistent with other orientations and/or buildings being analyzed. Title names and explanatory comments should assist individuals involved in both the compliance and enforcement process.

7.3.1 Defining the Standard Design

Each approved computer program must automatically calculate the TDV energy use of the standard design. The standard design is created based upon data entered for the proposed design using all the correct fixed and restricted inputs.

The computer program defines the standard design by modifying the geometry of the proposed design and inserting the building features of prescriptive Package D. This process is built into each approved computer program and the user cannot access it. Key details on how the standard design is created and calculated by the computer programs, including the listing of fixed and restricted input assumptions are documented in the 2008 Residential ACM Manual.

The standard design assumes the same total conditioned floor area, conditioned slab floor area, and volume as the proposed design, and the same gross exterior wall area as the proposed design, except that the wall area in each of the four cardinal orientations is equal. The standard design uses the same roof/ceiling area, raised floor area, slab-on-grade area and perimeter as the proposed design, assuming the standard insulation R-values required in the prescriptive packages.

Total fenestration area in the standard design is equal to the proposed design if the fenestration area in the proposed design is less than or equal to 20 percent of the floor area, otherwise, the fenestration area of the standard design is equal to 20 percent of the floor area. Fenestration area in the standard design is evenly distributed between the four cardinal orientations. SHGC and U-factors are those listed in Package D, and no fixed shading devices such as overhangs are assumed for the standard design.

The standard design includes minimum efficiency heating and cooling equipment, as well as the minimum duct R-value with ducts in a vented attic if the proposed design has an attic. Ducts are assumed to be sealed as required by Package D. The standard design also has correct refrigerant charge as required by Package D.

For water heating systems that serve individual dwelling units, the standard design is a gas storage water heater with an EF of 0.575. The standard design has a standard distribution system, i.e., the first 5 ft of hot and cold water piping from heating source and the entire length of piping to kitchen fixtures are insulated as specified in §150(j)2A or §150(j)2B

For water heating systems that serve multiple dwelling units, the standard design system type (central or individual water heaters) is the same as the proposed design system. Other details are provided in the *2008 Residential ACM Manual*.

7.3.2 Standard Reports

For consistency and ease of enforcement, the manner in which building features are reported by Compliance Software programs is standardized. Energy Commission-approved Compliance Software programs must automatically produce compliance reports in this standard format. The principal report is the Certificate of Compliance (CF-1R).

The CF-1R has two highly visible sections, one for special features and modeling assumptions, and a second for features requiring field verification and/or diagnostic testing by approved HERS raters. These two sections serve as a punch list for special consideration during compliance verification by the local

enforcement agency and the HERS rater. Items listed in the Special Features and Modeling Assumptions section indicate that unusual features or assumptions are used for compliance, and they call for special care by the local enforcement agency. Items listed in the HERS Required Verification section are for features that rely on diagnostic testing and independent verification by approved HERS providers/raters to ensure proper field installation. Diagnostic testing and verification by HERS providers/raters is in addition to local enforcement agency inspections.

Table 7-1 lists some of the measures that are to be listed on the CF-1R. For each measure, the table indicates whether building official verification, HERS rater field verification, or HERS rater diagnostic testing is required.

Table 7-1 – Special Features to be Listed on CF-1R

Category	Building Official Verification of Special Features	HERS Rater Verification	HERS Rater Diagnostic Testing	Measure
General	Y			Compliance for all orientations
Ducts			Y	Duct leakage
		Y		Less than 12 ft. of duct outside conditioned space
	Y			100% of ducts in crawlspace/basement
	Y			Supply registers within two ft of floor
		Y		Diagnostic supply duct location, surface area, and R-value
	Y			Ducts in attic with radiant barriers
	Y			Duct increased R-value
		Y		Buried ducts
		Y		Non-standard duct location
Envelope	Y			Air retarding wrap
			Y	Reduced infiltration (blower door). May also require mechanical ventilation.
		Y		Quality insulation installation
	Y			Solar gain targeting (for sunspaces)
	Y			Inter-zone ventilation
	Y			Radiant barrier
	Y			Non-default vent heights
	Y			Vent area greater than 10%
	Y			Exterior shades
	Y			High thermal mass
	Y			Metal framed walls
	Y			Sunspace with interzone surfaces
	Y			Cool roof
HVAC Equip		Y		Charge Indicator Light
			Y	Refrigerant charge
		Y		High EER
	Y			Zonal control
			Y	Air handler fan power
			Y	Adequate air flow
	Y			Hydronic heating systems
		Y		Air conditioner size
Water heating	Y			Combined hydronic
	Y			Non-standard water heaters (wh/unit)
	Y			Water heater distribution credits
	Y			Non-NAECA water heater
	Y			High EF for existing water heaters

A sunspace is a passive solar system consisting of an unconditioned space facing south or near south. See Vendor's Compliance Software User Manual for modeling these spaces.

7.3.3 Professional Judgment

Some modeling techniques and compliance assumptions applied to the proposed design are fixed or restricted. There is little or no freedom to choose input values for compliance modeling purposes. However, other aspects of computer modeling remain for which some professional judgment is necessary. In those instances, exercise proper judgment in evaluating whether a given assumption is appropriate.

The enforcement agencies have full discretion to reject a particular input, especially if the user has not substantiated the value with supporting documentation.

Two questions may be asked in order to resolve whether professional judgment has been applied correctly in any particular case:

1. Is a simplified assumption appropriate for a specific case? If simplification reduces the predicted energy use of the proposed building when compared to a more explicit and detailed modeling assumption, the simplification is not acceptable (i.e., the simplification must reflect higher energy use than a more detailed modeling assumption).
2. Is the approach or assumption used in modeling the proposed design consistent with the approach or assumption used in generating the energy budget?

One must always model the proposed design using the same assumption and/or technique used by the program in calculating the energy budget unless drawings and specifications indicate specific differences that warrant conservation credits or penalties.

Any unusual modeling approach, assumption or input value should be documented with published data and should conform to standard engineering practice.

For assistance in evaluating the appropriateness of particular input assumptions, call the Energy Hotline or call the vendor of the Compliance Software program.

7.4 Mixed Occupancy Buildings

§100(e)

Some residential buildings have areas of other occupancies, such as retail or office, in the same building. An example of this might be a three-story building with two floors of apartments above ground floor shops and offices. The first thing to consider when analyzing the energy compliance of a mixed occupancy building is the type and area of each occupancy type.

Depending on the area of the different occupancies, you may be able to demonstrate energy compliance as if the whole building is residential for the heating cooling and water heating requirements. This is allowed if the residential occupancy accounts for greater than 80 percent of the conditioned floor area of the building (or permitted space). Lighting compliance must be based on the requirements for the actual occupancy type.

Note: Mandatory measures apply separately to each occupancy type regardless of the compliance approach used. For example, if complying under the mixed occupancy exception, both residential documentation (MF-1R form) and nonresidential documentation for mandatory measures must be submitted with other compliance documentation.

If the building design does not fit the criteria described above for a dominant occupancy, then the low-rise residential occupancy type must be shown to comply on its own. The remaining occupancy types must be shown to comply separately either by independent compliance for each occupancy or (for the nonresidential performance approach) by combining nonresidential occupancies in accordance with the rules of the Nonresidential ACM Manual. This may be done by using any of the approved prescriptive or performance methods available for each occupancy type. As a result, documentation for each occupancy type must also be considered separately, and a Certificate of Compliance must be submitted for each occupancy type. Note that mixed high-rise and low-rise residential occupancies will not occur in the same building because the designation applies to the building.

7.5 Multifamily Buildings

§101(b)

Envelope and HVAC equipment requirements for multifamily apartment buildings with four or more habitable stories (and hotels or motels of any number of stories) are covered by the Nonresidential Standards. These are explained in the Nonresidential Compliance Manual. Multifamily buildings with one to three habitable stories are considered low-rise residential buildings and are discussed in this manual.

Compliance for a low-rise multifamily building may be demonstrated either for the building as a whole or on a unit-by-unit basis. Floors and walls between dwelling units are considered to have no heat transfer, and may be ignored in performance calculations.

7.5.1 Whole-building Compliance Approach

The simplest approach to compliance for a multifamily building is to treat the building as a whole, using any of the compliance paths described in earlier chapters. In practice, this process is similar to analyzing a single family dwelling, except for some differences in water-heating budgets and internal gains, as described in the *2008 Residential ACM Manual*.

Multifamily buildings that utilize efficiency measures that require HERS field verification must submit separate compliance documentation for each individual dwelling unit in the building as specified by Reference Residential Appendix Section RA2.3. This requirement does not prevent use of the whole-building compliance approach for submittal of the Certificate of Compliance to the Enforcement Agency, however when the whole-building compliance approach has utilized a measure that requires HERS field verification, a separate copy of the whole-building Certificate of Compliance must be submitted to the HERS provider for every dwelling unit in order to satisfy the requirements of the HERS provider

data registry documentation procedures. In practice, the Certificate of Compliance information may not need to be submitted to the HERS provider more than one time, but a relationship must be established in the HERS provider data registry between the whole-building Certificate of Compliance and the corresponding dwelling-specific Installation Certificates, and the dwelling-specific Certificates of Field Verification and Diagnostic Testing. Thus, for the whole-building compliance approach in a multifamily building that has utilized a compliance option that requires HERS verification, the required energy compliance documentation for each dwelling unit should consist of a whole-building Certificate of Compliance (CF-1R), a dwelling-specific Installation Certificate (CF-6R), and a dwelling-specific Certificate of Field Verification and Diagnostic Testing (CF-4R).

When the whole-building compliance approach is utilized for a multifamily building, some of the energy efficiency measures that require HERS field verification cannot be used for compliance credit in the performance calculations. These HERS measures are excluded from the whole-building compliance approach because they require dwelling-specific data input to the Compliance Software, and dwelling-specific data output from the Compliance Software that must be shown on the Certificate of Compliance, therefore they cannot be properly documented using a single whole-building Certificate of Compliance.

The measures that cannot be utilized for the multifamily whole-building compliance approach are:

- Buried Ducts credit
- Deeply Buried Ducts credit
- Reduced Supply Duct Surface Area credit
- Maximum Rated Total Cooling Capacity credit
- Building Envelope Sealing credit (blower door test)

All other HERS measures are available for use with the multifamily whole-building compliance approach.

When the Standards require registration of the compliance documents, the information for the Certificate of Compliance (CF-1R), Installation Certificate (CF-6R), and Certificate of Field Verification and Diagnostic Testing (CF-4R) must be submitted electronically to the HERS provider data registry. Refer to Reference Residential Appendix RA2 for additional information on these document registration procedures.

7.5.2 Unit-By-Unit Compliance Approach – Fixed Orientation Alternative

The unit-by-unit compliance approach for multifamily buildings requires that each dwelling unit must demonstrate compliance separately. The fixed orientation alternative requires that each unique dwelling unit in the building, as determined by orientation and floor level, must be separately modeled using an approved computer program. In this approach, surfaces that provide separation between dwelling units may be ignored since they are assumed to have no heat loss or heat gain associated with them. Surfaces that provide separation between dwelling units and central/interior corridor areas must be modeled for heat transfer if the corridor area is not directly conditioned (see Reference Joint Appendix JA1

for definition). If the corridor area is conditioned, the corridor area may be modeled separately.

Different orientations and locations of each unit type within the building must be considered separately. That is, a one-bedroom apartment on the ground floor of a three-story building is different from the same plan on a middle floor or the top floor, even if all apartments have the same orientation and are otherwise identical. Likewise, end units must be modeled separately from the middle units; and opposite end units must both be modeled. With this approach every unit of the building must comply with the Standards, so this approach is more stringent than modeling the building as a whole (see Figure 7-1).

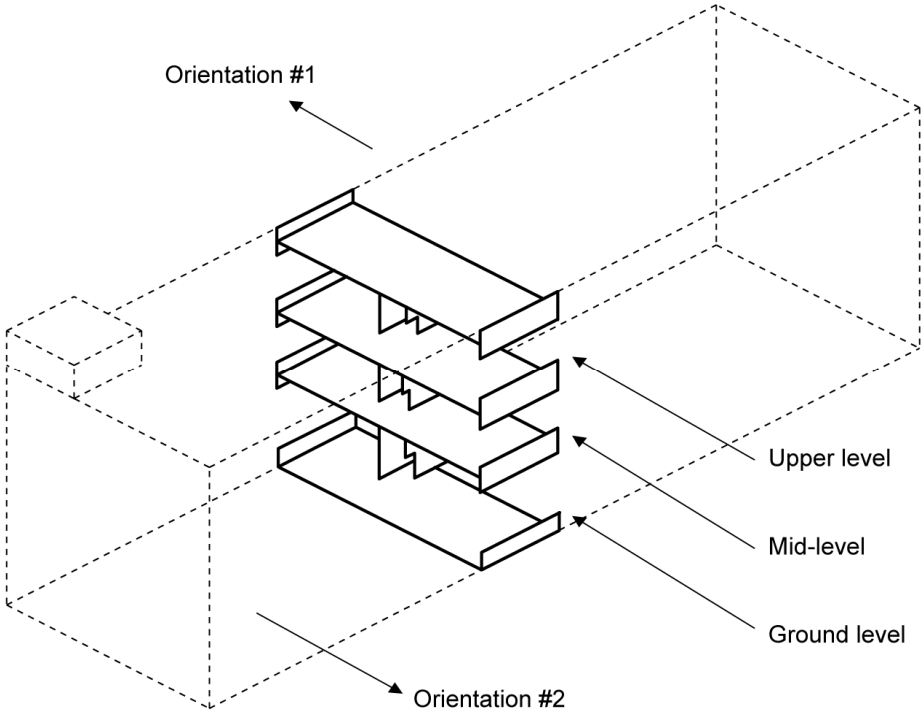

Figure 7-1 – Multifamily Building Compliance Option

Demonstrate Compliance for Each Generic Unit Type in Each of its Characteristic Locations

Example 7-1

Question

When preparing compliance calculations for a three-story apartment complex, I have the option of showing compliance for each dwelling unit or for the entire building. If I use the individual dwelling unit approach, do I need to provide calculations for every dwelling unit?

Answer

Each dwelling unit must comply with the Standards when using this approach. When dwelling units have identical conditions, the calculations can be combined. This means you will show separate compliance for all unique conditions, such as:

- Front-facing North

- Front-facing West

- Front/side walls facing East and North
- Front/side walls facing East and South
- Middle units and both end units
- Exterior roof, no exterior floor
- Exterior floor, no exterior roof

Surfaces separating two conditioned spaces (such as common walls) have little heat transfer and can be disregarded in the compliance calculations.

7.5.3 Unit-By-Unit Compliance Approach – Multiple Orientation Alternative

Another option for showing unit-by-unit compliance for a multifamily building is similar to a method that may be utilized for single family master plans in subdivisions (described in Section 7.6).

The computer method may be used to demonstrate that a dwelling unit plan in a multifamily building complies regardless of how it is oriented. To assure compliance in any orientation, the annual energy consumption must be calculated in each of the four cardinal orientations: true north, true east, true south and true west. With this option, a dwelling unit plan must be modeled using the identical combination of energy features and levels in each orientation, and must comply with the energy budget in each case. If a multifamily dwelling floor plan is utilized as both reversed and original/standard floor plan types, either the reversed plan or the original/standard plan may be used to demonstrate compliance, but compliance must be shown in all four cardinal orientations using only one of the plan types.

Each unique dwelling unit plan must be modeled using the worst-case condition for the energy features that the plan may contain within the multifamily building (e.g. highest glazing percentage, least overhangs, largest wall surface area, and with exterior walls instead of party walls if applicable). See Reference Residential Appendix RA 2.6.1 for information that describes how to determine when a dwelling is considered to be a unique model. Each unique dwelling plan must also be modeled separately for each unique floor level (see Figure 7-1).

7.6 Subdivisions and Master Plans

Subdivisions often require a special approach to energy compliance, since they generally include one or a few basic building or unit plans repeated in a variety of orientations. The basic floor plans, as *drawn*, may also be used in a mirror image or *reversed* configuration.

There are two compliance options for subdivisions. They are:

1. Model each individual building, or building condition, separately according to its actual orientation.
2. Model all four cardinal orientations for each building or plan type with identical conservation features for no orientation restrictions.

7.6.1 Individual Building Approach

The most straightforward compliance option for subdivisions is to analyze each individual building in the project separately using any compliance method. This may be practical for subdivisions with only custom buildings, or with only one or two specific orientations for each building plan. This approach requires that each unit comply separately, with separate documentation submitted for each unit plan in the orientation in which it will be constructed.

7.6.2 Multiple Orientation Alternative: No Orientation Restrictions

§151(c)

The computer method may be used to demonstrate that a single family dwelling plan complies regardless of how it is oriented within the same climate zone. To assure compliance in any orientation, the annual energy consumption must be calculated in each of the four cardinal orientations: true north, true east, true south and true west. With this option, the buildings must have the identical combination of conservation measures and levels in each orientation and comply with the energy budget in each case.

If a building floor plan is reversed, either the original plans or the reversed plans may be shown to comply in all four cardinal orientations.

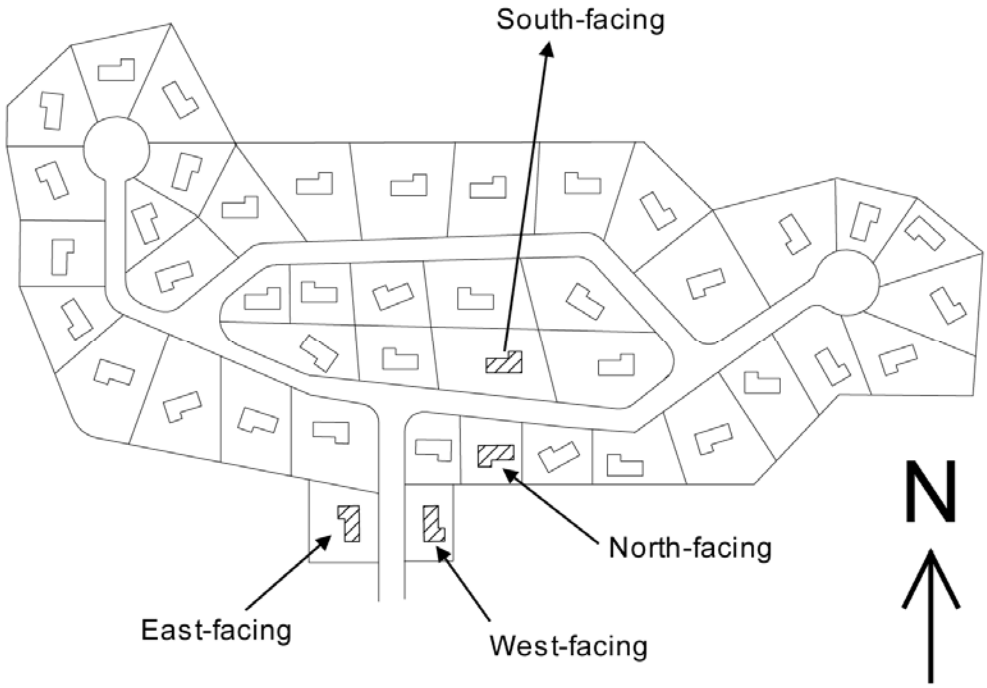

Figure 7-2– Subdivisions and Master Plans Compliance Option

Demonstrate Compliance for Each Cardinal Orientation for Each Basic Model Type

For compliance, submit Certificate of Compliance documentation of the energy budgets for each of the four orientations to the enforcement agency. Only one CF-1R form that documents compliance for all four orientations, is required to be submitted to the enforcement agency for each unique plan.

Master plans that utilize the multiple orientation alternative, that utilize a compliance approach that requires HERS field verification, must submit a separate copy of the multiple orientation master plan Certificate of Compliance to the HERS provider for every dwelling unit in the subdivision in order to satisfy the requirements of the HERS provider data registry documentation procedures. In practice, the Certificate of Compliance information for each multiple orientation master plan may not need to be submitted to the HERS provider data registry more than one time, but a relationship must be established in the HERS provider data registry between the applicable multiple orientation master plan Certificate of Compliance and the corresponding dwelling-specific Installation Certificates (CF-6R), and the dwelling-specific Certificates of Field Verification and Diagnostic Testing (CF-4R). Thus, for the multiple orientation compliance approach in a master plan subdivision that has utilized a compliance option that requires HERS verification, the required energy compliance documentation for each dwelling unit should consist of a multiple orientation master plan Certificate of Compliance (CF-1R), a dwelling-specific Installation Certificate (CF-6R), and a dwelling-specific Certificate of Field Verification and Diagnostic Testing (CF-4R).

7.7 HVAC Issues

7.7.1 No Cooling Installed

When a building does not have a proposed cooling system, there is no compliance credit. The air conditioning system is modeled to be equivalent to Package D. A hypothetical cooling duct system is modeled as equivalent to Package D (e.g., Attic, R-6) or as matching the heating system ducts. Modeling no ducts is not an appropriate assumption.

7.7.2 Equipment without SEER or HSPF

For equipment without a tested SEER, the EER is used in place of the SEER. Another option is to use the EER of the equipment and use it for both the SEER and EER entry. If this approach is used, the EER must be verified by a HERS rater.

Equipment without an HSPF rating is assumed to have 3.41 HSPF (electric resistance), 3.55 (electric radiant), or an HSPF calculated from a COP as HSPF = (3.2 x COP) – 2.4.

7.7.3 Multiple HVAC Systems

Buildings with multiple HVAC systems not meeting the zonal control criteria (see Section 4.4.5) may model each zone separately without taking credit for zonal control.

For buildings using more than one system type, equipment type or fuel type, where the types do not serve the same floor area, model either the building zone or enter the floor area served by each type. Note that if both zones are associated with attic space then a portion of the attic must be modeled with each zone.

For floor areas served by more than one heating or cooling system, equipment, or fuel type must simulate the building using the system with the most TDV energy consumption for compliance. For additions, with electric resistance heat and another heating system (except for wood heating) the electric resistance shall be deemed to be the most TDV energy consuming system. Supplemental heating units may be installed in a space served directly or indirectly by a primary heating system provided that the thermal capacity of the supplement unit does not exceed two kilowatts or 7,000 Btu/h and is controlled by a time-limiting device not exceeding 30 minutes.

For floor areas served by more than one cooling system, equipment, or fuel type, indicate which system, equipment, and fuel type satisfies the cooling loads.

When there is more than one system meeting the heating or cooling load for the same space, all systems must still meet all the mandatory requirements of the standards.

For example, a building using an appliance rated gas fireplace in combination with a central gas furnace. The central furnace would be used as the primary system and the fireplace would be treated as the supplemental system. The controls for the fireplace would not need to meet the setback thermostat requirements of §112(c) due to the exception.

For rooms such as the bedroom or bathroom spot heating with a supplemental system may be desirable. An exemption to Tables 151-C, D & E of the Standards is provided for installing either a two kW electric resistance or 7,000 Btu gas heater, with a 30-minute timer control for such instances. Therefore, this type of supplemental space heating need not meet the setback thermostat requirement.

7.7.4 Gas-Fired Cooling Systems

Gas-fired (absorption) cooling systems are modeled three descriptors, COP95, the rated COP for the gas portion, CAP95, the rated capacity, and PPC, the parasitic electric energy at rated conditions in Watts.

See Vendor's Compliance Software User Manual for details on how to model these types of systems.

7.7.5 Existing + Addition + Alteration Approach

The performance approach may be used to show compliance for alterations in existing buildings, new additions, and Existing + Addition + Alteration. This topic is discussed in Chapter 8, Section 8.7.3 Existing + Addition + Alteration Approach of this manual.

8 Additions, Alterations, and Repairs

8.1 Introduction

Additions, alterations, and repairs are common construction projects for California homeowners. The Standards apply to both additions and alterations, but not to repairs.

Additions

§152(a)

This section is also shown in Appendix B of this manual.

An addition is a change to an existing building that increases conditioned floor area and volume. Converting a garage or unheated basement into a conditioned living space, enclosing and conditioning a patio, or building onto a home are all examples of an addition, as is a bay window that extends all the way to the floor and therefore increases both floor area and volume.

Alterations

§152(b)

This section is also shown in Appendix B of this manual.

Alterations are changes to a building's envelope, space-conditioning system, water-heating system or lighting system, that are not additions. An alteration does not increase both conditioned volume and floor area. Examples include the following:

1. Adding a new skylight (or window including a bay window that does not extend to the floor) to an existing building. If the skylight has a light well that cuts through an existing attic, the alteration adds conditioned volume but is not an addition because it does not add conditioned floor area.
2. Adding a new greenhouse window to an existing building. This is an alteration rather than an addition because it adds conditioned volume to the building, but not conditioned floor area.
3. Adding a loft within the existing conditioned volume of a residence. This is an alteration rather than an addition because it adds conditioned floor area, but not conditioned volume.
4. Installing a new central air conditioning and heating system.
5. Replacing an air conditioner or the exterior unit or indoor coil of a split system air conditioner.
6. Replacing of a furnace or water heater.

7. Replacing windows replacement where all the glazing in an existing fenestration opening is replaced with a new manufactured fenestration product.
8. Enlarging an existing window.
9. Adding a new window or door to an exterior wall.
10. Adding new hardwired lighting.
11. Reroofing in specific climate zones for low-sloped and steep-sloped roofing.

Repairs

§101(b), §151(b)1B Note

Repairs to low-rise residential buildings are not within the scope of these Standards. A repair is the reconstruction or renewal of any part of an existing building for the purpose of its maintenance. In this case, “part of a building” means a component, system or equipment, for which there are requirements in the Standards. In simple terms, when such a component, system, or equipment of an existing building breaks or is malfunctioning, and a maintenance person fixes it so it works properly again, that is a repair. If instead of fixing the break or malfunction, the component, system or equipment is replaced with a new or different one – it is considered an alteration and not a repair. Some examples of repairs are the following:

1. Replacing a broken pane of glass but not replacing the entire window.
2. Replacing a failed compressor in an air conditioner but not replacing the entire air conditioner.
3. Replacing a failed fan motor or gas valve in a furnace but not replacing the entire furnace.
4. Replacing a heating element in a water heater but not replacing the entire water heater.

Example 8-1

Question

A sunspace addition is designed with no mechanical heating or cooling and a glass sliding door separating it from all existing conditioned space. This design is approved by the enforcement agency as non habitable or unimproved space. Under what conditions will the Standards apply to this addition?

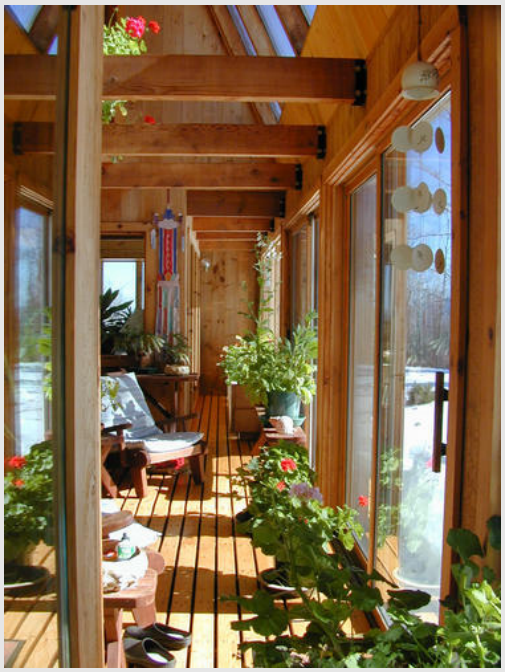

Unconditioned Sunspace

Answer

The mechanical and envelope requirements of the Standards do not apply if the space is not considered habitable or improved and therefore can be unconditioned; however, per §100(c)2, the sunspace must still comply with the applicable lighting requirements of §150(k). The sunspace is unconditioned if:

- The new space is not provided with heating or cooling (or supply ducts)
- All openings between the new space and the existing house can be closed off with weather-stripped doors and windows
- The addition is not indirectly conditioned space (defined in Reference Joint Appendix JA1)

A building official may require a sunspace to be conditioned if it appears to be habitable space, in which case the Standards apply.

Example 8-2

Question

An existing duplex is remodeled, which includes the installation of new faucets, and bathroom lighting. Do the Standards apply?

Answer

This is an alteration. Since no new conditioned space is being created, the remodel must comply with applicable measures described in §152(b).

Example 8-3

Question

An existing house is remodeled by adding additional floor area but not increasing the volume of the house. This was accomplished by adding a loft through an area in the house with a vaulted ceiling. As part of this new windows are replacing existing ones, and two new windows are being added. Several exterior walls are being opened up to install new wiring. What requirements will apply?

Answer

Since floor areas is being added but not conditioned volume, this is an alteration and not an addition. New and replacement windows must meet the maximum U-factor and SHGC requirements of Package D or E. The house must also comply with the mandatory measures for caulking/sealing around windows. Also, insulation must be installed in the exterior walls that are being altered (See Chapter 3). Alternatively, the performance approach may be used to demonstrate compliance for overall building, even if individual windows fail to meet the prescriptive requirements.

8.2 Compliance Approaches

§152

There are three general approaches for showing that residential additions comply with the Standards. The entire structure may be treated as new construction (“whole building”), but this is usually the most stringent approach. The second method is to treat the addition as its own structure (“addition alone”). The third method is to consider the addition along with the existing house (“existing + addition + alteration”). This third method provides the most flexibility but requires using the performance approach.

Table 8-1 compares these three approaches, and details are documented in the vendor’s Compliance Software User Manual.

For alterations there are two compliance options. The first option is the prescriptive method, which requires that all components being altered meet the Package D requirements (with a few exceptions as described later). The second compliance option for alterations is the performance method using the “existing + alteration” approach which follows the same rules as the existing + addition + alteration method described in Section 8.7.3.

Table 8-1 – Comparison of Compliance Methods for Additions

Approach	Prescriptive Method	Performance Method
Whole Building All building systems and components shall comply as if the entire structure is new construction.	This approach may be the easiest compliance method for major renovations and gut rehabilitation projects where the distinction between the existing house and the addition is muddled.	Provides most of the advantages of the performance approach for the addition alone and the existing-plus-addition-plus-alteration approach, but is likely to be more stringent.
Addition Alone The addition is treated as a separate structure.	All new components shall comply with the Package D prescriptive requirements. Glass area limits depend on the size of the addition and/or the amount of glass removed in order to install the addition for square footages up to 1000 ft². Area if glass is limited solely by the size of the addition if the square foot is equal to or greater than 1000 ft².	Some flexibility. Allows tradeoffs in efficiency measures within the addition, but not with existing house. Fenestration area can exceed prescriptive limits if the project complies with the energy budget. Internal gains are prorated by floor area. This method is not allowed when modifications are proposed to the existing water heating system, except if only one additional water heater is installed, and it meets the criteria described in §152(a)2A Exception 3. Otherwise, the Existing + Addition + Alteration approach is required.
Existing + Addition + Alteration The existing house is modeled in its present condition. Then the existing house is modeled with all proposed alterations, as well as the proposed addition.	Not applicable	Improvements in the existing house may be used to offset features in the addition that do not meet the prescriptive requirements. Altered features must meet or exceed the prescriptive requirements in order to obtain credit. This method is also used whenever an alteration is made to existing buildings, whether or not there is an addition to the building at the same time. Fenestration area can exceed prescriptive limits if the project complies with the energy budget.

8.3 Building Envelope

This section describes the mandatory and prescriptive requirements for the building envelope as they apply to additions and alterations. The performance method is discussed in a later section.

8.3.1 Mandatory Requirements

The mandatory measures apply to all added or altered envelope components just as they do to new construction, regardless of whether the prescriptive or performance compliance method is used. The following requirements may apply. See Chapter 3 for more details.

- Fenestration air leakage
- Fenestration U-factor and SHGC ratings
- Fenestration temporary and permanent labels

- Certification of insulating materials
- Restrictions on use of urea formaldehyde foam insulation
- Flame spread ratings
- Ceiling insulation mandatory measures
- Minimum wall insulation
- Minimum floor insulation
- Slab insulation moisture resistance and physical protection (when required by the prescriptive requirements)
- Mandatory slab insulation for heated slabs
- Sealing of joints and other openings
- Vapor barrier in climate zones 14 and 16
- Roofing Products (cool roofs)

Insulation

When insulation is installed in the attics of existing buildings, at least R-38 shall be installed in climate zones 1 and 16 and at least R-30 in the other climate zones. When ceilings without attics are altered, at least R-19 shall be installed between wood-framing members, or sufficient insulation to achieve the equivalent of R-19 insulation between wood framing members and the ceiling, See §150(a). To be considered “altered”, the space between framing members must become accessible as a part of a ceiling/roof modification. For example, if roofing material is being replaced, but the roof sheathing to which the roofing is nailed is not removed, then the insulation would not be required.

Existing structures that already have R-11 insulation installed in framed walls are exempt from the mandatory minimum R-13 wall insulation required by §150(c) if the building can show compliance using performance compliance and modeling R-11.

Roofing Products

All roofing products must meet the mandatory requirements of §10-113 and §118(i), and the prescriptive requirements of §152(b)1H. Roofing products with high solar reflectance and thermal emittance are referred to as “cool roof”, which refers to an outer layer or exterior surface of a roof. As the term implies, the temperature of a cool roof is lower on hot sunny days than for a conventional roof, reducing cooling loads and the energy required to provide air conditioning.

The benefit of a high reflectance is obvious: while dark surfaces absorb the sun’s energy (visible light, invisible infrared. and ultraviolet radiation) and become hot, light-colored surfaces reflect solar energy and stay cooler. However, high emittance is also important. Emittance refers to the ability of heat to escape from a surface once it is absorbed. Surfaces with low emittance (usually shiny metallic surfaces) contribute to the transmission of heat into the roof components under the roof surface. The heat can increase the building’s air conditioning load resulting in increased air conditioning load and less comfort for the occupants.

High-emitting roof surfaces give off absorbed heat relatively quickly through the path of least resistance - upward (and out of the building).

Rating and Labeling

Roofing products that are used for compliance with the standards (prescriptive and performance approaches) are require to be tested and labeled by the Cool Roof Rating Council (CRRC) per §10-113 and that liquid applied products meet minimum standards for performance and durability per §118(i)4. The CRRC is the supervisory entity responsible for certifying cool roof products. The CRRC test procedure is documented in CRRC-1, the CRRC Product Rating Program Manual. This test procedure includes tests for both solar reflectance and thermal emittance.

The roofing products manufacturer must have its roofing product tested for solar reflectance and thermal emittance, and be labeled according to CRRC procedures. Figure 8-1 provides an example of an approved CRRC product label.

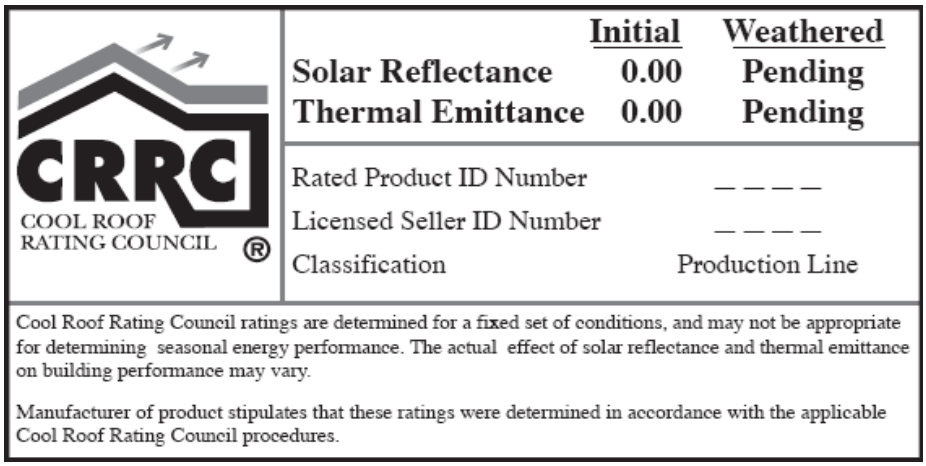

Figure 8-1-CRRC Product Label and Information

8.3.2 Prescriptive Requirements for Additions Alone

§152(a)

In general, the prescriptive requirements apply to additions in the same way they apply to entirely new buildings and must be documented on the new CF-1RForm. However, there are a few exceptions as noted below and summarized in Table 8-2. Mechanical ventilation requirements do not apply to additions that are less than 1,000 ft².

Use the CF-1R-ADD form to document existing, removed and proposed fenestration by orientation. The total net percentage of fenestration should be 20 percent or less including West facing fenestration. West facing area includes skylights tilted to the west or tilted in any direction when the pitch is less than 1:12 (9.5 degrees from the horizontal), and must not exceed 5 percent of the conditioned floor area (CFA) in climate zones 2, 4, and 7-15.

Plan checkers will verify the CF-1R-ADD form, total Percentage of Fenestration calculation against the Total Net Fenestration and the CFA to make sure that they

do not exceed the allowable limits for total fenestration area as well as west-facing fenestration area.

1. If the Total of Fenestration exceeds 20 percent of the conditioned floor area (CFA), performance compliance approach must be used. Likewise, if the total west-facing fenestration area in climate zones 2, 4, and 7-15, exceeds 5 percent of the CFA, then performance compliance approach must be used.
2. If the addition has a floor area of 100 ft² or less, then up to 50 ft² of fenestration area is allowed. Additions that add less than 50 ft² of fenestration area need to meet the Package D requirements for fenestration U-factor and SHGC, but are exempt from the fenestration maximum total area limits (this includes both 20 percent of conditioned floor limit and the 5 percent west-facing limit). There is no credit for glazing removed when using this option. For additions with floor areas of 100 ft² or less that have greater than 50 ft² of fenestration area, the performance compliance is optional, or use the less than 1,000 ft² column.
3. If the addition has a floor area equal to or less than 1,000 ft², then only R-13 wall insulation is required in all climate zones. All other requirements of Package D apply, as indicated in Table 8-2. CF-1R-ADD Form is used to determine credit for glazing removed.
4. If the addition has a floor area equal to or greater than 1,000 ft² the fenestration need to meet the Package D requirements for fenestration U-factor and SHGC. The allowed 20 percent CFA limit and of which a maximum 5 percent CFA is allowed as west-facing glazing (in climate zones 2, 4, and 7-15) applies.

Table 8-2 – Prescriptive Envelope Requirements for Additions

	Size of Addition		
Component	100 ft² or less	1,000 ft² or less	More than 1,000 ft²
Ceiling Insulation	R-19	Package D	Package D
Wall Insulation[1]	R-13	R-13	Package D
Floor Insulation	R-13	Package D	Package D
Fenestration U- factor[3]	Package D	Package D	Package D
Glazing Area	≤ 50 ft²	Package D (20%) + Glass Removed[4]	Package D
Solar Heat Gain Coefficient (SHGC)	Package D	Package D	Package D
Radiant Barrier[2]	N/A	Package D	Package D
Roofing Products	Package D	Package D	Package D

1. Heavy mass and light mass walls may meet the Package D requirements for mass wall insulation instead of R-13.

2. Radiant barrier requirements is not applicable for additions less than 100 ft². For additions greater than 100 ft² and in climate zones 2, 4, and 8-15 it is applicable to the roof area of the addition. It is not necessary to retrofit a radiant barrier in the existing attic. N/A (not allowed) means that feature is not allowed in a particular climate zone.

3. Dual-glazed greenhouse windows are assumed to meet the applicable U-factor requirement.

4. No more than 5% of the CFA is allowed for west facing regardless of glass area removed to make way for the addition. The balance of removed glass area can be added to the rest of the orientations plus the maximum allowed 20% of the CFA.

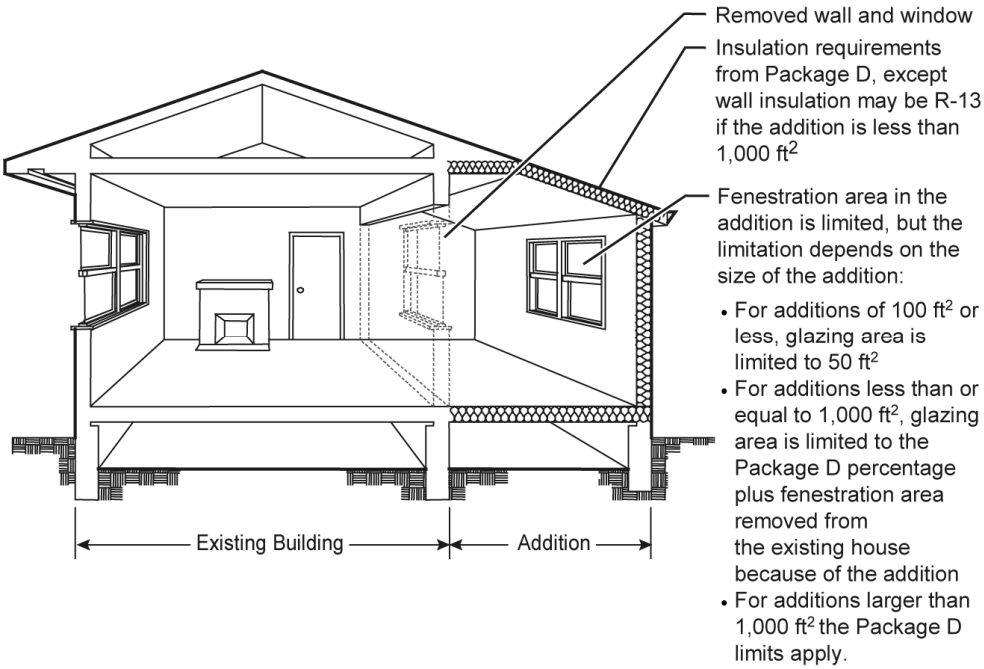

Figure 8-2 – Addition Alone Prescriptive Compliance Approach

Greenhouse Windows

Greenhouse windows are special windows that project from the façade of the building. In addition to the projected area, greenhouse windows typically have two sides, a top and a bottom surface from which heat is exchanged. The NFRC-rated U-factor for greenhouse windows is typically quite high and does not meet the prescriptive requirements for fenestration products.

When greenhouse windows are used in additions or alterations, they are deemed to comply with the prescriptive U-factor requirement when they are dual-glazed, and the prescriptive SHGC limit still applies. This applies only for greenhouse windows used in additions or alterations, not in newly constructed buildings. Greenhouse windows must either meet the SHGC requirements with an NFRC rating, or, if they are being installed with other fenestration products, they may use the default SHGC values from Standards Table 116-B and weight average the SHGC values as described in §151(f)4A.

Greenhouse windows add volume, but not floor area to the building and are therefore alterations, not additions, if this is the only change.

Skylights

Skylights must still comply with the prescriptive U-factor and SHGC maximum values limit in Package - D. The SHGC for skylights may be determined either by using an NFRC rating, a default value from Standards Table 116-B, or by calculating the SHGC using a manufacturer's center of glass $SHGC_c$ to determine $SHGC_{fen}$ with the following equation:

$SHGC_t = 0.08 + 0.86 \times SHGC_c$

8.3.3 Prescriptive Requirements for Alterations

§152(b)1A and §152(b)1B

Fenestration

When over 50 ft² of fenestration area is added to an existing building, then the fenestration must meet the requirements of Package D for U-factor, fenestration area, and SHGC. The area requirement means that the total fenestration area for the whole building, including the added fenestration, must not exceed 20 percent of the conditioned floor area, and in climate zones 2, 4, and 7-15, the 5 percent west-facing area limit must be complied with. Use the worksheet form WS-4R to document existing, removed and proposed fenestration by orientation. Plan checkers will verify the WS-4R Total Percentage of Fenestration calculation against the Total Net Fenestration and the CFA to make sure that they do not exceed the allowable limits for total fenestration.

If the Total Percentage of Fenestration exceeds 20 percent, performance compliance approach must be used. Alterations that less than 50 ft² of fenestration area (Exception to §152(b)1A) need to meet the Package D requirements for fenestration U-factor and SHGC, but are exempt from the fenestration maximum 20 percent total area and the 5 percent west-facing areas' limits.

If in an existing building the west-facing fenestration area already exceeds the 5 percent limit and during the alteration more glass is added to non-west facing orientations, so long as the total fenestration area does not exceed the 20 percent of the CFA limit, the building is in compliance with the total and west-facing areas limits. However, if the addition of new glass results in total fenestration exceeding the 20 percent of the CFA limit, then the performance approach must be used to demonstrate compliance with the Standards. Also, if in this scenario, new glass is added to the west-facing orientation, the performance approach must also be used to demonstrate compliance.

An important requirement is that when a fenestration product is replaced with a new manufactured fenestration product in the same orientation and tilt, the new unit must also meet the U-factor and SHGC requirements of Package D, even if the fenestration area does not increase. This requirement applies when all the glazing in an existing fenestration opening is replaced with a new manufactured fenestration product. The requirement applies even if only a single window is being replaced. It does not apply to repairs when only a portion of the glazing within a single opening is replaced. It also does not apply if the existing window is replaced with a field-fabricated window (defined in Chapter 3).

As noted earlier, greenhouse windows added during an alteration are deemed to comply with the prescriptive U-factor requirements as long as they are dual-glazed. The Package D SHGC requirement must still be met. See

Example 8-7 below for details.

Example 8-4

Question

A small addition of 75 ft² is being planned – an existing porch is being covered off a master bedroom. The existing heating and air conditioning system will serve the new conditioned space. The contractor wants to follow the prescriptive requirements. What requirements apply? The house is located in climate zone 7.

Answer

Since the addition is smaller than 100 ft², the fenestration area is limited to a maximum of 50 ft². The fenestration must meet the U-factor and SHGC requirements of Package D. For climate zone 7, these fenestration requirements are a maximum U-factor of 0.40 and a maximum SHGC of 0.40. For an addition of this size, insulation only must meet the mandatory requirements of R-19 ceiling insulation; R-13 wall insulation and R-13 floor insulation.

Since the existing heating and cooling equipment is being used for the addition, that equipment does not have to meet the mandatory equipment efficiency requirements. Mandatory duct insulation requirements of §150(m) apply (R-4.2 minimum in unconditioned space). All other mandatory requirements in §150 must be met. Note that this addition could comply with the requirements of §152(a)1B, instead. For some additions this could allow more glazing area, but additional Package D measures would apply.

Example 8-5

Question

A kitchen is being expanded by 150 ft². As part of the addition a sliding glass door (42 ft²) is being removed. If using prescriptive compliance how much fenestration area is allowed for this addition? If the sliding glass door is west-facing, how much west-facing glazing will be allowed in the addition?

Answer

Since this addition is no larger than 1,000 ft², the Standard permits the area of fenestration removed during the remodel to be added to the Package D fenestration area allowance (20 percent of floor area). In this case, the Package D allowance is 30 ft². Therefore, the total allowance for this addition is 72 ft² of fenestration area. If the addition were larger than 1,000 ft², the area of the fenestration removed could not be added to the 20 percent Package D fenestration area allowance.

Also, in climate zones 2, 4, 7-15, the total allowed west-facing fenestration is 5 percent of the CFA of the addition plus the amount of west-facing glazing removed from the existing building as a result of the construction of the addition. So, the amount of west-facing glazing is 5 percent of 150 ft² (7.5 ft²), plus 42ft² or 49.5 ft².

Example 8-6

Question

If I remove a window from the existing house while doing an addition, and re-use this window in the addition, does the relocated window have to meet the prescriptive requirements of Package D?

Answer

Yes, if using prescriptive compliance, the relocated window must meet the U-factor and SHGC requirements of Package D. If you use this existing window in the addition, you must use the actual or default U-factor and SHGC of this window in showing compliance. Therefore, meeting the prescriptive requirements may not be possible, and performance compliance may be the only option. Window certification and labeling requirements of §116(a) do not apply to used windows.

Example 8-7

Question

For additions and alterations that include a greenhouse window (also known as garden window), what are the U factor and SHGC requirements? What is the area used for calculations for greenhouse windows?

Answer

For greenhouse windows in additions and alterations, you can assume that double-glazed greenhouse windows have the U-factor required to comply with the prescriptive standards and that this U-factor can also be used to determine compliance with performance approaches. Alternatively, the NFRC rated U-factor may be used, if available, to meet the U-factor required in the prescriptive package. However, for greenhouse windows the SHGC must meet the requirements shown in the prescriptive Package D or the SHGC used to show compliance in the performance approach. To meet the SHGC for greenhouse windows the proposed fenestration may use the NFRC rated SHGC or the default SHGC from Standards Table 116-B if the area weight averaged SHGC of the greenhouse window plus other fenestration in the proposed design meets the values used for compliance.

For skylights, actual U-factors from NFRC rated labels or defaults from Standards Table 116-A may be used for compliance. Exception to §151(f)3A, exempts up to two square foot of tubular skylights from the U-factor requirements, provided that the ceiling diffusers are dual-paned; additional skylights must meet the U-factor requirements. Skylights may use one of three methods for determining the proposed SHGC; NFRC rated SHGC, default SHGC from Standards Table 116-B, or an $SHGC_{fen}$ calculated from the manufacturer's center of glass SHGC ($SHGC_c$) using the following equation:

$SHGC_{fen} = 0.08 + 0.86 \times SHGC_c$

Note, that for greenhouse windows in new construction that is not associated with an existing building, the actual U-factor of fenestration products must be used for compliance documentation/calculations. For greenhouse windows, the window area is the rough opening.

Example 8-8

Question

If I am doing an alteration to move an existing window to another location, does it need to meet the prescriptive requirements?

Answer

Once you move the window to a location where a window did not previously exist, it must meet the prescriptive requirements, because it is considered an altered component rather than a window repair.

Example 8-9

Question

An existing building has all single-pane windows. All of the windows will be replaced, and one wall will be altered to have French doors in place of an existing window. What requirements apply?

Answer

For prescriptive compliance, the Package D prescriptive requirements apply to all new windows. All of the installed fenestration must also meet applicable mandatory measures.

Note that in performance approach, to receive a compliance credit, all fenestration products must also meet or exceed the Package D requirements. There will be a penalty if the new windows fall short of Package D U-factors and SHGC levels.

Example 8-10

Question

An existing building has all single-pane, metal-frame windows. A proposed remodel will replace all the windows; no other work is being done as part of the remodel. What applies?

Answer

The Package D prescriptive requirements apply to all new windows. All of the installed fenestration must also meet applicable mandatory measures.

Note that in performance approach, to receive a compliance credit, all fenestration products must also meet or exceed the Package D requirements. There will be a penalty if the new windows fall short of Package D U-factors and SHGC levels.

Example 8-11

Question

An existing building has all single-pane, wood-frame windows. Two double-pane, metal-frame greenhouse windows will be added as part of a remodel. How should the greenhouse windows be treated?

Answer

Since greenhouse windows add conditioned volume, but do not add conditioned floor area, this remodel is considered an alteration rather than an addition. For the purposes of alterations, any dual-glazed greenhouse windows installed as part of an alteration may be treated as though they comply with the U-factor requirements applicable to prescriptive alterations. However, the Package D SHGC requirement applies to these greenhouse windows. All applicable mandatory measures must be met.

If the added window area (the rough opening area for greenhouse windows) is no greater than 50 ft^2 then no fenestration area limits apply. However, if more than 50ft^2 of fenestration is added, then the Package D limit of 20 percent of floor area and the 5 percent west-facing area limits must not be exceeded for the whole building. Otherwise, the performance method must be used.

Roofing Products

Alterations to existing roofs needs to meet §152(b)1H which requires that when more than 50 percent of the roof or more than 1,000 ft^2 of exterior existing roof, whichever is less, is replaced, the criteria set forth below must be met.

It should be noted that the requirements for the solar reflectance of roofing products are no longer based on initial values, but rather on 3-year aged values. If the 3-year aged value for the reflectance is not available in the CRRC's Rated Product Directory, then the equation below can be used until the aged rated value for the reflectance is posted in the directory.

$$\text{Aged Reflectance}_{calculated}=(0.2+0.7\ [\rho_{initial} - 0.2])$$

Where $\rho_{initial}$ = Initial Reflectance listed in the CRRC Rated Product Directory.

Refer to Section 3.1.3 under the building envelope requirements in the residential manual for a full description and a better understanding of roofing products, solar reflectance, thermal emittance and SRI.

Steep-Sloped Roofs – In existing buildings, steep-sloped roofs must meet the following requirements:

i. For steep-sloped roofs, roofing products with a density of less than 5 lb/ft² in climate zones 10 through 15 shall have a minimum aged solar reflectance of 0.20 and a minimum thermal emittance of 0.75, or a minimum SRI of 16.

ii. For steep-sloped roofs, roofing products with a density of 5 lb/ft² or more in climate zones 1 through 16 shall have a minimum aged solar reflectance of 0.15 and a minimum thermal emittance of 0.75, or a minimum SRI of 10.

Roofing products with less than 5 lb/ft² generally include asphalt shingles and metal roofs. Products with a density more than 5 lb/ft² generally include concrete, clay tiles, slate and possibly some synthetic roof coverings.

When any of the options in items a through h below are used, they are considered equivalent to the reflectance, emittance, and the SRI requirements described in items i and ii above:

a. Insulation with a thermal resistance of at least 0.85 hr•ft²•°F/Btu or at least a 3/4 inch air-space is added to the roof deck over an attic; or

b. Existing ducts in the attic are insulated and sealed according to §151(f)10; or

c. In climate zones 10, 12 and 13, with 1 ft² of free ventilation area of attic ventilation for every 150 ft² of attic floor area, and where at least 30 percent of the free ventilation area is within two feet vertical distance of the roof ridge; or

d. Buildings with at least R-30 ceiling insulation; or

e. Buildings with a radiant barrier in the attic meeting the requirements of §151(f)2; or

f. Buildings that have no ducts in the attic; or

g. In climate zones 10, 11, 13 and 14, R-3 or greater roof deck insulation above vented attic.

h. Roof areas covered by building integrated photovoltaic panels and building integrated solar thermal panels and existing roof areas that have thermal mass over the roof membrane with a weight of at least 25 lb/ft² are exempted for this requirement as per Exceptions 1 and 2 to §151(f)12.

Example 8-12

Question

Why is there a different requirement in the different climate zones for the aged solar reflectance and SRI requirements between roofing products with density less than 5 lb/ft² versus roofing products and density of 5 lb/ft² or more?

Answer

Roofing products with less density perform differently compared to the higher density materials which have a tendency to retain some gained heat. For this reason the performance characteristics of the two different densities were evaluated separately for each climate zone.

Low-Sloped Roofs – In existing buildings, low-sloped roofs must meet the following requirements:

Low-sloped roofs in climate zones 13 and 15 shall have a 3-year aged solar reflectance equal to or greater than 0.55 and a thermal emittance equal to or greater than 0.75, or a minimum SRI of 64.

There are three exceptions:

1. Buildings that have no ducts in the attic are exempt from this requirement;
2. Roof areas covered by building integrated photovoltaic panels and building integrated solar thermal panels are exempted for this requirement as per Exception 1 to §151(f)12.
3. Roof constructions that have thermal mass over the roof membrane with a weight of at least 25 lb/ft² are exempt from the minimum requirements for solar reflectance and thermal emittance or SRI under Exception 2 to §151(f)12.

Example 8-13

Question

Why is the low-slope roofing product requirement is only listed for Climate Zones 13 and 15?

Answer

Essentially these two climate zones are the only climate zones which showed cost savings for having a low-slope roofing product requirement.

Example 8-14

Question

Why are there so many exceptions to the addition and alterations section that can be considered equivalents to Roofing Products?

Answer

There are many things that can have differing impacts on the requirements. There are older vintage structures that often had ducts under the houses rather than in the attics and newer houses may have materials just slight below current requirements or equal to one of the "considered equivalent" items.

Often changing one performance item in a system can have an impact, thereby negating the positive benefit of another. Ultimately, in the warm months the main concern is heat gain in the attic affecting either ducts or by conduction heating the occupied area ceilings. For example, if the ducts are insulated to current requirements and air leakage controlled to meet current requirements, the energy savings would be expected to at least equal the benefit of the reflective roof coverings.

Example 8-15

Question

What happens if I have a low-slope roof on most of the house but steep-sloped roof on another portion, do I have to meet the two different criteria for the roofing products?

Answer

Yes, however, if your house is in climate zones 13 or 15, you will not need to meet the low-slope criteria for the areas with low-slope, but the areas with steep-slope roof you will need to meet roofing product criteria.

Example 8-16

Question

I am replacing my existing wood shack roof with asphalt shingles. Would this be considered a repair?

Answer

No, a repair is defined as a reconstruction or renewal for the purpose of maintenance of any component, system or equipment of an existing building. A replacement of any component (i.e. roof top), system, or equipment for which there are requirements in the Standards is considered an alteration and not a repair.

Example 8-17

Question

Where do radiant barriers need to be installed when using the prescriptive Package D or meeting the performance standards where no credit is taken for retrofitting a radiant barrier in the existing house?

Answer

The radiant barrier only needs to be installed on the underside of the roof assembly and gable ends associated with the addition. This is the same as entirely new buildings.

Example 8-18

Question

I am considering doing a reroof on my home. When will I be required to put on a cool roof?

Answer

Cool roof requirements are triggered when either more than 50 percent of the roof area or more than 1,000 ft^2, whichever is less is replaced. If one of the exceptions below applies, then cool roof requirements are not triggered:

1. Buildings with no ducts in the attic; or
2. If the building with a radiant barrier in the attic meeting the requirements of § 152(f)2 ; or
3. Buildings with at least R-30 ceiling insulation; or
4. If in climate Zones 10, 11, 13, and 14, R-3 or greater roof deck insulation above vented attic; or

5. If existing ducts in the attic are insulated and sealed according to § 151(f)10 ; or

6. Insulation with a thermal resistance of at least 0.85hr.ft².°F/Btu or at least ¾ inch air-space is added to the rook deck over an attic; or

7. In climate zones, 10, 12, and 13, with 1ft² of free ventilation area of attic ventilation for every 150 ft² of attic floor area, and where at least 30 percent of the free ventilation area is within 2 feet vertical distance of the roof ridge; or

8. If the building can show compliance using performance approach.

Example 8-19

Question

I am building a 450 ft² addition on my house; do I have to meet cool roof requirements in the prescriptive package?

Answer

Yes, if using prescriptive compliance the roof must meet the cool roof requirements of Package D for the type of roof slope and density. To avoid the cool roof requirements requirement you can use the performance approach and tradeoff against other energy efficiency features of the addition alone or the existing building use the existing + addition + alteration approach.

8.4 HVAC

The Standards apply to alterations of the heating and cooling system whether or not the alterations correspond to an addition to the building. This section describes the conditions where compliance is necessary and describes the corresponding requirements.

If the heating and cooling system is left unchanged as part of an addition or alteration, then compliance with the Standards is not necessary. Extension of an existing heating and cooling system, such as extension of a duct is not considered a change to the existing heating and cooling system therefore the existing heating and cooling system components are unchanged and do not need to meet the Standards requirements. However, the extensions of the duct systems must meet mandatory and prescriptive requirements that are described in the following Sections.

8.4.1 Mandatory Requirements

§152(b)1

§152(b)2

Any altered components of the heating and cooling system must meet the same mandatory requirements that apply to new construction. These mandatory requirements include the following as appropriate:

1. Equipment efficiency (enforced at time of sale)
2. Heat pump controls
3. Heating and cooling load calculations
4. Standby losses and pilot lights

5. Pipe insulation and refrigerant line insulation
6. Minimum duct insulation
7. Duct connections and closures
8. Product markings for flexible ducts
9. Dampers to prevent air leakage
10. Protection of insulation
11. Setback thermostat (in most cases)
12. Fireplaces, decorative gas appliances, and gas logs (infiltration and pilot light related requirements). See Chapter 4 for more details.

8.4.2 Prescriptive Requirements

The prescriptive requirements for HVAC alterations are described in this section. The performance method, as described later in this chapter, is an alternative to these prescriptive requirements.

The Standards make a distinction between two types of HVAC "changeout" situations: *new or replacement space conditioning systems,* and *altered space conditioning systems.* The differences in the requirements for these two types of HVAC changeout situations are discussed in the paragraphs below

New or Replacement Space-Conditioning Systems

§152(b)1C

When a *new or replacement space-conditioning system* is installed, the system must meet the all applicable mandatory measures as well as the prescriptive requirements found in §151(f)6, §151(f)7, §151(f)9, and §151(f)11. These prescriptive sections describe the heating system type, airflow and fan watt draw, refrigerant charge measurement and thermostat requirements. When a dwelling is altered to install a *new or replacement space-conditioning system*, §151(f)7 requires that split system air conditioners and heat pumps must meet the refrigerant charge verification requirements, and also the prescriptive cooling coil airflow and fan watt draw requirements. For additional information refer to the Airflow and Fan Watt Draw, and Refrigerant Charge measurement topics below in this section.

A new or replacement space conditioning system installed in an existing dwelling includes:

1. all of the system heating/cooling equipment (e.g. outdoor condensing unit and indoor cooling or heating coil for split systems; or complete replacement of a package unit), and
2. entirely new or replacement duct system, and
3. entirely new or replacement air handler.

A discussion of the characteristics of an *entirely new or replacement duct system* can be found below under the topic Duct Sealing and Insulation. For systems that are altered to repair or replace smaller portions, or separate components of

existing space conditioning systems, refer to the topic *Altered Space conditioning Systems* that follows.

Altered Space-Conditioning Systems

§152(b)1E §152(b)1F

When a space-conditioning system is altered by the installation of or replacement of the air handler, outdoor condensing unit of a split system air conditioner or heat pump, cooling or heating coil, or the furnace heat exchanger, §152(b)1E requires the ducts to be sealed, and §152(b)1F requires that the system must have a setback thermostat and the system must also meet the refrigerant charge verification requirements specified in Reference Residential Appendix RA3 that requires installation of Temperature Measurement Access Holes (TMAH), and requires a minimum cooling coil airflow of 300 cfm/ton of nominal cooling capacity. This airflow requirement is less stringent than the prescriptive 350 cfm/ton of nominal cooling capacity required for split system air conditioners and heat pumps in the *new or replacement space conditioning systems* category described above. Refer to the sections on duct sealing, and refrigerant charge measurement below for additional information about these requirements.

Duct Sealing and Insulation

§152(b)1D, §152(b)1E, and §152(b)1F

Existing duct systems must be sealed and verified by a HERS rater when portions of the heating and cooling system are altered. The requirement applies in climate zones 2, 9, 10, 11, 12, 13, 14, 15, and 16.

The ducts must be sealed (as described below) under *any* of the following circumstances:

1. An air handler is installed or replaced.
2. An outdoor condensing unit of a split system air conditioner or heat pump is installed or replaced.
3. A cooling or heating coil is installed or replaced.
4. A furnace heat exchanger is installed or replaced.

When more than 40 ft of new or replacement ducts are installed in unconditioned space, in addition to the duct sealing requirements in applicable climate zones described above, the added or replaced ducts must also meet the air distribution requirements of §150(m) and the duct insulation requirements of Package D, §151(f)10. Note that the air distribution and duct insulation requirements must be complied with in all climate zones; however, these requirements apply to only new or replaced ducts, the existing and unaltered ducts do no need to comply with these requirements.

If 40 ft or less of new or replacement ducts are installed, the duct sealing requirements described above do not apply; however, the ducts must still meet the air distribution and duct insulation requirements of §150(m) and §151(f)10.

The requirements apply to the duct system that is affected by any one of the alterations listed above. If a residence has more than one duct system, only the ducts connected to the altered equipment need to be sealed and verified.

In climate zones 2, and 9 through 16, for *entirely new or replacement duct systems* in existing residences, the leakage requirement is the same as described in Chapter 4 for new air distribution systems.

An ***entirely new or replacement duct system*** can also include existing parts of the original duct system (e.g., register boots, air handler, coil, plenums, etc.) if those parts are *accessible* and they can be sealed (refer to the following section on *Accessibility*). Thus, if the system is substantially new, and includes the furnace cabinet (air handler) and other existing parts of the original system that are all *accessible*, an attempt should be made to seal the duct system to meet the 6 percent (of nominal system central fan airflow) leakage rate criteria. If the 6 percent leakage rate criteria cannot be met, a smoke test should be performed to verify that the excess leakage is coming only from the furnace cabinet (air handler cabinet), and not from other *accessible* portions of the duct system. Note that the protocol for Smoke Test of Accessible-duct Sealing given in Reference Residential Appendix RA3.1.4.3.7 makes an exception for the furnace cabinet (air handler cabinet).

In climate zones 2, and 9 through 16, for existing duct systems or when new ducts are being added as an extension of an existing duct system, the sealing requirements are different.

There are four options for showing compliance for existing duct systems listed below. The rater or installing contractor must at least attempt compliance with the first option (15 percent leakage); then any of the other options can be utilized:

1. Total leakage is less than 15 percent of nominal system fan airflow.
2. Leakage to the outside is less than 10 percent of system fan airflow.
3. Leakage is reduced by more than 60 percent compared to before the alteration and a smoke test shows that all *accessible* leaks have been sealed.
4. If the first option (15 percent) leakage target cannot be met, then compliance can be achieved by sealing all *accessible* leaks verified by a HERS rater inspection. Sampling is not allowed.

When existing duct systems are constructed, insulated, or sealed with asbestos, any new extended ducts are exempt from the duct leakage and sealing requirements.

HERS field verification is required for all options listed above. For options 1, 2, and 3, verification can be accomplished through sampling as described in *Sampling for Additions or Alterations* below. For option 4, sampling is not allowed; a certified HERS rater must do the visual inspection and the smoke test on every house that chooses option 4.

Since test equipment must be set up for the first three options, it may be most efficient to test and record the results for the existing system and then attempt to meet each option sequentially until compliance is achieved.

There are a few cases where duct sealing and duct leakage verification are not required. These exceptions include the following:

1. Ducts that have already been sealed, tested, and certified by a HERS rater.

2. Duct systems with less than 40 lf of duct in unconditioned spaces.
3. Duct systems that are insulated or sealed with asbestos.

Accessibility

§152(b)1Diic, §152(b)1Diid §152(b)1Eiii, and §152(b)1Eiv require a smoke test to demonstrate that all *accessible* leaks have been sealed.

Accessible is defined as having access thereto, but which first may require removal or opening of access panels, doors, or similar obstructions. For example, if walls or drywall sections have to be moved or removed, or if the ducts are buried under insulation, or if a joint in the duct system is in too small a space between framing members for someone to be able to access the joint to seal it, then that portion of the duct system is not *accessible* and is not required to be sealed even if smoke testing determines that the duct leaks in that inaccessible location. All other portions of the duct system for which a smoke test identifies the presence of leakage must be sealed in order to comply. The exemption for inaccessible portions of the duct system is applicable only if the other criteria for duct leakage compliance cannot be met, thus only if the standards require a smoke test for compliance.

The installing contractor may perform a smoke test to locate and seal *accessible* leaks, or assess whether or not the duct leaks are *accessible*. However, compliance by smoke test and sealing all *accessible* leaks must be determined by a smoke test that has been conducted by a HERS rater.

Refrigerant Charge Measurement

§152(b)1C, §152(b)1F, and §151(f)7

In climate zones 2, and 8-15, when new or replacement or altered split system air conditioners or heat pumps are installed in existing buildings, correct refrigerant charge must be measured by the installer and verified by a HERS rater. The refrigerant charge verification requirement applies when a *completely new or replacement* split system *space-conditioning system* is installed, and also when components of an existing split system space-conditioning system, such as the air handler, outdoor condensing unit or the indoor cooling or heating coil, or the furnace heat exchanger are replaced (*altered space conditioning systems*). The cooling coil airflow requirement for *altered space conditioning systems* is 300 cfm/ nominal ton of cooling capacity which is the minimum airflow required for a valid refrigerant charge verification. This airflow requirement is less stringent than the prescriptive 350 cfm/ton required for split system air conditioners and heat pumps in the *new or replacement space conditioning systems* category for which the prescriptive airflow and fan watt draw requirements apply.

Compliance with the refrigerant charge verification requirement by the HERS rater can be accomplished through use of group sampling as described in *Sampling for Additions or Alterations* below.

New or replacement space-conditioning systems must meet §151(f)7A which specifies that when refrigerant charge is required by Standards Tables 151-B, 151-C, or 151-D, ducted split system central air conditioners and heat pumps must also be equipped with either: i) temperature measurement access holes

(TMAH) and saturation temperature measurement sensors (STMS) that must be HERS verified; or ii) be equipped with a Charge Indicator Display (CID) that will notify the occupant in case of improper refrigerant charge. The CID display must be constantly visible to the building occupant. The installed CID must also be HERS verified. Installation of STMS is a prescriptive requirement only. Note: For performance compliance, installation of the STMS is (optional) an alternative to use of refrigerant pressure gauges for determining the saturation temperature in the coils(s).

Temperature Measurement Access Holes (TMAH), Saturation Temperature Measurement Sensors (STMS), and the Charge Indicator Display (CID) provide a non-intrusive means for HERS raters and field technicians to verify the refrigerant charge, by eliminating the need to install refrigerant pressure gauges on the suction and the discharge lines, and providing pre-drilled holes in the supply and return plenum where the airflow temperature sensors must be inserted by the technician/rater during the verification procedure. The TMAH feature consists of two 5/16 inch (8 mm) drilled holes; one hole upstream from the cooling coil in the return plenum, and one hole downstream from the cooling coil in the supply plenum. The STMS feature consists of two permanently installed sensors, one mounted on the (indoor) cooling coil and one mounted on the (outdoor) condensing coil. These sensors must be equipped with industry standard mini plugs to allow field technicians and HERS raters to determine the saturation temperature of the refrigerant in the coils by attaching a digital thermometer device to the permanently installed STMS mini plug and reading the saturation temperature using the digital thermometer. The test procedures that utilize the STMS, and the installation specifications for TMAH are described in Reference Residential Appendix RA3.2.

The purpose of the CID is to provide real-time information about the status of the air conditioning system refrigerant charge to the building occupant. The CID must meet the specifications of Reference Joint Appendix JA6 and must be installed by the air conditioning equipment manufacturer, or field installed in accordance with manufacturer specifications.

TMAH, STMS and CID may be factory installed by the equipment manufacturers or field installed by the installers.

The requirements for refrigerant charge measurement, TMAH, STMS and CID are described in more detail in Chapter 4. The affected climate zones are 2 and 8 through 15.

Note that the TXV alternative to meeting the refrigerant charge verification requirement is no longer available under the 2008 Standards.

Airflow and Fan Watt Draw

In climate zones 10-15 when a *new or replacement space-conditioning system* is installed, the central forced air fan of split system air conditioners and heat pumps must simultaneously, in every zonal control mode, demonstrate an airflow of greater than 350 CFM/ton of nominal cooling, and a fan watt draw of less than 0.58 W/CFM in accordance with the procedures in Reference Residential Appendix RA3.3. In addition, the system installer must provide in the supply plenum, a **hole for the placement of a static pressure probe (HSPP**) or a **permanently installed static pressure probe (PSPP)**, downstream of the

evaporator coil that meets the specifications of Reference Residential Appendix RA3.3.1. (HSPP) or (PSPP) in the supply plenum provides an accurate and non-intrusive means for measuring airflow. Accurate airflow measurements are necessary in order to verify the prescriptive requirement has been met for cooling coil airflow compliance, to verify cooling coil airflow that exceeds the prescriptive requirement, and for refrigerant charge verification procedures. Note that the temperature split method for determining cooling coil airflow is allowed to be used only for verification of the minim airflow requirement for refrigerant charge verification procedure, and is not allowed for use in determining compliance with the prescriptive or performance cooling coil airflow and fan watt draw measures.

There are three acceptable methods allowed for use in determining compliance with the cooling coil airflow and fan watt draw measures as described in Reference Residential Appendix RA3.3:

1. use of a flow capture hood to measure the total airflow through the return grill(s), or
2. a flow grid device at the return grill(s) or other location where all the central fan airflow passes through the flow grid, or
3. using a fan flow meter device to perform the plenum pressure matching procedure.

The flow grid measurement device, and the fan flow meter measurement device both require access to static pressure measurements of the airflow exiting the cooling coil (supply plenum), which utilizes the HSPP or PSPP mentioned above.

Heating-only space-conditioning systems are not required to meet the prescriptive cooling coil airflow and fan watt draw requirements.

Sampling for Alterations

When compliance for an alteration requires field verification and diagnostic testing, the building owners or their agents may choose for the testing and field verification to be completed for the dwelling unit alone or as part of a closed sample group of dwelling units for which the same installing company has completed work that requires testing and field verification for compliance. The building owner or agent of the building owner (which may be the contractor) must complete the applicable portions of a Certificate of Compliance (CF-1R). The building owner or agent of the building owner must make arrangements for submittal of the CF-1R information to a HERS provider, identifying the building features and measures that require HERS verification. Also, arrangements must be made for the submittal of a completed, signed copy of the CF-1R to the HERS rater.

If registration of the compliance documentation is required, the procedures for registration of compliance documentation must be followed as described in Chapter 2 of this Residential Compliance Manual, and in Reference Residential Appendix RA2.

The sample group shall be no larger than seven. The installing company may request a smaller group for sampling. Whenever the HERS rater for the group is changed, a new group will be established. Field verification and diagnostic testing shall be completed by the HERS rater for one randomly selected dwelling unit in

each group. Re-sampling, full testing and corrective action shall be completed if necessary, as specified by the Reference Residential Appendix RA2.6.3.

Third Party Quality Control Program

An approved Third Party Quality Control Program may serve some of the functions of HERS raters for field verification and diagnostic testing purposes but does not have authority to sign the Certificate of Field Verification and Diagnostic Testing (CF-4R) as a HERS rater, as specified in Reference Residential Appendix RA2.7. The group for sampling purposes shall be a closed sample group no larger than thirty when a Third Party Quality Control Program (TPQCP) is used. The HERS provider shall arrange for the services of a HERS rater to conduct independent field verification of the installation work performed by the participating installing contractor and Third Party Quality Control Program. The HERS rater shall complete all of the responsibilities of a HERS rater as specified in Reference Residential Appendix RA2, with the exception that sampling procedures utilized shall be limited to sampling of a “closed” group as described in RA2.6.2. However, the sample tested shall be selected and field verified from within a group of up to thirty dwelling units (or thirty HVAC systems). The HERS rater shall be an independent entity from the Third Party Quality Control Program. Re-sampling, full testing and corrective action shall be completed as specified in RA2.6.3 with the exception that re-sampling shall be completed for a minimum of one out of every thirty dwelling units (or thirty HVAC systems) from the group. The Third Party Quality Control Program shall not impose restrictions on the HERS rater or the HERS provider that limit their independence, or the ability of the HERS rater or the HERS provider to properly perform their functions. For example, the Third Party Quality Control Program shall not impose restrictions on the HERS rater’s use of equipment beyond those required by the Commission.

When a Third Party Quality Control Program is used, the CF-6R (submitted by the contractor) shall document that data checking by a TPQCP has indicated that the dwelling unit complies. When a Third Party Quality Control Program is used, the building official may approve compliance based on the CF-6R on the condition that if HERS compliance verification procedures determine that re-sampling, full testing, or corrective action is necessary, such work shall be completed.

If field verification and diagnostic testing determines that the requirements for compliance are met, the HERS rater shall transmit the test results to the HERS provider data registry, whereupon the provider shall make available a registered copy of the Certificate of Field Verification and Diagnostic Testing, to the HERS rater, the builder, the enforcement agency, and other authorized users of the HERS provider data registry.

Printed copies, electronic or scanned copies, and photocopies of the completed, signed registered Certificate of Field Verification and Diagnostic Testing shall be allowed for document submittals, subject to verification that the information contained on the copy conforms to the registered document information currently on file in the provider data registry for the dwelling.

When a Third Party Quality Control Program is used, the HERS rater must still submit completed, signed, registered copies of the CF-4R to the enforcement agency, the installing contractor, and the builder or building owner for all dwellings (or HVAC systems) that must demonstrate compliance.

Approval of HVAC Installations utilizing Third Party Quality Control Programs (TPQCP) with group sampling for HERS verification

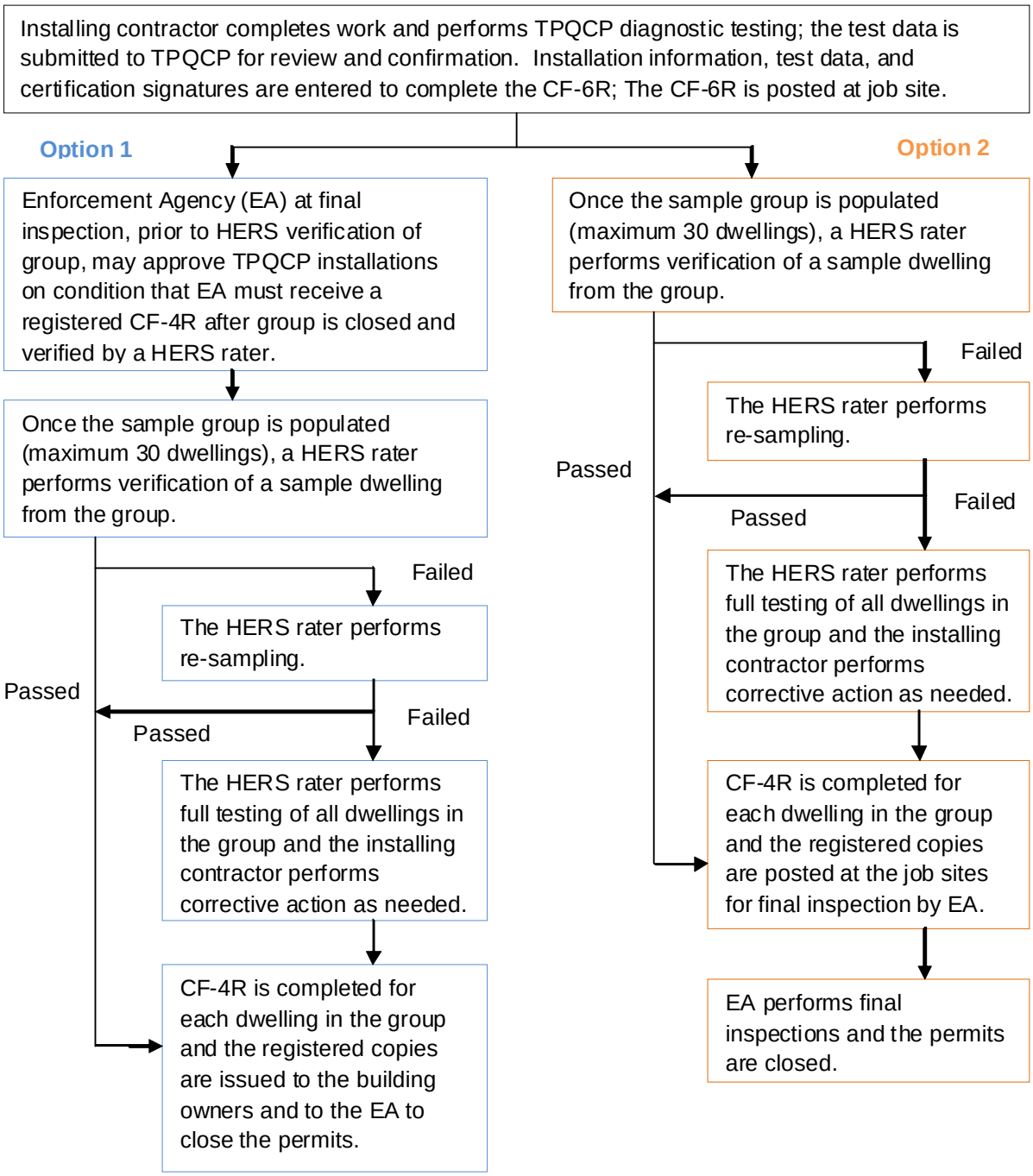

Setback Thermostat

§152(b)1F

When a split system air conditioner or heat pump is altered by the installation or replacement of the air handler, outdoor condensing unit, cooling or heating coil, or the furnace heat exchanger, and the existing thermostat is not a setback thermostat, then a new setback thermostat must be installed as described in Chapter 4.

Fuel Switching

§152(b)1C

For prescriptive compliance, new electric resistance heating systems are prohibited in alterations unless the system being replaced is an electric resistance heating system. If the existing system is gas, propane, or LPG, then new electric resistance systems are not permitted. However, changing from a gas, propane, or LPG space heating system to an electric heat pump is allowed as long as the heat pump efficiency meets minimum efficiency standards, and the heat pump installed size is shown to result in no more TDV energy use than the standard design heat pump using the performance method.

Table 8-3 – Acceptable Replacement Heating System Fuel Source(s)

Existing Heating System Fuel Source	**Acceptable Replacement Heating System Fuel Source(s)**
Electric	Electric, natural gas, or equipment with efficiency equal to or better than existing system*
Natural gas	Natural gas, or equipment with efficiency equal to or better than existing system* or a heat pump with equal or lower TDV energy use than a standard design system.
LPG	Liquefied petroleum gas, natural gas, or equipment/ system with efficiency equal to or better than existing system* or a heat pump with equal or lower TDV energy use than a standard design system.
*Proof that equipment has an efficiency that is equal to or better than the existing system can be demonstrated by an approved compliance program or other approved alternative calculation method to compare the TDV energy use of the existing system to the proposed system.	

Example 8-20

Question

Do I have to seal my duct if I replace my outdoor units in my existing house in without changing the indoor unit?

Answer

Yes, just replacing the outdoor unit (or indoor unit) by itself will trigger the duct sealing and verification requirement (§152(b)1E).

Example 8-21

Question

I have an existing electric furnace and am adding a new bedroom. Can I extend the existing ducts to the new room and use the existing furnace?

Answer

Yes. §152(b)1C generally requires that gas heating be used but allows the existing fuel type, in this case electric resistance to be extended. The existing furnace must have adequate heating capacity to meet CBC requirements for the additional space. Duct requirements apply if more than 40 ft of ducts are added.

Example 8-22

Question

I am adding a bedroom to an existing house which uses a central forced air natural gas furnace. I would like to heat the room with an electric resistance baseboard heater rather than extend the existing ductwork to reach the new space. Is this allowed?

Answer

No if using prescriptive compliance and since the existing system is gas, the addition cannot use an electric heating system. if the existing system is electric resistance, then the room may be heated with an electric resistance baseboard heater (§152(a) Exception 4). Alternatively, performance compliance can be used, modeling the electric heat, or, the existing natural gas furnace system may be extended to serve the addition, if there is adequate capacity to meet the CBC requirement.

Example 8-23

Question

My central gas furnace stopped working. Since it is about 30 years old I decided to get a new more efficient unit rather than repair the existing one. What are the requirements?

Answer

Mandatory requirements apply to the components being replaced. The furnace, of course, must meet minimum efficiency requirements, but all systems sold in California should already meet the minimum efficiency requirements. If the existing thermostat is not a setback thermostat, it must be replaced with a setback thermostat (§152(b)1F) that meets the requirements described earlier in this chapter.

All new ducts must meet insulation and construction requirements. In climate zones 2, 9-16, all existing and new ducts must be sealed and HERS verified (§152(b)1E).

The new heating unit must also be a natural gas unit (or a heat pump that provides equal or better TDV energy performance). An electric resistance furnace is not an option.

Example 8-24

Question

As part of an upgrade in an existing house, one of the ducts is being replaced because of deterioration of the insulation and jacket. What requirements apply to the replacement duct?

Answer

This is an alteration since no new conditioned space is being added. The mandatory measures for ducts apply. If more than 40 ft of duct is replaced, Package D duct insulation and sealing requirements also apply which require diagnostic testing of the whole duct system.

Example 8-25

Question

An up-flow air-handling unit with a furnace and air conditioning coil is located on a platform in the garage of an existing house. The platform is used as a return air plenum. The air-handling unit is being replaced and the platform is being repositioned to the corner of the garage (3ft away from the current location). What requirements apply to this alteration?

Answer

The mandatory requirements apply to this alteration. In particular, §150(m) prohibits raised platforms or building cavities from being used to convey conditioned air (including return air and supply air). When the platform is relocated, it is being altered, and the mandatory requirement applies. A sheet metal or other suitable duct must be installed to carry the return air to the replaced air handler. This requirement would not apply if the platform were not being altered.

In addition, the prescriptive duct sealing requirements apply per §152(b) because the air handler is being replaced, unless one of a few exceptions applies.

Example 8-26

Question:

What is meant by the term "air handler"?

Answer:

The term "air handler" is used to identify the system component that provides the central system forced air movement for the ducted heating or cooling space-conditioning system. The term "air handler" may be properly used to identify various types of central system forced air-moving components that must meet the functional requirements for different types of space-conditioning systems. For instance: A "gas furnace" air handler includes a gas combustion heat exchanger, and the central system fan, but does not include a DX cooling coil; An "electric furnace" air handler has electric heating coils, and the central system fan, but does not include a DX cooling coil; A "fan-coil unit" air handler for a split system heat pump has a DX cooling/heating coil, and the central system fan; A hydronic heat pump air handler includes the air-side DX coil, compressor, water-cooled condenser, and the central system fan. There are other air handler configuration variations as well.

Example 8-27

Question

I have a residential building that was made in the 1920's. It has a freestanding gas furnace and I want to change it to an electric wall heater. Is this permitted?

Answer

No. §152(b)Bii states that the new space-conditioning system be limited to natural gas, liquefied petroleum gas, or the existing fuel type unless it can be demonstrated that the TDV energy use of the new system is more efficient than the existing system. For your situation you would have to use gas or a heat pump for compliance.

Example 8-28

Question

What are the Standards requirements for Duct Sealing, Duct Insulation, Refrigerant Charge (RC), Cooling Coil Airflow (CCA), Fan Watt Draw (FWD), Saturation Temperature Measurement Sensors (STMS) and Temperature Measurement Access Holes (TMAH), Hole for the placement of a Static Pressure Probe (HSPP) or Permanently installed Static Pressure Probe (PSPP) for the following changeout scenarios in an existing home?

1. New or replacement outdoor condensing unit and/or indoor cooling or heating coil only (no duct alteration).
2. New or replacement furnace heat exchanger only (no duct alteration).
3. New or replacement air handler unit only (no duct alteration).
4. New or replacement entire duct system only (no air handler alteration).
5. New or replacement entire duct system and air handler only.
6. New or replacement entire duct system and outdoor condensing unit, and indoor cooling or heating coil (no air handler alteration).
7. New or replacement entire duct system, outdoor condensing unit, indoor cooling or heating coil, and air handler (i.e. entire space conditioning system).
8. New or replacement entire duct system and packaged air conditioner or heat pump (i.e. entire space conditioning system).
9. New or replacement packaged air conditioner or heat pump (no duct alteration).
10. More than 40 ft of new or replacement ducts installed (but not replacing the entire duct system as in #4 above) in unconditioned space (no other alteration).

Answer

1. Duct sealing (§152(b)1E), RC, CCA ≥ 300 CFM/ton, TMAH.
2. Duct sealing (§152(b)1E), RC, CCA ≥ 300 CFM/ton, TMAH.
3. Duct sealing (§152(b)1E), RC, CCA ≥ 300 CFM/ton, TMAH.
4. Duct sealing ≤ 6 percent (§152(b)1Di), Duct Insulation, CCA ≥ 300 CFM/ton.
5. Duct sealing ≤ 6 percent (§152(b)1Di), Duct Insulation, RC, CCA ≥ 300 CFM/ton, TMAH.
6. Duct sealing ≤ 6 percent (§152(b)1Di), Duct Insulation, RC, CCA ≥ 300 CFM/ton, TMAH.
7. Duct sealing ≤ 6 percent (§152(b)1Di), Duct Insulation, RC, CCA ≥ 350 CFM/ton, FWD ≤ 0.58 watt/CFM, TMAH, STMS, and either HSPP or PSPP.
8. Duct sealing ≤ 6 percent (§152(b)1Di), Duct Insulation.
9. Duct sealing (§152(b)1E).
10. Duct sealing (§152(b)1Dii), Duct Insulation.

Notes: RC is required in climate zones 2, 8-15. CCA and FWD are required in climate zones 10-15. Duct sealing is required in climate zones 2, 9-16. New or replacement ducts must meet the mandatory requirements of §150(m) for collars, joints, and plenum connections, and the Duct Insulation requirements of Package D in §151(f)10. Duct sealing, RC, CCA, FWD, STMS, TMAH, HSPP and PSPP must be verified by a HERS rater. An entirely new duct system can include existing parts of the original duct system (e.g., register boots, air handler, coil, plenums, etc.) if those parts are accessible and they can be sealed, as described in the Duct Sealing and Insulation section above. All Non-setback thermostats must be replaced with setback thermostats meeting the requirements of Standards Section 112(c).

8.5 Water Heating

8.5.1 Replacement Water Heaters

152(b)1G

Replacement water heaters must be either gas, LPG or the existing fuel type. The only exceptions are when it can be demonstrated that the TDV energy use of the new system is less than the existing system or when the water heater is being replaced as part of an alteration that is complying via the performance method. In other words, additional calculations are required if the replacement water heater is not either gas, LPG or the existing fuel type. The main intent of this requirement is to restrict the switch from gas to electric resistance water heaters.

When a water heater is replaced, then the mandatory requirements also apply to the water heater itself as well as any other components that are replaced. The water heater must be certified by the Energy Commission for minimum efficiency. New pipes must be insulated wherever insulation is required by the mandatory requirements.

8.5.2 Additions

§ 152(a), Exception No. 2

If an addition increases the number of water heaters serving a dwelling unit, then compliance for the addition may be determined using any of the compliance approaches under certain conditions. The “addition alone” compliance may be used for one additional water heater if either:

- The additional unit is a 50 gallon or less, gas storage or gas instantaneous, nonrecirculating water heater with an EF equal to or greater than the federal minimum standards as defined in the Prescriptive Requirements section of Chapter 5,
- The home does not have natural gas or propane available and the additional water heater is a 50gallon or less electric water heater, or electric instantaneous with an EF equal to or greater than the federal minimum standards, or
- A water-heating system determined by the Executive Director of the Energy Commission to use no more energy than the one specified in the first bullet above; or if no natural gas is connected to the building, a water-heating system determined by the Executive Director to use no more energy than the one specified in the second bullet above.

If either of the first two conditions is met, water heating calculations are not required with any of the compliance approaches, and no credit is allowed or penalty taken. Computer compliance calculations are used to determine the alternative described in the third bullet.

In order to receive credit for a water heating alteration that exceeds minimum efficiency requirements, or to use a water heater that does not meet either of the two conditions listed above, two options are available. The existing-plus-addition

performance compliance method or the whole building compliance approach may be used. See the Vendor's Compliance Software User Manual.

8.5.3 Alterations to Systems

If it takes an extended period of time for hot water to get to a point of use or if a cold water surge comes along after warm water is turned the best remedy is usually altering the distribution system. Turning up the temperature setting on the water heater will only waste more energy. Most of these alternatives will save water and some will save energy but before any alteration to the distribution is done the energy performance of that medication must be confirmed.

With one exception any alteration to the hot water distribution system must be analyzed using the performance approach to assure that the energy use of the system has not been increased. The exception to this rule is the installation of a manually controlled demand recirculation system. All other alterations, including automated controlled demand recirculation, must use the performance approach to verify energy equivalency.

Example 8-27

Question

An existing 1,500 ft² single family residence is getting a 500 ft² addition. A new 50-gallon gas water heater will replace the existing water heating system. How do the water heating requirements apply?

Answer

Since this is an alteration to an existing water heating system, no water heating calculations are required, but the mandatory measures apply. The water heater must have an EF equal to or greater than the federal minimum standards, or R-12 insulation wrap. The first 5 ft. of hot and cold pipes must be insulated. Building energy compliance for the addition may be demonstrated for either the addition alone or for the existing-plus-addition.

Example 8-28

Question

An existing 2,000ft² single family residence has one 50gallon gas water heater, and a 600 ft² addition with a new instantaneous gas water heater is proposed. How does this comply?

Answer

When there is an increase in the number of water heaters with an addition, the standards allow addition alone compliance in certain circumstances. Since this is an instantaneous gas water heater, if it can be demonstrated that it uses no more energy than a 50gallon gas non-recirculating storage tank (see the Prescriptive Requirements section above), then it may be installed. Since §151(f)8B declares a single instantaneous gas water heater to be equivalent to the 50gallon storage water heater, then no water heating calculations are required. Mandatory measures apply.

Other alternatives are to show compliance with existing-plus-addition or whole building compliance.

Example 8-29

Question

Existing single family residence with one electric water heater; a 500 ft² addition with a 30gallon electric water heater is proposed. Does this comply?

Answer

When there is an increase in the number of water heaters with an addition, the Standards allow addition alone compliance in certain circumstances. If this residence does not have natural gas connected to the building and the new water heater has an EF equal to or greater than the federal minimum standards, the system automatically complies. No water heating calculations are submitted. If it does have natural gas connected, then the new water heater must be natural gas, or calculations are required to show the proposed water heater would use no more TDV energy than a 50 gallon natural gas water heater with an EF equal to the federal minimum standards.

8.6 Lighting

All of the lighting requirements apply to both additions and alterations as appropriate. These are all mandatory requirements; therefore they apply regardless of whether the prescriptive or performance approach is followed for the other building components. See Chapter 6 for information about the lighting requirements.

The requirements for new additions and new lighting systems are the same as new construction that is described in Chapter 6 of this compliance manual.

Alteration requirements apply to all altered lighting components in all areas of the house that are covered under §150(k). Luminaires or components that are not altered do not need to meet the requirements of the Standards.

Example 8-30

Question

I am doing minor renovations to my kitchen that has six recessed incandescent cans and I am adding a new luminaire over the sink. Does this luminaire have to be a high efficacy luminaire?

Answer

Yes, all new luminaires must be high efficacy until at least 50 percent of the total lighting wattage comes from high efficacy luminaires.

Example 8-31

Question

In the kitchen above I am replacing one of the recessed luminaires. Must the new luminaire be high efficacy?

Answer

Yes, the new luminaire is the altered component and must be high efficacy. In fact, all luminaire replacements must be high efficacy until at least 50 percent of the total lighting wattage comes from high efficacy luminaires.

Example 8-32

Question

I am completely remodeling my kitchen and putting in an entirely new lighting system. How do the Standards apply to this case?

Answer

At least half the lighting watts must be high efficacy luminaires. This is treated like new construction.

Example 8-33

Question

I am replacing my incandescent bath bar in the bathroom. Must the new luminaire meet the Standards requirements?

Answer

Yes, in this case, the bath bar is the altered component and must meet the Standards requirements of §150(k), which requires high efficacy luminaires in the bathrooms. The alternative would be to use the bath bar in conjunction with a “manual-on” occupant sensor.

Example 8-34

Question

Are there ever situations with a kitchen lighting alteration where I can end up with more than 50 percent low efficacy wattage after the alteration?

Answer

Yes, there is a tradeoff option which allows an additional 50W or 100W of low efficacy lighting to be installed in a residential kitchen, depending on the size of the house. The Standards allow this additional low efficacy wattage if all permanently installed luminaires in garages, laundry rooms, closets greater than 70 ft², and utility rooms are high efficacy and are controlled by a vacancy sensor, and special lighting controls are installed in the kitchen, You may need to alter the lighting and lighting controls in these other rooms before you can gain this additional low efficacy lighting for the kitchen alteration. Please see Section 6.4.2 for more information about the kitchen low efficacy tradeoff option.

8.7 Performance Method: Additions & Alterations

§152(a)2

The performance compliance method is an alternative to the prescriptive requirements described in the previous sections. If the performance compliance approach is used, then the mandatory requirements still apply but the prescriptive requirements such as fenestration area limits, duct sealing, and refrigerant charge measurement may or may not be necessary depending on the overall performance of the addition or alteration.

For additions, there is a choice of three performance approaches: the whole building, the addition alone and the addition in combination with the existing house.

8.7.1 Whole Building Approach

The whole building method is usually the most stringent and is used only for major rehabilitations of existing houses that also involve an addition. Under this approach the existing building and addition are modeled together as if they were a new building. This approach may also be used for alterations. When whole building compliance is used, all components that are in the existing structure must comply with mandatory minimums or the allowed exceptions.

8.7.2 Addition Alone Approach

The "addition alone" option is similar to showing compliance for a new building.[1] Analyzing additions alone works well for relatively large additions with moderate window and skylight area. If an addition alone does not comply with the Standards, improvements to the existing building may be necessary, and the Existing + Addition + Alteration method must be used.

Addition Alone method cannot be used when alterations to the existing building are required to compensate for failure of an addition to comply alone or when alterations to the water heating system are proposed. In these events, either the Whole Building or the Existing + Addition + Alteration approaches can be used.

[1] When modeling additions alone, the number of dwelling units is input as the ratio of the addition conditioned floor area to the entire existing house plus addition conditioned floor area. This is needed in order for the internal gains, occupant density and other modeling assumptions to be properly prorated.

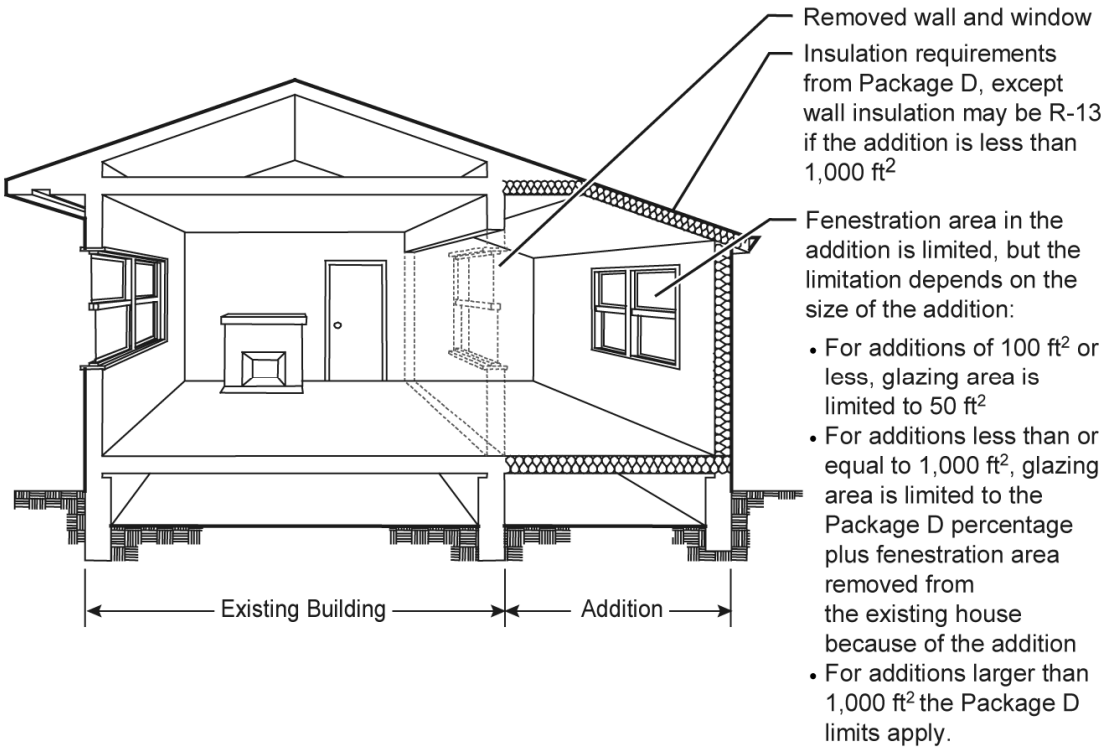

Figure 8-3 – Addition Alone Performance Compliance Approach

Example 8-35

Question

When using the performance approach for the addition alone, do the refrigerant charge, and fan airflow and watt draw measurements in §151(f)7 need to be met for central split system air conditioners serving an addition?

Answer

If existing equipment is used to serve the addition, this requirement does not need to be met as specified by Exception 3 to §152(a). For performance compliance in climate zones that require a refrigerant charge, and fan airflow and watt draw measurements, in Package D (including compliance with charge indicator light, access hole (TMAH), saturation temperature measurement sensors (STMS), and static pressure probe (HPSD or PSPP) requirements of §151(f)7), a hypothetical standard design SEER split system with this credit would be modeled in both the standard and the proposed designs, resulting in neither credit nor penalty related to this feature.

If a new central split system is installed to serve the addition, it must either:

- Meet the refrigerant charge, and fan airflow and watt draw measurements in order to comply with Package D, including compliance with charge indicator light, access hole, saturation temperature measurement sensors (TMAH and STMA), and static pressure probe (HPSD or PSPP) requirements of §151(f)7. See Section 8.4 for details.
- Meet or exceed the efficiency levels in Table 4-4 in Section 4.3.1 of this manual (to avoid the diagnostic testing and field verification)
- Meet the criteria modeled for the proposed design in the performance approach.

8.7.3 Existing + Addition + Alteration Approach (also applies to Existing + Alteration when there is no Addition)

For additions, the most flexible compliance method is to consider the entire existing building along with the addition (Existing + Addition + Alteration)[2]. The rules for this method are documented in the program vendor's compliance program supplement. Compliance is shown using an approved computer program. Through this method, credit may be taken for energy efficiency features added to the existing building. When prescriptive approach is used, compliance can be demonstrated if the altered component meets or exceeds the requirements of §152(b)1 for that component. When the performance approach is used, the altered component must meet or exceed the requirements in §152(b)2, or another alteration(s) must be made to the existing building, which exceeds the requirements of §152(b)2 that saves the additional energy necessary to at least make up for the alteration(s) that fail to meet §152(b)2. Alternatively, when there is an addition, the addition could be designed to exceed prescriptive requirements to offset proposed existing house alterations that do not meet prescriptive requirements. The rest of this section assumes that the performance approach is used to demonstrate compliance.

In general, the following rules apply to Existing + Addition + Alteration:

1. Altered fenestration components must meet or exceed the U-factor and SHGC requirements of Table 151-C, the Package D, in order

[2] This method may also is be used whenever an alteration is made to existing buildings, whether or not there is an addition to the building at the same time.

to result in an energy "credit" in the performance calculation. Altered fenestration components not meeting the requirements of §152(b)2 will result in an energy "penalty" in the compliance calculation. The allowed fenestration area will be the fenestration area of the existing building.

2. For envelope alterations, insulation must be upgraded to meet the mandatory minimums of §150(c) for wall insulation, §150(d) for floor insulation, and §150(a), and §118(d) for ceiling/roof insulation Note that the requirements of §118(d) are always more stringent than §150(a).
3. Space conditioning equipment must meet or exceed the requirements of Table 151-C, the Package D (see Section 8.4, HVAC, of this chapter). The mandatory measures must also be met. The failure to meet non-mandatory requirements of Package D, which includes refrigerant charge, fan watt drawn, access holes (TMAH and STMS), and pressure probes (HPSD or PSPP) will result in an energy "penalty" in the compliance calculations. If a charge indicator display (CID) is installed, compliance with TMAH and STMS is not required.
4. Duct alterations must meet the requirements of §152(b)1D, §152(b)1E, and §152(b)1F (see Section 8.4, HVAC, of this chapter). The mandatory measures must be met. The failure to meet non-mandatory requirements of §152(b)1D, §152(b)1E, and §152(b)1F will result in an energy "penalty" in the compliance calculations.
5. Alterations to service water heating systems must meet the mandatory requirements of §150(j) and prescriptive requirements of §151(b)1 (see Section 8.5, Water Heating, of this chapter). The failure to meet non-mandatory requirements of §151(b)1 will result in an energy "penalty" in the compliance calculations.
6. Alterations to the roofing products must meet or exceed the requirements of §152(b)1H. The failure to meet non-mandatory requirements of §152(b)1H will result in an energy "penalty" in the compliance calculations.

The proposed design budget is based on the actual value of the altered component(s). If the altered component values (proposed design) meets or exceeds the requirements of §152(b)2B (items 1 through 6 above), then there will be an energy credit for the difference between the proposed design and the standard design, where the standard design is based on the existing condition of that component (the existing condition may be based on documentation at the time of application for the alteration permit or on the vintage table in Appendix B). If the altered component does not meet the requirements of §152(b)2B (items 1 through 6 above), there will be an energy penalty for the difference between the proposed design and the standard design, where the standard design is based on having that component meet the requirements in §152(b)2B.

Therefore, it is important to note that the standards budget is calculated in two different ways depending upon whether the altered component meets or fails to meet the requirements (mandatory or prescriptive) for the component that are described in §152(b)2B (items 1 through 6 above): 1) if the altered component

meets or exceeds these requirements (§152(b)2B), the standards budget is based on the actual value for the component; or 2) if the altered component fails to meet the requirements(mandatory or prescriptive), then the standards budget will be based on prescriptive requirements for that component (§152(b)2B).

Alterations may include previous improvements that were made to the building after original permit (when the existing building was first constructed). The upgraded efficiency value of that component will be the proposed design and the standard design will be based on the vintage of the original building (subject to the same limitations as described in the previous paragraph). The permit applicant must provide evidence that the previous improvements were made subsequent to the original construction of the building. Such evidence may involve receipt, signed statement from previous owners, or in case where previous owners are not available, signed statement of the current owner or other record.

Note that previous improvements that have been used to achieve compliance for previous additions and alterations should not be considered for compliance for subsequent additions and alterations. In this case the efficiency value of the previously altered component should be shown as the existing condition. In this case, existing insulation and glazing that are to be considered as unchanged for the purposes of achieving compliance are modeled in both the standard and proposed designs as they presently exist when this can be ascertained, and modeled in both the standard and proposed design as vintage table values when existing conditions are not readily discernible. The compliance software performance program will use the modeled existing component values or the vintage table values to develop the Standard budget based on the information described above. For example, if a 1975 building in climate zone 12 was built with R-11 ceiling insulation and was subsequently upgraded to R-38, then the compliance software performance program would model the existing condition as R-13 consistent with the Vintage Table and model the proposed condition as R-38 consistent with the previously made improvement. Consequently, the credit would be relative to the difference between R-13 and R-38.

Note that if in this example, had the ceiling insulation been upgraded to any value less than R-30 (for example R-19), which is the mandatory requirement in §118(d)1 for ceiling insulation in climate zone 12, the alteration would be subject to a penalty for the difference between R-30 and R-19. Also, note that according to §151(b), Opaque envelope insulation must meet the most stringent of the mandatory requirements of §118(d)1 and §150(a).

Example 8-36

Question

A 1,600 ft² 1980 house that is in climate zone 12 is being renovated as follows: A 500 ft² room will be added including 120 ft² of new glazing, a 200 ft² wall and 100 ft² of old glazing will be removed, and the attic insulation in the existing portion will be upgraded to R-38. The new addition will be connected to the existing HVAC and duct system. If the performance approach is used to demonstrate compliance, how does the compliance software establish the standard and proposed designs?

Answer

You must refer to the compliance software documentation for the details of modeling using the existing plus addition plus alteration approach. In general, the standard design is established by the software based on vintage table values (or on actual existing conditions if those can be determined) for roof insulation, wall insulation, floor insulation, water heating energy factor, HVAC equipment efficiencies, and fenestration U-factors and SHGC values. This includes all features of the "existing" portion of the house before any renovations begin, including the wall and window areas that are to be removed. The standard design is modeled with sealed and tested ducts for any new duct that is extended to the new addition. This establishes the standard design, which determines the energy budget that is the basis for comparison with the proposed design to determine whether or not the project complies.

The proposed design for this project is based on the entire building after the addition and all alterations are completed. For example, in the "final building," 200 ft² of old wall and 100 ft² of old windows no longer exist, and therefore are not modeled. The final building has 500 ft² of new floor space and 120 ft² of new windows. The proposed design also includes the R-38 attic insulation alteration that was made to the existing portion of the house. The area of the final building is now 2,100 ft² (1,600 + 500, existing building plus addition). The remainder of the existing house that did not go through any alterations is modeled with the same vintage table values (or actual existing conditions) that are modeled for the standard design, including the HVAC system. All components of the addition portion of the building are modeled using the proposed design values (just like for any newly constructed building). Note that any new ductwork that is extended to the new addition must either be sealed and tested or modeled as untested, which would require the higher energy use to be made up through additional efficiency measures elsewhere in the existing building or the addition.

If the building does not pass, other components of the existing building and/or the addition may have to be improved to achieve compliance. For example, the water heater or the HVAC equipment in the existing portion of the house may be upgraded to achieve additional credits towards compliance. Sealing the ducts in the existing portion of the house results in a relatively large compliance credit. If other components of the existing building are improved (altered), then they must meet the requirements for those components in §152(b)2 to earn compliance credit. In the addition, higher performing windows and higher levels of roof and wall insulation may also be used to achieve compliance.

Example 8-37

Question

For the building in the question above, how does the compliance software establish the proposed design if the addition is served by a new SEER 13 packaged gas/electric unit with a 0.82 percent AFUE?

Answer

There will be a credit for the difference between the Package D value of 78 percent and the proposed equipment efficiency of 82 percent AFUE.

Example 8-38

Question

For the 1980 building in the examples above, an operable single pane metal window is replaced with a 0.55 U-factor window. Does this alteration result in a compliance credit? How about the case where the existing window is replaced with a window that has a U-factor of 0.35?

Answer

§152(b)2B states that to get compliance credit for any alterations in the existing building, the altered components must meet all applicable mandatory and prescriptive requirements specified in items 1 through six of that section for that component. From the vintage tables, the operable single pane window has a U-factor of 1.28. The prescriptive requirement specified in Package D for window U-factor in climate zone 12 is 0.40.

When the existing window is replaced with a window with a U-factor of 0.55, which does not meet the prescriptive requirements for that climate zone (Package D), there is a compliance penalty. The standard design for the window in this case is the 0.40 U-factor specified in Package D, while the proposed design is the 0.55 U-factor. So the penalty would be the difference between 0.40 and 0.55.

If on the other hand, the existing window is replaced with a window that has a U-factor of 0.35 (which meets the requirements of Package D), then the alteration will be eligible for a large compliance credit. The standard design for the window is based on the 1.28 U-factor from the default fenestration tables, while the proposed design is the 0.40 U-factor. So the credit would be the difference between 1.28 and 0.35.

Although this example describes a window alteration, the same principles apply to other building systems, such as other building envelope components as well as HVAC and water heating equipment.

Example 8-39

Question

An addition of 590 ft² is being added to an existing 2,389ft² single family house. How do you demonstrate compliance using the existing-plus-addition method?

Answer

This process requires the following steps:

1. Collect information about the existing building.

2. Enter the information about the addition and the existing building into the compliance program, identifying those features that are existing and unchanged, those that are existing and altered, and those that are new. Proper identification of each of these features is critical to determining compliance. Analyze this set of input data with the compliance program to determine if compliance is achieved.

3. Consult the vendor's compliance supplement to determine how to model existing plus addition plus alteration. Note that alterations to the existing building must meet the efficiency levels described in §152 before a credit is available for showing compliance of the addition.

Example 8-40

Question

When using the existing-plus-addition performance approach, do the refrigerant charge, access holes (TMAH and STMS) or CID, airflow, watt draw measurement, and static pressure (HPSP or PSPP) requirements in §151(f) need to be met for central split system air conditioners serving an addition?

Answer

If existing equipment is extended to serve the addition, this requirement does not need to be met as specified by Exception 3 to §152(a). For performance compliance in climate zones that require a refrigerant charge and airflow measurement in Package D, a hypothetical standard design SEER split system with this credit would be modeled in both the standard and the proposed designs (for example, values from the vintage table, or minimally complying equipment), resulting in neither credit nor penalty related to this feature.

If a new central split system is installed to serve the addition, it must meet the requirements of §152(b)1C where installation of a new air conditioner to serve both the existing house and the addition is considered an alteration, and must meet the requirements for diagnostically tested refrigerant charge measurement fan airflow, watt draw and other requirements of §151(f)7. The duct sealing requirements of §152(b)1E must also be met for any newly extended ducts in the addition.

Example 8-41

Question

When using the existing-plus-addition performance compliance method, can credit be gained by doing refrigerant charge and airflow measurement on the existing central split system air conditioner in the existing house?

Answer

Yes, the same requirements for refrigerant charge and airflow and watt draw measurement for a new central split system air conditioner must be met, including HERS rater verification. The credit is offered through the performance method, which adjusts the efficiency of equipment, depending on whether or not the refrigerant charge and airflow have been diagnostically tested.

Example 8-42

Question

When using the existing plus addition performance method, can compliance credit be gained by sealing the existing ducts when it was not required for prescriptive compliance?

Answer

Yes. The standard design must be selected as either “untested duct systems in homes built after June 1, 2001” or “untested duct systems in homes built prior to June 1, 2001.” If the entire duct system is designed and tested to have a leakage of less than 6 percent and is diagnostically verified by a HERS rater, then significant compliance credit may be available. See the discussion of the performance approach in the text above.

Example 8-43

Question

Where do radiant barriers need to be installed when using the performance approach where no credit is taken for retrofitting a radiant barrier in the existing house?

Answer

The radiant barrier only needs to be installed on the underside of the roof assembly associated with the addition.

Example 8-44

Question

When using the existing plus addition performance compliance method, can credit be gained by installing a radiant barrier in the existing house attic? If so, where does the radiant barrier need to be installed?

Answer

Yes, installing a radiant barrier in the existing building will result in a credit relative to the standard design for existing buildings permitted (or constructed) prior to June 1, 2001. The radiant barrier must be installed over the entire attic/roof area including gable walls. If there are roof/ceiling assemblies where it is not possible to reach the underside of the roof, such as roof/ceiling assemblies using enclosed rafters which are not proposed to be exposed as part of the project, the radiant barrier cannot be properly installed and compliance credit is not possible.

Example 8-45

Question

I am adding a room to an existing building. As part of an alteration to the existing building in climate zone 12, I am upgrading a single-pane clear glass window with a U-factor of 1.2 and SHGC of 1.0 to a dual-pane window with a U-factor of 0.50 and SHGC of 0.45. Do I receive credit toward the addition compliance for installing this window?

Answer

No. There will be a penalty toward achieving compliance since the window is not as efficient as required by the prescriptive package for climate zone 12 which requires a U-factor of 0.40 and an SHGC of 0.40. The penalty for the U-factor is based on the difference between 0.40 and 0.50 and for the SHGC is based on the difference between 0.40 and 0.45. If fenestration meeting Package D requirements is installed, then the credit is available.

Example 8-46

Question

I am planning on installing R-25 insulation in the attic of an existing building in climate zone 13 that was built in 1970. Can I use this added insulation as a credit for trading with features in an addition?

Answer

No. When insulation is added to an attic, it must comply with the §118, which sets a mandatory minimum for attic insulation of R-30 for climate zone 13. No credit is allowed until the mandatory minimum R-30 is achieved. However, if you install R-30 you are allowed to take credit for the difference between the R-30 and the vintage table U-factor for a 1970 building if the vintage is documented to the enforcement agency. For a 1970 building, the vintage ceiling insulation is equivalent to R-11.

Example 8-47

Question

I am planning on installing R-25 insulation in a vaulted ceiling without an attic space that was built in 1970. Can I use this added insulation as a credit for trading with features in an addition?

Answer

Yes. Since there is no attic space, the requirements of §118 do not apply. Therefore, to receive credit, the ceiling must meet the requirements of §150(a), the equivalent of R-19 ceiling insulation between wood-framing members. When you install R-25 you are allowed to take credit for the difference between the R-25 and the vintage table U-factor for a 1970 building if the vintage is documented to the enforcement agency.

9 New Solar Homes Partnership

Guidelines for complying with the requirements of the New Solar Homes Partnership can be found in the New Solar Homes Partnership Guidebook. A link to the guidebook can be found at:

http://www.gosolarcalifornia.ca.gov/documents/index.html.

10 INDEX

A

Additions, 1-9, 1-12, 1-26, 4-29, 4-43, 8-1, 8-5, 8-7, 8-8, 8-22, 8-23, 8-33, 8-38
air conditioner, 1-3, 1-6, 1-18, 1-23, 2-9, 2-13, 2-30, 2-37, 3-27, 4-2, 4-3, 4-4, 4-7, 4-9, 4-10, 4-12, 4-14, 4-17, 4-18, 4-19, 4-20, 4-39, 4-82, 4-87, 4-89, 4-90, 4-91, 4-95, 7-2, 8-1, 8-2, 8-20, 8-21, 8-22, 8-23, 8-24, 8-28, 8-32, 8-41, 8-47, 8-48
Airflow, 2-13, 2-30, 4-18, 4-20, 4-72, 4-89, 4-92, 8-20, 8-24, 8-32
alterations, 1-1, 1-2, 1-7, 1-9, 1-10, 1-12, 1-14, 1-15, 1-17, 2-1, 2-3, 2-22, 2-24, 2-28, 2-30, 2-35, 3-5, 3-53, 4-1, 6-1, 7-14, 8-1, 8-4, 8-5, 8-9, 8-13, 8-14, 8-17, 8-18, 8-19, 8-21, 8-28, 8-34, 8-36, 8-39, 8-41, 8-42, 8-43, 8-45, 8-46
ASHRAE Standard, 1-6, 3-27, 3-63, 3-72, 4-1, 4-3, 4-43, 4-44, 4-46, 4-57, 4-66, 4-70, 4-90
automatic, 3-59, 4-28, 4-41, 4-51, 4-57, 4-82, 5-29, 6-23, 6-26, 6-27, 6-28, 6-29, 6-41, 6-43, 6-50

B

ballast
electronic, 1-2, 1-5, 2-2, 2-4, 2-6, 2-14, 2-15, 2-17, 2-20, 2-23, 2-25, 2-26, 2-31, 4-52, 6-2, 6-10, 6-20, 6-31, 6-33, 6-62, 8-26
ballasts
dimming, 6-23, 6-30, 6-31, 6-46
batt insulation, 3-35, 3-50, 3-72, 3-73
boiler, 1-18, 4-30, 4-74, 4-75, 4-77, 4-81, 5-8, 5-23, 5-25
branch circuit, 6-9, 6-17, 6-25, 6-39
building
existing, 1-8, 1-10, 1-11, 1-12, 1-14, 2-1, 2-17, 3-2, 3-6, 3-31, 3-32, 3-64, 4-1, 4-29, 4-55, 4-60, 6-1, 7-6, 7-14, 8-1, 8-2, 8-3, 8-4, 8-5, 8-6, 8-7, 8-8, 8-10, 8-11, 8-12, 8-13, 8-14, 8-15, 8-16, 8-17, 8-18, 8-20, 8-21, 8-22, 8-28, 8-29, 8-31, 8-32, 8-33, 8-34, 8-39, 8-41, 8-42, 8-43, 8-44, 8-45, 8-46, 8-47, 8-48, 8-49, 8-50
building envelope, 1-1, 1-2, 1-3, 1-12, 1-13, 1-17, 1-18, 1-24, 2-6, 2-12, 2-13, 3-1, 3-16, 3-27, 3-29, 3-50, 3-60, 3-63, 3-64, 3-65, 3-68, 3-69, 3-70, 3-71, 3-73, 3-74, 4-24, 4-45, 4-46, 4-84, 5-18, 5-21, 6-55, 7-4, 8-5, 8-15, 8-46
building envelope air leakage, 1-2, 2-37, 3-6, 3-7, 3-13, 3-41, 3-63, 3-64, 3-68, 3-69, 3-71, 4-24, 4-25, 4-62, 6-58, 8-5, 8-17, 8-19
building orientation, 3-2
building type, 1-7, 1-11, 1-15

C

Certificate of Compliance, 2-1, 2-2, 2-3, 2-4, 2-5, 2-6, 2-11, 2-12, 2-14, 2-17, 2-18, 2-19, 2-20, 2-21, 2-22, 2-23, 2-25, 2-29, 2-31, 2-32, 2-34, 2-35, 3-28, 3-73, 3-75, 4-30, 4-88, 4-90, 5-22, 7-5, 7-8, 7-9, 7-12, 7-13, 8-25
climate data, 1-19
Climate Zones, 1-19, 1-20, 3-53, 8-16
compact fluorescent, 6-5, 6-6, 6-7, 6-9, 6-14, 6-16, 6-19, 6-20, 6-28, 6-31, 6-33, 6-39, 6-51, 6-57, 6-62
compliance documentation, 1-1, 1-5, 1-19, 2-3, 2-5, 2-6, 2-10, 2-11, 2-15, 2-16, 2-17, 2-21, 2-22, 2-25, 2-28, 3-12, 3-28, 3-29, 3-49, 3-73, 4-8, 4-13, 4-88, 5-4, 5-22, 5-23, 7-8, 7-13, 8-13, 8-25
condensation, 3-36, 3-72, 4-55, 6-55
construction documents, 2-3, 2-4, 2-5, 3-28
control device, 3-66, 6-27

Controlled Ventilation Crawlspace, 3-58
controls, 1-2, 4-7, 4-43, 4-46, 4-51, 4-53, 4-54, 4-56, 4-60, 4-79, 4-82, 4-88, 5-3, 5-4, 5-9, 5-13, 5-14, 5-17, 5-19, 5-20, 5-23, 5-24, 5-25, 5-26, 5-28, 5-29, 6-2, 6-3, 6-22, 6-23, 6-26, 6-27, 6-30, 6-31, 6-34, 6-37, 6-41, 6-42, 6-47, 6-48, 6-54, 7-4, 7-14, 8-19, 8-38
Controls, 4-1, 4-7, 4-39, 4-53, 4-60, 5-13, 6-23, 6-26, 6-37
curtain wall, 3-13

D

Dampers, 4-28, 8-19
deadband, 5-29
design conditions, 1-20, 4-8, 4-13, 4-85
design professional, 2-18, 2-19
directly conditioned, 7-9
distribution losses, 5-24
distribution system, 1-2, 1-4, 1-6, 4-21, 4-74, 4-77, 4-78, 4-81, 4-86, 5-1, 5-3, 5-4, 5-17, 5-18, 5-20, 5-21, 5-22, 5-23, 5-24, 5-25, 5-26, 5-28, 7-3, 7-5, 8-21, 8-34
doors, 1-11, 3-1, 3-6, 3-7, 3-12, 3-15, 3-16, 3-18, 3-19, 3-29, 3-64, 3-65, 3-66, 3-67, 3-68, 3-70, 4-41, 4-43, 4-53, 4-62, 4-85, 4-86, 6-35, 6-36, 6-41, 7-4, 8-3, 8-13, 8-22
Duct Sealing, 1-26, 2-30, 2-36, 8-20, 8-32
dwelling unit, 1-7, 1-8, 1-13, 1-14, 1-19, 2-14, 2-15, 2-16, 2-17, 2-18, 2-21, 2-22, 2-23, 2-26, 2-29, 2-30, 2-31, 2-32, 2-33, 2-34, 2-35, 2-36, 2-37, 4-24, 4-40, 4-43, 4-46, 4-59, 4-60, 4-61, 4-63, 4-74, 5-3, 5-4, 5-9, 5-17, 5-19, 5-20, 5-21, 5-22, 5-23, 5-26, 5-27, 5-28, 6-1, 6-2, 6-3, 6-41, 6-47, 6-50, 6-51, 6-53, 6-56, 7-5, 7-8, 7-9, 7-10, 7-11, 7-13, 8-25, 8-33, 8-39

E

EER, 2-9, 2-30, 4-10, 4-11, 4-18, 4-19, 4-20, 4-21, 4-83, 4-84, 4-87, 4-89, 7-2, 7-6, 7-13
electric resistance, 1-18, 4-2, 4-4, 4-7, 4-9, 4-40, 4-77, 5-12, 5-21, 5-27, 7-13, 7-14, 8-28, 8-29, 8-33
electric resistance heat, 4-7, 4-40, 5-12, 5-27, 7-14, 8-28
elevators, 1-12
emittance, 3-3, 3-4, 3-5, 3-37, 3-52, 3-53, 3-54, 3-55, 3-76, 8-6, 8-7, 8-15, 8-16
enclosed space, 3-47
energy efficiency ratio (EER), 4-89, 4-90
Energy Factor, 5-2, 5-5, 5-6, 5-17, 5-24, 5-25
energy factor (EF), 5-5
Evaporative Cooler, 1-7, 4-82
exhaust air, 4-24, 4-28, 4-47, 4-49, 4-60, 4-74
exhaust fan, 4-45, 4-47, 4-49, 4-53, 4-55, 4-56, 4-57, 4-58, 4-59, 4-60, 4-61, 4-71, 4-72, 4-74, 6-2, 6-21, 6-22, 6-26, 6-57
existing equipment, 8-41, 8-47
existing system, 8-22, 8-28, 8-29, 8-31, 8-33
explanation, 5-21
exterior lighting, 6-50

F

fan coils, 4-75
fan power, 4-20, 7-6
fenestration, 1-2, 1-5, 1-6, 1-18, 1-21, 2-12, 3-2, 3-3, 3-6, 3-7, 3-8, 3-9, 3-10, 3-11, 3-12, 3-13, 3-15, 3-16, 3-18, 3-19, 3-20, 3-21, 3-22, 3-24, 3-25, 3-26, 3-27, 3-28, 3-29, 3-60, 3-64, 3-74, 3-75, 3-76, 3-77, 3-78, 7-4, 7-5, 8-2, 8-7, 8-8, 8-9, 8-10, 8-11, 8-13, 8-14, 8-38, 8-42, 8-45, 8-46, 8-50

Fenestration Terminology, 3-75
F-factor, 4-79
field inspection, 2-16
Field Inspection, 2-7, 3-29
Field Verification, 2-2, 2-8, 2-9, 2-11, 2-14, 2-15, 2-17, 2-20, 2-22, 2-23, 2-26, 2-29, 2-30, 2-31, 2-32, 2-33, 2-34, 2-35, 3-75, 4-54, 4-90, 5-24, 7-9, 7-13, 8-25, 8-26
fixture, 5-26, 6-5, 6-28, 6-62
flue damper, 3-66, 3-68, 4-8
fluorescent, 6-5, 6-6, 6-9, 6-16, 6-18, 6-19, 6-20, 6-30, 6-31, 6-33, 6-37, 6-41, 6-45, 6-51, 6-55, 6-62
fluorescent lamp, 6-5, 6-6, 6-16, 6-19, 6-20, 6-30, 6-31, 6-37, 6-62
freeze protection, 5-27
furnaces, 1-21, 1-23, 4-3, 4-4, 4-5, 4-6, 4-8, 4-38, 4-46, 4-86, 5-11

G

garage, 1-8, 1-16, 2-14, 3-43, 3-44, 3-47, 3-65, 4-43, 4-45, 4-46, 4-59, 4-61, 4-62, 4-63, 6-21, 6-29, 6-30, 6-35, 6-41, 6-42, 6-45, 6-46, 8-1, 8-31
gas water heaters, 5-2, 5-6, 5-17, 5-18, 5-19, 5-22, 5-25, 5-30, 7-4
general lighting, 6-21, 6-43
gutter, 3-60

H

habitable story, 1-7, 1-16
heat capacity (HC), 3-41, 3-55
heat exchangers, 4-78
Heat Pump, 2-30, 4-6, 4-7, 4-9, 4-10, 4-11, 4-83, 5-3, 5-25
heat pumps, 1-18, 2-13, 4-1, 4-4, 4-6, 4-7, 4-9, 4-10, 4-12, 4-14, 4-17, 4-39, 4-40, 4-77, 4-83, 4-84, 4-91, 8-20, 8-22, 8-23, 8-24
historic, 1-9, 1-10
HSPF, 1-18, 4-7, 4-78, 4-84, 7-13
HVAC, 1-1, 1-2, 1-6, 1-9, 1-12, 1-13, 1-19, 1-24, 1-26, 2-3, 2-6, 2-7, 2-12, 2-13, 2-19, 2-20, 2-24, 2-32, 2-35, 2-36, 2-37, 3-6, 3-65, 4-1, 4-2, 4-21, 4-30, 4-42, 4-46, 4-50, 4-53, 4-60, 4-62, 4-66, 4-67, 4-71, 4-89, 4-91, 6-42, 7-4, 7-6, 7-8, 7-13, 8-18, 8-19, 8-25, 8-26, 8-42, 8-44, 8-45, 8-46
Hydronic Heating Systems, 4-74

I

incandescent, 2-7, 6-5, 6-6, 6-9, 6-10, 6-11, 6-14, 6-18, 6-19, 6-25, 6-29, 6-30, 6-31, 6-33, 6-39, 6-45, 6-46, 6-48, 6-49, 6-51, 6-62, 8-36, 8-38
indirectly conditioned space, 1-11, 1-21, 4-42, 8-3
indoor air quality, 1-6, 3-27, 3-72, 4-1, 4-43, 4-85
infiltration, 1-2, 1-17, 2-7, 3-1, 3-10, 3-12, 3-13, 3-27, 3-29, 3-31, 3-55, 3-65, 3-66, 3-68, 3-69, 3-71, 4-24, 4-43, 4-44, 7-6, 8-19
input wattage, 6-12, 6-16, 6-18, 6-24, 6-33, 6-34
Installation Certificate, 2-2, 2-6, 2-8, 2-11, 2-14, 2-16, 2-17, 2-19, 2-20, 2-21, 2-22, 2-23, 2-24, 2-25, 2-28, 2-29, 2-31, 2-32, 2-33, 2-34, 2-35, 3-29, 3-33, 3-51, 3-74, 4-89, 5-23, 6-32, 7-9, 7-13
Insulation, 1-6, 1-24, 1-26, 2-7, 2-8, 2-13, 2-30, 3-1, 3-5, 3-29, 3-30, 3-31, 3-32, 3-33, 3-34, 3-38, 3-39, 3-42, 3-43, 3-44, 3-45, 3-46, 3-47, 3-48, 3-50, 3-51, 3-57, 3-73, 3-74, 3-75, 4-12, 4-13, 4-21, 4-28, 4-29, 4-31, 4-75, 4-77, 4-79, 4-80, 5-4, 5-6, 5-7, 5-8, 5-16, 5-20, 5-21, 5-24, 5-26, 5-27, 5-28, 7-2, 8-6, 8-8, 8-15, 8-18, 8-20, 8-32
interior shading, 3-16, 3-26

L

lighting
warehouse, 1-14, 6-5
lighting power allowance, 1-9
location data, 1-20
Log Homes, 3-55
low-rise residential, 1-1, 1-3, 1-7, 1-9, 1-12, 1-14, 1-15, 1-16, 1-19, 2-2, 2-12, 2-18, 3-6, 3-9, 3-16, 3-49, 3-62, 4-1, 4-2, 4-43, 5-1, 6-3, 6-47, 6-53, 7-3, 7-8, 8-2
luminaire, 3-36, 6-1, 6-2, 6-5, 6-6, 6-7, 6-8, 6-9, 6-10, 6-11, 6-12, 6-13, 6-14, 6-15, 6-16, 6-17, 6-18, 6-19, 6-22, 6-23, 6-24, 6-25, 6-27, 6-33, 6-34, 6-38, 6-39, 6-41, 6-42, 6-43, 6-45, 6-46, 6-47, 6-48, 6-51, 6-55, 6-56, 6-57, 6-58, 6-59, 6-60, 6-61, 6-62, 8-36, 8-37, 8-38

M

manual, 1-1, 1-2, 1-7, 1-9, 1-22, 2-2, 2-4, 2-7, 2-10, 2-14, 2-23, 3-8, 3-15, 3-36, 3-43, 3-46, 3-47, 3-49, 3-69, 3-72, 3-75, 3-78, 4-4, 4-44, 4-45, 4-57, 4-74, 5-17, 5-29, 5-30, 6-23, 6-27, 6-28, 6-29, 6-34, 6-42, 6-43, 6-47, 7-8, 7-14, 8-1, 8-15, 8-36, 8-38, 8-41
mechanical heating, 1-10, 8-3
metal framing, 3-38, 3-52, 5-7
motors, 5-12, 5-13, 5-30
multifamily buildings, 1-6, 1-7, 1-9, 2-17, 2-18, 3-20, 3-44, 4-74, 5-5, 5-20, 5-21, 5-23, 6-2, 7-9

N

National Fenestration Rating Council, 3-77
Non-Central Space Cooling Equipment, 4-11
non-circulating systems, 5-27

O

occupant sensor, 6-2, 6-26, 6-27, 6-28, 6-29, 6-34, 6-53, 8-38
orientation, 1-15, 1-17, 2-2, 2-3, 2-4, 2-5, 2-6, 3-2, 3-6, 3-21, 3-22, 3-24, 3-26, 5-5, 7-2, 7-9, 7-10, 7-11, 7-12, 7-13, 8-7, 8-10
Orientation, 3-2, 3-21, 3-74, 4-79, 7-9, 7-11, 7-12
outdoor air, 2-23, 4-45, 4-46, 4-47, 4-50, 4-61, 4-66, 4-81, 4-82, 4-91, 4-93
overhang, 3-16, 3-23, 3-24

P

Performance Approach, 1-18, 4-85
permanently installed, 4-15, 4-18, 4-82, 4-93, 5-29, 6-1, 6-2, 6-16, 6-17, 6-19, 6-21, 6-22, 6-26, 6-32, 6-34, 6-35, 6-36, 6-40, 6-42, 6-43, 6-44, 6-45, 6-48, 8-23, 8-24, 8-38
pilot light, 3-66, 3-67, 3-68, 4-8, 4-86, 5-11, 5-12, 5-17, 8-19
pipe insulation, 1-6, 4-75, 5-3, 5-4, 5-6, 5-7, 5-8, 5-17, 5-21, 5-22, 5-23, 5-24, 5-27, 5-28
Plan Check, 1-26, 2-5, 3-28
plenum, 2-9, 4-14, 4-18, 4-19, 4-22, 4-23, 4-24, 4-30, 4-31, 4-33, 4-35, 4-38, 4-46, 4-47, 4-50, 4-66, 4-92, 8-23, 8-24, 8-31
process load, 5-7
pumps, 1-6, 4-10, 4-12, 4-17, 4-79, 4-82, 5-3, 5-4, 5-9, 5-12, 5-13, 5-14, 5-19, 5-25, 5-26, 5-30, 8-23

R

radiant heating system, 4-6
radiant heating systems, 4-6
rated wattage, 6-14, 6-15, 6-17, 6-18, 6-33
readily accessible, 2-23, 3-63, 3-66, 4-28, 4-53, 4-64, 6-26, 6-57

recirculating system, 5-6, 5-19, 5-20, 5-23, 5-25, 5-28
Recirculation System, 5-28, 5-29
recovery efficiency, 4-55, 5-5
reflectance, 3-3, 3-4, 3-5, 3-52, 3-53, 3-54, 3-55, 8-6, 8-7, 8-14, 8-15, 8-16
reflector lamp, 6-6, 6-10, 6-35, 6-37
refrigerant, 1-6, 1-18, 2-8, 2-9, 2-13, 2-30, 2-37, 4-1, 4-2, 4-12, 4-14, 4-15, 4-17, 4-19, 4-25, 4-74, 4-83, 4-87, 4-89, 4-91, 4-92, 4-93, 4-94, 4-95, 7-2, 7-5, 8-19, 8-20, 8-22, 8-23, 8-24, 8-38, 8-41, 8-42, 8-47, 8-48
Refrigerant Charge, 2-8, 2-13, 2-30, 4-1, 4-14, 4-89, 4-91, 4-92, 8-20, 8-22, 8-32
repair, 1-12, 4-18, 5-9, 8-2, 8-13, 8-17, 8-20, 8-29
reset, 4-79
residential, 1-1, 1-2, 1-3, 1-5, 1-7, 1-8, 1-9, 1-11, 1-12, 1-13, 1-14, 1-15, 1-16, 1-25, 2-1, 2-2, 3-4, 3-6, 3-7, 3-29, 3-43, 3-48, 3-49, 3-51, 3-52, 3-53, 3-63, 3-77, 4-8, 4-33, 4-66, 4-69, 4-74, 4-75, 4-77, 4-85, 5-5, 5-10, 5-12, 5-14, 5-24, 5-30, 6-1, 6-2, 6-3, 6-4, 6-5, 6-9, 6-10, 6-11, 6-13, 6-14, 6-17, 6-21, 6-22, 6-23, 6-24, 6-28, 6-32, 6-33, 6-34, 6-35, 6-37, 6-41, 6-45, 6-46, 6-47, 6-48, 6-49, 6-50, 6-51, 6-53, 6-54, 6-56, 6-62, 7-4, 7-7, 7-8, 8-4, 8-15, 8-31, 8-38
Roof, 1-6, 3-3, 3-4, 3-31, 3-33, 3-54, 3-55, 7-2, 8-7, 8-16
R-value, 1-18, 2-7, 2-9, 2-13, 3-30, 3-31, 3-34, 3-39, 3-40, 3-41, 3-43, 3-45, 3-51, 3-77, 3-78, 4-21, 4-28, 4-30, 4-31, 4-32, 4-79, 4-80, 4-90, 5-4, 5-27, 7-2, 7-5, 7-6

S

SEER, 2-16, 4-9, 4-10, 4-19, 4-82, 4-84, 4-87, 7-13, 8-41, 8-45, 8-47
service water heating, 5-10, 8-42
shading devices, 3-6, 3-20, 3-25, 3-28, 7-2, 7-5
SHGC, 1-18, 2-11, 2-12, 3-2, 3-3, 3-6, 3-7, 3-8, 3-9, 3-10, 3-11, 3-12, 3-13, 3-14, 3-15, 3-16, 3-17, 3-18, 3-19, 3-22, 3-23, 3-24, 3-25, 3-26, 3-28, 3-29, 3-74, 3-75, 3-76, 3-77, 3-78, 7-2, 7-5, 8-4, 8-5, 8-8, 8-9, 8-10, 8-11, 8-12, 8-13, 8-14, 8-42, 8-45, 8-50
skylight, 3-6, 3-13, 3-14, 3-15, 3-16, 3-21, 3-22, 3-49, 3-64, 4-64, 8-1, 8-13, 8-39
skylight well, 3-49
slab-on-grade floor, 4-79
SMACNA, 4-8
soffit, 3-35
solar energy, 3-3, 3-55, 5-10, 5-12, 8-6
solar gain, 1-3, 3-16, 3-18, 3-23, 3-26, 3-27, 3-60, 3-77
Solar heat gain coefficient, 3-78
solar heat gain coefficient (SHGC), 3-6
spa heater, 4-87, 5-12
standby losses, 5-1, 5-5
story, 1-7, 1-13, 1-14, 1-16, 2-18, 3-27, 3-39, 6-56, 7-7, 7-10
straw bales, 3-56
suction lines, 4-12, 5-30
supply fan, 4-46, 4-47, 4-61, 4-62
swimming pool, 1-1, 1-6, 5-12, 6-48, 6-49

T

task lighting, 6-41
Temperature Sensor, 4-40
thermal efficiency, 5-6
thermal mass, 1-17, 3-4, 3-55, 3-56, 3-60, 3-61, 3-62, 3-74, 7-6, 8-16
thermostat, 4-7, 4-18, 4-39, 4-40, 4-41, 4-53, 5-24, 5-25, 7-14, 8-19, 8-20, 8-28, 8-29
thermostat setback, 4-39, 4-40, 4-41, 4-54, 7-14, 8-20, 8-28, 8-29, 8-32
thermostat setpoint, 4-54, 5-30

time clock, 1-6, 6-2, 6-47, 6-49
Title 24, 1-1, 1-9, 1-10, 1-13, 1-24, 1-26, 2-13, 2-26, 3-30, 3-37, 3-53, 3-54, 4-24, 4-92, 6-3, 6-19, 6-22
track lighting, 6-17, 6-36, 6-39
transformer, 6-5, 6-7, 6-11, 6-14, 6-17, 6-31, 6-33, 6-39

U

U-factor, 1-18, 2-12, 3-2, 3-3, 3-6, 3-7, 3-8, 3-9, 3-10, 3-11, 3-12, 3-13, 3-14, 3-15, 3-16, 3-19, 3-22, 3-26, 3-28, 3-29, 3-31, 3-32, 3-33, 3-37, 3-38, 3-39, 3-40, 3-41, 3-43, 3-44, 3-45, 3-48, 3-49, 3-51, 3-52, 3-55, 3-56, 3-74, 3-75, 3-76, 3-77, 3-78, 4-80, 7-2, 7-4, 7-5, 8-4, 8-5, 8-8, 8-9, 8-10, 8-11, 8-12, 8-13, 8-14, 8-42, 8-45, 8-46, 8-50
U-factors, 1-18, 3-2, 3-3, 3-6, 3-8, 3-9, 3-11, 3-12, 3-15, 3-16, 3-28, 3-39, 3-43, 3-44, 3-49, 3-51, 3-52, 3-55, 3-56, 3-74, 3-77, 7-5, 8-13, 8-14, 8-45
unconditioned space, 1-11, 1-12, 3-47, 3-63, 4-21, 4-42, 4-59, 6-2, 6-55, 6-58, 7-6, 8-3, 8-11, 8-21, 8-22
Urea Formaldehyde, 3-30

V

Vapor Barrier, 3-1, 3-59, 3-72, 3-73
vapor retarder, 3-35
vent damper, 3-59, 4-8
ventilation, 1-6, 1-12, 2-23, 3-5, 3-27, 3-35, 3-43, 3-51, 3-59, 3-63, 3-64, 3-69, 3-71, 3-72, 3-74, 3-76, 4-1, 4-3, 4-43, 4-44, 4-45, 4-46, 4-47, 4-48, 4-49, 4-50, 4-51, 4-52, 4-53, 4-54, 4-55, 4-56, 4-57, 4-58, 4-59, 4-60, 4-61, 4-62, 4-64, 4-69, 4-70, 4-71, 4-72, 4-90, 7-3, 7-6, 8-7, 8-15, 8-18

W

Wall, 1-26, 3-38, 3-40, 3-41, 3-42, 3-50, 3-52, 3-73, 4-6, 6-38, 7-2, 8-8
Walls, 1-26, 3-39, 3-40, 3-55, 3-69
water heaters, 1-23, 4-77, 4-78, 5-1, 5-2, 5-5, 5-6, 5-8, 5-9, 5-11, 5-17, 5-18, 5-19, 5-21, 5-22, 5-24, 5-25, 5-26, 7-5, 7-6, 8-33, 8-34, 8-36

Appendix A Compliance Forms

Overview

This appendix includes blank copies of the Residential Compliance Forms. Compliance documentation is completed at the ***Building Permit Phase***, the ***Construction Phase***, and the ***Field Verification and/or Diagnostic Testing Phase***. The forms and documents submitted at each of these phases are described below.

Building Permit Phase Documentation

The Standards Section 10-103(a) requires that a certificate of compliance be included on the plans when the performance approach is used. If the performance approach is utilized for compliance, the CF-1R forms are produced by the compliance software. Thermal Mass and Solar Heat Gain Coefficient calculations are performed internally by the software.

Certificate of Compliance - Residential New Construction (CF-1R)

The CF-1R summarizes the minimum energy performance specifications needed for new construction compliance, including HVAC capacity and the results of the heating and cooling load calculations need to be to be attached. The Standards require that a certificate of compliance be included on the plans. CEC approved Performance ACM software automatically generates CF-1R forms, which vary in some respects from the prescriptive CF-1R forms.

Certificate of Compliance - Residential Addition (CF-1R-ADD)

The CF-1R-ADD summarizes the minimum energy performance specifications needed to demonstrate compliance for an addition to a dwelling, including HVAC capacity and the results of the heating and cooling load calculations which are required to be attached. The Standards require that a certificate of compliance be included on the plans. CEC approved performance ACM software automatically generates CF-1R forms, which vary is some respects from the prescriptive CF-1R forms.

Certificate of Compliance - Residential Alterations (CF-1R-ALT)

The CF-1R-ALT summarizes the minimum energy performance specifications needed for an alteration to an existing dwelling, including HVAC capacity and the results of the heating and cooling load calculations need to be attached. The Standards require that a certificate of compliance be included on the plans. CEC approved performance ACM software automatically generates CF-1R forms, which vary is some respects from the prescriptive CF-1R forms.

Mandatory Measures List (MF-1R)

This document is applicable for both prescriptive and performance compliance. This reference list needs to be part of the building plans to help builders and inspectors reference applicable mandatory measures in the Standards.

Solar Water Heating Calculation (CF-SR)

This form is used to calculate the percent of domestic water heating that is supplied by solar water heating. The form is used to either calculate the percent of solar contributed by tested solar system. All system or collector data must be based on the OG-300 test methods of the Solar Rating and Certification Corporation.

Thermal Mass Worksheet (WS-1R)

This worksheet is completed by the documentation author when complying with the prescriptive requirements of Package C.

Area Weighted Average Calculation Worksheet (WS-2R)

This worksheet is used to calculate weight-averaged U-factors for prescriptive envelope compliance.

Appendix A Compliance Forms

Solar Heat Gain Coefficient (SHGC) Worksheet (WS-3R)

This worksheet is completed by the documentation author when complying with the prescriptive requirements.

Construction Phase Documentation

Installation Certificate (CF-6R)

The CF-6R is now broken into categories; ENV, LTG and MECH. A set of documents applicable to the construction project is required to be assembled and posted at the building site. Different installing contractors are responsible for installing the water heating equipment, the windows (fenestration), the lighting system, the air distribution ducts and HVAC equipment, the measures that affect building envelope tightness, and the insulation.

Installation Certificate (CF-6R-HERS) Some installations are required to be Field verified by a third party HERS rater. These types of installations require that installers submit forms that certify certain performance or quality specifications have been met. These performance or quality specifications will be verified by a HERS rater.

Field Verification and/or Diagnostic Testing Documentation

Certificate of Field Verification and Diagnostic Testing (CF-4R)

This document is completed by the HERS rater when field verification and/or diagnostic testing is required. These documents include information about the measurements and tests that were performed. The HERS rater verifies that the requirements for compliance credit have been met. Copies of the CF-4R are required to be provided to the Builder, HERS Provider and Enforcement Agency for every home that utilizes HER verification for compliance.

2008 Residential Compliance Forms	*Length*
Certificate of Compliance	
CF-1R – Certificate of Compliance: Residential New Construction	4 Pages
CF-1R – ADD Certificate of Compliance: Residential Additions	4 Pages
CF-1R – ALT Certificate of Compliance: Residential Alterations	4 Pages
MF-1R – Mandatory Measures Summary: Residential	3 Pages
WS-1R – Thermal Mass Worksheet	1 Page
WS-2R – Area Weighted Average Calculation Worksheet	1 Page
WS-3R – Solar Heat Gain Coefficient (SHGC) Worksheet	2 Pages
Installation Certificate	
CF-6R-ENV-01 – Envelope – Insulation; Roofing; Fenestration	3 Pages
CF-6R-ENV-20-HERS – Building Envelope Sealing	3 Pages
CF-6R-ENV-21-HERS – Quality Insulation Installation (QII) - Framing Stage Checklist	2 Pages
CF-6R-ENV-22-HERS – Quality Insulation Installation (QII) - Insulation Stage Checklist	3 Pages
CF-6R-LTG-01 – Residential Lighting	3 Pages
CF-6R-MECH-01 – Domestic Hot Water (DHW)	2 Pages
CF-6R-MECH-02 – Solar Domestic Hot Water Systems (SDHW)	1 Page
CF-6R-MECH-03 – Pool And Spa Heating Systems	2 Pages
CF-6R-MECH-04 – Space Conditioning Systems, Ducts and Fans	2 Pages
CF-6R-MECH-05 – Indoor Air Quality and Mechanical Ventilation	5 Pages
CF-6R-MECH-06 – Evaporatively Cooled Condensing Units	2 Pages
CF-6R-MECH-07 – Evaporative Coolers	2 Pages
CF-6R-MECH-08 – Ice Storage Air Conditioning (ISAC) Units	2 Pages
CF-6R-MECH-20-HERS – Duct Leakage Test – Completely New or Replacement Duct System	2 Pages
CF-6R-MECH-21-HERS – Duct Leakage Test – Existing Duct System	2 Pages
CF-6R-MECH-22-HERS – HSPP/PSPP Installation; Cooling Coil Airflow & Fan Watt Draw Test	2 Pages

CF-6R-MECH-23-HERS – Verification of High EER Equipment	1 Page
CF-6R-MECH-24-HERS – TMAH; STMS; and CID	2 Pages
CF-6R-MECH-25-HERS – Refrigerant Charge Verification - Standard Measurement Procedure	2 Pages
CF-6R-MECH-26-HERS – Refrigerant Charge Verification - Alternate Measurement Procedure	1 Page
CF-6R-MECH-27-HERS – Maximum Rated Total Cooling Capacity	2 Pages
CF-6R-MECH-28-HERS – Low Leakage Air Handler Verification	1 Page
CF-6R-MECH-29-HERS – Supply Duct Compliance Credits - Location; Surface Area; R-value	2 Pages
Certificate of Field Verification and Diagnostic Testing	
CF-4R-ENV-20 – Building Envelope Sealing	1 Page
CF-4R-ENV-21 – Quality Insulation Installation (QII) - Framing Stage Checklist	2 Pages
CF-4R-ENV-22 – Quality Insulation Installation (QII) - Insulation Stage Checklist	3 Pages
CF-4R-MECH-20 – Duct Leakage Test – Completely New or Replacement Duct System	2 Pages
CF-4R-MECH-21 – Duct Leakage Test – Existing Duct System	2 Pages
CF-4R-MECH-22 – HSPP/PSPP Installation; Cooling Coil Airflow & Fan Watt Draw Test	2 Pages
CF-4R-MECH-23 – Verification of High EER Equipment	1 Page
CF-4R-MECH-24 – TMAH; STMS; and CID	2 Pages
CF-4R-MECH-25 – Refrigerant Charge Verification - Standard Measurement Procedure	4 Pages
CF-4R-MECH-26 – **********Not Used **********	N/A
CF-4R-MECH-27 – Maximum Rated Total Cooling Capacity	2 Pages
CF-4R-MECH-28 – Low Leakage Air Handler Verification	1 Page
CF-4R-MECH-29 – Supply Duct Compliance Credits - Location; Surface Area; R-value	2 Pages

Prescriptive Certificate of Compliance: Residential		**CF-1R**
Newly Constructed Buildings and Additions Greater Than 1,000 ft²		**(Page 1 of 5)**
Project Name:	**Climate Zone #**	**# of Stories**

General Information		
Site Address:	**Enforcement Agency:**	**Date:**
Building Type ☐ Single Family ☐ Multi Family	Conditioned Floor Area[1] (CFA):	
Circle the Front Orientation: N, E, S, W, or Degrees_____	Project Type: ☐ New Building Construction ☐ New Addition[1] greater than 1,000 ft² *1. Additions greater than 1,000 ft² must comply with Component Package D.*	
Component Package: (Check one) _____ C _____ D _____ E (_____ E Alternative) in Climate zone 1 and 16 only. See footnotes to Table 151-D for alternative optional requirements.		

Insulation Values For Opaque Surfaces *(for Furring use the Mass and Furring Strips Construction table below)*

A	B	C	D	E	F	G	H	I	J
Standard Assembly See Note and 1-3				**Proposed** Values From JA4 Table[4-8]					
Frame, Assembly, Size, Type[1]	Spacing, Thickness or Other[2]	Standard R-value[3]	Equivalent U-factor[4]	JA4 Table Ref.[5]	JA4 Table Ref.[5]	Framed Cavity R-Value	Continuous Insulation R-Value[7]	Cell: Row and Column	Proposed Assembly U-factor[8,9] or (R-value from Column JJ)

Note: For furred assemblies, accounting for Continuous Insulation R-value, see Page JA4-3 and Equation 4-1. For calculating furred walls use the Mass and Furring Construction table below.

1. Frame, Assembly, Size, Type***: Frame** type **Assembly** Type: Indicate Roof/Ceiling, Walls, or Floors/Slabs/Crawl Space, Doors and **Size**: Indicate Wood, Metal, Metal Buildings, Mass, and Nominal Framing Size 2x4, 2x6, or CMU Thickness, etc… see JA4-1 for other Frame Types. Type**:** For Masonry enter CMU -LW, MW, LW; Clay Brick or Concrete*

2. ***Spacing:*** *Either 16"or 24"OC;* ***Thickness:*** *For Unit Masonry Wall; Property includes- U-factor, C-factor, or Heat Capacity (**HC**); or other JA4 descriptive term of the assembly. Reference the Appropriate Table- 4.3.5 through 4.3.7.*

*3. Enter the **Standard** U-factor from Table 143-A, B or C for each different As**sembly Typ**e. Enter R-value for mass enter and raised floors.*

4. The equivalent U-factor is from the JA4 tables assuming R-0 Continuous Insulation.

5. List the JA4 table references to match Column.

6.-7. List the R-value if frame walls are used. Otherwise enter N/A (not applicable). Enter the Continuous Insulation R-value for the proposed assembly.

*8. The Proposed Assembly U-factor, Column J, must be equal to or less than the **Standard** U-factor in Column D to comply.*

9.For Mass-Furring only, use the table below to calculate the effects of furring on mass., Use the Final Assembly R-value from Column JJ below and enter it in Column J. The Proposed R-value must be greater than the Standard R-value in Column D to comply.

Mass and Furring Strips Construction

AA	BB	CC	DD	EE	FF	GG	HH	II	JJ	KK	LL
				Added Interior or Exterior Insulation in Furring cavity Space from Reference Joint Appendix JA4 Table 4.3.13							
Frame Type & Thickness[1]	Assembly Type	From Reference Joint Appendix JA4 Tables/ Row & Column	U-Factor[2]	Row & Column	Frame Thickness	Frame Type Wood/Metal	Furring Cavity R-value[3]	Calculated R-value[4]	Final Assembly R-Value[5]	Final Assembly U-factor[6,7]	Comment

Project Name:	**Climate Zone #**	**# of Stories**

Mass and Furring Strips Construction (footnotes)

1. Indicate the type of assembly to include; Hollow Unit Masonry Walls, Solid Unit Masonry, Solid Concrete Walls, Etc. Additional assemblies can be found Reference Joint Appendix JA4.
2. This is the U-Factor based on the thickness of the assembly in inches.
3. The R-value of the insulation to be added on the interior or exterior of the assembly.
4. The Calculated R-Value is the R-value of the furred out section of the assembly.
5.-6.The Final Assembly is calculated using Equation 4-2 or Equation 4-4of the Reference Joint Appendix JA4. The equation is the inverse of Column D added to Column I. Column K is the inverse from column J.
7. Insert the calculated U-factor value on to the Opaque Surface Details in Column J

FENESTRATION: PROPOSED AREAS

Fenestration Type (Window, Glass Door or Skylight)	Orientation (North, East, South, West)	Proposed Area[1] (ft^2)	Maximum Allowed U-factor[2, 3]	Maximum Allowed SHGC[2, 3, 4]	NFRC or Default Values[5]
	Total				

1. *Fenestration area is the area of total glazed product (i.e. glass plus frame). Exception: When a door is less than 50% glass, the fenestration area may be the glass area plus a 2" "frame" around the glass.*
2. *Enter value from Component Package Requirements from either Table 151-B, 151-C, or 151-D.*
3. *Actual fenestration efficiencies installed shall be indicated on the installation form, CF-6R-ENV. The efficiencies should be equivalent to or less than that listed on the CF-1R Form Page 1. Otherwise, revise the CF-1R and resubmit for plan check review.*
4. *Submit a completed WS-3R Form if a reduced SHGC is calculated with exterior shading.*
5. *If applicable at this stage enter "NFRC" Certified windows or are CEC "Default" values found in Table 116-A or B.*

FENESTRATION PROPOSED AREA CALCULATION

	CFA ft^2	**Allowed %** of CFA	**Allowed Area** (CFA x Allowed %)	**Total Proposed Area** (From Table Above)
Total Fenestration Area[1]				
West Fenestration Area[2] (Required only in Climate Zones 2, 4 & 7 -15)		.05		
		Total Area[3]		≥

1. *For Component Package C, see Table 151-B for Climate Zone Maximum Total Area Allowance. Enter 20% for all other Component Packages.*
2. *The Proposed West Fenestration Area includes west-sloping skylights and any skylights with a pitch less than 1:12.*
3. *To meet energy compliance the Total Proposed Area must be less than or equal to the Allowed Area.*

Project Name:	**Climate Zone #**	**# of Stories**

ROOFING PRODUCTS (COOL ROOFS) *§151(f)12*

Check applicable box below if the newly installed roof is exempted from the roofing product "Cool Roof" requirements. Note: If any one of the boxes are checked below, the Aged Solar Reflectance and Thermal Emittance requirements for roofing products in §118(i) are not applicable. Do not fill table below.

☐ Roofing compliance Not Required in Climate Zones 1-12, 14, and 16 with a Low Slope. Less or 2:12 pitch.
☐ Roofing compliance Not Required in Climate Zones 1 through 9 and 16 with a Low-Sloped. 2:12 pitch or less.

☐ Roofing area covered by building integrated; photovoltaic panels and solar thermal panels are exempt from the above Cool Roof criteria
☐ Roof constructions that have thermal mass over the roof membrane with at least 25 lb/ft² is exempt from the above Cool Roof criteria.

Note: If no CRRC-1 label is available, this compliance method cannot be used, use the Performance Approach to show compliance, otherwise, Check the applicable box below if Exempt from the Roofing Products "Cool Roof" Requirement:

CRRC Product ID Number[1]	Roof Slope ≤ 2:12	Roof Slope > 2:12	Product Weight < 5lb/ft²	Product Weight ≥ 5lb/ft²	Product Type[2]	Aged Solar Reflectance[3,4]		Thermal Emmitance	SRI[5]
	☐	☐	☐	☐		☐[4]			
	☐	☐	☐	☐		☐[4]			
	☐	☐	☐	☐		☐[4]			
	☐	☐	☐	☐		☐[4]			

1. The CRRC Product ID Number can be obtained from the Cool Roof Rating Council's Rated Product Directory at www.coolroofs.org/products/search.php
2. Indicate the type of product is being used for the roof top, i.e. single-ply roof, asphalt roof, metal roof, etc.
3. If the Aged Reflectance is not available in the Cool Roof Rating Council's Rated Product Directory then use the Initial Reflectance value from the same directory and use the equation $(0.2+0.7(\rho_{initial} - 0.2)$ to obtain a calculated aged value. Where ρ is the Initial Solar Reflectance.
4. Check box if the Aged Reflectance is a calculated value using the equation above.
5. The SRI value needs to be calculated from a spredsheet at http://www.energy.ca.gov/title24/

To apply **Liquid Field Applied Coatings,** the coating must be applied across the entire roof surface and meet the dry mil thickness or coverage recommended by the coatings manufacturer and meet minimum performance requirements listed in §118(i)4. Select the applicable coating:

☐ Aluminum-Pigmented Asphalt Roof Coating	☐ Cement-Based Roof Coating	☐ Other _____

HVAC SYSTEMS - HEATING

Heating Equipment Type and Capacity[1, 2, 3]	Minimum Efficiency (AFUE or HSPF)	Distribution Type and Location (Ducts, Hydronic in Floor, Radiators, etc.)	Duct or Piping Insulation R-Value[4]	Thermostat Type	Configuration (Central, Space, Package or Hydronic)

1. Indicate (Central Furnace, Wall Furnace, Heat pump, Boiler, Electric Resistance, Hydronic, etc.)
2. Electric resistance heating is allowed only in Component Package C, or except where electric heating is supplemental (i.e., if total capacity ≤ 2 KW or 7,000 Btu/hr electric heating is controlled by a time-limiting device not exceeding 30 minutes). See §151(b)3 exception.
3. Refer to the HERS Verification section on Pages 3 and 4 of the CF-1R Form for additional requirements and check applicable boxes.
4. Pipe insulation for steam hydronic heating systems or hot water systems >15 psig use Table 123-A, otherwise use Table150-B.

Project Name:	**Climate Zone #**	**# of Stories**

HVAC SYSTEMS - COOLING

Cooling Equipment Type and Capacity[1, 2]	Minimum Efficiency (SEER/EER or COP)	Distribution Type and Location (Central Ducts, Hydronic in Floor, Radiators, etc.)	Duct or Piping Insulation R-Value	Thermostat Type	Configuration (Split or Package)

1. Indicate Type (A/C, Heat pump, Evaporative Cooling, etc)
2. Refer to the HERS Verification section on Pages 3 and 4 of the CF-1R Form for additional requirements and check applicable boxes.

WATER HEATING

List water heaters and boilers for both domestic hot water (DHW) heaters and hydronic space heating. Individual dwelling DHW heaters must be gas or propane fired and may not use recirculation pumps. Hot water pipe insulation from the DHW heater to the kitchen(s) and on all underground hot water pipes is required in all component packages in all climate zones.

Water Heater Type/Fuel Type[1, 2]	Distribution Type (Standard, Recirculating)[1]	Number In System	Tank Capacity (Gallons)	Energy Factor or Thermal Efficiency	External Tank Insulation R-Value[3]

1. Indicate Type (Storage Gas, Heat Pump, Instantaneous, etc)
2. Recirculating systems serving multiple dwelling units shall meet the recirculation requirements of §150(n). The Prescriptive requirements do not allow the installation of a recirculating water heating system for single dwelling units.
3. The water heating tank and pipes shall be insulated to meet the requirements of §150(j). 2.

SPECIAL FEATURES

The enforcement agency should pay special attention to the Special Features specified in this checklist below. These items may require written justification and documentation and special verification.

Radiant Barrier (Roof) ☐ **YES** ☐ **NO**
YES: Required in Climate Zones 2, 4, and 8-15 in Component Packages C, D and E.

Slab Edge (Perimeter) Insulation ☐ **YES** ☐ **NO**
YES: In all Climate Zones using Component Package C, and in Climate Zone 16 under Component Packages D and E, R-7 insulation is required.

Heated Slab Insulation ☐ **YES** ☐ **NO**
YES: Slab edge insulation required for heated slabs in all Component Packages in all Climate Zones. See details in Table 118-A of the standards.

Raised Slab Insulation ☐ **YES** ☐ **NO**
YES: In Climate Zones 1, 2, 11, 13, 14 & 16 R-8 insulation is required, and in Climate Zones 12 & 15 R-4 insulation is required under Component Packages D and E. Raised slab insulation is not required in Component Package C.

Thermal Mass ☐ **YES** ☐ **NO**
YES: In Component Package C for all Climate Zones, a Minimum Interior Mass Capacity (IMC) must be achieved per Table 151-A of the standards. If Yes, submit a completed WS-1R Form.

HERS VERIFICATION SUMMARY

The enforcement agency should pay special attention to the HERS Measures specified in this checklist below. A completed and signed CF-4R Form for all the measures specified shall be submitted to the building inspector before final inspection.

Duct Sealing & Testing ☐ **YES** ☐ **NO**
YES: New ducted systems are to be sealed and duct leakage shall be less than 6% **per** §151(f)10 in all Component Packages in all Climate Zones.
HERS verification is required for this measure.

Refrigerant Charge - Split System ☐ **YES** ☐ **NO**
YES: In Climate Zones 2 and 8-15 in all Component Packages, when a newly ducted split A/C or heat pump is installed, a refrigerant charge measurement shall be verified per §151(f)7A.
HERS verification is required for this measure.

Registration Number: _____ *Registration Date/Time:* _____ *HERS Provider:* _____

Project Name:	**Climate Zone #**	**# of Stories**

Central Forced Air Handlers: Integrated Ventilation System Watt Draw ☐ **YES** ☐ **NO**

YES: In all Component Packages and in all Climate Zones, when a central fan integrated ventilation system is installed to meet the ventilation requirements of §150(o), the central forced air system fans must draw less than 0.58 watts per CFM per §151(f)11.
HERS verification is required for this measure.

Ducted Split Central Air Conditioners and Heat Pumps: Airflow and Watt Draw ☐ **YES** ☐ **NO**

YES: In all Component Packages in Climate Zones 10 through 15, when a newly ducted split A/C or heat pump system is installed, the airflow and fan watt draw shall be verified per §151(f)7B.
HERS verification is required for this measure.

Documentation Author's Declaration Statement

- **I certify that this Certificate of Compliance documentation is accurate and complete.**

Name:	Signature:
Company:	Date:
Address:	If Applicable ☐ CEA or ☐ CEPE (Certification #):
City/State/Zip:	Phone:

Responsible Building Designer's Declaration Statement

- I am eligible under Division 3 of the California Business and Professions Code to accept responsibility for the building design identified on this Certificate of Compliance.
- I certify that the energy features and performance specifications for the building design identified on this Certificate of Compliance conform to the requirements of Title 24, Parts 1 and 6 of the California Code of Regulations.
- The building design features identified on this Certificate of Compliance are consistent with the information provided to document this building design on the other applicable compliance forms, worksheets, calculations, plans and specifications submitted to the enforcement agency for approval with this building permit application.

Name:	Signature:
Company:	Date:
Address:	License:
City/State/Zip:	Phone:

For assistance or questions regarding the Energy Standards, contact the Energy Hotline at: 1-800-772-3300.

Prescriptive Certificate of Compliance:		**CF-1R ADD**
Residential *Additions*		**(Page 1 of 5)**
Site Address:	**Enforcement Agency:**	**Date:**

General Information		
Project Name	Climate Zone #	# of Stories
Building Type ☐ Single Family ☐ Multi Family	Circle the Front Orientation: N, E, S, W or Degrees _____	
Conditioned Floor Area of Addition (CFA):	**New Addition Size:** ☐ Less than or equal to 100 ft^2 ☐ Less than or equal to 1000 ft^2 *(Do not use this form for additions greater than 1000 ft^2)*	

NOTE: For Alterations to an existing home, submit a completed CF-1R-ALT Form.
Exception: Existing HVAC systems that are replaced or altered to serve the addition may be included on the CF-1R -ADD Form.

Prescriptive Envelope Requirements for Additions

Option 1: Use Option 1for standard wood and assemblies meeting the **Cavity R-value only**. For all other use Option 2.

- *For 100 ft^2 additions; the Proposed values must be equal or greater than the Standard column or when indicated when using Package D, "Pkg D". Enter all values in the Proposed Columns.*
- *For less than 1,000 ft^2 additions must comply with "Pkg D" requirements unless indicated in the Standard Column. To meet "Pkg D" minimum energy compliance requirements, see RCM Appendix B, Table 151-C. Or §151(b) in the RCM. Enter all values in the Proposed Columns.*

Size of Addition	**100 ft^2 or less**					**Less than 1,000 ft^2**				
Component	**Standard**		**Proposed**		**Comment**	**Standard**		**Proposed**		**Comment**
Ceiling Insulation	R-19				Minimum	Pkg D				Table 151-C
Wall Insulation	R-13				Minimum	R-13				Minimum
Floor Insulation	R-13				Minimum	Pkg D				Table 151-C
Fenestration	**U-factor**	**SHGC**	**U-factor**	**SHGC**	Enter Proposed values then **Skip Over** *To Roofing Products* Below	**U-factor**	**SHGC**	**U-factor**	**SHGC**	**Fill out** *Fenestration Proposed Areas* Below
	0.40	Pkg D				0.40	Pkg D			
Maximum Glazing Area	50 ft^2		ft^2			**Package D (20% of CFA) + Glass Removed**		ft^2		**Fill out** *Additional Allowed Fenestration Areas* Below
Radiant Barrier	N/A					Pkg D		Table 151-C		
Roofing	Pkg D		See Roofing Products Below			Pkg D		See Roofing Products Below		

Option 2: Use this option for all other assemblies such as, wood, metal, or mass assemblies. For furred mass walls an additional calculation is required using the ***Mass and Furring Strips Construction*** table below. Use Page JA4-1 in the Reference Joint Appendices for a listing of different assemblies.

Insulation Values For Opaque Surfaces *(for Furring use the Mass and Furring Strips Construction table below)*

A	B	C	D	E	F	G	H	I	J
Standard Assembly See Note and 1-3				**Proposed** Values From JA4 Table[4-8]					
Frame, Assembly, Size, Type[1]	Spacing, Thickness or Other[2]	Standard R-value[3]	Equivalent U-factor[4]	JA4 Table Ref.[5]	JA4 Table Ref.[5]	Framed Cavity R-Value	Continuous Insulation R-Value[7]	Cell: Row and Column	Proposed Assembly U-factor[8,9] or (R-value from Column JJ)

Note: For furred assemblies, accounting for Continuous Insulation R-value, see Page JA4-3 and Equation 4-1. For calculating furred walls use the Mass and Furring Construction table below.

Site Address:	**Enforcement Agency:**	**Date:**

*1. Frame, Assembly, Size, Type**: Frame** type **Assembly** Type: Indicate Roof/Ceiling, Walls, or Floors/Slabs/Crawl Space, Doors and **Size**: Indicate Wood, Metal, Metal Buildings, Mass, and Nominal Framing Size 2x4, 2x6, or CMU Thickness, etc… see JA4-1 for other Frame Types. Type**:** For Masonry enter CMU -LW, MW, LW; Clay Brick or Concrete*
*2. **Spacing:** Either 16"or 24"OC; **Thickness:** For Unit Masonry Wall; Property includes- U-factor, C-factor, or Heat Capacity (**HC**); or other JA4 descriptive term of the assembly. Reference the Appropriate Table- 4.3.5 through 4.3.7.*
*3. Enter the **Standard** U-factor from Table 143-A, B or C for each different As**sembly Typ**e. Enter R-value for mass enter and raised floors.*
4. The equivalent U-factor is from the JA4 tables assuming R-0 Continuous Insulation.
5. List the JA4 table references to match Column.
6.-7. List the R-value if frame walls are used. Otherwise enter N/A (not applicable). Enter the Continuous Insulation R-value for the proposed assembly.
*8. The Proposed Assembly U-factor, Column J, must be equal to or less than the **Standard** U-factor in Column D to comply.*
9.For Mass-Furring only, use the table below to calculate the effects of furring on mass., Use the Final Assembly R-value from Column JJ below and enter it in Column J. The Proposed R-value must be greater than the Standard R-value in Column D to comply.

Mass and Furring Strips Construction

AA	BB	CC	DD	EE	FF	GG	HH	II	JJ	KK	LL
				Added Interior or Exterior Insulation in Furring Space from Reference Joint Appendix Table 4.3.13							
Frame Type & Thickness[1]	Assembly Type	From Reference Joint Appendix JA4 Tables/ Row & Column	U-Factor[2]	Row & Column	Frame Thickness	Frame Type Wood/Metal	Furring Cavity R-value[3]	Calculated R-value[4]	Final Assembly R-Value[5]	Final Assembly U-factor[6,7]	Comment

Mass and Furring Strips Construction (footnotes)

1. Indicate the type of assembly to include; Hollow Unit Masonry Walls, Solid Unit Masonry, Solid Concrete Walls, Etc. Additional assemblies can be found Reference Joint Appendix JA4.
2. This is the U-Factor based on the thickness of the assembly in inches.
3. The R-value of the insulation to be added on the interior or exterior of the assembly.
4. The Calculated R-Value is the R-value of the furred out section of the assembly.
5.-6.The Final Assembly is calculated using Equation 4-2 or Equation 4-4of the Reference Joint Appendix JA4. The equation is the inverse of Column DD added to Column II. Column KK is the inverse from column JJ.
7. Insert the calculated U-factor value on to the Opaque Surface Details in Column J above table.

FENESTRATION PROPOSED AREAS

Fenestration Type (Window, Glass Door or Skylight)	Orientation (North, East, South, West)	PropsedArea[1] (ft^2)	Maximum U-factor[2, 3]	Maximum SHGC[2, 3, 4]	NFRC or Default Values[5]
	Total				

Site Address:	**Enforcement Agency:**	**Date:**

1. Fenestration area is the area of total glazed product (i.e. glass plus frame). Exception: When a door is less than 50% glass, the fenestration area may be the glass area plus a "2 inch frame" around the glass.
2. Enter value from Component Package D Requirements in Table 151-C.
3. Actual fenestration products installed and as indicated in CF-6R-ENV Form shall be equivalent to or have a lower U-factor and/or a lower SHGC value than that specified on the CF-1R Form.
4. Submit a completed WS-3R Form if a reduced SHGC is calculated with exterior shading.
3. If applicable at this stage enter "NFRC" for NFRC Certified windows or CEC "Default" values found in Table 116-A or B.

ADDITION ALLOWED FENESTRATION AREAS

	A	B	C	D	E		F
	CFA of Addition ft^2	Allowed % of CFA	Allowed Area (A x B)	Area Removed[2] ft^2	Total Area Allowed (C + D)		Proposed Area[3, 4] (Table Above)
Total Fenestration Area						≥	
West Fenestration Area[1] (Required In ClZs 2, 4 & 7 -15)		.05				≥	

1. West Fenestration Area includes west-sloping skylights and any skylights with a pitch less than 1:12.
2. West facing glazing area removed cannot be "counted" twice." In order to distribute the west glazing area removed to the other orientations, input the west glazing area removed in the Total Fenestration Area row, column D.
3. Include the Proposed Area of the West facing fenestration in both Area columns below.
4. To meet compliance, the Proposed Area must be less than or equal to the Total Allowed Area for BOTH the Total and West Fenestration Areas.

ROOFING PRODUCTS (COOL ROOFS) *§151(f)12*

Check applicable box below if the roof addition is exempt from the roofing product "Cool Roof" requirements. Note: If any one of the boxes are checked below, the Aged Solar Reflectance and Thermal Emittance requirements for roofing products in §118(i) are not applicable. Do not fill table below.

☐ Roofing compliance Not Required in Climate Zones 1-12, 14, and 16 with a Low Slope. Less or 2:12 pitch.
☐ Roofing compliance Not Required in Climate Zones 1 through 9 and 16 with a Low-Sloped. 2:12 pitch or less.

☐ Roofing area covered by building integrated; photovoltaic panels and solar thermal panels are exempt from the above Cool Roof criteria
☐ Roof constructions that have thermal mass over the roof membrane with at least 25 lb/ft^2 is exempt from the above Cool Roof criteria.

Note: If no CRRC-1 label is available, this compliance method cannot be used, use the Performance Approach to show compliance, otherwise, Check the applicable box below if Exempt from the Roofing Products "Cool Roof" Requirement:

CRRC Product ID Number[1]	Roof Slope ≤ 2:12	Roof Slope > 2:12	Product Weight < $5lb/ft^2$	Product Weight ≥ $5lb/ft^2$	Product Type[2]	Aged Solar Reflectance[3,4]		Thermal Emmitance	SRI[5]
	☐	☐	☐	☐		☐[4]			
	☐	☐	☐	☐		☐[4]			
	☐	☐	☐	☐		☐[4]			
	☐	☐	☐	☐		☐[4]			

1. The CRRC Product ID Number can be obtained from the Cool Roof Rating Council's Rated Product Directory at www.coolroofs.org/products/search.php
2. Indicate the type of product is being used for the roof top, i.e. single-ply roof, asphalt roof, metal roof, etc.
3. If the Aged Reflectance is not available in the Cool Roof Rating Council's Rated Product Directory then use the Initial Reflectance value from the same directory and use the equation $(0.2+0.7(\rho_{initial} - 0.2)$ to obtain a calculated aged value. Where ρ is the Initial Solar Reflectance.
4. Check box if the Aged Reflectance is a calculated value using the equation above.
5. The SRI value needs to be calculated from a spredsheet at http://www.energy.ca.gov/title24/

To apply **Liquid Field Applied Coatings,** the coating must be applied across the entire roof surface and meet the dry mil thickness or coverage recommended by the coatings manufacturer and meet minimum performance requirements listed in §118(i)4. Select the applicable coating:

☐ Aluminum-Pigmented Asphalt Roof Coating	☐ Cement-Based Roof Coating	☐ Other _____

Site Address:	**Enforcement Agency:**	**Date:**

HVAC SYSTEMS - HEATING

Heating Equipment Type and Capacity[1, 2, 3]	Minimum Efficiency (AFUE or HSPF)	Distribution Type and Location (Ducts, Hydronic in Floor, Radiators, etc.)	Duct or Piping Insulation R-Value	Thermostat Type	Configuration (Split or Package)

1. Indicate Type (Central Furnace, Wall Furnace, Heat pump, Boiler, Electric Resistance, etc.)
2. Electric resistance heating is allowed only when electric heating is supplemental (i.e., if total capacity ≤ 2 KW and electric heating is controlled by a time-limiting device not exceeding 60 minutes).
3. Refer to the HERS Verification section on Pages 3 and 4 of the CF-1R-ADD Form for additional requirements and check applicable boxes.

HVAC SYSTEMS - COOLING

Cooling Equipment Type and Capacity (A/C, Heat pump, Evap. cooling)[1]	Minimum Efficiency (SEER/EER or COP)	Distribution Type and Location (Ducts, Hydronic in Floor, Radiators, etc.))	Duct or Piping Insulation R-Value	Thermostat Type	Configuration (split or package)

1: Refer to the HERS Verification section on Pages 3 and 4 of the CF-1R-ADD Form for additional requirements and check applicable boxes.

WATER HEATING

List water heaters and boilers for both domestic hot water (DHW) heaters and hydronic space heating. Individual dwelling DHW heaters must be gas or propane fired, and may not exceed 50 gallons. Hot water pipe insulation from the DHW heater to the kitchen(s) and on all underground hot water pipes is required in all component packages in all climate zones.

Water Heater Type/Fuel (Storage Gas, Heat Pump, Instantaneous, etc.)	Distribution Type (Standard, Recirculating)[1]	Number In System	Tank Capacity (gal)	Energy Factor or Thermal Efficiency	External Tank Insulation R-Value[2]

1. *Recirculating systems serving multiple dwelling units shall meet the recirculation requirements of §150(n). The Prescriptive requirements do not allow the installation of a recirculating water heating system for single dwelling units.*
2. *The water heating tank and pipes shall be insulated to meet the requirements of §150(j).*

SPECIAL FEATURES The enforcement agency should pay special attention to the Special Features specified in this checklist below. These items may require written justification and documentation and special verification.

Radiant Barrier (Roof) ☐ **YES** ☐ **NO**
YES: Required in Climate Zones 2, 4, and 8-15 for additions larger than 100ft^2.

Slab Edge (Perimeter) Insulation ☐ **YES** ☐ **NO**
YES: In Climate Zone 16 under Component Package D, R-7 insulation is required.

Heated Slab Insulation ☐ **YES** ☐ **NO**
YES: Slab edge insulation required for heated slabs in all Climate Zones. See details in Table 118-A of the standards.

Raised Slab Insulation ☐ **YES** ☐ **NO**
YES: In Climate Zones 1, 2, 11, 13, 14 & 16 R-8 insulation is required, and in Climate Zones 12 & 15 R-4 insulation is required under Component Package D.

Thermal Mass - To obtain Compliance Credit for the installation of thermal mass, use the Performance Approach.

HERS VERIFICATION SUMMARY - The enforcement agency should pay special attention to the HERS Measures specified in this checklist below. A completed and signed CF-4R Form for all the measures specified shall be submitted to the building inspector before final inspection.

Registration Number: _____ *Registration Date/Time:* _____ *HERS Provider:* _____

Site Address:	**Enforcement Agency:**	**Date:**

Duct Sealing & Testing *HERS verification is required for this measure.*

☐ **YES** ☐ **NO YES**: In all Climate Zones, if a new space-conditioning system connected to an entirely new duct system is installed to serve the addition alone, the ducts are to be sealed and tested per §151(f)10.

☐ **YES** ☐ **NO YES**: In Climate Zones 2 and 9-16, if more than 40 linear feet of new or replacement ducts are installed in unconditioned space to serve the addition, the ducts are to be sealed and tested per §152(b)1D.

☐ **EXECPTION: Existing duct systems that are extended, which are constructed, insulated or sealed with asbestos.**

☐ **YES** ☐ **NO YES**: In Climate Zones 2 and 9-16, if the existing HVAC unit is replaced and will serve the addition, the ducts are to be sealed and tested per §152(b)1E.

☐ **EXCEPTION: Duct systems that are documented to have been previously sealed confirmed through HERS verification in accordance with procedures in the Reference Residential Appendix RA3.**

☐ **EXCEPTION: Duct systems with less than 40 linear feet in unconditioned space.**

☐ **EXCEPTION: Existing duct systems constructed, insulated or sealed with asbestos.**

Refrigerant Charge - Split System *HERS verification is required for this measure.*

☐ **YES** ☐ **NO YES**: In Climate Zones 2 and 8-15 in all Component Packages, if a newly ducted split A/C or heat pump is installed to serve the addition alone, a refrigerant charge measurement shall be verified per §151(f)7A.

☐ **YES** ☐ **NO YES**: In Climate Zones 2 and 8-15 in all Component Packages, if the existing ducted split A/C or heat pump is replaced and will serve the addition, a refrigerant charge shall be verified per §152(b)1F.

Central Fan Integrated Ventilation System – Airflow and Fan Watt Draw

The ventilation requirements of §150(o) do not apply to additions 1,000 ft^2 or less.

Ducted Split Systems - Air Conditioners and Heat Pumps: Airflow and Fan Watt Draw *HERS verification is required for this measure.*

☐ **YES** ☐ **NO YES**: In all Component Packages in Climate Zones 10 through 15, if a newly ducted split A/C or heat pump system is installed to serve the addition alone, the airflow and fan watt draw shall be verified per §151(f)7B.

☐ **YES** ☐ **NO YES**: In all Component Packages in Climate Zones 10 through 15, if the existing ducted split A/C or heat pump system is replaced and will serve the addition, the airflow and fan watt draw shall be verified per §152(b)1F.

Documentation Author's Declaration Statement

- **I certify that this Certificate of Compliance documentation is accurate and complete.**

Name:	Signature:
Company:	Date:
Address:	If Applicable ☐ CEA or ☐ CEPE (Certification #):
City/State/Zip:	Phone:

Responsible Building Designer's Declaration Statement

- I am eligible under Division 3 of the California Business and Professions Code to accept responsibility for the building design identified on this Certificate of Compliance.
- I certify that the energy features and performance specifications for the building design identified on this Certificate of Compliance conform to the requirements of Title 24, Parts 1 and 6 of the California Code of Regulations.
- The building design features identified on this Certificate of Compliance are consistent with the information provided to document this building design on the other applicable compliance forms, worksheets, calculations, plans and specifications submitted to the enforcement agency for approval with this building permit application.

Name:	Signature:
Company:	Date:
Address:	License:
City/State/Zip:	Phone:

For assistance or questions regarding the Energy Standards, contact the Energy Hotline at: 1-800-772-3300.

Registration Number: _____ *Registration Date/Time:* _____ *HERS Provider:* _____

Prescriptive Certificate of Compliance: Residential		**CF-1R-ALT**
Residential Alterations		**(Page 1 of 5)**
Project Name:	**Climate Zone #**	**# of Stories**

General Information		
Site Address:	**Enforcement Agency:**	**Date:**
Building Type ☐ Single Family ☐ Multi Family	Circle the Front Orientation: N, E, S, W, or degrees _____	
Conditioned Floor Area of Altered Space (CFA): _____	Project Type: ☐ Alterations ☐ Envelope ☐ Fenestration ☐ Roof ☐ HVAC Replacement or Change Out ☐ Duct Replacement ☐ Water Heater	

NOTE: This form is not to be used for Newly Constructed Buildings or Additions

Insulation Values For Opaque Surfaces *(for Furring use the Mass and Furring Strips Construction table below)*

Assembly Alteration

☐ **Opening of framed cavity alone** – *Alterations that involve the opening of the framed cavity of a wall, ceiling, or floor must install the mandatory minimum insulation value per §150 for the altered assembly. Fill in Columns 1-3 and 5only.*

☐ **Replacement of entire assembly** – *Replacement of an entire wall, ceiling, or floor assembly requires the installation of Component Package- D insulation values in Table 151-C. Fill in Columns 1-13. If not a mass wall skip column 4.*

A	B	C	D	E	F	G	H	I	J
Standard Assembly See Note and 1-3				**Proposed** Values From JA4 Table[4-8]					
Frame, Assembly, Size, Type[1]	Spacing, Thickness or Other[2]	Standard R-value[3]	Equivalent U-factor[4]	JA4 Table Ref.[5]	JA4 Table Ref.[5]	Framed Cavity R-Value	Continuous Insulation R-Value[7]	Cell: Row and Column	Proposed Assembly U-factor[8,9]

Note: For furred assemblies, accounting for Continuous Insulation R-value, see Page JA4-3 and Equation 4-1. For calculating furred walls use the Mass and Furring Construction table below.

*1. Frame, Assembly, Size, Type: **Frame** type **Assembly** Type: Indicate Roof/Ceiling, Walls, or Floors/Slabs/Crawl Space, Doors and **Size**: Indicate Wood, Metal, Metal Buildings, Mass, and Nominal Framing Size 2x4, 2x6, or CMU Thickness, etc… see JA4-1 for other Frame Types. Type: For Masonry enter CMU -LW, MW, LW; Clay Brick or Concrete*

*2. **Spacing:** Either 16"or 24"OC; **Thickness:** For Unit Masonry Wall; Property includes- U-factor, C-factor, or Heat Capacity (**HC**); or other JA4 descriptive term of the assembly. Reference the Appropriate Table- 4.3.5 through 4.3.7.*

*3. Enter the **Standard** U-factor from Table 143-A, B or C for each different As**sembly Typ**e. Enter R-value for mass enter and raised floors.*

4. The equivalent U-factor is from the JA4 tables assuming R-0 Continuous Insulation.

5. List the JA4 table references to match Column.

6.-7. List the R-value if frame walls are used. Otherwise enter N/A (not applicable). Enter the Continuous Insulation R-value for the proposed assembly.

*8. The Proposed Assembly U-factor, Column J, must be equal to or less than the **Standard** U-factor in Column D to comply.*

9.For Mass-Furring only, use the table below to calculate the effects of furring on mass., Use the Final Assembly R-value from Column JJ below and enter it in Column J. The Proposed R-value must be greater than the Standard R-value in Column D to comply.

Mass and Furring Strips Construction

AA	BB	CC	DD	EE	FF	GG	HH	II	JJ	KK	LL
				Added Interior or Exterior Insulation in Furring cavity Space from Reference Joint Appendix JA4 Table 4.3.13							
Frame Type & Thickness[1]	Assembly Type	From Reference Joint Appendix JA4 Tables/ Row & Column	U-Factor[2]	Row & Column	Frame Thickness	Frame Type Wood/Metal	Furring Cavity R-value[3]	Calculated R-value[4]	Final Assembly R-Value[5]	Final Assembly U-factor[6,7]	Comment

Registration Number: _____ Registration Date/Time: _____ HERS Provider: _____

Project Name:	**Climate Zone #**	**# of Stories**

Mass and Furring Strips Construction (footnotes)

1. Indicate the type of assembly to include; Hollow Unit Masonry Walls, Solid Unit Masonry, Solid Concrete Walls, Etc. Additional assemblies can be found Reference Joint Appendix JA4.
2. This is the U-Factor based on the thickness of the assembly in inches.
3. The R-value of the insulation to be added on the interior or exterior of the assembly.
4. The Calculated R-Value is the R-value of the furred out section of the assembly.
5.-6.The Final Assembly is calculated using Equation 4-2 or Equation 4-4of the Reference Joint Appendix JA4. The equation is the inverse of Column D added to Column I. Column K is the inverse from column J.
7. Insert the calculated U-factor value on to the Opaque Surface Details in Column J

FENESTRATION PROPOSED AREAS

☐ **Replacing window alone** – *Replacement windows shall meet the U-Factor and SHGC Value requirements of Component Package D in Table 151-C. The Total Fenestration and West-facing Area requirements are not applicable.*

☐ **Adding 50ft^2 or less of window area** – *Newly installed windows shall meet the U-Factor and SHGC Value requirements of Component Package D in Table 151-C. The Total Fenestration Area requirement is not applicable, but the existing west-facing fenestration area shall not be increased by more than 50 ft^2.*

☐ **Adding more than 50ft^2 of window area** – *Newly installed windows shall meet the U-Factor and SHGC Value and the Fenestration Area requirements of Component Package D in Table 151-C. Complete the Altered Fenestration Allowed Area Table on Page 2 of the CF-1R-ALT*

Fenestration Type (Window, Glass Door or Skylight)	Orientation (North, East, South, West)	PropsedArea[1] (ft^2)	Maximum U-factor[2, 3]	Maximum SHGC[2, 3, 4]	NFRC or Default Value[5]

1. Fenestration area is the area of total glazed product (i.e. glass plus frame). Exception: When a door is less than 50% glass, the fenestration area may be the glass area plus a "2 inch frame" around the glass.
2. Enter value from Component Package D Requirements in Table 151-C.
3. Actual fenestration products installed and as indicated in CF-6R-ENV Form shall be equivalent to or have a lower U-factor and/or a lower SHGC value than that specified on the CF-1R Form.
4. Submit a completed WS-3R Form if a reduced SHGC is calculated with exterior shading.
5.If applicable at this stage enter "NFRC" for NFRC Certified windows or are CEC "Default" values found in Table 116-A or B.

ALTERED FENESTRATION ALLOWED AREAS *(Complete if more than 50ft^2 of fenestration is added)*

	A	B	C	D	E	F		G
	CFA of Entire Dwelling	Allowed % of CFA	Existing Fenestration Area	Fenestration Area Removed	Fenestration Area Added	Total Area Allowed (A x B)		Proposed Area[2] (E-D) + C
Total Fenestration Area (ft^2)		.20					≥	
West Fenestration Area[1] (Required In ClZs 2, 4 & 7 -15)		.05					≥	

1. West Fenestration Area includes west-sloping skylights and any skylights with a pitch less than 1:12.
2. West facing glazing area removed cannot be "counted" twice." In order to distribute the west glazing area removed to the other orientations, input the west glazing area removed in the Total Fenestration Area row, column D.
3. Include the Proposed Area of the West facing fenestration in both Area columns below.
4. To meet compliance, the Proposed Area must be less than or equal to the Total Allowed Area for BOTH the Total and West Fenestration Areas.

Registration Number: _____ *Registration Date/Time:* _____ *HERS Provider:* _____

Project Name:	**Climate Zone #**	**# of Stories**

ROOFING PRODUCTS (COOL ROOFS) *§151(f)12*

When the area of exterior roof surface to be replaced exceeds more than 50% of the existing roof area, or more than 1,000 ft^2, whichever is less, the new roofing area must meet the roofing product "Cool Roof" requirements of §152(b)1Hi, 152(b)1Hii, or 152(b)1Hiii.

*Check applicable **alternative** or **exception** below if the roof alteration is exempt from the roofing product "Cool Roof" requirements. Note: If any one of the alternatives or exception below is checked, the Aged Solar Reflectance and Thermal Emittance requirements for roofing products in §118(i) are not applicable. Do not fill table below.*

Alternatives to §152(b)1Hi and §152(b)Hii, Steep-slope roof *(pitch > 2:12)*

- ☐ Insulation with a thermal resistance of at least 0.85 hr·ft^2·°F/Btu or at least a 3/4 inch air-space is added to the roof deck over an attic; or
- ☐ Existing ducts in the attic are insulated and sealed according to §151(f)10; or
- ☐ In climate zones 10, 12 and 13, with 1 ft^2 of free ventilation area of attic ventilation for every 150 ft^2 of attic floor area, and where at least 30 percent of the free ventilation area is within 2 feet vertical distance of the roof ridge; or
- ☐ Building has at least R-30 ceiling insulation; or
- ☐ Building has radiant barrier in the attic meeting the requirements of §151(f)2; or
- ☐ Building has no ducts in the attic; or
- ☐ In climate zones 10, 11, 13 and 14, R-3 or greater roof deck insulation above vented attic.

Exception to §152(b)1Hiii, Low-slope roof *(pitch ≤ 2:12)*

- ☐ Building has no ducts in the attic.

Other Exceptions

- ☐ Roofing area covered by building integrated; photovoltaic panels and solar thermal panels are exempt from the below Cool Roof criteria.
- ☐ Roof constructions that have thermal mass over the roof membrane with at least 25 lb/ft^2 is exempt from the below Cool Roof criteria.

Note: If no CRRC-1 label is available, this compliance method cannot be used, use the Performance Approach to show compliance, otherwise, Check the applicable box below if Exempt from the Roofing Products "Cool Roof" Requirement:

CRRC Product ID Number[1]	Roof Slope ≤ 2:12	Roof Slope > 2:12	Product Weight < 5lb/ft^2	Product Weight ≥ 5lb/ft^2	Product Type[2]	Aged Solar Reflectance[3,4]		Thermal Emmitance	SRI[5]
	☐	☐	☐	☐		☐[4]			
	☐	☐	☐	☐		☐[4]			
	☐	☐	☐	☐		☐[4]			
	☐	☐	☐	☐		☐[4]			
	☐	☐	☐	☐		☐[4]			

1. The CRRC Product ID Number can be obtained from the Cool Roof Rating Council's Rated Product Directory at www.coolroofs.org/products/search.php
2. Indicate the type of product is being used for the roof top, i.e. single-ply roof, asphalt roof, metal roof, etc.
3. If the Aged Reflectance is not available in the Cool Roof Rating Council's Rated Product Directory then use the Initial Reflectance value from the same directory and use the equation $(0.2+0.7(\rho_{initial} - 0.2)$ to obtain a calculated aged value. Where ρ is the Initial Solar Reflectance.
4. Check box if the Aged Reflectance is a calculated value using the equation above.
5.The SRI value needs to be calculated from a spredsheet at http://www.energy.ca.gov/title24/

To apply **Liquid Field Applied Coatings,** the coating must be applied across the entire roof surface and meet the dry mil thickness or coverage recommended by the coatings manufacturer and meet minimum performance requirements listed in §118(i)4. Select the applicable coating:

☐ Aluminum-Pigmented Asphalt Roof Coating	☐ Cement-Based Roof Coating	☐ Other _____

Project Name:	**Climate Zone #**	**# of Stories**

HVAC SYSTEMS - HEATING

Heating Equipment Type and Capacity[1,2,3]	Minimum Efficiency (AFUE or HSPF)	Distribution Type and Location	Duct or Piping Insulation R-Value[4]	Thermostat Type	Configuration (or Package)

1. *Indicate Heating Type (Central Furnace, Wall Furnace, Heat pump, Boiler, Electric Resistance, etc.)*
2. *New heating equipment shall be limited to natural gas, liquefied petroleum gas, or the existing fuel type. Electric resistance heating is allowed as supplemental heating if the total capacity $\leq$ 2 KW and electric heating is controlled by a time-limiting device not exceeding 60 minutes*
3. *Refer to the HERS Verification section on Page 4 of the CF-1R-ALT Form for additional requirements and check applicable boxes.*
4. *Indicate Type or Location (Ducts, Hydronic in Floor, Radiators, etc.)*

HVAC SYSTEMS - COOLING

Cooling Equipment Type and Capacity[1,2]	Minimum Efficiency (SEER/EER or COP)	Distribution Type and Location	Duct or Piping Insulation R-Value[3]	Thermostat Type	Configuration (Split or package)

1. *Indicate Cooling Type (A/C, Heat pump, Evap. Cooling, etc)*
2. *Refer to the HERS Verification section on Page 4 of the CF-1R-ALT Form for additional requirements and check applicable boxes.*
3. *Indicate Type or Location (Ducts, Hydronic in Floor, Radiators, etc.)*

WATER HEATING

List water heaters and boilers for both domestic hot water (DHW) heaters and hydronic space heating. Individual dwelling DHW heaters must be gas or propane fired, and may not exceed 50 gallons. Hot water pipe insulation from the DHW heater to the kitchen(s) and on all underground hot water pipes is required in all component packages in all climate zones.

Water Heater Type/Fuel Type[1,2]	Distribution Type (Standard, Recirculation)[3]	Number In System	Tank Capacity (gal)	Energy Factor or Thermal Efficiency	Tank Insulation R-Value[4]

1. *Indicate Type (Storage Gas, Heat Pump, Instantaneous, etc.)*
2. *The new water heater type shall be limited to natural gas, liquefied petroleum gas, or the existing fuel type.*
3. *Recirculating systems serving multiple dwelling units shall meet the recirculation requirements of §150(n). The Prescriptive requirements do not allow the installation of a recirculating water heating system for single dwelling units.*
4. *The external water heating tank and pipes shall be insulated to meet the requirements of §150(j).*

SPECIAL FEATURES

The *enforcement agency should pay special attention to the Special Features specified in this checklist below. These items may require written justification and documentation and special verification.*

NEW ROOF ASSEMBLY - Radiant Barrier
The radiant barrier requirement of §151(f)2 does not apply to roof alterations.

Slab Edge (Perimeter) Insulation ☐ **YES** ☐ **NO**
YES: In Climate Zone 16 in Component Packages D, R-7 insulation is required.

Heated Slab Insulation ☐ **YES** ☐ **NO**
YES: Slab edge insulation required for all heated slabs in all Climate Zones. See details in Table 118-A of the standards.

Raised Slab Insulation ☐ **YES** ☐ **NO**
YES: In Climate Zones 1, 2, 11, 13, 14 & 16, R-8 insulation is required; in Climate Zones 12 & 15, R-4 is required under component Package D.

Thermal Mass
To obtain Compliance Credit for the installation of thermal mass, use the Performance Approach.

Project Name:	**Climate Zone #**	**# of Stories**

HERS VERIFICATION SUMMARY *The enforcement agency should pay special attention to the HERS Measures specified in this checklist below. A completed and signed CF-4R Form for all the measures specified shall be submitted to the building inspector before final inspection.*

Duct Sealing & Testing *HERS verification is required for this measure.*

☐ **YES** ☐ **NO** **YES**: In Climate Zones 2 and 9-16, if more than 40 linear feet of new or replacement ducts are installed in unconditioned space, the ducts are to be sealed per §152(b)1Dii and the newly installed ducts are to be insulated per §151(f)10.

☐ **EXECPTION: Existing duct systems that are extended, which are constructed, insulated or sealed with asbestos.**

☐ **YES** ☐ **NO** **YES**: In Climate Zones 2 and 9-16, if an entirely new ducted system is installed, the ducts are to be sealed per §152(b)1Di.

☐ **YES** ☐ **NO** **YES**: In Climate Zones 2 and 9-16, if the existing HVAC is replaced (including the replacement of the air handler, outdoor condensing unit of a split system A/C or heat pump, cooling or heating coil, of the furnace heat exchanger) the ducts are to be sealed per §152(b)1E.

☐ **EXCEPTION: Duct systems that are documented to have been previously sealed confirmed through HERS verification in accordance with procedures in the Reference Residential Appendix RA3.**

☐ **EXCEPTION: Duct systems with less than 40 linear feet in unconditioned space.**

☐ **EXCEPTION: Existing duct systems constructed, insulated or sealed with asbestos.**

Refrigerant Charge - Split System *HERS verification is required for this measure.*

☐ **YES** ☐ **NO** **YES**: In Climate Zones 2 and 8-15, when the existing ducted split A/C or heat pump is replaced (including the replacement of the air handler, outdoor condensing unit of a split system A/C or heat pump, cooling or heating coil, or the furnace heat exchanger) the refrigerant charge shall be verified per §152(b)1F.

Central Fan Integrated (CFI) Ventilation System and Fan Watt Draw

The ventilation requirements of §150(o) do not apply to existing residential homes.

Ducted Split Systems - Air Conditioners and Heat Pumps: Airflow *HERS verification is required for this measure.*

☐ **YES** ☐ **NO** **YES**: In Climate Zones 10 through 15, when the entire existing space conditioning system (HVAC equipment plus the ducts) is replaced, the airflow and fan watt draw shall be verified per §152(b)1Ci to meet the requirements of §151(f)7B.

Documentation Author's Declaration Statement

- **I certify that this Certificate of Compliance documentation is accurate and complete.**

Name:	Signature:
Company:	Date:
Address:	If Applicable ☐ CEA or ☐ CEPE (Certification #):
City/State/Zip:	Phone:

Responsible Building Designer's Declaration Statement

- I am eligible under Division 3 of the California Business and Professions Code to accept responsibility for the building design identified on this Certificate of Compliance.
- I certify that the energy features and performance specifications for the building design identified on this Certificate of Compliance conform to the requirements of Title 24, Parts 1 and 6 of the California Code of Regulations.
- The building design features identified on this Certificate of Compliance are consistent with the information provided to document this building design on the other applicable compliance forms, worksheets, calculations, plans and specifications submitted to the enforcement agency for approval with this building permit application.

Name:	Signature:
Company:	Date:
Address:	License:
City/State/Zip:	Phone:

For assistance or questions regarding the Energy Standards, contact the Energy Hotline at: 1-800-772-3300.

Registration Number: _____ *Registration Date/Time:* _____ *HERS Provider:* _____

SOLAR WATER HEATING CALCULATION FORM CF-SR

Project Title	Date

CF-SR- Solar Water Heating Calculation Form	OG-300
Property Name: _____	Building Type: (Single Family, Multi-family): _____
Total Conditioned Floor Area (CFA)ft^2: _____	Climate zone (1-16): _____

INPUTS FOR SYSTEMS SRCC OG-300:	
1. Solar Energy Factor of OG-300 solar water heating system as listed in SRCC directory	
2. Energy Factor of Water Heater (enter .6 for gas .9 for electric)	
3. Constant - 41045 (amount of energy used in SRCC test)	41045.0
4. Constant - 3500 average parasitic loss value in SRCC test	3500.0
5. Gallons per day use value calculated as: (21.5 x .0014 x CFA) from top of page	
6. Constant – 64.3 gallons used in SRCC test method	64.3
7. Hot water supply temperature 135 degrees	135.0
8. Enter inlet water temperature (inlet water temperature values are listed on Table 1 by Climate Zone)	
9. Difference in supply and inlet water temperature (subtract line 7 from line 8)	1500.0
10. Constant - 1500 Solar radiation value used in SRCC test	
11. Solar radiation level from Table 1 below	
CALCULATION FOR SYSTEM	
12. Multiply line 2 by line 3	
13. Divide line 12 by line 1	
14. Divide line 5 by line 6	
15. Divide the result in line 9 by 77	
16. Subtract 1 by line 2	
17. Multiply lines 13 by line 14 by line 15	
18. Multiply lines 4 by line 16	
19. Add line 17 to line 18	
20. Divide line 19 by line 3	
21. Divide line 10 by line 11	
22. Multiply line 20 by line 21	
23. Subtract 1 from line 22	
Solar Fraction (from line 23)	

Table 1

Climate Zone	Water Temperature	Solar Radiation		Climate Zone	Water Temperature	Solar Radiation
1	53.90	1220		9	63.76	1685
2	57.52	1220		10	63.76	1612
3	57.69	1533		11	61.00	1580
4	59.12	1601		12	59.65	1670
5	57.93	1602		13	63.99	1726
6	61.55	1599		14	61.48	1827
7	62.63	1586		15	73.55	1884
8	62.97	1682		16	50.54	1513

Note: For all solar water heating systems rated using the SRCC OG 300 test method a copy of the SRCC test result must be attached along with this form and with the rest of the documentation. To use this approach the water heater used in compliance has the same fuel type and energy factor that was used in the SRCC test.

DRAFT

Mandatory Measures Summary MF-1R

Residential

Site Address:	Enforcement Agency:	Date:

NOTE: Low-rise residential buildings subject to the Standards must comply with all applicable mandatory measures listed, regardless of the compliance approach used. More stringent energy measures listed on the Certificate of Compliance (CF-1R, CF-1R-ADD, or CF-1R-ALT Form) shall supersede the items marked with an asterisk (*) below. This Mandatory Measures Summary shall be incorporated into the permit documents, and the applicable features shall be considered by all parties as minimum component performance specifications whether they are shown elsewhere in the documents or in this summary. Submit all applicable sections of the MF-1R Form with plans.

DESCRIPTION

Building Envelope Measures:

§116(a)1: Doors and windows between conditioned and unconditioned spaces are manufactured to limit air leakage.

§116(a)4: Fenestration products (except field-fabricated windows) have a label listing the certified U-Factor, certified Solar Heat Gain Coefficient (SHGC), and infiltration that meets the requirements of §10-111(a).

§117: Exterior doors and windows are weather-stripped; all joints and penetrations are caulked and sealed.

§118(a): Insulation specified or installed meets Standards for Insulating Material. Indicate type and include on CF-6R Form.

§118(i): The thermal emittance and solar reflectance values of the cool roofing material meets the requirements of §118(i) when the installation of a Cool Roof is specified on the CF-1R Form.

*****§150(a): Minimum R-19 insulation in wood-frame ceiling or equivalent U-factor.

§150(b): Loose fill insulation shall conform with manufacturer's installed design labeled R-Value.

*****§150(c): Minimum R-13 insulation in wood-frame wall or equivalent U-factor.

*****§150(d): Minimum R-13 insulation in raised wood-frame floor or equivalent U-factor.

§150(f): Air retarding wrap is tested, labeled, and installed according to ASTM E1677-95(2000) when specified on the CF-1R Form.

§150(g): Mandatory Vapor barrier installed in Climate Zones 14 or 16.

§150(l): Water absorption rate for slab edge insulation material alone without facings is no greater than 0.3%; water vapor permeance rate is no greater than 2.0 perm/inch and shall be protected from physical damage and UV light deterioration.

Fireplaces, Decorative Gas Appliances and Gas Log Measures:

§150(e)1A: Masonry or factory-built fireplaces have a closable metal or glass door covering the entire opening of the firebox.

§150(e)1B: Masonry or factory-built fireplaces have a combustion outside air intake, which is at least six square inches in area and is equipped with a with a readily accessible, operable, and tight-fitting damper and or a combustion-air control device.

§150(e)2: Continuous burning pilot lights and the use of indoor air for cooling a firebox jacket, when that indoor air is vented to the outside of the building, are prohibited.

Space Conditioning, Water Heating and Plumbing System Measures:

§110-§113: HVAC equipment, water heaters, showerheads, faucets and all other regulated appliances are certified by the Energy Commission.

§113(c)5: Water heating recirculation loops serving multiple dwelling units and High-Rise residential occupancies meet the air release valve, backflow prevention, pump isolation valve, and recirculation loop connection requirements of §113(c)5.

§115: Continuously burning pilot lights are prohibited for natural gas: fan-type central furnaces, household cooking appliances (appliances with an electrical supply voltage connection with pilot lights that consume less than 150 Btu/hr are exempt), and pool and spa heaters.

§150(h): Heating and/or cooling loads are calculated in accordance with ASHRAE, SMACNA or ACCA.

§150(i): Heating systems are equipped with thermostats that meet the setback requirements of Section 112(c).

150(j)1A: Storage gas water heaters rated with an Energy Factor no greater than the federal minimal standard are externally wrapped with insulation having an installed thermal resistance of R-12 or greater.

§150(j)1B: Unfired storage tanks, such as storage tanks or backup tanks for solar water-heating system, or other indirect hot water tanks have R-12 external insulation or R-16 internal insulation where the internal insulation R-value is indicated on the exterior of the tank.

§150(j)2: First 5 feet of hot and cold water pipes closest to water heater tank, non-recirculating systems, and entire length of recirculating sections of hot water pipes are insulated per Standards Table 150-B.

§150(j)2: Cooling system piping (suction, chilled water, or brine lines),and piping insulated between heating source and indirect hot water tank shall be insulated to Table 150-B and Equation 150-A.

§150(j)2: Pipe insulation for steam hydronic heating systems or hot water systems >15 psi, meets the requirements of Standards Table 123-A.

§150(j)3A: Insulation is protected from damage, including that due to sunlight, moisture, equipment maintenance, and wind.

§150(j)3A: Insulation for chilled water piping and refrigerant suction lines includes a vapor retardant or is enclosed entirely in conditioned space.

§150(j)4: Solar water-heating systems and/or collectors are certified by the Solar Rating and Certification Corporation.

Site Address:	Enforcement Agency:	Date:

Ducts and Fans Measures:
§150(m)1: All air-distribution system ducts and plenums installed, are sealed and insulated to meet the requirements of CMC Sections 601, 602, 603, 604, 605 and Standard 6-5; supply-air and return-air ducts and plenums are insulated to a minimum installed level of R-4.2 or enclosed entirely in conditioned space. Openings shall be sealed with mastic, tape or other duct-closure system that meets the applicable requirements of UL 181, UL 181A, or UL 181B or aerosol sealant that meets the requirements of UL 723. If mastic or tape is used to seal openings greater than 1/4 inch, the combination of mastic and either mesh or tape shall be used
§150(m)1: Building cavities, support platforms for air handlers, and plenums defined or constructed with materials other than sealed sheet metal, duct board or flexible duct shall not be used for conveying conditioned air. Building cavities and support platforms may contain ducts. Ducts installed in cavities and support platforms shall not be compressed to cause reductions in the cross-sectional area of the ducts.
§150(m)2D: Joints and seams of duct systems and their components shall not be sealed with cloth back rubber adhesive duct tapes unless such tape is used in combination with mastic and draw bands.
§150(m)7: Exhaust fan systems have back draft or automatic dampers.
§150(m)8: Gravity ventilating systems serving conditioned space have either automatic or readily accessible, manually operated dampers.
§150(m)9: Insulation shall be protected from damage, including that due to sunlight, moisture, equipment maintenance, and wind. Cellular foam insulation shall be protected as above or painted with a coating that is water retardant and provides shielding from solar radiation that can cause degradation of the material.
§150(m)10: Flexible ducts cannot have porous inner cores.
§150(o): All dwelling units shall meet the requirements of ANSI/ASHRAE Standard 62.2-2007 Ventilation and Acceptable Indoor Air Quality in Low-Rise Residential Buildings. Window operation is not a permissible method of providing the Whole Building Ventilation required in Section 4 of that Standard.
Pool and Spa Heating Systems and Equipment Measures:
§114(a): Any pool or spa heating system shall be certified to have: a thermal efficiency that complies with the Appliance Efficiency Regulations; an on-off switch mounted outside of the heater; a permanent weatherproof plate or card with operating instructions; and shall not use electric resistance heating or a pilot light.
§114(b)1: Any pool or spa heating equipment shall be installed with at least 36" of pipe between filter and heater, or dedicated suction and return lines, or built-up connections for future solar heating
§114(b)2: Outdoor pools or spas that have a heat pump or gas heater shall have a cover.
§114(b)3: Pools shall have directional inlets that adequately mix the pool water, and a time switch that will allow all pumps to be set or programmed to run only during off-peak electric demand periods.
§150(p): Residential pool systems or equipment meet the pump sizing, flow rate, piping, filters, and valve requirements of §150(p).
Residential Lighting Measures:
§150(k)1: High efficacy luminaires or LED Light Engine with Integral Heat Sink has an efficacy that is no lower than the efficacies contained in Table 150-C and is not a low efficacy luminaire as specified by §150(k)2.
§150(k)3: The wattage of permanently installed luminaires shall be determined as specified by §130(d).
§150(k)4: Ballasts for fluorescent lamps rated 13 Watts or greater shall be electronic and shall have an output frequency no less than 20 kHz.
§150(k)5: Permanently installed night lights and night lights integral to a permanently installed luminaire or exhaust fan shall contain only high efficacy lamps meeting the minimum efficacies contained in Table 150-C and shall not contain a line-voltage socket or line-voltage lamp holder; OR shall be rated to consume no more than five watts of power as determined by §130(d), and shall not contain a medium screw-base socket.
§150(k)6: Lighting integral to exhaust fans, in rooms other than kitchens, shall meet the applicable requirements of §150(k).
§150(k)7: All switching devices and controls shall meet the requirements of §150(k)7.
§150(k)8: A minimum of 50 percent of the total rated wattage of permanently installed lighting in kitchens shall be high efficacy. EXCEPTION: Up to 50 watts for dwelling units less than or equal to 2,500 ft^2 or 100 watts for dwelling units larger than 2,500 ft^2 may be exempt from the 50% high efficacy requirement when: all low efficacy luminaires in the kitchen are controlled by a manual on occupant sensor, dimmer, energy management system (EMCS), or a multi-scene programmable control system; and all permanently installed luminaries in garages, laundry rooms, closets greater than 70 square feet, and utility rooms are high efficacy and controlled by a manual-on occupant sensor.
§150(k)9: Permanently installed lighting that is internal to cabinets shall use no more than 20 watts of power per linear foot of illuminated cabinet.
§150(k)10: Permanently installed luminaires in bathrooms, attached and detached garages, laundry rooms, closets and utility rooms shall be high efficacy. EXCEPTION 1: Permanently installed low efficacy luminaires shall be allowed provided that they are controlled by a manual-on

Site Address:	Enforcement Agency:	Date:

occupant sensor certified to comply with the applicable requirements of §119. EXCEPTION 2: Permanently installed low efficacy luminaires in closets less than 70 square feet are not required to be controlled by a manual-on occupant sensor.
§150(k)11: Permanently installed luminaires located in rooms or areas other than in kitchens, bathrooms, garages, laundry rooms, closets, and utility rooms shall be high efficacy luimnaires. EXCEPTION 1: Permanently installed low efficacy luminaires shall be allowed provided they are controlled by either a dimmer switch that complies with the applicable requirements of §119, or by a manual-on occupant sensor that complies with the applicable requirements of §119. EXCEPTION 2: Lighting in detached storage building less than 1000 square feet located on a residential site is not required to comply with §150(k)11.
§150(k)12: Luminaires recessed into insulated ceilings shall be listed for zero clearance insulation contact (IC) by Underwriters Laboratories or other nationally recognized testing/rating laboratory; and have a label that certifies the lumiunaire is airtight with air leakage less then 2.0 CFM at 75 Pascals when tested in accordance with ASTM E283; and be sealed with a gasket or caulk between the luminaire housing and ceiling.
§150(k)13: Luminaires providing outdoor lighting, including lighting for private patios in low-rise residential buildings with four or more dwelling units, entrances, balconies, and porches, which are permanently mounted to a residential building or to other buildings on the same lot shall be high efficacy. EXCEPTION 1: Permanently installed outdoor low efficacy luminaires shall be allowed provided that they are controlled by a manual on/off switch, a motion sensor not having an override or bypass switch that disables the motion sensor, and one of the following controls: a photocontrol not having an override or bypass switch that disables the photocontrol; OR an astronomical time clock not having an override or bypass switch that disables the astronomical time clock; OR an energy management control system (EMCS) not having an override or bypass switch that allows the luminaire to be always on EXCEPTION 2: Outdoor luminaires used to comply with Exception1 to §150(k)13 may be controlled by a temporary override switch which bypasses the motion sensing function provided that the motion sensor is automatically reactivated within six hours. EXCEPTION 3: Permanently installed luminaires in or around swimming pool, water features, or other location subject to Article 680 of the California Electric Code need not be high efficacy luminaires.
§150(k)14: Internally illuminated address signs shall comply with Section 148; OR not contain a screw-base socket, and consume no more than five watts of power as determined according to §130(d).
§150(k)15: Lighting for parking lots and carports with a total of for 8 or more vehicles per site shall comply with the applicable requirements in Sections 130, 132, 134, and 147. Lighting for parking garages for 8 or more vehicles shall comply with the applicable requirements of Sections 130, 131, 134, and 146
§150(k)16: Permanently installed lighting in the enclosed, non-dwelling spaces of low-rise residential buildings with four or more dwelling units shall be high efficacy luminaires. EXCEPTION: Permanently installed low efficacy luminaires shall be allowed provided that they are controlled by an occupant sensor(s) certified to comply with the applicable requirements of §119.

Thermal Mass Worksheet		WS-1R
Residential		**(Page 1 of 1)**
Site Address:	**Enforcement Agency:**	**Date:**

INTERIOR THERMAL MASS:

Thermal Mass required for Package C in Table 151-B shall meet or exceed the required interior mass capacity as specified below.

Choose one of the following:

Package C (Slab Floor)	2.36	x	=	
		Ground Floor Area-Slab Floor		Required Interior Mass Capacity
Package C (Raised Floor)	0.18	x	=	
		Ground Floor Area-Raised Floor		Required Interior Mass Capacity

Calculate the Interior Mass Capacity value using the worksheet space below. Look up the Unit Interior Mass Capacity for each interior mass surface in Reference Residential Appendix RA5. For interior mass walls exposed on both (two) sides to conditioned space, enter the surface area of only one side.

Description	Mass Area		Unit Interior Mass Capacity		Interior Mass Capacity
		x		=	
		x		=	
		x		=	
		x		=	
		x		=	
		x		=	
		x		=	
		x		=	
				Total Interior Mass Capacity	

The total interior mass capacity must be equal to or greater than the required interior mass capacity in order to meet the thermal mass requirements of Packages C.

_____ ≥ _____

Total Interior Mass Capacity Required Interior Mass Capacity

Area Weighted Average Calculation Worksheet WS-2R

Residential **(Page 1 of 1)**

Site Address:	**Enforcement Agency:**	**Date:**

This worksheet should be used to calculate weight-averaged U-factors or averaged SHGC values for prescriptive envelope compliance. R-values can never be area weighted; only area-weighted U-factors.

Whenever two or more types of a building feature, material, or construction assembly occur in a building, a weighted average of the different types must be calculated. Weighted averaging is simply a mathematical technique for combining different amounts of various components into a single number. Weighted averaging is frequently done when there is more than one level of floor, wall, or ceiling insulation in a building, or more than one type of window (the SHGC values of skylights cannot be averaged per §151(f)4A).

a. "Area" can be replaced throughout the formula by "Length" or any other unit of measure used for the value being averaged.
b. "Value" can be replaced throughout the formula by "U-factor," "Solar Heat Gain Coefficient," or any other value that varies throughout a residence and is appropriate to weight average.

Item No.	Type 1 Value[b]		Type 1 Area[a]		Type 2 Value[b]		Type 2 Area[a]		Type 3 Value[b]		Type 3 Area[a]		Total Area		Weighted Average Value
	[(_____)	x	(_____)	+	(_____)	x	(_____)	+	(_____)	x	(_____)]	÷		=	
	[(_____)	x	(_____)	+	(_____)	x	(_____)	+	(_____)	x	(_____)]	÷		=	
	[(_____)	x	(_____)	+	(_____)	x	(_____)	+	(_____)	x	(_____)]	÷		=	
	[(_____)	x	(_____)	+	(_____)	x	(_____)	+	(_____)	x	(_____)]	÷		=	
	[(_____)	x	(_____)	+	(_____)	x	(_____)	+	(_____)	x	(_____)]	÷		=	
	[(_____)	x	(_____)	+	(_____)	x	(_____)	+	(_____)	x	(_____)]	÷		=	
	[(_____)	x	(_____)	+	(_____)	x	(_____)	+	(_____)	x	(_____)]	÷		=	
	[(_____)	x	(_____)	+	(_____)	x	(_____)	+	(_____)	x	(_____)]	÷		=	

Solar Heat Gain Coefficient Worksheet WS-3R

Residential **(Page 1 of 2)**

Site Address:	Enforcement Agency:	Date:

Items 1 through 4 must be completed for glazing/shading combinations by using the Default Table for Fenestration Products (Table 116-B of the Standards), NFRC certified data, or Solar Heat Gain Coefficients Used for Exterior Shading Attachments (Table S-1 below) for the specific conditions indicated (#1a or #1b or #3).

General Information

1a. For Fenestration Products w/NFRC testing and labels: $SHGC_{fen}$ = _____

OR

1b. For Fenestration Products without NFRC testing and labels (Table 116-B of the Standards): $SHGC_{fen}$ = _____

1c. Frame Type	1d. Product Type	1e. Glazing Type	1f. Single/Double Pane
_____	_____	_____	_____
metal, non-metal, metal w/thermal break	operable/fixed	(visibly) tinted clear (not visibly tinted)	single pane/double pane

2. Skylight (Y/N) _____

(A skylight is fenestration mounted on a roof surface at a slope less than 60º from the horizon.)

Combined Exterior Shade with Fenestration

3. $SHGC_{Exterior\ Shade}$: _____ Exterior Shade Type: _____

(If no exterior shade, assume standard bug screens, $SHGC_{Exterior\ Shade}$ = 0.76 for ordinary windows. This requirement does not apply to skylights where $SHGC_{Exterior\ Shade}$ is assumed to be 1.00. If another exterior shade is substituted for bug screens, use one of the values from Table S-1.

4. [(_____ × 0.2875) + 0.75] × _____ = Total SHGC

$SHGC_{max}$ $SHGC_{min}$

Where:
$SHGC_{max}$ = Larger of (#1a or #1b) or #3
$SHGC_{min}$ = Smaller of (#1a or #1b) or #3

Note: Calculated Solar Heat Gain Coefficient values for Total SHGC may be used directly for prescriptive packages.

- Package C Target Value for Total SHGC is 0.40 for Climate Zones 2 through 15
- Package D Target Value for Total SHGC is 0.40 for Climate Zones 2, 4 through 14 and 0.35 in Climate Zone 15
- Package E Target Value for Total SHGC is 0.40 for Climate Zones 2, 3, 5, 6, 8 through 10, and 0.25 in Climate Zones 4, 7, 11, 12, 14, and 15, and 0.30 in Climate Zone 13.

Table S-1: Solar Heat Gain Coefficients Used for Permanently Installed Exterior Shading Attachments for WS-3R [1,2]

Exterior Shading Device[3]	w/Single Pane Clear Glass & Metal Framing[4]
1) Standard Bug Screens	0.76
2) Exterior Sunscreens with Weave 53 x 16/inch	0.30
3) Louvered Sunscreens w/Louvers as Wide as Openings	0.27
4) Low Sun Angle (LSA) Louvered Sunscreens	0.13
5) Vertical Roller Shades or Retractable/Drop Arm/Marquisolette Awnings[2]	0.13
6) Roll Down Blinds or Slats	0.13
7) None (for skylights only)	1.00

1. *These values may be used on line 3 of the Solar Heat Gain Coefficient (SHGC) Worksheet (WS-3R) to calculate exterior shading with other glazing types and combined interior and exterior shading with glazing.*
2. *Exterior operable awnings (canvas, plastic or metal), except those that roll vertically down and cover the entire window, should be treated as overhangs (use the SHGC equation) for the purposes of compliance with the Standards. See Fixed Shading Devices and Exterior Shading Devices in the Residential compliance Manual, Chapter 3.*
3. *Standard bug screens must be assumed for all fenestration unless replaced by other exterior shading attachments. The solar heat gain coefficient listed for bug screens is an area-weighted value that assumes that the screens are only on operable windows. The solar heat gain coefficient of any other exterior shade screens applied only to some window areas must be area-weighted with the solar heat gain coefficient of standard bug screens for all other glazing (see Form WS-2R). Different shading conditions may also be modeled explicitly in the computer performance method.*
4. *Reference glass for determining solar heat gain coefficients is 1/8 inch double strength (DSS) glass.*

Instructions for WS-3R

The following explains how to calculate solar heat gain coefficients on WS-3R. The number of each item below corresponds to the appropriate item on WS-3R.

Enter either:

1a. For products with NFRC testing and labels, enter the product's labeled SHGC as #1a. $SHGC_{fen}$

OR

1b.	Enter the default $SHGC_{fen}$ from Table 116-B of the Standards corresponding to the fenestration characteristics described in entries 1c, 1d, 1e, and 1f. Entries for 1c, 1d, 1e, and 1f are only needed if 1b is entered for $SHGC_{fen}$.

If 1b is entered, then:

1c	Describe the Frame Type [metal, metal w/thermal break, or non-metal (non-metal includes both vinyl and wood)].
1d	The Product Type (operable or fixed).
1e	The glazing type (tinted or uncoated). Note that tints or coatings that cannot be easily observed by the building official must be classified as "uncoated." Tints must be easily visible to the naked eye.
1f	Single or double pane glazing.

2. For skylights mounted on a roof surface, enter "Y," otherwise enter "N." A skylight is fenestration mounted at a slope less than 60º from the horizon.

3. Describe the exterior shading device in the space provided (e.g., roll down awning). List $SHGC_{Exterior\ Shade}$, the SHGC of the exterior shade with 1/8" clear single pane glass and metal framing, from Table S-1. If a single window or skylight has multiple exterior shades (i.e., shade screens and awnings) use the one shading device with the lower SHGC.

   If no exterior shade is proposed, assume standard bug screens with a SHGC of 0.76 (or a SHGC or 1.00 for horizontal glazing). This applies to the full area of fixed fenestration products as well as operable.

4. Calculate $SHGC_{Shade\ Open}$ using values from Items 3 and either 1a or 1b. The result is the combined SHGC of the fenestration product and exterior device with the interior *shade open.*

INSTALLATION CERTIFICATE		CF-6R-ENV-01
Envelope – Insulation; Roofing; Fenestration		**(Page 1 of 3)**
Site Address:	**Enforcement Agency:**	**Permit Number:**

If more than one person has responsibility for installation of the items on this certificate, each person shall prepare and sign a certificate applicable to the portion of construction for which they are responsible; alternatively, the person with chief responsibility for construction shall prepare and sign this certificate for the entire construction.

Description of Insulation

1. RAISED FLOOR

Material:_____ Brand Name:_____

Thickness (inches):_____ Thermal Resistance (R-Value):_____

☐ §150(d): Minimum R-13 insulation in raised wood-frame floor or equivalent U-factor.

2. SLAB FLOOR/PERIMETER

Material:_____ Brand Name:_____

Thickness (inches):_____ Thermal Resistance (R-Value):_____

Perimeter Insulation Depth (inches): _____

☐ §150(l): Water absorption rate for the insulation material alone without facings is no greater than 0.3%; water vapor permeance rate is no greater than 2.0 perm/inch and shall be protected from physical damage and UV light deterioration.

3. EXTERIOR WALL

a. Insulation Type (e.x. Batt, Loose Fill, Spray Foam) _____ a. Thermal Resistance (R-Value): _____

b. . Insulation Type (e.x. Batt, Loose Fill, Spray Foam) _____ b. Thermal Resistance (R-Value): _____

Brand: _____

Spray/Losse fill) Installed Actual Thickness (inches):_____ Spray/Losse fill) Contractor's min installed weight/ft² _____lb

Manufacturer's installed weight per square foot to achieve Thermal Resistance (R-Value)

☐ §150(c): Minimum R-13 insulation in wood-frame wall or equivalent U-factor.

B. Exterior Foam Sheathing

Material:_____ Brand Name:_____

Thickness (inches) :_____ Thermal Resistance (R-Value) :_____

4. FOUNDATION WALL

Material:_____ Brand Name:_____

Thickness (inches):_____ Thermal Resistance (R-Value):_____

5. CEILING

Batt or Blanket Type: _____ Brand Name: _____

Loose Fill Type: _____ Thermal Resistance (R-Value): _____

Spray Foam Type: _____ Brand Name: _____

Installed Actual Thickness (inches):_____ Contractor's min installed weight/ft² _____lb

Manufacturer's installed weight per square foot to achieve Thermal Resistance (R-Value):

☐ §150(a): Minimum R-19 insulation in wood-frame ceiling or equivalent U-factor.

6. ROOF

Material: _____ Brand Name: _____

Thickness (inches): _____ Thermal Resistance (R-Value): _____

- ☐ §118(a): Insulation installed meets Standards for Insulating Material.
- ☐ §150(g): Mandatory Vapor barrier installed in Climate Zones 14 or 16.
- ☐ §150(f): Air retarding wrap installed when specified on CF-1R Special Features.

Site Address:	Enforcement Agency:	Permit Number:

7. Description of Attic Radiant Barrier (if applicable)

Material:_____ Brand Name:_____

Description of Roofing Products

CRRC Product ID Number[1]	Manufacturer Information	Brand/Model	Product Type	Roof Area	Roof Slope	Product Weight [2]	Initial Solar Reflectance	Aged Solar Reflectance[4]		Thermal Emittance
								☐[3]		
								☐[3]		
								☐[3]		

1. The CRRC Product ID Number can be obtained from the Cool Roof Rating Council's Rated Product Directory at ww.coolroofs.org/products/search.php
2. The weight in lbs per square feet of the roofing product being installed.
3. Check box if the Aged Reflectance is a calculated value using the equation below, footnote 4.
4. If the aged reflectance is not available in the Cool Roof Rating Council's Rated Product Directory then use the initial reflectance value from the directory and use the equation $(0.2+0.7(\rho_{initial} - 0.2)$ to obtain a calculated aged value.

✓☐ *CHECK APPLICABLE BOX BELOW IF EXEMPT FROM THE ROOFING PRODUCT "COOL ROOF" REQUIREMENT:*

☐ The roof area covered by building integrated photovoltaic panels and building integrated solar thermal panels are exempt from the above Cool Roof criteria.

☐ Roof constructions that have thermal mass over the roof membrane with a weight of at least 25 lb/ft^2 is exempted from the above Cool Roof criteria.

To apply Liquid Field Applied Coatings, the coating must be applied with a minimum dry mil thickness of 20 mils across the entire roof surface and meet minimum performance requirements listed in §118(i)3 and Table 118-C. Select the applicable coating

☐ Aluminum-Pigmented Asphalt Roof Coating	☐ Cement-Based Roof Coating	☐ Other _____

✓ ☐ CRRC-1 Label Attached to CF-6R
(Note if no CRRC-1 label is available, this compliance method cannot be used and another method is required to meet compliance).

FENESTRATION/GLAZING

Item	Manufacturer/Brand Name (GROUP LIKE RODUCTS)	Product U-factor[1]	Product SHGC[1]	# of Panes	NFRC Certified[1, 2]	Total Quantity of Like Product (*Optional*)	Area Ft^2	Add. Exterior Shading Dev. or Overhang	Comments/ Location/ Special Features
1									
2									
3									
4									
5									
6									

1. Use values from a fenestration product's NFRC Certified Label. For fenestration products without an NFRC label, use the default values from Section 116, Table 116-A and 116-B of the 2008 Energy Efficiency Standards.
2. NFRC Label Certificates shall not be removed until the building inspector has verified the efficiency. Enter Yes or No.

☐ §116(a)1: Doors and windows between conditioned and unconditioned spaces designed to limit air leakage.

☐ §116(a)2 and 3: Actual fenestration products installed are equivalent to or have a lower U-factor and/or a lower SHGC than that specified on the Certificate of Compliance (Form CF-1R).

☐ §116(a)4: Fenestration products (except field-fabricated windows) have a label listing the certified U-Factor, certified Solar Heat Gain Coefficient (SHGC), and infiltration that meets the requirements of §10-111(a)

☐ §117: Exterior doors and windows weather-stripped; all joints and penetrations caulked and sealed.

DECLARATION STATEMENT

- I certify under penalty of perjury, under the laws of the State of California, the information provided on this form is true and correct.
- I am eligible under Division 3 of the Business and Professions Code to accept responsibility for construction, or an authorized representative of the person responsible for construction (responsible person).
- I certify that the installed features, materials, components, or manufactured devices identified on this certificate (the installation) conforms to all applicable codes and regulations, and the installation is consistent with the plans and specifications approved by the enforcement agency.
- I reviewed a copy of the Certificate of Compliance (CF-1R) form approved by the enforcement agency that identifies the specific requirements for the installation. I certify that the requirements detailed on the CF-1R that apply to the installation have been met.
- **I will ensure that a completed, signed copy of this Installation Certificate shall be posted, or made available with the building permit(s) issued for the building, and made available to the enforcement agency for all applicable inspections. I understand that a signed copy of this Installation Certificate is required to be included with the documentation the builder provides to the building owner at occupancy.**

Company Name: (Installing Subcontractor or General Contractor or Builder/Owner)		
Responsible Person's Name:		Responsible Person's Signature:
CSLB License:	Date Signed:	Position With Company (Title):

BUILDING ENVELOPE SEALING

Two methods are available to the installer for demonstrating compliance with the building envelope sealing requirement: 1) Rough Frame Inspection Checklist and Final Inspection Checklist, or 2) Building Envelope Leakage Diagnostic Test utilizing a blower door diagnostic test instrument. Note: HERS verification of the actual envelope leakage is required to be performed using the Building Envelope Leakage Test. In order to receive credit for the Building Envelope Sealing measure, the dwelling must comply with the HERS verification requirements. Completion of the Rough Frame Inspection Checklist and Final Inspection Checklist does not insure that the envelope will meet the requirements of the HERS verification procedure.

1a. Rough Frame Inspection Checklist

Sole Plate

- ☐ Entire sole plate of the home is either Rope caulk, foam gasket, or with caulking bead sealed.

Top Plate

- ☐ All electrical penetrations between conditioned and unconditioned spaces sealed with foam
- ☐ All piping penetrations between conditioned and unconditioned spaces sealed with foam

Ceiling

- ☐ Ceiling forms a continues air barrier and any gaps or openings are filled with foam
- ☐ All recessed light fixtures in unconditioned space are IC (Insulation Contact) and AT (Air tight) rated and a gasket or sealing material is installed.
- ☐ All duct chases, fireplace chases, and double walls sealed air tight at the ceiling level. All gaps into shafts must be filled with foam or caulk.
- ☐ Openings around flue shafts fully sealed with solid blocking or flashing and any remaining gaps sealed with fire-rated caulk or sealant.
- ☐ Penetrations from wiring sealed with caulk or sealant

Floor Air Barrier

- ☐ All gaps in the raised floor between conditioned and unconditioned space (or to outside) filled with foam or caulk.
- ☐ All openings under a tub where the drain penetrates the floor sealed
- ☐ Garage band joist must be air tight at bays adjoining conditioned space

Walls

- ☐ All gaps around the windows caulked
- ☐ All gaps in exterior wall sheathing between conditioned and unconditioned space (or to outside) filled with foam or caulk
- ☐ All gaps in sheathing between conditioned space and the garage, attic, or covered patio filled with foam or caulk
- ☐ All other penetrations or cracks between conditioned and unconditioned space (the exterior of the home) sealed with foam or caulk

HVAC

Ensure that the following are sealed with an approved UL 181 mastic or tape:

Duct Work

- ☐ All register boot seams
- ☐ Return seams
- ☐ Return and supply collars
- ☐ Duct collars
- ☐ Duct board, T and Y seams

Furnace

- ☐ FAU seams
- ☐ FAU door
- ☐ Coil box is air tight including seams, condensate line, knockouts, and lineset.
- ☐ Supply and return plenums

Site Address:	Enforcement Agency:	Permit Number:

1b. Final Inspection Checklist

All gaps and penetrations in the drywall must be caulked or gasketed. All gaps and penetrations in the exterior sheathing must be caulked or gasketed. Some examples are:

Ceiling Penetrations

- ☐ All HVAC register boots are sealed to the drywall with caulking or tape
- ☐ All returns are sealed to the drywall
- ☐ All lighting fixtures are sealed to the drywall with a gasket, caulking or tape
- ☐ Any other penetrations to the drywall (for example fire sprinklers, whole house fans, surround sound speakers, ceiling outlet box etc.) are sealed with caulk or tape
- ☐ Attic access door is installed with weather stripping

Wall Penetrations

- ☐ All electrical outlets and switches are installed and sealed
- ☐ Any other penetrations to the drywall or exterior walls are sealed

General Inspections

- ☐ Flooring is installed
- ☐ Weather stripping is installed on doors and windows
- ☐ Exhaust fan dampers for kitchen and bath fans installed and working

2. Building Envelope Leakage Test

Diagnostic Testing Results					
	✓	✓	Building Envelope Leakage (CFM @ 50 Pa) as measured by Rater:		
1.	☐ Yes	☐ No	Is Measured envelope leakage less than or equal to the required level from CF-1R?		
2.	☐ Yes	☐ No	Is Mechanical Ventilation shown as required on the CF-1R?		
2a.	☐ Yes	☐ No	If Mechanical Ventilation is required on the CF-1R ('Yes' in line 2), has it been installed?		
2b.	☐ Yes	☐ No	Check this box 'yes' if mechanical ventilation is required ('Yes' in line 2) and ventilation fan watts are no greater than shown on CF-1R. Measured Watts =		
3.	☐ Yes	☐ No	Check this box "yes" if measured building infiltration (CFM @ 50 Pa) is greater than the CFM @ 50 values shown for an SLA of 1.5 on CF-1R (If this box is checked no, mechanical ventilation is required.)		
4.	☐ Yes	☐ No	Check this box "yes" if measured building infiltration (CFM @ 50 Pa) is less than the CFM @ 50 values shown for an SLA of 1.5 on CF-1R, mechanical ventilation is installed, and house pressure is greater than minus 5 Pascal with all exhaust fans operating.		
			Pass if: a. Yes in line 1 and line 3, or b. Yes in line 1 and line2, 2a, and 2b, or c. Yes in line 1 and Yes in line 4. Otherwise fail.	✓ ☐ Pass	✓ ☐ Fail

Site Address:	Enforcement Agency:	Permit Number:

DECLARATION STATEMENT

- I certify under penalty of perjury, under the laws of the State of California, the information provided on this form is true and correct.
- I am eligible under Division 3 of the Business and Professions Code to accept responsibility for construction, or an authorized representative of the person responsible for construction (responsible person).
- I certify that the installed features, materials, components, or manufactured devices identified on this certificate (the installation) conforms to all applicable codes and regulations, and the installation is consistent with the plans and specifications approved by the enforcement agency.
- I understand that a HERS rater will check the installation to verify compliance, and that that if such checking identifies defects, I am required to take corrective action at my expense. I understand that Energy Commission and HERS provider representatives will also perform quality assurance checking of installations, including those approved as part of a sample group but not checked by a HERS rater, and if those installations fail to meet the requirements of such quality assurance checking, the required corrective action and additional checking/testing of other installations in that HERS sample group will be performed at my expense.
- I reviewed a copy of the Certificate of Compliance (CF-1R) form approved by the enforcement agency that identifies the specific requirements for the installation. I certify that the requirements detailed on the CF-1R that apply to the installation have been met.
- **I will ensure that a completed, signed copy of this Installation Certificate shall be posted, or made available with the building permit(s) issued for the building, and made available to the enforcement agency for all applicable inspections. I understand that a signed copy of this Installation Certificate is required to be included with the documentation the builder provides to the building owner at occupancy.** I will ensure that all Installation Certificates will come from a HERS provider data registry for multiple orientation alternatives, and beginning October 1, 2010, for all low-rise residential buildings.

Company Name: (Installing Subcontractor or General Contractor or Builder/Owner)		
Responsible Person's Name:		Responsible Person's Signature:
CSLB License:	Date Signed:	Position With Company (Title):

HERS Provider: _____ *Registration Number:* _____ *Registration Date:* _____

1. Quality Insulation Installation (QII) Framing Stage Checklist

Air barrier and preparation for insulation verification inspection must be done at framing stage before insulation is installed. If there are any "No" answers rows not filled out or signatures missing then this is not valid form and cannot be accepted by the building department or HERS rater. If spray foam is used, then an air barrier is not required and NA would be checked. QII credit not allowed if any steel framing in the building including structural framing.

✓ **FLOOR AIR BARRIER**			
☐ Yes	☐ No	☐ NA	All gaps in the raised floor to unconditioned space or to outside larger than 1/8" filled with foam or caulk. (NA if SPF)
☐ Yes	☐ No	☐ NA	All openings on a second floor including under a tub where the drain penetrates the floor are sealed
✓ ***WALLS AIR BARRIER***			
☐ Yes	☐ No	☐ NA	All gaps in wall exterior sheathing to unconditioned space or to outside larger than 1/8" filled with foam or caulk. (NA if SPF)
☐ Yes	☐ No	☐ NA	No gaps in sheathing against the garage, attic, or covered patio. All gaps larger than 1/8" filled with foam or caulk. (NA if SPF)
☐ Yes	☐ No	☐ NA	All gaps in Rim-joists in interior and exterior walls to the outside including holes drilled for electrical and plumbing larger than 1/8" filled with foam or caulk. (NA if SPF)
☐ Yes	☐ No	☐ NA	Rope caulk, foam gasket, or caulking bead around the entire sole plate of the home
☐ Yes	☐ No	☐ NA	All gaps around the windows are caulked or foamed (stuffing with fiberglass not acceptable)
✓ **ROOF/CEILING INSPECTION**			
☐ Yes	☐ No	☐ NA	Attic rulers appropriate to the material installed **evenly** throughout the attic to verify depth. (NA if SPF or batt)
☐ Yes	☐ No	☐ NA	Attic area (sqft) _____ ÷ 250 = _____ minimum number of rulers installed. Must round up. Number of rulers actually installed _____(NA if SPF or batt)
☐ Yes	☐ No	☐ NA	ALL rulers visible from attic access. (NA if SPF or batt)
☐ Yes	☐ No	☐ NA	Eave vents baffles installed at all eave vents to prevent air movement under or into insulation. (NA if SPF)
☐ Yes	☐ No	☐ NA	Area of eave vent baffle is the same or larger than the net free-ventilation area of the eave vent. (NA if SPF)
✓ **ROOF/CEILING AIR BARRIER**			
☐ Yes	☐ No	☐ NA	All draft stops in place to form a continuous ceiling air barrier no gaps larger than 1/8". (NA if SPF)
☐ Yes	☐ No	☐ NA	**All** drops covered with hard covers. Gaps around or in the hard cover larger than 1/8" filled with foam or caulk. (NA if SPF).
☐ Yes	☐ No		All recessed light fixtures in non conditioned space are IC rated and air tight (AT)
☐ Yes	☐ No		All recessed light fixtures are sealed with a gasket or caulk between the housing and the ceiling
☐ Yes	☐ No		Openings around flue shafts fully sealed with solid blocking or flashing and any remaining gaps sealed with fire-rated caulk or sealant.
☐ Yes	☐ No		Piping shaft openings fully sealed and caulked
☐ Yes	☐ No		Penetrations from wiring sealed with caulk or sealant
☐ Yes	☐ No		All duct chases, fireplace chases, and double walls sealed air tight at the ceiling level. All gaps into shafts larger than 1/8" filled with foam or caulk. Special attention paid to ducts entering shafts from ceiling.

✓ **GARAGE ROOF/CEILING AIR BARRIER FOR TWO STORIES (no conditioned space over garage)**			
☐ Yes	☐ No	☐ NA	Air barrier installed at joists in garage to house transition. No gaps larger than 1/8" allowed. Use of SPF satisfies the requirement to seal the gaps.
✓ **GARAGE ROOF/CEILING AIR BARRIER FOR TWO STORIES (conditioned space over garage)**			
☐ Yes	☐ No	☐ NA	If insulation is to be installed at subfloor then subfloor has no gaps over 1/8". Air barrier installed at joists in garage to house transition. Use of SPF satisfies the requirement to seal the gaps.
☐ Yes	☐ No	☐ NA	If insulation is to be installed at ceiling of garage then ceiling and joists to the outside have no gaps over 1/8". (NA if SPF or no conditioned space over garage.)

DECLARATION STATEMENT

- I certify under penalty of perjury, under the laws of the State of California, the information provided on this form is true and correct.
- All rows in this document have been checked and all answers are yes or NA
- I am eligible under Division 3 of the Business and Professions Code to accept responsibility for construction, or an authorized representative of the person responsible for construction (responsible person).
- I certify that the installed features, materials, components, or manufactured devices identified on this certificate (the installation) conforms to all applicable codes and regulations, and the installation is consistent with the plans and specifications approved by the enforcement agency.
- I understand that a HERS rater will check the installation to verify compliance, and that that if such checking identifies defects, I am required to take corrective action at my expense. I understand that Energy Commission and HERS provider representatives will also perform quality assurance checking of installations, including those approved as part of a sample group but not checked by a HERS rater, and if those installations fail to meet the requirements of such quality assurance checking, the required corrective action and additional checking/testing of other installations in that HERS sample group will be performed at my expense.
- I reviewed a copy of the Certificate of Compliance (CF-1R) form approved by the enforcement agency that identifies the specific requirements for the installation. I certify that the requirements detailed on the CF-1R that apply to the installation have been met.
- **I will ensure that a completed, signed copy of this Installation Certificate shall be posted, or made available with the building permit(s) issued for the building, and made available to the enforcement agency for all applicable inspections. I understand that a signed copy of this Installation Certificate is required to be included with the documentation the builder provides to the building owner at occupancy.** I will ensure that all Installation Certificates will come from a HERS provider data registry for multiple orientation alternatives, and beginning October 1, 2010, for all low-rise residential buildings.

Company Name: (Installing Subcontractor or General Contractor or Builder/Owner)		
Responsible Person's Name:		Responsible Person's Signature:
CSLB License:	Date Signed:	Position With Company (Title):

Registration Number: _____ *Registration Date/Time:* _____ *HERS Provider:* _____

INSTALLATION CERTIFICATE		CF-6R-ENV-22-HERS
Quality Insulation Installation (QII) - Insulation Stage Checklist		**(Page 1 of 3)**
Site Address:	**Enforcement Agency:**	**Permit Number:**

QII credit not allowed if any steel framing in the building including structural framing.			
Insulation Stage Checklist ✓ FLOOR INSULATION			
☐ Yes	☐ No	☐ NA	All floor joist cavity insulation installed to uniformly fit the cavity side-to-side and end-to-end. (NA if floors slab on grade).
☐ Yes	☐ No	☐ NA	Insulation in full contact with the subfloor, NO gaps. (NA if floors are slab on grade).
☐ Yes	☐ No	☐ NA	Insulation in contact with air barrier on all five sides. (ends, sides, back). NA if floors are slab on grade.
☐ Yes	☐ No	☐ NA	Batts cut to fit around wiring and plumbing, or split (delaminated). (NA if loose fill, SPF, or slab on grade).
☐ Yes	☐ No	☐ NA	Batt insulation has continuous support. (NA if loose fill, SPF, or slab on grade).
☐ Yes	☐ No	☐ NA	SPF (Spray Polyurethane Foam Medium Density) insulation the average thickness is equal to or greater than that listed on the CF-1R and the minimum thickness shall be no more than ½ inch less than the required thickness for the R-value. (NA for other forms of insulation).
☐ Yes	☐ No		Insulation R-value same or greater than listed on the CF-1R.
☐ Yes	☐ No	☐ NA	SPF insulation properly adhered to avoid gaps and provide an air seal (NA for other forms of insulation)
☐ Yes	☐ No	☐ NA	For **SPF** list the required floor cavity R-value from CF-1R, R=_____ List tested average depth of insulation (inches) ____ X 5.8 (R-value/inch for medium density SPF) = _____ (R-value). This is the installed R-value and must be equal to or greater than listed on CF-1R (NA for other forms of insulation)

✓ **WALL INSULATION**			
☐ Yes	☐ No	☐ NA	Standard depth cavities insulation fills cavity and touches air barrier on all six sides. (NA if SPF used and meets the required R-value).
☐ Yes	☐ No	☐ NA	All double walls and bump-outs, the insulation fills the cavity or additional air barrier installed so that the insulation fills the cavity. Insulation touches all six sides. (NA if SPF used and meets the required R-value).
☐ Yes	☐ No		Behind tub/shower, walls under stairs, and fireplace, insulation touches air barrier on five sides. Not required to fill the space. Cavity required to be air tight.
☐ Yes	☐ No	☐ NA	**BATTS**, not a single void/depression deeper than ¾" in ANY stud bay. (NA if loose fill or SPF)
☐ Yes	☐ No	☐ NA	**BATTS**, voids/depressions less than 3/4" allowed as long as the area is not greater than 10% of the surface area for each stud bay. (NA if loose fill or SPF).
☐ Yes	☐ No	☐ NA	**Loose Fill** no gaps or voids of any depth allowed. (NA if batts or SPF).
☐ Yes	☐ No	☐ NA	SPF insulation properly adhered to avoid gaps and provide an air seal (NA for other forms of insulation)
☐ Yes	☐ No		Any gaps between studs or insulation larger than 1/8" must be filled with insulation or foam.
☐ Yes	☐ No		All Rim-joists to the outside insulated.
☐ Yes	☐ No		Special attention must be paid to corner channels, wall intersections, and behind tub/shower enclosures insulated to proper R-Value.
☐ Yes	☐ No	☐ NA	All skylight shafts and attic kneewalls insulated with minimum R-19.
☐ Yes	☐ No	☐ NA	Insulation in **full** contact with drywall or wall finishes of skylight shafts and attic kneewalls.

☐ Yes	☐ No		Wall insulation same or better than what is listed on the CF-1R.
☐ Yes	☐ No	☐ NA	SPF list the required wall cavity R-value from CF-1R, R-_____. List tested average depth of insulation (inch) ____ X 5.8 (R-value/inch for medium density SPF) = _____ (R-value) This is the installed R-value and must be equal to or greater than listed on CF-1R (NA for other forms of insulation)
☐ Yes	☐ No	☐ NA	SPF (Spray Polyurethane Foam Medium Density) insulation the average thickness is equal to or greater than that listed on the CF-1R and the minimum thickness shall be no more than ½ inch less than the required thickness for the R-value. (NA for other forms of insulation)

✓ **ROOF/CEILING INSULATION**			
☐ Yes	☐ No		**BATTS** there must not be a single gap/void/depression deeper than ¾”. (NA if loose fill or SPF).
☐ Yes	☐ No		**BATTS** voids/depressions less than 3/4" allowed as long as the area is not greater than 10% of the surface area for each stud bay. (NA if loose fill or SPF).
☐ Yes	☐ No	☐ NA	**NO** gaps or voids allowed for loose fill and SPF. (NA if batts).
☐ Yes	☐ No		All ceiling insulation installed to uniformly fit the cavity side-to-side and end-to-end.
☐ Yes	☐ No		Insulation in full contact with the ceiling, **NO** gaps.
☐ Yes	☐ No		Insulation in contact with air barrier on all five sides.
☐ Yes	☐ No	☐ NA	**Batts** cut to fit around wiring and plumbing, or split (delaminated). (NA for loose fill or SPF).
☐ Yes	☐ No	☐ NA	**Batts** taller than the trusses must expand so that they touch each other over the trusses. (NA for loose fill or SPF).
☐ Yes	☐ No	☐ NA	SPF insulation properly adhered to avoid gaps and provide an air seal (NA for other forms of insulation)
☐ Yes	☐ No	☐ NA	Insulation fully fills cavity below any plywood platform or cat-walk. If SPF used then minimum 3 inches. (NA if no platforms or cat-walks)
☐ Yes	☐ No		Attic access gasketed
☐ Yes	☐ No		Attic access insulated with rigid foam or batt insulation using adhesive or mechanical fastener. R-value same as ceiling R-value listed on CF-1R
☐ Yes	☐ No		Recessed light fixtures covered full depth with insulation. If SPF used then other forms of insulation used to cover or enclosed in a box fabricated from ½-inch plywood, 18 ga. sheet metal, 1/4-inch hard board or drywall
☐ Yes	☐ No		Roof insulation same or better than what is listed on the CF-1R
☐ Yes	☐ No	☐ NA	**Loose Fill** Insulation at proper depth – insulation rulers visible and indicating proper depth and R-value for blown in insulation. (NA for batts or SPF).
☐ Yes	☐ No	☐ NA	**Loose Fill** Insulation **uniformly** covers the entire ceiling (or roof) area from outside of all exterior walls. (NA for batts or SPF).
☐ Yes	☐ No	☐ NA	Loose-fill insulation meets or exceeds manufacturer's minimum weight and thickness requirements for the target R-value. Target R-value. Manufacturer’s minimum required weight for the target R-value (pounds-per-square-foot). Manufacturer's minimum required thickness at time of installation. Manufacturer's minimum required settled thickness. Note: To receive compliance credit the HERS rater shall verify that the manufacturer's minimum weight and thickness has been achieved for the target R-value. (NA for batts or SPF).

☐ Yes	☐ No	☐ NA	**SPF** list the required ceiling cavity R-value from CF-1R, R-_____. List tested average depth of insulation____ in X 5.8R = _____ R this is the installed R-value and must be equal to or greater than listed on CF-1R (NA for other forms of insulation)
☐ Yes	☐ No	☐ NA	SPF insulation must be covered with other forms of insulation or enclosed in a box fabricated from ½ inch plywood, 18 gauge metal, ¼ inch hard board or drywall. The exterior of the box may then be insulated with SPF.
☐ Yes	☐ No	☐ NA	SPF insulation the average thickness is equal to or greater than that listed on the CF-1R and the minimum thickness shall be no more than ½ inch less than the required thickness for the R-value. (NA for other forms of insulation)
✓ **GARAGE ROOF/CEILING INSULATION FOR TWO STORIES (no conditioned space over garage)**			
☐ Yes	☐ No	☐ NA	Insulation installed at joists against the air barrier in the garage to house transition. All wall insulation requirements above must be met. (NA if conditioned space over garage).
✓ **GARAGE ROOF/CEILING INSULATION FOR TWO STORIES(conditioned space over garage)**			
☐ Yes	☐ No	☐ NA	If insulation is to be installed at subfloor then the insulation must **also** be installed at joists against the air barrier in the garage to house transition. All ceiling and wall insulation requirements above must be met. (NA if no conditioned space over garage).
☐ Yes	☐ No	☐ NA	If insulation is to be installed at ceiling of garage then the joists to the outside must be insulated and all the insulation requirements listed above must be met. (NA if no conditioned space over garage).

DECLARATION STATEMENT

- I certify under penalty of perjury, under the laws of the State of California, the information provided on this form is true and correct.
- I have read the High Quality Insulation Installation Procedures (Residential Appendix, RA3.5), understand these procedures, and understand that there are additional requirements than must be met than those listed on this CF-6R.
- All rows in this document have been checked and all answers are yes or NA
- I am eligible under Division 3 of the Business and Professions Code to accept responsibility for construction, or an authorized representative of the person responsible for construction (responsible person).
- I certify that the installed features, materials, components, or manufactured devices identified on this certificate (the installation) conforms to all applicable codes and regulations, and the installation is consistent with the plans and specifications approved by the enforcement agency.
- I understand that a HERS rater will be checking the installation and that if such checking identifies defects, I am required to take corrective action at my expense. If the installation is part of a sample group for HERS verification, and the installation fails to meet the requirements of such quality assurance checking, additional checking/testing and repair of other installations in the HERS sample group will be required at my expense. I understand that the HERS provider, and Energy Commission representatives will also be performing checks of the installation on jobs not tested by the HERS rater.
- I reviewed a copy of the Certificate of Compliance (CF-1R) form approved by the enforcement agency that identifies the specific requirements for the installation. I certify that the requirements detailed on the CF-1R that apply to the installation have been met.
- **I will ensure that a completed, signed copy of this Installation Certificate shall be posted, or made available with the building permit(s) issued for the building, and made available to the enforcement agency for all applicable inspections. I understand that a signed copy of this Installation Certificate is required to be included with the documentation the builder provides to the building owner at occupancy.** I will ensure that all Installation Certificates will come from a HERS provider data registry for multiple orientation alternatives and on October 1, 2010, for all low-rise residential buildings.

Company Name: (Installing Subcontractor or General Contractor or Builder/Owner)		
Responsible Person's Name:		Responsible Person's Signature:
CSLB License	Date Signed:	Position With Company (Title):

Registration Number: _____ *Registration Date/Time:* _____ *HERS Provider:* _____

1. Kitchen Lighting

Does project include kitchen lighting?

☐ Yes, complete section 1 ☐ No, go on to section 2	
☐ Yes	§150(k)3: The wattage of permanently installed luminaires (lighting fixtures) has been determined as specified by §130(d).
☐ Yes ☐ No	§150(k)3: In the kitchen, are there electrical boxes finished with a blank cover or where no electrical equipment has been installed, and where the electrical box can be used for a luminaire or a surface mounted ceiling fan? If yes, the following must also be yes:
☐ Yes ☐ NA	Wattage has been calculated as 180 watts of low efficacy lighting per blank electrical box.

§150(k)8 Kitchen Lighting must comply with either method (a), (b), or (c) below:

(a) All high efficacy luminaires

☐ Yes, complies because only high efficacy luminaires have been installed in the kitchen.
☐ No, complies with method (b) or (c).

(b) ≥ 50% watts used by high efficacy luminaires

☐ Yes, complies because at least 50% of the installed watts are from permanently installed high efficacy luminaires as demonstrated in the table below: Total A ≥ Total B.
☐ No, complies with method (a) or (c).

Fill out the following table if complying with either method (b) or (c).

Table (b)

Luminaire Type	Efficacy High	Efficacy Low	Watts	x	Quantity	=	High Efficacy Watts	or	Low Efficacy Watts
	☐	☐		x		=		or	
	☐	☐		x		=		or	
	☐	☐		x		=		or	
	☐	☐		x		=		or	
	☐	☐		x		=		or	
Complies with method (b) if A ≥ B					Total:	A:		≥	B:

(c) Additional Kitchen Low Efficacy Lighting

☐ Yes, complies because the kitchen lighting qualifies for additional low efficacy lighting and as demonstrated in table in (b) (above) and the table in (c) (below) that (A + C) ≥ B
☐ No, complies with method (a) or (b).

Additional kitchen low efficacy lighting is available only if all of the following are true:

☐ Yes. All low efficacy luminaires in the kitchen are controlled by a vacancy sensor Dimmer energy management control system (EMCS) or a multi-scene programmable control system.
☐ Yes. Permanently installed luminaires in garages laundry rooms closets greater than 70 square feet and utility rooms are high efficacy luminaires AND are controlled by a vacancy sensor.

Table (c)

From the Table in (b)		Use 50 W for dwelling units ≤ 2,500 ft^2 Use 100 W for dwelling units > 2,500 ft^2	Add	Yes/No ?
A	B	C	A + C	Is (A+C) ≥ B ?

2. Lighting Internal to Cabinets

Does project includes lighting internal to cabinets?

☐ Yes, complete section 2 ☐ No, go on to section 3
☐ Yes, §150(k)9: Permanently installed lighting internal to cabinets uses ≤ 20 watts of power per linear foot of illuminated cabinet.

3. Installed Devices and Components Have Been Certified to the Energy Commission

Does the project include any of the devices or components listed below? ☐ **Yes, complete section 3** ☐ **No, go on to section 4**

☐ Yes	§119 and §150(k)7(F): Any of the following devices and components which have been installed have been certified to the Energy Commission according to the applicable provisions of §119: All LED lighting systems that have been classified as high efficacy ballasts used in recessed luminaires vacancy sensors (automatic off/manual on occupant sensors) dimmers track lighting integral current limiters and outdoor motion sensors.

4. Lighting Controls Complete section 4

☐ Yes ☐ NA	§150(k)7A: Permanently installed low efficacy luminaires are controlled by switches separate from those controlling high efficacy luminaires.
☐ Yes ☐ NA	§150(k)7B: Exhaust fans with integral lighting systems are switched separately from lighting systems, OR have a lighting system that can be manually turned on and off while allowing the fan to continue to operate for an extended period of time.
☐ Yes ☐ NA	§150(k)7C: All permanently installed luminaires are switched with readily accessible controls that permit the luminaires to be manually switched on and off.
☐ Yes ☐ NA	§150(k)7D: All lighting controls have been installed in accordance with the manufacturer's instructions.
☐ Yes ☐ NA	§150(k)7E: All lighting circuits that are controlled by more than one switch, where a dimmer or vacancy sensor has been installed to comply with §150(k), no controls bypass the dimmer or vacancy sensor functions.

5. Luminaires (Lighting Fixtures)

Does the project include the installation of any luminaires (indoor or outdoor)?

☐ Yes, complete section 5 ☐ No, go on to section 6	
☐ Yes, high efficacy luminaire classification has been determined according to §150(k)1, and low efficacy luminaire classification has been determined according to §150(k)2.	
☐ Yes ☐ NA	§150(k)4: Fluorescent lamps rated 13 watts or greater have an electronic ballasts having an output frequency no less than 20 kHz.
☐ Yes ☐ NA	§150(k)5: Permanently installed night lights, and night lights integral to permanently installed luminaires or exhaust fans, contain only high efficacy lamps meeting the minimum efficacies contained in Table 150-C and do not contain a line-voltage socket or line voltage lamp holder, OR the night light is rated to consume no more than 5 watts of power and does not contain a medium screw-base socket.
☐ Yes ☐ NA	§150(k)6: Lighting integral to exhaust fans, in rooms other than kitchens, meet the applicable requirements of §150(k).
☐ Yes ☐ NA	Any electrical box finished with a blank cover or where no electrical equipment has been installed, and where the electrical box can be used for a luminaire or a surface mounted ceiling fan, has been treated as low efficacy luminaires for compliance with §150(k).

Does the project include any luminaires that are recessed into insulated ceilings?

☐ Yes, complete the rest of section 5 ☐ No, go on to section 6	
☐ Yes, §150(k)12: Luminaires that are recessed into insulated ceilings meet all of the following conditions:	
	☐ Yes, are listed, as defined in §101, for zero clearance insulation contact (IC) by UL or other nationally recognized testing/rating laboratory, and
	☐ Yes, have labels that certify the luminaires are airtight with air leakage less than 2.0 CFM at 75 Pascals when tested in accordance with ASTM E283 (Exhaust fan housings are not required to be certified airtight), and
	☐ Yes, are sealed with a gasket or caulk between luminaire housings and the ceiling, and all air leak paths between conditioned and unconditioned spaces have been sealed with a gasket or caulk. (including all exhaust fan housings), and
	☐ Yes, allows ballast maintenance and replacement to be readily accessible to building occupants from below the ceiling without requiring the cutting of holes in the ceiling.

6. Indoor Lighting (any indoor room that is not a kitchen)

Does the project include permanently installed luminaires in any room that is not a kitchen?

☐ Yes, complete section 6 ☐ No, go on to section 7	
☐ Yes ☐ NA	§150(k)10: Permanently installed luminaires in bathrooms, garages, laundry rooms, closets > 70 ft^2, and utility rooms are high efficacy luminaires OR are controlled by a vacancy sensor.
☐ Yes ☐ NA	§150(k)11: Permanently installed luminaires located in rooms or areas other than in kitchens, bathrooms, garages, laundry rooms, closets, and utility rooms are high efficacy luminaires, OR are controlled by a dimmer switch OR are controlled by a vacancy sensor.

7. Outdoor Lighting

Does the project include any permanently installed outdoor lighting?

☐ Yes, complete section 7 ☐ No, go on to section 8	
☐ Yes ☐ NA	§150(k)13: Luminaires providing outdoor lighting, including outdoor lighting for private patios on low-rise residential buildings with four or more dwelling units, entrances, balconies, and porches, and which are permanently mounted to a residential building or to other buildings on the same lot are high efficacy luminaires OR are controlled by a manual on/off switch, plus a motion sensor not having an override or bypass switch that disables the motion sensor, plus one of the following three additional control methods:
	a. A photocontrol that does not have an override or bypass switch that disables the photocontrol; or
	b. An astronomical time clock not having an override or bypass switch that disables the astronomical time clock; or
	c. Energy management controls systems (EMCS) not having an override or bypass switch that allows the luminaire to be always on.
☐ Yes ☐ NA	**Exception 2**: Low efficacy outdoor luminaires used to comply with Exception 1 to §150(k)13 are controlled by an override switch which temporarily bypasses the motion sensing function, and the motion sensor is automatically reactivated within six hours. The luminaire is controlled by a photocontrol, astronomical time clock, or EMCS as required by Exception 1 to §150(k)13.
☐ Yes ☐ NA	**Exception 3**: There are permanently installed luminaires in or around swimming pools, water features, or other locations subject to Article 680 of the California Electric Code which do not need to be high efficacy luminaires.
☐ Yes ☐ NA	§150(k)14: Internally illuminated address signs comply with §148, OR do not contain a screw-base socket and consume no more than 5 watts of power as determined according to §130(d).
☐ Yes ☐ NA	§150(k)15 Lighting for parking lots and carports with a total of 8 or more vehicles per site have lighting that complies with §130,132, 134, and 147. Lighting for parking garages for 8 or more vehicles comply with §130, 131, 134, and 146.

8. Common areas of low-rise residential buildings

Does the project include the installation of any luminaires in common areas of low-rise residential buildings?

☐ Yes, complete section 8 ☐ No, go on to section 9
☐ Yes, §150(k)16: Permanently installed lighting in the enclosed, non-dwelling spaces of low-rise residential buildings with four or more dwelling units shall be high efficacy luminaires OR are controlled by occupant sensor(s) certified to comply with §119(d).

DECLARATION STATEMENT

- I certify under penalty of perjury, under the laws of the State of California, the information provided on this form is true and correct.
- I am eligible under Division 3 of the Business and Professions Code to accept responsibility for construction, or an authorized representative of the person responsible for construction (responsible person).
- I certify that the installed features, materials, components, or manufactured devices identified on this certificate (the installation) conforms to all applicable codes and regulations, and the installation is consistent with the plans and specifications approved by the enforcement agency.
- I reviewed a copy of the Certificate of Compliance (CF-1R) form approved by the enforcement agency that identifies the specific requirements for the installation. I certify that the requirements detailed on the CF-1R that apply to the installation have been met.
- **I will ensure that a completed, signed copy of this Installation Certificate shall be posted, or made available with the building permit(s) issued for the building, and made available to the enforcement agency for all applicable inspections. I understand that a signed copy of this Installation Certificate is required to be included with the documentation the builder provides to the building owner at occupancy.**

Company Name: (Installing Subcontractor or General Contractor or Builder/Owner)		
Responsible Person's Name:		Responsible Person's Signature:
CSLB License:	Date Signed:	Position With Company (Title):

INSTALLATION CERTIFICATE		CF-6R-MECH-01
Domestic Hot Water (DHW)		**(Page 1 of 2)**
Site Address:	**Enforcement Agency:**	**Permit Number:**

1. WATER HEATING SYSTEMS:

Heater Type	CEC Certified Mfr Name & Model Number	Distribution Type (Std, Point-of-Use, etc)	If Recirculation, Control Type	# of Identical Systems	Rated Input (kW or Btu/hr)[1]	Tank Volume (gallons)	Efficiency (EF, RE)[1]	Standby Loss (%)[1]

*Note 1: For **small gas storage** (rated input less than or equal to 75,000 Btu/hr), **electric resistance** and **heat pump water heaters**, list Energy Factor (EF). For **large gas storage water heaters** (rated input of greater than 75,000 Btu/hr), list Recovery Efficiency (RE), Thermal Efficiency, Standby Loss and Rated Input. For **instantaneous gas water heaters**, list the Thermal Efficiency and Rated Input.*

2. Mandatory Measures

TO COMPLY - ALL BOXES MUST BE CHECKED

☐ §110-§113: Water heaters, showerhead and faucets are certified by the California Energy Commission.

§150(j): Water System Pipe and Tank Insulation. And Cooling Line Insulation

1. Storage tank insulation

☐ A. Storage gas water heaters rated with an Energy Factor no greater than the federal minimal standard are externally wrapped with insulation having an installed thermal resistance of R-12 or greater; and

☐ B. Unfired storage tanks or other indirect hot water tanks have R-12 external insulation or R-16 internal insulation where the internal insulation R-value is indicated on the exterior of the tank.

2. Water piping and cooling system line insulation thickness and conductivity

☐ First 5 feet of hot and cold water pipes closest to water heater tank, non-recirculating systems, and entire length of recirculating sections of hot water pipes are insulated per Standards Table 150-B; and

☐ Pipe insulation for steam hydronic heating systems or hot water systems >15 psi, meets the requirements of Standards Table 123-A.

☐ Insulation is protected from damage, including that due to sunlight, moisture, equipment maintenance, and wind.

☐ §151(f)8D: If indicated on the CF-1R, all hot water piping that runs from the hot water source to the kitchen fixtures is insulated per Standards Table 150-B.

3. Central Water Heating in Buildings with Multiple Dwelling Units (required for prescriptive)

TO COMPLY - ALL BOXES MUST BE CHECKED

- ☐ All hot water piping in main circulating loop is insulated to requirements of §150(j)
- ☐ Central hot water systems serving six or fewer dwelling units which have (1) less than 25' of distribution piping outdoors; (2) zero distribution piping underground; (3) no recirculation pump; and (4) insulation on distribution piping that meets the requirements of Section 150(j)
- ☐ Central hot water systems serving more than 6 dwelling units - presence of either a time control or a time/temperature control

DECLARATION STATEMENT

- I certify under penalty of perjury, under the laws of the State of California, the information provided on this form is true and correct.
- I am eligible under Division 3 of the Business and Professions Code to accept responsibility for construction, or an authorized representative of the person responsible for construction (responsible person).
- I certify that the installed features, materials, components, or manufactured devices identified on this certificate (the installation) conforms to all applicable codes and regulations, and the installation is consistent with the plans and specifications approved by the enforcement agency.
- I reviewed a copy of the Certificate of Compliance (CF-1R) form approved by the enforcement agency that identifies the specific requirements for the installation. I certify that the requirements detailed on the CF-1R that apply to the installation have been met.
- **I will ensure that a completed, signed copy of this Installation Certificate shall be posted, or made available with the building permit(s) issued for the building, and made available to the enforcement agency for all applicable inspections. I understand that a signed copy of this Installation Certificate is required to be included with the documentation the builder provides to the building owner at occupancy.**

Company Name: (Installing Subcontractor or General Contractor or Builder/Owner)		
Responsible Person's Name:		Responsible Person's Signature:
CSLB License:	Date Signed:	Position With Company (Title):

INSTALLATION CERTIFICATE		CF-6R-MECH-02
Solar Domestic Hot Water Systems (SDHW)		**(Page 1 of 1)**
Site Address:	**Enforcement Agency:**	**Permit Number:**

SOLAR HOT WATER HEATING SYSTEMS:

SRCC Certified Mfr Name & Model Number	Net Solar Fraction (from attached CEC F-Chart)	# of Collectors in System	Collector Size	Solar Tank Volume (gallons)

- ☐ §150(j)1B: Backup storage tanks for solar water-heating systems have R-12 external insulation or R-16 internal insulation where the internal insulation R-value indicated on the exterior of the tank.
- ☐ §150(j)2A: All solar piping shall be insulated.
- ☐ §150(j)4: Solar water-heating system and/or/collectors are certified by the Solar Rating and Certification Corporation.
- ☐ Solar water-heating systems storage is no less than the value used in the attached solar calculation sheet,
- ☐ Solar water-heating systems shall be installed at a slope equal to a pitch between 2-12 to 6-12.
- ☐ A solar water-heating system is installed at an orientation equal to value used in the attached solar calculation sheet, or within 45 degrees of true south.

DECLARATION STATEMENT

- I certify under penalty of perjury, under the laws of the State of California, the information provided on this form is true and correct.
- I am eligible under Division 3 of the Business and Professions Code to accept responsibility for construction, or an authorized representative of the person responsible for construction (responsible person).
- I certify that the installed features, materials, components, or manufactured devices identified on this certificate (the installation) conforms to all applicable codes and regulations, and the installation is consistent with the plans and specifications approved by the enforcement agency.
- I reviewed a copy of the Certificate of Compliance (CF-1R) form approved by the enforcement agency that identifies the specific requirements for the installation. I certify that the requirements detailed on the CF-1R that apply to the installation have been met.
- **I will ensure that a completed, signed copy of this Installation Certificate shall be posted, or made available with the building permit(s) issued for the building, and made available to the enforcement agency for all applicable inspections. I understand that a signed copy of this Installation Certificate is required to be included with the documentation the builder provides to the building owner at occupancy.**

Company Name: (Installing Subcontractor or General Contractor or Builder/Owner)		
Responsible Person's Name:		Responsible Person's Signature:
CSLB License:	Date Signed:	Position With Company (Title):

Pool and Spa Heating Systems requirements

§114(a): Systems and Equipment.

- ☐ 1. Heater has a thermal efficiency that complies with the Appliance Efficiency Regulations.
- ☐ 2. Has a readily accessible on-off switch mounted outside of the heater.
- ☐ 3. Weatherproof plate or card containing operating instructions for the pool or spa heater.
- ☐ 4. No electric resistance heating except for listed package units that has fully insulated enclosures and tight fitting covers that are insulated to at least R-6. Or if documentation is provided that at least 60 % of the annual heating energy is from site solar energy or recovered energy.
- ☐ 5. Heating system has no pilot light.

§114(b): Installation.

- ☐ 1. System is installed with at least 36" of pipe between the filter and heater, or dedicated suction and return lines, or built-in or built-up connections for future solar heating.
- ☐ 2. A cover for outdoor pools or spas that have a heat pump or gas heater.
- ☐ 3. Pool system has directional inlets to adequately mix the pool water
- ☐ 4. Time switch which will allow the pump to be set or programmed to run during off-peak periods only

§150(p) Pump Sizing and flow rate specification

- ☐ 1. The pump specified is listed in the CEC database of certified pool pumps.
- ☐ 2. The pump flow rate shall be calculated based on pool sizing table below.
- ☐ 3. The pump is capable of operating at 2 or more speeds (not applicable if pump is less than 1 horsepower).
- ☐ 4. Each auxiliary pool load is served by either a separate pump, or the system is served by a multi-speed pump.

Pool sizing (Values are based on a maximum allowable turnover rate of 6- hours)

Max Pool Volume (gallons)	Min Pipe D or Greater (inches)		Min Filter Area or more (square feet)			Max Pump Flow (gpm)
	Return	Suction	Cartridge	Sand	DE	
13,000	1.5	1.5	100	2.4	20	36
17,000	1.5	2	130	3.1	25	47
21,000	2	2	160	3.9	30	58
28,000	2	2.5	210	5.2	40	78
42,000	2.5	3	320	7.8	60	117
48,000	3	3	360	8.9	70	133

Note: *For pumps greater than 1 hp. The maximum Pump Flow is the lowest speed default filtration*

- ☐ 5. Calculated volume of pool_____ (gallons).
- ☐ 6. Return Pipe Diameter _____ (inches).
- ☐ 7. Suction Pipe Diameter_____ (inches).
- ☐ 8. Filter Type _____ (Cartridge, Sand, DE).
- ☐ 9. Filter Surface Area_____ (sf).
- ☐ 10. Max Pump Flow_____ (gpm).

System Piping

☐ 1. The suction side pipe is straight for at least 4 pipe diameters before entering the pump (See table below for the required straight run lengths for various pipe sizes).

☐ 2. The design uses low pressure drop fittings (sweep90's)

Pipe Diameter (inch)	Required Pipe Length leading into pump (inch)
1.5	6
2	8
2.5	10
3	12

Filtration Equipment

☐ 1. If a backwash valve is used: The diameter of the backwash multi-port valve is 2 inches or as large as the circulation pipe, whichever is greater

DECLARATION STATEMENT

- I certify under penalty of perjury, under the laws of the State of California, the information provided on this form is true and correct.
- I am eligible under Division 3 of the Business and Professions Code to accept responsibility for construction, or an authorized representative of the person responsible for construction (responsible person).
- I certify that the installed features, materials, components, or manufactured devices identified on this certificate (the installation) conforms to all applicable codes and regulations, and the installation is consistent with the plans and specifications approved by the enforcement agency.
- I reviewed a copy of the Certificate of Compliance (CF-1R) form approved by the enforcement agency that identifies the specific requirements for the installation. I certify that the requirements detailed on the CF-1R that apply to the installation have been met.
- **I will ensure that a completed, signed copy of this Installation Certificate shall be posted, or made available with the building permit(s) issued for the building, and made available to the enforcement agency for all applicable inspections. I understand that a signed copy of this Installation Certificate is required to be included with the documentation the builder provides to the building owner at occupancy.**

Company Name: (Installing Subcontractor or General Contractor or Builder/Owner)		
Responsible Person's Name:		Responsible Person's Signature:
CSLB License:	Date Signed:	Position With Company (Title):

INSTALLATION CERTIFICATE		CF-6R-MECH-04
Space Conditioning Systems, Ducts and Fans		**(Page 1 of 2)**
Site Address:	**Enforcement Agency:**	**Permit Number:**

Space Conditioning Systems

Heating Equipment

Equip Type (package-heat pump)	CEC Certified Mfr. Name and Model Number	ARI Reference Number [2]	# of Identical Systems	Efficiency (AFUE, etc.)[1, 3] (≥CF-1R value)[4]	Duct Location (attic, crawl-space, etc.)	Duct R-value	Heating Load (Btu/hr)	Heating Capacity (Btu/hr)

Cooling Equipment

Equip Type (package heat pump)	CEC Certified Mfr. Name and Model Number	ARI Reference Number [2]	# of Identical Systems	Efficiency (SEER and EER) [1, 3] (≥CF-1R value) [4]	Duct Location (attic, crawl-space, etc.)	Duct R-value	Cooling Load (Btu/hr)	Cooling Capacity (Btu/hr)

1. If project is new construction, see Footnotes to Standards Table 151-B and Table 151-C for duct ceiling alternative compliance.
2. ARI Reference Number can be found by entering the equipment model number at http://www.aridirectory.org/ari/ac.php#
3. Listed efficiency on this page must be greater than or equal (≥) to the value shown on the CF-1R form.
4. When CF-1R is reference it is also applicable to the CF-1R, CF-1R-AA or CF-1R-ALT

ALL BOXES MUST BE CHECKED TO BE A VALID FORM

- ☐ §110-§113: HVAC equipment is certified by the California Energy Commission.
- ☐ §150(h): Heating and/or cooling loads calculated in accordance with ASHRAE, SMACNA, or ACCA.
- ☐ §150(i): Setback Thermostat on all applicable heating and/or cooling systems meet the requirements of §112(c).
- ☐ §150(j)2: Pipe insulation for cooling system refrigerant suction, chilled water and brine lines meets minimum requirements of Table 150-B and includes a vapor retardant or is enclosed entirely in conditioned space.

Ducts and Fans

§150(m): Duct and Fans

☐ 1. All air-distribution system ducts and plenums installed, sealed and insulated to meet the requirements of CMC Sections 601, 602, 603, 604, 605 and Standard 6-5; supply-air and return-air ducts and plenums are insulated to a minimum installed level of R-4.2 or enclosed entirely in conditioned space. Openings shall be sealed with mastic, tape or other duct-closure system that meets the applicable requirements of UL 181, UL 181A, or UL 181B or aerosol sealant that meets the requirements of UL 723. If mastic or tape is used to seal openings greater than 1/4 inch, the combination of mastic and either mesh or tape shall be used; and

☐ 1. Building cavities, support platforms for air handlers, and plenums defined or constructed with materials other than sealed sheet metal, duct board or flexible duct shall not be used for conveying conditioned air. Building cavities and support platforms may contain ducts. Ducts installed in cavities and support platforms shall not be compressed to cause reductions in the cross-sectional area of the ducts.

☐ 2D. Joints and seams of duct systems and their components shall not be sealed with cloth back rubber adhesive duct tapes unless such tape is used in combination with mastic and draw bands.

☐ 7. Exhaust fan systems have back draft or automatic dampers.

☐ 8. Gravity ventilating systems serving conditioned space have either automatic or readily accessible, manually operated dampers.

☐ 9. Protection of Insulation. Insulation shall be protected from damage, including that due to sunlight, moisture, equipment maintenance, and wind. Cellular foam insulation shall be protected as above or painted with a coating that is water retardant and provides shielding from solar radiation that can cause degradation of the material.

☐ 10. Flexible ducts cannot have porous inner cores.

DECLARATION STATEMENT

- I certify under penalty of perjury, under the laws of the State of California, the information provided on this form is true and correct.
- I am eligible under Division 3 of the Business and Professions Code to accept responsibility for construction, or an authorized representative of the person responsible for construction (responsible person).
- I certify that the installed features, materials, components, or manufactured devices identified on this certificate (the installation) conforms to all applicable codes and regulations, and the installation is consistent with the plans and specifications approved by the enforcement agency.
- I reviewed a copy of the Certificate of Compliance (CF-1R) form approved by the enforcement agency that identifies the specific requirements for the installation. I certify that the requirements detailed on the CF-1R that apply to the installation have been met.
- **I will ensure that a completed, signed copy of this Installation Certificate shall be posted, or made available with the building permit(s) issued for the building, and made available to the enforcement agency for all applicable inspections. I understand that a signed copy of this Installation Certificate is required to be included with the documentation the builder provides to the building owner at occupancy.**

Company Name: (Installing Subcontractor or General Contractor or Builder/Owner)		
Responsible Person's Name:		Responsible Person's Signature:
CSLB License:	Date Signed:	Position With Company (Title):

Ventilation for Indoor Air Quality (IAQ): All dwelling units shall meet the requirements of ANSI/ASHRAE standard 62.2. Ref: Title 24 Part 6 Section 150(o). Equation and table numbering on this CF-6R corresponds to the numbering for that information in the published ASHRAE Standard 62.2.

WHOLE-BUILDING VENTILATION

Ventilation Rate: A mechanical supply system, exhaust system, or combination thereof shall provide whole-building ventilation with outdoor air each hour at no less than the rate in equation 4.1a. For dwelling occupant densities known to be greater than (N_{br} + 1), the rate shall be increased by 7.5 cfm for each additional person.

(Eq. 4.1a) $Q_{fan} = 0.01A_{floor} + 7.5(N_{br} + 1)$

Where:
A_{floor} = conditioned floor area, ft^2
N_{br} = number of bedrooms; not to be less than one
Q_{fan} = ventilation air requirement = fan flow rate, (cfm)

Enter Eq 4.1a Calculation:
A_{floor} =
N_{br} =
Q_{fan} =

Delivered Ventilation: The effective ventilation rate of an **intermittent** system is the combination of its delivered capacity, its fractional on-time, cycle time, and the ventilation effectiveness from Table 4.2. This calculation only applies to intermittent systems.

(Eq. 4.2) $Q_f = Q_r / (\varepsilon f)$

Where:
Q_r = ventilation air requirement from Eq. 4.1a (above)
f = daily fractional on-time, (%)
ε = ventilation effectiveness (from Table 4.2)
Q_f = fan flow rate during the on-cycle (cfm)

Enter Eq 4.2 Calculation (if applicable).
Q_r =
f =
ε =
Q_f =

Table 4.2 – Ventilation Effectiveness for Intermittent Fans

Daily Fractional On-Time, f	Ventilation effectiveness, ε
$f \leq 35\%$	0.33
$35\% \leq f < 60\%$	0.50
$60\% \leq f < 80\%$	0.75
$80\% \leq f$	1.0
Fan runs at least once every three hours	1.0

Whole-Building Ventilation Rate Summary

Select the method used to provide Whole-Building Ventilation and enter the required fan flow rate (cfm). Select one:

☐ Continuous fan flow (cfm) =_____

☐ Intermittent fan flow (cfm) =_____

Use the fan flow rate from this summary for selection of the whole-building ventilation fan and for the duct design for the whole-building ventilation system. Provide the system design information in applicable sections below.

LOCAL VENTILATION EXHAUST

Local mechanical exhaust fans shall be installed in each kitchen and bathroom. The minimum airflow rates shall be at least the amount indicated in tables 5.1 and 5.2.

Table 5.1
Intermittent Local Ventilation Exhaust Airflow Rates

Application	Airflow	Notes
Kitchen	100 cfm	Vented range hood required if exhaust fan flow is less than 5 ACH
Bathroom	50 cfm	

Table 5.2
Continuous Local Ventilation Exhaust Airflow Rates

Application	Airflow	Notes
Kitchen	5 ACH	Based on Kitchen Volume
Bathroom	20 cfm	

VENTILATION SYSTEM DESIGN – Fan selection and duct design criteria for compliance

The airflow rates required refer to the delivered airflow of the system as installed and tested using a flow hood, flow grid, or other airflow measuring device. Alternatively, the airflow rating at a pressure of 0.25 in. w.c. of a certified fan may be used to demonstrate compliance without testing of the airflow of the installed system, provided the system duct sizing meets the prescriptive requirements of Table 7.1, or manufacturer's design criteria. Other methods may be used to provide the required ventilation rates when approved by a licensed design professional, subject to confirmation of delivered ventilation airflow of the installed system. Central Fan Integrated (CFI) ventilation systems shall demonstrate compliance by field testing of the delivered ventilation airflow of the installed system.

WHOLE-BUILDING VENTILATION SYSTEM DESIGN - Identify the ventilation system design criteria		
(select one criteria from this column)	**Requirements for installer to demonstrate compliance with code**	**Airflow Test Required?**
☐ Prescriptive design (Table 7.1)	Enter the installed ventilation air-moving equipment information and the installed ventilation duct system information in the tables below, and certify on the CF-6R that the installed system conforms to the Table 7.1 prescriptive design criteria.	no
☐ Central Fan Integrated (CFI)	Central forced air system fans used in Central Fan Integrated ventilation systems shall demonstrate, in air distribution mode, a watt draw less than 0.58 W/CFM per Standards §151(f)11. Submit a CF-6R-MECH-22-HERS form for each forced air unit used for a CFI system. HERS verification is required.	yes
☐ Engineered Design	Enter the installed ventilation air-moving equipment information and the installed ventilation duct system information in the tables below, and certify on the CF-6R that the installed system conforms to the engineered ventilation system design approved by the enforcement agency.	yes
☐ Manufacturer's design criteria	Enter the installed ventilation air-moving equipment information and the installed ventilation duct system information in the tables below, and certify on the CF-6R that the installed system conforms to the manufacturer's ventilation system duct design criteria.	no

LOCAL VENTILATION SYSTEM DESIGN - Identify the ventilation system design criteria		
(select one criteria from this column)	**Requirements for installer to demonstrate compliance with code**	**Airflow Test Required?**
☐ Prescriptive design (Table 7.1)	Enter the installed ventilation air-moving equipment information and the installed ventilation duct system information in the tables below, and certify on the CF-6R that the installed system conforms to the Table 7.1 prescriptive design criteria.	no
☐ Engineered Design	Enter the installed ventilation air-moving equipment information and the installed ventilation duct system information in the tables below, and certify on the CF-6R that the installed system conforms to the engineered ventilation system design approved by the enforcement agency.	yes
☐ Manufacturer's design criteria	Enter the installed ventilation air-moving equipment information and the installed ventilation duct system information in the tables below, and certify on the CF-6R that the installed system conforms to the manufacturer's ventilation system duct design criteria.	no

Table 7.1 Prescriptive Duct Sizing Requirements

Diameter, (in)	Flex Duct				Smooth Duct			
Fan Rating cfm @ 0.25 in. w.g.	50	80	100	125	50	80	100	125
	Maximum Allowable Duct Length (ft)							
Diameter, (in)	Flex Duct				Smooth Duct			
3	X	X	X	X	5	X	X	X
4	70	3	X	X	105	35	5	X
5	NL	70	35	20	NL	135	85	55
6	NL	NL	125	95	NL	NL	NL	145
7 and above	NL	NL	NL	NL	NL	NL	NL	NL

This table assumes no elbows. Deduct 15 ft of allowable duct length for each turn, elbow, or fitting.
NL = no limit on duct length of this size
X = not allowed, any length of duct of this size with assumed turns, elbows, fittings will exceed the rated pressure drop

INSTALLED VENTILATION AIR-MOVING EQUIPMENT INFORMATION

Ventilation devices and equipment shall be tested and rated by HVI procedures for airflow and sound. Sound rating maximum is 1.0 sone for continuous duty and 3.0 sone for intermittent duty unless maximum rated airflow exceeds 400 cfm. In the table below, list the fan equipment installed that meets the requirement for whole-building ventilation and local ventilation exhaust.

Fan or System Name or Location[1]	System Type[2] (WBV or LVE)	Required Airflow[3] (CFM)	Fan Manufacturer Name[4]	Fan Model Number[5]	Certified Airflow[6] (CFM)	Sound Rating[7] (Sone)	Certified Fan Watts[8]	Calculate Fan (Watt per CFM)[9]

1) Enter the Fan or System Identification Name or Location Name or System Identifier (e.g. "Bath02" "MastBath", "Kitchen01").
2) What type of ventilation requirement is the fan specified to meet? WBV (whole-building ventilation) or LVE (local ventilation exhaust).
3) Enter the ventilation airflow required by the calculations or tables in the Whole-Building Ventilation or Local Ventilation Exhaust sections above (CFM). At least one fan must be designated for use for compliance with the "Whole-Building Ventilation" requirement.
4) Enter the fan manufacture's name.
5) Enter the fan model number or series number.
6) Enter the fan's Certified Airflow rating at 0.25 inch w.c. (CFM). Fans rated at less than 0.25 inch w.c. (e.g. 0.1inch w.c.) cannot be used to comply with the ventilation requirements using the prescriptive design criteria in Table 7.1. This certified airflow rating value must be equal to or greater than the required airflow from column 3 of this table when demonstrating compliance using the prescriptive design criteria in Table 7.1.
7) Enter the fan's certified sound rating (Sone) corresponding to the certified airflow rating that was entered in column 6 of this table for the fan.
8) Enter the fan watt draw corresponding to the certified airflow rate that was entered in column 6 of this table for the fan.
9) Divide the Watt value from column 8 by the Certified Airflow value (CFM) from column 6. Fans are required to be rated for operation at less than 1.2 Watt/CFM.

INSTALLED VENTILATION DUCT SYSTEM INFORMATION

Airflows required by the standard refer to delivered airflow of the installed system as determined by testing with a flow hood, flow grid, or other measuring device. Alternatively, the equipment's HVI airflow rating at a pressure of 0.25 inch w.c. may be used, provided the duct sizing meets the prescriptive requirements of Table 7.1, or manufacturer's duct design criteria.

Fan or System Name or Location[1]	Compliance Method[2] (T or P)	Required Airflow[3] (CFM)	Airflow Test[4] (CFM)	Duct Type[5]	Number of Elbows and Fittings[6]	Actual Duct Length[7] (ft)	Allowable Duct Length[8] (ft)	Pass or Fail[9]

1. *Enter the Fan or System Identification Name, or Location Name, or System Identifier. These should be the same identifiers as shown in the INSTALLED VENTILATION AIR-MOVING EQUIPMENT INFORMATION table column 1 above.*
2. *Enter the method for demonstrating compliance with the ventilation airflow requirements. Enter "T" for Tested or "P" for Prescriptive.*
3. *Enter the ventilation airflow required by the calculations or tables in the WHOLE-BUILDING VENTILATION or LOCAL VENTILATION EXHAUST sections above (CFM). This should be the same airflow value that was entered for this fan in column 3 of the INSTALLED VENTILATION AIR-MOVING EQUIPMENT INFORMATION table above.*
4. *If complying by a method that requires an Airflow Test of the installed system, enter the result from the Airflow Test for the installed system (CFM).*
5. *Enter duct type for the installed system. Choices are Flex or Smooth if using Table 7.1 for compliance.*
6. *Enter total number of elbows or fittings or sharp turns in the ventilation duct for the installed system.*
7. *Enter the installed system's actual total duct length (ft).*
8. *If complying by use of the prescriptive design criteria, enter the Maximum Allowable Duct Length (ft) for the system as determined by table 7.1 above.*
9. *If complying by airflow test, the system passes if the Tested Airflow[4] equals or exceeds the Required Airflow[3]. If complying by prescriptive design criteria, the system passes if actual total duct length[7] is less than the Table 7.1 maximum allowed length from column 8. Enter: Pass or Fail*

OTHER REQUIREMENTS

The numbering below corresponds to other requirements listed in ASHRAE 62.2. Refer also to Chapter 4.6 of the Residential Compliance Manual for information describing these other requirements for Indoor Air Quality and Mechanical Ventilation.

☐ 6.1 Transfer Air

☐ 6.2 Instructions and Labeling

☐ 6.3 Cloths Dryers

☐ 6.4 Combustion and solid-fuel burning appliances

☐ 6.5 Garages

☐ 6.6 Ventilation Opening Area

☐ 6.7 Minimum filtration

☐ 6.8 Air Inlets

☐ Prescriptive Designs: For ventilation systems that utilize *prescriptive design* criteria, the signature of the Responsible Person in the declaration statement below certifies that the installed system conforms to the prescriptive ventilation system design criteria from Table 7.1 of Standard 62.2 and manufacturer's installation specifications.

☐ Engineered Designs: For ventilation systems that utilize *engineered design* criteria, the signature of the Responsible Person in the declaration statement below certifies that the installed system conforms to the engineered ventilation system design documentation approved by the enforcement agency.

☐ Manufacturer's design criteria: For ventilation systems that utilize *manufacturer's design criteria*, the signature of the Responsible Person in the declaration statement below certifies that the installed system conforms to the manufacturer's published duct system design criteria and installation specifications.

DECLARATION STATEMENT

- I certify under penalty of perjury, under the laws of the State of California, the information provided on this form is true and correct.
- I am eligible under Division 3 of the Business and Professions Code to accept responsibility for construction, or an authorized representative of the person responsible for construction (responsible person).
- I certify that the installed features, materials, components, or manufactured devices identified on this certificate (the installation) conforms to all applicable codes and regulations, and the installation is consistent with the plans and specifications approved by the enforcement agency.
- I reviewed a copy of the Certificate of Compliance (CF-1R) form approved by the enforcement agency that identifies the specific requirements for the installation. I certify that the requirements detailed on the CF-1R that apply to the installation have been met.
- **I will ensure that a completed, signed copy of this Installation Certificate shall be posted, or made available with the building permit(s) issued for the building, and made available to the enforcement agency for all applicable inspections. I understand that a signed copy of this Installation Certificate is required to be included with the documentation the builder provides to the building owner at occupancy.**

Company Name: (Installing Subcontractor or General Contractor or Builder/Owner)		
Responsible Person's Name:		Responsible Person's Signature:
CSLB License:	Date Signed:	Position With Company (Title):

INSTALLATION CERTIFICATE		CF-6R-MECH-06
Evaporatively Cooled Condensing Units		**(Page 1 of 2)**
Site Address:	**Enforcement Agency:**	**Permit Number:**

HVAC SYSTEMS: *Evaporatively Cooled Condensing Units*

CEC Certified Mfr. Name and Model Number	# of Identical Systems	EER_a	EER_b	Duct Location (attic, etc.)	Duct R-value	Cooling Load (Btu/hr)	Cooling Capacity (Btu/hr)

EER_a = EER at 75° F wetbulb and 95° F dry bulb;

EER_b = EER at 65° F wetbulb and 82° F dry bulb

The system complies with all eligibility criteria:		**YES**	**NO**
1	EER at 95° F dry bulb and 75° F wet bulb temperature is listed with ARI	☐	☐
2	EER at 82° F dry bulb and 65° F wet bulb temperature is submitted to ARI and published in accordance with ARI guidelines.	☐	☐
	Pass if: Yes in lines 1-5	☐	☐

The system complies with all eligibility criteria:		**YES**	**NO**
1	Water stays in the water casing.	☐	☐
2	Water pump starts running when the system is turned on.	☐	☐
3	When the water pump is running, verify that all the condenser coils are wet.	☐	☐
4	High pressure trip for the compressor is set (per manufacturer's documents) at or below 300 psig for R22 Refrigerant and at or below the saturation pressure corresponding to a temperature of 131^0 F for all other refrigerants.	☐	☐
5	When the water supply to the water casing is turned off and the casing is drained, the water pump (if the pump is water cooled) and the compressor trip off.	☐	☐
6	Condenser coils have a corrosion-resistant coating.	☐	☐
7	Electrolytic protection is installed, and the wiring of the protection circuit is intact.	☐	☐
8	Water casing is made up of corrosion-resistant material.	☐	☐
9	A blow-down pump is installed for periodic blow-down in order to remove solids from the water casing. Operation of this pump is automatic and is linked to compressor run time or conductivity of the water in the casing.	☐	☐
10	Water casing is sloped downward toward the blow-down pump location.	☐	☐
11	Drift elimination is in place, there is not a mist of water exiting with the exhaust air.	☐	☐
12	Verify that condensate from the cooling coils is routed to water casing unless a document is submitted to the Building Department showing that doing so is not practical due to availability of space, health, or safety concerns.	☐	☐

13	Condenser has manufacturer's certification that water consumption is less than or equal to 5.0 gallons per ton-hour of capacity at ARI Rating conditions.	☐	☐
14	Water connection is made with tubing not more than ¼" ID at the unit. Larger line may come up to the connection.	☐	☐
15	Overflow from the unit is not connected directly to the sewer drain (so that in the event of a water float failure, an overflow condition can be more easily detected) or another means of determining an overflow condition is provided.	☐	☐
	Pass if: Yes in lines 1-15	☐	☐

☐ EER for evaporatively cooled condensers must be verified by a HERS rater.

☐ Ducts are required to be tested and sealed in all evaporatively cooled condenser installations, and the duct sealing must be verified by a HERS rater.

☐ Proper refrigerant charge or a Charge Indicator Light (certified by the Energy Commission) must be verified by a HERS rater for all evaporatively cooled condenser installations.

DECLARATION STATEMENT

- I certify under penalty of perjury, under the laws of the State of California, the information provided on this form is true and correct.
- I am eligible under Division 3 of the Business and Professions Code to accept responsibility for construction, or an authorized representative of the person responsible for construction (responsible person).
- I certify that the installed features, materials, components, or manufactured devices identified on this certificate (the installation) conforms to all applicable codes and regulations, and the installation is consistent with the plans and specifications approved by the enforcement agency.
- I reviewed a copy of the Certificate of Compliance (CF-1R) form approved by the enforcement agency that identifies the specific requirements for the installation. I certify that the requirements detailed on the CF-1R that apply to the installation have been met.
- **I will ensure that a completed, signed copy of this Installation Certificate shall be posted, or made available with the building permit(s) issued for the building, and made available to the enforcement agency for all applicable inspections. I understand that a signed copy of this Installation Certificate is required to be included with the documentation the builder provides to the building owner at occupancy.**

Company Name: (Installing Subcontractor or General Contractor or Builder/Owner)		
Responsible Person's Name:		Responsible Person's Signature:
CSLB License:	Date Signed:	Position With Company (Title):

Evaporative Cooler Units

CEC Certified Mfr. Name and Model Number	# of Identical Systems	EER	Duct Location (attic, etc.)	Duct R-value	Total Power (watts)
		13			
		13			
		13			
		13			

The system complies with all eligibility criteria:		☐ System Qualifies	
		✓	✓
1	The equipment manufacturer shall certify to the Commission that water use does not exceed 7.5 gallons per ton hour based on the Title 20 Appliance Standards testing criteria.	☐ Yes	☐ No
2	Equipment shall be permanently installed (no window or portable units).	☐ Yes	☐ No
3	Installation shall provide for automatic relief of supply air from the house with maximum air velocity through the relief dampers not exceeding 800 fpm (at the Title 20 rated airflow). Pressure relief dampers and ductwork shall be distributed to provide adequate airflow through all habitable rooms. For installations with an attic, ceiling dampers shall be installed to relieve air into the attic, and then to outside through attic vents. For installations without an attic, sidewall relief dampers are acceptable.	☐ Yes	☐ No
4	To minimize water consumption, bleed systems are not allowed.	☐ Yes	☐ No
5	A water quality management system (either "pump down" or conductivity sensor) is required. "Pump down" systems can either be integral to the evaporative cooler or they can be accessories that operate on a timed interval. The time interval between dumps shall be set to a minimum of six hours of cooler operation. Longer intervals are encouraged if local water quality allows	☐ Yes	☐ No
6	Automatic thermostats are required. On/off control is not allowed.	☐ Yes	☐ No
7	If the evaporative cooler duct system is shared with a heating and/or cooling system, the installed duct system shall employ backdraft dampers at the evaporative cooler supply.	☐ Yes	☐ No
8	The installing contractor must provide a winter closure device that substantially blocks outdoor air from entering the indoor space.	☐ Yes	☐ No
9	The size of the water inlet connection at the evaporative cooler shall not exceed 3/8".	☐ Yes	☐ No
10	Unless prohibited by local code, the sump overflow line shall not be directly connected to a drain and shall be terminated in a location that is normally visible to the building occupants.	☐ Yes	☐ No

11	System type is either indirect or direct/indirect Note: direct evaporative coolers cannot be used as part of the evaporative cooling compliance option. (Circle witch type)	indirect	direct/ indirect
	Pass if: Yes in lines 1-	☐ Pass	☐ Fail

DECLARATION STATEMENT

- **I certify under penalty of perjury, under the laws of the State of California, the information provided on this form is true and correct.**
- I am eligible under Division 3 of the Business and Professions Code to accept responsibility for construction, or an authorized representative of the person responsible for construction (responsible person).
- I certify that the installed features, materials, components, or manufactured devices identified on this certificate (the installation) conforms to all applicable codes and regulations, and the installation is consistent with the plans and specifications approved by the enforcement agency.
- I reviewed a copy of the Certificate of Compliance (CF-1R) form approved by the enforcement agency that identifies the specific requirements for the installation. I certify that the requirements detailed on the CF-1R that apply to the installation have been met.
- **I will ensure that a completed, signed copy of this Installation Certificate shall be posted, or made available with the building permit(s) issued for the building, and made available to the enforcement agency for all applicable inspections. I understand that a signed copy of this Installation Certificate is required to be included with the documentation the builder provides to the building owner at occupancy.**

Company Name: (Installing Subcontractor or General Contractor or Builder/Owner)		
Responsible Person's Name:		Responsible Person's Signature:
CSLB License:	Date Signed:	Position With Company (Title):

INSTALLATION CERTIFICATE		CF-6R-MECH-08
Ice Storage Air Conditioning (ISAC) Units		**(Page 1 of 2)**
Site Address:	**Enforcement Agency:**	**Permit Number:**

Ice Storage Air Conditioning (ISAC) Units

Enter the specification information from the CEC database for the installed condensing unit and for the installed system components in the table below.

Name and Model Number[1]	# of Identical Systems	SEER[1]	Duct Location (attic, etc.)	Duct R-value	Cooling Load (Btu/hr)	Cooling Capacity (Btu/hr)

The system complies with all eligibility criteria:	☐ System Qualifies	
	✓	✓
The model number of the installed unit matches the model number used for compliance credit.	☐ Yes	☐ No

The system complies with all eligibility criteria:		☐ System Qualifies	
1	Verify that building cooling is controlled by a standard indoor HVAC thermostat and not by factory installed controls.	✓ ☐ Yes	✓ ☐ No
2	Verify that ice Making is not controlled by the thermostat.	☐ Yes	☐ No
3	Verify that the water tank is filled to the proper level as specified by the manufacturer.	☐ Yes	☐ No
4	Verify that the correct model number (as indicated in compliance documents including) time is installed. Certify the installed model number on the CF-1R.	☐ Yes	☐ No
5	Force the controls to indicate no demand for cooling, set the time to be within the nighttime time period and simulate that the tank is not full with ice. Verify that the system operates properly in the Ice-Making mode (i.e., it starts charging the tank and does not provide cooling to the building).	☐ Yes	☐ No
6	Force the controls to indicate no demand for cooling, set the time to be within the nighttime time period, and simulate the tank being full of ice. Verify that the system is operates properly in the Idle mode (i.e., the compressor is off, and no cooling via the system is provided).	☐ Yes	☐ No
7	Force the controls to indicate a demand for cooling and set the time to be within the daytime time period. Verify that the system operates properly in the Ice Melt mode (i.e., it starts discharging and that the compressor is off).	☐ Yes	☐ No
8	Force the controls to indicate a demand for cooling and set the time to be within the morning shoulder time period. Verify that the system operates properly in the Direct Cooling mode (i.e., the system is providing cooling with the compressor).	☐ Yes	☐ No

9	Force the controls to indicate no cooling load, and set the time to be within the daytime time period. Verify that the system operates properly in the Idle mode (i.e., it does not provide cooling to the building, and the compressor is off).	☐ Yes	☐ No
10	Force the controls to indicate a demand for cooling and set the time to be within the night time period. Verify that the cooling is provided by the compressor.	☐ Yes	☐ No
	Pass if: Yes in lines 1 - 10	☐ **Pass**	☐ **Fail**

☐ Ducts are required to be tested and sealed in all Ice Storage Air Conditioner installations, and the duct sealing must be verified by a HERS rater.

DECLARATION STATEMENT

- **I certify under penalty of perjury, under the laws of the State of California, the information provided on this form is true and correct.**
- I am eligible under Division 3 of the Business and Professions Code to accept responsibility for construction, or an authorized representative of the person responsible for construction (responsible person).
- I certify that the installed features, materials, components, or manufactured devices identified on this certificate (the installation) conforms to all applicable codes and regulations, and the installation is consistent with the plans and specifications approved by the enforcement agency.
- I reviewed a copy of the Certificate of Compliance (CF-1R) form approved by the enforcement agency that identifies the specific requirements for the installation. I certify that the requirements detailed on the CF-1R that apply to the installation have been met.
- **I will ensure that a completed, signed copy of this Installation Certificate shall be posted, or made available with the building permit(s) issued for the building, and made available to the enforcement agency for all applicable inspections. I understand that a signed copy of this Installation Certificate is required to be included with the documentation the builder provides to the building owner at occupancy.**

Company Name: (Installing Subcontractor or General Contractor or Builder/Owner)		
Responsible Person's Name:		Responsible Person's Signature:
CSLB License:	Date Signed:	Position With Company (Title):

INSTALLATION CERTIFICATE		CF-6R-MECH-20-HERS
Duct Leakage Test – Completely New or Replacement Duct System		**(Page 1 of 2)**
Site Address:	**Enforcement Agency:**	**Permit Number:**

Enter the Duct System Name or Identification/Tag:
Enter the Duct System Location or Area Served:
Note: Submit one Installation Certificate for each duct system that must demonstrate compliance in the dwelling.

This certificate is required for compliance for completely new duct systems installed in new dwelling construction, and also for completely new or replacement duct systems in existing dwellings. For existing dwellings, a completely new or replacement duct system can also include existing parts of the original duct system (e.g., register boots, air handler, coil, plenums, etc.) if those parts are accessible and they can be sealed.

Duct Leakage Diagnostic Test – completely new or replacement duct system

Enter a value for the Allowed Leakage (CFM) for the duct system leakage verification. The value entered must be the VLLDCS criteria or one of the three calculated leakage rates described below.	Allowed Leakage (CFM)
Verified Low Leakage Ducts in Conditioned Space (VLLDCS) Compliance Credit. If compliance credit for verified low leakage ducts in conditioned space is shown in the special features section of the CF-1R, the leakage to outside test method must be used to verify duct leakage (refer to RA3.1.4.3.4), and 25 CFM must be entered for Allowed Leakage. If VLLDCS is not specified on the CF-1R, determine Allowed Leakage using one of the following three calculation methods as applicable.	
Allowed leakage (select one calculation method from this section). Use 6% for calculations if tested at "final" or 4% if tested at "rough." ☐ Cooling system method: Nominal capacity of condenser in Tons _____ x 400 x 6% (or 4%)=_____CFM ☐ Heating system method: 21.7 x _____ Output Capacity in Thousands of Btu/hr x 6% (or 4%) =_____CFM ☐ Measured airflow method (RA3.3): Enter measured fan flow in CFM here_____ x 6% (or 4%) =_____CFM	
Enter value for **Actual** leakage (CFM) in the right column, from measurement using applicable duct leakage pressurization test procedure from Reference Residential Appendix RA3.1(CFM @ 25 Pa).	Actual Leakage (CFM)
List **Actual** Leakage from duct leakage test(CFM)	
Pass if Actual Leakage is equal to or less than Allowed Leakage	**Pass Fail**
For complete replacement of duct systems only, if the 6 percent leakage rate criteria cannot be met, a smoke test should be performed to verify that the excess leakage is coming only from a pre-existing furnace cabinet (air handler cabinet), and not from other *accessible* portions of the duct system. A HERS rater must verify the installation (No sampling allowed). List **Actual** Leakage from smoke test(CFM)	
Pass if all accessible leaks (except for existing air handler) are sealed using smoke	**Pass Fail**

Compliance Method

This dwelling was: (select one of the following two choices):
☐ Tested at Final
☐ Tested at Rough-in (requires installer to complete the *visual inspection at final construction stage* described below)

Visual Inspection at Final Construction Stage (if applicable)

After installing the interior finishing wall and verifying that the above rough-in tests was completed, the following procedure must be performed:

- ☐ For all supply and return registers, verify that the spaces between the register boot and the interior finishing wall are properly sealed.
- ☐ If the house rough-in duct leakage test was conducted without an air handler installed, inspect the connection points between the air handler and the supply and return plenums to verify that the connection points are properly sealed.
- ☐ Inspect all joints to ensure that no cloth backed rubber adhesive duct tape is used.

☐ Outside air (OA) ducts for Central Fan Integrated (CFI) ventilation systems, shall not be sealed/taped off during duct leakage testing. CFI OA ducts that utilize controlled motorized dampers, that open only when OA ventilation is required to meet ASHRAE Standard 62.2, and close when OA ventilation is not required, may be configured to the closed position during duct leakage testing.

☐ All supply and return register boots must be sealed to the drywall

☐ New duct installations cannot utilize building cavities as plenums or platform returns in lieu of ducts.

☐ Mastic and draw bands must be used in combination with Cloth backed, rubber adhesive duct tape to seal leaks at duct connections.

DECLARATION STATEMENT

- I certify under penalty of perjury, under the laws of the State of California, the information provided on this form is true and correct.
- I am eligible under Division 3 of the Business and Professions Code to accept responsibility for construction, or an authorized representative of the person responsible for construction (responsible person).
- I certify that the installed features, materials, components, or manufactured devices identified on this certificate (the installation) conforms to all applicable codes and regulations, and the installation is consistent with the plans and specifications approved by the enforcement agency.
- I understand that a HERS rater will check the installation to verify compliance, and that that if such checking identifies defects, I am required to take corrective action at my expense. I understand that Energy Commission and HERS provider representatives will also perform quality assurance checking of installations, including those approved as part of a sample group but not checked by a HERS rater, and if those installations fail to meet the requirements of such quality assurance checking, the required corrective action and additional checking/testing of other installations in that HERS sample group will be performed at my expense.
- I reviewed a copy of the Certificate of Compliance (CF-1R) form approved by the enforcement agency that identifies the specific requirements for the installation. I certify that the requirements detailed on the CF-1R that apply to the installation have been met.
- **I will ensure that a completed, signed copy of this Installation Certificate shall be posted, or made available with the building permit(s) issued for the building, and made available to the enforcement agency for all applicable inspections. I understand that a signed copy of this Installation Certificate is required to be included with the documentation the builder provides to the building owner at occupancy.** I will ensure that all Installation Certificates will come from a HERS provider data registry for multiple orientation alternatives, and beginning October 1, 2010, for all low-rise residential buildings.

Company Name: (Installing Subcontractor or General Contractor or Builder/Owner)		
Responsible Person's Name:		Responsible Person's Signature:
CSLB License:	Date Signed:	Position With Company (Title):
Is this installation monitored by a Third Party Quality Control Program (TPQCP)? Yes No		Name of TPQCP (if applicable):

Registration Number: _____ *Registration Date/Time:* _____ *HERS Provider:* _____

INSTALLATION CERTIFICATE		CF-6R-MECH-21-HERS
Duct Leakage Test – Existing Duct System		**(Page 1 of 2)**
Site Address:	**Enforcement Agency:**	**Permit Number:**

Enter the Duct System Name or Identification/Tag:
Enter the Duct System Location or Area Served:
Note: Submit one Installation Certificate for each duct system that must demonstrate compliance in the dwelling.

This installation certificate is required for compliance for alterations and additions in existing dwellings to space conditioning systems and duct systems.

Note: For existing dwellings, a completely new or replacement duct system can also include existing parts of the original duct system (e.g., register boots, air handler, coil, plenums, etc.) if those parts are accessible and they can be sealed. For a completely new or replacement duct system installed in an existing dwelling, use the Installation Certificate titled "Duct Leakage Test – Completely New or Replacement Duct System."

Duct Leakage Diagnostic Test – Existing Duct System

Select one compliance method from the following four choices.

☐ Option 1. Measured leakage less than 15% of Fan Airflow.

☐ Option 2. Measured leakage to outside less than 10% of Fan Airflow.

☐ Option 3. Reduce leakage by 60% or more, and conduct smoke test to seal all accessible leaks.

☐ Option 4. Fix all accessible leaks using smoke test, and HERS rater must verify.

Note: (Option 1 must be attempted before utilizing Option 4)

Determine nominal **Fan Airflow** using one of the following three calculation methods.

☐ Cooling system method: Size of condenser in Tons _____ x 400 =_____CFM

☐ Heating system method: 21.7 x _____ Heating Output Capacity (kBtuh) =_____CFM

☐ Measured system airflow using RA3.3 airflow test procedures: _____CFM

1	**Option 1** used then: Allowed leakage = Fan Airflow _____ x 0.15 = _____CFM Actual leakage = _____CFM **Pass if Actual leakage is less than Allowed leakage**	☐ Pass ☐ Fail
2	**Option 2** used then: Allowed leakage = Fan Airflow _____ x 0.10 = _____CFM Actual leakage to outside = _____CFM **Pass if Actual leakage to outside is less than Allowed leakage**	☐ Pass ☐ Fail
3	**Option 3** used then: Initial leakage prior to start of work= _____CFM Final leakage after sealing all accessible leaks using smoke test = _____CFM Initial leakage _____ - Final leakage _____ = Leakage reduction_____CFM (Leakage reduction _____ / Initial leakage _____) x 100% = % Reduction **Pass if % Reduction ≥ 60%**	☐ Pass ☐ Fail
4	**Option 4** used then: All accessible leaks repaired using smoke test. HERS rater must verify (No sampling). **Pass if all accessible leaks have been sealed using Smoke Test**	☐ Pass ☐ Fail

Registration Number: _____ *Registration Date/Time:* _____ *HERS Provider:* _____

☐ Outside air (OA) ducts for Central Fan Integrated (CFI) ventilation systems, shall not be sealed/taped off during duct leakage testing. CFI OA ducts that utilize controlled motorized dampers, that open only when OA ventilation is required to meet ASHRAE Standard 62.2, and close when OA ventilation is not required, may be configured to the closed position during duct leakage testing.

☐ All supply and return register boots must be sealed to the drywall

☐ New duct installations cannot utilize building cavities as plenums or platform returns in lieu of ducts.

☐ Mastic and draw bands must be used in combination with cloth backed rubber adhesive duct tape to seal leaks at all new duct connections.

DECLARATION STATEMENT

- I certify under penalty of perjury, under the laws of the State of California, the information provided on this form is true and correct.
- I am eligible under Division 3 of the Business and Professions Code to accept responsibility for construction, or an authorized representative of the person responsible for construction (responsible person).
- I certify that the installed features, materials, components, or manufactured devices identified on this certificate (the installation) conforms to all applicable codes and regulations, and the installation is consistent with the plans and specifications approved by the enforcement agency.
- I understand that a HERS rater will check the installation to verify compliance, and that that if such checking identifies defects, I am required to take corrective action at my expense. I understand that Energy Commission and HERS provider representatives will also perform quality assurance checking of installations, including those approved as part of a sample group but not checked by a HERS rater, and if those installations fail to meet the requirements of such quality assurance checking, the required corrective action and additional checking/testing of other installations in that HERS sample group will be performed at my expense.
- I reviewed a copy of the Certificate of Compliance (CF-1R) form approved by the enforcement agency that identifies the specific requirements for the installation. I certify that the requirements detailed on the CF-1R that apply to the installation have been met.
- **I will ensure that a completed, signed copy of this Installation Certificate shall be posted, or made available with the building permit(s) issued for the building, and made available to the enforcement agency for all applicable inspections. I understand that a signed copy of this Installation Certificate is required to be included with the documentation the builder provides to the building owner at occupancy.** I will ensure that all Installation Certificates will come from a HERS provider data registry for multiple orientation alternatives, and beginning October 1, 2010, for all low-rise residential buildings.

Company Name: (Installing Subcontractor or General Contractor or Builder/Owner)		
Responsible Person's Name:		Responsible Person's Signature:
CSLB License:	Date Signed:	Position With Company (Title):
Is this installation monitored by a Third Party Quality Control Program (TPQCP)? Yes No		Name of TPQCP (if applicable):

As many as 4 systems in the dwelling can be documented for compliance using this form. Attach an additional form(s) for any additional systems in the dwelling as applicable.

Hole for the placement of a Static Pressure Probe (HSPP), and Permanently installed Static Pressure Probe (PSPP) in the supply plenum

When the Certificate of Compliance (CF1R)indicates Cooling Coil Airflow or Fan Watt Draw verification are required, HSPP or PSPP are required to be installed in each air handler in the dwelling. Procedures for installing HSPP and PSPP are described in Reference Residential Appendix RA3.3. This measure requires verification by a HERS rater.

Select one method from the two choices below for compliance with the HSPP/PSPP requirement for this dwelling.		
☐	HSPP	1/4 inch (6 mm) hole in the return plenum and labeled and sealed according to Figure in Section RA3.3.1.1.
☐	PSPP	1/4 inch (6 mm) hole equipped with a permanently installed pressure probe downstream of evaporative coil in the supply plenum according to Figure in Section RA3.3.1.1.

System Name or Identification/Tag				
System Location or Area Served				
Confirm that a HSPP or PSPP has been installed on the air handler per the requirements of RA3.3.1.1. **Enter Pass or Fail**				

Cooling Coil Airflow Verification

When the Certificate of Compliance indicates Cooling Coil Airflow verification is required, the procedures for measuring the cooling coil airflow must be performed as specified in Reference Residential Appendix RA3.3. Results of the cooling coil airflow diagnostic test must be entered in the table below. This measure requires verification by a HERS rater.

Select one method from the three choices below for compliance with the Cooling Coil Airflow test requirement for this dwelling.	
☐	Diagnostic Fan Flow Using Plenum Pressure Matching according to the procedures in RA3.3.3.1.1
☐	Diagnostic Fan Flow Using Flow Grid Measurement according to the procedures in RA3.3.3.1.2
☐	Diagnostic Fan Flow Using Flow Capture Hood according to the procedures in RA3.3.3.1.3

System Name or Identification/Tag				
System Location or Area Served				
Nominal Cooling Capacity (ton) of the outdoor unit.				
Enter the minimum airflow requirement from the CF-1R (CFM/ton).				
Calculate the target minimum airflow for the test by multiplying the CFM/ton criteria specified on the CF-1R by the nominal cooling capacity of the outdoor unit (ton). **Target (CFM)**				
Enter the diagnostically tested airflow (CFM). **Tested (CFM)**				
The system complies if Tested (CFM) is equal or greater than Target (CFM). **Enter Pass or Fail**				

Fan Watt Draw Verification

When the Certificate of Compliance indicates Fan Watt Draw verification is required, the procedures for measuring the Fan Watt Draw must be performed as specified in Reference Residential Appendix RA3.3. Results of the Fan Watt Draw diagnostic test must be entered in the table below. This measure requires verification by a HERS rater. Note: Fan watt draw must be measured simultaneously with cooling coil airflow. The fan watt draw measurement and cooling coil airflow measurement must simultaneously meet or exceed their target criteria specified by the CF-1R for the dwelling.

Select one method from the two choices below for compliance with the Fan Watt Draw test requirement for this dwelling.

- ☐ Portable Watt Meter Measurement according to the procedures in RA3.3.2.2.1
- ☐ Utility Revenue Meter Measurement according to the procedures in RA3.3.2.2.2

System Name or Identification/Tag				
System Location or Area Served				
Enter the air handler Target (CFM) from the cooling coil airflow test table above.				
Enter the fan watt draw requirement from the CF-1R (Watt/CFM).				
Calculate the target maximum Watt draw for the test by multiplying the Watt/CFM criteria specified on the CF-1R by the air handler Target (CFM). **Target (Watt)**				
Enter the diagnostically tested Watt draw (Watt). **Tested (Watt)**				
The system complies if Tested (Watt) is less than or equal to Target (Watt) **Enter pass or Fail**				

DECLARATION STATEMENT

- I certify under penalty of perjury, under the laws of the State of California, the information provided on this form is true and correct.
- I am eligible under Division 3 of the Business and Professions Code to accept responsibility for construction, or an authorized representative of the person responsible for construction (responsible person).
- I certify that the installed features, materials, components, or manufactured devices identified on this certificate (the installation) conforms to all applicable codes and regulations, and the installation is consistent with the plans and specifications approved by the enforcement agency.
- I understand that a HERS rater will check the installation to verify compliance, and that that if such checking identifies defects, I am required to take corrective action at my expense. I understand that Energy Commission and HERS provider representatives will also perform quality assurance checking of installations, including those approved as part of a sample group but not checked by a HERS rater, and if those installations fail to meet the requirements of such quality assurance checking, the required corrective action and additional checking/testing of other installations in that HERS sample group will be performed at my expense.
- I reviewed a copy of the Certificate of Compliance (CF-1R) form approved by the enforcement agency that identifies the specific requirements for the installation. I certify that the requirements detailed on the CF-1R that apply to the installation have been met.
- **I will ensure that a completed, signed copy of this Installation Certificate shall be posted, or made available with the building permit(s) issued for the building, and made available to the enforcement agency for all applicable inspections. I understand that a signed copy of this Installation Certificate is required to be included with the documentation the builder provides to the building owner at occupancy.** I will ensure that all Installation Certificates will come from a HERS provider data registry for multiple orientation alternatives, and beginning October 1, 2010, for all low-rise residential buildings.

Company Name: (Installing Subcontractor or General Contractor or Builder/Owner)		
Responsible Person's Name:		Responsible Person's Signature:
CSLB License:	Date Signed:	Position With Company (Title):
Is this installation monitored by a Third Party Quality Control Program (TPQCP)? Yes No		Name of TPQCP (if applicable):

Registration Number: _____ *Registration Date/Time:* _____ *HERS Provider:* _____

INSTALLATION CERTIFICATE		CF-6R-MECH-23-HERS
Verification of High EER Equipment		**(Page 1 of 1)**
Site Address:	**Enforcement Agency:**	**Permit Number:**

Verification of High EER Equipment

Procedures for verification of High EER Equipment are described in Reference Residential Appendix RA3.4. For dwelling units with multiple systems, the procedures must be applied to each system separately. As many as 4 systems in the dwelling can be documented for compliance using this form. Attach an additional form(s) for any additional systems in the dwelling as applicable.

1	System Name or Identification/Tag				
2	System Location or Area Served				
3	ARI Rated EER of the installed equipment (Btu/Watt-hr)				
4	Make and Model Number of the installed Outdoor Unit				
5	Make and Model Number of the installed Inside Coil				
6	Make and Model Number of the installed Furnace or Air Handler.				
7	Minimum Equipment EER required for compliance as reported on the CF-1R				
☐ When a high EER system specification includes a time delay relay, the installation of the time delay relay must be verified for compliance credit. Refer to Reference Residential Appendix RA3.4.3 for the Time Delay Relay Verification Procedure. ☐ When installation of specific matched equipment is necessary to achieve a high EER, installation of the specific equipment must be verified for compliance credit. Refer to Reference Residential Appendix RA3.4.3 for the Matched Equipment Verification Procedure.					
8	If the ARI Rated EER in row 3 is equal to or greater than the required minimum EER in row 7, the unit complies. **If the unit complies enter Pass**				

DECLARATION STATEMENT

- I certify under penalty of perjury, under the laws of the State of California, the information provided on this form is true and correct.
- I am eligible under Division 3 of the Business and Professions Code to accept responsibility for construction, or an authorized representative of the person responsible for construction (responsible person).
- I certify that the installed features, materials, components, or manufactured devices identified on this certificate (the installation) conforms to all applicable codes and regulations, and the installation is consistent with the plans and specifications approved by the enforcement agency.
- I understand that a HERS rater will check the installation to verify compliance, and that that if such checking identifies defects, I am required to take corrective action at my expense. I understand that Energy Commission and HERS provider representatives will also perform quality assurance checking of installations, including those approved as part of a sample group but not checked by a HERS rater, and if those installations fail to meet the requirements of such quality assurance checking, the required corrective action and additional checking/testing of other installations in that HERS sample group will be performed at my expense.
- I reviewed a copy of the Certificate of Compliance (CF-1R) form approved by the enforcement agency that identifies the specific requirements for the installation. I certify that the requirements detailed on the CF-1R that apply to the installation have been met.
- **I will ensure that a completed, signed copy of this Installation Certificate shall be posted, or made available with the building permit(s) issued for the building, and made available to the enforcement agency for all applicable inspections. I understand that a signed copy of this Installation Certificate is required to be included with the documentation the builder provides to the building owner at occupancy.** I will ensure that all Installation Certificates will come from a HERS provider data registry for multiple orientation alternatives, and beginning October 1, 2010, for all low-rise residential buildings.

Company Name: (Installing Subcontractor or General Contractor or Builder/Owner)		
Responsible Person's Name:		Responsible Person's Signature:
CSLB License:	Date Signed:	Position With Company (Title):

Registration Number: _____ *Registration Date/Time:* _____ *HERS Provider:* _____

TEMPERATURE MEASUREMENT ACCESS HOLES (TMAH); SATURATION TEMPERATURE MEASUREMENT SENSORS (STMS); AND CHARGE INDICATOR DISPLAY (CID).
As many as 4 systems in the dwelling can be documented for compliance using this form. Attach an additional form(s) for any additional systems in the dwelling as applicable.

Temperature Measurement Access Holes (TMAH) and Saturation Temperature Measurement Sensors (STMS)
Procedures for installing TMAH are specified in Reference Residential Appendix RA3.2. If refrigerant charge verification is required for compliance, TMAH are also required for compliance. STMS are only required for completely new or replacement space-conditioning systems that utilize prescriptive compliance method. If installation of a CID is utilized as an alternative to refrigerant charge verification for compliance, TMAH and STMS are not required for compliance.

TMAH - Access Holes in Supply and Return Plenums of Air Handler

System Name or Identification/Tag						
System Location or Area Served						
1	☐Yes	☐No	5/16 inch (8 mm) access hole upstream of evaporative coil in the return plenum and labeled according to Figure in Section RA3.2.2.2.2.			
2	☐Yes	☐No	5/16 inch (8 mm) access hole downstream of evaporative coil in the supply plenum and labeled according to Figure in Section RA3.2.2.2.2.			

STMS - Sensor on the Evaporator Coil

System Name or Identification/Tag						
3	☐Yes	☐No	The sensor is factory installed, or field installed according to manufacturer's specifications, or is installed by methods/specifications approved by the Executive Director.			
4	☐Yes	☐No	The sensor wire is terminated with a standard mini plug suitable for connection to a digital thermometer. The sensor mini plug is accessible to the installing technician and the HERS rater without changing the airflow through the condenser coil			
5	☐Yes	☐No	The sensor measures the saturation temperature of the coil within 1.3 degrees F			

STMS - Sensor on the Condenser Coil

System Name or Identification/Tag						
6	☐Yes	☐No	The sensor is factory installed, or field installed according to manufacturer's specifications, or is installed by methods/specifications approved by the Executive Director.			
7	☐Yes	☐No	The sensor wire is terminated with a standard mini plug suitable for connection to a digital thermometer. The sensor mini plug is accessible to the installing technician and the HERS rater without changing the airflow through the condenser coil			
8	☐Yes	☐No	The sensor measures the saturation temperature of the coil within 1.3 degrees F			
Yes to 1 through 8 for this compliance credit is a pass					✓ ☐ Pass	✓ ☐ Fail

CHARGE INDICATOR DISPLAY (CID)

Charge Indicator Display (CID) specifications are available in Reference Joint Appendix JA6; HERS verification procedure for the CID is in Reference Residential Appendix RA3.4.2.

CID - Verification of the Presence and Proper Function of a Charge Indicator Display

System Name or Identification/Tag					
System Location or Area Served					
1	☐Yes	☐No	The display module is mounted adjacent to the system thermostat		
2	☐Yes	☐No	The system has operated for at least 15 minutes, inside air temperature is greater than 65 F and outdoor temperature is greater than 55 F, and the CID display module indicates the system is operating properly (does not indicate a system fault).		
3	☐Yes	☐No	The CID was installed by the manufacturer		
4	☐Yes	☐No	or if 3 is No, the CID was installed according to the manufacturer's specifications		
Yes to 1 and 2 and yes to either of 3 or 4 for this compliance credit is a pass				✓ ☐ Pass	✓ ☐ Fail

DECLARATION STATEMENT

- I certify under penalty of perjury, under the laws of the State of California, the information provided on this form is true and correct.
- I am eligible under Division 3 of the Business and Professions Code to accept responsibility for construction, or an authorized representative of the person responsible for construction (responsible person).
- I certify that the installed features, materials, components, or manufactured devices identified on this certificate (the installation) conforms to all applicable codes and regulations, and the installation is consistent with the plans and specifications approved by the enforcement agency.
- I understand that a HERS rater will check the installation to verify compliance, and that that if such checking identifies defects, I am required to take corrective action at my expense. I understand that Energy Commission and HERS provider representatives will also perform quality assurance checking of installations, including those approved as part of a sample group but not checked by a HERS rater, and if those installations fail to meet the requirements of such quality assurance checking, the required corrective action and additional checking/testing of other installations in that HERS sample group will be performed at my expense.
- I reviewed a copy of the Certificate of Compliance (CF-1R) form approved by the enforcement agency that identifies the specific requirements for the installation. I certify that the requirements detailed on the CF-1R that apply to the installation have been met.
- **I will ensure that a completed, signed copy of this Installation Certificate shall be posted, or made available with the building permit(s) issued for the building, and made available to the enforcement agency for all applicable inspections. I understand that a signed copy of this Installation Certificate is required to be included with the documentation the builder provides to the building owner at occupancy.** I will ensure that all Installation Certificates will come from a HERS provider data registry for multiple orientation alternatives, and beginning October 1, 2010, for all low-rise residential buildings.

Company Name: (Installing Subcontractor or General Contractor or Builder/Owner)		
Responsible Person's Name:		Responsible Person's Signature:
CSLB License:	Date Signed:	Position With Company (Title):
Is this installation monitored by a Third Party Quality Control Program (TPQCP)? Yes No		Name of TPQCP (if applicable):

Standard Charge Measurement Procedure (for use if outdoor air dry-bulb is above 55 °F)

Procedures for determining Refrigerant Charge using the Standard Charge Measurement Procedure are available in Reference Residential Appendix RA3.2. As many as 4 systems in the dwelling can be documented for compliance using this form. Attach an additional form(s) for any additional systems in the dwelling as applicable.

- *The system should be installed and charged in accordance with the manufacturer's specifications before starting this procedure.*
- *The system must meet minimum airflow requirements as prerequisite for a valid refrigerant charge test.*
- *If outdoor air dry-bulb is 55 **°F** or below, the installer must use the Alternate Charge Measurement Procedure.*

Space Conditioning Systems

System Name or Identification/Tag				
System Location or Area Served				
Outdoor Unit Serial #				
Outdoor Unit Make				
Outdoor Unit Model				
Nominal Cooling Capacity Btu/hr				
Date of Verification				

Calibration of Diagnostic Instruments

Date of Refrigerant Gauge Calibration		(must be re-calibrated monthly)
Date of Thermocouple Calibration		(must be re-calibrated monthly)

Measured Temperatures (°F)

System Name or Identification/Tag				
Supply (evaporator leaving) air dry-bulb temperature ($T_{supply, db}$)				
Return (evaporator entering) air dry-bulb temperature ($T_{return, db}$)				
Return (evaporator entering) air wet-bulb temperature ($T_{return, wb}$)				
Evaporator saturation temperature ($T_{evaporator, sat}$)				
Condensor saturation temperature ($T_{condensor, sat}$)				
Suction line temperature ($T_{suction}$)				
Liquid Line Temperature (T_{liquid})				
Condenser (entering) air dry-bulb temperature ($T_{condenser, db}$)				

Minimum Airflow Requirement

Temperature Split Method Calculations for determining Minimum Airflow Requirement for Refrigerant Charge Verification. The temperature split method is specified in Reference Residential Appendix RA3.2.				
System Name or Identification/Tag				
Calculate: Actual Temperature Split = $T_{return,\ db} - T_{supply,\ db}$				
Target Temperature Split from Table RA3.2-3 using $T_{return,\ wb}$ and $T_{return,\ db}$				
Calculate difference: Actual Temperature Split – Target Temperature Split =				
Passes if difference is between -3°F and +3°F or, upon remeasurement, if between -3°F and -100°F **Enter Pass or Fail**				
Note: Temperature Split Method Calculation is not necessary if actual Cooling Coil Airflow is verified using one of the airflow measurement procedures specified in Reference Residential Appendix RA3.3. If actual cooling coil airflow is measured, the value must be equal to or greater than the Calculated Minimum Airflow Requirement in the table below.				
Calculated Minimum Airflow Requirement (CFM) = Nominal Cooling Capacity (ton) X 300 (cfm/ton)				
System Name or Identification/Tag				
Calculated Minimum Airflow Requirement (CFM)				
Measured Airflow using RA3.3 procedures (CFM)				
Passes if measured airflow is greater than or equal to the calculated minimum airflow requirement. **Enter Pass or Fail**				

Superheat Charge Method Calculations for Refrigerant Charge Verification. This procedure is required to be used for fixed orifice metering device systems				
System Name or Identification/Tag				
Calculate: Actual Superheat = $T_{suction} - T_{evaporator,\ sat}$				
Target Superheat from Table RA3.2-2 using $T_{return,\ wb}$ and $T_{condenser,\ db}$				
Calculate difference: Actual Superheat – Target Superheat =				

System passes if difference is between -5°F and +5°F **Enter Pass or Fail**				

Subcooling Charge Method Calculations for Refrigerant Charge Verification. This procedure is required to be used for thermostatic expansion valve (TXV) and electronic expansion valve (EXV) systems.				
System Name or Identification/Tag				
Calculate: Actual Subcooling = $T_{condenser,\ sat} - T_{liquid}$				
Target Subcooling specified by manufacturer				
Calculate difference: Actual Subcooling – Target Subcooling =				
System passes if difference is between -3°F and +3°F **Enter Pass or Fail**				

Metering Device Calculations for Refrigerant Charge Verification. This procedure is required to be used for thermostatic expansion valve (TXV) and electronic expansion valve (EXV) systems.				
System Name or Identification/Tag				
Calculate: Actual Superheat = $T_{suction} - T_{evaporator,\ sat}$				
Enter allowable superheat range from manufacturer's specifications (or use range between 4°F and 25°F if manufacturer's specification is not available)				
System passes if actual superheat is within the allowable superheat range **Enter Pass or Fail**				

Standard Charge Measurement Summary: System shall pass both refrigerant charge criteria, metering device criteria (if applicable), and minimum cooling coil airflow criteria based on measurements taken concurrently during system operation. If corrective actions were taken, all applicable verification criteria must be re-measured and/or recalculated.				
System Name or Identification/Tag				
System meets all refrigerant charge and airflow requirements. **Enter Pass or Fail**				

DECLARATION STATEMENT

- I certify under penalty of perjury, under the laws of the State of California, the information provided on this form is true and correct.
- I am eligible under Division 3 of the Business and Professions Code to accept responsibility for construction, or an authorized representative of the person responsible for construction (responsible person).
- I certify that the installed features, materials, components, or manufactured devices identified on this certificate (the installation) conforms to all applicable codes and regulations, and the installation is consistent with the plans and specifications approved by the enforcement agency.
- I understand that a HERS rater will check the installation to verify compliance, and that that if such checking identifies defects, I am required to take corrective action at my expense. I understand that Energy Commission and HERS provider representatives will also perform quality assurance checking of installations, including those approved as part of a sample group but not checked by a HERS rater, and if those installations fail to meet the requirements of such quality assurance checking, the required corrective action and additional checking/testing of other installations in that HERS sample group will be performed at my expense.
- I reviewed a copy of the Certificate of Compliance (CF-1R) form approved by the enforcement agency that identifies the specific requirements for the installation. I certify that the requirements detailed on the CF-1R that apply to the installation have been met.
- **I will ensure that a completed, signed copy of this Installation Certificate shall be posted, or made available with the building permit(s) issued for the building, and made available to the enforcement agency for all applicable inspections. I understand that a signed copy of this Installation Certificate is required to be included with the documentation the builder provides to the building owner at occupancy.** I will ensure that all Installation Certificates will come from a HERS provider data registry for multiple orientation alternatives, and beginning October 1, 2010, for all low-rise residential buildings.

Company Name: (Installing Subcontractor or General Contractor or Builder/Owner)		
Responsible Person's Name:		Responsible Person's Signature:
CSLB License:	Date Signed:	Position With Company (Title):
Is this installation monitored by a Third Party Quality Control Program (TPQCP)? Yes No		Name of TPQCP (if applicable):

Registration Number: _____ *Registration Date/Time:* _____ *HERS Provider:* _____

INSTALLATION CERTIFICATE		CF-6R-MECH-26-HERS
Refrigerant Charge Verification - Alternate Measurement Procedure		**(Page 1 of 1)**
Site Address:	**Enforcement Agency:**	**Permit Number:**

Alternate Charge Measurement Procedure (for use if outdoor air dry-bulb is below 55 °F)
Procedures for Determining Refrigerant Charge using the Alternate Method are available in Reference Residential Appendix RA3.2. As many as 4 systems in the dwelling can be documented for compliance using this form. Attach an additional form(s) for any additional systems in the dwelling as applicable.

- *The alternative charge measurement procedure requires that the system shall be installed and charged in accordance with the manufacturer's specifications for refrigerant charge using the weigh-in charging method.*
- *Installer verification of line lengths and charge adjustment calculation must be documented on CF-6R before starting this procedure.*
- *If outdoor air dry-bulb is 55 °F or above, installer must use the Standard Charge Measure Procedure.*

Weigh-In Charging Method for Refrigerant Charge Verification				
System Name or Identification/Tag				
System Location or Area Served				
Actual liquid line length (ft)				
Manufacturer's Standard liquid line length (ft)				
Calculate: difference in length (ft) = Actual length – Standard length				
Manufacturer's correction factor (ounces per foot)				
Calculate: charge adjustment = correction factor X difference in length				
Alternate Charge Measurement Summary: System refrigerant charge has been adjusted to meet the manufacturer's specifications based on actual line length **Enter Pass or Fail**				

DECLARATION STATEMENT

- I certify under penalty of perjury, under the laws of the State of California, the information provided on this form is true and correct.
- I am eligible under Division 3 of the Business and Professions Code to accept responsibility for construction, or an authorized representative of the person responsible for construction (responsible person).
- I certify that the installed features, materials, components, or manufactured devices identified on this certificate (the installation) conforms to all applicable codes and regulations, and the installation is consistent with the plans and specifications approved by the enforcement agency.
- I understand that a HERS rater will check the installation to verify compliance, and that that if such checking identifies defects, I am required to take corrective action at my expense. I understand that Energy Commission and HERS provider representatives will also perform quality assurance checking of installations, including those approved as part of a sample group but not checked by a HERS rater, and if those installations fail to meet the requirements of such quality assurance checking, the required corrective action and additional checking/testing of other installations in that HERS sample group will be performed at my expense.
- I reviewed a copy of the Certificate of Compliance (CF-1R) form approved by the enforcement agency that identifies the specific requirements for the installation. I certify that the requirements detailed on the CF-1R that apply to the installation have been met.
- **I will ensure that a completed, signed copy of this Installation Certificate shall be posted, or made available with the building permit(s) issued for the building, and made available to the enforcement agency for all applicable inspections. I understand that a signed copy of this Installation Certificate is required to be included with the documentation the builder provides to the building owner at occupancy.** I will ensure that all Installation Certificates will come from a HERS provider data registry for multiple orientation alternatives, and beginning October 1, 2010, for all low-rise residential buildings.

Company Name: (Installing Subcontractor or General Contractor or Builder/Owner)		
Responsible Person's Name:		Responsible Person's Signature:
CSLB License:	Date Signed:	Position With Company (Title):

Registration Number: _____ *Registration Date/Time:* _____ *HERS Provider:* _____

Maximum Rated Total Cooling Capacity (MRTCC) Compliance Credit

Procedures for calculating the Maximum Rated Total Cooling Capacity (MRTCC) compliance credit and Electrical Input exception are given in Reference Residential Appendix RA1. The value is calculated by the compliance software and given on the Certificate of Compliance (CF-1R). Compliance with this credit requires that the installed space conditioning system must have a cooling capacity rating at ARI conditions that is equal or less than the MRTCC compliance credit value. The system must also meet the HERS verification requirements for duct leakage, and prescriptive cooling coil airflow compliance credits, and if the Electrical Input Exception is utilized, the EER must be verified. As many as 4 systems in the dwelling can be documented for compliance using this form. Attach an additional form(s) for any additional systems in the dwelling as applicable.

1	System Name or Identification/Tag				
2	System Location or Area Served				
3a	ARI Rated Total Cooling Capacity of the installed system (Btu/hr)				
3b	Sum of the ARI Rated Total Cooling Capacities of multiple systems installed in the dwelling (Btu/hr), if applicable.				
Note: MRTCC credit may be calculated for the whole dwelling, or for individual cooling systems in the dwelling. If the MRTCC target value from the CF-1R is for the entire dwelling, and there are multiple cooling systems installed in the dwelling, then the sum of ARI Rated Cooling Capacities of the installed cooling systems must be calculated and entered in row 3b.					
4a	MRTCC target value from the CF-1R (Btu/hr) – if for individual systems				
4b	MRTCC target value from the CF-1R (Btu/hr) – if total for entire dwelling				
5	If the applicable row 3 value is less than or equal to the applicable row 4 value, the unit complies. **If the unit complies enter Pass**				

Electrical Input Exception for MRTCC compliance credit

Electrical Input Exception for MRTCC compliance credit allows the installed rated total cooling capacity to exceed the MRTCC target value for compliance credit if the electrical input of the oversized cooling system is less than or equal to the electrical input of a standard cooling system. For buildings with more than one cooling system, the proposed electrical input is the sum of the values for each system.

1	System Name or Identification/Tag				
2	System Location or Area Served				
6	ARI Rated EER of the installed unit (Btu/Watt-hr)				
7a	Calculate Proposed Electrical Input[7]				
7b	Sum of the Proposed Electrical Input values for entire multiple systems installed in the dwelling (Watt), if applicable.				
8a	Calculate Standard Total Electric Input[8] (Watt) – if for individual systems				
8b	Calculate Standard Total Electric Input[8] (Watt) – if total for entire dwelling				
9	If the applicable row 7 value is less than or equal to the applicable row 8 value, the unit complies. **If the unit complies enter Pass**				

Registration Number: _____ *Registration Date/Time:* _____ *HERS Provider:* _____

Notes:

7) Proposed Electrical Input (Watt) = ARI Rated Total Cooling Capacity (Btu/hr) / ARI Rated EER (Btu/Watt-hr) if the proposed Air Conditioner is listed in the ARI database with a specified furnace or air handler and that furnace or air handler is to be installed.

Otherwise, if the proposed Air Conditioner is listed in the ARI database without a furnace or air handler, the proposed electrical input is either:

Proposed Electrical Input (Watt) = [(ARI Rated Total Cooling Capacity (Btu/hr) / ARI Rated EER (Btu/Watt-hr)] +[(ARI Rated Total Cooling Capacity (Btu/hr) x .0048 (Watt-hr/Btu)];

or

Proposed Electrical Input (Watt) = [(ARI Rated Total Cooling Capacity (Btu/hr) / ARI Rated EER (Btu/Watt-hr)] – [(ARI Rated Total Cooling Capacity (Btu/hr) x .0122 (Watt-hr/Btu)] + The measured fan power (Watt); where the measured fan power is determined at an airflow equal to or greater than 350 CFM per ton using the procedure described in RA3.3 of the Residential Appendices

8) Standard Total Electric Input (Watt) = MRTCC target from the CF-1R (Btu/hr) / 10 (Btu/Watt-hr)

☐ Systems must meet the Cooling Coil Airflow HERS verification requirement in order to receive credit for MRTCC.
☐ Systems must meet the Duct Sealing HERS verification requirements in order to receive credit for MRTCC.
☐ Systems must meet the HERS verification requirement for EER if the Electrical Input Exception is utilized to comply with the MTRCC compliance credit

DECLARATION STATEMENT

- I certify under penalty of perjury, under the laws of the State of California, the information provided on this form is true and correct.
- I am eligible under Division 3 of the Business and Professions Code to accept responsibility for construction, or an authorized representative of the person responsible for construction (responsible person).
- I certify that the installed features, materials, components, or manufactured devices identified on this certificate (the installation) conforms to all applicable codes and regulations, and the installation is consistent with the plans and specifications approved by the enforcement agency.
- I understand that a HERS rater will check the installation to verify compliance, and that that if such checking identifies defects, I am required to take corrective action at my expense. I understand that Energy Commission and HERS provider representatives will also perform quality assurance checking of installations, including those approved as part of a sample group but not checked by a HERS rater, and if those installations fail to meet the requirements of such quality assurance checking, the required corrective action and additional checking/testing of other installations in that HERS sample group will be performed at my expense.
- I reviewed a copy of the Certificate of Compliance (CF-1R) form approved by the enforcement agency that identifies the specific requirements for the installation. I certify that the requirements detailed on the CF-1R that apply to the installation have been met.
- **I will ensure that a completed, signed copy of this Installation Certificate shall be posted, or made available with the building permit(s) issued for the building, and made available to the enforcement agency for all applicable inspections. I understand that a signed copy of this Installation Certificate is required to be included with the documentation the builder provides to the building owner at occupancy.** I will ensure that all Installation Certificates will come from a HERS provider data registry for multiple orientation alternatives, and beginning October 1, 2010, for all low-rise residential buildings.

Company Name: (Installing Subcontractor or General Contractor or Builder/Owner)		
Responsible Person's Name:		Responsible Person's Signature:
CSLB License:	Date Signed:	Position With Company (Title):

Registration Number: _____ *Registration Date/Time:* _____ *HERS Provider:* _____

INSTALLATION CERTIFICATE		CF-6R-MECH-28-HERS
Low Leakage Air Handler Verification		**(Page 1 of 1)**
Site Address:	**Enforcement Agency:**	**Permit Number:**

Verified Low Leakage Air Handler (LLAH) with Sealed and Tested Duct System *An additional compliance credit is available for verified low leakage ducts if a Low Leakage Air Handler is installed. The air handler must be connected to a Sealed and Tested New Duct System to receive the credit. Refer to Residential Appendix RA3.1.4.3. As many as 4 systems in the dwelling can be documented for compliance using this form. Attach an additional form(s) for any additional systems in the dwelling as applicable.*

System Name or Identification/Tag				
System Location or Area Served				
LLAH Unit Make				
LLAH Unit Model				
☐ The LLAH must be connected to a New Duct System that meets the HERS verification requirement for Sealed and Tested Ducts in order to receive compliance credit. ☐ The LLAH cabinet (furnace or heat pump fan and inside coil) must be certified to the Commission to leak 2 percent or less of its nominal air conditioning cfm delivered when pressurized to 1-inch water gauge with all present air inlets, air outlets, and condensate drain port(s) sealed.				
If the installed LLAH documentation confirms the unit meets the certification requirement and Duct Testing is specified on the CF-1R, the unit complies. **If the unit complies enter Pass**				

DECLARATION STATEMENT

- I certify under penalty of perjury, under the laws of the State of California, the information provided on this form is true and correct.
- I am eligible under Division 3 of the Business and Professions Code to accept responsibility for construction, or an authorized representative of the person responsible for construction (responsible person).
- I certify that the installed features, materials, components, or manufactured devices identified on this certificate (the installation) conforms to all applicable codes and regulations, and the installation is consistent with the plans and specifications approved by the enforcement agency.
- I understand that a HERS rater will check the installation to verify compliance, and that that if such checking identifies defects, I am required to take corrective action at my expense. I understand that Energy Commission and HERS provider representatives will also perform quality assurance checking of installations, including those approved as part of a sample group but not checked by a HERS rater, and if those installations fail to meet the requirements of such quality assurance checking, the required corrective action and additional checking/testing of other installations in that HERS sample group will be performed at my expense.
- I reviewed a copy of the Certificate of Compliance (CF-1R) form approved by the enforcement agency that identifies the specific requirements for the installation. I certify that the requirements detailed on the CF-1R that apply to the installation have been met.
- **I will ensure that a completed, signed copy of this Installation Certificate shall be posted, or made available with the building permit(s) issued for the building, and made available to the enforcement agency for all applicable inspections. I understand that a signed copy of this Installation Certificate is required to be included with the documentation the builder provides to the building owner at occupancy.** I will ensure that all Installation Certificates will come from a HERS provider data registry for multiple orientation alternatives, and beginning October 1, 2010, for all low-rise residential buildings.

Company Name: (Installing Subcontractor or General Contractor or Builder/Owner)		
Responsible Person's Name:		Responsible Person's Signature:
CSLB License:	Date Signed:	Position With Company (Title):

Registration Number: _____ *Registration Date/Time:* _____ *HERS Provider:* _____

Enter the Duct System Name or Identification/Tag:
Enter the Duct System Location or Area Served:
Note: Submit one Installation Certificate for each duct system that must demonstrate compliance in the dwelling.

SUPPLY DUCT LOCATION COMPLIANCE CREDITS

Credit is available for supply duct systems entirely in conditioned space or with reduced surface area in unconditioned spaces.

☐ **LESS THAN 12 LINEAR FEET OF SUPPLY DUCT OUTSIDE OF CONDITIONED SPACE COMPLIANCE CREDIT.** *A detailed duct design is not required for compliance with this measure. HERS verification is required for compliance with this measure.*

☐Yes	☐No	Less than 12 linear feet of supply duct outside of conditioned space.		
		Yes to this compliance credit is a pass	✓ ☐ **Pass**	✓ ☐ **Fail**

☐ **SUPPLY DUCTS LOCATED IN CONDITIONED SPACE COMPLIANCE CREDIT.** *A detailed duct design is not required for compliance with this measure. HERS verification is required for compliance with this measure.*

☐Yes	☐ No	Ducts are located within the conditioned volume of building.		
		Yes to this compliance credit is a pass	✓ ☐ **Pass**	✓ ☐ **Fail**

SUPPLY DUCT SURFACE AREA REDUCTION AND R-VALUE COMPLIANCE CREDITS

Credit is available for supply duct systems with reduced surface area in unconditioned space with varying combinations of higher performance insulation. In order to claim these credits a detailed duct system design is required to be documented on the plans approved by the enforcement agency, and the installation must be certified to be consistent with the approved plans by the installer, and the installation must be verified by a HERS rater. The size, R-value, and location of each duct segment in an unconditioned space including details describing if ducts are buried in attic insulation must be shown in the design drawings approved by the enforcement agency, entered into the compliance software, and shown on the CF-1R for the building. Procedures for field verification and diagnostic testing for this group of compliance credits are described in Reference Residential Appendix RA3.1

☐ **SUPPLY DUCT SURFACE AREA REDUCTION COMPLIANCE CREDIT**

☐Yes	☐ No	Prescriptive Cooling Coil Airflow compliance has been verified.		
☐Yes	☐ No	The building's duct system design was approved by the enforcement agency, and the duct system design is detailed in the special features section of the CF-1R approved by the enforcement agency.		
☐Yes	☐ No	The installed duct system does not have severely twisted or compressed sections that would restrict required operating airflow.		
☐Yes	☐ No	The installed duct system layout, including duct sizes and locations of supply & return registers match the duct system design plans approved by the enforcement agency, and the installed duct system meets the requirements for Verified Duct Design specified in Reference Residential Appendix RA3.1.4.1.1.1		
		Yes to all is a pass	✓ ☐ **Pass**	✓ ☐ **Fail**

☐ BURIED DUCTS ON THE CEILING R-VALUE COMPLIANCE CREDIT

In order to claim credit for buried ducts on the ceiling, the conditions for the Supply Duct Surface Area Reduction (above) must be met, the approved duct design must identify which portions of the duct system are "Buried", and the installed duct system must conform to the approved duct design. Also, the duct system must meet prescriptive Duct Leakage test requirements and the building must meet Quality Insulation Installation requirements.

☐Yes	☐ No	The duct design passes the Supply Duct Surface Area Reduction compliance credit, buried ducts are shown on the approved duct design and on the approved CF-1R, and the installed duct system is consistent with the approved duct design drawings.		
☐Yes	☐ No	Meets Verified Duct Leakage requirements		
☐Yes	☐ No	Meets Verified Quality Insulation Installation requirements		
		Yes to all is a pass	**✓ ☐ Pass**	**✓ ☐ Fail**

☐ DEEPLY BURIED DUCTS R-VALUE COMPLIANCE CREDIT

In order to claim credit for buried ducts on the ceiling, the conditions for the Supply Duct Surface Area Reduction (above) must be met, the approved duct design must identify which portions of the duct system are "Deeply Buried", and the installed duct system must conform to the approved duct design. Also, the duct system must meet prescriptive Duct Leakage test requirements and the building must meet Quality Insulation Installation requirements.

☐Yes	☐ No	The duct design passes the Supply Duct Surface Area Reduction compliance credit, buried ducts are shown on the approved duct design and on the approved CF-1R, and the installed duct system is consistent with the approved duct design drawings.		
☐Yes	☐ No	Meets Verified Duct Leakage requirements		
☐Yes	☐ No	Meets Verified Quality Insulation Installation requirements		
		Yes to all is a pass	**✓ ☐ Pass**	**✓ ☐ Fail**

DECLARATION STATEMENT

- I certify under penalty of perjury, under the laws of the State of California, the information provided on this form is true and correct.
- I am eligible under Division 3 of the Business and Professions Code to accept responsibility for construction, or an authorized representative of the person responsible for construction (responsible person).
- I certify that the installed features, materials, components, or manufactured devices identified on this certificate (the installation) conforms to all applicable codes and regulations, and the installation is consistent with the plans and specifications approved by the enforcement agency.
- I understand that a HERS rater will check the installation to verify compliance, and that that if such checking identifies defects, I am required to take corrective action at my expense. I understand that Energy Commission and HERS provider representatives will also perform quality assurance checking of installations, including those approved as part of a sample group but not checked by a HERS rater, and if those installations fail to meet the requirements of such quality assurance checking, the required corrective action and additional checking/testing of other installations in that HERS sample group will be performed at my expense.
- I reviewed a copy of the Certificate of Compliance (CF-1R) form approved by the enforcement agency that identifies the specific requirements for the installation. I certify that the requirements detailed on the CF-1R that apply to the installation have been met.
- **I will ensure that a completed, signed copy of this Installation Certificate shall be posted, or made available with the building permit(s) issued for the building, and made available to the enforcement agency for all applicable inspections. I understand that a signed copy of this Installation Certificate is required to be included with the documentation the builder provides to the building owner at occupancy.** I will ensure that all Installation Certificates will come from a HERS provider data registry for multiple orientation alternatives, and beginning October 1, 2010, for all low-rise residential buildings.

Company Name: (Installing Subcontractor or General Contractor or Builder/Owner)		
Responsible Person's Name:		Responsible Person's Signature:
CSLB License:	Date Signed:	Position With Company (Title):

Registration Number: _____ *Registration Date/Time:* _____ *HERS Provider:* _____

CERTIFICATE OF FIELD VERIFICATION AND DIAGNOSTIC TESTING		CF-4R-ENV-20
Building Envelope Sealing		**(Page 1 of 1)**
Site Address:	**Enforcement Agency:**	**Permit Number:**

BUILDING ENVELOPE SEALING

Diagnostic Testing Results					
	✓	✓	Building Envelope Leakage (CFM @ 50 Pa) as measured by Rater:		
1.	☐ Yes	☐ No	Is Measured envelope leakage less than or equal to the required level from CF-1R?		
2.	☐ Yes	☐ No	Is Mechanical Ventilation shown as required on the CF-1R?		
2a.	☐ Yes	☐ No	If Mechanical Ventilation is required on the CF-1R ('Yes' in line 2), has it been installed?		
2b.	☐ Yes	☐ No	Check this box 'yes' if mechanical ventilation is required ('Yes' in line 2) and ventilation fan watts are no greater than shown on CF-1R. Measured Watts =		
3.	☐ Yes	☐ No	Check this box "yes" if measured building infiltration (CFM @ 50 Pa) is greater than the CFM @ 50 values shown for an SLA of 1.5 on CF-1R (If this box is checked no, mechanical ventilation is required.)		
4.	☐ Yes	☐ No	Check this box "yes" if measured building infiltration (CFM @ 50 Pa) is less than the CFM @ 50 values shown for an SLA of 1.5 on CF-1R, mechanical ventilation is installed, and house pressure is greater than minus 5 Pascal with all exhaust fans operating.		
			Pass if: a. Yes in line 1 and line 3, or b. Yes in line 1 and line2, 2a, and 2b, or c. Yes in line 1 and Yes in line 4. Otherwise fail.	✓ ☐ Pass	✓ ☐ Fail

SAMPLE FORM FOR INFORMATION ONLY NOT FOR SUBMITTAL

DECLARATION STATEMENT

- I certify under penalty of perjury, under the laws of the State of California, the information provided on this form is true and correct.
- I am the certified HERS rater who performed the verification services identified and reported on this certificate (responsible rater).
- The installed feature, material, component, or manufactured device requiring HERS verification that is identified on this certificate (the installation) complies with the applicable requirements in Reference Residential Appendices RA2 and RA3 and the requirements specified on the Certificate(s) of Compliance (CF-1R) approved by the local enforcement agency.
- The information reported on applicable sections of the Installation Certificate(s) (CF-6R), signed and submitted by the person(s) responsible for the installation conforms to the requirements specified on the Certificate(s) of Compliance (CF-1R) approved by the enforcement agency.

Builder or Installer information as shown on the Installation Certificate (CF-6R)		
Company Name: (Installing Subcontractor or General Contractor or Builder/Owner)		
Responsible Person's Name:	CSLB License:	
HERS Provider Data Registry Information		
Sample Group # (if applicable):	☐ tested/verified dwelling	☐ not-tested/verified dwelling in a HERS sample group
HERS Rater Information		
HERS Rater Company Name:		
Responsible Rater's Name	Responsible Rater's Signature	
Responsible Rater's Certification Number w/ this HERS Provider:	Date Signed:	

Registration Number: _____ Registration Date/Time: _____ HERS Provider: _____

CERTIFICATE OF FIELD VERIFICATION AND DIAGNOSTIC TESTING		CF-4R-ENV-21
Quality Insulation Installation (QII) - Framing Stage Checklist		**(Page 1 of 2)**
Site Address:	**Enforcement Agency:**	**Permit Number:**

1. Quality Insulation Installation (QII) - Framing Stage Checklist

Air barrier and preparation for insulation verification inspection must be done at framing stage before insulation is installed. If there are any "No" answers rows not filled out or signatures missing then this is not valid form and cannot be accepted by the building department or HERS rater. If spray foam is used an air barrier is not required NA would be checked.

✓ **FLOOR AIR BARRIER**			
☐ Yes	☐ No	☐ NA	All gaps in the raised floor to unconditioned space or to outside larger than 1/8" filled with foam or caulk. (NA if SPF)
☐ Yes	☐ No	☐ NA	All openings on a second floor including under a tub where the drain penetrates the floor is sealed
✓ ***WALLS AIR BARRIER***			
☐ Yes	☐ No	☐ NA	All gaps in wall exterior sheathing to unconditioned space or to outside larger than 1/8" filled with foam or caulk. (NA if SPF)
☐ Yes	☐ No	☐ NA	No gaps in sheathing against the garage, attic, or covered patio. All gaps larger than 1/8" filled with foam or caulk. (NA if SPF)
☐ Yes	☐ No	☐ NA	All gaps in Rim-joists in interior and exterior walls to the outside including holes drilled for electrical and plumbing larger than 1/8" filled with foam or caulk. (NA if SPF)
☐ Yes	☐ No	☐ NA	Rope caulk, foam gasket, or caulking bead around the entire sole plate of the home
☐ Yes	☐ No	☐ NA	All gaps around the windows are caulked or foamed (stuffing with fiberglass not acceptable)
✓ **ROOF/CEILING INSPECTION**			
☐ Yes	☐ No	☐ NA	Attic rulers appropriate to the material installed **evenly** throughout the attic to verify depth. (NA if SPF or batt)
☐ Yes	☐ No	☐ NA	Square foot of attic _____ / 250 = _____ minimum number of rulers installed. Must round up. Number of rulers actually installed _____ (NA if SPF or batt)
☐ Yes	☐ No	☐ NA	ALL rulers visible from attic access.(NA if SPF or batt)
☐ Yes	☐ No	☐ NA	Eave vents baffles installed at all eave vents to prevent air movement under or into insulation. (NA if SPF)
☐ Yes	☐ No	☐ NA	Area of eave vent baffle is the same or larger than the net free-ventilation area of the eave vent. (NA if SPF)
✓ **ROOF/CEILING AIR BARRIER**			
☐ Yes	☐ No	☐ NA	All draft stops in place to form a continuous ceiling air barrier no gaps larger than 1/8". (NA if SPF)
☐ Yes	☐ No	☐ NA	**All** drops covered with hard covers. Gaps around or in the hard cover larger than 1/8" filled with foam or caulk. (NA if SPF).
☐ Yes	☐ No		All recessed light fixtures in non conditioned space IC and air tight (AT)
☐ Yes	☐ No		All recessed light fixtures are sealed with a gasket or caulk between the housing and the ceiling
☐ Yes	☐ No		Openings around flue shafts fully sealed with solid blocking or flashing and any remaining gaps sealed with fire-rated caulk or sealant.
☐ Yes	☐ No		Piping shafts openings fully sealed and caulked
☐ Yes	☐ No		Penetrations from wiring sealed with caulk or sealant
☐ Yes	☐ No		All duct chases, fireplace chases, and double walls sealed air tight at the ceiling level. All gaps into shafts larger than 1/8" filled with foam or caulk. Special attention paid to ducts entering shafts from ceiling.

SAMPLE FORM
FOR INFORMATION ONLY
NOT FOR SUBMITTAL

✓ **GARAGE ROOF/CEILING AIR BARRIER FOR TWO STORIES (no conditioned space over garage)**			
☐ Yes	☐ No	☐ NA	Air barrier installed at joists in garage to house transition. No gaps larger than 1/8". If SPF used then air barrier installed gaps not required to be filled. (NA if SPF or conditioned space over garage)
✓ **GARAGE ROOF/CEILING AIR BARRIER FOR TWO STORIES (conditioned space over garage)**			
☐ Yes	☐ No	☐ NA	If insulation is to be installed at subfloor then subfloor has no gaps over 1/8". Air barrier installed at joists in garage to house transition. (NA if SPF or no conditioned space over garage)
☐ Yes	☐ No	☐ NA	If insulation is to be installed at ceiling of garage then ceiling and joists to the outside have no gaps over 1/8". (NA if SPF or no conditioned space over garage.)

SAMPLE FORM
FOR INFORMATION ONLY
NOT FOR SUBMITTAL

DECLARATION STATEMENT

- I certify under penalty of perjury, under the laws of the State of California, the information provided on this form is true and correct.
- I am the certified HERS rater who performed the verification services identified and reported on this certificate (responsible rater).
- The installed feature, material, component, or manufactured device requiring HERS verification that is identified on this certificate (the installation) complies with the applicable requirements in Reference Residential Appendices RA2 and RA3 and the requirements specified on the Certificate(s) of Compliance (CF-1R) approved by the local enforcement agency.
- The information reported on applicable sections of the Installation Certificate(s) (CF-6R), signed and submitted by the person(s) responsible for the installation conforms to the requirements specified on the Certificate(s) of Compliance (CF-1R) approved by the enforcement agency.

Builder or Installer information as shown on the Installation Certificate (CF-6R)		
Company Name: (Installing Subcontractor or General Contractor or Builder/Owner)		
Responsible Person's Name:	CSLB License:	
HERS Provider Data Registry Information		
Sample Group # (if applicable):	☐ tested/verified dwelling	☐ not-tested/verified dwelling in a HERS sample group
HERS Rater Information		
HERS Rater Company Name:		
Responsible Rater's Name	Responsible Rater's Signature	
Responsible Rater's Certification Number w/ this HERS Provider:	Date Signed:	

CERTIFICATE OF FIELD VERIFICATION AND DIAGNOSTIC TESTING		CF-4R-ENV-22
Quality Insulation Installation (QII) - Insulation Stage Checklist		**(Page 1 of 3)**
Site Address:	**Enforcement Agency:**	**Permit Number:**

Insulation Stage Checklist✓ FLOOR INSULATION			
☐ Yes	☐ No	☐ NA	All floor joist cavity insulation installed to uniformly fit the cavity side-to-side and end-to-end. (NA if floors slab on grade).
☐ Yes	☐ No	☐ NA	Insulation in full contact with the subfloor, NO gaps. (NA if floors are slab on grade).
☐ Yes	☐ No	☐ NA	Insulation in contact with air barrier on all five sides. (ends, sides, back). NA if floors are slab on grade.
☐ Yes	☐ No	☐ NA	Batts cut to fit around wiring and plumbing, or split (delaminated). (NA if loose fill, SPF, or slab on grade).
☐ Yes	☐ No	☐ NA	Batt insulation has continuous support. (NA if loose fill, SPF, or slab on grade).
☐ Yes	☐ No	☐ NA	Insulation R-value same or greater that listed on CF-1R.
☐ Yes	☐ No	☐ NA	SPF insulation properly adhered to avoid gaps and provide an air seal
☐ Yes	☐ No	☐ NA	SPF (Spray Polyurethane Foam Medium Density) insulation the average thickness is equal to or greater than that listed on the CF-1R and the minimum thickness shall be no more than ½ inch less than the required thickness for the R-value. (NA for other forms of insulation).
☐ Yes	☐ No	☐ NA	**SPF** list the required floor cavity R-value from CF-1R, R-_____. List tested average depth of insulation____ in X 5.8R = _____ R this is the installed R-value and must be equal to or greater than listed on CF-1R (NA for other forms of insulation)
☐ Yes	☐ No	☐ NA	Measure thickness of insulation in 6 random measurements. Must be within ½ inch of the required depth.

✓ **WALL INSULATION**			
☐ Yes	☐ No	☐ NA	Standard depth cavities insulation fills cavity and touches air barrier on all six sides. (NA if SPF used and meets the required R-value).
☐ Yes	☐ No	☐ NA	All double walls and bump-outs, the insulation fills the cavity or additional air barrier installed so that the insulation fills the cavity. Insulation touches all six sides. (NA if SPF used and meets the required R-value).
☐ Yes	☐ No		Behind tub/shower, walls under stairs, and fireplace, insulation touches air barrier on five sides. Not required to fill the space. Cavity required to be air tight.
☐ Yes	☐ No	☐ NA	**BATTS**, not a single void/depression deeper than ¾" in ANY stud bay. (NA if loose fill or SPF)
☐ Yes	☐ No	☐ NA	**BATTS**, voids/depressions less than 3/4" allowed as long as the area is not greater than 10% of the surface area for each stud bay. (NA if loose fill or SPF).
☐ Yes	☐ No	☐ NA	**Loose Fill** no gaps or voids of any depth allowed. (NA if batts or SPF).
☐ Yes	☐ No		Any gaps between studs or insulation larger than 1/8" must be filled with insulation or foam.
☐ Yes	☐ No		All Rim-joists to the outside insulated.
☐ Yes	☐ No		Special attention must be paid to corner channels, wall intersections, and behind tub/shower enclosures insulated to proper R-Value.
☐ Yes	☐ No	☐ NA	All skylight shafts and attic kneewalls insulated with minimum R-19.
☐ Yes	☐ No	☐ NA	Insulation in **full** contact with drywall or wall finish of skylight shafts and attic kneewalls.

☐ Yes	☐ No		Wall insulation same or better than what is listed on the CF-1R.
☐ Yes	☐ No	☐ NA	SPF insulation properly adhered to avoid gaps and provide an air seal

SAMPLE FORM
FOR INFORMATION ONLY
NOT FOR SUBMITTAL

☐ Yes	☐ No	☐ NA	SPF (Spray Polyurethane Foam Medium Density) insulation the average thickness is equal to or greater than that listed on the CF-1R and the minimum thickness shall be no more than ½ inch less than the required thickness for the R-value. (NA for other forms of insulation).
☐ Yes	☐ No	☐ NA	**SPF** list the required floor cavity R-value from CF-1R, R-_____. List tested average depth of insulation____ in X 5.8R = _____ R this is the installed R-value and must be equal to or greater than listed on CF-1R (NA for other forms of insulation)
☐ Yes	☐ No	☐ NA	Measure thickness of insulation in 6 random measurements. Must be within ½ inch of the required depth
✓ **ROOF/CEILING INSULATION**			
☐ Yes	☐ No		**BATTS** there must not be a single gap/void/depression deeper than ¾". (NA if loose fill or SPF).
☐ Yes	☐ No		**BATTS** voids/depressions less than 3/4" allowed as long as the area is not greater than 10% of the surface area for each stud bay. (NA if loose fill or SPF).
☐ Yes	☐ No	☐ NA	**NO** gaps or voids allowed for loose fill and SPF. (NA if batts).
☐ Yes	☐ No		All ceiling insulation installed to uniformly fit the cavity side-to-side and end-to-end.
☐ Yes	☐ No		Insulation in full contact with the ceiling, NO gaps.
☐ Yes	☐ No		Insulation in contact with air barrier on all five sides.
☐ Yes	☐ No	☐ NA	**Batts** cut to fit around wiring and plumbing, or split (delaminated). (NA for loose fill or SPF).
☐ Yes	☐ No	☐ NA	**Batts** taller than the trusses must expand so that they touch each other over the trusses. (NA for loose fill or SPF).
☐ Yes	☐ No	☐ NA	**SPF** the average thickness is equal to or greater than that listed on the CF-1R and the minimum thickness shall be no more than ½ inch less than the required thickness for the R-value. (NA if loose fill or batts).
☐ Yes	☐ No	☐ NA	Insulation fully fills cavity below any plywood platform or cat-walk. If SPF used then minimum 3 inches. (NA if no platforms or cat-walks)
☐ Yes	☐ No		Attic access gasketed
☐ Yes	☐ No		Attic access insulated with rigid foam or batt insulation using adhesive or mechanical fastener. R-value same as ceiling R-value listed on CF-1R
☐ Yes	☐ No		Recessed light fixtures covered full depth with insulation. If SPF used then other forms of insulation used to cover or enclosed in a box fabricated from ½-inch plywood, 18 ga. sheet metal, 1/4-inch hard board or drywall
☐ Yes	☐ No		Wall insulation same or better than what is listed on the CF-1R
☐ Yes	☐ No	☐ NA	**Loose Fill** Insulation at proper depth – insulation rulers visible and indicating proper depth and R-value for blown in insulation. (NA for batts or SPF).
☐ Yes	☐ No	☐ NA	**Loose Fill** Insulation **uniformly** covers the entire ceiling (or roof) area from outside of all exterior walls. (NA for batts or SPF).
☐ Yes	☐ No	☐ NA	**Loose-fill** mineral fiber insulation meets or exceeds manufacturer's minimum weight and thickness requirement for the target R-value. Target R-value _____ Manufacturer's minimum required weight for the target R-value _____ (pounds-per-square foot). Sample weight _____ (pounds per square foot).
☐ Yes	☐ No	☐ NA	Manufacturer's minimum required thickness at time of installation _____ (inches) Manufacturer's minimum required settled thickness _____ (inches). Number of days since loose-fill insulation was installed _____ (days). At the time of installation, the insulation shall be greater than or equal to the manufacturer's minimum initial insulation thickness. If the HERS rater does not verify the insulation at the time of installation, and if the loose-fill insulation has been in place less than seven days the thickness shall be greater than the manufacturer's minimum required thickness at the time of installation less 1/2 inch to account for settling. If the insulation has been in place for seven days or longer the insulation thickness shall be greater than or equal to the manufacturer's minimum required settled thickness. Minimum thickness measured (inches).

SAMPLE FORM
FOR INFORMATION ONLY
NOT FOR SUBMITTAL

✓ GARAGE ROOF/CEILING INSULATION FOR TWO STORIES(no conditioned space over garage)			
☐ Yes	☐ No	☐ NA	Insulation installed at joists against the air barrier in the garage to house transition. All wall insulation requirements above must be met. (NA if conditioned space over garage).
✓ GARAGE ROOF/CEILING INSULATION FOR TWO STORIES(conditioned space over garage)			
☐ Yes	☐ No	☐ NA	If insulation is to be installed at subfloor then the insulation must **also** be installed at joists against the air barrier in the garage to house transition. All ceiling and wall insulation requirements above must be met. (NA if no conditioned space over garage).
☐ Yes	☐ No	☐ NA	If insulation is to be installed at ceiling of garage then the joists to the outside must be insulated and all the insulation requirements listed above must be met. (NA if no conditioned space over garage).
☐ Yes	☐ No	☐ NA	SPF insulation properly adhered to avoid gaps and provide an air seal
☐ Yes	☐ No	☐ NA	SPF (Spray Polyurethane Foam Medium Density) insulation the average thickness is equal to or greater than that listed on the CF-1R and the minimum thickness shall be no more than ½ inch less than the required thickness for the R-value. (NA for other forms of insulation).
☐ Yes	☐ No	☐ NA	**SPF** list the required floor cavity R-value from CF-1R, R-_____. List tested average depth of insulation____ in X 5.8R = _____ R this is the installed R-value and must be equal to or greater than listed on CF-1R (NA for other forms of insulation)
☐ Yes	☐ No	☐ NA	Measure thickness of insulation in 6 random measurements. Must be within ½ inch of the required depth

SAMPLE FORM
FOR INFORMATION ONLY
NOT FOR SUBMITTAL

DECLARATION STATEMENT

- I certify under penalty of perjury, under the laws of the State of California, the information provided on this form is true and correct.
- I am the certified HERS rater who performed the verification services identified and reported on this certificate (responsible rater).
- The installed feature, material, component, or manufactured device requiring HERS verification that is identified on this certificate (the installation) complies with the applicable requirements in Reference Residential Appendices RA2 and RA3 and the requirements specified on the Certificate(s) of Compliance (CF-1R) approved by the local enforcement agency.
- The information reported on applicable sections of the Installation Certificate(s) (CF-6R), signed and submitted by the person(s) responsible for the installation conforms to the requirements specified on the Certificate(s) of Compliance (CF-1R) approved by the enforcement agency.

Builder or Installer information as shown on the Installation Certificate (CF-6R)		
Company Name: (Installing Subcontractor or General Contractor or Builder/Owner)		
Responsible Person's Name:	CSLB License:	
HERS Provider Data Registry Information		
Sample Group # (if applicable):	☐ tested/verified dwelling	☐ not-tested/verified dwelling in a HERS sample group
HERS Rater Information		
HERS Rater Company Name:		
Responsible Rater's Name	Responsible Rater's Signature	
Responsible Rater's Certification Number w/ this HERS Provider:	Date Signed:	

CERTIFICATE OF FIELD VERIFICATION AND DIAGNOSTIC TESTING		CF-4R-MECH-20
Duct Leakage Test – Completely New or Replacement Duct System		**(Page 1 of 2)**
Site Address:	**Enforcement Agency:**	**Permit Number:**

Enter the Duct System Name or Identification/Tag:
Enter the Duct System Location or Area Served:
Note: Submit one Installation Certificate for each duct system that must demonstrate compliance in the dwelling.

This certificate is required for compliance for completely new duct systems installed in new dwelling construction, and also for completely new or replacement duct systems in existing dwellings. For existing dwellings, a completely new or replacement duct system can also include existing parts of the original duct system (e.g., register boots, air handler, coil, plenums, etc.) if those parts are accessible and they can be sealed.

Duct Leakage Diagnostic Test – completely new or replacement duct system

Enter a value for the Allowed Leakage (CFM) for the duct system leakage verification. The value entered must be the VLLDCS criteria or one of the three calculated leakage rates described below.	Allowed Leakage (CFM)
Verified Low Leakage Ducts in Conditioned Space (VLLDCS) Compliance Credit. If compliance credit for verified low leakage ducts in conditioned space is shown in the special features section of the CF-1R, the leakage to outside test method must be used to verify duct leakage (refer to RA3.1.4.3.4), and 25 CFM must be entered for Allowed Leakage. If VLLDCS is not specified on the CF-1R, determine Allowed Leakage using one of the following three calculation methods as applicable.	
Allowed leakage choose one ☐ Cooling system method: Nominal capacity of condenser in Tons _____ x 400 x 6% =_____CFM ☐ Heating system method: 21.7 x _____ Output Capacity in Thousands of Btu/hr x 6%=_____CFM ☐ Measured airflow method (RA3.3): Enter measured fan flow in CFM here_____ x 6% =_____CFM	
Enter value for **Actual** leakage (CFM) in the right column, from measurement using applicable duct leakage pressurization test procedure from Reference Residential Appendix RA3.1(CFM @ 25 Pa).	Actual Leakage (CFM)
List **Actual** Leakage from duct leakage test(CFM)	
Pass if Actual Leakage is less than Allowed Leakage	**Pass Fail**
For complete replacement of duct systems only, if the 6 percent leakage rate criteria cannot be met, a smoke test should be performed to verify that the excess leakage is coming only from a pre-existing furnace cabinet (air handler cabinet), and not from other *accessible* portions of the duct system. A HERS rater must verify the installation (No sampling allowed). List **Actual** Leakage from smoke test(CFM)	
Pass if all accessible leaks (except for existing air handler) are sealed using smoke	**Pass Fail**

Compliance Method

This dwelling was: (select one of the following two choices):
☐ Tested at Final
☐ Tested at Rough-in (requires installer to complete the *visual inspection at final construction stage* described below)

SAMPLE FORM
FOR INFORMATION ONLY
NOT FOR SUBMITTAL

Visual Inspection at Final Construction Stage (if applicable)

After installing the interior finishing wall and verifying that the above rough-in tests was completed, the following procedure must be performed:

- ☐ For all supply and return registers, verify that the spaces between the register boot and the interior finishing wall are properly sealed.
- ☐ If the house rough-in duct leakage test was conducted without an air handler installed, inspect the connection points between the air handler and the supply and return plenums to verify that the connection points are properly sealed.
- ☐ Inspect all joints to ensure that no cloth backed rubber adhesive duct tape is used.

☐ Outside air (OA) ducts for Central Fan Integrated (CFI) ventilation systems, shall not be sealed/taped off during duct leakage testing. CFI OA ducts that utilize controlled motorized dampers, that open only when OA ventilation is required to meet ASHRAE Standard 62.2, and close when OA ventilation is not required, may be configured to the closed position during duct leakage testing.

☐ All supply and return register boots must be sealed to the drywall

☐ New duct installations cannot utilize building cavities as plenums or platform returns in lieu of ducts.

☐ Mastic and draw bands must be used in combination with Cloth backed, rubber adhesive duct tape to seal leaks at duct connections.

SAMPLE FORM
FOR INFORMATION ONLY
NOT FOR SUBMITTAL

DECLARATION STATEMENT

- I certify under penalty of perjury, under the laws of the State of California, the information provided on this form is true and correct.
- I am the certified HERS rater who performed the verification services identified and reported on this certificate (responsible rater).
- The installed feature, material, component, or manufactured device requiring HERS verification that is identified on this certificate (the installation) complies with the applicable requirements in Reference Residential Appendices RA2 and RA3 and the requirements specified on the Certificate(s) of Compliance (CF-1R) approved by the local enforcement agency.
- The information reported on applicable sections of the Installation Certificate(s) (CF-6R), signed and submitted by the person(s) responsible for the installation conforms to the requirements specified on the Certificate(s) of Compliance (CF-1R) approved by the enforcement agency.

Builder or Installer information as shown on the Installation Certificate (CF-6R)		
Company Name: (Installing Subcontractor or General Contractor or Builder/Owner)		
Responsible Person's Name:	CSLB License:	
HERS Provider Data Registry Information		
Sample Group # (if applicable):	☐ tested/verified dwelling	☐ not-tested/verified dwelling in a HERS sample group
HERS Rater Information		
HERS Rater Company Name:		
Responsible Rater's Name	Responsible Rater's Signature	
Responsible Rater's Certification Number w/ this HERS Provider:	Date Signed:	

CERTIFICATE OF FIELD VERIFICATION AND DIAGNOSTIC TESTING		CF-4R-MECH-21
Duct Leakage Test – Existing Duct System		**(Page 1 of 2)**
Site Address:	**Enforcement Agency:**	**Permit Number:**

Enter the Duct System Name or Identification/Tag:
Enter the Duct System Location or Area Served:
Note: Submit one Installation Certificate for each duct system that must demonstrate compliance in the dwelling.

This installation certificate is required for compliance for alterations and additions in existing dwellings to space conditioning systems and duct systems.

Note: For existing dwellings, a completely new or replacement duct system can also include existing parts of the original duct system (e.g., register boots, air handler, coil, plenums, etc.) if those parts are accessible and they can be sealed. For a completely new or replacement duct system installed in an existing dwelling, use the Installation Certificate titled "Duct Leakage Test – Completely New or Replacement Duct System."

SAMPLE FORM
FOR INFORMATION ONLY
NOT FOR SUBMITTAL

Duct Leakage Diagnostic Test – existing duct system

Select one compliance method from the following four choices.

☐ Option 1. Measured leakage less than 15% of Fan Airflow.

☐ Option 2. Measured leakage to outside less than 10% of Fan Airflow.

☐ Option 3. Reduce leakage by 60% or more, and conduct smoke test to seal all accessible leaks.

☐ Option 4. Fix all accessible leaks using smoke test, and HERS rater must verify.

Note: (Option 1 must be attempted before utilizing Option 4)

Determine nominal **Fan Airflow** using one of the following three calculation methods.

☐ Cooling system method: Size of condenser in Tons _____ x 400 = _____CFM

☐ Heating system method: 21.7 x _____ Heating Output Capacity (kBtuh) = _____CFM

☐ Measured system airflow using RA3.3 airflow test procedures: _____CFM

1	**Option 1** used then: Allowed leakage = Fan Airflow _____ x 0.15 = _____CFM Actual leakage = _____CFM **Pass if Actual leakage is less than Allowed leakage**	☐ Pass ☐ Fail
2	**Option 2** used then: Allowed leakage = Fan Airflow _____ x 0.10 = _____CFM Actual leakage to outside = _____CFM **Pass if Actual leakage to outside is less than Allowed leakage**	☐ Pass ☐ Fail
3	**Option 3** used then: Initial leakage prior to start of work= _____CFM Final leakage after sealing all accessible leaks using smoke test = _____CFM Initial leakage _____ - Final leakage _____ = Leakage reduction_____CFM (Leakage reduction _____ / Initial leakage _____) x 100% = % Reduction **Pass if % Reduction ≥ 60%**	☐ Pass ☐ Fail
4	**Option 4** used then: All accessible leaks repaired using smoke test. HERS rater must verify (No sampling). **Pass if all accessible leaks have been sealed using Smoke Test**	☐ Pass ☐ Fail

☐ Outside air (OA) ducts for Central Fan Integrated (CFI) ventilation systems, shall not be sealed/taped off during duct leakage testing. CFI OA ducts that utilize controlled motorized dampers, that open only when OA ventilation is required to meet ASHRAE Standard 62.2, and close when OA ventilation is not required, may be configured to the closed position during duct leakage testing.

☐ All supply and return register boots must be sealed to the drywall

☐ New duct installations cannot utilize building cavities as plenums or platform returns in lieu of ducts.

☐ Mastic and draw bands must be used in combination with cloth backed rubber adhesive duct tape to seal leaks at all new duct connections.

SAMPLE FORM
FOR INFORMATION ONLY
NOT FOR SUBMITTAL

DECLARATION STATEMENT

- I certify under penalty of perjury, under the laws of the State of California, the information provided on this form is true and correct.
- I am the certified HERS rater who performed the verification services identified and reported on this certificate (responsible rater).
- The installed feature, material, component, or manufactured device requiring HERS verification that is identified on this certificate (the installation) complies with the applicable requirements in Reference Residential Appendices RA2 and RA3 and the requirements specified on the Certificate(s) of Compliance (CF-1R) approved by the local enforcement agency.
- The information reported on applicable sections of the Installation Certificate(s) (CF-6R), signed and submitted by the person(s) responsible for the installation conforms to the requirements specified on the Certificate(s) of Compliance (CF-1R) approved by the enforcement agency.

Builder or Installer information as shown on the Installation Certificate (CF-6R)		
Company Name: (Installing Subcontractor or General Contractor or Builder/Owner)		
Responsible Person's Name:	CSLB License:	
HERS Provider Data Registry Information		
Sample Group # (if applicable):	☐ tested/verified dwelling	☐ not-tested/verified dwelling in a HERS sample group
HERS Rater Information		
HERS Rater Company Name:		
Responsible Rater's Name	Responsible Rater's Signature	
Responsible Rater's Certification Number w/ this HERS Provider:	Date Signed:	

As many as 4 systems in the dwelling can be documented for compliance using this form. Attach an additional form(s) for any additional systems in the dwelling as applicable.

Hole for the placement of a Static Pressure Probe (HSPP), and Permanently installed Static Pressure Probe (PSPP) in the supply plenum

When the Certificate of Compliance (CF1R)indicates Cooling Coil Airflow or Fan Watt Draw verification are required, HSPP or PSPP are required to be installed in each air handler in the dwelling. Procedures for installing HSPP and PSPP are described in Reference Residential Appendix RA3.3. This measure requires verification by a HERS rater.

Select one method from the two choices below for compliance with the HSPP/PSPP requirement for this dwelling.		
☐	HSPP	1/4 inch (6 mm) hole downstream of evaporative coil in the return plenum and labeled and sealed according to Figure in Section RA3.3.1.1.
☐	PSPP	1/4 inch (6 mm) hole equipped with a permanently installed pressure probe downstream of evaporative coil in the supply plenum according to Figure in Section RA3.3.1.1.

System Name or Identification/Tag				
System Location or Area Served				
Confirm that a HSPP or PSPP has been installed on the air handler per the requirements of RA3.3.1.1. **Enter Pass or Fail**				

Cooling Coil Airflow Verification

When the Certificate of Compliance indicates Cooling Coil Airflow verification is required, the procedures for measuring the cooling coil airflow must be performed as specified in Reference Residential Appendix RA3.3. Results of the cooling coil airflow diagnostic test must be entered in the table below. This measure requires verification by a HERS rater.

Select one method from the three choices below for compliance with the Cooling Coil Airflow test requirement for this dwelling.	
☐	Diagnostic Fan Flow Using Plenum Pressure Matching according to the procedures in RA3.3.3.1.1
☐	Diagnostic Fan Flow Using Flow Grid Measurement according to the procedures in RA3.3.3.1.2
☐	Diagnostic Fan Flow Using Flow Capture Hood according to the procedures in RA3.3.3.1.3

System Name or Identification/Tag				
System Location or Area Served				
Nominal Cooling Capacity (ton) of the outdoor unit.				
Enter the minimum airflow requirement from the CF-1R (CFM/ton).				
Calculate the target minimum airflow for the test by multiplying the CFM/ton criteria specified on the CF-1R by the nominal cooling capacity of the outdoor unit (ton). **Target (CFM)**				
Enter the diagnostically tested airflow (CFM). **Tested (CFM)**				
The system complies if Tested (CFM) is equal or greater than Target (CFM). **Enter Pass or Fail**				

SAMPLE FORM
FOR INFORMATION ONLY
NOT FOR SUBMITTAL

Fan Watt Draw Verification

When the Certificate of Compliance indicates Fan Watt Draw verification is required, the procedures for measuring the Fan Watt Draw must be performed as specified in Reference Residential Appendix RA3.3. Results of the Fan Watt Draw diagnostic test must be entered in the table below. This measure requires verification by a HERS rater. Note: Fan watt draw must be measured simultaneously with cooling coil airflow. The fan watt draw measurement and cooling coil airflow measurement must simultaneously meet or exceed their target criteria specified by the CF-1R for the dwelling.

Select one method from the two choices below for compliance with the Fan Watt Draw test requirement for this dwelling.				
☐ Portable Watt Meter Measurement according to the procedures in RA3.3.2.2.1				
☐ Utility Revenue Meter Measurement according to the procedures in RA3.3.2.2.2				
System Name or Identification/Tag				
System Location or Area Served				
Enter the air handler Target (CFM) from the cooling coil airflow test table above.				
Enter the fan watt draw requirement from the CF-1R (Watt/CFM).				
Calculate the target maximum Watt draw for the test by multiplying the Watt/CFM criteria specified on the CF-1R by the air handler Target (CFM). **Target (Watt)**				
Enter the diagnostically tested Watt draw (Watt). **Tested (Watt)**				
The system complies if Tested (Watt) is less than or equal to Target (Watt) **Enter pass or Fail**				

SAMPLE FORM
FOR INFORMATION ONLY
NOT FOR SUBMITTAL

DECLARATION STATEMENT

- I certify under penalty of perjury, under the laws of the State of California, the information provided on this form is true and correct.
- I am the certified HERS rater who performed the verification services identified and reported on this certificate (responsible rater).
- The installed feature, material, component, or manufactured device requiring HERS verification that is identified on this certificate (the installation) complies with the applicable requirements in Reference Residential Appendices RA2 and RA3 and the requirements specified on the Certificate(s) of Compliance (CF-1R) approved by the local enforcement agency.
- The information reported on applicable sections of the Installation Certificate(s) (CF-6R), signed and submitted by the person(s) responsible for the installation conforms to the requirements specified on the Certificate(s) of Compliance (CF-1R) approved by the enforcement agency.

Builder or Installer information as shown on the Installation Certificate (CF-6R)		
Company Name: (Installing Subcontractor or General Contractor or Builder/Owner)		
Responsible Person's Name:	CSLB License:	
HERS Provider Data Registry Information		
Sample Group # (if applicable):	☐ tested/verified dwelling	☐ not-tested/verified dwelling in a HERS sample group
HERS Rater Information		
HERS Rater Company Name:		
Responsible Rater's Name	Responsible Rater's Signature	
Responsible Rater's Certification Number w/ this HERS Provider:	Date Signed:	

Registration Number: _____ *Registration Date/Time:* _____ *HERS Provider:* _____

CERTIFICATE OF FIELD VERIFICATION AND DIAGNOSTIC TESTING		CF-4R-MECH-23
Verification of High EER Equipment		**(Page 1 of 1)**
Site Address:	**Enforcement Agency:**	**Permit Number:**

Verification of High EER Equipment

Procedures for verification of High EER Equipment are described in Reference Residential Appendix RA3.4. For dwelling units with multiple systems, the procedures must be applied to each system separately. As many as 4 systems in the dwelling can be documented for compliance using this form. Attach an additional form(s) for any additional systems in the dwelling as applicable.

1	System Name or Identification/Tag				
2	System Location or Area Served				
3	ARI Rated EER of the installed equipment (Btu/Watt-hr)				
4	Make and Model Number of the installed Outdoor Unit				
5	Make and Model Number of the installed Inside Coil				
6	Make and Model Number of the installed Furnace or Air Handler.				
7	Minimum Equipment EER required for compliance as reported on the CF-1R				
☐ When a high EER system specification includes a time delay relay, the installation of the time delay relay must be verified for compliance credit. Refer to Reference Residential Appendix RA3.4.3 for the Time Delay Relay Verification Procedure. ☐ When installation of specific matched equipment is necessary to achieve a high EER, installation of the specific equipment must be verified for compliance credit. Refer to Reference Residential Appendix RA3.4.3 for the Matched Equipment Verification Procedure.					
8	If the ARI Rated EER in row 3 is equal or greater than the required minimum EER in row 7, the unit complies. **If the unit complies enter Pass**				

SAMPLE FORM
FOR INFORMATION ONLY
NOT FOR SUBMITTAL

DECLARATION STATEMENT

- I certify under penalty of perjury, under the laws of the State of California, the information provided on this form is true and correct.
- I am the certified HERS rater who performed the verification services identified and reported on this certificate (responsible rater).
- The installed feature, material, component, or manufactured device requiring HERS verification that is identified on this certificate (the installation) complies with the applicable requirements in Reference Residential Appendices RA2 and RA3 and the requirements specified on the Certificate(s) of Compliance (CF-1R) approved by the local enforcement agency.
- The information reported on applicable sections of the Installation Certificate(s) (CF-6R), signed and submitted by the person(s) responsible for the installation conforms to the requirements specified on the Certificate(s) of Compliance (CF-1R) approved by the enforcement agency.

Builder or Installer information as shown on the Installation Certificate (CF-6R)		
Company Name: (Installing Subcontractor or General Contractor or Builder/Owner)		
Responsible Person's Name:	CSLB License:	
HERS Provider Data Registry Information		
Sample Group # (if applicable):	☐ tested/verified dwelling	☐ not-tested/verified dwelling in a HERS sample group
HERS Rater Information		
HERS Rater Company Name:		
Responsible Rater's Name	Responsible Rater's Signature	
Responsible Rater's Certification Number w/ this HERS Provider:	Date Signed:	

Registration Number: _____ *Registration Date/Time:* _____ *HERS Provider:* _____

TEMPERATURE MEASUREMENT ACCESS HOLES (TMAH); SATURATION TEMPERATURE MEASUREMENT SENSORS (STMS); AND CHARGE INDICATOR DISPLAY (CID).

As many as 4 systems in the dwelling can be documented for compliance using this form. Attach an additional form(s) for any additional systems in the dwelling as applicable.

Temperature Measurement Access Holes (TMAH) and Saturation Temperature Measurement Sensors (STMS)
Procedures for installing TMAH and STMS are specified in Reference Residential Appendix RA3.2. If refrigerant charge verification is used for compliance, TMAH are also required for compliance. STMS are only required for completely new or replacement space-conditioning systems that utilize prescriptive compliance method. If installation of a CID is utilized as an alternative to refrigerant charge verification for compliance, TMAH and STMS are not required for compliance.

TMAH - Access Holes in Supply and Return Plenums of Air Handler

System Name or Identification/Tag						
System Location or Area Served						
1	☐Yes	☐No	5/16 inch (8 mm) access hole upstream of evaporative coil in the return plenum and labeled according to Figure in Section RA3.2.2.2.2.			
2	☐Yes	☐No	5/16 inch (8 mm) access hole downstream of evaporative coil in the supply plenum and labeled according to Figure in Section RA3.2.2.2.2.			

STMS - Sensor on the Evaporator Coil

System Name or Identification/Tag						
3	☐Yes	☐No	The sensor is factory installed, or field installed according to manufacturer's specifications, or is installed by methods/specifications approved by the Executive Director.			
4	☐Yes	☐No	The sensor wire is terminated with a standard mini plug suitable for connection to a digital thermometer. The sensor mini plug is accessible to the installing technician and the HERS rater without changing the airflow through the condenser coil			
5	☐Yes	☐No	When attached to a digital thermometer, the sensor provides an indication of the saturation temperature of the coil.			

STMS - Sensor on the Condenser Coil

System Name or Identification/Tag						
6	☐Yes	☐No	The sensor is factory installed, or field installed according to manufacturer's specifications, or is installed by methods/specifications approved by the Executive Director.			
7	☐Yes	☐No	The sensor wire is terminated with a standard mini plug suitable for connection to a digital thermometer. The sensor mini plug is accessible to the installing technician and the HERS rater without changing the airflow through the condenser coil			
8	☐Yes	☐No	When attached to a digital thermometer, the sensor provides an indication of the saturation temperature of the coil.			
Yes to 1 through 8 for this compliance credit is a pass					✓ ☐ Pass	✓ ☐ Fail

SAMPLE FORM FOR INFORMATION ONLY NOT FOR SUBMITTAL

CHARGE INDICATOR DISPLAY (CID)

Charge Indicator Display (CID) specifications are available in Reference Joint Appendix JA6; HERS verification procedure for the CID is in Reference Residential Appendix RA3.4.2.

CID - Verification of the Presence and Proper Function of a Charge Indicator Display

System Name or Identification/Tag						
System Location or Area Served						
1	☐Yes	☐No	The display is mounted adjacent to the system thermostat			
2	☐Yes	☐No	The system has operated for at least 15 minutes, inside air temperature is greater than 65 F and outdoor temperature is greater than 55 F, and, the display indicates the system is operating properly (does not indicate a system fault).			
3	☐Yes	☐No	The CID was installed by the manufacturer			
4	☐Yes	☐No	or if 3 is No, the CID was installed according to the manufacturer's specifications			
Yes to 1 and 2 and yes to either of 3 and 4 for this compliance credit is a pass				✓ ☐ Pass	✓ ☐ Fail	

SAMPLE FORM FOR INFORMATION ONLY NOT FOR SUBMITTAL

DECLARATION STATEMENT

- I certify under penalty of perjury, under the laws of the State of California, the information provided on this form is true and correct.
- I am the certified HERS rater who performed the verification services identified and reported on this certificate (responsible rater).
- The installed feature, material, component, or manufactured device requiring HERS verification that is identified on this certificate (the installation) complies with the applicable requirements in Reference Residential Appendices RA2 and RA3 and the requirements specified on the Certificate(s) of Compliance (CF-1R) approved by the local enforcement agency.
- The information reported on applicable sections of the Installation Certificate(s) (CF-6R), signed and submitted by the person(s) responsible for the installation conforms to the requirements specified on the Certificate(s) of Compliance (CF-1R) approved by the enforcement agency.

Builder or Installer information as shown on the Installation Certificate (CF-6R)		
Company Name: (Installing Subcontractor or General Contractor or Builder/Owner)		
Responsible Person's Name:	CSLB License:	
HERS Provider Data Registry Information		
Sample Group # (if applicable):	☐ tested/verified dwelling	☐ not-tested/verified dwelling in a HERS sample group
HERS Rater Information		
HERS Rater Company Name:		
Responsible Rater's Name	Responsible Rater's Signature	
Responsible Rater's Certification Number w/ this HERS Provider:	Date Signed:	

Standard Charge Measurement Procedure (for use if outdoor air dry-bulb is above 55 °F)

Procedures for determining Refrigerant Charge using the Standard Charge Measurement Procedure are available in Reference Residential Appendix RA3.2. As many as 4 systems in the dwelling can be documented for compliance using this form. Attach an additional form(s) for any additional systems in the dwelling as applicable.

- *The system should be installed and charged in accordance with the manufacturer's specifications before starting this procedure.*
- *The system must meet minimum airflow requirements as prerequisite for a valid refrigerant charge test.*
- *If outdoor air dry-bulb is 55 **°F** or below, the installer must use the Alternate Charge Measurement Procedure.*

Space Conditioning Systems

System Name or Identification/Tag				
System Location or Area Served				
Outdoor Unit Serial #				
Outdoor Unit Make				
Outdoor Unit Model				
Nominal Cooling Capacity Btu/hr				
Date of Verification				

Calibration of Diagnostic Instruments

Date of Refrigerant Gauge Calibration		(must be re-calibrated monthly)
Date of Thermocouple Calibration		(must be re-calibrated monthly)

Measured Temperatures (°F)

System Name or Identification/Tag				
Supply (evaporator leaving) air dry-bulb temperature ($T_{supply, db}$)				
Return (evaporator entering) air dry-bulb temperature ($T_{return, db}$)				
Return (evaporator entering) air wet-bulb temperature ($T_{return, wb}$)				
Evaporator saturation temperature ($T_{evaporator, sat}$)				
Condensor saturation temperature ($T_{condensor, sat}$)				
Suction line temperature ($T_{suction}$)				
Liquid Line Temperature (T_{liquid})				
Condenser (entering) air dry-bulb temperature ($T_{condenser, db}$)				

SAMPLE FORM
FOR INFORMATION ONLY
NOT FOR SUBMITTAL

Minimum Airflow Requirement

Temperature Split Method Calculations for determining Minimum Airflow Requirement for Refrigerant Charge Verification. The temperature split method is specified in Reference Residential Appendix RA3.2.				
System Name or Identification/Tag				
Calculate: Actual Temperature Split = $T_{return,\ db} - T_{supply,\ db}$				
Target Temperature Split from Table RA3.2-3 using $T_{return,\ wb}$ and $T_{return,\ db}$				
Calculate difference: Actual Temperature Split – Target Temperature Split =				
Passes if difference is between -4°F and +4°F or upon remeasurement, if between -4°F and -100°F **Enter Pass or Fail**				
Note: Temperature Split Method Calculation is not necessary if actual Cooling Coil Airflow is verified using one of the airflow measurement procedures specified in Reference Residential Appendix RA3.3. If actual cooling coil airflow is measured, the value must be equal to or greater than the Calculated Minimum Airflow Requirement in the table below.				
Calculated Minimum Airflow Requirement (CFM) = Nominal Cooling Capacity (ton) X 300 (cfm/ton)				
System Name or Identification/Tag				
Calculated Minimum Airflow Requirement (CFM)				
Measured Airflow using RA3.3 procedures (CFM)				
Passes if measured airflow is greater than or equal to the calculated minimum airflow requirement. **Enter Pass or Fail**				

Superheat Charge Method Calculations for Refrigerant Charge Verification. This procedure is required to be used for fixed orifice metering device systems				
System Name or Identification/Tag				
Calculate: Actual Superheat = $T_{suction} - T_{evaporator,\ sat}$				
Target Superheat from Table RA3.2-2 using $T_{return,\ wb}$ and $T_{condenser,\ db}$				
Calculate difference: Actual Superheat – Target Superheat =				

SAMPLE FORM
FOR INFORMATION ONLY
NOT FOR SUBMITTAL

System passes if difference is between -6°F and +6°F **Enter Pass or Fail**				

Subcooling Charge Method Calculations for Refrigerant Charge Verification. This procedure is required to be used for thermostatic expansion valve (TXV) and electronic expansion valve (EXV) systems.				
System Name or Identification/Tag				
Calculate: Actual Subcooling = $T_{condenser,\ sat} - T_{liquid}$				
Target Subcooling specified by manufacturer				
Calculate difference: Actual Subcooling – Target Subcooling =				
System passes if difference is between -4°F and +4°F **Enter Pass or Fail**				

Metering Device Calculations for Refrigerant Charge Verification. This procedure is required to be used for thermostatic expansion valve (TXV) and electronic expansion valve (EXV) systems.				
System Name or Identification/Tag				
Calculate: Actual Superheat = $T_{suction} - T_{evaporator,\ sat}$				
Enter allowable superheat range from manufacturer's specifications (or use range between 3°F and 26°F if manufacturer's specification is not available)				
System passes if actual superheat is within the allowable superheat range **Enter Pass or Fail**				

SAMPLE FORM
FOR INFORMATION ONLY
NOT FOR SUBMITTAL

Standard Charge Measurement Summary:
System shall pass both refrigerant charge criteria, metering device criteria (if applicable), and minimum cooling coil airflow criteria based on measurements taken concurrently during system operation. If corrective actions were taken, all applicable verification criteria must be re-measured and/or recalculated.

System Name or Identification/Tag				
System meets all refrigerant charge and airflow requirements. **Enter Pass or Fail**				

SAMPLE FORM
FOR INFORMATION ONLY
NOT FOR SUBMITTAL

DECLARATION STATEMENT

- I certify under penalty of perjury, under the laws of the State of California, the information provided on this form is true and correct.
- I am the certified HERS rater who performed the verification services identified and reported on this certificate (responsible rater).
- The installed feature, material, component, or manufactured device requiring HERS verification that is identified on this certificate (the installation) complies with the applicable requirements in Reference Residential Appendices RA2 and RA3 and the requirements specified on the Certificate(s) of Compliance (CF-1R) approved by the local enforcement agency.
- The information reported on applicable sections of the Installation Certificate(s) (CF-6R), signed and submitted by the person(s) responsible for the installation conforms to the requirements specified on the Certificate(s) of Compliance (CF-1R) approved by the enforcement agency.

Builder or Installer information as shown on the Installation Certificate (CF-6R)		
Company Name: (Installing Subcontractor or General Contractor or Builder/Owner)		
Responsible Person's Name:	CSLB License:	
HERS Provider Data Registry Information		
Sample Group # (if applicable):	☐ tested/verified dwelling	☐ not-tested/verified dwelling in a HERS sample group
HERS Rater Information		
HERS Rater Company Name:		
Responsible Rater's Name	Responsible Rater's Signature	
Responsible Rater's Certification Number w/ this HERS Provider:	Date Signed:	

Maximum Rated Total Cooling Capacity (MRTCC) Compliance Credit

Procedures for calculating the Maximum Rated Total Cooling Capacity (MRTCC) compliance credit and Electrical Input exception are given in Reference Residential Appendix RA1. The value is calculated by the compliance software and given on the Certificate of Compliance (CF-1R). Compliance with this credit requires that the installed space conditioning system must have a cooling capacity rating at ARI conditions that is equal or less than the MRTCC compliance credit value. The system must also meet the HERS verification requirements for duct leakage, and prescriptive cooling coil airflow compliance credits, and if the Electrical Input Exception is utilized, the EER must be verified. As many as 4 systems in the dwelling can be documented for compliance using this form. Attach an additional form(s) for any additional systems in the dwelling as applicable.

1	System Name or Identification/Tag				
2	System Location or Area Served				
3a	ARI Rated Total Cooling Capacity of the installed system (Btu/hr)				
3b	Sum of the ARI Rated Total Cooling Capacities of multiple systems installed in the dwelling (Btu/hr), if applicable.				
Note: MRTCC credit may be calculated for the whole dwelling, or for individual cooling systems in the dwelling. If the MRTCC target value from the CF-1R is for the entire dwelling, and there are multiple cooling systems installed in the dwelling, then the sum of ARI Rated Cooling Capacities of the installed cooling systems must be calculated and entered in row 3b.					
4a	MRTCC target value from the CF-1R (Btu/hr) – if for individual systems				
4b	MRTCC target value from the CF-1R (Btu/hr) – if total for entire dwelling				
5	If the applicable row 3 value is less than or equal to the applicable row 4 value, the unit complies. **If the unit complies enter Pass**				

Electrical Input Exception for MRTCC compliance credit

Electrical Input Exception for MRTCC compliance credit allows the installed rated total cooling capacity to exceed the MRTCC target value for compliance credit if the electrical input of the oversized cooling system is less than or equal to the electrical input of a standard cooling system. For buildings with more than one cooling system, the proposed electrical input is the sum of the values for each system.

1	System Name or Identification/Tag				
2	System Location or Area Served				
6	ARI Rated EER of the installed unit (Btu/Watt-hr)				
7a	Calculate Proposed Electrical Input[7]				
7b	Sum of the Proposed Electrical Input values for entire multiple systems installed in the dwelling (Watt), if applicable.				
8a	Calculate Standard Total Electric Input[8] (Watt) – if for individual systems				
8b	Calculate Standard Total Electric Input[8] (Watt) – if total for entire dwelling				
9	If the applicable row 7 value is less than or equal to the applicable row 8 value, the unit complies. **If the unit complies enter Pass**				

SAMPLE FORM
FOR INFORMATION ONLY
NOT FOR SUBMITTAL

Notes:

7) Proposed Electrical Input (Watt) = ARI Rated Total Cooling Capacity (Btu/hr) / ARI Rated EER (Btu/Watt-hr) if the proposed Air Conditioner is listed in the ARI database with a specified furnace or air handler and that furnace or air handler is to be installed.

Otherwise, if the proposed Air Conditioner is listed in the ARI database without a furnace or air handler, the proposed electrical input is either:

Proposed Electrical Input (Watt) = ARI Rated Total Cooling Capacity (Btu/hr) / ARI Rated EER (Btu/Watt-hr) + ARI Rated Total Cooling Capacity (Btu/hr) x .0048 (Watt-hr/Btu);

or

Proposed Electrical Input (Watt) = ARI Rated Total Cooling Capacity (Btu/hr) / ARI Rated EER (Btu/Watt-hr) - ARI Rated Total Cooling Capacity (Btu/hr) x .0122 (Watt-hr/Btu) + The measured fan power (Watt); where the measured fan power is determined at an airflow equal to or greater than 350 CFM per ton using the procedure described in RA3.3 of the Residential Appendices

8) Standard Total Electric Input (Watt) = MRTCC target from the CF-1R (Btu/hr) / 10 (Btu/Watt-hr)

SAMPLE FORM
FOR INFORMATION ONLY
NOT FOR SUBMITTAL

☐ Systems must meet the Cooling Coil Airflow HERS verification requirement in order to receive credit for MRTCC.
☐ Systems must meet the Duct Sealing HERS verification requirements in order to receive credit for MRTCC.
☐ Systems must meet the HERS verification requirement for EER if the Electrical Input Exception is utilized to comply with the MTRCC compliance credit

DECLARATION STATEMENT

- I certify under penalty of perjury, under the laws of the State of California, the information provided on this form is true and correct.
- I am the certified HERS rater who performed the verification services identified and reported on this certificate (responsible rater).
- The installed feature, material, component, or manufactured device requiring HERS verification that is identified on this certificate (the installation) complies with the applicable requirements in Reference Residential Appendices RA2 and RA3 and the requirements specified on the Certificate(s) of Compliance (CF-1R) approved by the local enforcement agency.
- The information reported on applicable sections of the Installation Certificate(s) (CF-6R), signed and submitted by the person(s) responsible for the installation conforms to the requirements specified on the Certificate(s) of Compliance (CF-1R) approved by the enforcement agency.

Builder or Installer information as shown on the Installation Certificate (CF-6R)		
Company Name: (Installing Subcontractor or General Contractor or Builder/Owner)		
Responsible Person's Name:	CSLB License:	
HERS Provider Data Registry Information		
Sample Group # (if applicable):	☐ tested/verified dwelling	☐ not-tested/verified dwelling in a HERS sample group
HERS Rater Information		
HERS Rater Company Name:		
Responsible Rater's Name	Responsible Rater's Signature	
Responsible Rater's Certification Number w/ this HERS Provider:	Date Signed:	

CERTIFICATE OF FIELD VERIFICATION AND DIAGNOSTIC TESTING		CF-4R-MECH-28
Low Leakage Air Handler Verification		**(Page 1 of 1)**
Site Address:	**Enforcement Agency:**	**Permit Number:**

Verified Low Leakage Air Handler (LLAH) with Sealed and Tested Duct System

An additional compliance credit is available for verified low leakage ducts if a Low Leakage Air Handler is installed. The air handler must be connected to a Sealed and Tested New Duct System to receive the credit. Refer to Residential Appendix RA3.1.4.3. As many as 4 systems in the dwelling can be documented for compliance using this form. Attach an additional form(s) for any additional systems in the dwelling as applicable.

System Name or Identification/Tag				
System Location or Area Served				
LLAH Unit Make				
LLAH Unit Model				
☐ The LLAH must be connected to a New Duct System that meets the HERS verification requirement for Sealed and Tested Ducts in order to receive compliance credit. ☐ The LLAH cabinet (furnace or heat pump fan and inside coil) must be certified to the Commission to leak 2 percent or less of its nominal air conditioning cfm delivered when pressurized to 1-inch water gauge with all present air inlets, air outlets, and condensate drain port(s) sealed.				
If the installed LLAH documentation confirms the unit meets the certification requirement and Duct Testing is specified on the CF-1R, the unit complies. **If the unit complies enter Pass**				

SAMPLE FORM
FOR INFORMATION ONLY
NOT FOR SUBMITTAL

DECLARATION STATEMENT

- I certify under penalty of perjury, under the laws of the State of California, the information provided on this form is true and correct.
- I am the certified HERS rater who performed the verification services identified and reported on this certificate (responsible rater).
- The installed feature, material, component, or manufactured device requiring HERS verification that is identified on this certificate (the installation) complies with the applicable requirements in Reference Residential Appendices RA2 and RA3 and the requirements specified on the Certificate(s) of Compliance (CF-1R) approved by the local enforcement agency.
- The information reported on applicable sections of the Installation Certificate(s) (CF-6R), signed and submitted by the person(s) responsible for the installation conforms to the requirements specified on the Certificate(s) of Compliance (CF-1R) approved by the enforcement agency.

Builder or Installer information as shown on the Installation Certificate (CF-6R)		
Company Name: (Installing Subcontractor or General Contractor or Builder/Owner)		
Responsible Person's Name:	CSLB License	
HERS Provider Data Registry Information		
Sample Group # (if applicable):	☐ tested/verified dwelling	☐ not-tested/verified dwelling in a HERS sample group
HERS Rater Information		
HERS Rater Company Name:		
Responsible Rater's Name	Responsible Rater's Signature	
Responsible Rater's Certification Number w/ this HERS Provider:	Date Signed:	

Registration Number: _____ *Registration Date/Time:* _____ *HERS Provider:* _____

Enter the Duct System Name or Identification/Tag:
Enter the Duct System Location or Area Served:
Note: Submit one Installation Certificate for each duct system that must demonstrate compliance in the dwelling.

SUPPLY DUCT LOCATION COMPLIANCE CREDITS

Credit is available for supply duct systems entirely in conditioned space or with reduced surface area in unconditioned spaces.

☐ **LESS THAN 12 LINEAR FEET OF SUPPLY DUCT OUTSIDE OF CONDITIONED SPACE COMPLIANCE CREDIT.** *A detailed duct design is not required for compliance with this measure. HERS verification is required for compliance with this measure.*

☐Yes	☐No	Less than 12 linear feet of supply duct outside of conditioned space.		
		Yes to this compliance credit is a pass	✓ ☐ **Pass**	✓ ☐ **Fail**

☐ **SUPPLY DUCTS LOCATED IN CONDITIONED SPACE COMPLIANCE CREDIT.** *A detailed duct design is not required for compliance with this measure. HERS verification is required for compliance with this measure.*

☐Yes	☐ No	Ducts are located within the conditioned volume of building.		
		Yes to this compliance credit is a pass	✓ ☐ **Pass**	✓ ☐ **Fail**

SUPPLY DUCT SURFACE AREA REDUCTION AND R-VALUE COMPLIANCE CREDITS

Credit is available for supply duct systems with reduced surface area in unconditioned space with varying combinations of higher performance insulation. In order to claim these credits a detailed duct system design is required to be documented on the plans approved by the enforcement agency, and the installation must be certified to be consistent with the approved plans by the installer, and the installation must be verified by a HERS rater. The size, R-value, and location of each duct segment in an unconditioned space including details describing if ducts are buried in attic insulation must be shown in the design drawings approved by the enforcement agency, entered into the compliance software, and shown on the CF-1R for the building. Procedures for field verification and diagnostic testing for this group of compliance credits are described in Reference Residential Appendix RA3.1

☐ **SUPPLY DUCT SURFACE AREA REDUCTION COMPLIANCE CREDIT**

☐Yes	☐ No	Prescriptive Cooling Coil Airflow compliance has been verified.		
☐Yes	☐ No	The building's duct system design was approved by the enforcement agency, and the duct system design is detailed in the special features section of the CF-1R approved by the enforcement agency.		
☐Yes	☐ No	The installed duct system does not have severely twisted or compressed sections that would restrict required operating airflow.		
☐Yes	☐ No	The installed duct system layout, including duct sizes and locations of supply & return registers match the duct system design plans approved by the enforcement agency, and the installed duct system meets the requirements for Verified Duct Design specified in Reference Residential Appendix RA3.1.4.1.1.1		
		Yes to all is a pass	✓ ☐ **Pass**	✓ ☐ **Fail**

FOR INFORMATION ONLY
SAMPLE FORM
NOT FOR SUBMITTAL

☐ BURIED DUCTS ON THE CEILING R-VALUE COMPLIANCE CREDIT

In order to claim credit for buried ducts on the ceiling, the conditions for the Supply Duct Surface Area Reduction (above) must be met, the approved duct design must identify which portions of the duct system are "Buried", and the installed duct system must conform to the approved duct design. Also, the duct system must meet prescriptive Duct Leakage test requirements and the building must meet Quality Insulation Installation requirements.

☐Yes	☐ No	The duct design passes the Supply Duct Surface Area Reduction compliance credit, buried ducts are shown on the approved duct design and on the approved CF-1R, and the installed duct system is consistent with the approved duct design drawings.		
☐Yes	☐ No	Meets Verified Duct Leakage requirements		
☐Yes	☐ No	Meets Verified Quality Insulation Installation requirements		
		Yes to all is a pass	**✓ ☐ Pass**	**✓ ☐ Fail**

☐ DEEPLY BURIED DUCTS R-VALUE COMPLIANCE CREDIT

In order to claim credit for buried ducts on the ceiling, the conditions for the Supply Duct Surface Area Reduction (above) must be met, the approved duct design must identify which portions of the duct system are "Deeply Buried", and the installed duct system must conform to the approved duct design. Also, the duct system must meet prescriptive Duct Leakage test requirements and the building must meet Quality Insulation Installation requirements.

☐Yes	☐ No	The duct design passes the Supply Duct Surface Area Reduction compliance credit, buried ducts are shown on the approved duct design and on the approved CF-1R, and the installed duct system is consistent with the approved duct design drawings.		
☐Yes	☐ No	Meets Verified Duct Leakage requirements		
☐Yes	☐ No	Meets Verified Quality Insulation Installation requirements		
		Yes to all is a pass	**✓ ☐ Pass**	**✓ ☐ Fail**

SAMPLE FORM
FOR INFORMATION ONLY
NOT FOR SUBMITTAL

DECLARATION STATEMENT

- I certify under penalty of perjury, under the laws of the State of California, the information provided on this form is true and correct.
- I am the certified HERS rater who performed the verification services identified and reported on this certificate (responsible rater).
- The installed feature, material, component, or manufactured device requiring HERS verification that is identified on this certificate (the installation) complies with the applicable requirements in Reference Residential Appendices RA2 and RA3 and the requirements specified on the Certificate(s) of Compliance (CF-1R) approved by the local enforcement agency.
- The information reported on applicable sections of the Installation Certificate(s) (CF-6R), signed and submitted by the person(s) responsible for the installation conforms to the requirements specified on the Certificate(s) of Compliance (CF-1R) approved by the enforcement agency.

Builder or Installer information as shown on the Installation Certificate (CF-6R)		
Company Name: (Installing Subcontractor or General Contractor or Builder/Owner)		
Responsible Person's Name:	CSLB License:	
HERS Provider Data Registry Information		
Sample Group # (if applicable):	☐ tested/verified dwelling	☐ not-tested/verified dwelling in a HERS sample group
HERS Rater Information		
HERS Rater Company Name:		
Responsible Rater's Name	Responsible Rater's Signature	
Responsible Rater's Certification Number w/ this HERS Provider:	Date Signed:	

Appendix B

APPLICABLE TABLES AND LANGUAGE FROM STANDARDS AND RACM

Standards Tables 116-A and 116-B

TABLE 116-A DEFAULT FENESTRATION PRODUCT U-FACTORS

FRAME [1,2]	PRODUCT TYPE	SINGLE-PANE U-FACTOR	DOUBLE-PANE U-FACTOR	GLASS BLOCK[2] U-FACTOR
Metal	Operable	1.28	0.79	0.87
	Fixed	1.19	0.71	0.72
	Greenhouse/garden window	2.26	1.40	N.a
	Doors	1.25	0.77	N.a
	Skylight	1.98	1.3	N.a
Metal, Thermal Break	Operable	N.a	0.66	N.a
	Fixed	N.a	0.55	N.a
	Greenhouse/garden window	N.a	1.12	N.a
	Doors	N.a	0.59	N.a
	Skylight	N.a	1.11	N.a
Nonmetal	Operable	0.99	0.58	0.60
	Fixed	1.04	0.55	0.57
	Doors	0.99	0.53	N.a
	Greenhouse/garden windows	1.94	1.06	N.a
	Skylight	1.47	0.84	N.a

1.For all dual-glazed fenestration products, adjust the listed U-factors as follows:

a. Add0.05 fro products with dividers between panes if spacer is less than 7/16 inch wide.

b. Add 0.05 to any product with true divided lite (dividers through the panes).

2. Translucent or transparent panels shall use glass block values.

TABLE 116-B DEFAULT SOLAR HEAT GAIN COEFFICIENT (SHGC)

FRAME TYPE	PRODUCT	GLAZING	TOTAL WINDOW SHGC		
			Single Pane	**Double Pane**	**Glass Block[1]**
Metal	Operable	Clear	0.80	0.70	0.70
	Fixed	Clear	0.83	0.73	0.73
	Operable	Tinted	0.67	0.59	N.a
	Fixed	Tinted	0.68	0.60	N.a
Metal, Thermal Break	Operable	Clear	N.a	0.63	N.a
	Fixed	Clear	N.a	0.69	N.a
	Operable	Tinted	N.a.	0.53	N.a
	Fixed	Tinted	N.a.	0.57	N.a
Nonmetal	Operable	Clear	0.74	0.65	0.70
	Fixed	Clear	0.76	0.67	0.67
	Operable	Tinted	0.60	0.53	N.a
	Fixed	Tinted	0.63	0.55	N.a

1. Translucent or transparent panels shall use glass block values.

STANDARDS SECTION 118 (d) and 118 (e)

(d) **Installation of Insulation in Existing Buildings**. Insulation installed in an existing attic, or on an existing duct or water heater, shall comply with the applicable requirements of subsections 1, 2, and 3 below. If a contractor installs the insulation, the contractor shall certify to the customer, in writing, that the insulation meets the applicable requirements of subsections 1, 2, and 3 below.

1. **Attics**. If insulation is installed in the existing attic of a low-rise residential building, the R-value of the total amount of insulation (after addition of insulation to the amount, if any, already in the attic) shall be at least R-38 in climate zones 1 and 16; and R-30 in all other climate zones.

   EXCEPTION to Section 118 (d) 1: Where the accessible space in the attic is not large enough to accommodate the required R-value, the entire accessible space shall be filled with insulation provided such installation does not violate Section 1203.2 of Title 24, Part 2.

2. **Water heaters**. If external insulation is installed on an existing unfired water storage tank or on an existing back-up tank for a solar water-heating system, it shall have an R-value of at least R-12, or the heat loss of the tank surface based on an 80°F water-air temperature difference shall be less than 6.5 Btu per hour per square foot.

3. **Ducts**. If insulation is installed on an existing space-conditioning duct, it shall comply with Section 605 of the CMC.

(e) **Placement of roof/ceiling insulation.** Insulation installed to limit heat loss and gain through the top of conditioned spaces shall comply with the following:

1. Insulation shall be installed in direct contact with a continuous roof or ceiling which is sealed to limit infiltration and exfiltration as specified in Section 117, including but not

limited to placing insulation either above or below the roof deck or on top of a drywall ceiling; and

2. When insulation is installed at the roof in nonresidential buildings, fixed vents or openings to the outdoors or to unconditioned spaces shall not be installed and the space between the ceiling and the roof is either directly or indirectly conditioned space and shall not be considered an attic for the purposes of complying with CBC attic ventilation requirements; and

3. Insulation placed on top of a suspended ceiling with removable ceiling panels shall be deemed to have no affect on envelope heat loss; and

   EXCEPTION to Section 118(e) 3: When there are conditioned spaces with a combined floor area no greater than 2,000 square feet in an otherwise unconditioned building, and when the average height of the space between the ceiling and the roof over these spaces is greater than 12 feet, insulation placed in direct contact with a suspended ceiling with removable ceiling panels shall be an acceptable method of reducing heat loss from a conditioned space and shall be accounted for in heat loss calculations.

4. Insulation shall be installed below the roofing membrane or layer used to seal the roof from water penetration unless the insulation has a maximum water absorption of 0.3 percent by volume when tested according to ASTM Standard C 272.

NOTE: Vents, which do not penetrate the roof deck that are designed for wind resistance for roof membranes are not within the scope of Section 118(e)2.

STANDARDS SECTION 150 (a) and 150 (b)

Any new construction in a low-rise residential building shall meet the requirements of this Section.

(a) **Ceiling Insulation**. The opaque portions of ceilings separating conditioned spaces from unconditioned spaces or ambient air shall meet the requirements of either Item 1 or 2 below:

1. Ceilings shall be insulated between wood-framing members with insulation resulting in an installed thermal resistance of R-19 or greater for the insulation alone.

   ALTERNATIVE to Section 150 (a) 1: Insulation which is not penetrated by framing members may meet an R-value equivalent to installing R-19 insulation between wood-framing members and accounting for the thermal effects of framing members.

2. The weighted average U-factor of ceilings shall not exceed the U-factor that would result from installing R-19 insulation between wood-framing members in the entire ceiling and accounting for the effects of framing members.

(b) **Loose-fill Insulation**. When loose-fill insulation is installed, the minimum installed weight per square foot shall conform with the insulation manufacturer's installed design weight per square foot at the manufacturer's labeled R-value.

Standards Tables 151-B, 151-C and 151-D

STANDARDS TABLE 151-B COMPONENT PACKAGE C

Climate Zone	1, 16	3	4	5	6	7	8, 9	10	2, 11-13	14	15
BUILDING ENVELOPE											
Insulation minimums[1]											
Ceiling	R49	R38	R38	R38	R38	R38	R38	R49	R49	R49	R49
Wood-frame walls	R29	R25	R25	R25	R21	R21	R21	R25	R29	R29	R29
"Heavy mass" walls	NA	NA	NA	NA	NA	NA	NA	NA	NA	NA	NA
"Light mass" walls	NA	NA	NA	NA	NA	NA	NA	NA	NA	NA	NA
Below-grade walls	NA	NA	NA	NA	NA	NA	NA	NA	NA	NA	NA
Slab floor perimeter	R7	R7	R7	R7	R7	R7	R7	R7	R7	R7	R7
Raised floors	R30	R30	R30	R30	R21	R21	R21	R30	R30	R30	R21
Concrete raised floors	NA	NA	NA	NA	NA	NA	NA	NA	NA	NA	NA
Radiant Barrier	NR	NR	REQ	NR	NR	NR	REQ	REQ	REQ	REQ	REQ
Roofing Products	See TABLE 151-C, COMPONENT PACKAGE D										
FENESTRATION											
Maximum U-factor[2]	0.38	0.38	0.38	0.38	0.38	0.38	0.38	0.38	0.38	0.38	0.38
Maximum Solar Heat Gain Coefficient (SHGC)[3]	NR	0.40	0.40	0.40	0.40	0.40	0.40	0.40	0.40	0.40	0.40
Maximum total area	14%	14%	14%	16%	14%	14%	14%	16%	16%	14%	16%
Maximum West facing area	NR	NR	5%	NR	NR	5%	5%	5%	5%	5%	5%
THERMAL MASS[4]	REQ	REQ	REQ	REQ	REQ	REQ	REQ	REQ	REQ	REQ	REQ
SPACE-HEATING [5]											
Electric-resistant allowed	Yes	Yes	Yes	Yes	Yes	Yes	Yes	Yes	Yes	Yes	Yes
If gas, AFUE =	MIN	MIN	MIN	MIN	MIN	MIN	MIN	MIN	MIN	MIN	MIN
If heat pump, HSPF[6] =	MIN	MIN	MIN	MIN	MIN	MIN	MIN	MIN	MIN	MIN	MIN
SPACE-COOLING											
SEER =	MIN	MIN	MIN	MIN	MIN	MIN	MIN	MIN	MIN	MIN	MIN
If split system, Refrigerant charge measurement or charge indicator display	NR	NR	NR	NR	NR	NR	REQ	REQ	REQ	REQ	REQ
Central Forced Air Handler:	See TABLE 151-C, COMPONENT PACKAGE D										
DUCTS											
Duct sealing	REQ	REQ	REQ	REQ	REQ	REQ	REQ	REQ	REQ	REQ	REQ
Duct Insulation	R-8	R-8	R-8	R-8	R-8	R-8	R-8	R-8	R-8	R-8	R-8
WATER-HEATING	System shall meet Section 151 (f) 8 or Section 151 (b)1[7]										

STANDARDS TABLE 151-C COMPONENT PACKAGE D

	Climate Zone		1	2	3	4	5	6	7	8	9	10	11	12	13	14	15	16
Insulation minimums[1]	Ceilings		R38	R30	R30	R30	R30	R30	R30	R30	R30	R30	R38	R38	R38	R38	R38	R38
	Walls	Wood-frame walls	R21	R13	R13	R13	R13	R13	R13	R13	R13	R13	R19	R19	R19	R21	R21	R21
		Heavy mass walls	R4.76	R2.44	R2.44	R2.44	R2.44	R2.44	R2.44	R2.44	R2.44	R2.44	R4.76	R4.76	R4.76	R4.76	R4.76	R4.76
		Light mass walls	NA	NA	NA	NA	NA	NA	NA	NA	NA	NA	NA	NA	NA	NA	NA	NA
		Below-grade walls	R0	R0	R0	R0	R0	R0	R0	R0	R0	R0	R0	R0	R0	R0	R0	R13
	Floors	Slab floor perimeter	NR	NR	NR	NR	NR	NR	NR	NR	NR	NR	NR	NR	NR	NR	NR	R7
		Raised floors	R19	R19	R19	R19	R19	R19	R19	R19	R19	R19	R19	R19	R19	R19	R19	R19
		Concrete raised floors	R8	R8	R0	R0	R0	R0	R0	R0	R0	R0	R8	R4	R8	R8	R4	R8
Radiant Barrier			NR	REQ	NR	REQ	NR	NR	NR	REQ	REQ	REQ	REQ	REQ	REQ	REQ	REQ	NR
Roofing Products	Low-sloped	Aged Solar Reflectance	NR	NR	NR	NR	NR	NR	NR	NR	NR	NR	NR	NR	0.55	NR	0.55	NR
		Thermal Emittance	NR	NR	NR	NR	NR	NR	NR	NR	NR	NR	NR	NR	0.75	NR	0.75	NR
	Steep Sloped (less than 5 lb/ft²)	Aged Solar Reflectance	NR	NR	NR	NR	NR	NR	NR	NR	NR	0.20	0.20	0.20	0.20	0.20	0.20	NR
		Thermal Emittance	NR	NR	NR	NR	NR	NR	NR	NR	NR	0.75	0.75	0.75	0.75	0.75	0.75	NR
	Steep Sloped (5 lb/ft² or more)	Aged Solar Reflectance	0.15	0.15	0.15	0.15	0.15	0.15	0.15	0.15	0.15	0.15	0.15	0.15	0.15	0.15	0.15	0.15
		Thermal Emittance	0.75	0.75	0.75	0.75	0.75	0.75	0.75	0.75	0.75	0.75	0.75	0.75	0.75	0.75	0.75	0.75
Fenestration	Maximum U-factor[2]		0.40	0.40	0.40	0.40	0.40	0.40	0.40	0.40	0.40	0.40	0.40	0.40	0.40	0.40	0.40	0.40
	Maximum Solar Heat Gain Coefficient (SHGC)[3]		NR	0.40	NR	0.40	0.40	0.40	0.40	0.40	0.40	0.40	0.40	0.40	0.40	0.40	0.35	NR
	Maximum Total Area		20%	20%	20%	20%	20%	20%	20%	20%	20%	20%	20%	20%	20%	20%	20%	20%
	Maximum West Facing Area		NR	5%	NR	5%	NR	NR	5%	5%	5%	5%	5%	5%	5%	5%	5%	NR
THERMAL MASS[4]			NR	NR	NR	NR	NR	NR	NR	NR	NR	NR	NR	NR	NR	NR	NR	NR
SPACE-HEATING [5, 10]	Electric-resistant allowed		No	No	No	No	No	No	No	No	No	No	No	No	No	No	No	No
	If gas, AFUE =		MIN	MIN	MIN	MIN	MIN	MIN	MIN	MIN	MIN	MIN	MIN	MIN	MIN	MIN	MIN	MIN
	If heat pump, HSPF[6] =		MIN	MIN	MIN	MIN	MIN	MIN	MIN	MIN	MIN	MIN	MIN	MIN	MIN	MIN	MIN	MIN
SPACE-COOLING	SEER =		MIN	MIN	MIN	MIN	MIN	MIN	MIN	MIN	MIN	MIN	MIN	MIN	MIN	MIN	MIN	MIN
	If split system, Refrigerant charge measurement or charge indicator display		NR	REQ	NR	NR	NR	NR	NR	REQ	REQ	REQ	REQ	REQ	REQ	REQ	REQ	NR
Central Forced Air Handlers	Cooling Airflow and Watt Draw		NR	NR	NR	NR	NR	NR	NR	NR	NR	REQ[11]	REQ[11]	REQ[11]	REQ[11]	REQ[11]	REQ[11]	NR
	Central Fan Integrated Ventilation System Watt Draw		REQ	REQ	REQ	REQ	REQ	REQ	REQ	REQ	REQ	REQ	REQ	REQ	REQ	REQ	REQ	REQ
DUCTS	Duct sealing		REQ	REQ	REQ	REQ	REQ	REQ	REQ	REQ	REQ	REQ	REQ	REQ	REQ	REQ	REQ	REQ
	Duct Insulation		R-6	R-6	R-6	R-6	R-6	R-4.2	R-4.2	R-4.2	R-6	R-6	R-6	R-6	R-6	R-8	R-8	R-8
WATER-HEATING			System shall meet Section 151(f)8 or Section 151(b)1															

TABLE 151-D COMPONENT PACKAGE E

			Climate Zone															
			1	2	3	4	5	6	7	8	9	10	11	12	13	14	15	16
Insulation minimums[1]	Ceilings		R38	R30	R38	R30	R38	R38	R30	R30	R30	R30	R38	R38	R38	R38	R38	R49
	Walls	Wood-frame walls	R21	R19	R19	R19	R19	R19	R19	R19	R19	R19	R19	R19	R19	R21	R21	R21
		Heavy mass walls	R4.76	R2.44	R2.44	R2.44	R2.44	R2.44	R2.44	R2.44	R2.44	R2.44	R4.76	R4.76	R4.76	R4.76	R4.76	R4.76
		Light mass walls	NA	NA	NA	NA	NA	NA	NA	NA	NA	NA	NA	NA	NA	NA	NA	NA
		Below-grade walls	R0	R0	R0	R0	R0	R0	R0	R0	R0	R0	R0	R0	R0	R0	R0	R13
	Floors	Slab floor perimeter	NR	NR	NR	NR	NR	NR	NR	NR	NR	NR	NR	NR	NR	NR	NR	R7
		Raised floors	R19	R19	R19	R19	R19	R19	R19	R19	R19	R19	R19	R19	R19	R19	R19	R19
		Concrete raised floors	R8	R8	R0	R0	R0	R0	R0	R0	R0	R0	R8	R4	R8	R8	R4	R8
Radiant Barrier			NR	REQ	NR	REQ	NR	NR	NR	REQ	REQ	REQ	REQ	REQ	REQ	REQ	REQ	NR
Roofing Products	Low-sloped	Aged Solar Reflectance	NR	NR	NR	NR	NR	NR	NR	NR	NR	NR	NR	NR	0.55	NR	0.55	NR
		Thermal Emittance	NR	NR	NR	NR	NR	NR	NR	NR	NR	NR	NR	NR	0.75	NR	0.75	NR
	Steep Sloped (less than 5 lb/ft²)	Aged Solar Reflectance	NR	NR	NR	NR	NR	NR	NR	NR	NR	0.20	0.20	0.20	0.20	0.20	0.20	NR
		Thermal Emittance	NR	NR	NR	NR	NR	NR	NR	NR	NR	0.75	0.75	0.75	0.75	0.75	0.75	NR
	Steep Sloped (5 lb/ft² or more)	Aged Solar Reflectance	0.15	0.15	0.15	0.15	0.15	0.15	0.15	0.15	0.15	0.15	0.15	0.15	0.15	0.15	0.15	0.15
		Thermal Emittance	0.75	0.75	0.75	0.75	0.75	0.75	0.75	0.75	0.75	0.75	0.75	0.75	0.75	0.75	0.75	0.75
Fenestration	Maximum U-factor[2]		0.50[8]	0.57	0.57	0.57	0.57	0.57	0.57	0.57	0.57	0.57	0.57	0.57	0.57	0.57	0.57	0.45[9]
	Maximum Solar Heat Gain Coefficient (SHGC)[3]		NR	0.40	0.40	0.25	0.40	0.40	0.25	0.40	0.40	0.40	0.25	0.25	0.30	0.25	0.25	NR
	Maximum Total Area		20%	20%	20%	20%	20%	20%	20%	20%	20%	20%	20%	20%	20%	20%	20%	20%
	Maximum West Facing Area		NR	5%	NR	5%	NR	NR	5%	5%	5%	5%	5%	5%	5%	5%	5%	NR
THERMAL MASS[4]			NR	NR	NR	NR	NR	NR	NR	NR	NR	NR	NR	NR	NR	NR	NR	NR
SPACE-HEATING [5, 10]	Electric-resistant allowed		No	No	No	No	No	No	No	No	No	No	No	No	No	No	No	No
	If gas, AFUE =		MIN[8]	MIN	MIN	MIN	MIN	MIN	MIN	MIN	MIN	MIN	MIN	MIN	MIN	MIN	MIN	MIN[9]
	If heat pump, HSPF[6] =		MIN[8]	MIN	MIN	MIN	MIN	MIN	MIN	MIN	MIN	MIN	MIN	MIN	MIN	MIN	MIN	MIN[9]
SPACE-COOLING	SEER =		MIN	MIN	MIN	MIN	MIN	MIN	MIN	MIN	MIN	MIN	MIN	MIN	MIN	MIN	MIN	MIN
	If split system, Refrigerant charge measurement or charge indicator display		NR	REQ	NR	NR	NR	NR	NR	REQ	REQ	REQ	REQ	REQ	REQ	REQ	REQ	NR
Central Forced Air Handlers	Cooling Airflow and Watt Draw		NR	NR	NR	NR	NR	NR	NR	NR	NR	REQ[11]	REQ[11]	REQ[11]	REQ[11]	REQ[11]	REQ[11]	NR
	Central Fan Integrated Ventilation System Watt Draw		REQ	REQ	REQ	REQ	REQ	REQ	REQ	REQ	REQ	REQ	REQ	REQ	REQ	REQ	REQ	REQ
DUCTS	Duct sealing		REQ	REQ	REQ	REQ	REQ	REQ	REQ	REQ	REQ	REQ	REQ	REQ	REQ	REQ	REQ	REQ
	Duct Insulation		R-8	R-6	R-8	R-6	R-6	R-4.2	R-4.2	R-4.2	R-6	R-6	R-8	R-8	R-8	R-8	R-8	R-8
WATER-HEATING			System shall meet Section 151(f)8 or Section 151(b)1															

Footnote requirements to TABLE 151-B, TABLE 151-C and TABLE 151-D.

1 The R-values shown for ceiling, wood frame wall and raised floor are for wood-frame construction with insulation installed between the framing members. For alternative construction assemblies, see Section 151(f)1A.

The heavy mass wall R-value in parentheses is the minimum R-value for the entire wall assembly if the wall weight exceeds 40 pounds per square foot. The light mass wall R-value in brackets is the minimum R-value for the entire assembly if the heat capacity of the wall meets or exceeds the result of multiplying the bracketed minimum R-value by 0.65. Any insulation installed on heavy or light mass walls must be integral with, or installed on the outside of, the exterior mass. The inside surface of the thermal mass, including plaster or gypsum board in direct contact with the masonry wall, shall be exposed to the room air. The exterior wall used to meet the R-value in parentheses cannot also be used to meet the thermal mass requirement.

2 The installed fenestration products shall meet the requirements of Section 151(f)3.

3 The installed fenestration products shall meet the requirements of Section 151(f)4.

4 If the package requires thermal mass, the thermal mass shall meet the requirements of Section 151(f)5.

5 Thermostats shall be installed in conjunction with all space-heating systems in accordance with Section 151(f)9.

6 HSPF means "heating seasonal performance factor."

7 Electric-resistance water heating may be installed as the main water heating source in Package C only if the water heater is located within the building envelope and a minimum of 25 percent of the energy for water heating is provided by a passive or active solar system.

8 As an alternative under Package E in climate zone 1, glazing with a maximum 0.57 U-factor and a 92% AFUE furnace or an 8.4 HSPF heat pump may be substituted for the Package E glazing U-factor requirement. All other requirements of Package E must be met.

9 As an alternative under Package E in climate zone 16, glazing with a maximum 0.57 U-factor and a 90% AFUE furnace or an 8.4 HSPF heat pump may be substituted for may be substituted for the Package E glazing U-factor requirement. All other requirements of Package E must be met.

10 A supplemental heating unit may be installed in a space served directly or indirectly by a primary heating system, provided that the unit thermal capacity does not exceed two kilowatts or 7,000 Btu/hr and is controlled by a time-limiting device not exceeding 60 minutes.

STANDARDS SECTION 152 (a) and 152 (b)

(a) **Additions**. Additions to existing residential buildings shall meet the requirements of Sections 111 through 118, Section 119, and Section 150, and either Section 152(a)1 or 2.

1. **Prescriptive approach**. Additions to existing buildings shall meet the following additional requirements:

   A. Fenestration in additions up to 100 square feet shall not have more than 50 square feet of fenestration area, and shall meet the U-factor and Solar Heat Gain Coefficient requirements of Package D (Sections 151(f)3A, 151(f)4 and TABLE 151-C) or

   B. Additions up to 1000 square feet shall meet all the requirements of Package D (Section 151(f) and TABLE 151-C), except that the addition's total glazing area limit is the maximum allowed in Package D plus the glazing area that was removed as a result of the construction of the addition, and the wall insulation value need not exceed R-13.

   EXCEPTION TO SECTION 152(a)1B: In climate zones 2, 4, 7-15 the total allowed west-facing glazing area shall be five percent of the conditioned floor area of the addition plus the amount of west-facing glazing removed from the existing building as a result of the construction of the addition.

   C. Additions of more than 1000 square feet shall meet all the requirements of Package D (Section 151(f) and Package D (Section 151(f) and TABLE 151-C).

2. **Performance approach**. Performance calculations shall meet the requirements of Section 151(a) through (e), pursuant to either Item A or B, below.

   A. For additions alone, the addition complies if the addition alone meets the combined water-heating and space-conditioning energy budgets as specified in Section 151(b).

   B. For existing plus addition plus alteration compliance. The energy use of the combination of the altered existing building plus the proposed addition shall be equal to or less than the energy use of the existing building with all alterations meeting the requirements of 152(b)2, plus the standard energy budget of an addition that complies with Sections 151(a) through (e). When determining the standard design, the fenestration area shall be the smaller of the sum of the installed fenestration area up to 20 percent of the conditioned floor area of the addition plus glass removed from the existing building as a result of the construction of the addition or the proposed glass area in the addition.

EXCEPTION 1 to Section 152(a): Existing structures with R-11 framed walls showing compliance with Section 152(a)2 (Performance Approach) are exempt from Section 150(c).

EXCEPTION 2 to Section 152(a): If the addition will increase the total number of water heaters in the building, one of the following types of water heaters may be installed to comply with Section 152(a)1 or Section 152(a)2A:

1. A gas storage non-recirculating water heating system that does not exceed 50 gallons capacity; or

2. If no natural gas is connected to the building, an electric storage water heater that does not exceed 50 gallons capacity, has an energy factor not less than 0.90; or

3. A water heating system determined by the executive director to use no more energy than the one specified in Item 1 above; or if no natural gas is connected to the building, a water heating system determined by the executive director to use no more energy than the one specified in Item 2 above.

For prescriptive compliance with Section 152(a)1, the water heating systems requirement in Section 151(f)8 shall not apply. For performance compliance for the addition alone, only the space-conditioning budgets of Section 151(b)2 shall be used; the water-heating budgets of Section 151(b)1 shall not apply.

The performance approach for the existing building and the addition in Section 152(a)2B may be used to show compliance, regardless of the type of water heater installed.

EXCEPTION 3 to Section 152(a): When heating and/or cooling will be extended to an addition from the existing system(s), the existing heating and cooling equipment need not comply with Title 24, Part 6. The heating system capacity must be adequate to meet the minimum requirements of CBC Section 1204.

EXCEPTION 4 to Section 152(a): When ducts will be extended from an existing duct system to serve the addition, the ducts shall meet the requirements of Section 152(b)1D.

EXCEPTION 5 to Section 152(a): Additions 1,000 square feet or less are exempt from the requirements of Section 150(o). For additions larger than 1,000 ft², application of Section150(o) shall be based on the conditioned floor area of the entire dwelling unit, not just the addition.

(b) **Alterations**. Alterations to existing residential buildings or alterations in conjunction with a change in building occupancy to a low-rise residential occupancy shall meet either Item 1 or 2 below.

1. **Prescriptive approach.** The altered component and any newly installed equipment serving the alteration shall meet the applicable requirements of Sections 110 through 118, Section 119, and Section 150(a) through 150(p); and

   A. Alterations that add fenestration area shall meet the U-factor requirements of Package D (Section 151(f)3A and Table 151-C), the total fenestration area and west–facing fenestration area requirements of Package D (Section 151(f)3B and C and Table 151-C), and the Solar Heat Gain coefficient requirements of Package D (Section 151(f)4 and Table 151-C).

   EXCEPTION to Section 152(b)1A: Alterations that add fenestration area of up to 50 square feet shall not be required to meet the total fenestration area and west-facing fenestration area requirements of Section 151(f)3B and C. The existing west-facing fenestration area shall not be increased by more than 50 square feet.

   B Replacement fenestration, where existing glazing is replaced with a new manufactured fenestration product in the same orientation and tilt, shall meet the U-factor and Solar Heat Gain Coefficient requirements of Package D (Sections 151(f)3A and 151(f)4 and Table 151-C).

   NOTE: Glass replaced in an existing sash and frame, or replacement of a single sash in a multi-sash fenestration product are considered repairs.

C. New or replacement space-conditioning systems shall:

i. Meet the requirements of Sections 150(h), 150(i), 150(j)2, 151(f)6, 151(f)7, and 151(f)9; and

ii. Be limited to natural gas, liquefied petroleum gas, or the existing fuel type unless it can be demonstrated that the TDV energy use of the new system is more efficient than the existing system.

D. When more than 40 feet of new or replacement space-conditioning ducts are installed in unconditioned space, the new ducts shall meet the requirements of Section 150(m) and the duct insulation requirements of Package D Section 151(f)10. If ducts are installed in climate zones 2, 9, 10, 11, 12, 13, 14, 15, or 16, the duct system shall be sealed, as confirmed through field verification and diagnostic testing in accordance with procedures for duct sealing of existing duct systems as specified in the Reference Residential Appendix RA3, to meet one of the following requirements:

i. If the new ducts form an entirely new duct system directly connected to the air handler, the measured duct leakage shall be less than 6% of fan flow and meet the airflow requirements of Reference Residential Appendix RA3; or

ii. If the new ducts are an extension of an existing duct system, the combined new and existing duct system shall meet one of the following requirements:

a. The measured duct leakage shall be less than 15% of system fan flow; or

b. The measured duct leakage to outside shall be less than 10% of system fan flow; or

c. The duct leakage shall be reduced by more than 60% relative to the leakage prior to the installation of the new ducts and a visual inspection, including a smoke test, shall demonstrate that all accessible leaks have been sealed; or

d. If it is not possible to meet the duct sealing requirements of Subsection a, b, or c, all accessible leaks shall be sealed and verified through a visual inspection and a smoke test by a certified HERS rater.

EXCEPTION to Section 152(b)1Dii: Existing duct systems that are extended, which are constructed, insulated or sealed with asbestos.

E. In climate zones 2, 9, 10, 11, 12, 13, 14, 15, and 16, when a space-conditioning system is altered by the installation or replacement of space-conditioning equipment (including replacement of the air handler, outdoor condensing unit of a split system air conditioner or heat pump, cooling or heating coil, or the furnace heat exchanger) the duct system that is connected to the new or replacement space-conditioning equipment shall be sealed, as confirmed through field verification and diagnostic testing in accordance with procedures for duct sealing of existing duct systems as specified in the Reference Residential Appendix RA3, to one of the following requirements.

i. The measured duct leakage shall be less than 15% of f system an flow; or

ii. The measured duct leakage to outside shall be less than 10% of system fan flow; or

iii. The measured duct leakage shall be reduced by more than 60% relative to the measured leakage prior to the installation or replacement of the space conditioning equipment and a visual inspection, including a smoke test, shall demonstrate that all accessible leaks have been sealed; or

iv. If it is not possible to meet the duct requirements of i, ii, or iii, all accessible leaks shall be sealed and verified through a visual inspection and a smoke test by a certified HERS rater.

EXCEPTION 1 to Section 152(b)1E: Duct systems that are documented to have been previously sealed as confirmed through field verification and diagnostic testing in accordance with procedures in the Reference Residential Appendix RA3.

EXCEPTION 2 to Section 152(b)1E: Duct systems with less than 40 linear feet in unconditioned spaces.

EXCEPTION 3 to Section 152(b)1E: Existing duct systems constructed, insulated or sealed with asbestos.

F. When a space-conditioning system is altered by the installation or replacement of the air handler, outdoor condensing unit of a split system air conditioner or heat pump, cooling or heating coil, or the furnace heat exchanger, the following requirements shall be met:

i. Non-setback thermostats shall be replaced with setback thermostats meeting the requirements of Section 112(c); and

ii. Meet the refrigerant charge and airflow requirements of Reference Residential Appendix RA3.

EXCEPTION to Section 152(b)1Fii: Heating only systems need not comply with this requirement.

G. New service water-heating systems or components shall:

i. Meet the requirements of Section 150; and

ii. Be limited to natural gas, liquefied petroleum gas, or the existing fuel type unless it can be demonstrated that the TDV energy use of the new system is more efficient than the existing system.

H. Replacements of the exterior surface of existing roofs shall meet the requirements of Section 118 and the applicable requirements of Subsections i through iii where more than fifty percent of the roof or more than 1,000 square feet of roof, whichever is less, is being replaced:

i. For Steep-sloped roofs, roofing products with a density of less than five pounds per square foot in climate zones 10 through 15 shall have a minimum aged solar reflectance of 0.20 and a minimum thermal emittance of 0.75, or a minimum SRI of 16.

ii. For steep-sloped roofs, roofing products with a density of five pounds per square foot or more in climate zones 1 through 16 shall have a minimum aged solar reflectance of 0.15 and a minimum thermal emittance of 0.75, or a minimum SRI of 10.

ALTERNATIVE TO SECTION 152(b)1Hi and ii: The following shall be considered equivalent to Subsection i and ii:

a. Insulation with a thermal resistance of at least 0.85 hr·ft^2·°F/Btu or at least a 3/4 inch air-space is added to the roof deck over an attic or

b. Existing ducts in the attic are insulated and sealed according to Section 151(f)10; or

c. In climate zones 10, 12 and 13, with 1 ft^2 of free ventilation area of attic ventilation for every 150 ft^2 of attic floor area, and where at least 30% of the free ventilation area is within two feet vertical distance of the roof ridge; or

d. Buildings with at least R-30 ceiling insulation; or

e. Buildings with a radiant barrier in the attic meeting the requirements of Section 151(f)2; or

f. Buildings that have no ducts in the attic; or

g. In climate zones 10, 11, 13 and 14, R-3 or greater roof deck insulation above vented attic.

iii. Low-sloped roofs in climate zones 13 and 15 shall have a 3-year aged solar reflectance equal or greater than 0.55 and a thermal emittance equal or greater than 0.75, or a minimum SRI of 64.

EXCEPTION to Section 152(b)1Hiii: Buildings with no ducts in the attic.

2. **Performance approach.**

A. The altered components shall meet the applicable requirements of Sections 110 through 118, Section 119, and Section 150(a) through (p); and

B. When the altered components do not meet the requirements specified in the Sections that are stated in subsections i through viii, the standard energy budget (energy budget) shall be based on the requirements stated in those Sections as follows:

i. Ceiling Insulation. The energy budget shall be based on the requirements of Section 118(d).

ii. Wall Insulation. The energy budget shall be based on the requirements of Section 150(c).

iii. Raised-floor Insulation. The energy budget shall be based on the requirements of Section 150(d).

iv. Fenestration. The energy budget shall be based on the U-factor and SHGC value requirements of Table 151-C. The allowed glass area shall be the glass area of the existing building.

v. Space-Heating and Space-Cooling Equipment. The energy budget shall be based on the requirements of Table 151-C.

vi. Ducts. The energy budget shall be based on the requirements of Section 152(b)1D.

vii. Water Heating Systems. The energy budget shall be based on requirements of Section 151(b)1.

viii. Roofing Products. The energy budget shall be based on Section 152(b)1H.

C. When the altered components meet the requirements specified in Section 152(b)2B, subsections i through viii, the standard energy budget shall be based on existing conditions.

NOTES TO SECTION 152(b)2:

A. If an existing component must be replaced with a new component, that component is considered an altered component for the purpose of determining the energy budget and must meet the requirements of Section 152(b)2B.

B. The proposed design shall be based on the actual values of the altered components.

C. The standard design shall assume the same geometry and orientation as the proposed design.

EXCEPTION to Section 152(b): Any dual-glazed greenhouse window installed as part of an alteration complies with the U-factor requirements in Section 151(f)3.

Residential Table – Vintage Table Values

TABLE R 3-50 – DEFAULT ASSUMPTIONS FOR EXISTING BUILDINGS – VINTAGE TABLE VALUES

Default Assumptions for Year Built (Vintage)

Conservation Measure	Before 1978	1978 to 1983	1984 to 1991	1992 to 1998	1999 - 2000	2001-2003	2004-2005	2006 and Later
INSULATION U-FACTOR								
Roof/Ceiling	0.079	0.049	0.049	0.049	0.049	0.049	0.049	0.049
Wall	0.356	0.110	0.110	0.102	0.102	0.102	0.102	0.102
Raised Floor –Crawl Space	0.099	0.099	0.099	0.046	0.046	0.046	0.046	0.046
Cool Roof	0.10	0.10	0.10	0.10	0.10	0.10	0.10	Pres Pkg.
Radiant Barrier	None	None	None	None	None	None	Pres Pkg.	Pres Pkg.
Raised Floor-No CrawlSp	0.238	0.238	0.238	0.064	0.064	0.064	0.064	0.064
Slab Edge F-factor =	0.73	0.73	0.73	0.73	0.73	0.73	0.73	0.73
Ducts	R-2.1	R-2.1	R-2.1	R-4.2	R-4.2	R-4.2	R-4.2	Pres Pkg.
LEAKAGE								
Building (SLA)	4.9	4.9	4.9	4.9	4.9	4.9	4.9	4.9
Duct Leakage Factor (See Table 4-13)	0.86	0.86	0.86	0.86	0.86	0.89	0.89	0.89
FENESTRATION								
U-factor	Use Table 116-A - Title 24, Part 6, Section 116 for all Vintages							
SHGC	Use Table 116-B - Title 24, Part 6, Section 116 for all Vintages							
Shading Dev.	Use Table R3-27 and R3-28 for all Vintages in the Residential ACM Manual – Performance Approach							
SPACE HEATING EFFICIENCY								
Gas Furnace (Central) AFUE	0.75	0.78	0.78	0.78	0.78	0.78	0.78	0.78
Gas Heater (Room) AFUE	0.65	0.65	0.65	0.65	0.65	0.65	0.65	0.65
Hydronic/Comb Hydronic	0.78	0.78	0.78	0.78	0.78	0.78	0.78	0.78
Heat Pump HSPF	5.6	5.6	6.6	6.6	6.8	6.8	6.8	7.4
Electric Resistance HSPF	3.413	3.413	3.413	3.413	3.413	3.413	3.413	3.413
Electric Resistance Radiant HSPF	3.55	3.55	3.55	3.55	3.55	3.55	3.55	3.55
SPACE COOLING EFFICIENCY								
All Types, SEER	8.0	8.0	8.9	9.7	9.7	9.7	9.7	13.0
WATER HEATING								
Energy Factor	0.525	0.525	0.525	0.525	0.575	0.575	0.575	0.575

Appliance Efficiency Standards

Table F-3
Standards for Large Water Heaters

Appliance	*Input to Volume Ratio*	*Size (Volume)*	*Minimum Thermal Efficiency (%)*	*Maximum Standby Loss*[1,2]
Gas storage water heaters	< 4,000 Btu/hr/gal	any	80	$Q/800 + 110(V_r)^{1/2}$ Btu/hr
Gas instantaneous water heaters	≥ 4,000 Btu/hr/gal	< 10 gal	80	–
		≥ 10 gal	80	$Q/800 + 110(V_r)^{1/2}$ Btu/hr
Gas hot water supply boilers	≥ 4,000 Btu/hr/gal	< 10 gal	80	–
		≥ 10 gal	80	$Q/800 + 110(V_r)^{1/2}$ Btu/hr
Oil storage water heaters	< 4,000 Btu/hr/gal	any	78	$Q/800 + 110(V_r)^{1/2}$ Btu/hr
Oil instantaneous water heaters	≥ 4,000 Btu/hr/gal	< 10 gal	80	–
		≥ 10 gal	78	$Q/800 + 110(V_r)^{1/2}$ Btu/hr
Oil hot water supply boilers	≥ 4,000 Btu/hr/gal	< 10 gal	80	–
		≥ 10 gal	78	$Q/800 + 110(V_r)^{1/2}$ Btu/hr
Electric storage water heaters	< 4,000 Btu/hr/gal	any	–	$0.3 + 27/V_m$ %/hr

[1] *Standby loss is based on a 70° F temperature difference between stored water and ambient requirements. In the standby loss equations, V_r is the rated volume in gallons, V_m is the measured volume in gallons, and Q is the nameplate input rate in Btu/hr.*

[2] *Water heaters and hot water supply boilers having more than 140 gallons of storage capacity are not required to meet the standby loss requirement if the tank surface is thermally insulated to R-12.5, if a standing pilot light is not installed, and for gas- or oil-fired storage water heaters, there is a flue damper or fan-assisted combustion.*

Table F-4

Standards for Small Federally-Regulated Water Heaters

Appliance	***Minimum Energy Factor***	
	Effective April 15, 1991	***Effective January 20, 2004***
Gas-fired storage-type water heaters	0.62 – (.0019 x V)	0.67 – (.0019 x V)
Oil-fired water heaters (storage and instantaneous)	0.59 – (.0019 x V)	0.59 – (.0019 x V)
Electric storage water heaters (excluding tabletop water heaters)	0.93 – (.00132 x V)	0.97 – (.00132 x V)
Electric tabletop water heaters	0.93 – (.00132 x V)	0.93 – (.00132 x V)
Gas-fired instantaneous water heaters	0.62 – (.0019 x V)	0.62 – (.0019 x V)
Electric instantaneous water heaters (excluding tabletop water heaters)	0.93 – (.00132 x V)	0.93 – (.00132 x V)
Heat pump water heaters	0.93 – (.00132 x V)	0.97 – (.00132 x V)
V = rated volume in gallons.		

Appendix C

NATURAL GAS APPLIANCE TESTING (NGAT) STANDARDS

The NGAT standards, "Natural Gas Appliance Testing (NGAT) Standards", are found in Section 24 of the "California Conventional Home Weatherization Installation Standards" manual (WIS); edition dated April 1, 2006. A copy may be obtained from contacting:

James E. O'Bannon

Richard Heath and Associates

1026 Mangrove Avenue, Suite 20

Chico, CA 95926

Phone: (530) 898-1323

Fax: (530) 898-1325

email: jim@rhainc.com

Appendix D

Eligibility Criteria for Radiant Barriers

Radiant barriers shall meet specific eligibility and installation criteria to be modeled by any ACM and receive energy credit for compliance with the energy efficiency standards for low-rise residential buildings.

- The emittance of the radiant barrier shall be less than or equal to 0.05 as tested in accordance with ASTM C-1371 or ASTM E-408.
- Installation shall conform to ASTM C-1158 [Standard Practice For Use and Installation Of Radiant Barrier Systems (RBS) In Building Construction.], ASTM C-727 (Standard Practice For Installation and Use Of Reflective Insulation In Building Constructions.), ASTM C-1313 (Standard Specification for Sheet Radiant Barriers for Building Construction Applications), and ASTM C-1224 (Standard Specification for Reflective Insulation for Building Applications). The radiant barrier shall be securely installed in a permanent manner with the shiny side facing down toward the interior of the building (ceiling or attic floor). Moreover, radiant barriers shall be installed at the top chords of the roof truss/rafters in ***any*** of the following methods:
    1. Draped over the truss/rafter (the top chords) before the upper roof decking is installed.
    2. Spanning between the truss/rafters (top chords) and secured (stapled) to each side.
    3. Secured (stapled) to the bottom surface of the truss/rafter (top chord). A minimum air space shall be maintained between the top surface of the radiant barrier and roof decking of not less than 1.5 inches at the center of the truss/rafter span.
    4. Attached [laminated] directly to the underside of the roof decking. The radiant barrier shall be laminated and perforated by the manufacturer to allow moisture/vapor transfer through the roof deck.

       In addition, the radiant barrier shall be installed to cover all gable end walls and other vertical surfaces in the attic.
- The attic shall be ventilated to:
    1. Conform to the radiant barrier manufacturer's instructions.
    2. Provide a minimum free ventilation area of not less than one square foot of vent area for each 150 square feet of attic floor area.
    3. Provide no less than 30 percent upper vents.

       Ridge vents or gable end vents are recommended to achieve the best performance. The material should be cut to allow for full airflow to the venting.

- The radiant barrier (except for radiant barriers laminated directly to the roof deck) shall be installed to have a minimum gap of 3.5 inches between the bottom of the radiant barrier and the top of the ceiling insulation to allow ventilation air to flow between the roof decking and the top surface of the radiant barrier, and have a minimum of six (6) inches (measured horizontally) left at the roof peak to allow hot air to escape from the air space between the roof decking and the top surface of the radiant barrier.
- When installed in enclosed rafter spaces where ceilings are applied directly to the underside of roof rafters, a minimum air space of 1 inch shall be provided between the radiant barrier and the top of the ceiling insulation, and ventilation shall be provided for every rafter space. Vents shall be provided at both the upper and lower ends of the enclosed rafter space.
- The product shall meet all requirements for California certified insulation materials (radiant barriers) of the Department of Consumer Affairs, Bureau of Home Furnishings and Thermal Insulation, as specified by CCR, Title 24, Part 12, Chapter 12-13, Standards for Insulating Material.
- The use of a radiant barrier shall be listed in the *Special Features and Modeling Assumptions* listings of the CF-1R and described in detail in the ACM Compliance Supplement.