4 Building HVAC Requirements

4.1 Overview

4.1.1 Introduction and Organization

This chapter addresses the requirements for heating, ventilating, and air conditioning (HVAC) systems. The requirements are presented in this chapter so that it may serve as a single source of information for mechanical engineers and mechanical contractors.

The chapter is organized under the following topics:

1. Heating Equipment. The first section addresses the requirements for heating equipment, including mandatory measures, prescriptive requirements, and compliance options.
2. Cooling Equipment. The second section addresses cooling equipment requirements.
3. Air Distribution Ducts and Plenums. This section covers mandatory requirements such as duct insulation and duct system construction practices. This section also covers prescriptive requirements such as duct diagnostic testing and sealing, and specifications for access holes in the supply and return plenums to accommodate pressure and temperature measurements by installers and HERS raters.
4. Controls. This section addresses the requirements for thermostats and the compliance option for zonal control.
5. This section covers mandatory requirements for indoor air quality including mechanical ventilation. All low-rise residential buildings are required to have mechanical ventilation complying with ASHRAE Standard 62.2.
6. Alternative Systems. This section covers a number of systems that are less common in California new construction, including hydronic heating, radiant floor systems, evaporative cooling, gas cooling, ground-source heat pumps, and wood space heating.
7. Compliance and Enforcement. In this section the documentation requirements at each phase of the project are highlighted.
8. Refrigerant Charge Testing. More information on the refrigerant charge testing procedure is included in this section, Glossary/Reference.
9. Chapter 8 covers the heating and cooling requirements for additions to existing dwellings and for alterations to existing heating and cooling systems.

4.1.2 Prescriptive Packages

The prescriptive requirements for HVAC systems vary depending on the prescriptive package selected. Both packages D and E are to be used for low-rise residential buildings that have natural gas available to them. Building envelope and duct insulation requirements differ between these two packages, but field verification and diagnostic testing of the duct system is required for all climate zones in both packages.

Package C permits electric resistance space heating, but requires significantly greater insulation levels and other measures when compared to packages D and E. Field verification and diagnostic testing of ducts is also required in all climate zones under Package C.

4.1.3 Performance Method

By using the performance compliance method, designers can take credit for a number of HVAC efficiency improvements. These compliance credits are described below under the individual Compliance Options sections. Examples of measures that receive credit include improved equipment efficiency, reduced air handler fan watt draw, good duct design, cooling coil airflow, and properly sized cooling capacity.

In addition to offering compliance credits, the performance method described in Chapter 7 provides flexibility for designs that do not necessarily meet all the prescriptive requirements.

4.1.4 What's New for 2008

The following is a summary of the new HVAC measures for 2008. The following summary also includes new compliance options that provide greater flexibility in complying with the Standards when using the performance method:

1. A new prescriptive package is introduced, package E. This package requires an increase in duct insulation from R-6 to R-8, when compared to package D, in climate zones 1, 3, and 11 through 13.
2. Package D no longer contains alternatives to duct sealing; rather duct sealing is a prescriptive requirement in all climate zones for all prescriptive packages C, D and E.
3. Performance compliance credits are available for Low Leakage Ducts in conditioned space and Low Leakage Air Handlers (Furnaces).
4. For split system air conditioners in climate zones 2 and 8 through 15, refrigerant charge measurement is a prescriptive requirement. Thermostatic expansion valves can no longer serve as an alternative to the refrigerant charge verification requirement. However, the installation of a charge indicator display can serve as an alternative.
5. All prescriptive packages with central forced air handlers in climate zones 10 through 15 are required to meet the cooling coil airflow

and fan watt draw criteria. See Reference Residential Appendix RA3.3.

6. Compliance performance credits are available for cooling coil airflows that exceed the prescriptive requirements and for fan watt draws that are less than the prescriptive requirements.
7. Energy Commission sponsored research in California homes has shown that a significant number of home occupants do not regularly open their windows for ventilation. Starting with the 2008 update, it is mandatory to meet the requirements of ASHRAE Standard 62.2 which include mechanical ventilation and minimum openable window area requirements. This mandatory measure is discussed in greater detail in Section 3.5. Also see Section 4.6 for mechanical ventilation requirements.
8. If a central fan integrated ventilation system is used to meet the ASHRAE 62.2 Standard, the watt draw of the furnace fan in ventilation mode is limited.
9. Added to the compliance performance credit for air conditioners with EERs higher than the prescriptive standard are credits for evaporatively cooled condenser systems and ice storage systems.
10. The maximum rated total cooling capacity performance credit has been modified.

4.1.5 Common System Types

The typical new California home in the central valley and the desert has a gas furnace and a split system air conditioner. In some areas, a heat pump provides both heating and cooling, eliminating the furnace. In coastal climates and in the mountains, air conditioning is rare and most new homes are heated by gas furnaces. Heating and cooling is typically distributed to each of the rooms through air ducts. Most of the mandatory measures and prescriptive requirements are based on this type of system.

Although the Standards focus on the typical system, they also apply to other systems as well, including hydronic systems where hot water is distributed to provide at least some of the heat to conditioned space; in contrast with ducted systems that distribute heated air to heat the space. Electric resistance systems are also used in some areas and applications, although it is difficult for them to comply under the Standards. Ground-source heat pump (geo-exchange) systems are also used, especially in areas where there is no gas service. This chapter focuses mostly on typical systems, but a section is provided to deal with the alternative systems as well.

4.1.6 Appliance Standards and Equipment Certification

§110 – General

§111 – Appliance Efficiency Regulations

Most heating and cooling equipment installed in new California homes is regulated by the National Appliance Efficiency Conservation Act (NAECA) and/or the California *Appliance Efficiency Regulations*. Both the federal and state

appliance standards apply to the manufacture of new equipment and are applicable for equipment used in replacements, repairs or for any other purpose. The Appliance Efficiency Regulations are enforced at the point of sale, while the Energy Efficiency Standards covered by this compliance manual are enforced by the enforcement agency.

The following types in the table of heating and cooling equipment are covered by the Appliance Efficiency Regulations. For this equipment, the manufacturer must certify that the equipment complies with the *Appliance Efficiency Regulations* at the time of manufacture.

Appliances Covered by the Appliance Efficiency Regulations:

• Room air conditioners • Room air conditioning heat pumps • Central air conditioners with a cooling capacity of less than 135,000 Btu/hr • Central air conditioning heat pumps	• Gas-fired central furnaces • Gas-fired boilers • Gas-fired furnaces • Gas-fired floor furnaces • Gas-fired room heaters • Gas-fired duct furnaces • Gas-fired unit heaters

The Appliance Efficiency Regulations do not require certification for:

- Infrared heaters
- Electric resistance heaters
- Oil-fired furnaces (some are voluntarily listed with certified gas-fired furnaces).

Equipment that does not meet the Federal Appliance Efficiency Standards may not be sold in California. Any equipment covered by the *Appliance Efficiency Regulations* and sold in California must have the date of manufacture permanently displayed in an accessible place on that equipment. This date is frequently included as part of the serial number.

Note: Equipment manufactured before the effective date of a new standard may be sold and installed in California indefinitely, as long as the performance and prescriptive approach demonstrates energy compliance of the building using the lower efficiency of the relevant appliances.

4.2 Heating Equipment

This section addresses the requirements for heating equipment, including furnaces, boilers, heat pumps and electric resistance equipment.

4.2.1 Mandatory Measures

Equipment Efficiency

§111 and §112(a)

Appliance Efficiency Regulations

The efficiency of most heating equipment is regulated by NAECA (the federal appliance standard) and the California Appliance Efficiency Regulations. These regulations are not contained in the Building Energy Efficiency Standards but are published separately. These regulations are referenced in §111. The Appliance Efficiency Regulations include definitions for all types of equipment. The energy efficiency of larger equipment is regulated by §112(a). Also, see the Nonresidential Compliance Manual for more information on larger equipment.

Gas and Oil Space Heaters

The current Appliance Efficiency Regulations require that the Annual Fuel Utilization Efficiency (AFUE) of all new central furnaces be at least 78 percent for equipment with output capacity less than 225,000 Btu/hr. Central furnaces with outputs greater than or equal to 225,000 Btu/hr are rated according to their Thermal (or Steady State) Efficiency. Gas and oil-fired central boilers have the following AFUE or Combustion Efficiency requirements listed in Table 4-1.

Table 4-1 – Minimum Heating Efficiency for Boilers

Type	Capacity	AFUE	Combustion Efficiency
Gas Steam Boilers (Single Phase)	Less than 300,000 Btu/h	75%	
Gas Packaged Boilers	300,000 Btu/h or larger		80%
Other Boilers (Single Phase)	Less than 300,000 Btu/h	80%	
Oil Package Boilers	300,000 Btu/h or larger		83%

Source: California Appliance Efficiency Regulations Table E-3

Non-central gas space heaters shall be certified to have AFUE values greater than or equal to those listed in Table 4-2 below:

Table 4-2 – Minimum Heating Efficiency for Non-Ducted, Non-Central Gas Fired Heating Equipment

Type	Capacity	AFUE
Wall Furnace (fan type)	up to 42,000 Btu/hour	73%
	over 42,000 Btu/hour	74%
Wall Furnace (gravity type)	up to 10,000 Btu/hour	59%
	over 10,000 Btu/hour up to 12,000 Btu/hour	60%
	over 12,000 Btu/hour up to 15,000 Btu/hour	61%
	over 15,000 Btu/hour up to 19,000 Btu/hour	62%
	over 19,000 Btu/hour up to 27,000 Btu/hour	63%
	over 27,000 Btu/hour up to 46,000 Btu/hour	64%
	over 46,000 Btu/hour	65%
Floor Furnace	up to 37,000 Btu/hour	56%
	over 37,000 Btu/hour	57%
Room Heater	up to 18,000 Btu/hour	57%
	over 18,000 Btu/hour up to 20,000 Btu/hour	58%
	over 20,000 Btu/hour up to 27,000 Btu/hour	63%
	over 27,000 Btu/hour up to 46,000 Btu/hour	64%
	over 46,000 Btu/hour	65%

Source: California Appliance Efficiency Regulations Table E-2

The AFUE of mobile home furnaces shall be certified not to be less than 75 percent.

Heat Pumps and Electric Heating

Table 4-3 summarizes the energy efficiency requirements for heat pumps. There are no minimum appliance efficiency standards for electric-resistance or electric-radiant heating systems.

Table 4-3 – Minimum Heating Efficiency for Heat Pumps

Equipment Type	Appliance Efficiency Regulations Reference	Configuration / Size	Minimum Heating Efficiency
Room heat pumps	Table B-2	Any	Cooling standard only
Packaged terminal heat pumps	Table B-3	Any	1.3 +[0.00016 x Cap)] COP
Single phase air source heat pumps (NAECA)	Table C-2	< 65,000 Btu/h Cooling Capacity	Packaged 7.7 HSPF[1] Split 7.7 HSPF [1]
		Through-the-wall < 65,000 Btu/h Cooling Capacity	See Appliance Efficiency Regulations
		Small duct high velocity < 65,000 Btu/h Cooling Capacity	See Appliance Efficiency Regulations
Three-phase air source heat pumps	Table C-3	< 65,000 Btu/h	See Appliance Efficiency Regulations
Water-source heat pumps	Table C-5	< 135,000 Btu/h	4.2 COP
		≥ 135,000 Btu/h, < 240,000 Btu/h	2.9 COP
1. HSPF values in parentheses indicate minimum efficiency effective January 23, 2006.			

Source: California Appliance Efficiency Regulations

Heat Pump Controls

§112(b), Exception to §112(c)

Any heat pump with supplementary electric resistance heating must have controls that have two capabilities to limit the electric resistance heating. The first is to set the cut-on and cut-off temperatures for compression and supplementary heating at different levels. For example, if the heat pump begins heating when the inside temperature reaches 68°F, the electric resistance heating is set to come on if the temperature gets below 65°F; and there is an opposite off mode such that if the heat pump shuts off when the temperature reaches 72°F, the back-up heating shuts off at 68°F.

The second control capability prevents the supplementary electric resistance heater from operating when the heat pump alone can meet the heating load, except during defrost. There is a limited exception to this second function for “smart thermostats” that provide the following: intelligent recovery, staging, ramping, or another control mechanism that prevents the unnecessary operation of supplementary electric resistance heating when the heat pump alone can meet the heating load.

To meet the thermostat requirements, a thermostat for a heat pump must be a “smart thermostat” that minimizes the use of supplementary heating during startup and recovery from setbacks.

Note: Room air conditioner heat pumps are not required to comply with the thermostat requirements.

Equipment Sizing

§150(h)

The Standards do not set limits on the sizing of heating equipment, but they do require that heating loads be calculated for new heating systems. Oversized equipment typically operates less efficiently and can create comfort problems due to excessive cycling and high airflow.

Acceptable load calculation procedures include methods described in the ASHRAE Handbook – Equipment, ASHRAE Handbook – Applications, ASHRAE Handbook – Fundamentals, SMACNA Residential Comfort System Installation Manual, or ACCA Manual J.

The Standards require that the outdoor design conditions for load calculations be selected from Reference Joint Appendix JA2, and that the indoor design temperature for heating load calculations be 70°F. The outdoor design temperature must be no lower than the heating winter median of extremes as listed in the Reference Joint Appendix JA2. If the actual city location for a project is not included in the Reference Joint Appendix JA2, or if the data given for a particular city does not match the conditions at the actual site as well as that given for another nearby city, consult the local building department for guidance.

The load calculations must be submitted with compliance documentation when requested by the building department. The load calculations may be prepared by 1) the documentation author and submitted to the mechanical contractor, 2) a mechanical engineer, or 3) the mechanical contractor who is installing the equipment.

Standby Losses and Pilot Lights

§115

Fan-type central furnaces may not have a continuously burning pilot light. This requirement does not apply to wall furnaces, floor furnaces or any gravity type furnace. Household cooking appliances also must not have a continuously burning pilot light except for those without an electrical supply voltage connection and in which each pilot consumes less than 150 Btu/hr.

§112(d)

Larger gas-fired and oil-fired forced air furnaces with input ratings ≥ 225,000 Btu/h (which is bigger than a typical residential furnace) must also have an intermittent ignition or interrupted device (IID), and either power venting or a flue damper. A vent damper is an acceptable alternative to a flue damper for furnaces where combustion air is drawn from the conditioned space. All furnaces with input ratings ≥ 225,000 Btu/h, including electric furnaces, that are not located within the conditioned space must have jacket losses not exceeding 0.75 percent of the input rating.

4.2.2 Prescriptive Requirements

§151(f)6 Heating System Type

Prescriptive Packages D and E require that a gas heating system or a heat pump be installed. The minimum energy efficiency of the heating equipment is specified by the mandatory measures (see above).

Package C allows electric resistance and electric radiant heating, but insulation and other measures are more stringent.

Under the performance compliance method, a small credit is available for electric radiant panel heating systems relative to electric baseboard systems.

4.2.3 Compliance Options

With the performance compliance method, credit can be taken for selecting high efficiency heating equipment, such as a high efficiency furnace or heat pump. With a furnace, for example, the minimum requirement is an AFUE of 78 percent, but units are available with AFUE of 90 percent or better.

4.3 Cooling Equipment

This section addresses the requirements for primary cooling equipment.

4.3.1 Mandatory Measures

Equipment Efficiency

§111 and §112(a)

Appliance Efficiency Regulations

The efficiency of most cooling equipment is regulated by NAECA (the federal appliance standard) and the California Appliance Efficiency Regulations. These regulations are not contained in the Building Energy Efficiency Standards but rather in separate documents. These regulations are referenced in §111. The Appliance Efficiency Regulations include definitions for all types of equipment. The energy efficiency of larger equipment is regulated by §112(a). See the Nonresidential Compliance Manual for information on larger equipment.

Central, Single Phase Air Conditioners and Air Source Heat Pumps (under 65,000 Btu/h)

The central, single phase air conditioners and air source heat pumps that are most commonly installed in residences have a smaller capacity than 65,000 Btu/h. The Appliance Efficiency Regulations for this equipment require minimum Seasonal Energy Efficiency Ratios (SEER).

The Seasonal Energy Efficiency Ratio of all new central, single phase air conditioners and air source heat pumps with output less than 65,000 Btu/h shall be certified not to be less than the values listed below.

Table 4-4 – Minimum Cooling Efficiencies for Central Air Conditioners and Heat Pumps

Appliance	Type	SEER
Central Air Conditioners	Split System	13.0
	Single Package	13.0
Central Air Source Heat Pumps	Split System	13.0
	Single Package	13.0

Source: California Appliance Efficiency Regulations Table C-2

Other Air Conditioners and Heat Pumps

Appliance Efficiency Regulations

The current Appliance Efficiency Regulations for larger central air conditioners and heat pumps, and for all room air conditioners and room air conditioner heat pumps shall be certified by the manufacturer to not to be less than the values listed in Table 4-5 and Table 4-6.

Table 4-5 – Minimum Cooling Efficiency for Larger Central Air Conditioners and Heat Pumps

Equipment Type	Size Category	EER
Central Air Conditioners	≥ 65,000 Btu/h but <135,000 Btu/h	8.9
Central Air Source Heat Pumps	≥ 65,000 Btu/h but <135,000 Btu/h	8.9
Central Water Source Heat Pumps	< 17,000 Btu/h	11.2
Central Water Source Heat Pumps	≥ 17,000 Btu/h and < 135,000 Btu/h	12.0

Source: California Appliance Efficiency Regulations Table C-3, C-5

Table 4-6 – Minimum Cooling Efficiency for Non-Central Space Cooling Equipment

Including Room Air Conditioners; and Room Air Conditioner Heat Pumps; Package Terminal Air Conditioners (PTAC); and Package Terminal Heat Pumps (PTHP)

Equipment Type	Size Category (Input)	Minimum Efficiency
Room Air Conditioners, with Louvered Sides	< 6,000 Btu/h	9.7 EER
	≥ 6,000 Btu/h and < 8,000 Btu/h	9.7 EER
	≥ 8,000 Btu/h and < 14,000 Btu/h	9.8EER
	≥ 14,000 Btu/h and < 20,000 Btu/h	9.7 EER
	≥ 20,000 Btu/h	8.5 EER
Room Air Conditioners, without Louvered Sides	< 6,000 Btu/h	9.0 EER
	≥ 6,000 Btu/h and < 8,000 Btu/h	9.0 EER
	≥ 8,000 and <20,000 Btu/h	8.5 EER
	≥ 20,000 Btu/h	8.5 EER
Room Air Conditioner Heat Pumps with Louvered Sides	< 20,000 Btu/h	9.0 EER
	≥ 20,000 Btu/h	8.5 EER
Room Air Conditioner Heat Pumps without Louvered Sides	< 14,000 Btu/h	8.5EER
	≥ 14,000 Btu/h	8.0 EER
Casement-Only Room Air Conditioner	All Capacities	8.7 EER
Casement-Slider Room Air Conditioner	All Capacities	9.5 EER
PTAC and PTHP	≤ 7,000 Btu/h	8.88 EER
	> 7,000 and < 15,000 Btu/h	10.0 – (0.00016 x Cap) EER
	≥ 15,000 Btu/h	7.6 EER

Source: California Appliance Efficiency Regulations TablesB-2 and B-3

Insulation for Refrigerant Lines in Split System Air Conditioners

§150(j)2
§150(m)9

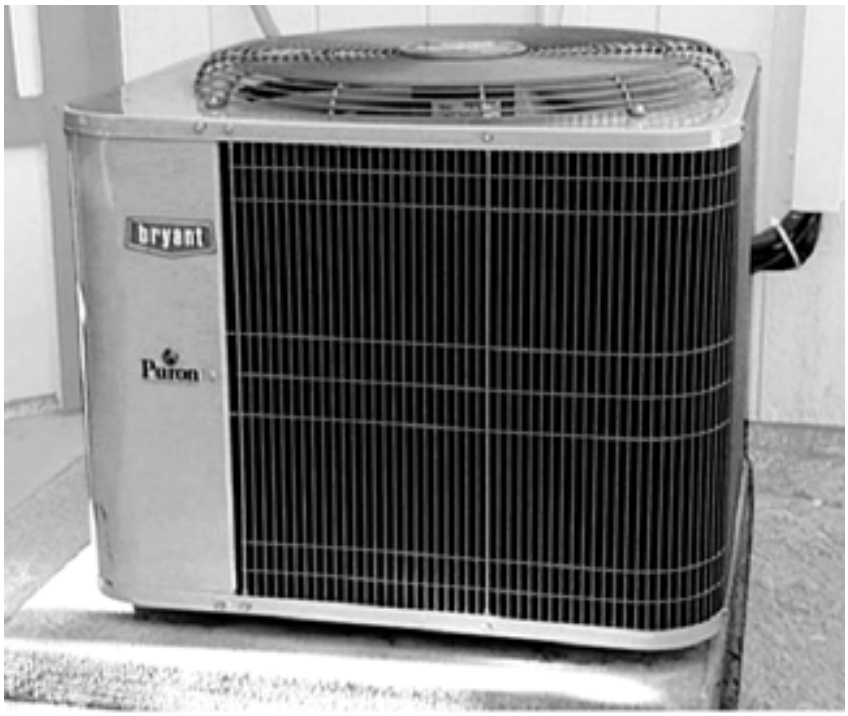

Source: California Energy Commission

Figure 4-1 – Outdoor Compressor/Condenser Unit

Two refrigerant lines connect the indoor and outdoor units of split system air conditioners and heat pumps: the liquid line (the smaller line) and the suction line (the larger line). The liquid line is at an elevated temperature, and heat escaping from it is helpful; therefore, it should not be insulated. However, the suction line carries refrigerant vapor that is cooler than ambient in the summer and (with heat pumps) warmer than ambient in the winter. This line, when less than or equal to 2 inches, (50 mm) in diameter must be insulated with at least 0.75 inches (19 mm) of insulation per the requirements of §150(j)2. When cooling systems contain suction lines greater than 2 inches in diameter, §150(j)2 requires a minimum insulation level of 1 inch (25 mm).

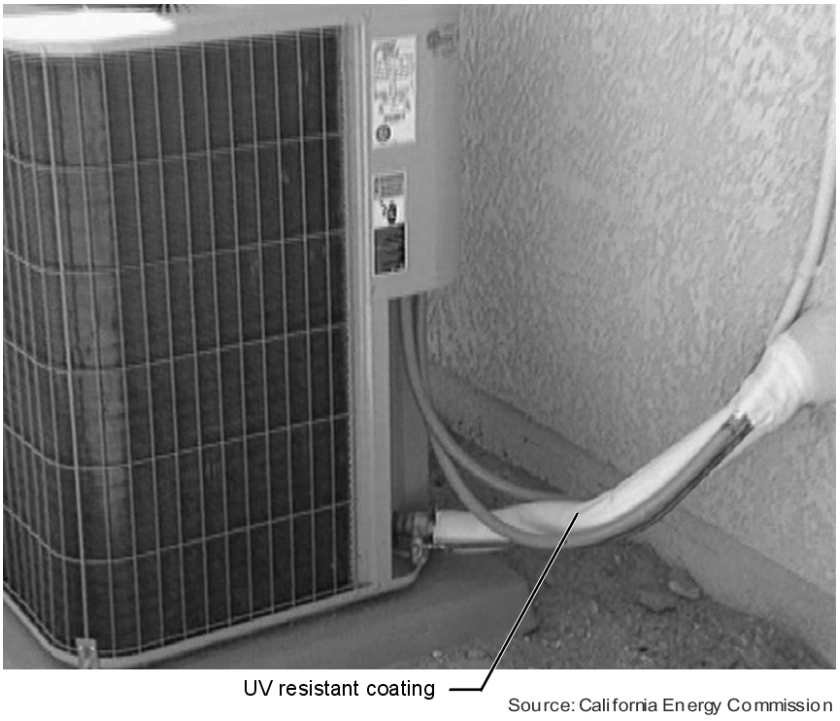

Figure 4-2 – Refrigerant Line Insulation

Insulation used with the suction line must be protected from physical damage or from UV deterioration. Pipe insulation in outdoor locations is typically protected by an aluminum or sheet metal jacket, painted canvas, plastic cover, or coating that is water retardant and UV resistant. See §150(m)9, and Figure 4-2.

Equipment Sizing

§150(h), §151(b)

Just as for heating equipment, the Standards do not set limits on the size of cooling equipment, but they do require that cooling loads be calculated for new cooling systems. Avoiding oversizing is especially important for cooling equipment because efficiency degrades when the system cycles on and off frequently.

The Standards offer a compliance credit when the installed air conditioning equipment is sized in accordance with the Reference Residential Appendix RA1 Maximum Rated Cooling Capacity for compliance credit sizing calculations. A HERS rater field verification is required to confirm that the installed equipment conforms to the sizing criteria as reported on the CF-1R.

The outdoor design conditions for load calculations must be selected from Reference Joint Appendix JA2, Table 2-3, using values no greater than the 1.0 percent Cooling Dry Bulb and Mean Coincident Wet Bulb values listed. The indoor design temperature for cooling load calculations must be 75°F.

Cooling load calculations must be submitted with compliance documentation when requested by the building department. The load calculations may be prepared by:

1) The documentation author and submitted to the mechanical contractor, or

2) A mechanical engineer, or

3) The mechanical contractor who is installing the equipment.

4.3.2 Prescriptive Requirements

§151(f)7

The prescriptive packages C, D, and E, for split system equipment in climate zones 2 and 8 through 15, require refrigerant charge measurement (RCM) and the installation of temperature measurement access holes (TMAH), and saturation temperature measurement sensors (STMS). The RCM must be HERS verified. TMAH and STMS make non-intrusive methods for HERS verification of RCM possible. The alternative to the RCM, TMAH, and STMS is the installation of a refrigerant charge indicator display (§151(f)7Aii).

Refrigerant Charge Measurement (RCM)

The prescriptive standards require that a HERS rater verify that split system air conditioners and heat pumps have the correct refrigerant charge. The RCM procedures that HERS raters are required to follow are documented in the Reference Residential Appendix RA3.2. Packaged units are not required to have refrigerant charge measurement.

The measurement and regulation of correct refrigerant charge can significantly improve the performance of air conditioning equipment. Refrigerants are the working fluids in air conditioning and heat pump systems that absorb heat energy from one area (the evaporator) and transfer it to another (the condenser).

Refrigerant charge refers to the actual amount of refrigerant present in the system. Excessive refrigerant charge (overcharge) reduces system efficiency and can lead to premature compressor failure. Insufficient refrigerant charge (undercharge) also reduces system efficiency and can cause compressors to overheat.

Temperature Measurement Access Holes (TMAH)

TMAH provide a non-intrusive means for refrigerant charge verification by HERS raters and other third party inspectors, since they eliminate the need for the raters/inspectors to drill holes into the installed air conditioning equipment enclosures for placement of the temperature sensors that are required by the refrigerant charge verification test procedures described in the Reference Residential Appendix RA3.2.

Installation of TMAH must be performed by the installer of the air conditioner or heat pump equipment according to the specifications given in Reference Residential Appendix RA3.2.

The TMAH feature consists of two 5/16 inch (8 mm) holes in the plenum, one upstream from the evaporator coil and one downstream from it (see diagram in Reference Residential Appendix RA3.2).

Saturation Temperature Measurement Sensors (STMS)

The STMS provide a non-intrusive means for refrigerant charge verification by HERS raters and other third party inspectors, since they eliminate the need for a rater/inspector to open the system's refrigerant service access ports to install refrigerant pressure gauges on the suction and discharge lines. The test procedures that utilize these STMS are described in the Reference Residential Appendix RA3.2.

The STMS feature consists of two permanently installed temperature sensors, one mounted on the evaporator coil and one mounted on the condenser coil. The sensors are required to be factory installed, or field installed according to manufacturer's specifications, or otherwise installed in accordance with an alternative installation/instrumentation specification that must be approved by the Executive Director. These STMS must be equipped with industry standard mini plugs that allow the system installers and HERS raters to use the sensors to measure the coil saturation temperature by attaching the temperature sensor mini plugs to a digital thermometer instrument.

To adjust or check the refrigerant charge on an air conditioning system using the standard charge measurement procedures in Reference Residential Appendix RA3.2, it is necessary to determine the instantaneous "saturation temperature" in the evaporator coil and in the condenser coil. A refrigeration technician typically determines this temperature by measuring the coil pressure and using a saturation temperature chart to look up the saturation temperature at that pressure.

Another way to determine the saturation temperature in the coil is to measure the temperature of the refrigerant tubing in the saturation temperature region of one of the tubing circuits in the coil. The saturation temperature measurement is made utilizing a temperature sensor that has been permanently installed for this purpose by the equipment manufacturer or the air conditioning contractor.

For a coil in a typical system operating at steady state, approximately 75 percent of the length of any tubing circuit in the coil will be at a constant saturation temperature and pressure (the refrigerant is undergoing a phase change). To determine the location of the saturation temperature region of the circuit, trace the path of the refrigerant tubing circuit from the inlet of the tubing circuit, to the outlet of the tubing circuit.

In the condenser coil, generally the first 10 to 20 percent of each tubing circuit contains superheated vapor; the center 60 to 80 percent of the tubing circuit contains refrigerant undergoing a phase change (condensing the vapor into a liquid at a constant temperature); and the last 10 to 20 percent of the tubing circuit contains sub-cooled liquid. Figure 4-3 shows a condenser coil with multiple tubing circuits, and a Type K thermocouple attached to the saturation temperature region of one of the tubing circuits.

In the evaporator coil, the first 60 percent or more of the circuit contains refrigerant changing from liquid to vapor at the saturation temperature, and the last portion of the circuit contains superheated vapor. Figure 4-4 shows an evaporator coil with a simple tubing circuit.

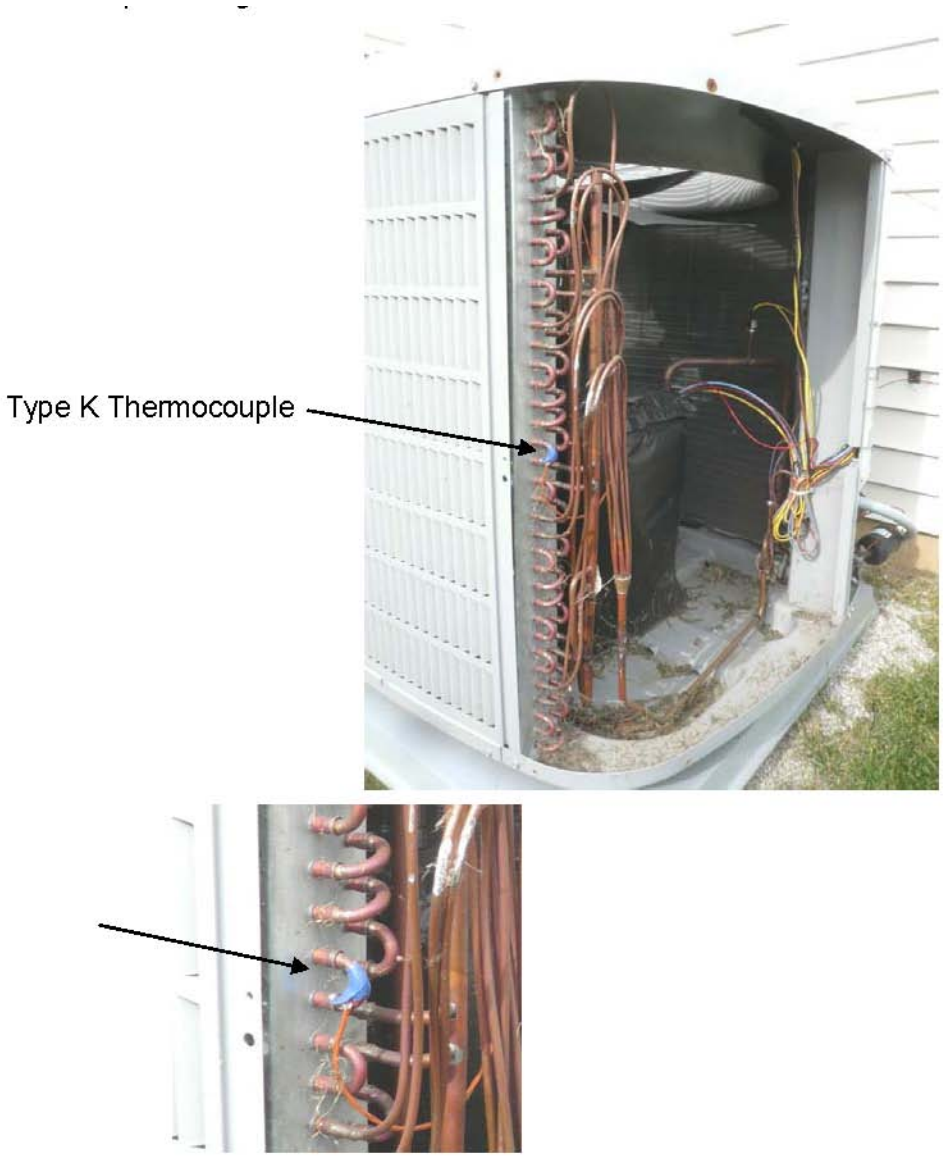

Figure 4-3 – Condenser Coil with STMS attached

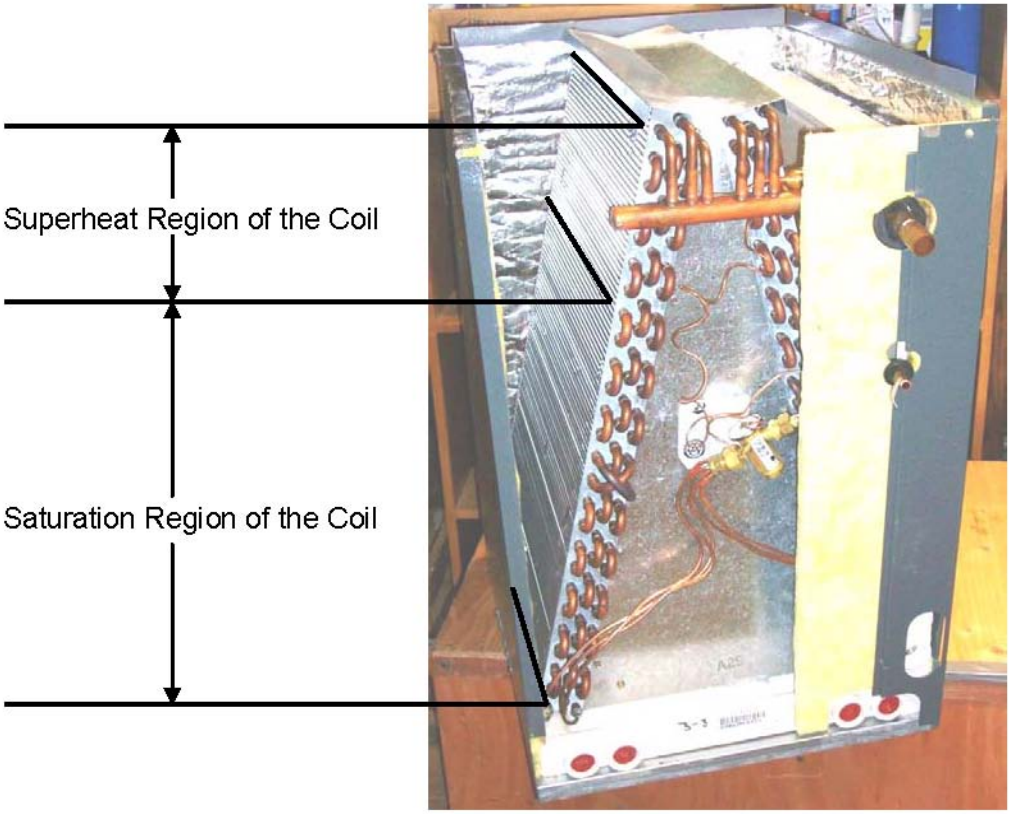

Figure 4-4 – Evaporator Coil

Thermocouples shall be type K with the sensing tip permanently attached to the refrigerant piping and insulated with cork tape at the location specified by the equipment manufacturer. An industry standard plug shall be lead to the outside of the equipment where it will be accessible to technicians or HERS raters without any disassembly of the equipment.

If the manufacturer's thermocouple installation instructions are not available, the system designer shall include specifications on the system's design drawings for the installed location of the thermocouples. The air conditioning contractor shall install the thermocouple in good contact with the tube bend at the specified location and insulate it from the surrounding air to provide a direct measurement of the coil “saturation temperature”.

Charge Indicator Display

The installation of a charge indicator display (CID), if verified by a HERS rater, may be used as an alternative to the prescriptive requirement for HERS diagnostic testing of the refrigerant charge in split system air conditioners and heat pumps. The purpose of the CID is to provide real-time information to the building occupant about the status of the system refrigerant charge, metering device, and cooling coil airflow. The CID will monitor and determine the operating performance of split system air conditioners and heat pumps, and provide visual indication to the system owner or operator if the system’s refrigerant charge,

airflow, or metering device performance does not conform to approved target parameters for minimally efficient operation. Thus, if the CID signals the owner/occupant that the system requires service or repair, the occupant can immediately call for a service technician to make the necessary adjustments or repairs. A CID can provide significant benefit to the owner/occupant by alerting the owner/occupant to the presence of inefficient operation that could result in excessive energy use/costs over extended periods of time. A CID can also indicate system performance faults that could result in system component damage or failure if not corrected, thus helping the owner/occupant to avoid unnecessary repair costs.

Charge indicator display technologies shall be factory installed or field installed according to manufacturer's specifications. Reference Joint Appendix JA6 contains more information about CID technologies.

The presence of a CID on a system must be field verified by a HERS rater. See Reference Residential Appendix RA3.4.2 for the HERS verification procedure, which consists of a visual verification of the presence of the installed CID technology. The rater must inspect to see that the visual indication display component of the installed CID technology is mounted adjacent to the split system's thermostat. The rater must also observe that the system reports no system faults when the system is operated continuously for at least 15 minutes when the indoor air temperature returning to the air conditioner is above 65°F.

Cooling Coil Airflow; Fan Watt Draw; and Hole for the Placement of a Static Pressure Probe (HSPP) or Permanently Installed Static Pressure Probe (PSPP)

Prescriptively in climate zones 10 through 15 the central forced air system fans must maintain airflow greater than 350 CFM per nominal ton of cooling capacity across the cooling coil and have a fan watt draw less than 0.58 Watts/CFM. This measure is applicable under prescriptive packages C, D, and E. This measure requires builders to improve air handler fans and air conditioner efficiency by improving their duct systems and possibly by installing higher efficiency air handlers.

Reducing the watt draw of central forced air systems provides significant peak demand savings because they are generally running continuously on the hottest days when the electricity system peaks occur. Adequate airflow also provides peak demand savings because it increases the sensible Energy Efficiency Ratio (EER) of air conditioning systems, particularly at the high outdoor dry bulb temperatures on peak demand days. Adequate airflow and low watt draw save electricity throughout the cooling season, and low fan watt draw saves electricity in the heating season as well.

When cooling coil airflow and fan watt draw is required prescriptively, there must be a hole, provided in the supply plenum by the installing contractor, for the placement of a static pressure probe (HSPP) or a permanently installed static pressure probe (PSPP) must be installed. The HSPP or PSPP must be installed in the required location, in accordance with the specifications detailed in Reference Residential Appendix RA3.3. The HSPP or PSPP is required in order to facilitate cooling coil airflow measurement when using devices/procedures that depend on supply plenum pressure measurements. The HSPP or PSPP allows HERS raters to perform the required diagnostic airflow testing in a non-intrusive

manner, by eliminating the necessity for the rater to drill holes in the supply plenum for placement of pressure measurement probes.

There are three acceptable methods allowed for use in determining compliance with the cooling coil airflow requirement as described in Reference Residential Appendix RA3.3:

- use of a flow capture hood to measure the total airflow through the return grill(s), or
- a flow grid device at the return grill(s) or other location where all the central fan airflow passes through the flow grid, or
- using a fan flow meter device to perform the plenum pressure matching procedure.

The flow grid measurement device, and the fan flow meter measurement device both require access to static pressure measurements of the airflow exiting the cooling coil, which utilizes the HSPP or PSPP mentioned above.

Heating-only space-conditioning systems are not required to meet the prescriptive cooling coil airflow and fan watt draw requirements.

The airflow measurement procedures described in Reference Residential Appendix RA3.3 are also allowed to be used for determining compliance with the minimum airflow requirement for the refrigerant charge verification protocol - as an alternative to using the temperature split method that is described in the Reference Residential Appendix RA3.2. However, the temperature split method is not allowed to be used to determine compliance with the cooling coil airflow requirements.

4.3.3 Compliance Options

There are several options for receiving compliance credit related to the cooling system. These credits are available through the performance compliance method.

High Efficiency Air Conditioner

Air conditioner efficiencies are determined according to federal test procedures. The efficiencies are reported in terms of Seasonal Energy Efficiency Rating (SEER) and Energy Efficiency Rating (EER). Savings can be achieved by choosing an air conditioner that exceeds the minimum efficiency requirements.

The EER is the full load efficiency at specific operating conditions. It is possible that two units with the same SEER can have different EERs. In cooling climate zones of California, for two units with a given SEER, the unit with the higher EER is more effective in saving energy. Using the performance compliance method, credit is available for specifying an air conditioner with an EER greater than 10 (see the compliance program vendor's compliance supplement). When credit is taken for a high EER, field verification by a HERS rater is required (see Reference Residential Appendix RA3.4).

Air Handler Watt Draw

All the prescriptive packages require central forced air systems to install a fan that draws less than 0.58 watts/CFM. Performance compliance credit is available for demonstrating the installation of a high efficiency fan and duct system with a lower wattage fan than the prescriptive requirement. This credit can be achieved by selecting a unit with a high efficiency air handler fan and/or careful attention to efficient duct design. The performance compliance method allows the user's proposed fan power to be entered into the program, and credit will be earned if it is lower than the default of 0.58 watts per CFM of cooling coil airflow. To obtain this credit, the cooling coil airflow must meet the prescriptive requirements of at least 350 CFM/ton of nominal cooling capacity. After installation, the contractor must test the actual fan power of each system using the procedure in Reference Residential Appendix RA3.3, and show that it is equal or less than what was proposed in the compliance software analysis. For meet prescriptive compliance the cooling coil airflow criteria shall be 350 CFM/ton of nominal cooling capacity or greater. See §151(f)7B. The watt draw and airflow must also be verified by a HERS rater.

Cooling Coil Airflow

Adequate cooling coil airflow rates must be attained in order to deliver an air conditioner's maximum rated sensible capacity, total capacity, and efficiency. Low airflow rates can lead to ice buildup on the cooling coil and to compressor failure. §151(f)7Bi requires a prescriptive airflow rate of at least 350 CFM/ton of nominal cooling capacity. The performance approach offers a compliance credit for systems that can demonstrate a cooling coil airflow that exceeds 350 CFM/ton of nominal cooling capacity. The air handler must meet the prescriptive requirement for fan Watt draw of less than 0.58 w/CFM. The airflow for each system that must demonstrate compliance must be tested using one of the methods described in Reference Residential Appendix RA3.3. This compliance requires verification by a HERS rater.

Maximum Rated Total Cooling Capacity (MRTCC)

Compliance credit is available for cooling systems that have rated total cooling capacities that are less than the maximum rated total cooling capacity (MRTCC) criteria calculated by the Compliance Software for the proposed design as shown on the CF-1R. The installed equipment must be verified by a HERS rater to confirm compliance with the MRTCC criteria shown on the CF-1R. This compliance credit is available only in combination with the credits for duct sealing, and prescriptive cooling coil airflow.

The Electrical Input Exception for the MRTCC credit described in Reference Residential Appendix RA1.4 may be used to achieve the same compliance credit allowed for MRTCC. This exception allows compliance credit for equipment with rated total cooling capacity that exceeds the MRTCC criteria if the selected equipment does not use more power than the minimally compliant MRTCC equipment. Selection of EER values above the default 10 EER are used to attain compliance with this exception. An EER verification and MRTCC verification of the installation by a HERS rater is required if this electrical input exception is

claimed. Cooling coil airflow and duct sealing verification by a HERS rater is required.

The procedure for field verification of high EER equipment is described in Reference Residential Appendix RA3.4.4. The procedure consists of visual verification of installed equipment and confirmation that the installed equipment matches the equipment required to achieve the high EER rating based on the AHRI rating for the equipment. The procedures for duct leakage measurements are specified in Reference Residential Appendix RA3.1. The procedures for cooling coil airflow verification are specified in Reference Residential Appendix RA3.3.

4.4 Air Distribution Ducts and Plenums

Air distribution system performance can have a big impact on overall HVAC system efficiency. Therefore, air distribution systems face a number of mandatory measures and prescriptive requirements. The prescriptive requirements say that air distribution ducts must be sealed and tested in all climate zones. There are also a number of compliance credits available related to duct system design.

Duct efficiency is affected by the following parameters:

- Duct location (attic, crawlspace, basement, inside conditioned space, or other)
- Specific conditions in the unconditioned space, e.g., presence of a radiant barrier
- Duct insulation characteristics
- Duct surface area, and
- Air leakage of the duct system

In performance calculations, duct efficiency can be calculated in one of two ways:

- default input assumptions; or
- diagnostic measurement values.

The computer program will use default assumptions for the proposed design when the user does not intend to make improvements in duct efficiency. There is a compliance penalty if the ducts are not sealed and tested.

4.4.1 Mandatory Measures

Minimum Insulation

§150(m)1

In all cases, unless ducts are enclosed entirely in conditioned space, the minimum allowed duct insulation value is R-4.2. Note that higher values may be required by the prescriptive requirements as described below.

§150(m)5

For the purpose of determining installed R-value of duct wrap, the installed thickness of insulation must be assumed to be 75 percent of the nominal thickness due to compression.

Connections and Closures

§150(m)1, §150(m)2, §150(m)3

The Standards set a number of mandatory measures related to duct connections and closures. These measures address both the materials used for duct sealing and the methods that may be used. Refer to the sections of the Standards listed above for details.

Connections between metal ducts and the inner core of flexible ducts must be mechanically fastened.

Factory-fabricated Duct Systems

Factory fabricated duct systems must comply with the following requirements:

1. All factory-fabricated duct systems must comply with UL 181 for ducts and closure systems, including collars, connections, and splices, and be labeled as complying with UL 181. UL181 testing may be performed by UL laboratories or a laboratory approved by the Executive Director.
2. All pressure-sensitive tapes, heat-activated tapes, and mastics used in the manufacture of rigid fiberglass ducts must comply with UL 181 and UL 181A.
3. All pressure-sensitive tapes and mastics used with flexible ducts must comply with UL 181 and UL 181B.
4. Joints and seams of duct systems and their components cannot be sealed with cloth back rubber adhesive duct tapes unless such tape is used in combination with mastic and draw bands: or
5. It has on its backing the phrase "CEC approved," a drawing of a fitting to plenum joint in a red circle with a slash through it (the international symbol of prohibition), and a statement that it cannot be used to seal fitting to plenum and junction box joints.

Field-fabricated Duct Systems

Field –fabricated duct systems must comply with the following requirements:

1. Factory-made rigid fiberglass and flexible ducts for field-fabricated duct systems must comply with UL 181.All pressure-sensitive tapes, mastics, aerosol sealants, or other closure systems used for installing field-fabricated duct systems shall meet the applicable requirements of UL 181, UL 181A, and UL 181B.
2. Mastic sealants and mesh.

3. Sealants must comply with the applicable requirements of UL 181, UL 181A, and/or UL 181B, and be nontoxic and water resistant.
4. Sealants for interior applications must be tested in accordance with ASTM C731 and D2202.
5. Sealants for exterior applications must be tested in accordance with ASTM C731, C732, and D 2202.
6. Sealants and meshes must be rated for exterior use.
7. Pressure-sensitive tape. Pressure-sensitive tapes must comply with the applicable requirements of UL 181, UL 181A, and UL 181B.
8. Joints and seams of duct systems and their components must not be sealed with cloth back rubber adhesive duct tapes unless such tape is used in combination with mastic and draw bands: **or**
9. It has on its backing the phrase "CEC approved," a drawing of a fitting to plenum joint in a red circle with a slash through it (the international symbol of prohibition), and a statement that it cannot be used to seal fitting to plenum and junction box joints.

Draw Bands Used With Flexible Duct

1. Draw bands must be either stainless-steel worm-drive hose clamps or UV-resistant nylon duct ties.
2. Draw bands must have a minimum tensile strength rating of 150 pounds.
3. Draw bands must be tightened as recommended by the manufacturer with an adjustable tensioning tool.

Aerosol-sealant Closures

1. Aerosol sealants shall meet the requirements of UL 723 and be applied according to manufacturer specifications.
2. Tapes or mastics used in combination with aerosol sealing shall meet the requirements of this Section.

If mastic or tape is used to seal openings greater than 1/4 inch, the combination of mastic and either mesh or tape must be used.

Building spaces such as cavities between walls, support platforms for air handlers, and plenums defined or constructed with materials other than sealed sheet metal, duct board, or flexible duct must not be used for conveying conditioned air including return air and supply air. The practice of using drywall materials as the interior surface of a return plenum is not allowed. Building cavities and support platforms may contain ducts. Ducts installed in cavities and support platforms must not be compressed to cause reductions in the cross sectional area of the ducts. Although a HERS rater may examine this as a part of his or her responsibilities when involved in a project, the enforcement of these minimum standards for ducts is the responsibility of the building official.

Example 4-1

Question

I am installing a fan coil in the hallway of a multifamily dwelling unit in a space constructed of sheetrock. The sheetrocked space is formed by the original hallway ceiling at the top, the hallway sidewalls, and sheetrock across the bottom of the space with a return grill mounted in the bottom sheetrock. Does a duct have to be installed connecting the fan coil return to the return register?

Answer

This type of installation may be used only when a fan-coil unit is installed in a sheetrocked space that is constructed and sealed to meet all applicable requirements in the California Building Code (CBC) Title 24, Part 2, Volume 1, Chapter 7 for fire-resistance-rated construction.

Also, §150(m) states as follows:

"Building cavities, support platforms for air handlers, and plenums defined or constructed with materials other than sealed sheet metal, duct board or flexible duct shall not be used for conveying conditioned air."

There are two acceptable methods of complying with §150(m) for the fan coil space that is the subject of the question.

1. A return duct is installed between the fan coil and the return register.

2. If the builder demonstrates that the sheetrocked space in which the fan coil is installed is not a plenum, the duct in method "1" is not required.

The California Mechanical Code has the following definition of a plenum:

"PLENUM is an air compartment or chamber including uninhabited crawl spaces, areas above ceilings or below a floor, including air spaces below raised floors of computer/data processing centers, or attic spaces, to which one or more ducts are connected and which forms part of either the supply air, return air or exhaust air system, other than the occupied space being conditioned."

To demonstrate the sheetrocked space in which the fan coil is installed is not a plenum, the builder must demonstrate that it is part of the conditioned space. This fan coil space can be considered part of the conditioned space if it is demonstrated that the space

1. is within the building envelope, and

2. air leakage pathways (e.g., infiltration connections to building cavities) are sealed such that the space is more connected to the inside of the envelope than to outside the envelope.

There are two ways of demonstrating that air leakage pathways are properly sealed.

1. The easiest way is to construct the fan coil space so that an inspector is able to visually determine that the space has no leakage paths. No testing is required for this approach. The inspector must be able to inspect all joints and seams in the sheetrock, particularly horizontal seams that are above and below the sheetrocked bottom of the space, and to verify that no horizontal seams are behind the sheetrocked bottom or the mounting supports for the sheetrocked bottom of the space. The supports for the sheetrocked bottom must be mounted on the surface of the walls of the space and have sheetrock between the support and the wall framing.

Any horizontal seam in the wall-mounted sheetrock must be a minimum of ½ inch below the lower surface of the sheetrocked bottom. Also any horizontal seam in the wall of the space above the sheetrocked bottom must be a minimum of 1½ inches above the top of the mounting wood or metal brackets. This spacing is required to allow adequate room for taping the seam. All vertical sheetrock seams must be taped and sealed with joint compound or equivalent prior to the installation of the wood or metal brackets that support the dropped ceiling.

All penetrations of this space, for example refrigerant lines, water lines for hydronic heating, electrical (line and low voltage) lines, sprinkler lines, and ducts must be sealed with fire caulk or other approved sealing material as required by the building official.

Ductwork that penetrates the sheetrock must use a collar that goes entirely through the wall cavity. These collars must extend at least two inches past the sheetrock on each side of the wall cavity. The collars must then be sealed to the sheetrock on each side of the wall. The ducts must be attached and sealed to the collar.

2. The other way to demonstrate there is no air leakage pathway that is more connected to the outside than to the inside is to test the leakage of the sheetrocked space as though it were a duct. For this test, the space is sealed off and tested with duct pressurization equipment at a pressure of 25 Pa. If the tested leakage from this space is 10 cfm or less, then the space may be considered to have no substantial leakage to outside the conditioned space (effectively zero within the instrumentation accuracy). The results of this test must be reported to the building official. See the following three figures.

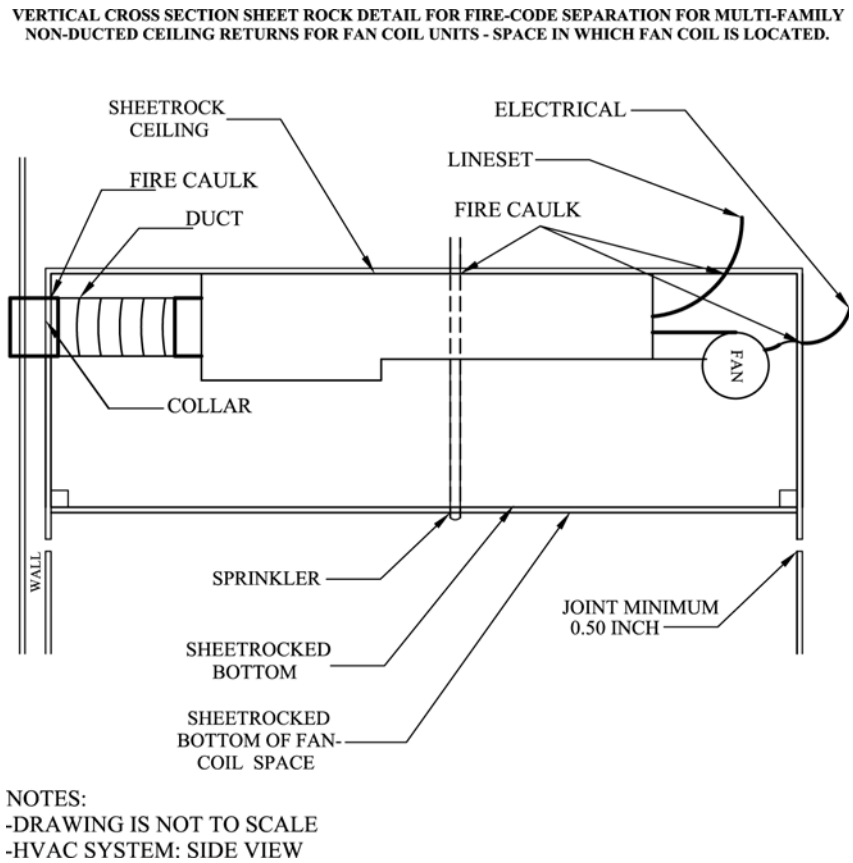

Figure 4-5 – Example of non-ducted ceiling returns for fan coil to meet fire code

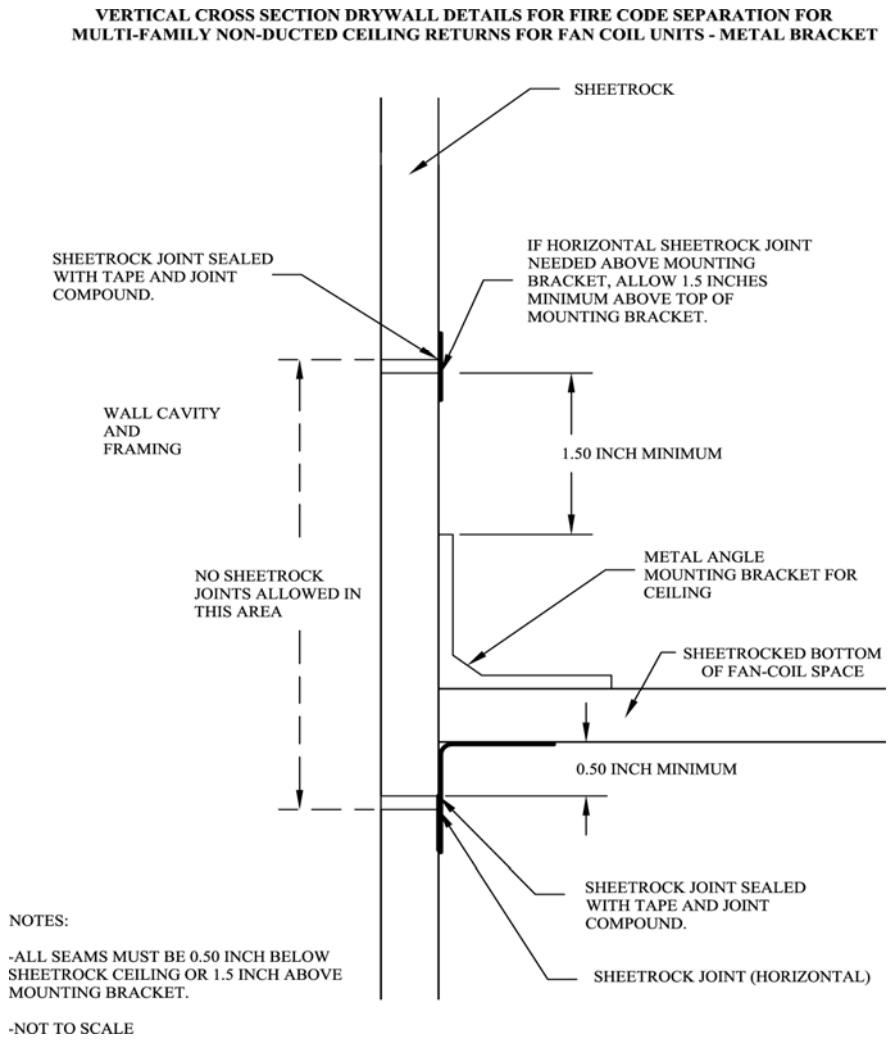

Figure 4-6 – Example of metal bracket support to meet fire code separation

§150(m)1 Exception to §150(m)1

Ducts and fans integral to a wood heater or fireplace are exempt from these insulation and installation requirements.

§150(m)2D, §150(m)3D

Duct systems may not use cloth-back, rubber-adhesive duct tape unless it is installed in combination with mastic and draw bands. The enforcement of these minimum standards is the responsibility of the building official.

Product Markings

§150(m)2A, §150(m)6

All factory-fabricated duct systems must meet UL 181 for ducts and closure systems and be labeled as complying with UL 181. Collars, connections and

splices are considered to be factory-fabricated duct systems and must meet the same requirement.

Insulated flexible duct products installed to meet this requirement must include labels, in maximum intervals of 3 ft, showing the R-value for the duct insulation (excluding air films, vapor barriers, or other duct components), based on the tests and thickness specified in §150(m).

Dampers to Prevent Air Leakage

§150(m)7

Fan systems that exhaust air from the building to the outside must be provided with back draft or automatic dampers.

§150(m)8

Gravity ventilating systems must have an automatic or readily accessible, manually operated damper in all openings to the outside, except combustion inlet and outlet air openings and elevator shaft vents. This includes clothes dryer exhaust vents when installed in conditioned space.

Protection of Insulation

§150(m)9

Insulation must be protected from damage, including that due to sunlight, moisture, equipment maintenance, and wind but not limited to the following: Insulation exposed to weather must be suitable for outdoor service; for example, protected by aluminum, sheet metal, painted canvas, or plastic cover. Cellular foam insulation shall be protected as above or painted with a coating that is water retardant and provides shielding from solar radiation that can cause degradation of the material.

Ducts in Concrete Slab

Ducts located in a concrete slab must have R-4.2 insulation, but other issues will come into play. If ducts are located in the soil beneath the slab or embedded in the slab, the insulation material should be designed and rated for such installation. Insulation installed in below-grade applications should resist moisture penetration (closed cell foam is one moisture-resistant product). Common pre-manufactured duct systems are not suitable for below-grade installations. If concrete is to be poured directly over the ducts, then the duct construction and insulation system should be sturdy enough to resist the pressure and not collapse. Insulation should be of a type that will not compress, or it should be located inside a rigid duct enclosure. The only time that common flex ducts are suitable in a below-grade application is when a channel is provided in the slab.

Indoor Air Quality and Mechanical Ventilation

§150(o)

See Section 4.6 of this chapter for details.

4.4.2 Prescriptive Requirements

Duct Insulation

§151(f)10

For Package C, the duct insulation requirement is R-8 in all climate zones. For Packages D& E, the requirement varies between R-4.2 and R-8.0 depending on climate zone. See Standards Tables 151-C & 151-D (reproduced in Appendix B of this document) for details.

Duct Leakage

§151(f)10

Duct sealing, including field verification and diagnostic testing, is required in all climate zones for all three prescriptive packages C, D and E. The details of the testing methods are covered in RA3.1 of the Reference Residential Appendix. The bottom line requirement for new duct systems is that leakage is less than 6 percent of the supply airflow. (Note that the requirement is slightly less stringent for testing of existing duct systems as described in Chapter 8 of this Compliance Manual, Additions and Alterations).

To comply with the duct-sealing requirement, the installer must first perform the tests and document the results in the applicable portion of the CF-6R form. In addition, a HERS rater must provide independent diagnostic testing and verification and then record the findings on the CF-4R form.

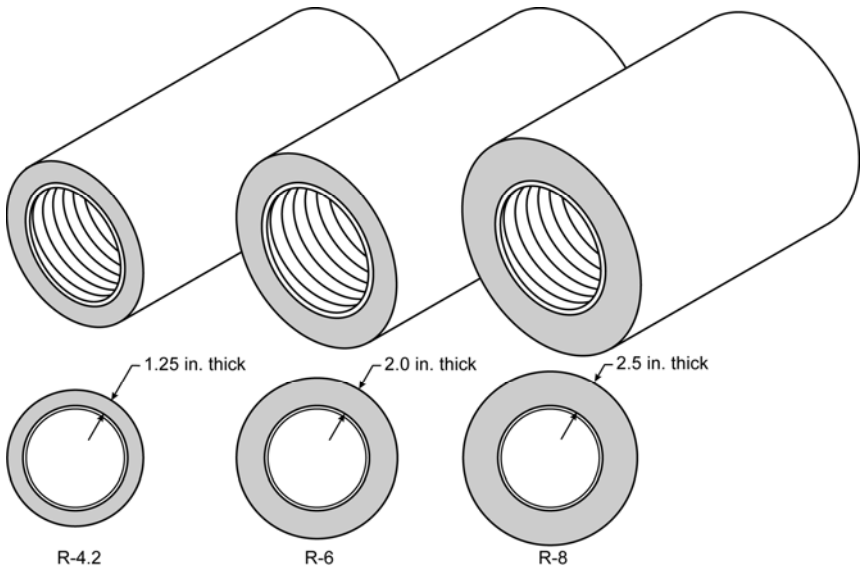

Figure 4-7 – R-4.2, R-6, and R-8 Ducts

The alternative to duct testing is to use the performance compliance method. In this case, the computer program will automatically assume that the standard design (baseline) has been tested and sealed, while the proposed design will default to a higher leakage value.

4.4.3 Compliance Options

The Standards provide credit for several compliance options related to duct design and construction. These options are described below along with some general duct construction guidelines.

Supply Duct Location

There are three ways to achieve credit for favorable duct location when using the performance compliance method.

First, credit is available if no more than 12 LF (linear feet) of supply duct are outside conditioned space. This total must include the air handler and plenum length. This credit results in a reduction of duct surface area in the computer compliance programs. This option requires certification by the installer and field verification by a HERS rater.

The second alternative applies when 100 percent of the supply ducts are located in either the crawlspace or the basement rather than in the attic. To achieve this credit, a duct layout must be included in the plans showing that all supply registers are located in the floor (or at least no more than 2 ft above the floor). The compliance software will include this measure on the Certificate of Compliance in the Special Features Inspection Checklist. This option does not require field verification by a HERS rater.

Third, credit for a high efficiency duct design is available through the Diagnostic Supply Duct Location, Surface Area, and R-value compliance option, which is described below. This option requires field verification of the duct design layout drawing(s) by a HERS rater. Verified duct design, when required, will be included in the HERS Required Verification list on the Certificate of Compliance (CF-1R).

There is no compliance credit provided for choosing a heating system such as a wall furnace, floor heater, or room heater even though those systems typically have no ducts. For these cases, the standard design in the compliance calculation uses the same type of system and also has no ducts. However, other systems, such as hydronic heating systems with a central heater or boiler and multiple terminal units, are considered central HVAC systems that are compared to a ducted system in the Standard Design. If the hydronic system has no ducts, there may be a significant energy credit through the performance method.

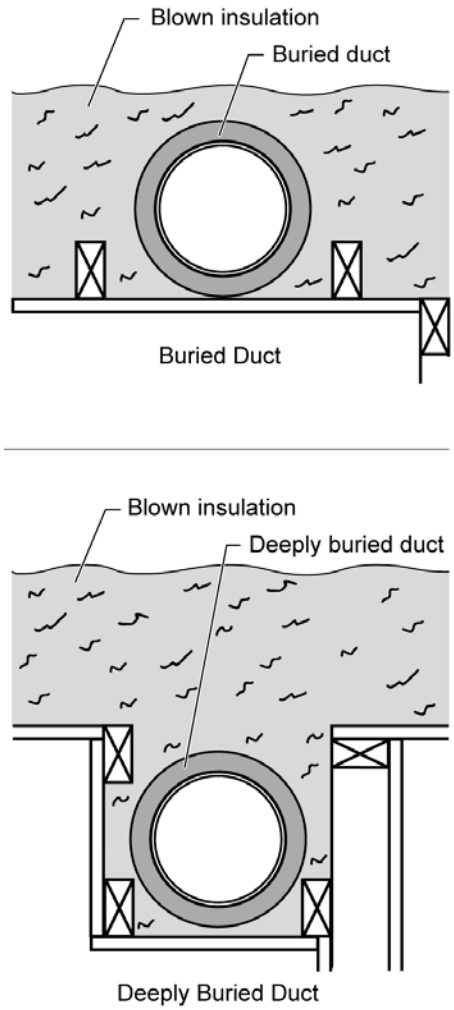

Figure 4-8 – Example: Buried Ducts on Ceiling and Deeply Buried Ducts

Duct Insulation

Performance credit is also available if all of the ducts are insulated to a level higher than required by the prescriptive package. If ducts with multiple R-values are installed, the lowest duct R-value must be used for the entire duct system. However, the air handler, plenum, connectors, and boots can be insulated to the mandatory minimum R-value.

As an alternative when there is a mix of duct insulation R-values, credit is available through the method described in the next section.

Diagnostic Supply Duct Location, Surface Area, and R-value

This compliance option allows the designer to take credit for a high efficiency duct design that incorporates duct system features that do not meet the criteria for the duct location and/or insulation compliance options described above. This method requires that the designer must enter the design characteristics of all supply ducts that are not located within conditioned space. The information required for the

input to the compliance software includes the length, diameter, insulation R-value, and location of all supply ducts. This method will result in a credit if the proposed duct system is better than the standard design, which exactly meets the prescriptive insulation requirement and has supply duct surface area set at 27 percent of floor area.

In order to claim this credit, the duct system design must be documented on plans that are submitted to the enforcement agency and posted at the construction site for use by the installation persons, the enforcement agency field inspector, and the HERS rater (Verified Duct Design). The duct system must be installed in accordance with the approved duct system plans, and the duct system installation must be certified by the installer on the CF-6R form and verified by a HERS rater on the CF-4R form. Details of this compliance option are described in Section 3.12.3 of the Residential ACM Manual, and verification procedures are described in RA3.1 of the Reference Residential Appendix.

This compliance option also allows credit for the special case of ducts that are buried by blown attic insulation. For ducts that lie on the ceiling (or within 3.5 inch of the ceiling), the effective R-value is calculated based on the duct size and the depth of ceiling insulation as shown in Table R3-38 in the Residential ACM Manual. This case is referred to as “Buried Ducts on the Ceiling”. For the case of Deeply Buried Ducts, which are ducts that are enclosed in a lowered portion of the ceiling and completely covered by attic insulation, then the effective R-value allowance in the compliance calculations is R-25 when the attic insulation is fiberglass and R-31 for cellulose attic insulation. In order to take credit for buried ducts, the system must meet the verified duct design criteria described above, be diagnostically tested for duct sealing compliance by a HERS rater according to Reference Residential Appendix RA3.1, and meet the requirements for high insulation installation quality described in Reference Residential Appendix RA3.5. Verified prescriptive cooling coil airflow is required when a measure is selected for compliance that has a verified duct design as a prerequisite.

Ducts in Attics with Radiant Barriers

Installation of a radiant barrier in the attic increases the duct efficiency by lowering attic summer temperatures. Compliance credit for radiant barriers requires listing of the radiant barrier in the Special Features and Modeling Assumptions in order to aid the local enforcement agency’s inspections. Compliance credit for a radiant barrier does not require HERS rater verification.

4.4.4 Duct Installation Standards

The mandatory duct construction measures referenced in Section 4.4.1 above state that duct installations must comply with 2007 California Mechanical Code Sections 601, 602, 603, 604, 605, and the applicable requirements of the 2008 California Building Energy Efficiency Standards. Some of the highlights of these requirements are listed in this section along with some guidance for recommended quality construction practice.

Tapes and Clamps

All tapes and clamps must meet the requirements of §150(m).

Cloth-back rubber-adhesive tapes must be used only in combination with mastic and draw bands, or have on its backing the phrase "CEC approved," a drawing of a fitting to plenum joint in a red circle with a slash through it (the international symbol of prohibition), and a statement that it cannot be used to seal fitting to plenum and junction box joints.

All Joints Must Be Mechanically Fastened

For residential round metal ducts, installers must overlap the joint by at least 1½ inch and use three sheet metal screws equally spaced around the joint (see Figure 4-9).

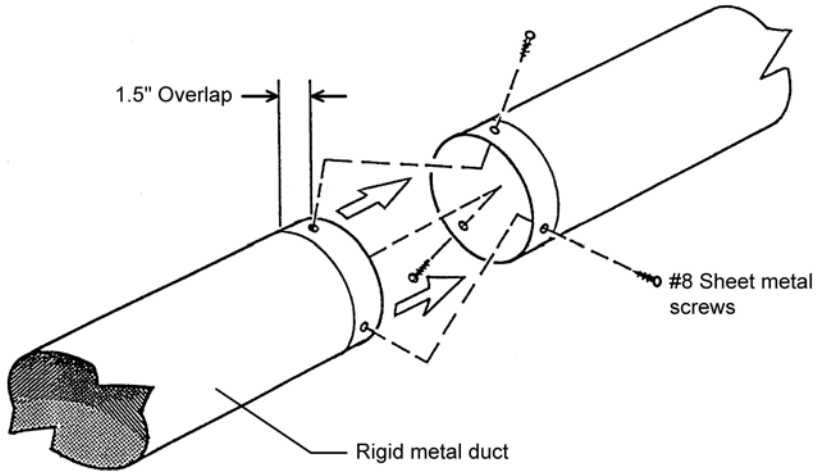

Source: Richard Heath & Associates/Pacific Gas & Electric

Figure 4-9 – Connecting Round Metallic Ducts

For round non-metallic flex ducts, installers must insert the core over the metal collar or fitting by at least 1 in. This connection may be completed with either mesh, mastic and a clamp, or two wraps of tape and a clamp.

For the mesh and mastic connection, the installer must first tighten the clamp over the overlapping section of the core, apply a coat of mastic covering both the metal collar and the core by at least 1 in., and then firmly press the fiber mesh into the mastic and cover with a second coat of mastic over the fiber mesh (see Figure 4-10).

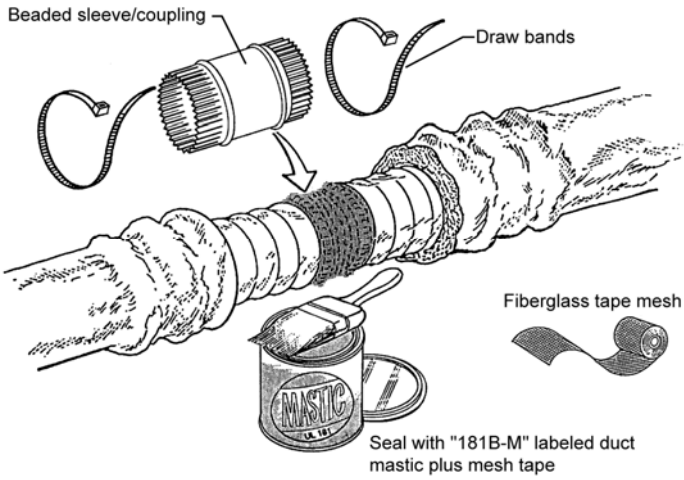

Source: Richard Heath & Associates/Pacific Gas & Electric

Figure 4-10 – Connecting Flex Ducts Using Mastic and Mesh

For the tape connection first apply at least two wraps of approved tape covering both the core and the metal collar by at least 1 inch, then tighten the clamp over the overlapping section of the core (see Figure 4-11).

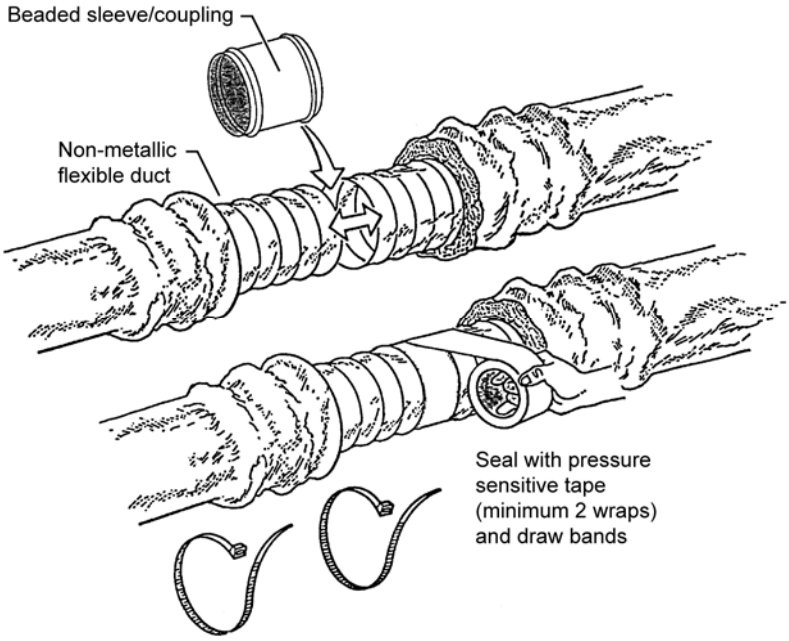

Source: Richard Heath & Associates/Pacific Gas & Electric

Figure 4-11 –Connecting Flex Ducts Using Tape and Clamps

All Joints Must Be Made Airtight (§150(m))

Seal joints with mastic, tape, aerosol sealant, or other duct-closure system that meets the applicable requirements of UL 181, UL 181A, UL 181B, or UL 723. Duct systems shall not use cloth-back, rubber-adhesive duct tape regardless of UL designation, unless it is installed in combination with mastic and clamps. The Energy Commission has approved three cloth-back duct tapes with special butyl

synthetic adhesives rather than rubber adhesive to seal flex duct to fittings. These tapes are:

- Polyken 558CA, Nashua 558CA, manufactured by Berry Plastics Tapes and Coatings Division and
- Shurtape PC 858CA, manufactured by Shurtape Technologies, Inc.

These tapes passed Lawrence Berkeley Laboratory tests comparable to those that cloth-back rubber-adhesive duct tapes failed (the LBNL test procedure has been adopted by the American Society of Testing and Materials as ASTM E2342-03). These tapes are allowed to be used to seal flex duct to fittings without being in combination with mastic. These tapes cannot be used to seal other duct system joints, such as the attachment of fittings to plenums and junction boxes. These tapes have on their backing a drawing of a fitting to plenum joint in a red circle with a slash through it (the international symbol of prohibition) to illustrate where they are not allowed to be used, and installation instructions in their packing boxes that explain how to install them on duct core to fittings and a statement that the tapes cannot be used to seal fitting to plenum and junction box joints.

Mastic and mesh should be used where round or oval ducts join flat or round plenums (see Figure 4-12).

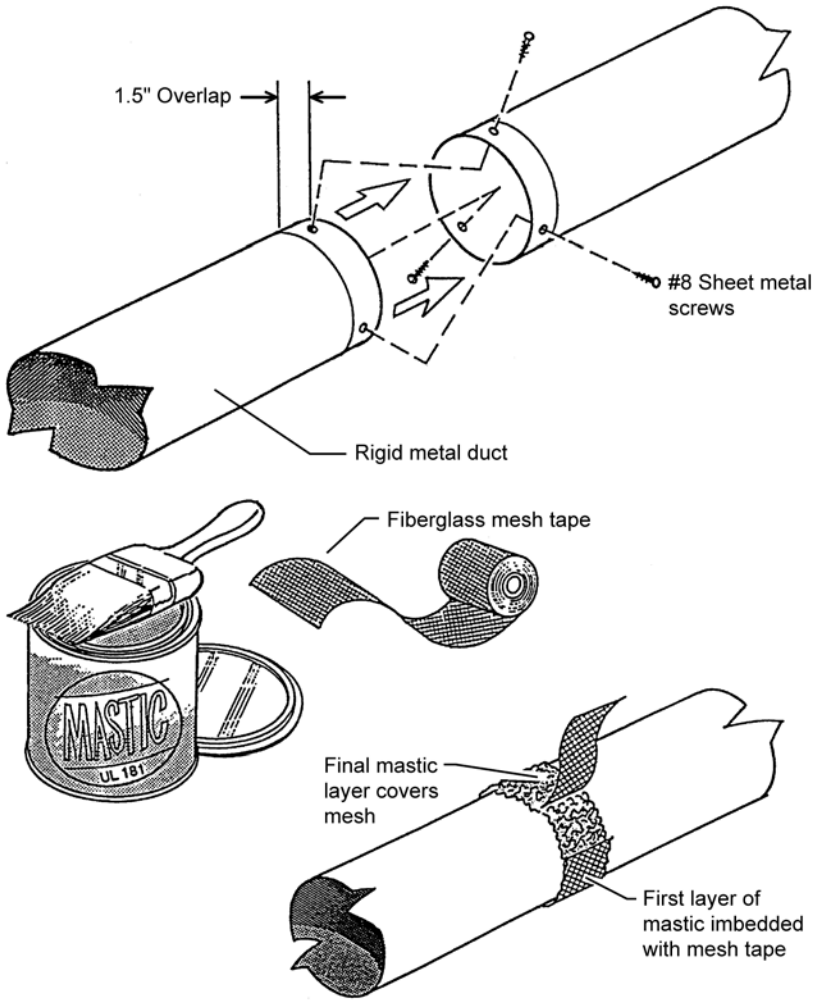

Source: Richard Heath & Associates/Pacific Gas & Electric

Figure 4-12 – Sealing Metallic Ducts with Mastic and Mesh

All ducts must be adequately supported.

Both rigid duct and flex duct may be supported on rigid building materials between ceiling joists or on ceiling joists.

For rigid round metal ducts that are suspended from above, hangers must occur 12 ft apart or less (see Figure 4-13).

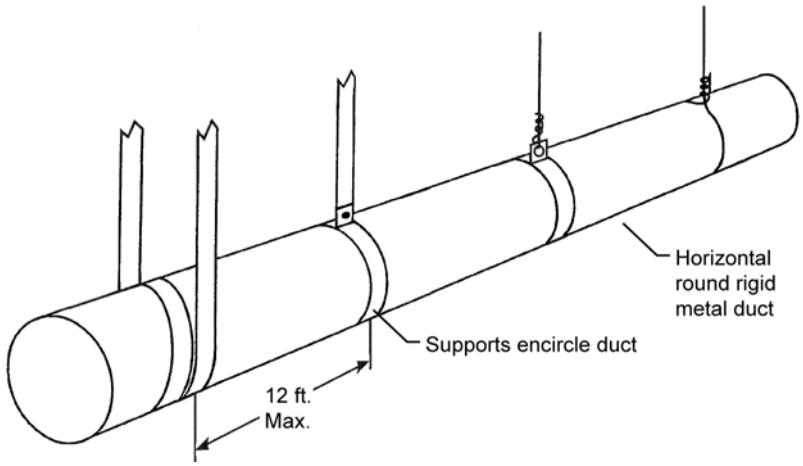

Source: Richard Heath & Associates/Pacific Gas & Electric

Figure 4-13 – Options for Suspending Rigid Round Metal Ducts

For rectangular metal ducts that are suspended from above, hangers must occur at a minimum of 4 ft to 10 ft depending on the size of the ducts (see Table 6-2-A in Appendix A of the 2007 California Mechanical Code). Refer to Figure 4-14.

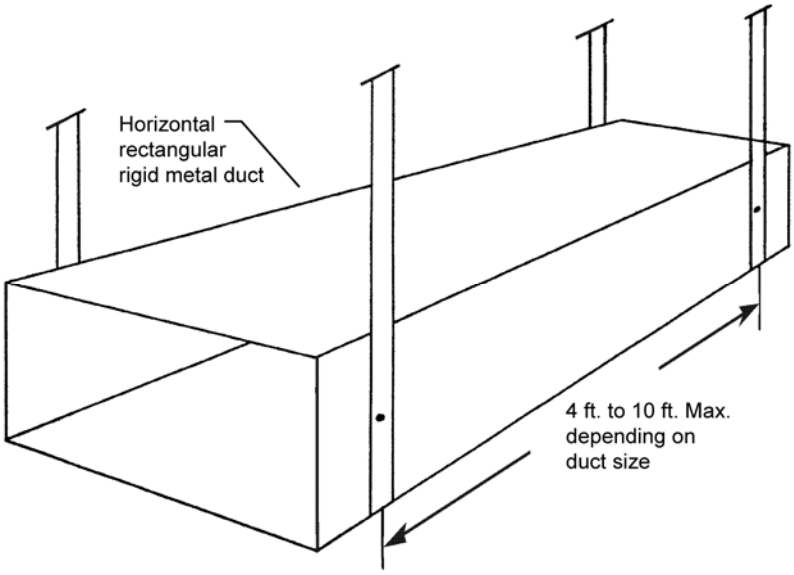

Source: Richard Heath & Associates/Pacific Gas & Electric

Figure 4-14 – Options for Suspending Rectangular Metal Ducts

For flex ducts that are suspended from above, hangers must occur at 4 ft apart or less and all fittings and accessories must be supported separately by hangers (see Figure 4-15).

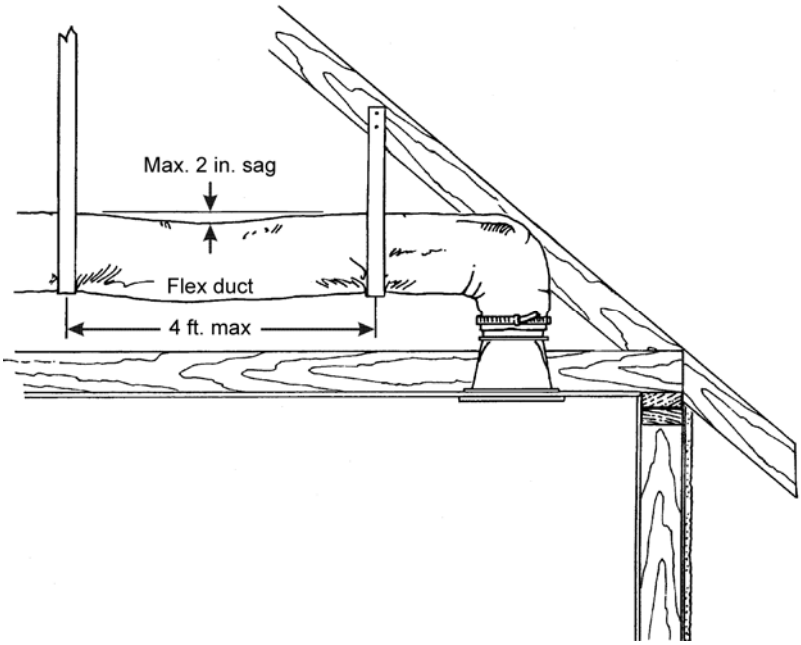

Source: Richard Heath & Associates/Pacific Gas & Electric

Figure 4-15 – Minimum Spacing for Suspended Flex Ducts

For vertical runs of flex duct, support must occur at 6 ft intervals or less (see Figure 4-16)

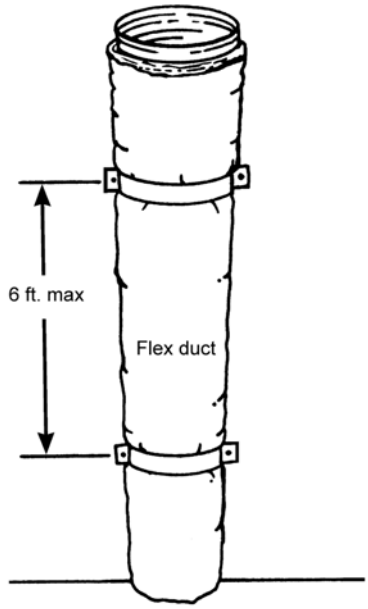

Source: Richard Heath & Associates/Pacific Gas & Electric

Figure 4-16 – Minimum Spacing for Supporting Vertical Flex Ducts

The routing and length of all duct systems can have significant impacts on system performance due to possible increased airflow resistance. The Energy Commission recommends using the minimum length of duct to make connections and the minimum possible number of turns.

For flexible duct, the Energy Commission recommends fully extending the duct by pulling the duct tight and cutting off any excess duct and avoiding bending ducts across sharp corners or compressing them to fit between framing members (see Figure 4-17). Also avoid incidental contact with metal fixtures, pipes, or conduits or installation of the duct near hot equipment such as furnaces, boilers, or steam pipes that are above the recommended flexible duct use temperature.

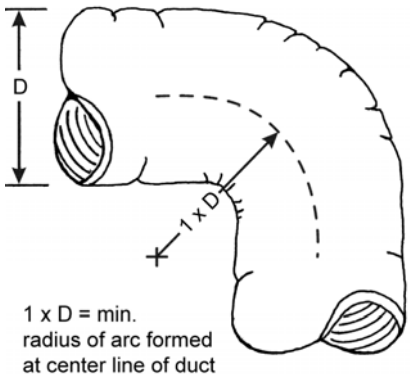

Source: Richard Heath & Associates/Pacific Gas & Electric

Figure 4-17 – Minimizing Radius for Flex Duct Bends

All joints between two sections of duct must be mechanically fastened and substantially airtight. For flex duct this must consist of a metal sleeve no less than 4 inch in length between the two sections of flex duct.

All joints must be properly insulated. For flex ducts this must consist of pulling the insulation and jacket back over the joint and using a clamp or two wraps of tape.

Aerosol sealant injection systems are an alternative that typically combines duct testing and duct sealing in one process. Figure 4-18 shows the computer-controlled injection fan temporarily connected to the supply duct. The plenum is blocked off by sheet metal to prevent sealant from entering the furnace. Supply air registers are also blocked temporarily to keep the sealant out of the house. Note that ducts must still be mechanically fastened even if an aerosol sealant system is used.

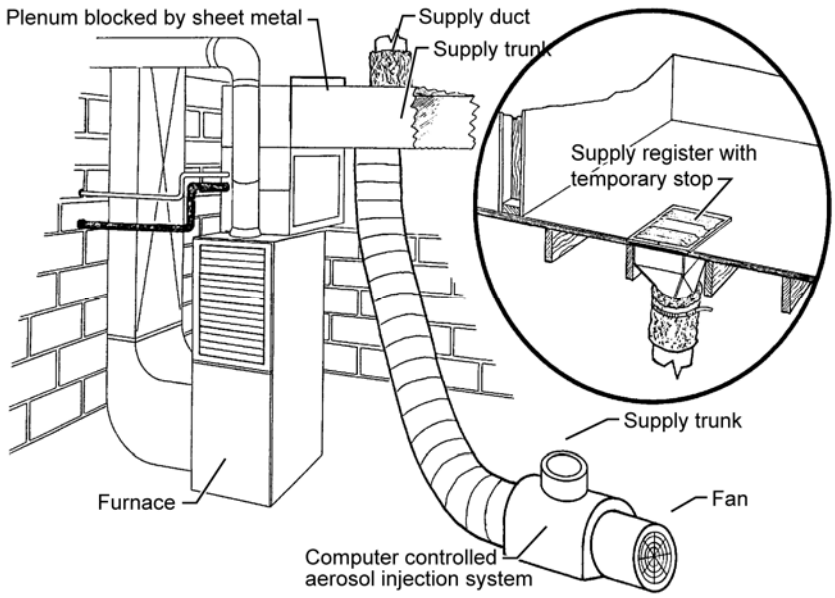

Source: Richard Heath & Associates/Pacific Gas & Electric

Figure 4-18 – Computer-Controlled Aerosol Injection System

4.5 Controls

4.5.1 Thermostats

Automatic setback thermostats can add both comfort and convenience to a home. Occupants can wake up to a warm house in the winter and come home to a cool house in the summer without using unnecessary energy.

§151(f)9

A thermostat is always required for central systems whether the prescriptive or performance compliance method is used. An exception is allowed only if:

(1) the building complied using a computer performance approach with a non-setback thermostat; and

(2) the system is one of the following non-central types:

- Non-central electric heaters

- Room air conditioners
- Room air conditioner heat pumps
- Gravity gas wall heaters
- Gravity floor heaters
- Gravity room heaters
- Wood stoves
- Fireplace or decorative gas appliances

When it is required, the setback thermostat must have a clock or other mechanism that allows the building occupant to schedule the heating and/or cooling set points for at least four periods over 24 hours.

If more than one piece of heating equipment is installed in a residence or dwelling unit, the set-back requirement may be met by controlling all heating units by one thermostat or by controlling each unit with a separate thermostat. Separate heating units may be provided with a separate on/off control capable of overriding the thermostat.

§112(b)

Note that thermostats for heat pumps must be "smart thermostats" that minimize the use of supplementary electric resistance heating during startup and recovery from setback, as discussed earlier in the heating equipment section.

Example 4-2

Question

Am I exempt from the requirement for a thermostat if I have a gravity wall heater or any of the equipment types listed in the exception to §112(c)?

Answer

The answer depends on the compliance approach. Under the prescriptive approach, Exception to §112(c) exempts gravity wall, floor and room heaters from the thermostat requirements. However, under the performance approach, the exception requires that "the resulting increase in energy use due to the elimination of the thermostat shall be factored into the compliance analysis". This means that under the performance scenario, if the building is modeled with a non-setback thermostat, any energy lost because of this will have to be made up using other efficiency features.

4.5.2 Zonal Control

An energy compliance credit is provided for zoned heating and air-conditioning systems, which save energy by providing selective conditioning for only the occupied areas of a house. A house having at least two zones (living and sleeping) may qualify for this compliance credit. The equipment may consist of one air-conditioning system for the living areas and another system for sleeping areas or a single system with zoning capabilities, set to turn off the sleeping areas in the daytime and the living area unit at night (see Figure 4-19).

There are unique eligibility and installation requirements for zonal control to qualify under the Standards. The following steps must be taken for the building to show compliance with the Standards under this exceptional method:

1. **Temperature Sensors**. Each thermal zone, including a living zone and a sleeping zone, must have individual air temperature sensors that provide accurate temperature readings of the typical condition in that zone.
2. **Habitable Rooms**. Each habitable room in each zone must have a source of space heating and/or cooling (if zonal credit for cooling is desired) such as forced air supply registers or individual conditioning units. Bathrooms, laundry, halls and/or dressing rooms are not habitable rooms.
3. **Non-closeable Openings**. The total non-closeable opening area (W) between adjacent living and sleeping thermal zones (i.e., halls, stairwells, and other openings) must be less than or equal to 40 ft². All remaining zonal boundary areas must be separated by permanent floor-to-ceiling walls and/or fully solid, operable doors capable of restricting free air movement when in the closed position.

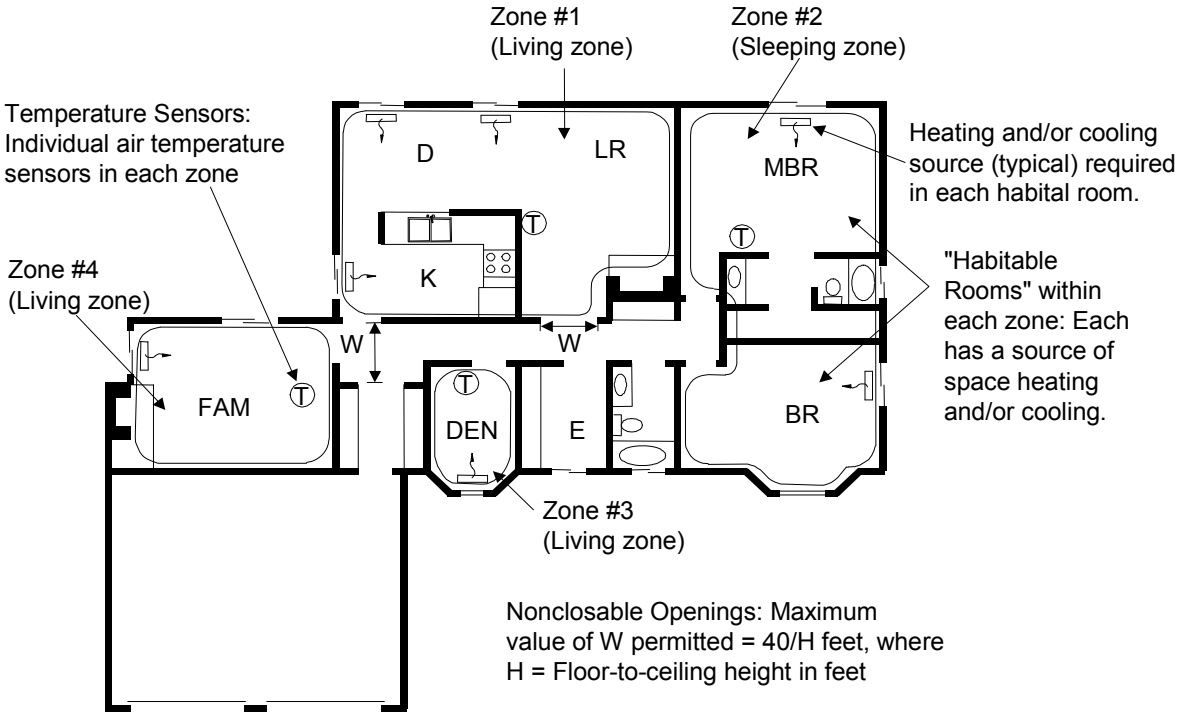

Figure 4-19– Zonal Control Example

4. **Thermostats**. Each zone must be controlled by a central automatic dual setback thermostat that can control the conditioning equipment and maintain preset temperatures for varying time periods in each zone independent of the other.

Other requirements specific to forced air ducted systems include the following:

1. Each zone must be served by a return air register located entirely within the zone. Return air dampers are not required.

2. Supply air dampers must be manufactured and installed so that when they are closed, there is no measurable airflow at the registers.
3. The system must be designed to operate within the equipment manufacturer's specifications.
4. Air is to positively flow into, through, and out of a zone only when the zone is being conditioned. No measurable amount of supply air is to be discharged into unconditioned or unoccupied space in order to maintain proper airflow in the system.

Although multiple thermally distinct living and/or sleeping zones may exist in a residence, the correct way to model zonal control for credit requires only two zones: one living zone and one sleeping zone. All separate living zone components must be modeled as one single living zone:the same must be done for sleeping zones.

Example 4-3

Question

In defining the living and sleeping zones for a home with a zonally-controlled HVAC system, can laundry rooms and bathrooms (which are not habitable spaces) be included on whichever zone they are most suited to geographically (e.g., a bathroom located near bedrooms)?

Answer

Yes. For computer modeling purposes, include the square footage of any non-habitable or indirectly conditioned spaces, with the closest zone.

Example 4-4

Question

I have two HVAC systems and want to take zonal control credit. Can the return air grilles for both zones be located next to each other in the 5 ft wide by 9 ft high hallway (in the same zone)?

Answer

No. Because of the need to prevent mixing of air between the conditioned zone and the unconditioned zone, it is necessary to (1) have the return air for each zone within that zone, and (2) limit any non-closeable openings between the two zones to 40 ft² or less. Unless these criteria and the other criteria listed in this chapter can be met, credit for a zonally controlled system cannot be taken.

4.6 Indoor Air Quality and Mechanical Ventilation

§150(o) and §152(a)

As houses have been tightened up over the last twenty years due to energy cost concerns and the use of large sheet goods and housewrap, what used to be normal infiltration and exfiltration has been significantly reduced. In the meantime, we have introduced thousands of chemicals into our houses through building materials, cleaners, finishes, packaging, furniture, carpets, clothing and other products. The California Standards have always assumed adequate indoor air quality would be provided by a combination of infiltration and natural ventilation and that home occupants would open windows as necessary to make up any shortfall in infiltration. However, Commission sponsored research on houses built under the 2001 Standards has revealed lower than expected overall ventilation rates, higher than expected indoor concentration of chemicals such as formaldehyde and many occupants who do not open windows regularly for ventilation. The 2008 update includes mandatory mechanical ventilation intended to improve indoor air quality in homes with low infiltration and natural ventilation rates.

This section addresses the requirements for mechanical ventilation. With the 2008 update, all low-rise residential buildings are required to have a whole-building ventilation system and satisfy other requirements to achieve acceptable indoor air quality (IAQ). The Energy Commission adopted the requirements of ASHRAE Standard 62.2-2007, except that opening and closing windows (although permitted by ASHRAE) is not an acceptable option for providing whole-building ventilation in California.

The mechanical ventilation and indoor air quality requirements are mandatory measures. The applicable sections are §150(o) for new construction and §152(a) for additions.

Ventilation for Indoor Air Quality §150(o)

Ventilation for Indoor Air Quality. All dwelling units shall meet the requirements of ANSI/ASHRAE Standard 62.2. Window operation is not a permissible method of providing the Whole-Building Ventilation required in Section 4 of that Standard.

Exception 5 to §152(a): Additions 1,000 ft^2 or less are exempt from the requirements of §150(o). For additions larger than 1,000 ft^2, application of §150(o) shall be based on the conditioned floor area of the entire dwelling unit, not just the addition.

The indoor air quality requirements are not triggered for alterations in existing low-rise residential buildings.

The following bullet points summarize the key requirements for most residences.

1. A whole-building mechanical ventilation system shall be provided. The typical solutions are described in the following section.
2. Kitchens and bathrooms shall have local exhaust systems vented to the outdoors.
3. Clothes dryers shall be vented to the outdoors.

Miscellaneous indoor air quality design requirements apply, including:

1. Ventilation air shall come from the out of doors and shall not be transferred from adjacent dwelling units, garages or crawlspaces.

2. Ventilation system controls shall be labeled and the home owner shall be provided with instructions on how to operate the system.
3. Combustion appliances shall be properly vented and air systems shall be designed to prevent back drafting.
4. The wall and openings between the house and the garage shall be sealed.
5. Habitable rooms shall have windows with a ventilation area of at least 4 percent of the floor area (see ventilation opening area topic in Section 4.6.5 below)
6. Mechanical systems including heating and air conditioning systems that supply air to habitable spaces shall have MERV 6 filters or better.
7. Air inlets (not exhaust) shall be located away from known contaminants.
8. Air moving equipment used to meet either the whole-building ventilation requirement or the local ventilation exhaust requirement shall be rated in terms of airflow and sound.
    a. All continuously operating fans shall be rated at a maximum of 1.0 sone.
    b. Intermittently operated whole-building ventilation fans shall be rated at a maximum of 1.0 sone.
    c. Intermittently operated local exhaust fans shall be rated at a maximum of 3.0 sone.
    d. Remotely located air-moving equipment (mounted outside of habitable spaces) need not meet sound requirements if there is at least 4 feet of ductwork between the fan and the intake grill.

Compliance and Enforcement

Compliance with Indoor Air Quality and Mechanical Ventilation requirements is verified by the enforcement agency. There are no HERS verification requirements specific to any criteria given in ASHRAE 62.2. However, if a central heating/cooling system air handler fan is utilized for providing ventilation air to the dwelling, the air handler must meet the prescriptive fan Watt draw criteria which requires the installer to perform the diagnostic protocol given in RA3.3, and a HERS rater must perform a verification of the air handler utilizing the same protocol (see CFI ventilation topic in the Supply Ventilation section below).

<u>Certificate of Compliance reporting requirements:</u>

1. When compliance with the Standards utilizes the performance approach, information that describes the whole-building ventilation system must be given as input to the compliance software, thus a performance Certificate of Compliance (CF-1R) will report:
    - the ventilation airflow rate (calculated value) that must be delivered by the installed system to meet the whole-building ventilation requirement, and

- the system type selected to meet the whole-building ventilation requirement, and
- the fan power ratio (W/cfm) for the whole-building ventilation system that was selected, and
- if applicable, the requirement for HERS verification of fan Watt draw of the central heating/cooling system air handler when CFI ventilation system is the whole-building ventilation system type selected.

The whole-building ventilation system that is installed in the dwelling must conform to the requirements given on the performance CF-1R in order to comply. See section 4.6.3 Whole-Building Mechanical Ventilation Energy Consumption below for more information about the performance calculations for whole-building ventilation systems. There are no requirements for providing information on the performance CF-1R to describe fans installed for other purposes such as local ventilation exhaust.

2. When compliance with the Standards utilizes the prescriptive approach, information that describes the whole-building ventilation system is not required on the CF-1R. Thus, unless otherwise required by the enforcement agency, calculation of the required whole-building ventilation airflow rate and selection of the whole-building ventilation system type can be accomplished at the time of installation. There are no requirements for providing information describing fans installed for other purposes such as local exhaust on the prescriptive CF-1R.

The enforcement agency may require additional information/documentation describing the ventilation systems be submitted along with the CF-1R at plan check.

<u>Installation Certificate reporting requirements:</u>

The builder/installer must complete an Installation Certificate (CF-6R-MECH-05) for the dwelling that identifies the installed mechanical ventilation and indoor air quality features for the dwelling.

The Installation Certificate requires that the installer provide:

1. Calculated value for whole-building ventilation airflow rate requirement for continuous and/or intermittent operation per ASHRAE 62.2 equations (see 4.6.2 and 4.6.4 below)
2. Determination of local ventilation exhaust airflow rate requirements for continuous and/or intermittent operation
3. Whole-building ventilation and local ventilation exhaust system/design type(s)
4. Installed fan equipment make, model, and rated performance used to meet the Standard
5. Installed duct system design information if compliance is being demonstrated by inspection of the prescriptive design criteria or manufacturer's design criteria

6. Measured airflow rate of the installed system if compliance is being demonstrated by the airflow measurement method
7. Confirmation that other requirements given in ASHRAE 62.2 have been met (see section 4.6.5 below)

The Installation Certificate must be signed by the builder/installing contractor who is responsible for the installed mechanical ventilation and indoor air quality related features, and the completed/signed Installation Certificate must be posted in the field for use by the building inspector at final inspection.

Reducing Pollutant Emissions from Interior Materials, Finishes, and Furnishings

The requirements of ASHRAE Standard 62.2 focus on whole-building mechanical ventilation and local ventilation exhaust at known sources of pollutants or moisture such as kitchens, baths, and laundries. While not a requirement of the Standards, builders and home owners should select materials, finishes and furnishings that have no or low emissions of air pollutants, including formaldehyde and volatile organic compounds (VOCs).

Keeping air pollutants out of the building in the first place is more effective than flushing them out later through ventilation. Most building materials emit some level of VOCs, formaldehyde or other pollutants, and the resultant indoor pollutant exposures can pose a substantial risk for health effects such as cancer, asthma attacks, and irritation of the eyes, nose, and throat. Pollutant emissions are highest immediately after a new product is installed, but emissions may continue for days, weeks, months, or years. Build-up of air pollutants in the home is affected by ventilation, infiltration, and filtration rates which are the subjects of ASHRAE Standard 62.2.

Choosing materials, finishes and furnishings with low pollutant emissions requires some research on the part of the builder or the homeowner. Testing is required to determine the level of pollutant emissions. To this end, the California Department of Public Health (CDPH) has developed a standardized test procedure for interior materials such as paints, adhesives, sealants, sealers, carpets, resilient flooring, furniture, and ceiling panels. Construction assemblies or systems are tested, e.g., resilient floor tile is tested with the required adhesive. Typically, a small sample of the product or material is tested (usually a 6 inch square), but the test procedure may also be applied to larger items such as chairs, desks and other furnishings.

The Collaborative for High Performance Schools (CHPS) maintains a database of materials that have been tested by third-party groups to the CDPH protocol or an equivalent protocol. The list includes materials that are safe to use in classrooms. While not designed for the specific application of residences where ventilation rates are lower than those in schools, the list provides guidance on which products have low emissions. See the following link for more information:

http://www.betterbuildingsbetterstudents.org/dev/Drupal/node/381

In addition, simple measures can be taken during construction to reduce the emissions of pollutants in a building before it is occupied. Such measures include pre-conditioning building materials and furnishings before installation, providing continuous exhaust ventilation once the materials are installed, and controlling dust buildup on interior surfaces and ductwork. CHPS has developed required measures of this type for classrooms, but these measures would also be effective

in new homes with mechanical ventilation systems. The California Air Resources Board (ARB) also provides guidance for reducing indoor air pollution in homes. For more information, see:

- ARB Indoor Air Quality Guidelines, http://www.arb.ca.gov/research/indoor/guidelines.htm.
- CHPS 2009 Criteria (Volume III)

  Indoor Air Quality and Thermal Comfort section

  http://www.chps.net/manual/.

4.6.1 Typical Solutions for Whole-Building Ventilation

There are three generic solutions to meeting the outside air ventilation requirement:

1. Exhaust ventilation,
2. Supply ventilation, or a
3. Combination of supply and exhaust ventilation. If the supply and exhaust flows are within 10 percent of each other this is called a balanced ventilation system.

Whole-building ventilation may be achieved through a single fan or a system of fans that are dedicated to this ventilation only. Or it may be carried out by fans that also provide local exhaust or distribute heating and cooling.

Exhaust Ventilation

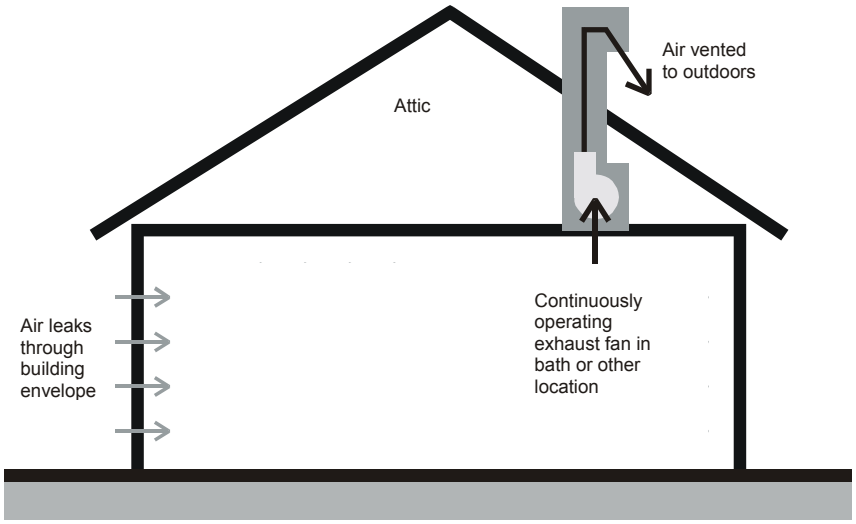

Figure 4-20 – Exhaust Ventilation Example

Exhaust Ventilation is probably the most common solution. This is usually achieved by a quiet ceiling-mounted bath fan or remote-mounted inline or exterior-mounted fan. Air is drawn from the house by the exhaust fan and outdoor air enters the house through leaks in the building envelope.

Many high quality bath fans are available in the 30 to 150 cfm size range, and are quiet enough to be used continuously. One or more fans of this size will meet the requirements of most homes. The exhaust fan can be a dedicated IAQ fan or it can be a more typical bath fan that is used for both whole-building ventilation and local ventilation.

Inline fans (either single pickup or multipoint pickup) can be a very effective method of providing quiet exhaust ventilation from one or several bathrooms. As discussed above, inline fans can be located in the garage, attic, basement, or mechanical room. Exterior-mounted fans can be mounted on the exterior wall or on the roof. A sound rating is not required for remote or exterior fans as long as there is at least 4 ft of duct between the closest pickup grille and the fan.

Supply Ventilation

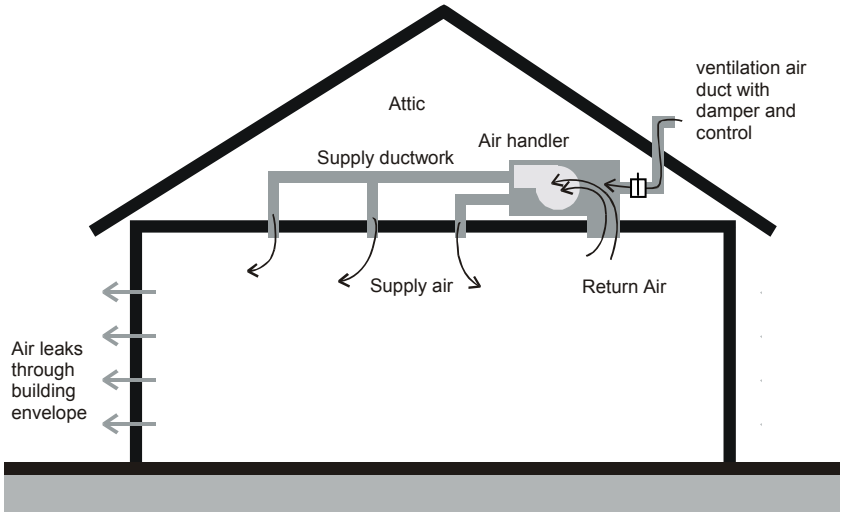

Figure 4-21 – Supply Ventilation Example

Supply ventilation works in just the opposite way as exhaust ventilation. Outside air enters the house through a dedicated supply fan or through the central HVAC system air handler and escapes through leaks in the building envelope.

With the supply ventilation approach, the outdoor air inlet should be placed to avoid known areas of contaminants, such as the garage, barbeque areas, and chimneys. If a dedicated fan is used, care must be taken to avoid introducing too much outdoor air into one location and creating uncomfortable conditions. The air handler or supply fans can be located on the exterior of the house or dwelling unit, or in the garage, attic, basement, or mechanical room.

The ventilation air can be distributed by a dedicated ventilation air duct system that is separate from the central forced air distribution duct system. Alternatively, the central forced air heating/cooling system air handler can be configured to function as a supply ventilation system by installing a dedicated ventilation air duct that connects to the air handler's return plenum at one end, and connects on the other end to the outside of the dwelling to access fresh air from outdoors. This strategy, called Central Fan Integrated (CFI) ventilation, uses the negative pressure in the return plenum to pull the desired amount of outdoor air in through the ventilation air duct and into the return plenum. Then the central system air

handler distributes the ventilation air to all rooms in the dwelling. Also, a damper and controls must be installed that ensure the air handler delivers the required ventilation airflow regardless of the size of the heating or cooling load.

When discussing design and compliance considerations for CFI ventilation systems, it is important to draw the distinction between the central forced air system fan airflow (cooling coil airflow), and the much smaller airflow that is induced to flow into the return plenum from outdoors (ventilation airflow). Refer to figure 4-21 and note that the total airflow through the air handler (cooling coil airflow) is the sum of the return airflow and the outside air ducted to the return plenum (ventilation airflow).

CFI ventilation systems can use a very significant amount of electricity on an annual basis. Refer to the discussion on energy consumption of central fan integrated ventilation systems in section 4.6.3 below. Air handlers used in CFI ventilation systems are required to meet the prescriptive cooling coil airflow and fan Watt draw requirements in all climate zones.

ASHRAE Standard 62.2 also requires the installer to measure the ventilation airflow rate induced into the return plenum in a CFI system to ensure that it will meet the whole-building ventilation rate requirements regardless of the heating or cooling load when the dwelling is occupied. CFI systems are "intermittent" ventilation systems (see section 4.6.2). The results of the airflow measurement of the installed CFI system, and a description of the intermittent ventilation control schedule used for the CFI system must be given on the Installation Certificate for the system.

Note: the outside air (OA) ducts for CFI ventilation systems shall not be sealed/taped off during duct leakage testing. However, CFI OA ducts that utilize controlled motorized dampers, that open only when OA ventilation is required to meet ASHRAE Standard 62.2, and close when OA ventilation is not required, may be configured to the closed position during duct leakage testing.

Combination Ventilation

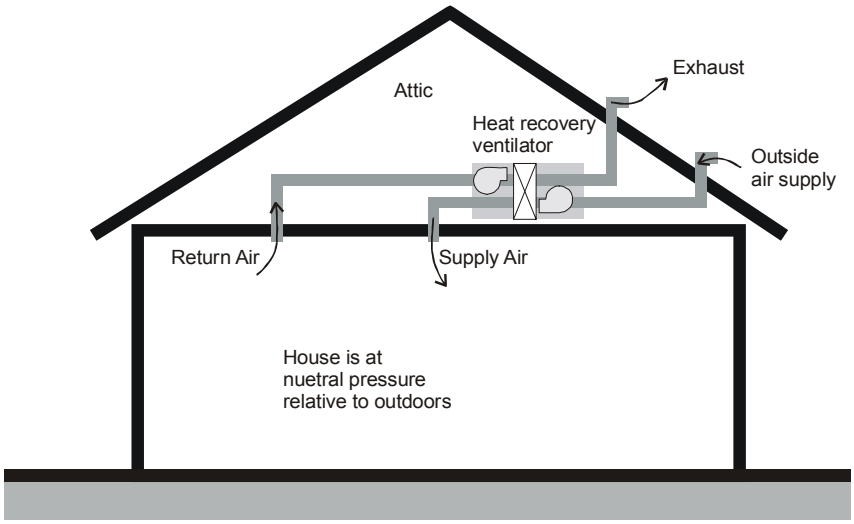

Figure 4-22 – Combination Ventilation Example

Combination systems use both exhaust fans and supply fans. If both fans supply the same airflow the system is balanced and the house has a neutral pressure.

Combination systems are often integrated devices, sometimes with a heat exchanger or heat recovery wheel. The supply and exhaust airstreams are typically of equal flow.

Combination systems can also consist of a mixture of supply fans and exhaust fans. It may be as simple as a quiet continuous bathroom exhaust fan matched to an outdoor air connection that introduces air into the return air plenum of a continuously-operating central heating/cooling system air handler. Note: ventilation systems that utilize constant operation of the central heating/cooling system air handler can use a very significant amount of electricity on an annual basis. Refer to the discussion on energy consumption of central fan integrated ventilation systems in section 4.6.3 below.

4.6.2 Whole-building Ventilation Flow Rate (Section 4 of ASHRAE 62.2)

The whole-building ventilation system may operate continuously or intermittently. The whole-building ventilation rate is determined for continuous ventilation, and if the system is operated intermittently, an adjustment is made.

Continuous Whole-building Ventilation

The continuous whole-building ventilation rate is 1 cfm for each 100 ft² of conditioned floor area (CFA) plus 7.5 cfm for each occupant. The number of occupants is approximated as the number of bedrooms plus one. For example, a three bedroom house is assumed to have four occupants. The required ventilation rate is give by the following equation.

Equation 4-1

$$Ventilation\ Rate\ (cfm) = \frac{CFA}{100} + 7.5 \times (Number\ Bedrooms + 1)$$

Instead of using one of the equations given above, Table 4-7 may be used to determine the required ventilation. This table allows the user to find the required ventilation rate directly if they know the floor area and number of bedrooms.

The size of the fan must be greater than or equal to the required capacity.

Table 4-7 – Continuous Whole-building Ventilation Rate (cfm)

	Bedrooms				
Conditioned Floor Area (ft²)	0-1	2-3	4-5	6-7	>7
≤1500	30	45	60	75	90
1501-3000	45	60	75	90	105
3001-4500	60	75	90	105	120
4501-6000	75	90	105	120	135
6001-7500	90	105	120	135	150
>7500	105	120	135	150	165

Example 4-5 – Required Ventilation

Question

What is the required continuous ventilation rate for a 3 bedroom, 1,800 ft² townhouse?

Answer

48 cfm. This is calculated as 1800/100 + (3+1)x7.5 = 48 cfm. Using Table 4-7, the required ventilation rate would be 60 cfm.

Example 4-6

Question

The house I am building has a floor area of 2,240 ft² and 3 bedrooms. My calculations come out to 52.4 cfm. Can I use a 50 cfm fan?

Answer

No, a 50 cfm fan does not meet the standard. You would need to select the next larger size fan, such as a unit rated at 55 cfm or 60 cfm. If you use Table 4-7 to select the fan size, you get 60 cfm.

Ventilation Rate for Combination Systems

When a combination ventilation system is used, meaning that both supply and exhaust fans are installed, the provided ventilation rate is the larger of the total supply airflow or the total exhaust airflow. The airflow rates of the supply and exhaust fans cannot be added together.

Example 4-7

Question

A 2,400 ft² house has exhaust fans running continuously in two bathrooms providing a total exhaust flow rate of 40 cfm, but the requirement is 60 cfm. What are the options for providing the required 60 cfm?

Answer

The required 60 cfm could be provided either by increasing the exhaust flow by 20 cfm or by adding a ventilation system that blows 60 cfm of outdoor air into the building. It cannot be achieved by using a make-up air fan blowing 20 cfm into the house.

Intermittent Whole-building Ventilation

In some cases, it may be desirable to design a whole-building ventilation system that operates intermittently. The most common example of intermittent ventilation is when outside air is ducted to the return plenum of the central heating/cooling system, and thus the central heating/cooling system fan is used to distribute the ventilation air to the rooms in the building (see CFI system described above in the supply ventilation section).

This type of ventilation is permitted as long as the ventilation airflow is increased to respond to the fewer hours of fan operation. The increased flow depends on the fraction of time the fans operate. Figure 4-23 shows the multiplier based on the total hours per day of fan operation. The multipliers in Figure 4-23 are determined from equation 4-2 (see below), which can be used in lieu of the graph. There is very little need to increase fan flow when the fans operate for more than about 20 hours per day. However, the required flow rate can be 10 to 20 times greater when the fans operate for less than 6 hours per day.

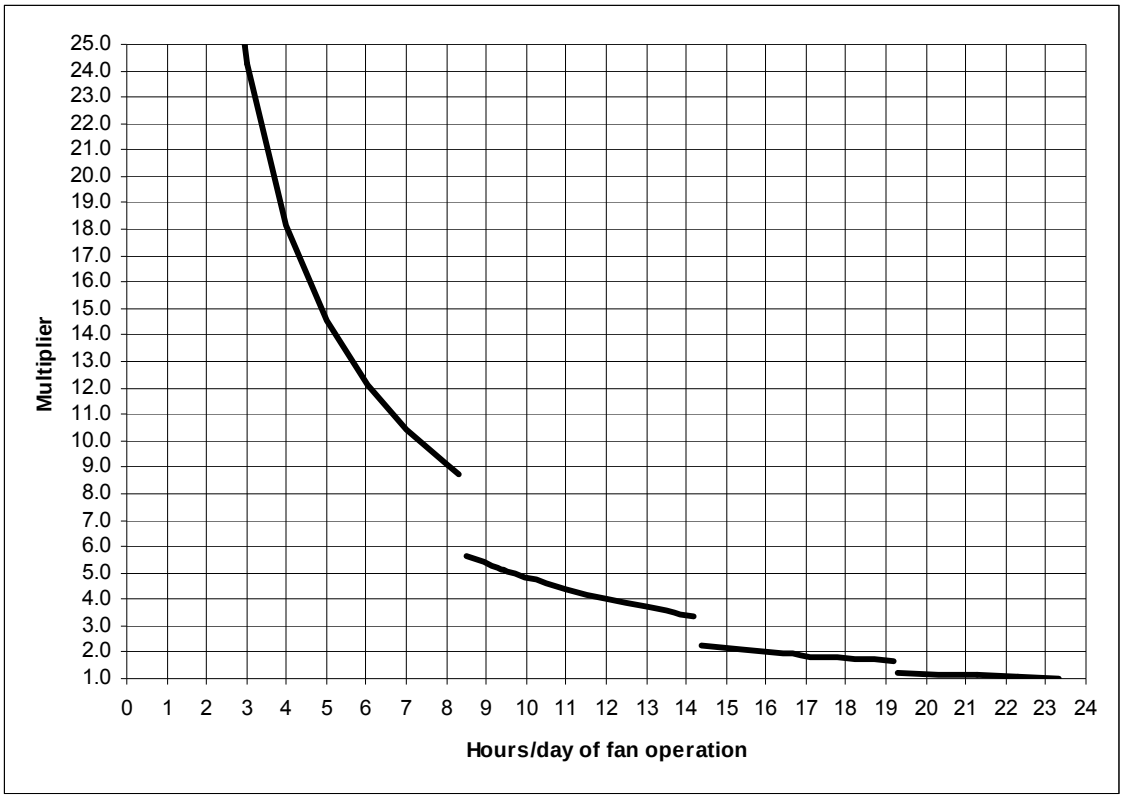

Figure 4-23 – Additional Air Flow for Intermittent Fan Operation

Equation 4-2

$Q_f = Q_r / (e \times f)$

Where

Q_f = fan flow rate
Q_r = ventilation air requirement (continuous)
e = ventilation effectiveness (from Table 4-8 below)
f = fractional on-time.

Table 4-8 – Ventilation Effectiveness for Intermittent Fans **Daily Fractional On time, f**	**Ventilation Effectiveness, e**
f ≤= 35%	0.33
35% <= f < 60%	0.50
60% ≤= f < 80%	0.75
80% ≤= f	1.0
Fan runs at least once every three hours	1.0

Intermittent ventilation systems have to be automatically controlled by a timer or other device that assures that they will operate the minimum amount of time needed to meet the ventilation requirement. The automatic controls shall make sure that the fan operates at least 1 hour in twelve.

Example 4-8 – Flowrate for Intermittent Fan

Question

The required ventilation rate is 60 cfm. If the ventilation fan runs 80 percent of the time, what must the airflow rate be?

Answer

Since f is 0.8 (80 percent), then the ventilation effectiveness, e, is 1. Q_f equals 60/(0.8 x 1) = 75 cfm. This is a fairly small increase in fan size.

Example 4-9

Question

For the same house, if the fan runs half the day (12 hours per day), what is the required airflow?

Answer

The fractional on-time is 0.5 (50 percent), so e is also 0.5 from Table 4-8. The fan size, Q_f = 60/(0.5 x 0.5) = 240 cfm. This is a much larger increase in fan size.

Example 4-10

Question

For an apartment, the flow required is 45 cfm. If the ventilation fan runs 20 minutes on and 10 minutes off, what is the required fan size?

Answer

Fractional on-time is 0.67 (67 percent). [f = on-time/total time = 20/(20 + 10)] Since the fan runs at least once every three hours, e is 1.0. The fan size, Q_f = 45/(0.67 x 1.0) = 67.5 cfm, which rounds to 68 cfm.

Example 4-11

Question

For the same apartment, if the fan runs 8 hours on and 4 hours off, what flow rate is required?

Answer

Fractional on-time is again 0.67 (67 percent, but now e is 0.75. Q_f = 45/(0.67 x 0.75) = 89.6 cfm, rounded to 90 cfm.

Example 4-12

Question

I have an electronic timer system. I would like to have the system run only 2 hours in the morning and 8 hours in the evening (6 a.m. – 8 a.m. and 4 p.m. to midnight). I can set the timer to operate the fan for 1 minute every hour. What flow rate do I need?

Answer

Forget about the 1 minute every hour. ASHRAE has issued an interpretation of the standard that says that operation such as you describe is not sufficient to use a ventilation effectiveness of 1. In this case, the fractional on-time is 0.42 (10 hours/24 hours), so ventilation effectiveness from Table 4-8 is 0.5. Q_f = 60 cfm/(0.42 x 0.5) = 286 cfm.

Control and Operation

From ASHRAE 62.2-2007

Section 4.3 Control and Operation

The "fan on" switch on a heating or air-conditioning system shall be permitted as an operational control for systems introducing ventilation air through a duct to the return side of an HVAC system. Readily accessible override control must be provided to the occupant. Local exhaust fan switches and "fan on" switches shall be permitted as override controls. Controls, including the "fan-on" switch of a conditioning system, must be appropriately labeled.

Exception to Section 4.3: An intermittently operating, whole-house mechanical ventilation system may be used if the ventilation rate is adjusted according to the exception to §4.4. The system must be designed so that it can operate automatically based on a timer. The intermittent mechanical ventilation system must operate at least one hour out of every twelve.

The Standards require that the ventilation system have an override control which is readily accessible to the occupants. The "fan-on" switch on a typical thermostat controlling the HVAC system and the wall switch for an exhaust fan are both allowed as acceptable controls. The control must be "readily accessible", e.g. it must be capable of being accessed quickly and easily without having to remove panels or doors. It can be as simple as a labeled wall switch by the electrical panel. It may be integrated in a labeled wall-mounted control or in the air moving device, but it cannot be buried in the insulation in the attic or the inside of the fan. The occupant must be able to modify the settings or override the system.

If intermittent fans are used, they must be controlled by a timer, and they must have an increased airflow rate to compensate for the off time.

Time-of-day timers or duty cycle timers can be used to provide intermittent whole-building ventilation. Manual crank timers cannot be used, since the system must operate automatically without intervention by the occupant. Some controls "look back" over a set time interval to see if the air handler has already operated for heating or cooling before it turns on the air handler for ventilation only operation.

Example 4-13 – Control Options

Question

I plan to use a bathroom exhaust fan to provide whole-building ventilation for a house. The fan is designed to be operated by a typical wall switch. Do I need to put a label on the wall plate to comply with the requirement that controls be "appropriately labeled"?

Answer

Yes. If the exhaust fan were serving only the local exhaust requirement for the bathroom, then a label would not be required. Since the fan is providing the required whole-building ventilation, a label is needed to inform the occupant that the fan should be operating whenever the home is occupied.

Example 4-14 – Thermostatic Control

Question

I plan to provide ventilation air by connecting a duct run from the return side of the central air handler to the outdoors. Ventilation will be provided whenever the air handler operates. According to my estimates, the system will run on calls for heating and cooling about 40 percent of the time, averaged over the year. If I provide a safety factor and assume that it only runs 25 percent of the time, and size the airflow accordingly, can I allow the system to run under thermostatic control?

Answer

No. A system under thermostatic control will go through periods with little or no operation when the outdoor temperature is near the indoor setpoint, or if the system is in setback mode. An intermittently operating ventilation system MUST be controlled by a timer in order to assure that adequate ventilation is provided regardless of outdoor conditions.

As mentioned in the text, there are timer based controls available that function to keep track of when (and for how long) the system operates to satisfy heating/cooling requirements in the home. These controls only turn on the central fan to provide additional ventilation air when heating/cooling operation of the central fan has not already operated enough to provide the required ventilation.

4.6.3 Whole-Building Mechanical Ventilation Energy Consumption

For builders using the performance compliance approach the energy use of fans (other than CFI fans) installed to meet the whole-building ventilation requirement is usually not an issue because the standard design W/CFM is set equal to the proposed design W/CFM up to an energy use level sufficient to accommodate most well designed ventilation systems. Also, the standard design whole-building ventilation system airflow rate is set equal to the proposed design whole-building ventilation system airflow rate so there is no energy penalty or credit for most systems. Systems that utilize Heat Recovery or Energy Recovery ventilators (HR/ERV) may need to account for the heat recovery benefit in the performance calculation to make up for their high energy use.

The energy use of the central air handler fan utilized for a CFI ventilation system must conform to the same fan Watt draw (W/CFM) limit as is the prescriptive requirement for cooling systems in climate zones 10-15. CFI systems are the only type of ventilation system that must meet a prescriptive fan Watt draw requirement that must be tested by the builder/installer, and verified by a HERS rater in accordance with the diagnostic test protocols given in RA3.3.

Energy use of fans installed for other purposes such as local exhaust is not regulated in the Standards.

Central Fan Integrated Ventilation Systems - Watt Draw

§151(f)11. Central Fan Integrated Ventilation Systems. Central forced air system fans used in central fan integrated ventilation systems shall demonstrate, in Air Distribution Mode, a watt draw less than 0.58 W/CFM.

CFI system automatic controls must operate the central system air handler fan (generally part of every hour of the year) in order to draw in and/or distribute ventilation air around the home even when there is no heating or cooling required. CFI systems generally do not operate continuously, thus do not meet the whole-building ventilation requirement as a “continuous" system. Because the CFI ventilation control increases the central system air handler fan run time significantly, and because typical central system air handler fan and duct systems require a large amount of power, a CFI ventilation system can use a very significant amount of electricity on an annual basis.

The 2008 update includes prescriptive standards for central system air handler fan Watt draw for cooling systems in the hottest California climates. The same prescriptive fan Watt draw requirement also applies to any central system air handler used for a CFI system installed in any California climate zone. Compliance with this requirement involves a post-construction measurement by the installing contractor of the airflow through the air handler cooling coil, and the simultaneous measurement of the Watt draw of the air handler fan motor. This fan Watt draw measurement must be verified by a HERS rater (see Reference Residential Appendix RA3.3). The central system air handler must be operating in ventilation mode (outdoor air damper is open and ventilation air is flowing into the return plenum from outside the building) and the airflow that must be measured is the total airflow through the air handler (cooling coil airflow), which is the sum of the return airflow, and the outside air ducted to the return plenum (ventilation airflow). To pass the test, the watt draw must be less than 0.58 W/CFM.

Builders who utilize CFI systems and comply using the performance approach have the option of accepting the default value for the central system fan Watt draw of 0.8 W/CFM (which does not require a post-construction measurement and HERS verification). Alternatively, the builder can specify a lower W/CFM value for compliance which must be tested and verified by a HERS rater. In either case the compliance software will check the furnace fan heating and cooling operation every hour, and if the air handler has not been operating for at least 20 minutes during that hour, the software will calculate energy use for operation in CFI mode until 20 minutes of fan operating occurs. The standard design ventilation energy consumption for that hour will be calculated as the extra fan run time at a Watt draw of 0.58 W/CFM. The proposed design ventilation energy for that hour will be calculated as the extra fan run time at the Watt draw that was specified for compliance, otherwise at the default Watt draw of 0.8 W/CFM.

Other Whole-Building Ventilation Systems – Watt Draw

There are no prescriptive requirements for maximum fan energy (Watt draw) for whole-building ventilation systems other than CFI systems.

Builders who specify other whole-building ventilation systems and comply using the performance approach have the option of accepting the default minimum whole-building ventilation airflow rate and a Watt draw value of 0.25 W/CFM which is typical of simple exhaust fans that meet the 1 Sone requirement. If the

builder installs a whole-building ventilation system that has a fan Watt draw specification greater than 1.2 W/CFM of ventilation airflow, then he must input the ventilation airflow (CFM) and Watt draw (W/CFM) corresponding to the system that he proposes to install. The compliance software will simulate whole-building ventilation using the builder's specified ventilation CFM and W/CFM for the proposed design. For the standard design the builders proposed CFM and 1.2 W/CFM will be used. If the builder specifies a system with heat recovery he inputs the recovery efficiency of his proposed system and the compliance software uses it in the proposed design to calculate the heating and cooling impact of the whole-building ventilation. Ventilation heat recovery is never used in the standard design.

4.6.4 Local Exhaust (Section 5 of ASHRAE 62.2)

Local exhaust (sometimes called spot ventilation) has long been required for bathrooms and kitchens to deal with moisture and odors at the source. Building codes have required an operable window or an exhaust fan in baths for many years and have generally required kitchen exhaust either directly through a fan or indirectly through a ventless range hood and an operable window. The 2008 Standards recognize the limitations of these indirect methods of providing ventilation to reduce moisture and odors and requires that these spaces be mechanically exhausted directly to outdoors even if windows are present. As we build tighter homes with more insulation, the relative humidity in the home has increased and the potential for condensation on cool or cold surfaces has increased as well. The presence of moisture condensation has been a leading cause of mold and mildew in both new and existing construction. The occurrence of asthma has also increased as the interior relative humidity has gotten higher. Therefore, it has become more important to remove the moisture from bathing and cooking right at the source.

The Standards require that each kitchen and bathroom have a local exhaust system installed. Generally this will be accomplished by installing a dedicated exhaust fan in each room that requires local exhaust, although ventilation systems that exhaust air from multiple rooms utilizing a duct system connected to a single ventilation fan are allowed as long as the minimum local ventilation airflow rate requirement is met in all rooms served by the system. The Standards define kitchens as any room containing cooking appliances, and bathrooms are rooms containing a bathtub, shower, spa, or other similar source of moisture. Note that a room containing only a toilet is not required by the Standards to have mechanical exhaust; it assumes that there will be an adjacent bathroom which will have local exhaust.

The Standards allow the designer to choose between intermittent operation or continuous operation for the local exhaust ventilation system. The ventilation rates are different because the ventilation effectiveness of an intermittent operation fan is different than the ventilation effectiveness of a continuous operation fan.

Building codes may require that fans used for kitchen range hood ventilation be safety-rated by UL or some other testing agency for the particular location and/or application. Typically, these requirements address the fire safety issues of fans placed within an area defined by a set of lines at 45° outward and upward from the cook top. Few "bath" fans will have this rating and cannot be used in this area of the kitchen ceiling.

Example 4-15 – Local Exhaust Required for Toilet

Question

I am building a house with 2½ baths. The half bath consists of a room with a toilet and sink. Is local exhaust required for the half bath?

Answer

No. Local exhaust is required only for bathrooms, which are defined by the Standards as rooms with a bathtub, shower, spa or some other similar source of moisture. This does not include a simple sink for occasional hand washing.

Example 4-16

Question

The master bath suite in a house has a bathroom with a shower, spa and sinks. The toilet is in a separate, adjacent room with a full door. Where do I need to install local exhaust fans?

Answer

The Standards only requires local exhaust in the bathroom, not the separate toilet room.

Intermittent Local Exhaust

The Standards requires that intermittent local exhaust fans be designed to be operated by the occupant. This usually means that a wall switch or some other type of control is accessible and obvious. There is no requirement to specify where the control or switch needs to be located, but bath fan controls are generally located next to the light switch, and range hood or downdraft fan controls are generally integrated into the range hood or mounted on the wall or counter adjacent to the range hood.

Bathrooms can use a variety of exhaust strategies. They can utilize typical ceiling bath fans or may utilize one or two pickups for remote inline or exterior-mounted fans or heat recovery products. Intermittent local exhaust can be integrated with the whole-building ventilation system to provide both functions. Kitchens can have range hoods, down-draft exhausts, ceiling fans, wall fans, or pickups for remote inline or exterior-mounted fans. Generally, HVR/ERV manufacturers will not allow kitchen pickups to avoid the issue of grease buildup in the heat exchange core. Building codes typically require that the kitchen exhaust must be exhausted through metal ductwork for fire safety.

Example 4-17 – Ducting Kitchen Exhaust to the Outdoors

Question

How do I know what kind of duct I need to use. I've been using recirculating hoods my entire career, now I need to vent to outdoors. How do I do it?

Answer

Kitchen range hood or downdraft duct is generally smooth metal duct that is sized to match the outlet of the ventilation device. It is often six inch or seven inch round duct or the range hood may have a rectangular discharge. If it is rectangular, the fan will typically have a rectangular-to-round adapter included. Always use a terminal device on the roof or wall that is sized to be at least as large as the duct. Try to minimize the number of elbows used.

Example 4-18

Question

How do I know what the requirements are in my area?

Answer

Ask your enforcement agency for that information. Some enforcement agencies will accept metal flex, some will not.

Control and Operation for Intermittent Local Exhaust

The choice of control is left to the designer. It can be an automatic control like an occupancy sensor or a manual switch. Some products have multiple speeds and some switches have a delay-off function that continues the exhaust fan flow for a set time after the occupant leaves the bathroom. New control strategies continue to come to the market. The only requirement is that there is a control.

Ventilation Rate for Intermittent Local Exhaust

A minimum intermittent ventilation airflow of 100 cfm is required for the kitchen range hood and a minimum intermittent ventilation airflow of 50 cfm is required for the bath fan.

The 100 cfm requirement for the range hood or microwave/hood combination is the minimum to adequately capture the moisture and other products of cooking and/or combustion. The kitchen exhaust requirement can also be met with either a ceiling or wall-mounted exhaust fan or with a ducted fan or ducted ventilation system that provides at least 5 air changes of the kitchen volume per hour. Recirculating range hoods that do not exhaust pollutants to the outside cannot be used to meet the requirements of the ASHRAE Standard 62.2.

Most range hoods provide more than one speed, with the high speed at 150 cfm or more – sometimes much more. Range hoods are available that are rated for 1,000 or 1,500 cfm on high speed and are often specified when large commercial-style stoves are installed. Care must be taken to avoid backdrafting combustion appliances when large range hoods are used. Refer to Table 5.1 in ASHRAE 62.2 for intermittent local ventilation exhaust airflow rates.

Example 4-19 – Is an Intermittent Range Hood Required?

Question

I am building a house with a kitchen that is 12 ft x 14 ft with a 10 ft ceiling. What size ceiling exhaust fan is required?

Answer

The kitchen volume is 12 ft x 14 ft x 10 ft = 1680 ft^3. 5 air changes is a flowrate of 1680 ft^3 x 5/ hr ÷ 60 min/hr = 140 cfm. So this kitchen must have a ceiling or wall exhaust fan of 140 cfm or a 100 cfm vented range hood.

Continuous Local Exhaust

The Standards allow the designer to install a local exhaust system that operates without occupant intervention continuously and automatically during all occupiable hours. Continuous local exhaust is generally specified when the local exhaust ventilation system is combined with a continuous whole-building ventilation system. For example, if the whole-building exhaust is provided by a continuously operating exhaust fan located in the bathroom, this fan satisfies the local exhaust requirement for the bathroom. The continuous local exhaust may also be part of the continuous whole-building ventilation system, such as a pickup for a remote fan or HRV/ERV system.

Continuously operating bathroom fans must operate at a minimum of 20 cfm and continuously operating kitchen fans must operate at 5 air changes per hour. Note: these continuous ventilation airflow rates are different than the ventilation airflow rates required for intermittent local exhaust. Refer to Table 5.2 in ASHRAE 62.2 for continuous local ventilation exhaust airflow rates.

The requirement that continuous kitchen exhaust fans must provide 5 air changes per hour is due to the difficulty of a central exhaust to adequately remove contaminants released during cooking from kitchens that may be quite large, have an open-plan design, or have high ceilings. The only way to avoid a vented kitchen hood is to provide more than 5 air changes per hour of constant local exhaust ventilation.

Example 4-20 – Continuous Kitchen Exhaust

Question

The kitchen in an apartment is 5 ft. by 10 ft., with an 8 ft ceiling. If a continuous ceiling-mounted exhaust fan is used, what must the airflow be?

Answer

The kitchen volume is 5 ft x 10 ft x 8 ft = 400 ft^3. 5 air changes equates to 400 ft^3 x 5/hr ÷ 60 min/hr = 34 cfm.

Example 4-21

Question

A new house has an open-design 12 ftx18 ft ranch kitchen with 12 ft cathedral ceilings. What airflow rate will be required for a continuous exhaust fan?

Answer: The kitchen volume is 12 ft x 18 ft x 12 ft = 2592 ft^3. The airflow required is 2592 ft^3 x 5/hr ÷ 60 min/hr = 216 cfm.

4.6.5 Other Requirements (Section 6 of ASHRAE 62.2)

Transfer Air

From ASHRAE 62.2-2007

6.1 Transfer Air

Dwelling units shall be designed and constructed to provide ventilation air directly from the outdoors and not as transfer air from adjacent dwelling units or other spaces, such as garages, unconditioned crawl spaces, or unconditioned attics. Measures shall be taken to prevent air movement across envelope components separating attached, adjacent dwelling units, and between dwelling units and other spaces, both vertically and horizontally. Measures shall include sealing of common envelope components, pressure management, and use of airtight recessed lighting fixtures.

ASHRAE Standard 62.2 requires that the air used for ventilation purposes come from the outdoors. Air may not be drawn in as transfer air from other spaces that are outside the occupiable space of the dwelling unit. This is to prevent airborne pollutants originating in those other spaces from contaminating the dwelling unit. For example, drawing ventilation air from the garage could introduce VOCs, or pesticides into the indoor air. Drawing ventilation air from an unconditioned crawlspace could cause elevated allergen concentrations in the dwelling such as mold spores, insects or rodent allergens. Likewise, drawing air from an adjacent dwelling could introduce unwanted contaminants such as cooking products or cigarette smoke.

In addition to designing the ventilation system to draw air from the outdoors, the standard also requires that measures be taken to prevent air movement between adjacent dwelling units and between the dwelling unit and other adjacent spaces, such as garages. The measures can include air sealing of envelope components, pressure management and use of airtight recessed light fixtures. The measures must apply to adjacent units both above and below, as well as side by side.

Air sealing must include pathways in vertical components such as party walls and walls common to the unit and an attached garage; and in horizontal components such as floors and ceilings. Pipe and electrical penetrations are examples of pathways that require sealing.

Section 6.1 of ASHRAE 62.2 does not prohibit whole-building exhaust or local exhaust ventilation systems, and does not require mechanical systems to maintain pressure relationships with adjacent spaces except as required by Section 6.4 of ASHRAE 62.2.

Instructions and Labeling

From ASHRAE 62.2-2007

6.2 Instructions and Labeling

Information on the ventilation design and/or ventilation systems installed, instructions on their proper operation to meet the requirements of this standard, and instructions detailing any required maintenance (similar to that provided for HVAC systems) shall be provided to the owner and the occupant of the dwelling unit. Controls shall be labeled as to their function (unless that function is obvious, such as toilet exhaust fan switches).

There has been a history of ventilation systems that worked initially but failed due to lack of information for the occupant or lack of maintenance. So ASHRAE Standard 62.2 requires that the installer or builder provide written information on the basic ventilation concept being used and the expected performance of the system. These instructions must include how to operate the system and what maintenance is required.

Because the concept of a designed whole-building ventilation system may be new to a lot of occupants, the standard requires that ventilation system controls be labeled as to their function. No specific wording is mandated, but the wording needs to make clear what the control is for and the importance of operating the system. This may be as simple as “Ventilation Control” or might include wording such as “Operate whenever the house is in use” or “Keep on except when gone over 7 days”. If the system is designed to operate with a timer as an intermittent system, the labeling may need to be more complex. One acceptable option is to affix a label to the electrical panel that provides some basic system operation information.

Clothes Dryers

From ASHRAE 62.2-2007

6.3 Clothes Dryers

Clothes dryers shall be exhausted directly to the outdoors.

All laundry rooms must be built with a duct to the outdoors, designed to be connected to the dryer. Devices which allow the exhaust air to be diverted into the indoor space to provide extra heating are not permitted. This requirement is consistent with existing clothes dryer installation and design standards.

In multi-family buildings, multiple dryer exhaust ducts can be connected to a common exhaust only when dampers are provided to prevent recirculation of exhaust air from one apartment to another.

Example 4-22 – Clothes Dryer Exhaust Diverter

Question

I am building a home which has been purchased prior to completion. The buyer has asked for an exhaust air diverter to be installed in the dryer exhaust duct. He says that it is wasteful of heating energy to exhaust the warm humid air to the outdoors during the winter when the furnace and humidifier are working. He says that the screen on the diverter will prevent excess dust being released into the space. Can I install the device for him?

Answer

If you do, you will not comply with the Standards. The device is specifically prohibited. Significant amounts of dust are released from such devices, and the moisture in the dryer exhaust can lead to humidity problems as well, particularly in warmer climates.

Combustion and Solid-Fuel Burning Appliances

From ASHRAE 62.2-2007

6.4 Combustion and Solid-Fuel Burning Appliances

Combustion and solid-fuel burning appliances must be provided with adequate combustion and ventilation air and vented in accordance with manufacturer's installation instructions, NFPA 54-2002/ANSI Z223.1-2002, National Fuel Gas Code, NFPA 31-2001, Standard for the Installation of Oil-Burning Equipment, or NFPA 211-2000, Standard for Chimneys, Fireplaces, Vents, and Solid-Fuel Burning Appliances, or other equivalent code acceptable to the building official.

Where atmospherically vented combustion appliances or solid-fuel burning appliances are located inside the pressure boundary, the total net exhaust flow of the two largest exhaust fans (not including a summer cooling fan intended to be operated only when windows or other air inlets are open) shall not exceed 15 cfm/100 ft² of occupiable space when in operation at full capacity. If the designed total net flow exceeds this limit, the net exhaust flow must be reduced by reducing the exhaust flow or providing compensating outdoor airflow. Atmospherically vented combustion appliances do not include direct-vent appliances.

ASHRAE Standard 62.2 requires that the vent system for combustion appliances be properly installed, as specified by the instructions from the appliance manufacturer and by the California Building Code. Compliance with the venting requirements will involve determining the type of vent material to be used, the sizing of the vent system, and vent routing requirements.

ASHRAE Standard 62.2 includes a provision intended to prevent backdrafting where one or more large exhaust fans are installed in a home with atmospherically vented or solid fuel appliances. If the two largest exhaust fans have a combined capacity that exceeds 15 cfm/100 ft² of floor area, then an electrically interlocked makeup air fan must be installed so that the net exhaust is less than 15 cfm/100 ft² with either or both fans operating. This provision applies only when the atmospherically vented appliance is inside the pressure boundary of the house, and does not include a summer cooling fan which is designed to be operated with the windows open. Direct-vent appliances are not considered "atmospherically vented."

The 2 largest exhaust fans are normally the kitchen range hood and the clothes dryer (if located inside the dwelling unit pressure boundary). Many large range hoods, particularly down draft range hoods, have capacities of 1,000 cfm or more.

A problem with this requirement can be solved in one of three ways. First, all atmospherically vented combustion appliances can be moved outside the pressure boundary of the house (to the garage or other similar space). Second, the flowrate of one or more of the fans can be reduced so that the combined flow is less than 15 cfm/100 ft². Finally, a supply fan can be installed to balance the flow.

Example 4-23 – Large Exhaust Fan

Question

I am building a 3,600 ft^2 custom home that has 4 bedrooms. The kitchen will have a high end range hood that has three speeds, nominally 1000 cfm, 1400 cfm and 1600 cfm. The house will be heated with a gas furnace located in the basement. If I am using a central exhaust fan for the whole-building ventilation of 90 cfm, and there is a clothes dryer installed, how large does my compensating supply fan need to be?

Answer

You must use the high speed value for the range hood of 1600 cfm. The clothes dryer will have a flow that is assumed to be 150 cfm for sizing purposes. These two flows must be added together for a total exhaust capacity of 1750 cfm. Since the whole-building ventilation fan is not one of the two largest exhaust fans, it does not figure into sizing the supply fan. Using the equation above, the supply fan must be at least 1750 cfm – 15 cfm x 3600 ft² / 100 ft² = 1210 cfm.

Example 4-24

Question

The same custom house will have the furnace located in the garage instead of the basement. Does that change anything?

Answer

The garage and the attic would both normally be considered outside the pressure boundary, so no compensating fan would be required. An exception to this would be if the attic is specially designed to be inside the pressure boundary, then the answer would be the same as for Example 4-23.

Example 4-25

Question

For this house, I need to keep the furnace in the basement. What are my options that would avoid using the compensating supply fan?

Answer

There are several things you could do. First, you could use direct vent appliances which would give higher efficiency and would not require a supply fan. You could use a lower capacity range hood, one that is less than 390 cfm (15 cfm x 3600 ft² / 100 ft² – 150 cfm). Use of supply-only

whole-building ventilation would allow the hood capacity to increase to 480 cfm (15 cfm x 3600 ft² / 100 ft² – 150 cfm + 90 cfm). There are also range hoods available in the commercial market that have integrated supply fans (or makeup air).One of these units would be acceptable too.

Garages

From ASHRAE 62.2-2007

6.5 Garages

When an occupiable space adjoins a garage, the design must prevent migration of contaminants to the adjoining occupiable space. Doors between garages and occupiable spaces shall be gasketed or made substantially airtight with weather stripping. HVAC systems that include air handlers or return ducts located in garages shall have total air leakage of no more than 6% of total fan flow when measured at 0.1 inch w.c. (25 Pa).

Garages often contain numerous sources of contaminants. These include gasoline and exhaust from vehicles, pesticides, paints and solvents, etc. The Standards require that when garages are attached to the house, these contaminants be prevented from entering the house. The wall between the unit and garage (or garage ceiling in designs with living space above garages) shall be designed and constructed so that no air migrates through the wall or ceiling. The common doors and any air handlers or ducts located in the garage shall also be sealed, weatherstripped or gasketed. Use of an exterior door system would address this requirement.

If an air handling unit (furnace) is located in the garage, or return ducts are located in the garage (regardless of the air handler location) the entire duct system must meet the sealed and tested ducts criteria.

Example 4-26 – Garages

Question

The building designer located the air handler in the garage. The main return trunk from the dwelling is connected to the air handler. Is this acceptable?

Answer

Yes, provided that the duct system is leak tested at 25 Pa. and sealed, if necessary, to have leakage no greater than 6 percent of the total fan flow.

Example 4-27

Question

The building designer located the air handler in the dwelling unit. A return duct runs through the garage to a bedroom above the garage. The duct has only 4 ft of length in the garage. How do I test that length of the duct?

Answer

This design is allowed but the entire duct system must be leak tested at 25 Pa. and sealed, if necessary, to have leakage no greater than 6 percent of the total fan flow. There is no test available to leak test only the garage portion of the duct system.

Ventilation Opening Area

From ASHRAE 62.2-2007

6.6 Ventilation Opening Area

Spaces shall have ventilation openings as listed below. Such openings shall meet the requirements of Section 6.8.

Exception: Spaces that meet the local ventilation requirements set for bathrooms in Section 5.

6.6.1 Habitable Spaces

Each habitable space shall be provided with ventilation openings with an openable area not less than 4% of the floor area, nor less than 5 ft².

6.6.2 Toilets and Utility Rooms

Toilets and utility rooms shall be provided with ventilation openings with an openable area not less than 4% of the room floor area, nor less than 1.5 ft².

Exceptions: (1) Utility rooms with a dryer exhaust duct; (2) toilet compartments in bathrooms.

The whole-building mechanical ventilation is intended to provide adequate ventilation to typical new homes under normal circumstances. On occasion, however, houses experience unusual circumstances where high levels of contaminants are released into the space. When this occurs, some means of providing the significantly higher levels of ventilation required to remove the contaminants is needed. Operable windows are the most likely means of providing the additional ventilation.

This section of ASHRAE Standard 62.2 requires ventilation openings in habitable spaces, toilets and utility rooms. Ventilation openings usually means operable windows, although a dedicated non-window opening for ventilation is acceptable. Spaces that meet the local exhaust requirements are exempted from this requirement.

Habitable Spaces

Habitable spaces are required to have ventilation openings with openable area equal to at least 4 percent of the space floor area (but not less than 5 ft^2). Rooms people occupy are considered habitable space. Dining rooms, living rooms, family rooms, bedrooms and kitchens are considered habitable space. Closets, crawl spaces, garages and utility rooms are generally not. If the washer and dryer are located in an open basement that is also the family room, it would be considered habitable space.

The openings do not have to be provided by windows. They can also be provided by operable, insulated, weather-stripped panels.

Ventilation openings, which include windows, skylights, through-the-wall inlets, window air inlets, or similar devices, shall be readily accessible to the occupant. This means that the occupant must be able to operate the opening without having to climb on anything. An operable skylight must have some means of being operated while standing on the floor: a push rod, a long crank handle, or an electric motor.

If a ventilation opening is covered with louvers or otherwise obstructed, the openable area is the unobstructed free area through the opening.

Example 4-28 – Ventilation Openings

Question

I am building a house with a 14 ft. by 12 ft. bedroom. What size window do I need to install?

Answer

It depends on the type of window. The standard requires that the openable area of the window, not the window unit, be 4 percent of the floor area, or 14 ft x 12 ft' x 0.04 = 6.7 ft². The fully opened area of the window or windows must be greater than 6.7 ft^2. The requirement for this example can be met using two double hung windows each with a fully opened area of 3.35 ft^2. Any combination of windows whose opened areas add up to at least 6.7 ft^2 will meet the requirement.

Example 4-29 – Ventilation Opening Louvers

Question

There are fixed wooden louvers over a window in a bedroom. The louvers have slats that are 1/8 in thick, and they are spaced 1 inch apart. What is the reduction in openable area?

Answer

Assuming that the 1 inch spacing was measured perpendicular to the slats (the correct way), then the reduction is the slat thickness divided by the spacing, or 1/8 inch. So the credited opening area is the original opening area x (1 inch – 1/8 inch)/1 inch = 7/8 inch of the original opening area.

Minimum Filtration

From ASHRAE 62.2-2007

6.7 Minimum Filtration

Mechanical systems that supply air to an occupiable space through ductwork exceeding 10 ft in length and through a thermal conditioning component, except evaporative coolers, shall be provided with a filter having a designated minimum efficiency of MERV 6, or better, when tested in accordance with ANSI/ASHRAE Standard 52.2-1999, Method of Testing General Ventilation Air-Cleaning Devices for Removal Efficiency by Particle Size. The system shall be designed such that all recirculated and mechanically supplied outdoor air is filtered before passing through the thermal conditioning components. The filter shall be located and installed in such a manner as to facilitate access and regular service by the owner. The filter shall be selected and sized to operate at a clean pressure drop no greater than 0.1 in. w.c. unless the equipment is designed or selected to accommodate any additional pressure drop imposed by the filter selection.

ASHRAE Standard 62.2 requires that particulate air filtration of no less than MERV 6 efficiency is installed in any HVAC system having more than 10 ft of ductwork. The particulate filter must be installed such that all of the air circulated through the furnace or air handler is filtered prior to passing through the thermal conditioning portion of the system. In addition, the standard requires that the filter be located and installed for easy access and service by the homeowner. Lastly, the standard requires that the filter cartridge be sized to operate at no greater than 0.1 inch water column when clean, or that the air handler be selected to handle greater pressure loss without undue restriction on airflow.

Many residential units have factory installed filter cartridges that comply with this minimum filtration requirement. These are normally 1-inch thick with a pleated media configuration to attain the proper efficiency and airflow performance. If the filter bank is to be field installed, the sizing selection is critical to HVAC system performance.

The filter retainer section must be easily accessible by the homeowner to assure continued monitoring and replacement. The filter bank may be located in the air handler/furnace (1); in the return air plenum near the air handler (2a); in the return air plenum with a deep pleat cartridge (2b); angled across the return air plenum to enhance cross-section (3); or situated in a wall return grille (4). See Figure 4-24.

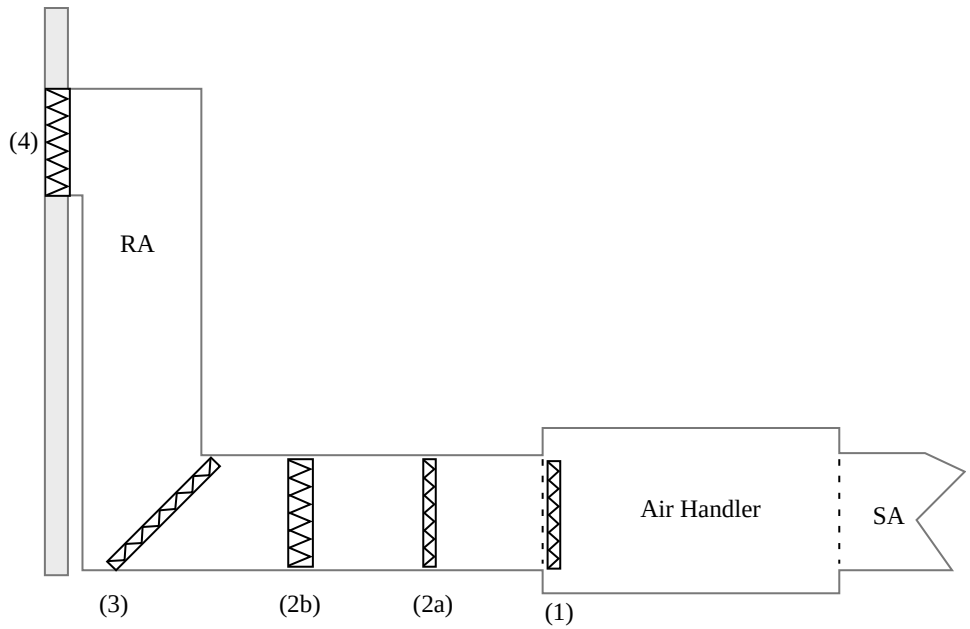

Figure 4-24 – Filter Location Options

The MERV 6 pleated filter provides enhanced particulate arrestance, but also provides longer service life than the conventional low efficiency panel filter. Typically, the pleated type filter will last 3 months or longer, depending upon operating conditions, as compared to the typical 1 month life cycle of disposable fiberglass filters. The deeper pleated versions will typically provide even longer life cycles, up to 1 year or more.

Example 4-30 – Filter Sizing

Question

I am installing a 1200 cfm furnace in a new house. It has a 20 inches x 20 inches filter furnished and installed in the unit. Is this in compliance?

Answer

Yes, you may assume that the equipment manufacturer has selected a compliant filter efficiency and pressure drop to match the features of their air handler.

Example 4-31

Question

What if the above unit has no filter installed but recommends a 20 inches x 20 inches filter size? What filter do I select?

Answer

A number of manufacturers produce a 1-inch deep MERV 6 for use in slide-in tracks and return air grills. If the pressure drop information is not furnished with the filter to assist with the selection, oversize the filter by at least one size multiple beyond the normal recommendation of the manufacturer. In this case, a filter selection of 20 inches" x 25 inches to over-size the filter would reduce the face velocity by 25 percent, which in turn reduces the initial pressure drop by almost 50 percent.

Example 4-32

Question

For the same 1200 cfm furnace, what other options do I have?

Answer

For any filter, the pressure drop, efficiency, and life cycle can all be affected by velocity control. By enlarging the filter cartridge size, the approach velocity is decreased along with the pressure drop. If the depth of the filter is increased, likewise the air velocity through the media is decreased, and that, in turn, substantially reduces the actual pressure drop. Doubling the pleat depth will halve the velocity through the media and decrease pressure drop by up to 75 percent.

Example 4-33

Question

I am installing an HVAC system with the filter to be installed at the return air grill. What should I do to accommodate a 1inch pleated MERV 6 filter?

Answer

You can reduce the face velocity and related pressure drop by employing multiple return air grilles. By doubling or tripling the return air filter surface area, the pressure drop is reduced by 75 percent or greater. Alternatively, you can increase the size of the return air grill similar to what was discussed in Example 4-31, above, or increase the depth of the filter as discussed in Example 4-32

Example 4-34

Question

I am installing a ductless split system in a space that is being added on to the house. Must I use the designated MERV 6 filter?

Answer

No, the requirement does not apply since there is no ductwork attached to the unit.

Example 4-35

Question

My builder supply house has only MERV 8 or greater efficiency filters. Is this in compliance?

Answer

Yes, this is a better efficiency. However, higher MERV filters usually have higher pressure drop. Make sure that the pressure drop does not exceed the MERV 6 specified performance level and adjust the size and related air velocity accordingly.

Air Inlets

From ASHRAE 62.2-2007

Section 6.8 Air Inlets

Air inlets that are part of the ventilation design shall be located a minimum of 10 ft from known sources of contamination such as a stack, vent, exhaust hood, or vehicle exhaust. The intake shall be placed so that entering air is not obstructed by snow, plantings, or other material. Forced air inlets shall be provided with rodent/insect screen [mesh not larger than 1/2 inch].

Exceptions:

(a) Ventilation openings in the wall may be as close as a stretched-string distance of 3 ft from sources of contamination exiting through the roof or dryer exhausts.

(b) No minimum separation distance shall be required between windows and local exhaust outlets in kitchens and bathrooms.

(c) Vent terminations covered by and meeting the requirements of the National Fuel Gas Code (NFPA 54-2002/ANSI Z223.1-2002, National Fuel Gas Code) or equivalent.

When the ventilation system is designed with air inlets, the inlets must be located away from locations that can be expected to be sources of contamination. The minimum separation is 10 ft. Inlets include not only inlets to ducts, but windows which are needed to the opening area.

The Standards list some likely sources of contaminants. For typical residential applications, the sources will include:

- Vents from combustion appliances
- Chimneys
- Exhaust fan outlets
- Barbeque grills
- Locations where vehicles may be idling for any significant length of time
- Any other locations where contaminants will be generated

The Standards also require that air intakes be placed so that they will not become obstructed by snow, plants, or other material. Forced air inlets must also be equipped with insect/rodent screens, where the mesh is no larger than 1/2 inch.

There are three exceptions to the separation requirements.

1. Windows or ventilation openings in the wall can be as close as three feet to sources of contamination which exit through the roof or to dryer exhausts.
2. There is no minimum distance between windows and the outlet of a local exhaust outlet from kitchens or bathrooms.

3. Vent terminations which meet the requirements of the National Fuel Gas Code, which has its own separation and location requirements, do not need to meet the requirements.

4.6.6 Air Moving Equipment (Section 7 of ASHRAE 62.2)

From ASHRAE 62.2-2007

Section 7.1 Selection and Installation

Ventilation devices and equipment shall be tested and rated in accordance with the airflow and sound rating procedures of the Home Ventilating Institute (HVI 915-06, HVI Loudness Testing and Rating Procedure, HVI 916-05, HVI Airflow Test Procedure, and HVI 920-05, HVI Product Performance Certification Procedure). Installations of systems or equipment shall be carried out in accordance with manufacturers' design requirements and installation instructions.

Equipment used to meet the whole-building ventilation requirements or the local ventilation exhaust requirements shall be rated to deliver the required airflow, and shall have sound ratings that meet the requirements of this section.

Selection and Installation

ASHRAE Standard 62.2 requires that equipment used to comply with the standard be selected based on tested and certified ratings of performance for airflow and sound. When selecting fans for use in meeting the requirements of the standard, you must check the Home Ventilating Institute (HVI) certified products directory to confirm that the equipment you select has been tested, and the rated performance meets the requirements. The HVI-Certified Products Directory can be viewed at the following link:

www.hvi.org/resourcelibrary/proddirectory.html

In addition, the Standard requires that the fans be installed in accordance with the manufacturer's instructions. You must review the installation instructions and other literature shipped with the fan, and make sure that the installation complies with those instructions.

Sound Ratings for Fans

From ASHRAE 62.2-2007

Section 7.2 Sound Ratings for Fans)

Ventilation fans shall be rated for sound at no less than the minimum airflow rate required by this standard, as noted below.

Section 7.2.1 Continuous Ventilation Fans.

These fans shall be rated for sound at a maximum of 1.0 sone.

Section 7.2.2 Intermittent Fans.

These fans shall be rated for sound at a maximum of 3 sone, unless their maximum rated airflow exceeds 400 cfm (200 L/s).

Exception to Section 7.2: HVAC air handlers and remote-mounted fans need not meet sound requirements. To be considered for this exception, a remote-mounted fan must be mounted outside the habitable spaces, bathrooms, toilets, and hallways, and there must be at least 4 ft (1 m) of ductwork between the fan and the intake grille.

One common reason for not using ventilation equipment, particularly local exhaust fans, is the noise they create. To address this, ASHRAE Standard 62.2 requires that certain fans be rated for sound, and that installed fans shall have ratings below specified limits. The sound rating must be done at an airflow that is no less than the airflow that the fan must provide to meet the ventilation airflow requirement.

Because of the variables in length and type of duct and grille, there is no clearly repeatable way to specify a sound level for ventilation devices that are not mounted in the ceiling or wall surface. Consequently, air handlers, HRV/ERVs, inline fans and remote fans are exempted from the sound rating requirements that apply to surface-mounted fans. However, to reduce the amount of fan and/or motor noise that could come down the duct to the grille, the Standards sets a minimum of 4 ft of ductwork between the grille and the ventilation device. This may still produce an undesirable amount of noise for the occupant, especially if hard metal duct is used. Flexible insulated duct or a sound attenuator to will reduce the transmitted sound into the space.

Continuous Ventilation Fans (surface mounted fans)

Continuously operated fans shall be rated at 1.0 sone or less. This 1.0 sone requirement applies to continuous whole-building ventilation fans, and also to continuous local ventilation exhaust fans.

Intermittent Fans (surface mounted fans)

Intermittently operated whole-building ventilation fans shall be rated at a maximum of 1.0 sone. Intermittently operated local exhaust fans shall be rated at a maximum of 3.0 sone, unless the maximum rated airflow is greater than 400 cfm.

Thus, ASHRAE Standard 62.2 extends the requirement for quiet fans to include range hoods and regular bath fans, not just whole-building ventilation system fans. The whole-building fan or other combined systems that operate continuously to provide whole-building ventilation must be rated at 1.0 sone or less, but intermittent local ventilation exhaust fans, including intermittently operated bath fans, must be rated at a maximum of 3.0 sones. Range hoods must also be rated at 3.0 sones or less, but this is at their required “working speed” of 100 cfm. Most

range hoods have maximum speeds of much more than 100 cfm, but 100 cfm is the minimum airflow that is required by the Standards.

Airflow Rating

From ASHRAE 62.2-2007

Section 7.3 Airflow Rating

The airflows required by this standard refer to the delivered airflow of the system as installed and tested using a flow hood, flow grid, or other airflow measuring device. Alternatively, the airflow rating at a pressure of 0.25 in. w.c. may be used, provided the duct sizing meets the prescriptive requirements of Table 7.1 or manufacturers' design criteria.

Compliance with the ventilation airflow requirements for a ventilation system can be demonstrated in one of two ways:

1. The ventilation system can be tested using an airflow measuring device after completion of the installation to confirm that the delivered ventilation airflow meets the requirement. The builder/installer must also list the result of the airflow measurement(s) for the ventilation fan(s) on the Installation Certificate (CF-6R-MECH-05) for the building. The ventilation airflow must be measured and reported for any/all ventilation system types installed in the building, except for those described in item 2 below.
2. Simple exhaust systems can comply by performing and documenting an inspection of the installation to verify conformance to a prescriptive requirement that the fan has a certified airflow rating that meets or exceeds the required ventilation airflow, and the ducts for the ventilation system meet either the fan manufacturers published duct design specifications, or the prescriptive duct design requirements given in Table 4-9 below (Table 7.1 of ASHRAE 62.2). The builder/installer must also list the description of the installed fan equipment and duct design criteria for the ventilation fan(s) on the Installation Certificate (CF-6R-MECH-05) for the building.

   The fan's certified airflow rating must be based on tested performance at the 0.25 inch w.c. operating point. The certified airflow rating of a ventilation device is generally available from the manufacturer, and is also available for hundreds of products in the Home Ventilating Institute (HVI) Certified Products Directory at the HVI website (www.hvi.org). Manufacturers can choose whether to provide the certified data for posting at the HVI website, but all of them should have available the rated data at 0.25 inches of water column static pressure.

   If the manufacturer's duct system design specifications are utilized for compliance, the enforcement agency may require that the manufacturer's published system design documentation be provided for use in inspection of the installation(s).

   The prescriptive duct design criteria given in Table 4-9 provide maximum duct lengths based on various duct diameters and duct type. As can be seen, the higher the flow, the larger in diameter or shorter in length the duct has to be. Also note that smooth duct can be used to manage longer duct runs. Interpolation and extrapolation of table 4-9 (Table 7.1 of

ASHRAE 62.2) is not allowed. For airflow values not listed, use the next higher value. The table is not applicable for systems with airflow greater than 125 cfm at 0.25 inches of water column static pressure.

Table 4-9 – Prescriptive Duct Sizing for Single Fan Exhaust Systems (from 62.2, Table 7.1)

Duct Type	**Flex Duct**				**Smooth Duct**			
Fan Rating (cfm@ 0.25 in. w.c.)	50	80	100	125	50	80	100	125
Diameter inch	Maximum Length ft.							
3	X	X	X	X	5	X	X	X
4	70	3	X	X	105	35	5	X
5	NL	70	35	20	NL	135	85	55
6	NL	NL	125	95	NL	NL	NL	145
7 and above	NL	NL	NL	NL	NL	NL	NL	NL

This table assumes no elbows. Deduct 15 feet of allowable duct length for each elbow.
NL = no limit on duct length of this size.
X = not allowed, any length of duct of this size with assumed turns and fitting will exceed the rated pressure drop.

Example 4-36 – Prescriptive Duct Sizing

Question

I need to provide 75 cfm of continuous ventilation, which I plan to do using a central exhaust fan. I plan to connect the fan to a roof vent termination using flex duct. The duct will be about 8 ft long, with no real elbows, but some slight bends in the duct. What size duct do I need to use?

Answer

From Table 4-9, using the 80 cfm, flex duct column, we find that the maximum length with 4 inch duct is 3 ft, so you cannot use 4 inches duct. With 5 inch duct the maximum length is 70 ft, so that will clearly be adequate. Even if the bend in the duct is treated as an elbow, the allowable length only drops to 55 ft, more than adequate for the 8 ft required.

Example 4-37

Question

For the situation in example 4-36, again providing 75 cfm, what size duct would I need if smooth metal duct were used? In this case the total length would increase to about 10 ft, and there would be 2 elbows.

Answer

Using the 80 cfm, smooth duct column of Table 4-9, we find that the maximum length of 4 inches duct is 35 ft. Subtracting 15 ft for each of the 2 elbows leaves us with 5 ft, which is not long enough. With 5 inch duct the maximum length is 135 ft. Subtracting 15 ft for each of the 2 elbows leaves us with 105 ft, so that will clearly be adequate.

Example 4-38

Question

I will need a 100 cfm range hood. I have two possible duct routings. One is 15 ft long and will require 3 elbows. The other is 35 ft long but only requires one elbow. What size flex duct do I need to use?

Answer

First, let's take the 2 routings and add in the correction for the elbows. Elbow corrections can be either added to the desired length or subtracted from the allowable length. In this case, we know the desired length, so we'll add the elbows. We get 15 ft plus 3 times 15 ft for a total of 60 ft, or 35 ft plus 15 ft equals 50 ft.

Looking at Table 4-9, in the 100 cfm, flex duct column, we find that the maximum length with 5 inches duct is 35 ft, which is less than the adjusted length for either routing. With 6 inches duct, the maximum length is 125 ft, longer than either adjusted length. 6 inch duct would need to be used for either routing. *Note:* The building code may not allow flex duct to be used for the range hood, in which case smooth duct would be required. For smooth duct, 5 inches would be acceptable.

Multi-Branch Exhaust Ducting

From ASHRAE 62.2-2007

Section 7.4 Multi-Branch Exhaust Ducting (62.2 text)

If more than one of the exhaust fans in a dwelling unit shares a common exhaust duct, each fan shall be equipped with a back-draft damper to prevent the recirculation of exhaust air from one room to another through the exhaust ducting system. Exhaust fans in separate dwelling units shall not share a common exhaust duct. Exhaust outlets from more than one dwelling unit may be served by a single exhaust fan downstream of all the exhaust inlets, if the fan is designed and intended to run continuously or if each outlet is equipped with a back-draft damper to prevent cross-contamination when the fan is not running.

ASHRAE Standard 62.2 contains restrictions on several situations where multiple exhausts are connected through a combined duct system. These restrictions are intended to prevent air from moving between spaces through the exhaust ducts.

The first restriction is that if more than one exhaust fan in a dwelling shares a common duct, then each fan must be equipped with a backdraft damper so that air exhausted from one bathroom or unit is not allowed to go into another space. Exhaust fans in multiple dwelling units may not share a common duct.

The other restriction applies to remote fans serving more than one dwelling unit. Sometimes a single remote fan or HRV/ERV will exhaust from several units in a multifamily building. This section does not preclude the use of that type of system, but it does require that either the shared exhaust fan operate continuously or that each unit be equipped with a backdraft damper so that air cannot flow from unit to unit when the fan is off.

In multifamily buildings, fire codes may impose additional restrictions.

4.6.7 Minimum Best Practice Guide: Exhaust-Only Ventilation

See Appendix 4.A for the 2008 Building Energy Efficiency Standards Residential Indoor Air Quality and Mechanical Ventilation (ASHRAE 62.2) Minimum Best Practices guide – Exhaust-Only Ventilation. The Guide can be used to demonstrate compliance with the ventilation requirements of ASHRAE 62.2 (2007) and Section 150(o) of the Standards, and can also be downloaded from the CEC website at http://www.energy.ca.gov/2010publications/CEC-400-2010-006/CEC-400-2010-006.PDF

4.7 Alternative Systems

4.7.1 Hydronic Heating Systems

Hydronic heating is the use of hot water to distribute heat. Hydronic heating is discussed in this compliance manual as an “Alternative System” because it is much less common in California than in other parts of the United States.

A hydronic heating system consists of a heat source, which is either a boiler or water heater, and a distribution system. There are three main types of hydronic distribution systems, and they may be used individually or in combination: baseboard convectors or radiators, hot water air handlers, and radiant panel heating systems. These three options are illustrated in Figure 4-25.

Baseboard convectors or radiators are most effective when mounted near the floor. Cool air rises by gravity over heated panels or finned tubes and warms the air in the room. These devices also increase the mean radiant temperature of the space, improving comfort. Baseboard convectors or radiators do not require ducting.

Air handlers consist of a blower and finned tube coil enclosed in a sheet metal box (similar to a typical residential furnace), and may be ducted or non-ducted. Air handlers may also include refrigerant coils for air conditioning. Some air handlers are compact and can fit under cabinets.

Radiant panels may be mounted on or integrated with floors, walls, and ceilings. Radiant floor panels are most typical. See the separate section below for additional requirements specific to radiant floor designs.

Mandatory Requirements

For hydronic heating systems without ducts, the mandatory measures cover only pipe insulation, tank insulation, and boiler efficiency. Otherwise, for fan coils with ducted air distribution, the mandatory air distribution measures also apply as described earlier in this document. And for combined hydronic systems, as described below, mandatory water heating requirements also apply to the water heating portion of the system.

§150(j) Water System Pipe and Tank Insulation and Cooling Systems Line Insulation

The typical residential hydronic heating system operating at less than 200° F must have at least 1 inch (25 mm) of nominal R-4 insulation on pipes up to 2 inches (50 mm) in diameter and 1.5 inch (38 mm) of insulation on larger pipes. For other temperatures and pipe insulation characteristics see Tables 150-A and 150-B in the Standards.

There are a few exceptions where insulation is not required: sections of pipes where they penetrate framing members; pipes that provide the heat exchange surface for radiant floor heating; piping in the attic that is covered by at least 4 inches (100 mm) of blown insulation on top; and piping installed within walls if all the requirements for Insulation Installation Quality are met (see the envelope chapter).

If the system includes an unfired hot water storage tank, then the tank must be either wrapped with R-12 insulation or insulated internally to at least R-16.

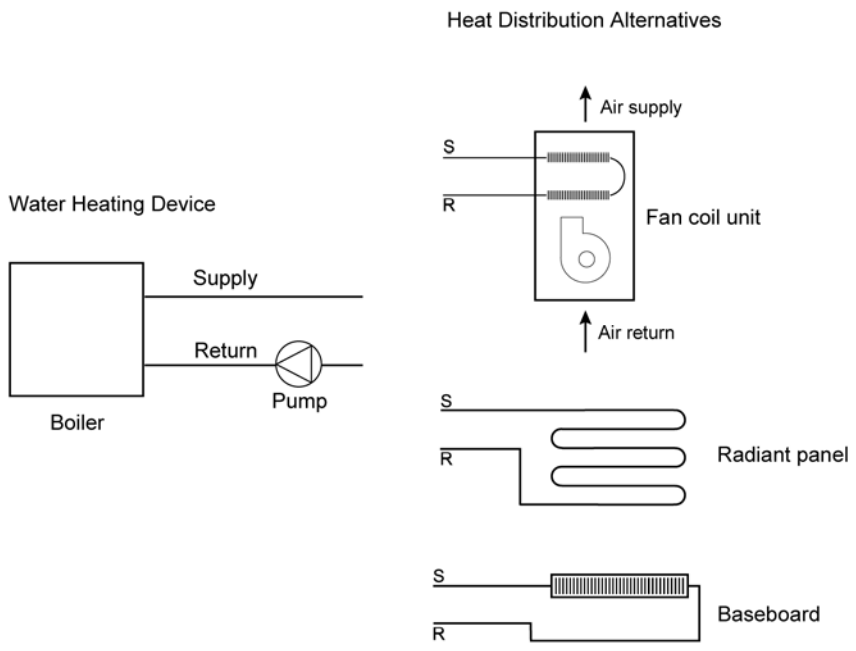

Figure 4-25 – Hydronic Heating System Components

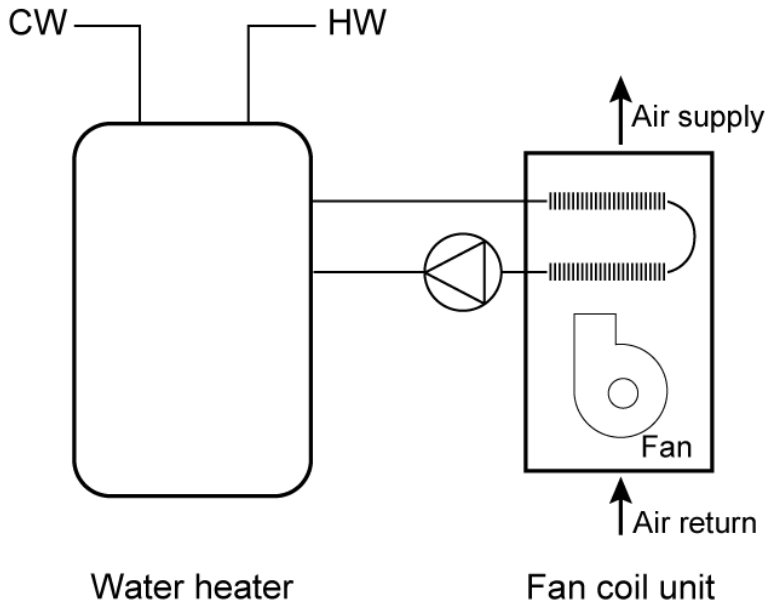

Figure 4-26 – Combined Hydronic System with Water Heater as Heat Source

§123 Requirements for Pipe Insulation

For pipes in hydronic heating systems that operate at pressure greater than 15 psi, the requirements of §123 apply. These are the same requirements that apply to nonresidential piping systems.

Appliance Efficiency Regulations, Title 20

Gas or oil boilers of the size typically used for residential space heating (less than 300,000 Btu/h capacity) must be rated with an AFUE of 80 percent or greater. A gas or oil water heater may also be used as a dedicated source for space heating. Other hot water sources, including heat pumps or electric resistance water heaters, are not allowed for use in dedicated space heating systems. Therefore, some water heaters may be used for space heating only if used as part of a combined hydronic system as described below. In that case, the mandatory water heater requirements apply.

Thermostat requirements also apply to hydronic systems as described in Section 4.5.1.

Prescriptive Requirements

There are no specific prescriptive requirements that apply to hydronic systems. However, if the system has a fan coil with ducted air distribution, the relevant prescriptive requirements apply, including duct insulation and duct sealing.

Compliance Options

Credit for choosing a hydronic heating system is possible using the performance compliance method. The standard design is assumed to have a furnace and ducted air distribution system. Therefore, hydronic systems without ducts can take credit for avoiding duct leakage penalties. In addition, minimizing the amount of pipe outside of conditioned space will provide some savings. Hydronic heating compliance calculations are described in the Residential ACM Manual, Chapter 5.

If the proposed hydronic system includes ducted air distribution, then the associated compliance options described earlier in this chapter may apply, such as adequate airflow (if there is air conditioning) and supply duct location.

A “combined hydronic” system is another compliance option that is possible when using the performance method. Combined hydronic heating refers to the use of a single water heating device as the heat source for both space and domestic hot water heating.

There are two types of combined hydronic systems. One uses a boiler as a heat source for the hydronic space heating system. The boiler also heats domestic water by circulating hot water through a heat exchanger in an indirect-fired water heater.

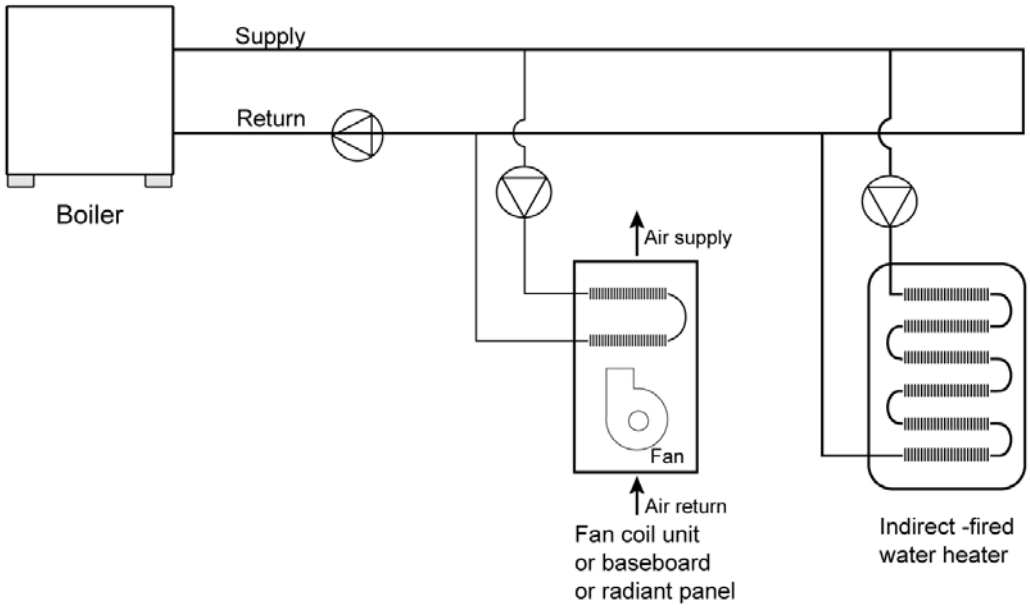

Figure 4-27 – Combined Hydronic System with Boiler and Indirect Fired Water Heater

The other type of hydronic heating uses a water heater as a heat source. The water heater provides domestic hot water as usual. Space heating is accomplished by circulating water from the water heater through the space heating delivery system. Sometimes a heat exchanger is used to isolate potable water from the water circulated through the delivery system. Some water heaters have built-in heat exchangers for this purpose.

For compliance calculations, the water heating function of a combined hydronic system is analyzed for its water heating performance as if the space heating function were separate. For the space heating function, an “effective” AFUE or HSPF rating is calculated. These calculations are performed automatically by the compliance software (see the compliance program vendor’s supplement).

4.7.2 Radiant Floor System

One type of distribution system is the radiant floor system, either hydronic or electric, which must meet mandatory insulation measures (see below). Radiant floors may take one of several forms. Tubing or electric elements for radiant floor systems may be:

- Embedded in a concrete floor slab,
- Installed over the top of a wood sub-floor and covered with a concrete topping,
- Installed over the top of wood sub-floor in between wood furring strips, or
- Installed on the underside surface of wood sub-floor

In the latter two types of installations, aluminum fins are typically installed to spread the heat evenly over the floor surface, and to reduce the temperature of the water as required. All hydronic systems use one or more pumps to circulate hot water. Pumps are controlled directly or indirectly by thermostats, or by special outdoor reset controls.

Mandatory Insulation Measures

§118(g) Insulation Requirements for Heated Slab Floors

Standards Table 118-A Slab Insulation Requirements for Heated Slab-On-Grade Floors

Table 4-10 – Slab Insulation Requirements for Heated Slabs

Location of Insulation	Orientation of Insulation	Installation Criteria	Climate Zone	Insulation R-value
Outside edge of heated slab, either inside or outside the foundation wall	Vertical	From the level of the top of the slab, down 16 inches or to the frost line, whichever is greater. Insulation may stop at the top of the footing where this is less than the required depth. For below-grade slabs, vertical insulation shall be extended from the top of the foundation wall to the bottom of the foundation (or the top of the footing) or frost line, whichever is greater.	1-15	5
			16	10
Between heated slab and outside foundation wall	Vertical and Horizontal	Vertical insulation from the top of the slab at the inside edge of the outside wall down to the top of the horizontal insulation. Horizontal insulation from the outside edge of the vertical insulation extending 4 feet toward the center of the slab in a direction normal to the outside of the building in the plan view.	1-15	5
			16	10 vertical and 7 horizontal

Radiant floor systems in concrete slabs must have insulation between the heated portion of the slab and the outdoors.

When space heating hot water pipes or heating elements are set into a concrete slab-on-grade floor, slab-edge insulation from the level of the top of the slab, down 16 inches (200 mm) or to the frost line, whichever is greater (insulation may stop at the top of the footing, where this is less than the required depth), or insulation installed down from the top of the slab and wrapping under the slab for a minimum of 4 ft toward the middle of the slab, is required. The required insulation value for each of these insulating methods is either R-5 or R-10 depending on climate zone as shown in Table 4-10. Any part of the slab extending outward horizontally must be insulated to the level specified in Table 4-10.

When using the performance compliance method with slab-on-grade construction, the standard design includes slab edge insulation as described above using the F-factors in Reference Joint Appendix JA4, Table 4.4.8.

When space heating hot water pipes or heating elements are set into a lightweight concrete topping slab laid over a raised floor, insulation must be applied to the exterior of any slab surface from the top of the slab where it meets the exterior wall, to the distance below ground level described in Table 4-10. If the slab does not meet the ground on its bottom surface, the specified insulation level must be installed on the entire bottom surface of the raised slab. Any part of the slab extending outward horizontally must be insulated to the level specified in Table 4-10. For lightweight slabs installed on raised floors and inside exterior walls, the overall wall R-value and overall floor R-value (determined as 1/(U-factor)) may be counted toward meeting the minimum R-value requirements specified in Table 4-10.

Raised floor insulation that meets the mandatory minimum R-value for wood floor assemblies also meets the requirement for insulation wrapping under the lightweight topping slab.

Slab edge insulation applied to basement or retaining walls (with heated slab below grade) must be installed so that insulation starts at or above ground level and extends down to the bottom of the foundation or to the frost line, whichever is greater.

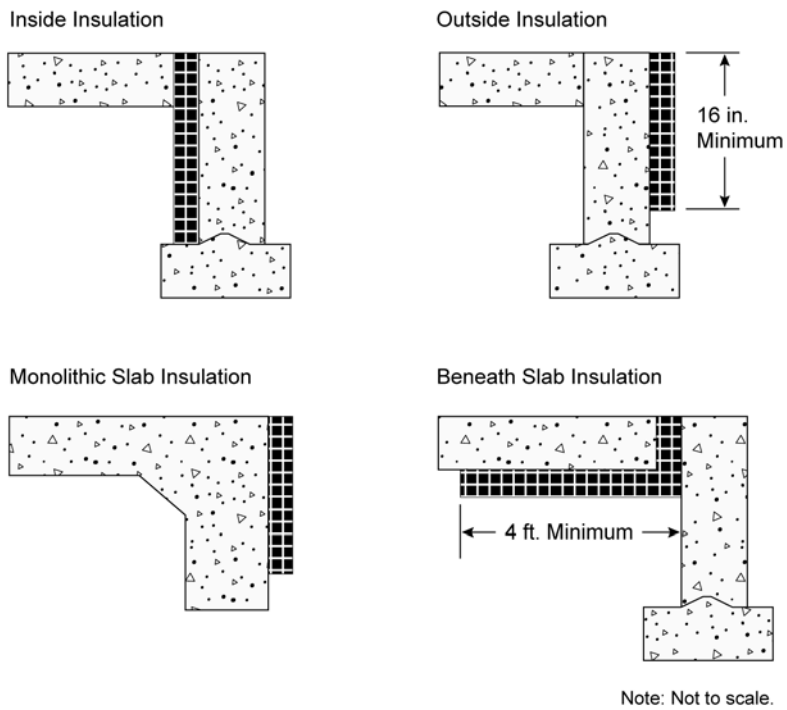

Figure 4-28– Heated Slab-On-Grade Floor Insulation Options

Local conditions (such as a high water table) may require special insulation treatment in order to achieve satisfactory system performance and efficiency. To determine the need for additional insulation, follow the recommendations of the manufacturer of the hydronic tubing or heating element being installed. Where there is a danger of termite infestation, install termite barriers, as required, to prevent hidden access for insects from the ground to the building framing.

In addition to the insulation R-value requirements, the Standards also set mandatory measures related to moisture absorption properties of the insulation and protection of the insulation from physical damage or pest intrusion.

Example 4-39

Question

My client wants a dedicated hydronic-heating system (space heating only), but a few things are unclear: (1) What piping insulation is required? (2) Can I use any compliance approach? (3) Do I have to insulate the slab with slab edge insulation? and (4) What special documentation must be submitted for this system type?

Answer

(1) The supply lines not installed within a concrete radiant floor must be insulated in accordance with §150(j)—1.0 inch (25mm) of nominal R-4 on pipes that are 2 inch (50 mm) or less in diameter, and 1.5 inch (38 mm) for pipes greater than 2 inch (50 mm) in diameter.

(2) You can use any compliance approach, but the boiler must meet the mandatory efficiency 80 percent AFUE.

(3) The slab edge insulation shown in Table 4-10 is required only when the distribution system is a radiant floor system (pipes in the slab). When this is the case the insulation values shown are mandatory measures (no modeling or credit).

(4) No special documentation is required.

Example 4-40

Question

What are the slab edge insulation requirements for a hydronic-heating system with the hot water pipes in the slab?

Answer

The requirements for slab edge insulation can be found in §118 and §150(l).

Material and installation specifications are as follows:

• insulation values as shown in Table 4-10

• protected from physical damage and ultra-violet light deterioration,

• water absorption rate no greater than 0.3 percent (ASTM-C272), and

• water vapor permeance no greater than 2.0 per inch (ASTM-E96-90).

4.7.3 Evaporative Cooling

Evaporative coolers provide cooling to a building by either passing outdoor air through a wetted evaporative media (direct evaporative cooler), by indirect cooling through a non-porous heat exchanger separating evaporatively cooled secondary air from outdoor air, or by a combination indirect-direct system that combines an indirect heat exchanger with a downstream direct evaporative process. Although direct coolers are the most common systems available, the more advanced

indirect and indirect-direct systems offer generally lower supply air temperatures with less moisture addition to indoor space. For the 2008 Energy Efficiency Standards, performance credit is allowed only for indirect and indirect-direct evaporative cooling systems. All coolers receiving credits within the ACM Manual must be listed in the Energy Commission's Title 20 Evaporative Cooler appliance database[1].

Evaporative coolers may be used with any compliance approach. In the prescriptive compliance approach, all evaporative coolers are treated as a minimum efficiency 13.0 SEER air conditioner.

In the performance approach the compliance software uses an hourly model based on unit effectiveness, supply airflow, and power to determine the magnitude of the credit based on climate conditions and unit sizing relative to the loads. Typical cooling budget credits are approximately 20-30 percent, depending upon these factors.

The evaporative cooling system must meet the following requirements to receive credit based on the hourly performance method described above. Direct coolers, as well as indirect and indirect-direct coolers not meeting these criteria shall be modeled as a minimum efficiency (13.0 SEER) central air conditioner.

Eligibility and Installation Criteria:

1. The equipment manufacturer shall certify to the Commission that water use does not exceed 7.5 gallons per ton hour based on the Title 20 Appliance Efficiency Regulations testing criteria.
2. Equipment shall be permanently installed (no window or portable units).
3. Installation shall provide for automatic relief of supply air from the house with maximum air velocity through the relief dampers not exceeding 800 fpm (at the Title 20 rated airflow). Pressure relief dampers and ductwork shall be distributed to provide adequate airflow through all habitable rooms. For installations with an attic, ceiling dampers shall be installed to relieve air into the attic and then to outside through attic vents. For installations without an attic, sidewall relief dampers are acceptable.
4. To minimize water consumption, bleed systems are not allowed.
5. A water quality management system (either "pump down" or conductivity sensor) is required. "Pump down" systems can either be integral to the evaporative cooler or they can be accessories that operate on a timed interval. The time interval between pumps shall be set to a minimum of 6 hours of cooler operation. Longer intervals are encouraged if local water quality allows.
6. Automatic thermostats are required. Manual On/Off controls are not allowed.
7. If the evaporative cooler duct system is shared with a heating and/or cooling system, the installed duct system shall employ backdraft dampers at the evaporative cooler supply.

[1] http://www.energy.ca.gov/appliances/appliance/excel_based_files/Non_Central_AC_HPs/

8. The installing contractor must provide a winter closure device that substantially blocks outdoor air from entering the indoor space.
9. The size of the water inlet connection at the evaporative cooler shall not exceed 3/8 inch.
10. Unless prohibited by local code, the sump overflow line shall not be directly connected to a drain and shall be terminated in a location that is normally visible to the building occupants.

Example 4-41

Question

How are applications with vapor compression cooling systems and evaporative cooling systems handled?

Answer

In situations where both evaporative cooling system(s) and vapor compression system(s) are installed in a house, the sizing of the evaporative cooler will dictate the magnitude of the credit. The performance approach will ensure that an evaporative cooler sized to meet most of the cooling loads will generate a higher credit than one sized to meet a fraction of the design cooling load.

Example 4-42

Question

How do you model multiple evaporative coolers on one house?

Answer

In situations with multiple evaporative coolers, effectiveness inputs should be averaged, and airflow and power inputs should be totaled. Performance characteristics of each piece of equipment should be individually listed on the compliance forms.

4.7.4 Ground-Source Heat Pumps

Table 4-11 – Standards for Ground Water-Source and Ground-Source Heat Pumps Manufactured on or after October 29, 2003

Source: Section 1605.3 Table C-7 of the 2007 California Appliance Efficiency Regulations

Appliance	Rating Condition	Minimum Standard
Ground water source heat pumps (cooling)	59º F entering water temperature	16.2 EER
Ground water source heat pumps (heating)	50º F entering water temperature	3.6 COP
Ground source heat pumps (cooling)	77º F entering brine temperature	13.4 EER
Ground source heat pumps (heating)	32º F entering brine temperature	3.1 COP

A geothermal or ground-source heat pump uses the earth as a source of energy for heating and as a heat sink for energy when cooling. Some systems pump

water from an aquifer in the ground and return the water to the ground after exchanging heat with the water. A few systems use refrigerant directly in a loop of piping buried in the ground. Those heat pumps that either use a water loop or pump water from an aquifer have efficiency test methods that are accepted by the Energy Commission.

The mandatory efficiencies for ground water source heat pumps are specified in the California Appliance Efficiency Regulations, and repeated in Table 4-11. These efficiency values are certified to the Energy Commission by the manufacturer and are expressed in terms of Coefficient of Performance (COP) for heating and EER for cooling.

For the performance compliance approach, the COP must be converted to HSPF. To take appropriate credit the EER should be entered as a HERS verified EER, which requires that a HERS rater verify the equipment efficiency. When this approach is used, a significant portion of the ground source heat pumps efficiency will not be accounted for. If credit is not taken, the EER may be used in place of the SEER. When heat pump equipment is not tested for HSPF, calculate the HSPF as follows:

Equation 4-3

$$HSPF = (3.2 \times COP) - 2.4$$

The efficiency of geothermal heat pump systems is dependent on how well the portion of the system in the ground works. Manufacturers' recommendations must be followed carefully to ensure that the system is appropriately matched to the soil types and weather conditions. Local codes may require special installation practices for the ground-installed portions of the system. Verify that the system will meet local code conditions before choosing this type of system to meet the Standards.

4.7.5 Solar Space Heating

Solar space-heating systems are not recognized within either the prescriptive packages or the performance compliance method.

4.7.6 Wood Space Heating

The Energy Commission's exceptional method for wood heaters with any type of backup heating is available in areas where natural gas is not available. If the required eligibility criteria are met, a building with one or more wood heaters may be shown to comply with the Standards using either the prescriptive or performance approaches as described below.

Prescriptive Approach

The building envelope conservation measures of any one of the Alternative Component Packages must be installed. The overall heating system efficiency (wood stove plus back-up system) must comply with the prescriptive requirements.

Performance Approach

A computer method may be used for compliance when a home has wood space heat. There is no credit, however. Both the proposed design and the standard building are modeled with the same system, example, with the overall heating system efficiency equivalent to a 78 percent AFUE central furnace with ducts in the attic insulated to either Package D or E levels and with diagnostic duct testing.

Wood Heater Qualification Criteria

The Standards establish exceptional method guidelines for the use of wood heaters. If all of the criteria for the wood heat exceptional method are not met, a backup heating system must be included in the compliance calculations as the primary heat source.

The following eligibility criteria apply:

1. The building department having jurisdiction must determine that natural gas is not available.

Note: Liquefied petroleum gas, or propane, is not considered natural gas.

2. The local or regional air quality authority must determine that its authorization of this exceptional method is consistent with state and regional ambient air quality requirements pursuant to Sections 39000 to 42708 of the California Health and Safety Code.
3. The wood heater must be installed in a manner that meets the requirements of all applicable health and safety codes, including, but not limited to, the requirements for maintaining indoor air quality in the CMC, in particular those homes where vapor barriers are.
4. The wood heater must meet the EPA definition of a wood heater as defined in Title 40, Part 60, Subpart AAA of the Code of Federal Regulations (40CFR60 Subpart AAA) (see below).
5. The performance of the wood heater must be certified by a nationally recognized agency and approved by the building department having jurisdiction to meet the performance standards of the EPA.
6. The rated output of the wood heater must be at least 60 percent of the design heating load, using calculation methods and design conditions as specified in §150(h).
7. At the discretion of the local enforcement agency, a backup heating system may be required and be designed to provide all or part of the design heating load, using calculation methods and design conditions as specified in §150(h).
8. The wood heater must be located such that transfer of heat from the wood heater is effectively distributed throughout the entire residential unit, or it must be used in conjunction with a mechanical means of providing heat distribution throughout the dwelling.
9. Habitable rooms separated from the wood heater by one free opening of less than 15 ft² or two or more doors must be provided

with a positive heat distribution system, such as a thermostatically controlled fan system. Habitable rooms do not include closets or bathrooms.

10. Wood heaters on a lower level are considered to heat rooms on the next level up, provided they are not separated by two or more doors.
11. The wood heater must be installed according to manufacturer and local enforcement agency specifications and must include instructions for homeowners that describe safe operation.
12. The local enforcement agency may require documentation that demonstrates that a particular wood heater meets any and all of these requirements.

40CFR60 Subpart AAA includes minimum criteria for wood heaters established by the US EPA. These criteria define a wood heater as an enclosed, wood-burning appliance capable of and intended for space heating or domestic water heating that meets all of the following criteria:

1. An air-to-fuel ratio averaging less than 35 to 1
2. A firebox volume less than 20 ft^3.
3. A minimum burn rate less than 5 kilogram/hour (11.0 lbs/hr)
4. A maximum weight of less than 800 kilograms (1760 lbs)

The federal rules explicitly exclude furnaces, boilers, cook stoves, and open masonry fireplaces constructed on site, but include wood-heater inserts.

Example 4-43

Question

Are pellet stoves treated the same as wood stoves for the purposes of Standards compliance?

Answer

Yes.

Example 4-44

Question

If a wood stove is installed in a wall, does it have to meet the fireplace requirements of §150(e)?

Answer

No. A wood stove that meets EPA certification requirements does not have to meet any requirements applicable to fireplaces.

4.7.7 Gas Appliances

§115 Pilot Lights

As noted in an earlier section, pilot lights are prohibited in fan-type central furnaces. The Standards also prohibit pilot lights in cooking appliances, pool

heaters, and spa heaters. However, one exception is provided for household cooking appliances without an electrical supply voltage connection and in which each pilot consumes less than 150 Btu/h.

For requirements related to installation of fireplaces, decorative gas appliances, and gas logs, see the envelope chapter.

4.7.8 Evaporatively Cooled Condensers

Evaporatively Cooled Condenser Air conditioners are a type of air conditioning system that can provide significant space cooling savings especially in hot dry climates such as the central valley, interior south coast and desert area of California. The equipment minimal efficiencies are determined according to federal test procedures. Their efficiencies are reported in terms of Energy Efficiency Rating (EER).

The EER is the full load efficiency at specific operating conditions. In cooling climate zones of California, high EER units are more effective in saving energy than high SEER units. Using the performance compliance method, credit is available for specifying evaporatively cooled air conditioner. When credit is taken for a high EER, field verification by a HERS rater is required.

If an evaporatively cooled air conditioner is installed, HERS verified measures must be installed including duct sealing, airflow and refrigerant charge or charge indicatory lights. Besides the HERS verification, there are additional special requirement for evaporatively cooled condensing air conditioners. Among these are the following requirements, that the manufacturer provide certification that water use is limited to no more than 0.15 gallon per minute per ton of capacity and that the supply line be no larger than ¼ inch in diameter. For a listing of all the requirements for evaporatively cooled condensing air conditioners see the CF-6R compliance form.

4.7.9 Ice Storage Air Conditioners

Ice storage air conditioners use a conventional split system air conditioner where the outdoor coil is installed in a large storage tank. The system uses a special operating schedule which runs the compressor during the cooler night hours. During this period the system turns the water in the storage tank into ice. As the day warms up and the house needs cooling, the compressor is shut off and the system uses the ice in the storage tank as the source of cooling.

The only way to claim compliance credit for installing an ice storage air conditioner is to use the performance compliance method.

If an ice storage air conditioner is installed, HERS verified measures must be installed including duct sealing, airflow and refrigerant charge or charge indicator lights.

4.7.10 Non-Ducted Systems

Several manufacturers currently offer equipment that does not use air distribution ducts to heat or cool spaces. These systems use either refrigerant or water that has been heated and/or cooled to condition the space. Besides not using duct

work these systems have advanced controls and full range multi-speed compressors that will allow for optimal performance through a wide range of conditioning loads without losing efficiency.

Currently these systems must be modeled as though they were minimal efficient units. The Energy Commission expects that the manufacturers will apply for a compliance option in the near future which will allow for the development of appropriate modeling rules to be included in the performance calculation approach.

As with all other high performance system, the Energy Commission recommend that all associated HERS verified measure be conducted to assure that all of the efficiency of this equipment is captured.

4.8 Compliance and Enforcement

The purpose of this section is to highlight compliance documentation and field verification requirements related to heating and cooling systems.

4.8.1 Design

The initial compliance documentation consists of the Certificate of Compliance (CF-1R). This document is required to be included on the plans and specifications. The CF-1R has a section where special modeling features are listed. The following are heating and cooling system features that should be listed in this section if they exist in the proposed design:

Special Features Not Requiring HERS Rater Verification:

- Ducts in a basement
- Ducts in a crawlspace
- Ducts in an attic with a radiant barrier
- Hydronic heating and system design details
- Gas-fired absorption cooling
- Zonal control
- Ductless wall heaters

Special Features Requiring HERS Rater Verification:

- Duct sealing
- Verified duct design – for reduced duct surface area and ducts in conditioned space
- Low leakage ducts in conditioned space
- Low leakage air handlers
- Refrigerant charge
- Installation of a Charge Indicator Display (CID)
- Verified cooling coil airflow

- Air handler fan watt draw
- High energy efficiency ratio (EER)
- Maximum rated total cooling capacity
- Evaporatively cooled condensers
- Ice storage air conditioners
- Ducts <12 ft outside conditioned space.

Information summarizing measures requiring field verification and diagnostic testing is presented in Table RA2-1 of the Reference Residential Appendix RA2. The field verification and diagnostic testing protocols that must be followed to qualify for compliance credit are described in RA3 of the Reference Residential Appendix.

If registration of the CF-1R is required (see Chapter 2 for requirements), the building owner, or the person responsible for the design must submit the CF-1R to the HERS provider Data registry for retention following the procedures described in Chapter 2 and in RA2 of the Reference Residential Appendix.

4.8.2 Construction

During the construction process, the contractor and/or specialty contractors must complete the applicable sections of an Installation Certificate (CF-6R) for any building design special features specified on the certificate of compliance. A list of CF-6R sections that apply to the HVAC special feature requirements follows:

- HVAC Systems
- Duct Leakage Diagnostics
- Refrigerant Charge Verification. The installer must provide Temperature Measurement Access Holes (TMAH) and if required prescriptively, Saturation Temperature Measurement Sensors (STMS). An alternative to refrigerant charge verification is installation of a charge indicator display on the system.
- Duct Design Verification for the Location and Area Reduction compliance measures. The duct design specifications and layout must be included on the building plans submitted to the enforcement agency, and a copy of the duct design layout must be posted or made available with the building permit(s) issued for the building, and must be made available to the enforcement agency, installing contractor, and HERS rater for use during the installation work and for all applicable inspections.
- Fan Watt Draw Verification
- Cooling Coil Airflow Verification. Installer must provide a Hole for the Placement of a Static Pressure Probe (HSPP), or a Permanently Installed Static Pressure Probe (PSPP)
- Maximum Rated Total Cooling Capacity Verification
- High EER Verification. The ARI ratings for the installed system must meet or exceed the required specifications for the system

shown on the CF-1R. The rating for the installation will require HERS verification.

- Whole-Building Ventilation for Indoor Air Quality (IAQ), Local Ventilation Exhaust, and other IAQ measures given in ASHRAE Standard 62.2(these are mandatory requirements for all new construction).

If registration of the CF-6R is required, the licensed person responsible for the installation must submit the CF-6R information that applies to the installation to a HERS provider Data registry using procedures described in Chapter 2 and in RA2 of the Reference Residential Appendix.

4.8.3 Field Verification and/or Diagnostic Testing

For buildings for which the Certificate of Compliance (CF-1R) requires HERS field verification for compliance with the Standards, a HERS rater must visit the site to perform field verification and diagnostic testing, to complete the applicable heating and cooling system Certificates of Field Verification and Diagnostic Testing (CF-4R). The following measures require field verification and diagnostic testing if they are used in the proposed design for compliance, and are listed on the CF-1R as special Features Requiring HERS Rater Verification:

- Verified duct leakage.

  Note: Outside air (OA) ducts for Central Fan Integrated (CFI) ventilation systems, shall not be sealed/taped off during duct leakage testing. CFI OA ducts that utilize controlled motorized dampers, that open only when OA ventilation is required to meet ASHRAE Standard 62.2, and close when OA ventilation is not required, may be configured to the closed position during duct leakage testing.

- Verified Duct Design - supply duct location, surface area, and R-value (including buried ducts).
- Low leakage ducts in conditioned space.
- Low leakage air handlers.
- Refrigerant charge verification utilizing the installer-provided Temperature Measurement Access Holes (TMAH). Saturation Temperature Measurement Sensors (STMS) may be required for some installations that comply utilizing the prescriptive method.
- Verification of installation of a Charge Indicator Display (CID)
- Forced air system cooling coil airflow verification utilizing the installer-provided hole for the placement of a Hole for a Static Pressure Probe (HSPP), or a Permanently installed Static Pressure Probe (PSPP).
- Air handler fan watt draw.
- High efficiency air conditioner energy efficiency ratio (EER).
- Verified maximum cooling capacity.

- Evaporatively cooled condensers.
- Ice storage air conditioners
- Photovoltaic (PV) field Verification. To receive PV rebates for photovoltaic installations pursuant to the New Solar Home Partnership, the output of the installed system must be measured and shown to comply with the output specified on the rebate application (taking into account variables such as the solar insolation, the time, and the temperature)

Field verification is necessary only when performance credit is taken for the measure. For example, maximum cooling capacity need only be HERS verified if maximum cooling capacity was used to achieve credit in the proposed design.

When registration of the CF-4R is required, the HERS rater must submit the CF-4R information to the HERS provider data registry as described in Chapter 2. For additional detail describing HERS verification and the registration procedure, refer to RA2 of the Reference Residential Appendix.

4.9 Refrigerant Charge

4.9.1 Refrigerant Charge Testing

This section provides a summary of the procedures for verifying refrigerant charge for air conditioning systems without a charge indicator display. RA3.2 of the Reference Residential Appendix describes the procedures in detail, and refrigeration technicians who do the testing should refer to these and other technical documents. This section is intended for those who need to know about the procedures but will not be doing the testing.

Overview

A split system air conditioner undergoes its final assembly at the time of installation. This installation must be verified to ensure proper performance. Important factors include the amount of refrigerant in the system (the charge) and the proper functioning of the metering device. Air conditioner energy efficiency suffers if the refrigerant charge is either too low or too high and if the metering device is not functioning properly. In addition to a loss of efficiency, errors in these areas can lead to premature compressor failure.

To help avoid these problems, the prescriptive standards require that systems be correctly installed. This section describes the measurements and tests required to verify proper refrigerant charge and that the metering device is working as designed. The testing requirement applies only to ducted split system central air conditioners and ducted split system central heat pumps. An alternative to the testing requirement is the installation of a charge indicator display that continuously monitors the function of the unit. The testing requirement does not apply to packaged systems, for which final assembly is completed in the factory.

There are two procedures, the Standard Method for use when the outdoor air temperature is 55°F or above and the Alternate Method that is used by installers

when the outdoor air temperature is below 55°F. All HERS verifications must be done using the standard method.

The testing must occur after the HVAC contractor has installed and charged the system in accordance with the manufacturer's specifications. The procedure requires properly calibrated digital thermometers, thermocouples, and refrigerant gauges. For homes with multiple systems, each system must be tested separately.

Standard Charge Measurement Procedure

The first step is to turn on the air conditioning system and let it run for at least 15 minutes in order to stabilize temperatures and pressures. While the system is stabilizing, the HERS rater or the installer may fit the instruments needed to take the measurements.

In order to have a valid charge test, the airflow must be verified. One option is to perform the temperature split test. As an alternative, one of the three airflow measurement methods in RA3.3 can be performed to determine a measured airflow in excess of the 350 cfm/ton requirement. If one of the optional tests is used, there is the potential for additional compliance performance credits.

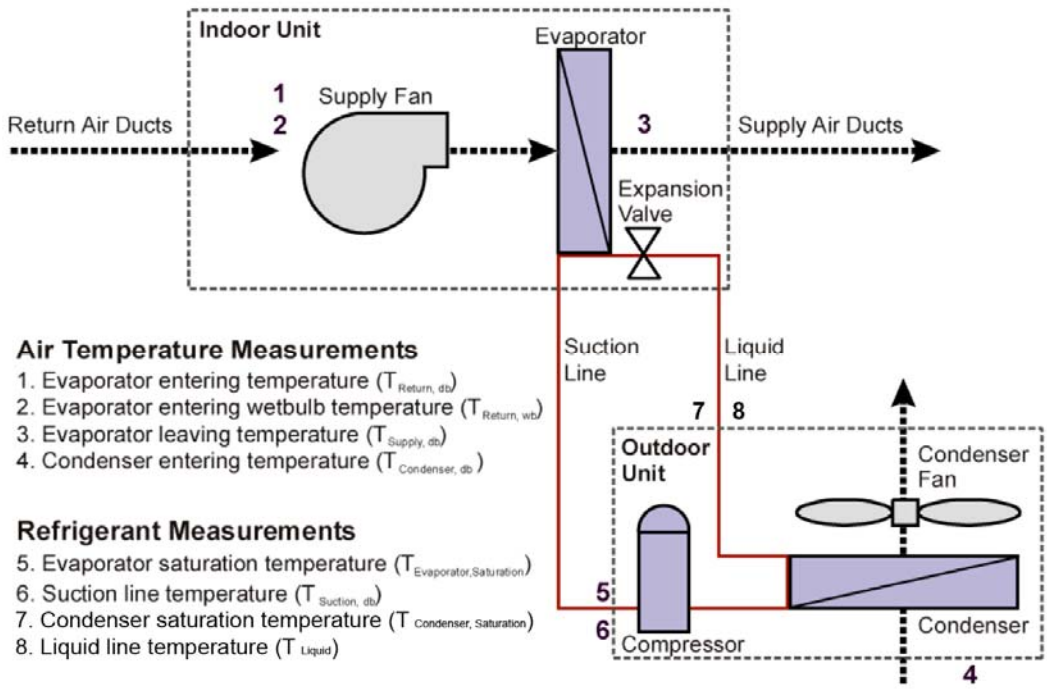

Figure 4-29 – Measurements for Refrigerant Charge and Airflow Tests

Mixed return air temperatures are measured in the return plenum before the blower. At the location labeled "Title 24 – Return Temperature Access" (see points 1 and 2 in Figure 4-29), both the drybulb and wetbulb temperatures are measured. The mixed supply air drybulb temperature is measured in the supply plenum downstream of the cooling coil at the location labeled "Title 24 – Supply Temperature Access" (see point 3 in Figure 4-29). Additionally, the air

temperature is measured at the point where the air enters the outdoor condensing coil (see point 4 in Figure 4-29). It is important that this outdoor temperature sensor be shaded from direct sun.

In addition to the air temperature measurements, four refrigerant properties need to be measured. Two of these measurements are taken near the suction line service valve before the line enters the outdoor unit (see points 5 and 6 in Figure 4-29). The first measurement is the temperature of the refrigerant in the suction line, which is taken by a clamp-on thermocouple insulated from the outdoor air. The second measurement determines the saturation temperature of the refrigerant in the evaporator coil. The saturation temperature can be read directly from a sensor permanently installed on the saturation region of the evaporator coil (see Reference Residential Appendix RA 3.2.2.3) or can be determined from the low-side pressure and a saturation temperature table for the applicable refrigerant. There is a one-to-one relationship between saturation temperature and saturation pressure for a given refrigerant. Two refrigerant temperatures are measured near the liquid line service valve at the point where the line exits the outdoor unit (see points 7 and 8 in Figure 4-29) . The liquid refrigerant temperature is measured by a clamp-on thermocouple insulated from the outdoor air. The condenser saturation temperature can be read from a sensor permanently installed on the saturation region of the condenser coil (see Reference Residential Appendix RA 3.2.2.3) or can be determined from the high side pressure and a saturation temperature table for the applicable refrigerant. Note: determination of the saturation temperature and the liquid line temperature is required only for systems with TXV or EXV metering devices.

Superheat Charging Method

The *Superheat Charging Method* is used on units with a fixed refrigerant metering device (not a TXV or EXV).

Unless an alternative airflow verification is used, the *Temperature Split Method* is performed simultaneously with the *Superheat Charging Method*.

Table 4-12– Structure of Target Superheat Temperature

		Return Air Wet-Bulb Temperature (°F) (T Return, wb)									
		50	51	52	53	54	55	..	..	75	76
Condenser Air Dry-Bulb Temperature (°F) (T condenser, db)	55	Target Superheat Temperatures = (Suction Line Temperature minus Evaporator Saturation Temperature) – See Reference Residential Appendix Table RA3.2-2									
	56										
	57										
	..										
	..										
	93										
	94										
	95										

Table 4-13 – Structure of Target Temperature Split

(Return Dry-Bulb minus Supply Dry-Bulb)

Complete table is in Reference Residential Appendix Table RA3.2-2

		Return Air Wet-Bulb Temperature (°F) (T Return, wb)									
		50	51	52	53	54	55	..	..	75	76
Return Air Dry–Bulb (°F) (T return, db)	70	Target Temperature Splits = (Return Dry Bulb Temperature minus Supply Dry Bulb Temperature) – See Reference Residential Appendix RA3.2-2									
	71										
	72										
	..										
	..										
	82										
	83										
	84										

The *Superheat Charging Method* involves comparing the measured superheat temperature to a target value from a table. The measured superheat temperature is the suction line temperature ($T_{Suction, db}$) minus the evaporator saturation temperature ($T_{Evaporator, Saturation}$). The target superheat value is read from a table (see Table RA3.2-2 of the Reference Residential Appendix). For illustration purposes, the structure of the table is shown above as Table 4-132. If the actual superheat temperature and the target superheat value are within 5°F of each other, the system passes the required refrigerant charge criterion. If the actual superheat temperature exceeds the target superheat value by more than 5°F, then the system is undercharged. If the actual superheat temperature minus the target superheat value is between -5 and -100°F, then the system is overcharged. Only an EPA-certified technician may add or remove refrigerant.

Subcooling Charging Method

The *Subcooling Charging Method* is used on units with a variable refrigerant metering device (a TXV or EXV).

Unless an airflow verification is used, the Temperature Split Method is performed simultaneously with the Subcooling Charging Method.

The *Subcooling Charging Method* involves comparing the measured subcooling temperature to the target value supplied by the manufacturer. The measured subcooling temperature is the condenser saturation temperature ($T_{Condenser, Saturation}$) minus the liquid line temperature (T_{Liquid}). If the actual subcooling temperature and the target subcooling are within 3°F of each other, the system passes the required refrigerant charge criterion. If the actual amount of subcooling exceeds the target amount of subcooling by more than 3°F, then the system is overcharged. If the actual amount of subcooling is less than 3°F of the target amount of subcooling, the system is undercharged.

The Temperature Split Method

The rater and/or the installer must allow the system to run continuously for 15 minutes before performing the *Temperature Split Method* measurements. The

Temperature Split Method is performed simultaneously with the *Superheat Charging Method* or *Subcooling Charging Method*.

With the *Temperature Split Method*, the air temperature drop across the cooling coil is compared to a target value read from a table. This temperature drop is called the temperature split. The temperature split is the difference between the drybulb temperature in the return (entering the evaporator) and the drybulb temperature in the supply (leaving the evaporator).

Equation 4-4

Actual Temperature Split = $T_{Return, db} - T_{Supply, db}$

The Target Temperature Split depends on return air wet-bulb temperature ($T_{Return, wb}$) and return air dry-bulb temperature ($T_{Return, db}$). Table 4-13 shows the organization of the target temperature split table. The Reference Residential Appendix RA3.2 has the full Target Temperature Split table. If the actual and target are within plus or minus (+/-) 3°F, then the system has sufficient airflow for a valid refrigerant charge test.

If the actual temperature split exceeds the target temperature split by more than 3°F, then airflow is inadequate and must be increased. Increasing airflow can be accomplished by eliminating restrictions in the duct system, increasing blower speed, cleaning filters, or opening registers. After the installer corrects the problem and verifies adequate airflow through the installer's own testing, the HERS rater repeats the measurements to verify a correct refrigerant charge and airflow.

If the actual temperature split is more than 3°F below the target temperature split, the measurement procedure must be repeated making sure that temperatures are measured where the airflow is mixed. If the re-measured numbers still show that the actual temperature split is more than 3°F below the target temperature split, then the system passes, but it is likely that the air conditioner is not producing the capacity it was designed to produce. There may be problems with this air conditioner. (It is possible, but unlikely, that airflow is higher than average).

Alternate Charge Measurement Procedure

With this method, the required refrigerant charge is calculated using the *Weigh-In Charging Method*, and adequate airflow across the evaporator coil is verified to be in excess of 350 cfm/ton using one of the three measurements in RA3.3 of the Reference Residential Appendix. The *Weigh-In Charging Method* is used only when the outdoor temperature is below 55°F.

EPA-certified technicians must perform the procedure, as follows:

1. Calculate the refrigerant charge adjustment needed for refrigerant lines, which are longer, shorter, or of different diameter from the standard lineset for this air conditioner, and after properly evacuating the coil and lineset.
2. By weight, add or remove the proper amount of refrigerant to compensate for the actual lineset length/diameter using the manufacturer's specifications for adjusting refrigerant charge for non-standard lineset lengths/diameters

Appendix 4.A

2008 Building Energy Efficiency Standards
Residential Indoor Air Quality and Mechanical Ventilation
(*ASHRAE 62.2*)

Minimum Best Practices Guide - Exhaust-Only Ventilation

Introduction:

The California Energy Commission has created the following guide to provide assistance in complying with *ANSI/ASHRAE Standard 62.2-2007, Ventilation and Acceptable Indoor Air Quality in Low-Rise Residential Buildings* (*ASHRAE 62.2*); which was adopted by reference into the *2008 Building Energy Efficiency Standards (Standards)*. *ASHRAE 62.2* was adopted to respond to concerns that reliance solely on operable windows is inadequate to provide ventilation in low-rise residential buildings. This, coupled with concerns about increasing levels of indoor contaminants and mold growth, has led to the need for mechanical ventilation.

The two main requirements of *ASHRAE 62.2* are (1) whole-building ventilation to maintain acceptable air quality, and (2) local intermittent exhaust fans in each kitchen and bathroom to reduce the levels of contaminants and moisture in these spaces.

The minimum best practices in this guide apply to residential low-rise newly constructed buildings and additions, including multi-family occupancies. The guide provides an exhaust-only approach acceptable for most residential projects needing to meet the *Standards*. Additional guidance in meeting the *Standards* may be obtained by calling the Energy Commission's *Standards* Hotline at (800) 772-3300.

Background:

The *2008 Building Energy Efficiency Standards* (*Standards*) require all newly constructed residential buildings to meet the requirements of *ANSI/ASHRAE Standard 62.2-2007, Ventilation and Acceptable Indoor Air Quality in Low-Rise Residential Buildings* (*ASHRAE 62.2*). In California, the requirements of *ASHRAE 62.2* also apply to additions over 1,000 square feet (sf) of conditioned floor area (CFA), and window operation is not allowed as a permissible method for providing whole-building ventilation (Section 150(o) of the *Standards*).

ASHRAE 62.2 is a health and safety measure developed by the American Society of Heating, Refrigerating and Air-Conditioning Engineers, Inc. (ASHRAE) to enable dwellings to achieve acceptable indoor air quality. *ASHRAE 62.2* has been adopted in the *Standards* to respond to concerns that reliance solely on operable windows is inadequate to provide for ventilation in low-rise residential buildings. This, coupled with concerns about increasing levels of indoor contaminants and mold growth, has led to the need for mechanical ventilation. Implementation of these ventilation requirements will demand careful attention by builders and a focused review by enforcement agencies.

ASHRAE 62.2 specifies two mechanical ventilation airflow requirements - **Whole-Building Ventilation** and **Local Ventilation Exhaust**, and specifies criteria for prescriptive duct sizing for those ventilation systems. Other additional requirements are specified that affect indoor air quality. All applicable requirements must be met to demonstrate compliance with *ASHRAE 62.2*.

Whole-building ventilation is required to maintain acceptable air quality in a dwelling at all times. A switch is provided for controlling the operation of the fan. This allows the fan to be turned off when there are no occupants in the dwelling or when indoor air quality would be reduced when outdoor air is brought into the dwelling. The fan used for continuous ventilation must have a low sound rating in order to avoid having occupants switch off the fan to reduce the noise level. Local intermittent exhaust fans are required in all kitchens and bathrooms to reduce the level of contaminants and moisture in these spaces when they occur. These fans can be switched on and off when needed. The additional requirements are applied as applicable to the dwelling design in order to support and maintain the levels of indoor air quality provided by the whole-building and local intermittent ventilation systems.

Standards Section 10-103 requires the submittal of documentation on the building plans. Sufficient design information should be placed on the plans to demonstrate compliance with the applicable requirements of *ASHRAE 62.2* prior to issuance of a building permit. Appendix I of this guide provides sample calculations for airflow requirements and prescriptive fan and duct system sizing. Appendix II provides sample noteblocks that can be used to provide exhaust ventilation system design specifications that may be required by the enforcement agency to be included on the plans. Appendix III provides a sample Homeowner's Maintenance and Operation Form for use with this Guide. Appendix IV provides a summary checklist that may be helpful when designing a minimum best practice ventilation system.

The following minimum best practices apply to residential low-rise newly constructed buildings and additions, including multi-family occupancies. They have been developed to provide a design and construction "exhaust-only" ventilation approach acceptable for most residential projects needing to meet the *Standards*. *ASHRAE 62.2* allows compliance to be shown either through Prescriptive Ventilation System Inspection or Performance Ventilation System Testing. This guide does not include explanations for the use of other acceptable compliance alternatives in addition to "exhaust-only" ventilation, which are described in Section 4.6 of the *2008 Residential Compliance Manual*. Guidance for these other than "exhaust-only" alternative approaches, as well as additional information on the practices described below, may be obtained by calling the California Energy Commission's Energy Standards Hotline at (800) 772-3300.

Minimum Best Practices Guide

The following Minimum Best Practices Guide is a supplement to the *2008 Residential Compliance Manual* and can be used to demonstrate compliance with the ventilation requirements of *ASHRAE 62.2* and Section 150(o) of the *Standards*. The guide provides a summary of *ASHRAE 62.2* and a simplified exhaust-only approach for meeting its minimum ventilation requirements. If a statement in this Guide describes an action that must be completed for compliance with the *Standards*, there will be a box at the beginning of the statement that can be used to check off completed items, or to indicate "NA" for "not applicable" to this project for that item. An underlined blank space indicates that a value is required to be entered. When (Design) is shown adjacent to an item, that item should be considered during the design phase of the project. Appendix IV provides a summary checklist that may be helpful when designing a minimum best practice ventilation system, but does not replace the guide.

The exhaust-only ventilation approach is organized in four sets of requirements: general, whole-building ventilation, local ventilation exhaust, and other.

General Requirements:

☐ The ventilation system's design requirements are shown on the building design drawings utilizing noteblocks, sheet notes, schedules, or other means of written communication that describe the requirements for ventilation airflow, fan selection and room location, and duct sizing for Whole-Building Ventilation and Local Ventilation Exhaust. In all cases, Table 7.1 shall be placed on the plans to specify duct sizing requirements that must be met in the field to comply with *ASHRAE 62.2* exhaust-only ventilation. This makes it possible for changes to be made in the field to accommodate conditions that may not be known at the design/permit stage and still comply with the *ASHRAE 62.2* requirements. Documentation describing ventilation system controls and labeling, and other indoor air quality measures may also be required. See the sample noteblocks in Appendix II of this Guide. (Design)

☐ Prescriptive Ventilation System Inspection. Prior to final inspection, the ventilation system has been visually inspected by the contractor/installer to confirm that it meets the prescriptive duct sizing requirements and fan ratings given in Table 7.1 of *ASHRAE 62.2* (see Appendix I of this guide), and this information has been included on the Installation Certificate, (CF-6R-MECH-05);

OR

☐ Performance Ventilation System Testing. Prior to final inspection, the required minimum airflow has been confirmed by testing the delivered ventilation airflow of the installed system using a flow hood or other airflow measuring device, and this information has been included on the Installation Certificate (CF-6R-MECH-05).[1]

☐ An Installation Certificate (CF-6R-MECH-05) has been completed by the builder/installer, and is posted or available at the building site for final inspection. The builder/installer signature on the CF-6R-MECH-05 for the building certifies that the building complies with the ventilation and indoor air quality requirements of the *Standards*.

Whole-Building Ventilation Requirements [*ASHRAE 62.2*, Section 4]:

Whole-Building Ventilation provides outdoor air ventilation for the entire building as contrasted with Local Ventilation Exhaust for kitchens and bathrooms, which is discussed in the next section of this guide. The most common solution for compliance using the exhaust-only approach is expected to be the installation of a quiet ceiling-mounted bathroom exhaust fan, remote-mounted inline fan, or exterior-mounted exhaust fan. Either the airflow of a single fan or the sum of the airflows from multiple fans can be used to meet the whole-building total airflow requirement.

Compliance with the *Standards* can be shown by using either the prescriptive or the performance approach. If the performance approach is used, the Indoor Air Quality (IAQ) exhaust fan system must be specified as an input to the compliance software, and that system type reported on the performance CF-1R.[2] For the prescriptive compliance approach, specification of the ventilation system type is not required on the CF-1R.

☐ The *ASHRAE 62.2* whole-building airflow equation 4.1a (Appendix I, item I.1) has been used to calculate the required whole-building ventilation airflow rate, and it is indicated on the

[1] Note: Although not required, measurement of the actual system airflow is the recommended way to demonstrate compliance with the requirements of both whole-building ventilation and local ventilation exhaust.
[2] Exhaust ventilation system type terminology may vary with the different compliance software programs.

plans. For projects using the performance method of compliance, the required whole-building airflow rate is reported on the Certificate of Compliance (CF-1R). (Design)

The required whole-building airflow rate = _____ cfm

☐ For additions over 1,000 sf of conditioned floor area (CFA), the whole-building ventilation airflow rate has been calculated based on the CFA of the existing dwelling plus the addition. (Design)

☐ The ceiling mounted whole-building ventilation fan has a sound rating of one sone or less at the required ventilation airflow rate. (Design)

Note: *A remote-mounted inline fan, or exterior-mounted exhaust fan with a minimum of 4 feet of duct between the fan and intake grille, does not require a sound rating.*

☐ The exhaust fan control(s) used for whole-building continuous operation is labeled to communicate the required continuous building ventilation function and importance with a statement to make clear how the control (e.g., on/off switch) is to be operated. At a minimum, the label should communicate: "to maintain minimum levels of outside air ventilation required for good health, the fan control should be on at all times when the building is occupied, unless there is severe outdoor air contamination." It is recommended that the label text should be in bold type, placed on a white background, and no smaller than the equivalent of Arial 12 point type. (Design)

Sample: **To maintain minimum levels of outside air ventilation required for good health, the fan control should be on at all times when the building is occupied, unless there is severe outdoor air contamination.**

Systems for which compliance is confirmed to meet Prescriptive Ventilation System Inspection design criteria comply with the following:

☐ The exhaust fan(s) used for continuous whole-building ventilation is rated by the Home Ventilation Institute (HVI)[3] to provide at least the required ventilation rate at a minimum static pressure of 0.25 inches of water column (in. w.c.). (Design)

☐ The duct design for the whole-building ventilation system meets the requirements of Table 7.1 (Appendix I, item I.3). (Design)

Local Ventilation Exhaust Requirements [*ASHRAE 62.2*, Section 5]:

In addition to meeting the Whole-Building Ventilation Requirements discussed in the previous section, *ASHRAE 62.2* requires that each kitchen and bathroom have a local ventilation exhaust system installed that exhausts indoor air to outside the dwelling. The Local Ventilation Exhaust Requirements in one room can be met by a Whole-Building Ventilation exhaust system installed in that room (in this case Local Ventilation Exhaust systems would still have to be installed in other kitchens and bathrooms where the Whole-Building Ventilation exhaust system is not installed.) Use of operable windows is not allowed for meeting the local ventilation exhaust

[3] To select fans that meet these criteria, use the HVI certified fan products directory at www.hvi.org.

requirements in kitchens and bathrooms. Local ventilation exhaust systems may operate intermittently or continuously according to *ASHRAE 62.2*; however, at a minimum, this Guide assumes that intermittent exhaust fan operation is used, except for the case where an exhaust fan provides both the continuous exhaust to meet the Whole-Building Ventilation System Requirements and the Local Ventilation Exhaust Requirements in one room .

☐ The kitchen hood(s) deliver ventilation airflow at 100 or more cfm.[4,5] (Design)

☐ All bathroom exhaust fans deliver ventilation airflow at 50 or more cfm for each bathroom.[6] (Design)

☐ All ceiling mounted intermittent local ventilation fans have a sound rating of three sones or less at the required airflow rate.[7] (Design)

Note: *A remote-mounted inline fan or exterior mounted exhaust fan with a minimum of 4 feet of duct between the fan and intake grille do not require a sound rating.*

☐ All intermittent local ventilation exhaust fans have been designed to be operated as needed by the occupant. At a minimum, a wall switch may be used. Alternatively, some other type of control such as shut off timers, humidity sensors, or occupancy sensors may be used. (Design)

Systems for which compliance is confirmed to meet the Prescriptive Ventilation System Inspection design criteria must also comply with the following:

☐ All exhaust fans used for intermittent local ventilation are rated by the HVI to provide at least the required ventilation rate at a minimum static pressure of 0.25 in. w.c. (Design)

☐ All duct designs for intermittent local ventilation meet the requirements of Table 7.1 (Appendix I, item I.3). (Design)

Other Requirements [*ASHRAE 62.2*, Section 6]:

The items listed below (6.1 through 6.8) correspond to the "Other Requirements" of *ASHRAE 62.2*, Section 6, and all Section 6 requirements must be met. Other applicable *California Building Code* (*CBC*) requirements must also be met as noted. Refer also to Section 4.6.5 of the *2008 Residential Compliance Manual* for information describing these "Other Requirements".

6.1. Transfer Air

Dwelling units shall be designed and constructed to provide ventilation air directly from the outdoors and not as transfer air from adjacent dwelling units or spaces, such as garages, unconditioned crawl spaces, or unconditioned attics.

Section 6.1 does not prohibit whole-building exhaust or local exhaust ventilation systems and does not require mechanical systems to maintain pressure relationships with adjacent spaces except as specified in Section 6.4.

---

[4] A kitchen [for purposes of indoor air quality requirements] is any room containing cooking appliances.
[5] Recirculating range hoods that do not exhaust pollutants to the outside cannot be used to meet the requirements of *ASHRAE 62.2*.
[6] A bathroom [for purposes of indoor air quality requirements] is considered a room containing a bathtub, shower, spa or other similar source of moisture. Note that a room containing only a toilet is not required to meet the Local Ventilation Exhaust Requirements.
[7] Fans that have a maximum rated airflow that exceeds 400 cfm do not require a sound rating.

☐ Measures consistent with the requirements of *Standards* Section 117 (Residential Compliance Manual Section 3.5) have been taken to prevent air movement between adjacent dwelling units (e.g., through party walls), and between the dwelling unit and other spaces that are either vertically or horizontally adjacent, such as garages, unconditioned crawl spaces, or unconditioned attics. All cracks, voids, and air leakage points have been filled; and all seams in plasterboard surfaces have been taped and sealed. (Design)

6.2 Instructions and Labeling

Compliance, operating, maintenance, and ventilation information on the ventilation approach being used and the expected performance of the system must be provided to the dwelling owner as specified in Section 10-103(b) of the *Standards*. This information can be in paper or electronic format.

☐ Compliance forms and system manuals, brochures and cut sheets, or other ventilation system information have been provided to the dwelling owner to describe proper operation and maintenance of the system, the approach being used for ventilation, the expected system performance and required actions to maintain system performance, including the Minimum Efficiency Reporting Value (MERV) filter requirements in Section 6.7 of this guide.

Note: *The ASHRAE Homeowner's Operations and Maintenance Documentation form presented in Appendix III may be used to provide some of the required information.*

Note: *The labeling requirements for the whole-building ventilation control are described in the* Whole-building Ventilation Requirements *section of this Guide.*

6.3 Clothes Dryers

☐ All clothes dryers must be exhausted directly to the outdoors (*California Mechanical Code* [*CMC*] 905.2). (Design)

6.4 Combustion and Solid-Fuel Burning Appliances

☐ Combustion and solid-fuel burning appliances are provided with adequate combustion and ventilation air, and vented in accordance with the appliance manufacturer's installation instructions and the *CMC*.

☐ If an atmospherically vented appliance (e.g., gas furnace or water heater), or solid fuel appliance (e.g., fireplace) is inside the building pressure boundary, the total net exhaust of the two largest exhaust fans (with both fans operating at full capacity) does not exceed 15 cfm per 100 sf of occupiable space. (Design)

6.5 Garages

☐ To prevent migration of contaminants from the garage to adjacent occupiable spaces, and in addition to the requirements specified in 6.1, doors between the garage and dwelling unit are gasketed and weather stripped. (Design)

☐ HVAC systems that include air handlers or return ducts located in the garage, have been sealed to less than 6 percent of total fan airflow and verified by a HERS rater as specified by *Standards* Section 151(f)10. (Design)

6.6 Ventilation Opening Area[8] (for operable windows, skylights, through-the-wall-inlets, or other operable openings to the outside)

☐ Habitable spaces have an operable ventilation opening area equal to at least 4% of the room floor area (sf), but not less than 5 sf. For habitable spaces where it is not possible to provide the minimum Ventilation Opening Area to the outside, the opening to the adjoining rooms is unobstructed as specified in Section 1203.4.1.1. of the *CBC*, and the dwelling total operable opening area to the outdoors, based on the total occupiable floor area, meets the requirements of Section 1203.4.1 of the CBC. (Design)

☐ Toilet and utility rooms have ventilation openings with an operable area of not less than 4% of the room floor area (sf), nor less than 1.5 sf. Toilet and utility rooms that meet Local Ventilation Exhaust Requirements are not required to meet this Ventilation Opening Area requirement. Utility rooms with ducted dryer exhaust and toilet compartments in bathrooms are also not required to meet the minimum Ventilation Opening Area requirement. (Design)

6.7 Minimum Filtration

☐ Mechanical systems that supply air to an occupiable space through ductwork exceeding 10 feet in length and through a thermal conditioning component (e.g., heating/cooling coil) are provided with a filter having a minimum efficiency rating of MERV 6. The air filter provided is selected and sized to operate at a clean filter pressure drop no greater than 0.1 in. w.c.. The filter is installed in a manner that makes it accessible to the occupant for regular maintenance, consistent with *CMC* Section 305. (Design)

☐ Information describing the air filter selected for the building ventilation system, its location, maintenance, and replacement requirements are included in the compliance, operation, maintenance, and ventilation information provided to the owner according to Section 6.2 above.

6.8 Air Inlets (all operable ventilation openings)

☐ Any air inlets that are part of the ventilation design are located a minimum of 10 feet from known sources of contamination, such as stack, vent, exhaust hood, or vehicle exhaust. (Design)

☐ Ventilation openings (such as windows) are readily accessible and readily controllable by the building occupants consistent with the *CBC* (1203.4). (Design)

☐ Where ventilation openings are covered by louvers or are otherwise obstructed, the openable area is based on the free unobstructed area through the opening. (Design)

Note: *For additional information concerning these "Other Requirements," including any additional exceptions that may not have been covered in this Minimum Best Practice Guide, refer to the Residential Compliance Manual or contact the Energy Standards Hotline at (800) 772-3300.*

[8] Ventilation openings must be provided to serve as back-up ventilation if the mechanical ventilation system becomes disabled (e.g., power failure).

Appendix I: Fan and Duct Sizing Calculations

The process for exhaust-only ventilation system design is to: (1) determine the minimum amount of airflow required: (2) select a fan or multiple fans that are rated to provide ventilation airflow that equals or exceeds the minimum required; and (3) design and install a ventilation duct system that meets the requirements of *ASHRAE 62.2* Table 7.1.

(I.1) Whole-Building Ventilation Requirement Calculations

Equation 4.1a (from *ASHRAE 62.2*):

$$Q_{fan} = 0.01xA_{floor} + 7.5x(N_{br} + 1)$$

Where:

A_{floor} = conditioned floor area, ft²
N_{br} = number of bedrooms; not to be less than one
Q_{fan} = ventilation airflow requirement = minimum fan airflow rating, (cfm)

Example:

2,500 sf CFA house with 5 bedrooms
$Q_{fan} = 0.01x2500 + 7.5x(5 + 1) = 70$ cfm

(I.2) Local Ventilation Exhaust Requirement Calculations

This Minimum Best Practices Guide provides information for intermittent fan operation only for local ventilation exhaust systems. The minimum airflow rates for intermittent local ventilation exhaust are specified in Table 5.1 of *ASHRAE 62.2*. The required minimum intermittent local ventilation exhaust airflow rate for bathrooms is 50 cfm. The minimum intermittent ventilation exhaust airflow rate for kitchens is 100 cfm.

(I.3) Prescriptive Duct Sizing Calculations

Prescriptive duct sizing can be utilized to demonstrate compliance with the ventilation airflow requirement through inspection of the installed whole-building ventilation system, or local ventilation exhaust system, to confirm conformance with the requirements of Table 7.1. Instructions for the use of Table 7.1 and example calculations are provided below.

TABLE 7.1 PRESCRIPTIVE DUCT SIZING REQUIREMENTS (FROM *ASHRAE 62.2*)								
Duct Type	Flex Duct				Smooth Duct			
Fan Rating (cfm at 0.25 in. w.g.)	50	80	100	125	50	80	100	125
	Maximum Allowable Duct Length (ft)							
Diameter, (in)	Flex Duct				Smooth Duct			
3	X	X	X	X	5	X	X	X
4	70	3	X	X	105	35	5	X
5	NL	70	35	20	NL	135	85	55
6	NL	NL	125	95	NL	NL	NL	145
7 and above	NL	NL	NL	NL	NL	NL	NL	NL
This table assumes no elbows. Deduct 15 ft of allowable duct length for each turn, elbow, or fitting. Interpolation and extrapolation in Table 7.1 is not allowed. For fan rating values not listed, use the next higher value. This table is not applicable for fan ratings > 125 cfm. NL = no limit on duct length of this size. X = not allowed, any length of duct of this size with assumed turns and fittings will exceed the rated pressure drop (0.25 in w.g.). Note: water gauge (w.g). is the same as water column (w.c.)								

a) Determine the duct material that will be used for the installation (smooth or flex). Duct sizing will use the Table 7.1 columns under the selected type of duct.

b) Identify the fan rating(s) used to provide whole-building and local ventilation exhaust (cfm).

c) Select the column that corresponds to the required fan rating for the system. If the required fan rating (airflow cfm) is not shown on the chart and falls between columns, use the next highest fan rating column for determining the duct length and diameter. The Table is not applicable to fan ratings greater than 125 cfm.

d) Select the preferred duct diameter to determine the corresponding maximum allowable duct length from the fan rating column for each exhaust fan. For each turn, elbow or fitting in the duct run, subtract 15 feet of length from the allowable duct length specified in the Table. If the allowable length of (straight) duct is not sufficient for the design, select the next higher diameter of duct, and recalculate the allowance. An "NL" in the table indicates that any length of duct for that diameter is in compliance.

Examples:

Example 1: For a 50 cfm fan using 4” flex duct, the length can be a maximum of 70 feet (ft) of straight duct without elbows.

Example 2: For an 80 cfm fan using 4” flex duct, the length would be limited to 3 ft of straight duct without elbows.

Example 3: For the Equation 4.1a example shown above in Appendix I, item I.1, assume smooth duct will be used, there will be 3 elbows, and there is 40 ft. of straight duct required to run a duct from the fan to the exterior of the building. The determined fan rating (70 cfm) is not on the chart, so use the next highest column that is greater than 70 cfm – use the 80 cfm column. Since the system requires 3 elbows, 45 ft. must be subtracted from the values in the table. For smooth ducts in the 80 cfm column, 4-inch duct has a maximum allowable duct length of 35 ft. (too short). 5-inch duct has an allowable straight length of 135 ft. from which the allowance for elbows (3 x 15 = 45 ft) must be subtracted (135 – 45 = 90 ft.). Since the allowable length (90 ft.) is greater than the required length (40 ft) this combination of duct material, duct diameter, duct length and number of elbows meets the Table 7.1 duct sizing requirement.

Appendix II: Sample Noteblocks

Noteblocks, sheet notes, schedules or other forms of written communication that specify the requirements for ventilation airflow, the rooms where the whole-building and local ventilation exhaust fans are located, and duct sizing for Whole-Building Ventilation and Local Ventilation exhaust shall be specified on the plans submitted to the enforcement agency for a building permit. However, in all cases, Table 7.1 shall be placed on the plans to allow for duct changes that may be required during construction of the system.

The following sample noteblocks may be placed on the building design plans to meet the requirements for submittal of the ventilation system specifications to the enforcement agency.

WHOLE-BUILDING VENTILATION REQUIREMENTS (FROM *ASHRAE 62.2*)		
AT LEAST ONE MECHANICALVENTILATION SYSTEM IN THE BUILDING MUST BE DESIGNATED FOR USE IN COMPLIANCE WITH THE WHOLE-BUILDING VENTILATION REQUIREMENT. ALTERNATIVELY, THE SUM OF THE RATED AIRFLOWS FROM MULTIPLE FANS CAN BE UTILIZED TO MEET THE REQUIRED WHOLE-BUILDING VENTILATION AIRFLOW. THE SYSTEM(S) MUST DELIVER CONTINUOUS VENTILATION AIRFLOW AT A RATE GREATER THAN OR EQUAL TO THE RATE SPECIFIED IN EQUATION 4.1 a, AND FAN SONE RATINGS MUST NOT EXCEED 1.0. FOR DWELLING OCCUPANT DENSITIES KNOWN TO BE GREATER THAN (N_{BR} + 1), THE RATE SHALL BE INCREASED BY 7.5 CFM FOR EACH ADDITIONAL PERSON.		
(Eq. 4.1a) $Q_{fan} = 0.01A_{floor} + 7.5(N_{br} + 1)$	Where: A_{floor} = conditioned floor area, ft^2 N_{br} = number of bedrooms; not to be less than one Q_{fan} = ventilation air requirement = fan flow rate, (cfm)	Eq 4.1a Calculation: A_{floor} = N_{br} = Q_{fan} =

LOCAL VENTILATION EXHAUST REQUIREMENTS (FROM *ASHRAE 62.2*)		
LOCAL MECHANICAL EXHAUST FANS SHALL BE INSTALLED IN EACH KITCHEN AND BATHROOM ACCORDING TO THE REQUIREMENTS OF *ASHRAE 62.2*. THE MINIMUM AIRFLOW RATES SHALL BE GREATER THAN OR EQUAL TO THE AMOUNT INDICATED IN TABLE 5.1 BELOW AND FAN SONE RATINGS MUST NOT EXCEED 3.0.		
TABLE 5.1 **MINIMUM INTERMITTENT LOCAL VENTILATION EXHAUST AIRFLOW RATES**		
APPLICATION	AIRFLOW	NOTES
KITCHEN	100 CFM	VENTED RANGE HOOD REQUIRED IF EXHAUST FAN FLOWIS LESS THAN 5 ACH.* IF THE RANGE HOOD IS USED FOR LOCAL EXHAUST IT MUST BE VENTED TO THE OUTDOORS
BATHROOM	50 CFM	

* Air Changes per Hour (ACH), which is determined by multiplying the volume of the space by five (5) ACH = cubic feet per hour, and then dividing by 60 minutes per hour to determine the cubic feet per minute (cfm).

PRESCRIPTIVE DUCT SIZING REQUIREMENTS (FROM *ASHRAE 62.2*)

IN ORDER TO COMPLY WITH THE PRESCRIPTIVE DUCT SIZING REQUIREMENTS OF *ASHRAE 62.2*, A VENTILATION FAN MUST BE SELECTED THAT IS RATED TO PROVIDE AT A MINIMUM THE REQUIRED VENTILATION AIRFLOWAT 0.25 IN. W.G. AND THE DUCTS MUST BE SIZED IN ACCORDANCE WITH THE SPECIFICATIONS GIVEN IN TABLE 7.1, BELOW.

TABLE 7.1

Duct Type	Flex Duct				Smooth Duct			
Fan Rating (cfm at 0.25 in. w.g.)	50	80	100	125	50	80	100	125
	Maximum Allowable Duct Length (ft)							
Diameter, (in)	Flex Duct				Smooth Duct			
3	X	X	X	X	5	X	X	X
4	70	3	X	X	105	35	5	X
5	NL	70	35	20	NL	135	85	55
6	NL	NL	125	95	NL	NL	NL	145
7 and above	NL	NL	NL	NL	NL	NL	NL	NL

This table assumes no elbows. Deduct 15 ft of allowable duct length for each turn, elbow, or fitting. Interpolation and extrapolation in Table 7.1 is not allowed. For fan ratings not listed, use the next higher value. This table is not applicable for fan ratings > 125 cfm.
NL = no limit on duct length of this size.
X = not allowed, any length of duct of this size with assumed turns and fittings will exceed the rated pressure drop (0.25 in w.g.)
Note: water gauge (w.g). is the same as water column (w.c.)

OTHER REQUIREMENTS FOR INDOOR AIR QUALITY (FROM *ASHRAE 62.2*)

THE BUILDING MUST COMPLY WITH THE “OTHER REQUIREMENTS” SPECIFIED IN *ASHRAE 62.2* SECTIONS 6.1 THROUGH 6.8.

6.1 TRANSFER AIR
6.2 INSTRUCTIONS AND LABELING
6.3 CLOTHES DRYERS
6.4 COMBUSTION AND SOLID-FUEL BURNING APPLIANCES
6.5 GARAGES
6.6 VENTILATION OPENING AREA
6.7 MINIMUM FILTRATION
6.8 AIR INLETS

Appendix III: Homeowner's Operations and Maintenance Documentation Form

(*ASHRAE 62.2*)

HOMEOWNERS OPERATIONS AND MAINTENANCE DOCUMENTATION FORM

Installer Information:

Company Name _____ Date Installed: _____

Address _____ Date Serviced: _____

_____ Date Serviced: _____

_____ Date Serviced: _____

Phone: _____ Date Serviced: _____

Whole-Building Ventilation System Type: _____

_____

_____

Whole-Building Ventilation Operating Instructions and Schedule: _____

_____

_____

_____

Required Maintenance (annual or seasonal recommended as a minimum):

_____

_____

_____

Ventilation Equipment and/or Devices:

Equipment	Model	Manufacturer
_____	_____	_____
_____	_____	Phone: _____
_____	_____	_____
_____	_____	Phone: _____
_____	_____	_____
_____	_____	Phone: _____
_____	_____	_____
_____	_____	Phone: _____
_____	_____	_____
_____	_____	Phone: _____
_____	_____	_____
_____	_____	Phone: _____

Appendix IV: Summary Checklist for *ASHRAE 62.2* Minimum Best Practices Guide Exhaust-Only Ventilation

General Requirements:

☐ Design requirements shown on building design drawings
☐ Compliance with the ventilation airflow requirements demonstrated by:
  ☐ Prescriptive Ventilation System Inspection. Visually inspecting prescriptive duct sizing and fan ratings

  OR

  ☐ Performance Ventilation System Testing. Testing to confirm the delivery of the minimum ventilation airflow
☐ Complete, sign and make an Installation Certificate (CF-6R-MECH-05) available at the site

Whole-Building Ventilation:

☐ Whole-building exhaust ventilation system meets the required whole-building ventilation airflow, which is _____ cfm
☐ Whole-building exhaust fan(s) has a sound rating of one sone or less at the required ventilation airflow rate
☐ Whole-building exhaust fan control(s) is labeled as to function and importance
For systems complying with the Prescriptive Ventilation System Inspection requirements:
☐ Whole-building exhaust fan(s) is rated to provide at least the minimum ventilation rate at a minimum static pressure of 0.25" w.c.
☐ Whole-building ventilation duct design meets requirements of Table 7.1

Local Ventilation Exhaust:

☐ Kitchen hood delivers ventilation airflow of at least 100 cfm
☐ Kitchen fan(s) exhausted to exterior
☐ All bathroom exhaust fans deliver ventilation airflow of at least 50 cfm for each bathroom
☐ All local exhaust fans have a sound rating of three sones or less at the required ventilation airflow rate
☐ All intermittent local exhaust fans have been designed to be operated as needed by the occupant (such as wall switch, shut-off timer, humidistat or occupancy sensor)
For systems complying with the Prescriptive Ventilation System Inspection requirements:
☐ All local exhaust fans are rated to provide at least the minimum ventilation rate at a minimum static pressure of 0.25" w.c.
☐ All local ventilation duct designs meet the requirements of Table 7.1

Other Requirements:

6.1 Transfer Air

☐ Measures have been taken to prevent air movement between dwelling units and between dwelling units and other adjacent spaces.

6.2 Instructions and Labeling

☐ Compliance forms and information describing the approach, operation, maintenance and expected performance of the ventilation system has been provided to the owner.

6.3 Clothes Dryers

☐ All clothes dryers are exhausted directly to the outdoors.

6.4 Combustion and Solid-Fuel Burning Appliances

☐ If atmospherically-vented or solid-fuel appliances are inside the building pressure boundary, the total net exhaust of the two largest exhaust fans (at full capacity) does not exceed 15 cfm per 100 sf of occupiable space.

6.5 Garages

☐ In addition to 6.1, doors between garage and dwelling unit must be gasketed and weather stripped.

☐ HVAC systems with air handlers or return ducts in the garage are sealed to less than 6% leakage of total fan airflow and verified by HERS rater.

6.6 Ventilation Opening Area (for operable windows, skylights, through-the-wall-inlets, or other operable openings to the outside)

☐ Habitable spaces have a ventilation opening area no less than 4% of room floor area nor less than 5 sf.

☐ Toilet and utility rooms not meeting local exhaust ventilation requirements have operable window area no less than 4% of room floor area nor less than 1.5 sf.

6.7 Minimum Filtration

☐ Mechanical systems supplying air to occupiable space through a thermal conditioning component (e.g., heating/cooling coil) and with duct run greater than 10 ft must have a filter:

- ☐ With a minimum efficiency of MERV 6.
- ☐ Sized to operate with a clean filter pressure drop no greater than 0.1” w.c.
- ☐ Information provided to owner that describes filter location, maintenance and replacement requirements.

6.8 Air Inlets (all operable ventilation openings)

☐ Any air inlets that are part of the ventilation system are located a minimum of 10 ft away from known sources of contamination (e.g., stack, vent, exhaust hood, or vehicle exhaust).

☐ Ventilation openings are readily accessible and controllable by occupant.

☐ Where ventilation openings are covered or obstructed, the openable area is based on the free, unobstructed area through the opening.