2008 BUILDING ENERGY EFFICIENCY STANDARDS

CALIFORNIA ENERGY COMMISSION

COMMISSION SECOND DRAFT MANUAL

NONRESIDENTIAL COMPLIANCE MANUAL

CEC-400-2008-017-D2
October 2008

Arnold Schwarzenegger
Governor

CALIFORNIA ENERGY COMMISSION

Energy Commission Staff
and Consultants
Principal Authors

Maziar Shirakh
Buildings and Appliance Office
Project Manager

G. William Pennington
Office Manager
Buildings and Appliance Office

Valerie T. Hall
Deputy Director
Efficiency and Renewable Energy

Melissa Jones
Executive Director

DISCLAIMER

This report was prepared by staff of the California Energy Commission. It does not necessarily represent the views of the Energy Commission, its employees, or the State of California. The Energy Commission, the State of California, its employees, contractors, and subcontractors make no warrant, express or implied, and assume no legal liability for the information in this report; nor does any party represent that the uses of this information will not infringe upon privately owned rights. This report has not been approved or disapproved by the California Energy Commission nor has the California Energy Commission passed upon the accuracy or adequacy of the information in this report.

Acknowledgments

The Building Energy Efficiency Standards (Standards) were first adopted and put into effect in 1978 and have been updated periodically in the intervening years. The Standards are a unique California asset and have benefitted from the conscientious involvement and enduring commitment to the public good of many persons and organizations along the way. The 2008 Standards development and adoption process continued that long-standing practice of maintaining the Standards with technical rigor, challenging but achievable design and construction practices, and public engagement and full consideration of the views of stakeholders.

The revisions in the 2008 Standards were conceptualized, evaluated and justified through the excellent work of Energy Commission staff and consultants working under contract to the Energy Commission, Pacific Gas and Electric Company, Southern California Edison Company, San Diego Gas and Electric Company, and Southern California Gas Company. At the California Energy Commission, Maziar Shirakh PE, served as the project manager and senior engineer. Bill Pennington, Manager of the Buildings and Appliances Office, provided overall guidance to the staff and consultants. Valerie Hall, Deputy Director of the Energy Efficiency and Renewable Division provided policy guidance to the Staff. William Staack and Dick Ratliff provided legal counsel to the staff. Other key technical staff contributors included Jeff Miller PE, Gary Flamm, Bruce Maeda, Payam Bozorgchami, Tav Commins, Rob Hudler, Alan Marshall, and Nelson Pena. Additional staff input and assistance came from Chris Gekas, Suzie Chan, Martha Brook PE, Smita Gupta, Claudia Orlando, Chris Olvera, Beverly Duffy, and the Commission's Web Team. Key consultants included Architectural Energy Corporation, Bruce Wilcox, Taylor Engineering, Proctor Engineering, Benya Lighting Design, Chitwood Energy Management, Davis Energy Group, EnerComp, and E3. The Heschong Mahone Group served as the PG&E's prime consultant.

The Commission dedicates the adoption of the 2008 Building Energy Efficiency Standards to Jon Leber, PE, (November 13, 1947 - February 14, 2008) for his 30 years of dedication to excellence in the development and implementation of the most energy efficient building standards in the country and a model for others to follow. He was the utmost public servant.

1. Introduction

1.1 Organization and Content

This manual is designed to help owners, designers, builders, inspectors, examiners, and energy consultants comply with and enforce California's energy efficiency standards for nonresidential buildings. The manual is written as both a reference and an instructional guide and can be helpful for anyone that is directly or indirectly involved in the design and construction of energy efficient nonresidential buildings.

~~Eight~~ Ten chapters make up the manual:

- This chapter (Chapter 1) introduces the Standards and discusses the application and scope.
- Chapter 2 reviews the compliance and enforcement process, including design and the preparation of compliance documentation through acceptance testing.
- Chapter 3 addresses the requirements for the design of the building envelope.
- Chapter 4 covers the requirements for HVAC systems and water heating systems.
- Chapter 5 addresses the requirements for indoor lighting.
- Chapter 6 addresses the requirements for outdoor lighting ~~and signs (for both indoor and outdoor applications).~~
- Chapter 7 addresses the requirements for sign lighting (for both indoor and outdoor applications).
- Chapter 8 addresses the requirements for refrigerated warehouses.
- Chapter 9 covers the whole building performance approach.
- Chapter 10 addresses the acceptance requirements.

Cross-references within the manual use the word 'Section' while references to sections in the Standards are represented by "§."

1.2 Related Documents

This manual is intended to supplement ~~three~~ several other documents that are available from the California Energy Commission (Energy Commission). These are:

- The Standards. This manual supplements and explains California's energy efficiency standards for buildings; it does not replace them. Readers should have a copy of the Standards to refer to while reading this manual.

DRAFT

- ~~Joint~~ The Reference Appendices:~~.~~ ~~The Reference Appendices joint appendices to the Residential and Nonresidential Alternate Calculation Method (ACM) manuals contain information that is common to both the residential and nonresidential Standards, which has three main subsections: Reference Joint Appendices, Reference Residential Appendices, and Reference Nonresidential Appendices.~~.
    - Reference Joint Appendices contain information that is common to both residential and nonresidential buildings.~~Joint Appendix I is a glossary of terms~~.
    - *Reference Residential Appendices contain information that is for residential buildings only*~~Joint Appendix II summarizes the climate zones and design conditions in California cities~~.
    - *Reference Nonresidential Appendices contain information that is for nonresidential buildings only*~~Joint Appendix III is a summary of time dependent valuation (TDV), the new currency for performance calculations~~.
- ~~Joint Appendix IV contains thermal performance data for wall, roof and floor constructions that must be used in calculations.~~
- The Nonresidential ACM Manual. The Nonresidential ACM Manual is primarily a specification for computer software that is used for compliance purposes~~; however, the appendices contain procedures for acceptance testing and field verification and/or diagnostic testing of air distribution ducts. Of special note is ACM Manual Appendix NB-2005, which contains data on the power used for lamp and ballast combinations.~~

Note: High-rise residential and hotel/motel occupancies – For these occupancies location and design data, opaque assembly properties are located in the Reference Joint Appendices; while mechanical and lighting information is located in the Reference Nonresidential Appendices. Water heating information is located in the Residential ACM Manual.

DRAFT

Material from these other documents is not always repeated in this manual. However, if you are using the electronic version of the manual, there are often hyperlinks in this document that will take you directly to the document that is referenced.

1.3 The Technical Chapters

Each of the ~~four~~ five technical chapters (3 through ~~6~~7) begins with an overview, which is followed by a presentation of each subsystem. For the building envelope, subsystems include fenestration, insulation, infiltration, etc. For HVAC, the subsystems include heating equipment, cooling equipment, and ducts. Mandatory measures and prescriptive requirements are described within each subsystem or component. These determine the stringency of the Standards and are the basis of the energy budget when the performance method is used.

1.4 Why California Needs Energy Standards

Energy efficiency reduces energy costs for owners, increases reliability and availability of electricity for the State, improves building occupant comfort, and reduces environmental impact.

Energy Savings

Reducing energy use is a benefit to all. Building owners save money, Californians have a more secure and healthy economy, the environment is less negatively impacted, and our electrical ~~system~~ grid can operate in a more stable state. The ~~2005~~ 2008 Standards (for residential and nonresidential buildings) are expected to reduce the growth in electricity use by ~~478~~561 gigawatt-hours per year (GWh/y) and reduce the growth in gas use by ~~8.8~~19.0 million therms per year (therms/y). The savings attributable to new nonresidential buildings are ~~163.2~~459 GWh/y of electricity savings and ~~0.5~~11.5 million therms. ~~Additional~~ S~~s~~avings ~~result~~ from the application of the Standards on building alterations accounts for 270 GWh/y and 8.2 million therms.. ~~In particular, requirements for cool roofs, lighting and air distribution ducts are expected to save about 175 GWh/y of electricity.~~ These savings are cumulative, doubling in two years, tripling in three, etc. Figure 1-1 and Figure 1- show the components of these savings.

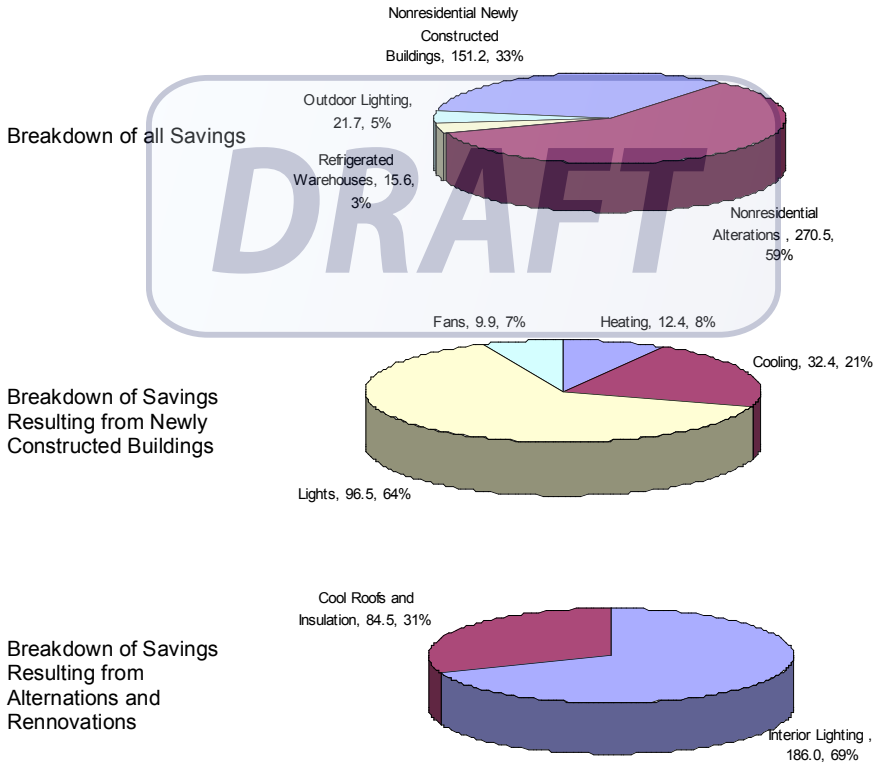

Figure 1-1 – Electricity Savings Related to the 2005 Standards

Breakdown of Savings

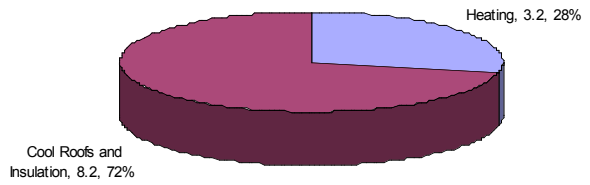

Figure 1-2 – Demand Savings Related to the 2005 Standards

Electricity Reliability and Demand

Buildings are one of the major contributors to electricity demand. We learned during the 2000/2001 California energy crisis, and the East Coast blackout in the summer of 2003, that our electric distribution network is fragile and system overloads caused by excessive demand from buildings can create unstable conditions. Resulting blackouts can seriously disrupt business and cost the economy billions of dollars.

Since the California electricity crisis, the Energy Commission has placed more ~~and more~~ emphasis on demand reduction~~s~~. The ~~Changes in~~ 2001 and 2005 standards resulted in ~~(following the electricity crisis) reduced electricity demand by about 150~~ 330 megawatts (MW) of demand reduction~~each year~~. The ~~2005~~ 2008 Standards are expected to reduce electric demand by another ~~180~~ 132 MW each year. Nonresidential buildings account for ~~44~~ 95 MW of these savings. Like energy savings, demand savings accumulate each year.

Breakdown of all Demand Reductions

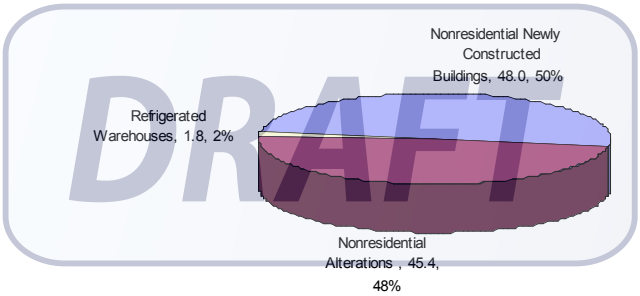

Breakdown of Savings Resulting from Newly Constructed Buildings

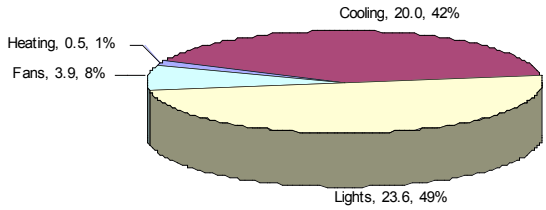

Figure 1-3 – Demand Savings Related to the 2005 Standards

Comfort

Comfort is an important benefit of energy efficient buildings. Energy efficient buildings include properly designed HVAC systems, which provide improved air circulation, and high performance windows and/or shading to reduce solar gains and heat loss. Poorly designed building envelopes result in buildings that are less comfortable. Oversized heating and cooling systems do not assure comfort even in older, poorly insulated and leaky buildings.

Economics

For the building owner, energy efficiency helps create a more profitable operation. From a larger perspective, the less California depends on depletable resources such as natural gas, coal and oil, the stronger and more stable the economy will remain in the face of energy cost increases. A cost-effective investment in energy efficiency helps everyone. In many ways, it is far more cost effective for the people of California to invest in saving energy than it is to invest in building new power plants.

Environment

~~In many parts of the world, the~~The use of energy has led to oil spills, acid rain, smog, and other forms of environmental pollution that have ruined the natural beauty people seek to enjoy. California is not immune to these problems, but appliance standards, building standards, and utility programs that promote efficiency and conservation help to maintain environmental quality. Other benefits include reduced destruction of natural habitats, which in turn helps protect animals, plants, and natural systems.

Greenhouse Gas Emissions and Global Warming

~~Experts believe that burning~~Burning fossil fuel is a major contributor to global warming; carbon dioxide is being added to an atmosphere already containing 25 percent~~%~~ more than it did two centuries ago. Carbon dioxide and other greenhouse gasses create an insulating layer around the earth that leads to global climate change. Energy Commission research shows that most of the sectors of the State economy face significant risk from climate change including water resources (from reduced snow pack), agriculture, forests, and the natural habitats of a number of indigenous plants and animals.

~~Scientists recommend that actions be taken to reduce emissions of carbon dioxide and other greenhouse gasses. While adding scrubbers to power plants and catalytic converters to cars is a step in the right direction, those actions do not limit the carbon dioxide we emit into the atmosphere. Using energy efficiently~~Energy efficiency is a far-reaching strategy that ~~can make~~is making an important contribution to the reduction of greenhouse gasses.

The National Academy of Sciences has urged the country to follow California's lead on such efforts, saying that conservation and efficiency should be the chief elements in energy and global warming policy. Their first efficiency recommendation was simple: Adopt nationwide energy efficient building codes. ~~Energy conservation will not only increase comfort levels and save California~~

money, but it will also play a vital role in creating and maintaining a healthy environment.

The standard is expected to have a significant impact on reducing greenhouse gas and other air emissions:. cCarbon dioxide, one of the more significant greenhouse gases, would be reduced by 473,000 tons first year of construction, cumulative each year thereafter. These estimates are based, when possible, on hourly emission rates for electricity use in southern and northern California. When savings estimates are made on an annual basis, average emission rates are used.

*1.5 What's New for 2005*2008

The process to develop the 2005 2008 Standards began with a call for ideas in November 2001winter of 2005, moved through a series of workshops and hearings in 2002 2005 through 2007 and 2003 and concluded at the adoption hearing on November 5, 2003April 23, 2008. Energy Commission staff, contractors, utilities and many others participated in the process. The following paragraphs summarize the principle changes that resulted.

All Buildings

- *Revisions to the: Administrative section§s 10-103.* These revisions to allow for electronic filing and compliance documentation maintenance for future use, Administrative §10-105 to clarify roles and responsibilities of state agencies for enforcement of the standards, and Administrative §10-113 to clarify requirements for low-sloped and steep-sloped roofs. Time Dependent Valuation (TDV). Source energy was replaced with TDV energy. TDV energy values energy savings greater during periods of likely peak demand, such as hot summer weekday afternoons, and values energy savings less during off peak periods. TDV gives more credit to measures such as daylighting and thermal energy storage that are more effective during peak periods.
- *Revisions and clarifications to Section§ 118, Mandatory Requirements for Insulation and Roofing Products*. These revisions include introduction of Solar Reflectance Index (SRI) for cool roof compliance. *New Federal Standards.* Coincident with the 2005 Standards, new standards for water heaters and air conditioners took effect. These changes affect all residential buildings, but also affect many nonresidential buildings that use water heaters and/or "residential size" air conditioners.
- *Revisions and clarifications to Section§ 119* , Mandatory Requirements for Lighting Control Devices. *New Lighting in Historic Buildings.* The exception to the Standards requirements for historic buildings has changed relative to lighting requirements so that only those historic or historic replica components are exempt.

Nonresidential Buildings

- *Roofing Products (Cool Roofs)*. The nonresidential prescriptive standards already require "cool roofs" (high reflectance, high emittance roof surfaces, or exceptionally high reflectance and low emittance surfaces) in all low-slope

DRAFT

applications. ~~These requirements have been updated to meet the 2008 Standards requirements.~~ The 2008 Standards ~~also~~ have new cool roof requirements for steep-slope roofs. ~~The cool roof requirements also apply to roof replacements for existing buildings.~~

- *Overall Building Envelope Method §143(b)*. The prescriptive overall building envelope method has been revised to combine heating and cooling and to provide simplified trade-offs for roofing alterations.
- *Site-Built Fenestration*. Changes to site-built fenestration requirements including the new NFRC Component ~~Method~~Modeling Approach (CMA) certification, new fenestration acceptance requirements and changes to CEC default values in ~~Section~~§-116 and Reference Nonresidential Appendix NA6 and NA7.4.
- *Insulation Levels §143(a)*. Revised prescriptive requirements for roof, wall, and floor insulation levels in certain climate zones,
- *Acceptance Requirements*. Basic "building commissioning", at least on a component basis, is required for electrical and mechanical equipment that is prone to improper installation. The mechanical acceptance requirements have been updated to meet the 2008 Standards requirements. There are also new acceptance requirements for envelope (fenestration) and outdoor lighting systems.
- *Demand Control Ventilation §121(c)*. Controls that measure CO_2 concentrations and vary outside air ventilation are required for spaces such as conference rooms, dining rooms, lounges, and gyms. The 2008 Standards expand~~s~~ the DCV requirements to multizone systems but exempt~~s~~ high occupant density spaces from these requirements, and add~~s~~ new requirements to ensure that adequate ventilation is provided to the spaces.
- *Refrigerated Warehouses §126*. New mandatory envelope, lighting, and mechanical requirements for refrigerated warehouses.
- *Water Heating §-113 and §-145*. New mandatory and prescriptive requirement for Hotel/Motel occupancies to use residential water heating models, and new prescriptive requirement for gas water heating in nonresidential buildings.
- *VAV systems §-144(L)*. New control requirements for single-zone variable (adjustable) air volume equipment.
- *Control Systems*. Expand direct digital control systems to zone level for HVAC systems (*§122*), including demand shedding controls (*§122*), hydronic pressure reset (*§144(j)*, VAV zone minimums (*§144(d)*, and supply air temperature reset *§144(f)*.

  ~~*T-bar Ceilings*. Placing insulation directly over suspended ceilings is not permitted as a means of compliance, except for limited applications.~~

  ~~*Relocatable Public School Buildings*. Special compliance approaches are added for relocatables so they can be moved anywhere statewide.~~

  ~~*Duct Efficiency*. R-8 duct insulation and duct sealing with field verification is required for ducts in unconditioned spaces in new buildings. Duct sealing is also required in existing buildings when the~~

DRAFT

~~air conditioner is replaced. Performance method may be used to substitute a high efficiency air conditioner in lieu of duct sealing.~~

- *Indoor Lighting.§-146.* The lighting power limits for some indoor lighting in the ~~a~~Area ~~c~~Category ~~functions area~~ and ~~c~~Complete ~~b~~Building type of uses are reduced in response to advances in lighting technology. New function areas and type of uses have been created. Updates for indoor lighting requirements for ~~t~~Tailored ~~m~~Method , including wall and floor display lighting,
- *Occupant Sensors §-131(d).* Added new requirements for occupant sensors in indoor areas, including offices less than 250 square feet, multipurpose rooms of less than 1000 square feet, and classrooms and conference rooms of any size,
- *Demand Response §131(g).* New demand response controls to reduce indoor lighting when signaled including load shedding ballasts.
- *Skylights for Daylighting in Buildings§131(c).* Low rise conditioned or unconditioned enclosed spaces that are greater than ~~25,000~~8,000 ft^2~~ft_2~~ directly under a roof with ceiling heights greater than 15 ft and have a lighting power density for general lighting equal to or greater than 0.5 W/ft^2~~ft_2~~ shall meet ~~section~~§~~s~~ 143(c)1-4.
- *Side-Lighting §131(c).* Updates to require automatic daylighting controls within day-lit areas near windows for some types of buildings. The definition of daylit area has been updated.
- ~~*Thermal Breaks for Metal Building Roofs.* Continuous insulation or thermal blocks at the supports are required for metal building roofs.~~
- ~~*Efficient Space Conditioning Systems.* A number of measures are required that improve the efficiency of HVAC systems, including variable speed drives for fan and pump motors greater than 10 hp, electronically commutated motors for series fan boxes, better controls, efficient cooling towers, and water cooled chillers for large systems.~~
- ~~*Unconditioned Buildings.* New lighting standards—lighting controls and power limits—applies to unconditioned buildings, including warehouses and parking garages. Lighting power tradeoffs are not permitted between conditioned and unconditioned spaces.~~
- ~~*Compliance Credits.* Procedures are added for gas cooling, underfloor ventilation.~~

DRAFT

~~***Outdoor Lighting***~~

- Outdoor lighting (*§-147)* LPDs have been revised to reflect new technologies and IESNA recommendations. Outdoor lighting compliance has been revised to introduce the "layered approach" to simplify compliance. ~~Lighting Power Limits. The Standards set limits on the power that can be used for outdoor lighting applications such as parking lots, driveways, pedestrian areas, sales canopies, and car lots. The limits vary by lighting zones or ambient lighting levels. Lighting power tradeoffs are not permitted between outdoor lighting and indoor lighting.~~
    - ~~*Shielding. Luminaires in hardscape areas larger than 175 W are required to be cutoff luminaires, which will save energy by reducing glare.*~~

- ~~*Bi-level Controls. In some areas outdoor lighting* controls are required, including the capability to reduce lighting levels to 50%.~~

~~***Signs***~~

- *Sign Lighting §148.* ~~*Lighting Power Limits.*~~ Lighting power limits (or alternative equipment efficiency requirements) apply to externally and internally illuminated signs used either indoors or outdoors. The list of alternative light sources has been expanded and reorganized to better reflect the state of technology.

1.6 Mandatory Measures and Compliance Approaches

In addition to the mandatory measures (Section 1.6.1), the Standards provide two basic methods for complying with nonresidential energy budgets: the prescriptive approach and the performance approach. The mandatory measures must be installed with either ~~of these~~method, but note that mandatory measures may be superseded by more stringent measures under the prescriptive or performance approach.~~The prescriptive approach (composed of prescriptive requirements described in Chapters 3, 4, 5, and 6) is the simpler approach of the two. Each individual energy component of the proposed building must meet a prescribed minimum efficiency. The prescriptive approach offers relatively little design flexibility but is easy to use. There is some flexibility for building envelope components, such as walls, where portions of the wall that do not meet the prescriptive insulation requirement may still comply as long as they are area-weighted with the rest of the walls, and the average wall performance complies.~~

~~The performance approach (Chapter 8) is more complicated but offers considerable design flexibility. The performance approach requires an approved computer software program that models a proposed building, determines it's allowed energy budget, calculates its energy use, and determines when it complies with the budget. Design options such as window orientation, shading, thermal mass, zonal control, and building configuration are all considered in the performance approach. This approach is used because of the flexibility and because it provides a way to find the most cost-effective solution for complying with the Standards.~~

~~For additions and alterations, see Chapter 8 for details of compliance approaches that are available.~~

DRAFT

1.6.1 Mandatory Measures

With either the prescriptive or performance compliance paths, there are mandatory measures that must always be met. Many of the mandatory measures deal with infiltration control, ~~and~~ indoor and outdoor lighting, or sign lighting; others mandatory measures require minimum insulation levels and equipment efficiency or requirements for refrigerated warehouses. The minimum mandatory levels are sometimes superseded by more stringent prescriptive or performance requirements. ~~For example, if mandatory measures specify R-19 ceiling insulation and the prescriptive approach specifies R-38 ceiling insulation,~~

~~then R-38 must be installed. Conversely, the mandatory measures may be of a higher efficiency than permitted under the performance approach; in which case, the higher mandatory levels must be installed. For example, a building may comply with the performance computer modeling with only R-7 insulation in a raised floor; however, if the mandatory requirement for this raised floor is R-19, the R-19 must be installed consistent with the mandatory requirements.~~

1.6.2 Prescriptive ~~Packages~~Requirements

Prescriptive Approach

The prescriptive approach (composed of prescriptive requirements described in Chapters 3, 4, 5, and 6) is the simpler approach of the two. Each individual energy component of the proposed building must meet a prescribed minimum efficiency. The prescriptive approach offers relatively little design flexibility but is easy to use. There is some flexibility for building envelope components, such as walls, where portions of the wall that do not meet the prescriptive insulation requirement may still comply as long as they are area-weighted with the rest of the walls, and the average wall performance complies. If the design fails to meet even one of the requirements, then the system does not comply with the ~~P~~prescriptive approach~~Standards~~. In this case the performance approach provides the most flexibility to the building designer for choosing alternative energy efficiency features.

- *Building Envelope*. The prescriptive envelope requirements are determined either by the envelope component approach or the overall envelope approach. These two approaches are described in detail in Chapter 3 of this manual. The stringency of the envelope requirements varies according to climate zone and occupancy type.
- *Mechanical*. The prescriptive mechanical requirements are described in detail in Chapter 4. The ~~p~~prescriptive approach~~Standards~~ do not offer any alternative approaches, but specify equipment, features and design procedures that must be followed.
- *Indoor Lighting*. The prescriptive lighting power requirements are determined by one of three methods: the complete building method, the area category method, or the tailored method. These three approaches are described in detail in Chapter 5. The allowed lighting under the Standards varies according to the requirements of the particular building occupancy or task requirements.

DRAFT

~~**Building Envelope**~~

~~The prescriptive envelope requirements are determined either by the Envelope Component Approach or the Overall Envelope Approach. These two approaches are described in detail in Chapter 3, beginning with an introduction in Section 3.1. The stringency of the envelope requirements varies according to climate zone and occupancy type.~~

~~**Mechanical**~~

~~The prescriptive mechanical requirements are described in detail in Chapter 4. The prescriptive Standards do not offer any alternative approaches, but specify hardware features and design procedures that must be followed.~~

~~**Indoor Lighting**~~

~~The prescriptive lighting requirements are determined by one of three methods: the Complete Building Method, the Area Category Method, or the Tailored Method. These three approaches are described in detail in Chapter 5, beginning with Section 5.2.2 Prescriptive Approach. The allowed lighting under the Standards varies according to the requirements of the particular building occupancy or task requirements.~~

Outdoor Lighting

~~The prescriptive~~ Outdoor lighting ~~requirements~~ compliance is prescriptive in nature and is~~are~~ determined by lighting application type (general and specific) and the lighting zone for each application. These approaches are discussed in detail in Chapter 6, beginning with Section 6.4 Outdoor Lighting Power Allowances. Outdoor Lighting. *The Outdoor Lighting Standards are described in Chapter 6. They set power limits for various applications such as parking lots, pedestrian areas, sales canopies, building entrances, building facades and signs. The Standards also set minimum requirements for cutoff luminaires and controls. ~~Performance~~*

1.6.3 Performance Approach

The performance approach (Chapter 9) allows compliance through a wide variety of design strategies and provides greater flexibility than the prescriptive approach. It is based on an energy simulation model of the building. The Standards specify the method for determining an energy budget for the building.

The performance approach requires an approved computer software program that models a proposed building, determines its allowed energy budget, calculates its energy use, and determines when it complies with thbe budget. Design options such as window orientation, shading, thermal mass, zonal control, and building configuration are all considered in the performance approach. This approach is used because of the flexibility and because it provides a way to find the most cost-effective solution for complying with the Standards.

.

The performance approach~~, also known as the computer method,~~ requires that the annual TDV energy be calculated for the proposed ~~house~~ building or space, and be compared to the TDV energy budget. The performance approach may be used for envelope compliance, envelope and mechanical compliance, envelope and interior lighting compliance, or envelope, mechanical and interior lighting compliance. It is not applicable to outdoor lighting, nor to interior lighting or mechanical compliance in the absence of envelope compliance.

DRAFT

TDV energy is the "currency" for the performance approach. TDV energy not only considers the type of energy that is used (electricity, gas, or propane), but also when it is used. Energy saved during periods when California is likely to have a statewide system peak is worth more than energy saved at times when supply exceeds demand. Appendix JA3~~III~~ of the Reference Joint Appendices has more information on TDV energy.

~~The performance approach allows a wider variety of design strategies and provides greater flexibility than the prescriptive approach. It is based on an energy simulation model of the building. The Standards specify the method for determining an energy budget for the building. This energy budget represents the upper limit of energy use allowed for that particular building. The designer is permitted to trade off different aspects of the building design, one against the other, when permit applications for more than one component are submitted at the same time. As long as total energy use considering all installed components does not exceed the allowed budget, the tradeoff is acceptable.~~

Three basic steps are involved:

1. Design the building with energy efficiency measures that are expected to be sufficient to meet the energy budget. (The prescriptive approach requirements provide a good starting point for the development of the design.)
2. Demonstrate that the building complies with the mandatory measures (see Chapters 3, 4, 5 and 6).
3. Using an approved calculation method, model the energy consumption of the building using the proposed features to create the proposed energy budget. The model will also automatically calculate the allowed energy budget for the proposed building.

If the proposed energy budget is no greater than the allowed energy budget, the building complies.

If performance approach will be used for additions and alterations see Chapter 9 for details.

1.7 Scope and Application

DRAFT

The California Standards apply to both nonresidential and residential buildings. This manual addresses the requirements for nonresidential buildings, including hotels, motels, and high-rise residential buildings (those over three stories above grade in height). The Residential Manual addresses the requirements for low-rise residential buildings, which include the single family and duplex residential buildings.

1.7.1 Building Types Covered

The nonresidential Standards apply to all buildings of the California Building Code (CBC) occupancies of Group A, B, E, F, H, M, R, S or U ~~buildings~~. If

these buildings are directly or indirectly conditioned, they must all mechanical, envelope, indoor, and outdoor lighting requirements of the Standards. Those buildings that are not directly or indirectly conditioned must only meet the indoor and outdoor lighting requirements of the Standards. ~~that are mechanically heated or mechanically cooled resulting in directly or indirectly conditioned space. Nonresidential buildings that have space conditioning, but do not meet the criteria of a directly or indirectly conditioned building, must comply with the lighting requirements only.~~

The Standards do not apply to CBC Group I. This group includes such buildings as hospitals, daycare, nursing homes, and prisons. The Standards also do not apply to buildings that fall outside the jurisdiction of California building codes, such as mobile structures. If outdoor lighting is associated with a Group I occupancy, it is exempt from the Standards requirement; however, if the outdoor lighting is part of any of occupancy groups listed above, it must comply with the Standards requirements.

Historic Buildings

Exception 1 to §100(a) states that qualified historic buildings, as ~~defined~~ regulated by ~~in~~ the California Historical Building Code Title 24, Part 8 or California Building Code, Title 24, Part 2, Volume I, Chapter 34, Division II are not covered by the Building Energy Efficiency Standards. Building Energy Efficiency Standards §146(a)3~~5~~Q and §147 Exception 14 ~~to 147~~ clarify~~clarifies~~ that indoor and outdoor lighting systems in qualified historic buildings are exempt from the lighting power allowances only if they consist solely of historic lighting components or replicas of historic lighting components. If lighting systems in qualified historic buildings contain some historic lighting components or replicas of historic components, combined with other lighting components, only those historic or historic replica components are exempt. All other lighting systems in qualified historic buildings must comply with the Building Energy Efficiency Standards.

The California Historical Building Code (CHBC) ~~§~~Section102.1.1 specifies that all non-historical additions must comply with the regular code for new construction, including the Building Energy Efficiency Standards. CHBC ~~§~~Section 901.5 specifies that when new or replacement mechanical, plumbing, and/or electrical (including lighting) equipment or appliances are added to historic buildings; they should comply with the Building Energy Efficiency Standards, including the Appliance Efficiency Regulations.

The California State Historical Building Safety Board has final authority in interpreting the requirements of the CHBC and determining to what extent the requirements of the Building Energy Efficiency Standards apply to new and replacement equipment and other alterations to qualified historic buildings. It should be noted that in enacting the State Historical Building Code legislation, one of the intents of the Legislature was to encourage energy conservation in alterations to historic buildings (Health and Safety Code ~~§~~Section18951).

Additional information about the CHBC can be found on the following website:

http://www.dsa.dgs.ca.gov/StateHistoricalBuildingSafetyBoard/

Contact the State Historical Building Safety Board at (916) 445-7627.

Low-rise Residential Buildings

The low-rise residential Standards cover single-family and low-rise residential buildings (occupancy groups R1, R2, and R3) and CBC Group U buildings including:

- All single-family dwellings of any number of stories.
- All duplex (two-dwelling) buildings of any number of stories.
- All multi-family buildings with three or fewer habitable stories above grade (Groups R-1 and R-2).
- Additions and alterations to all the above buildings.
- Private garages, carports, sheds and agricultural buildings.

Table 1-1 – Nonresidential vs. Residential Standards

Nonresidential Standards	Low-Rise Residential Standards
These Standards cover all nonresidential occupancies (Group A, B, E, F, H, M, R, S or U), as well as high-rise residential (Groups R-1 and R-2 with four or more habitable stories), and all hotel and motel occupancies.	These Standards cover all low-rise residential occupancies including:
Offices Retail and wholesale stores Grocery stores Restaurants Assembly and conference areas Industrial work buildings Commercial or industrial storage Schools and churches Theaters Hotels and motels Apartment and multi-family buildings, and long-term care facilities (Group R-2), with four or more habitable stories	All single family dwellings of any number of stories (Group R-3) All duplex (two-dwelling) buildings of any number of stories (Group R-3) All multi-family buildings with three or fewer habitable stories above grade (Groups R-1 and R-2) Additions and alterations to all of the above buildings
Note: The Standards define a habitable story as one that contains space in which humans may live or work in reasonable comfort, and that has at least 50% of its volume above grade.	

DRAFT

1.7.2 Scope of Improvements Covered

The Standards apply to any new construction that requires a building permit, whether for an entire building, for outdoor lighting systems, for signs, or for a modernization. The primary enforcement mechanism is through the building permitting process. Until the ~~building department~~enforcement agency is satisfied that the building, outdoor lighting, or sign complies with all applicable code requirements, including the Standards, it may withhold the building permit (or, after construction, the occupancy permit).

The Standards apply only to the construction that is the subject of the building permit application (with the exception of existing spaces that are "conditioned" for the first time, in which case existing envelope components, and existing lighting systems, whether altered or not, ~~also~~ must also show compliance with the Standards).

Other than for lighting, the Standards apply only to buildings that are directly or indirectly conditioned by mechanical heating or mechanical cooling. Section 1.7.15 provides detailed definitions of these terms.

1.7.3 Speculative Buildings

Known Occupancy

Speculative buildings of known occupancy are commonly built by developers. For example, if a ~~strip shopping center~~big box retail center or an office building were built on speculation, the owner would usually know the ultimate occupancy of the space but might not know the actual tenants. For this type of building, the owner~~ could take responsibility for any or all of the major components by simply building and showing energy compliance for the envelope, and leaving the lighting and HVAC improvements to the tenants (or the project could include the other systems as well)~~has several compliance choices:

- Declare building to be unconditioned space, forcing tenants to be responsible for envelope, interior lighting, possibly some exterior lighting, and mechanical compliance.
- Include envelope compliance.
- Include envelope compliance as well as mechanical and/or lighting compliance, when those systems are to be installed prior to leasing.

DRAFT

There are several potential pitfalls with delaying envelope compliance. For example, tenants may have a difficult time showing compliance, depending on fenestration areas and glass efficiency. An energy code update between the time of shell construction and energy compliance for a tenant improvement could make compliance even more difficult. Constructing a “big box” style building without skylights, where skylights are required under the prescriptive approach, will also create a compliance challenge (and possibly impose large costs to retrofit skylights). In most instances upgrading the envelope later increases total construction costs, as it is easier to install envelope features at time of construction of the shell than afterwards. And for buildings that are certain to be conditioned, some enforcement agencies require envelope compliance at the time of shell construction.

For information about energy compliance for tenant improvements in existing buildings, see Section 1.7.10.

An obvious example is declaring the shell to be unconditioned, not insulating the shell and having to insulate the shell as part of the tenant improvement that adds air-conditioning. This increases the final cost of the building and should render the shell less valuable for spaces that are ultimately going to be conditioned.

A less obvious example~~, which is new to the 2005 standards,~~ is the shell of a building that will ultimately become a big box retail store or a warehouse with

lighting power densities greater than> 0.5 W/ft^2, ceiling heights greater than> 15 ft, and an enclosed area >greater than 8,000~~25,000~~ ft^2. Such occupancies are prescriptively required to have skylights and daylighting controls. Installing skylights in the roof of the speculative building shell is less expensive than retrofitting them later. This should be considered when designing speculative shell buildings for the big box retail or warehouse market, as they will be more saleable than those requiring skylight retrofits.

Because compliance may be demonstrated for each component separately, the owner can simply demonstrate that the systems being built meet the Standards. The remaining construction and Standards compliance work can be dealt with as each tenant obtains building permits for work in their individual spaces (see Section 1.7.10).

~~Often, the developer will seek to minimize first cost by delaying compliance and construction of as much of the project as possible. While this can be done under the Standards, there are two disadvantages:~~

~~1. If all Standards compliance is deferred by declaring the building to be unconditioned, the owner needs to understand the potential problems that could arise later when the building is conditioned.~~

Unknown Occupancy

Speculative buildings are often built for which the ultimate occupancy is determined at the time of leasing and not during construction of the building shell. The structure, for example, could eventually be used as an office, a warehouse, a restaurant, or retail space. Because the Standards treat these occupancies in a similar fashion, the fact that the ultimate occupancy is unknown is not a significant problem. The major items affected by the ultimate occupancy have to do with lighting and ventilation requirements. If at the time of permitting a tenant is not identified for a multi-tenant space, the tenant leased space lighting power allowances from Standards Table 146-F~~G~~ shall be used.

The major problem that can occur with this type of building comes when the owner elects to declare it as an unconditioned building and defer Standards compliance until such time as a tenant installs mechanical space conditioning equipment.

1.7.4 Mixed Use Buildings

Because the Standards are different for residential, high rise residential and nonresidential buildings, and because mixed-use buildings occasionally include more than one type of occupancy, there is potential for confusion in application. The Standards address these circumstances regarding mixed-use buildings:

~~1.~~• **Minor Occupancy** (exception to §100(f)). When either residential occupancy is mixed or one of those is mixed with a non-residential occupancy the envelope, mechanical requirements for each occupancy differ. In these case, if the minor occupancy or occupancies occupy less than ~~10~~20 percent~~%~~ of the total conditioned floor area, then they may optionally be treated as if they were of the major occupancy for the purpose

of envelope, HVAC, and water heating. Lighting requirements in Section§s 146 through 148 or 150(k) must be met for each occupancy separately. The mandatory measures applicable to the minor occupancy, if different from the major occupancy, would still apply.

2.• **Different Nonresidential Occupancies**. When both of these occupancies fall under the nonresidential side of the Standards, they would be dealt with together under the same compliance process. Although the occupancies may have different envelope and lighting requirements, these are not so different as to require special compliance procedures.

3.• **Hotel/Motel and Nonresidential Occupancies.** A hotel/motel with guest rooms, restaurants, sports facilities and/or other nonresidential occupancies is defined as a hotel/motel occupancy. The only variance is that the guestroom envelope and lighting and HVAC control requirements are different from the nonresidential occupancy energy requirements that would apply to the "common" areas of the building..

4.• **Mixed Residential and Nonresidential Occupancies.** These occupancies fall under different sets of Standards and are considered separately. Two compliance submittals must be prepared, each using the calculations and forms of its respective Standards.

Example 1-1

Question

A 250,000ft² high-rise office building includes a small 500ft² apartment on the first floor for use by visiting executives. This is clearly a residential occupancy, so is the apartment required to meet the residential requirements of the Standards, and if so which ones – high rise residential or low rise residential?

Answer

No. First of all the apartmentIt occupies less than 1020 percent% of the total conditioned floor area, so it is a minor occupancy and may be treated as part of the office occupancy. Secondly since it is located on the first floor of the building it is technically a low rise residential building. As a result all of the low-rise rResidential mandatory measures apply.

DRAFT

1.7.5 High-rise Residential

High-rise residential buildings (four habitable stories or more) are covered by this manual and the nonresidential Standards.

The Standards apply separately to the living quarters and to other areas within the building. Living quarters are those non-public portions of the building in which a resident lives. High-rise residential dwelling units must incorporate the envelope and mechanical elements of the nonresidential Standards, with the lighting and service hot water needs of residential buildings. Outdoor lighting, including parking lots and garages for eight or more vehicles, and for indoor or outdoor signs (other than exit signs) must comply with the nonresidential Standards. Exit signs must comply with the Appliance Efficiency RegulationsStandards.

The following subsections discuss the special compliance requirements that apply to high-rise residential occupancies.

Mandatory Measures

The mandatory measures for envelope, mechanical and indoor lighting, outdoor lighting, and signs apply to high-rise residential buildings. Special requirements for high-rise residential buildings are summarized below:

- ~~1.~~ Living quarters must meet the applicable indoor lighting requirements for low-rise residential buildings.
- ~~2.~~ Outdoor lighting must meet the applicable outdoor lighting requirements of the Nonresidential Standards.
- ~~3.~~ Indoor and outdoor signs (other than exit signs) must comply with the Nonresidential Standards. Exit signs must comply with the Appliance Efficiency ~~Regualtions~~Regulations~~Standards~~.
- ~~4.~~ High-rise residential occupancies must meet setback requirements applicable to low-rise residential occupancies.
- ~~5.~~ Readily accessible area switching controls are not required in public areas provided switches that control the lights in public areas are accessible to authorized personnel.
- ~~6.~~ Automatic lighting shut-off controls are not required for living quarters.

Prescriptive Compliance

The prescriptive requirements for envelope, mechanical and lighting apply to high-rise residences. The following summarize the special prescriptive requirements for high-rise residential buildings.

- ~~1.~~ The envelope must meet the prescriptive envelope criteria for high-rise residential buildings (Standards Table 143-B).
- ~~2.~~ High-rise residential living quarters are not required to have economizer controls.
- ~~3.~~ High-rise residential living quarters are exempt from the nonresidential lighting power density requirements. However, ~~kitchens must meet the residential 50 percent% high efficacy wattage requirements of the NonrResidential Standards. In addition, bathrooms must meet the efficiency and control requirements of §150(k). While there are no Prescriptive lighting requirements for residential buildings,~~ lighting within the dwelling units must meet the lighting requirements of §150(k) which governs lighting in all spaces (including kitchen lighting requirements) except closets less than 70 square feet floor area. See Chapter 6 of the 2008 Residential Compliance Manual.
- ~~4.~~ Each occupancy (other than living quarters) in the high-rise residence must comply with the nonresidential lighting requirements.
- ~~5.~~ For compliance with water heating requirements use the low-rise residential compliance.

Performance Compliance

The rules for high-rise residential performance compliance are identical to the performance compliance rules for all nonresidential buildings. The area of each function of a high-rise residence is input into the program along with its

DRAFT

corresponding envelope, mechanical and lighting features. The computer program will automatically calculate an energy budget for the standard design, and the proposed design's energy use.

1.7.6 Hotels and Motels

This section discusses both the similarities and differences between the requirements for a hotel/motel and other nonresidential or high-rise residential buildings.

The design of a hotel or motel is unique in that the design must incorporate a wide variety of occupancies and functions into one structure. The occupancies range from nonresidential occupancies to hotel/motel guest rooms. Design functions that affect guests range from the "experience of arrival" created through the main lobby's architectural features to the thermal comfort of the guest rooms. Other functions that hotel/motel designs must address include restaurants, kitchens, laundry, storage, light assembly, outdoor lighting, sign lighting, and other items that are necessary to the hotel/motel function. In short, these structures can range from simple guest rooms with a small office, to a structure encompassing a small city.

Like other occupancies: compliance is submitted for the features covered in the permit application only. The nonresidential areas must meet the envelope, mechanical, indoor lighting, outdoor lighting, and sign lighting portions of the Nonresidential Standards, and the guest room portions of hotels/motels must meet the envelope, mechanical, and lighting provisions applicable only to hotels/motel guest rooms. In essence, each portion of the building individually complies with the provisions applicable to that occupancy.

Since hotel/motels are treated as a mixture of occupancies covered by the Standards, the concepts presented at the beginning of each chapter apply to hotels/motels as they would any other nonresidential occupancy.

DRAFT

Mandatory Measures

The mandatory measures for envelope, mechanical, indoor lighting, outdoor lighting, and sign lighting apply to hotels/motels. The following bullets describe special requirements or exceptions for hotel/motel buildings.

- ~~1.~~ ~~Ninety percent (~~90 percent~~%)~~ of the hotel/motel guest rooms must meet the applicable lighting requirements for low-rise residential buildings.
- ~~2.~~ Outdoor lighting must meet the applicable outdoor lighting requirements.
- ~~3.~~ Indoor and outdoor signs (other than exit signs) must comply with the Nonresidential Standards. Exit signs must comply with the Appliance Efficiency Regulations~~Standards~~.
- ~~4.~~ Hotel and motel guest room thermostats shall have numeric temperature settings.
- ~~5.~~ Readily accessible area switching controls are not required in public areas provided switches that control the lights in public areas are accessible to authorized personnel.

~~6.~~• Automatic lighting shut-off controls are not required for hotel/motel guest rooms.

Prescriptive Compliance

The prescriptive requirements for envelope, mechanical and lighting apply to hotel/motels. The following prescriptive requirements are specific to hotel/motels:

~~1.~~• Hotel/motel guest rooms must meet the prescriptive envelope criteria for high-rise residential buildings rather than the prescriptive criteria for nonresidential buildings.

~~2.~~• Hotel and motel guest rooms are not required to have economizer controls.

~~3.~~• Guest rooms in hotel/motels are exempt from the lighting power density requirements. However, lighting must meet the low-rise residential requirements of §150 (k).

~~4.~~• Each occupancy (other than guest rooms) in the hotel/motel must comply with the nonresidential lighting requirements.

~~5.~~• For compliance with water heating requirements use the low-rise residential compliance

Performance Compliance

The rules for performance compliance are identical to the rules for complying for all other nonresidential and high-rise residential buildings. The area of each function of a hotel/motel is input into the program along with its corresponding envelope, mechanical and indoor lighting features. The computer program will automatically calculate an energy budget for the standard design, and the proposed design's energy use.

1.7.7 Live-Work Spaces

Live-work buildings are a special case of mixed occupancy buildings, as they combine residential and nonresidential uses within individual units~~. The building envelope of live-work buildings are required to meet the requirements of either the low-rise or high-rise residential standards, depending on the number of habitable floors. Low-rise Residential Standards apply to live/work units that are part of a building with no more than three habitable stories. Note that the loft space in a unit with high ceilings is not generally counted as a separate story (see definitions later in this chapter).~~ In general The low-rise or high-rise residential requirement (depending on the number of habitable stories) appl~~ies~~y since these buildings operate (and therefore are conditioned) 24 hours per day. Lighting in designated workspaces is required to show compliance with the nonresidential lighting requirements (§146).

1.7.8 Unconditioned Space

Unconditioned space is neither directly nor indirectly conditioned, as defined in the previous section. Both the requirements for lighting and minimum skylight

DRAFT

area apply to unconditioned space. Some typical examples of spaces that may be unconditioned:

~~1.~~• Enclosed parking structures

~~2.~~• Automotive workshops

~~3.~~• ~~Covered~~ Enclosed entry courts or walkways

~~4.~~• Enclosed outdoor dining areas

~~5.~~• Greenhouses

~~6.~~• Loading docks

~~7.~~• Warehouses

~~8.~~• Mechanical/electrical equipment rooms

Keep in mind that these kinds of spaces are not always unconditioned. The specifics of each case must be determined. See Figure 1-4~~3~~ to determine whether a space is unconditioned or conditioned.

DRAFT

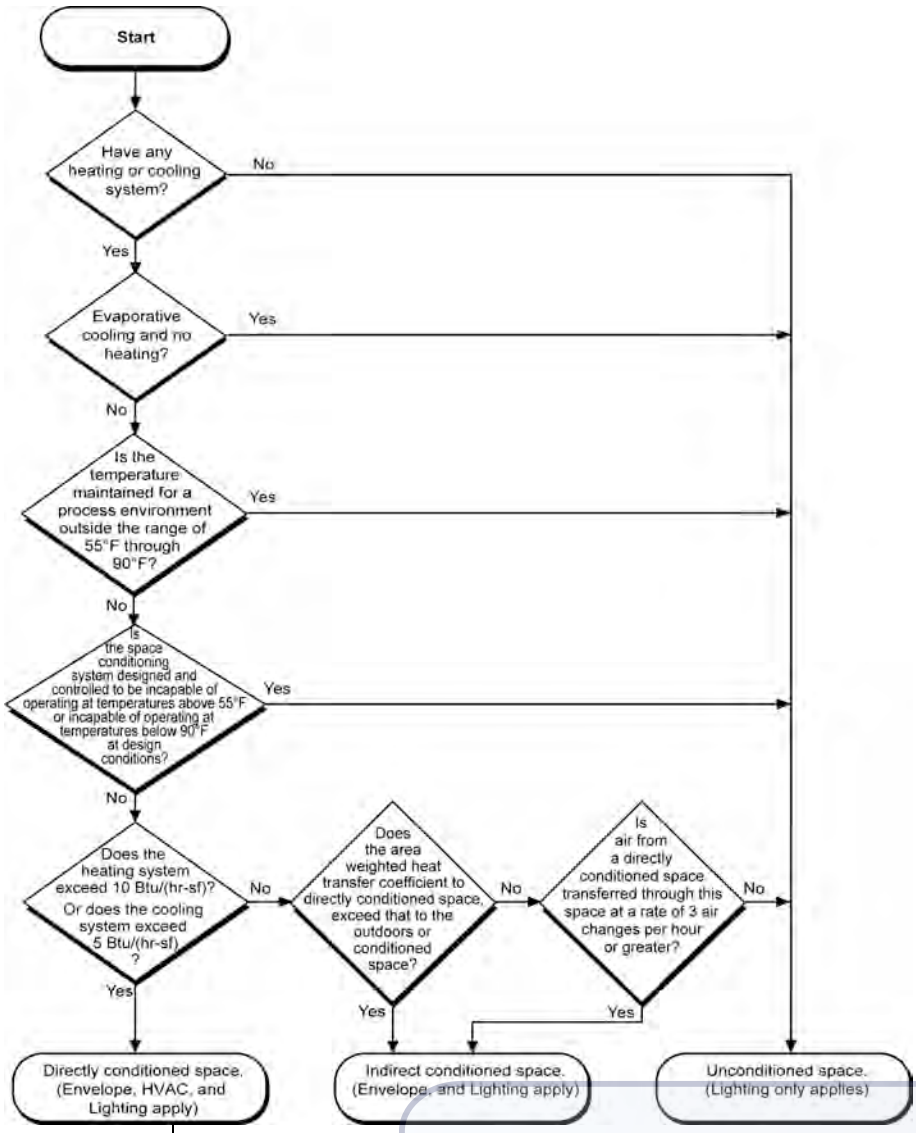

Figure 1--4_– Type of Conditioned Space and Scope of Compliance

DRAFT

1.7.9 Newly Conditioned Space

When previously unconditioned space becomes conditioned, the space is then considered an “addition” and all the building’s components must then comply as if it were a new building.

This situation has potentially significant construction and cost implications. For example, if an unconditioned warehouse is upgraded with a heating system, thus becoming conditioned space, the building envelope must comply with the current envelope requirements and the lighting system must be brought into conformance with the current lighting requirements, including mandatory wiring and switching. If the envelope has large windows, it is conceivable that some would have to be eliminated or replaced with more efficient windows. If the lighting system is inefficient, fixtures might have to be removed and new, more efficient fixtures be installed.

This requirement can cause difficulty when an owner of a building seeks exemption from complying with the Standards by erecting a shell with no plans to condition it. For example, the owner of an office building obtains a permit for the structure and envelope, but wishes to leave the space conditioning and lighting improvements to the tenants. If that owner claims unconditioned status for that building, the owner does not have to demonstrate compliance with the envelope requirements of the Standards, but does have to demonstrate compliance with the lighting requirements. If at the time of permitting a tenant is not identified for a multi-tenant space, the tenant leased space lighting power allowances from Standards Table 146-F~~C~~ shall be used. As soon as the tenant applies for a permit to install the HVAC equipment, however, the envelope and any existing lighting ~~in the shell~~to remain must then be brought into full compliance with the requirements for the occupancy designated at the time of the HVAC permit application. This is the only circumstance when systems, other than those subject to the current permit application, fall under the Standards. If the building was initially designed in a way that makes this envelope compliance difficult, the building envelope may require expensive alterations to bring it into compliance.

Many building departments require the owner to sign an affidavit at the time of the initial building permit for the shell, acknowledging the potential difficulties of future envelope or lighting compliance.

To minimize Standards compliance difficulties, the recommended practice is to demonstrate energy compliance at the time the envelope is built, and to demonstrate compliance for the lighting systems when lighting systems are installed.

1.7.10 New Construction in Existing Buildings

Alterations, tenant improvements, and repairs are new construction in an existing building. For example, the base building has been constructed, but the individual tenant spaces have not been completed. Tenant improvements can include work on the envelope, the mechanical or the lighting systems. Whatever the case, the system or systems being installed are considered to be new construction, and must comply with some or all of the current Standards, depending on the extent of the changes (see following sections).

The only circumstance when systems other than those subject to the current permit application come under scrutiny is when the tenant improvement results in the conditioning of previously unconditioned space.

DRAFT

1.7.11 Alterations to ~~Occupied~~ Existing Conditioned Spaces

§149(b)

An alteration is any change to a building's water heating system, space conditioning system, indoor lighting system, outdoor lighting system, sign, or envelope that is not an addition. Alterations or renovations to existing conditioned spaces have their own set of rules for energy compliance. They are covered in ~~a separate section of the Standards,~~ §149(b). Additions are discussed in §149(a).

In summary, the alteration rules are:

1. The Standards apply only to those portions of the systems being altered; untouched portions need not comply with the Standards.
2. If an envelope, indoor lighting, outdoor lighting, or sign lighting alteration increases the energy use of the altered systems, the alteration must comply with the current Standards.
3. Alterations must comply with the mandatory measures for the changed components.
4. New systems in the alteration must comply with the current Standards.
5. In an existing unconditioned building, outdoor lighting, or sign lighting system, altered lighting must meet mandatory measures for the changed lighting component.
6. Alterations that increase the connected lighting load or replace more than 50 percent~~%~~ of the lighting fixtures (counting existing and new fixtures only in the enclosed spaces where light fixture alterations are proposed) must meet current Standards. Replacement of parts of an existing lighting fixture, including installing new ballasts or lamps, without replacing the entire luminaires is not an alteration subject to the alteration requirements.

~~6~~7. In an existing, unconditioned building where evaporative cooling is added the existing unaltered envelope and lighting do not need to be brought into compliance with current Standards.

The effect of these rules is that, in most cases, the existing systems (envelope and lighting) set the standard for the altered systems. For example, if the existing lighting system is changed but does not increase the connected lighting load, does not replace more than 50 percent~~%~~ (30 percent~~%~~ for outdoor lighting) of fixtures in the spaces where lighting changes are proposed, but meets the applicable mandatory measures, it complies. The same holds true for changes to the envelope: if the overall heat loss or heat gain is not increased and it meets its applicable mandatory measures, then it complies. Mechanical system alterations are governed primarily by the mandatory measures.

The alternative alteration rule is to make changes to the existing building so that the entire building (existing and alteration) complies with the performance approach of the current Standards. Keep in mind that, under the performance approach, credit is given only for systems that are actually changed in the current construction process.

DRAFT

Example 1-2

Question

An owner wants to add less than 50 ft^2 of new glazing in an old building. What are the applicable requirements for the new glazing?~~This will increase the glazing area. ?~~

Answer

Exception to ~~Section~~§ 149(b)1Aii exempts up to 150 square feet of added windows from the requirements ~~Section~~§ 143(a)5, which includes the west facing windows limitations and U-factor requirements. The new glazing must still meet the RSHG requirements for the 30-40 percent~~%~~ of WWR of Table 143-B.

~~The added glass must meet the U-value requirements but not the shading requirements in §143. In addition, the window must be rated for U-factor and SHGC either with default values and labels or be rated and labeled in accordance with NFRC standards and programs.~~

Example 1-3

Question

A building owner wants to change existing lighting fixtures with new ones. Do the Standards restrict the change in any way?

Answer

If more than 50 percent~~%~~ of the fixtures are replaced, in the permitted space (excluding enclosed spaces where no new lighting fixtures are proposed), or the connected load is increased, the Standards will treat this as a new lighting system that must comply with §146. Any applicable mandatory requirement affected by the alteration applies, and the mandatory switching requirements would apply to the improved system if the circuiting were altered. Title 20 Appliance Efficiency Regulations requirements for ballasts would also apply.

Example 1-4

Question

A building owner wants to rearrange some interior partitions and re-position the light fixtures in the affected rooms. Do the Standards apply to the work?

Answer

Each of the newly arranged rooms must have its own light switches. Since there is no change in the connected lighting load or the exterior envelope, only the mandatory light switching requirements would apply.

Example 1-5

Question

A building owner wants to re-arrange some duct work and add some additional fan coils to an existing HVAC system to improve comfort. Do the Standards apply to the work?

Answer

There would be no change in the load on the system nor any increase in its overall capacity, so the Standards would not apply to the central system. Only the duct construction requirements apply to altered ducting.

Example 1-6

Question

A building owner wants to replace an existing chiller. No other changes will be made to the HVAC system. Do the Standards restrict the change in any way?

Answer

DRAFT

The mandatory efficiency requirements would govern the efficiency of the new chiller. The other parts of the system are unchanged and therefore unaffected by the Standards.

Example 1-7

Question

A building owner has a high ceiling space and wants to build a new mezzanine space within it. There will be no changes to the building envelope or to the central HVAC system. There will be new lighting installed. How do the Standards apply?

Answer

Since a mezzanine does not add volume, it is an alteration, not an addition. The existing systems are not affected unless they are altered. The new lighting must comply with all requirements of the Standards. The envelope is unchanged, so there are no requirements for it. The mechanical system duct work is simply extended without increase in system capacity, so only the duct construction and insulation requirements apply.

1.7.12 Additions

§149(a)

An addition is any change to a building that increases ~~conditioned~~ floor area and conditioned volume. Additions involve either the construction of new, conditioned space and conditioned volume, ~~or~~ the installation of space conditioning in a previously unconditioned space, or the addition of unconditioned space. The mandatory measures and either the prescriptive or the performance requirements apply. For conditioned space t~~T~~he heating, lighting, envelope, and water heating systems of additions are treated the same as for new buildings. The only exception to this is if the existing mechanical system(s) are simply extended into the addition: Standards Exception to §149(a). Refer above to Section 1.7.8 for further discussion of previously unconditioned space. Note that unconditioned additions need only comply with indoor, outdoor lighting, and sign lighting requirements of the Standards.

There are three options for the energy compliance of additions under the Standards:

Option 1 – Addition Alone

Treat the addition as a stand-alone building with adiabatic walls to conditioned space (§149(a)1 and (§149(a)2.B.i~~1~~). This option can employ either the prescriptive or the performance approach. Adiabatic means the common walls are assumed to have no heat transfer between the addition and the adjacent conditioned space, and are ignored entirely.

Option 2 – Existing-Plus-Addition

Combine the existing building with the addition (§149(a)2Bii~~2~~). This ~~option only works with the~~is a performance approach option only. Under this scenario, the proposed budget is calculated based on existing building features that remain unaltered, all alterations (actual values of the proposed alterations) plus the proposed addition. The standards (allowed) budget is calculated based on the

existing building features that remain altered, all proposed alterations modeled to meet the requirements of ~~Section~~§-149(b)2B (these are generally mandatory or prescriptive requirements for mechanical, envelope, and lighting systems) plus the addition modeled to meet the requirements of ~~Section~~§-141. If the proposed budget is less than or equal to the standard budget, then the building complies. ~~It uses the custom budget approach to develop an energy budget for the existing building and a standard version of the addition. These combine into a total building energy budget. The combined building is then modeled as proposed. If it meets the budget, the addition complies.~~ The Standard Design for any alterations to existing lighting and mechanical systems must meet the requirements for altered systems in §149(b).

This option will generally work to ease the energy requirements of the addition only if there are energy improvements to the existing building. It does allow the designer to make a relatively energy inefficient addition comply.

Option 3 – Whole Building

The existing structure combined with the addition can be shown to comply as a whole building with all requirements of the current Standards for new construction for envelope, lighting and mechanical. This method is only practical if the existing building is, or will be improved to be, consistent with current ~~energy s~~Standards requirements.

DRAFT

Example 1-8

Question

A restaurant adds a greenhouse-style dining area with large areas of glazing. It is directly conditioned space. How can it comply with the Standards?

Answer

Because of its large glass area, it will not comply on its own. By making substantial energy improvements to the existing building (lighting, mechanical or other envelope features), or upgrading the existing building so that the entire building meets the requirements for new construction, it is possible for the combined building to comply. The performance approach would be used to model the combined existing/new building.

1.7.13 Changes of Occupancy

A change of occupancy alone does not require any action under the ~~Energy~~ Standards. If changes (alterations) are made to the building, however, then the rules for alterations or additions apply (see Sections 1.7.11 and 1.7.12).

If the change in occupancy involves converting from a residential to a nonresidential occupancy or vice versa (changes defined by the California Building Code occupancy definitions), then the Standards applicable to the new occupancy would govern any alterations made to the building. For example, if a home is converted to law offices, and a new lighting system is installed, the nonresidential lighting requirements would apply. If a new HVAC system is installed, all the nonresidential HVAC requirements would have to be met.

If no changes are proposed for the building, it is advisable to consider the ventilation requirements of the new occupancy. For example, if a residence is converted to a hair salon, the ventilation rates of the building should be considered. With new sources of indoor pollution, the existing residential ventilation rates would likely not be adequate for the new uses. However, no change is required by the Standards.

1.7.14 Repairs

A repair is the reconstruction or renewal of any part of an existing building for the purpose of its maintenance. Repairs shall not increase the preexisting energy consumption of the required component, system, or equipment.

1.7.15 Scope Concepts and Definitions

This section explains the definitions and terms necessary for understanding the scope and application of the Nonresidential Standards. In most cases, a careful reading of these definitions will resolve questions of interpretation. See also the Glossary in Reference Joint Appendix JA1~~I~~.

Building *is any structure or space ~~for which a permit is sought~~that is covered by ~~Section~~§ ~~100 of the Standards~~.* By this definition, a building is not necessarily a complete physical structure. For the Standards, a building in this sense can be a lighting system recircuiting project, because this would require an electrical permit.

DRAFT

Conditioned Floor Area (CFA) is the floor area (in square ft) of enclosed conditioned space on all floors of a building, as measured at the floor level of the exterior surfaces of exterior walls enclosing the conditioned space. Once the spaces that are directly or indirectly conditioned are identified, then it is possible to calculate the conditioned floor area of the building. This number is used for various calculation purposes in complying with the Standards. The CFA is generally calculated from dimensions on the floor plans of the building. It is measured from the outside surfaces of exterior walls, with the dimensions taken at floor level. This definition helps mitigate any complexity from sloping walls, bay windows and other unique building details.

Conditioned Space *is space in a building that is either directly conditioned or indirectly conditioned.* In most circumstances it is obvious whether a space is conditioned or unconditioned. There are, however, special circumstances that require a closer look at the definitions of directly and indirectly conditioned space.

Directly Conditioned Space is an enclosed space that is provided with wood heating, is provided with mechanical heating that has a capacity exceeding 10 Btu/(hr.×ft.²), or is provided with mechanical cooling that has a capacity exceeding 5 Btu/(hr.×ft.²), unless the space-conditioning system is designed for a process space. (See “Process space”).

Space-conditioning system that may consist of but not limited to chiller/compressor, air handler unit, cooling and heating coils, air and water cooled condenser, economizer, and the air distribution systems, which provides

either collectively or individually heating, ventilation, or cooling within ro associated with conditioned spaces in a building.

Process Space is a space that is~~is designed and~~ thermostatically controlled to maintain a process environment temperature less than 55°F or to maintain a process environment temperature greater than 90°F for the whole space that the system serves, or is a space within a space-conditioning system designed and controlled to be incapable of operating at temperatures above 55°F or incapable of operating at temperature below 90°F unless the space conditioning is designed and controlled to be incapable of operating at temperatures above 55°F or incapable of operating at temperatures below 90°F at design conditions. These~~is~~ definitions contains several key ideas central to the Standards. First, mechanically heated or mechanically cooled space (discussed below) may be conditioned (i.e., it does not have to be both heated and cooled). Second, it depends on how much heating or cooling is provided to determine if the space is directly conditioned. It is not uncommon for an otherwise unheated space (such as a warehouse) to have a small area with a unit heater, such as a desk on the loading dock. This usually does not make the entire structure a heated space. The total quantity of heating provided to the space has to exceed 10 Btu/(hr-ft²). Similar logic applies to a mechanical cooling system; if it provides more than 5 Btu/(hr-ft²), it means the space is directly conditioned. Third, it matters at what temperature the space is controlled. Many spaces, such as refrigerated warehouses, are conditioned but are deliberately kept at very hot or cold temperatures. The space conditioning is not for human comfort but to serve the needs of some process, such as preventing vegetables from spoiling. If the space conditioning system is specifically designed and operated to maintain a temperature that is not within the range of 55°F through 90°F and is thermostatically controlled not to operate within this temperature range, then the space is not directly conditioned. Note that these spaces other than refrigerated storage are treated like unconditioned spaces and therefore must meet the lighting requirements.

Enclosed Space *is space that is substantially surrounded by solid surfaces such as* ~~*including*~~ *walls, ceilings or roofs, doors, fenestration areas, and floors or ground*. Spaces that are not enclosed are spaces that are open to the outdoors, such as covered walkways, parking structures that are open or have fenced mechanical enclosures.

Entire Building is the ensemble of all enclosed space in a building, including the space for which a permit is sought, plus all existing conditioned and unconditioned space within the structure. This definition affects lighting compliance within the complete building method.

Habitable Story is a story that contains space in which humans may work or live in reasonable comfort, and that has at least 50 percent~~%~~ of its volume above grade. This definition is important in distinguishing between high-rise and low-rise residential buildings, which are covered by different Standards and are described in separate manuals. Basement floors with more than 50 percent~~%~~ of their volume below grade are not counted as habitable stories regardless of their actual use. In buildings on sloping ground, the calculation of volume below grade can become cumbersome, but for most buildings it will be obvious whether the floor is at least 50 percent~~%~~ above grade.

Indirectly Conditioned Space is enclosed space including, but not limited to, unconditioned volume in atria, that (1) is not directly conditioned space; and (2) either (a) has an area-weighted heat transfer coefficient to directly conditioned space exceeding that to the outdoors or to unconditioned space, or, (b) is a space through which air from directly conditioned spaces is transferred at a rate exceeding three air changes per hour. This definition is important because the Standards treat indirectly conditioned space the same as conditioned space; in other words, indirectly conditioned spaces must meet the requirements of the Standards. As a guide, professional judgment should be exercised when determining whether a space is indirectly conditioned, especially as it relates to door placement in the space. When an enclosed space that is not directly conditioned has openings only into a conditioned space, it should be considered indirectly conditioned. Likewise, when an enclosed space that is not directly conditioned has openings only to the outdoors, it should be considered to be unconditioned. When enclosed spaces that are not directly conditioned have openings both to the outdoors and to conditioned spaces, an evaluation of relative heat transfer and air change rate (UA) should be used to determine the status of the space. A typical example of an indirectly conditioned space might be the stairwell of a high-rise office building. The first part of the definition is that it not be directly conditioned. This is not uncommon in stairwells. The second part of the definition is that it be provided with space conditioning energy from a space that is directly conditioned. This can be done one of two ways. The first is by conduction heat transfer. If heat is transferred in from directly conditioned space (e.g., through the walls of the stairwell) faster than it is transferred out to the unconditioned surroundings, then the space is considered to be indirectly conditioned. The second way is for the space to be ventilated with air from directly conditioned spaces. For example, if exhaust hoods draw air through a kitchen from the dining room at a rate exceeding three air changes per hour, then the kitchen will be considered indirectly conditioned space.

DRAFT

Mechanical Cooling is lowering the temperature within a space using refrigerant compressors or absorbers, desiccant dehumidifiers, or other systems that require energy from depletable sources to directly condition the space. In nonresidential, high-rise residential, and hotel/motel buildings, cooling of a space by direct or indirect evaporation of water alone is not considered mechanical cooling (see also “directly conditioned space”). For buildings covered by this manual, evaporative cooling is not considered mechanical cooling. This means, for example, that a warehouse with only evaporative coolers does not meet the definition of mechanical cooling. Nonresidential buildings with evaporate cooling are unconditioned spaces.

Mechanical Heating is raising the temperature within a space using electric resistance heaters, fossil fuel burners, heat pumps, or other systems that require energy from depletable sources to directly condition the space. If the only source of the heat is a nondepletable source, then the system is not considered mechanical heating. Nondepletable sources would include solar collectors, geothermal sources, and heat recovered from a process, such as refrigeration chillers.

~~**Space Conditioning System** is a system that provides either collectively or individually heating, ventilating, or cooling within or associated with conditioned spaces in a building. The Standards apply to conditioned space, and they~~

~~govern the space conditioning systems that provide the conditioning for those spaces.~~

Unconditioned Space is enclosed space within a building that is not directly conditioned or indirectly conditioned space. Unconditioned spaces are required to meet the Indoor Lighting Standards.

High-Rise Residential *is a building, other than a hotel/motel, of occupancy group R-1 with four or more habitable stories.* California Building Code Occupancy Group R-1 includes apartment houses, convents and monasteries (accommodating more than 10 persons). (See definition of Unconditioned Space above). If a building has four or more habitable stories, any residential occupancy in the building is considered high-rise residential, regardless of the number of stories that are residential.

Hotel/Motel is a building or buildings incorporating six or more guest rooms or a lobby serving six or more guest rooms, where the guest rooms are intended or designed to be used, or which are used, rented, or hired out to be occupied, or which are occupied for sleeping purposes by guests, and all conditioned spaces within the same building envelope. Hotel/motel also includes all conditioned spaces that are (1) on the same property as the hotel/motel, (2) served by the same central HVAC system as the hotel/motel, and (3) integrally related to the functioning of the hotel/motel as such, including, but not limited to, exhibition facilities, meeting and conference facilities, food service facilities, lobbies and laundries. A key part of this definition is that the hotel/motel includes all spaces within the same building envelope as the lobby or the guest rooms. This is because hotel/motel buildings are generally multi-purpose facilities. They may include such diverse spaces as restaurants, auditoriums, retail stores, offices, kitchens, laundries and swimming pools. All are treated as hotel/motel spaces. For hotels/motels with five or less guest rooms low rise residential compliance should be used instead of nonresidential compliance. All hotels/motels should use the low rise residential water heating calculation approach.

DRAFT

This concept extends to other buildings associated with the hotel/motel that pass the three tests:

- Same property.
- Same central HVAC system.
- Integrally related to the hotel/motel.

Mixed Occupancies. The Standards apply to mixed occupancies in the same way they apply to single occupancy buildings. The Low-Rise Residential Standards apply to applicable occupancies; the Nonresidential Standards apply to appropriate occupancies. If these two types occur in the same building, the building must be treated as two separate buildings for purposes of energy compliance, with each part meeting its applicable requirements. An exception provides that if one occupancy makes up ~~90~~80 percent~~%~~ of the building, the entire building may comply with the envelope and mechanical ~~with the~~ provisions of the dominant occupancy. The interior lighting requirements and mandatory measures for the actual occupancy will apply.

Other Occupancy Definitions. There are over 35 additional occupancy definitions in the Standards. They are used primarily to assign lighting area

categories. Refer to the Glossary in Reference Joint Appendix JA1 for these definitions (found alphabetically under "Occupancy Type)".

Example 1-9

Question

If a space were 1,000 ft², how large would the heating system have to be to make the space directly conditioned?

Answer

The heating system would have to be larger than 10 Btu/(hr-ft²) x 1,000 ft² = 10,000 Btu/hr output to meet the definition of directly conditioned space.

Example 1-10

Question

A water treatment plant has a heating system installed to prevent pipes from freezing. The heating system exceeds 10 Btu/(hr-ft²) and operates to keep the space temperature from falling below 50°F. Is this plant directly conditioned?

Answer

Not if the heating system is sized to meet the building load at 50°F and is thermostatically controlled to prevent operating temperatures above 50°F. The definition of directly conditioned space excludes spaces that have space conditioning designed and controlled to be incapable of operating at temperatures above 55°F at design conditions. Under these conditions, the space is not directly conditioned.

Example 1-11

Question

A manufacturing facility will have space cooling to keep the temperature from exceeding 90°F. If the thermostat will not allow cooling below 90°F, is this facility directly conditioned?

DRAFT

Answer

No, this facility is not directly conditioned. The definition of directly conditioned space excludes spaces where the space conditioning system is designed and controlled to be incapable of operating at temperatures below 90°F at design conditions.

Example 1-12

Question

The accompanying sketch shows a building with three unconditioned spaces (none has a direct source of mechanical heating or cooling). The air transfer rate from the adjacent conditioned spaces is less than three air changes per hour. The area weighted heat transfer coefficients of the walls (UA) are shown on the sketch. The roof/ceiling area weighted heat transfer coefficients (UA) for each of the three unconditioned spaces is 90 Btu/Hr -°F.

Are any of these spaces indirectly conditioned?

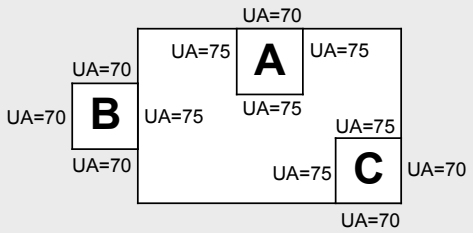

Answer

Because the air change rate is low, we evaluate each space on the basis of heat transfer coefficients through the walls and roof. It is further assumed that the floors are adiabatic. Therefore, the heat transfer will be proportional to the area weighted heat transfer coefficients of the walls and roof/ceilings.

SPACE A: The area weighted heat transfer coefficient to directly conditioned space is 3 x (75 Btu/Hr-°F) = 225 Btu/Hr-°F. The area weighted heat transfer coefficient to the outdoors or to unconditioned space is 70 Btu/Hr-°F + 90 Btu/Hr-°F = 160 Btu/Hr-°F. Since the heat transfer coefficient from Space A to the conditioned space is greater than heat transfer coefficient from Space A to outside, Space A is considered indirectly conditioned.

SPACE B: The area weighted heat transfer coefficient to directly conditioned space is 75 Btu/Hr-°F. The area weighted heat transfer coefficient to the outdoors or to unconditioned space is (3 x 70 Btu/Hr-°F) + 90 Btu/Hr-°F = 300 Btu/Hr-°F. Since the heat transfer coefficient from Space B to the conditioned space is less than the heat transfer coefficient from Space B to outside, Space B is considered unconditioned.

SPACE C: The area weighted heat transfer coefficient to directly conditioned space is (2 x 75 Btu/Hr-°F = 150 Btu/Hr-°F. The area weighted heat transfer coefficient to the outdoors or to unconditioned space is (2 x 70 Btu/Hr-°F) + 90 Btu/Hr-°F = 230 Btu/Hr-°F. Since the heat transfer coefficient from Space C to the conditioned space is less than the heat transfer coefficient from Space C to outside, Space C is considered unconditioned.

Example 1-13

Question

In a~~A~~ four-story building, first ~~has one~~ floor is retail, ~~two~~ second and third floors are offices, and the fourth floor is residential (as defined in the UBC). Is the residential space high-rise or low-rise?

Answer

It is a high-rise residential space. Even though there is only one floor of residential occupancy, the building has four habitable stories, making it a high-rise building.

DRAFT

1.8 About the Standards

History

Section 25402 of the Public Resources Code

The Legislature adopted the Warren-Alquist Act which created the California Energy Commission (Energy Commission) in 1975 to deal with energy-related issues, and charged the Energy Commission with the responsibility to adopt and maintain Energy Efficiency Standards for new buildings. The first Standards

were adopted in 1978 in the wake of the Organization of Petroleum Exporting Countries (OPEC) oil embargo of 1973.

The Act requires that the Standards be cost effective "when taken in their entirety and amortized over the economic life of the structure." It also requires that the Energy Commission periodically update the Standards and develop manuals to support the Standards. Six months after publication of the manuals, the Act directs local building permit jurisdictions to withhold permits until the building satisfies the Standards.

The so-called "First Generation" Standards for nonresidential buildings took effect in 1978, and remained in effect for all nonresidential occupancies until the late 1980s, when the "Second Generation" Standards took effect for offices, retail and wholesale stores.

The next major revision occurred in 1992 when the requirements were simplified and consolidated for all building types. At this time, major changes were made to the lighting requirements, the building envelope and fenestration requirements, as well as the HVAC and mechanical requirements. Structural changes made in 1992 set the way for national standards and other states.

The Standards went through minor revisions in 1995, but in 1998, the lighting power limits were reduced significantly, because at that time, electronic ballasts and T-8 lamps were cost effective and becoming common practice in nonresidential buildings.

The California electricity crisis of 2000 resulted in rolling blackouts through much of the State and escalating energy prices at the wholesale market, and in some areas of the State in the retail market as well. The Legislature responded with AB 970, which required the Energy Commission to update the Energy Efficiency Standards through an emergency rulemaking. This was achieved within the 120 days prescribed by the Legislature and the 2001 Standards (or the AB 970 Standards) took effect mid-year 2001. The 2001 Standards included requirements for high performance windows throughout the State, more stringent lighting requirements and miscellaneous other changes.

The Public Resources Code was amended in 2002 through Senate Bill 5X to expand the authority of the Energy Commission to develop and maintain standards for outdoor lighting and signs. The Standards covered in this manual (the 2008~~5~~ Standards) build from the rich history of nonresidential energy standards in California and the leadership and direction provided over the years by the California Legislature.

The 2008 Standards were expanded to include refrigerated warehouses and steep-sloped roofs for the first time.

~~***Compliance Approaches***~~

~~The Standards provide flexibility to the designer by providing several paths to Standards compliance. There are two basic options for demonstrating that a building meets the requirements of the Standards: the prescriptive approach and the performance approach. With either approach, certain mandatory measures always apply.~~

DRAFT

~~The Standards cover the three major systems of a nonresidential building: the building envelope, the mechanical systems, and the indoor and outdoor lighting systems, including sign lighting. A minor energy user, water heating, is also covered in the mechanical chapter.~~

~~Each system is typically the responsibility of a different design professional. The envelope is designed by an architect, the mechanical systems by a mechanical engineer, and the lighting systems by an electrical engineer or lighting designer. Each of the three systems may be shown to comply independently under the prescriptive approach. Under the performance approach, compliance may be shown for the envelope only, the envelope and mechanical systems, or for all three components together. The building (all three components) may be shown to comply as a whole under the performance approach only when the permit application includes all three components.~~

~~*Prescriptive Approach*~~

~~1.The prescriptive approach is the simpler way to comply with the Standards. Each of the three building systems complies separately from the others. The compliance procedures and documentation are also separate for the three. The prescriptive approach for each system requires that the proposed design meet specific energy efficiency criteria specified by the Standards. If the design fails to meet even one of the requirements, then the system does not comply with the Standards. The performance approach provides the most flexibility to the building designer for choosing alternative energy efficiency features.~~

~~2.*Building Envelope*. The prescriptive envelope requirements are determined either by the envelope component approach or the overall envelope approach. These two approaches are described in detail in Chapter 3 of this manual. The stringency of the envelope requirements varies according to climate zone and occupancy type.~~

~~3.*Mechanical*. The prescriptive mechanical requirements are described in detail in Chapter 4. The prescriptive Standards do not offer any alternative approaches, but specify equipment, features and design procedures that must be followed.~~

~~4.*Indoor Lighting*. The prescriptive lighting power requirements are determined by one of three methods: the complete building method, the area category method, or the tailored method. These three approaches are described in detail in Chapter 5. The allowed lighting under the Standards varies according to the requirements of the particular building occupancy or task requirements.~~

~~5.*Outdoor Lighting*. The Outdoor Lighting Standards are new with 2005 and are described in Chapter 6. They set power limits for various applications such as parking lots, pedestrian areas, sales canopies, building entrances, building facades and signs. The Standards also set minimum requirements for cutoff luminaires and controls.~~

~~0.~~

DRAFT

Example 1-14

Question

If a building is LEED certified does it still need to meet the 2008 Building Energy Efficiency Standards?

Answer

1.8.1 California Climate Zones

Since energy use depends partly upon weather conditions, which differ throughout the State, the Energy Commission has established 16 climate zones representing distinct climates within California. These 16 climate zones are used with both the Residential and the Nonresidential Standards. The boundaries are shown in Figure 1-1-52~~4~~ and detailed descriptions and lists of locations within each zone are available in Reference Joint Appendix JA2~~II~~.

Cities may occasionally straddle two climate zones. In these instances, the exact building location and correct climate zone should be verified before any calculations are performed. If a single building is split by a climate zone boundary line, it must be designed to the requirements of the climate zone in which 50 percent~~%~~ or more of the building is contained.

~~Performance Approach~~

~~The performance approach allows compliance through a wide variety of design strategies and provides greater flexibility than the prescriptive approach. It is based on an energy simulation model of the building. The Standards specify the method for determining an energy budget for the building. This is known as the *custom energy budget,* because it is generated on a case-by-case basis. This energy budget represents the upper limit of energy use allowed for that particular building.~~

DRAFT

Figure 1-5 – California Climate Zones

Four basic steps are involved:

1. Design the building with energy efficiency measures that are expected to be sufficient to meet the energy budget. The prescriptive approach requirements provide a good starting point for the development of the design.
2. Demonstrate that the building complies with the mandatory measures.
3. Using an approved calculation method (state-approved energy compliance software.)
4. Model the energy consumption of the building using the proposed features to create the proposed energy budget. The model will also automatically calculate the allowed energy budget for the proposed building.
5. If the proposed energy budget is no greater than the allowed energy budget, the building complies.

DRAFT

2. Compliance and Enforcement

2.1 Overview

Primary responsibility for compliance and enforcement with the Energy Commission Energy Efficiency Standards rests with the local enforcement agency, typically associated with a city or county government. A building permit must be obtained from the local jurisdiction before a new nonresidential or high-rise residential building, outdoor lighting system, or a sign may be constructed, before constructing an addition, and before significant alterations may be made to existing buildings or systems. Before a permit is issued, the local jurisdiction examines the plans and specifications for the proposed building to verify compliance with all applicable codes and standards. Verification of compliance with the Energy Efficiency Standards (Standards), by comparing the requirements specified on the Certificate of Compliance with the plans and specifications for the building is the enforcement agency's plan check responsibility. The enforcement agency's plans examiner must also verify that the plans and specifications for the building are in compliance with the building, plumbing, electrical, and the mechanical codes ,and all other applicable codes and standards adopted by the local enforcement agency.

Once the enforcement agency has determined that the proposed building (as represented in the plans and specifications) complies with all applicable codes and standards, a Building Permit may be issued at the request of the builder or the owner of the proposed building. This is the first significant milestone in the compliance and enforcement process. After building construction is complete, the enforcement agency issues the Certificate of Occupancy. If the enforcement agency's final inspection determines that the building conforms to the plans and specifications approved during plan check, and complies with all applicable codes and standards, the enforcement agency may approve the building. The enforcement agency's final approval is also a significant milestone.

While obtaining the Building Permit and Certificate of Occupancy are two significant steps, the compliance and enforcement process is significantly more involved and requires participation by a number of other persons and organizations including the architect or building designer, specialty engineers (mechanical, electrical, civil, etc.), building developers, purchasing agent, general contractor, subcontractor/installers, energy consultant, plan checkers, inspectors, realtors, the owner, and third party inspectors (HERS raters). This chapter describes the overall compliance and enforcement process and identifies the responsibilities for each person or organization.

Where the building construction is under the jurisdiction of a state agency, no construction of any state building can begin until the Department of General Services or the state agency that has jurisdiction over the property determines that the construction is designed to comply with the requirements of Part 6 and that the documentation requirements of § 10-103(a)1 have been met, and that the plans indicate the features and performance specifications needed to

DRAFT

comply with Part 6. The responsible state agency must notify the Commission's Executive Director of its determination.

2.2 The Compliance and Enforcement Process

The process of complying with and enforcing the Energy Efficiency Standards involves many parties. Those involved may include the architect or building designer, building developers, purchasing agent, general contractor, subcontractor/installers, energy consultant, plan checkers, inspectors, realtors, the owner, and third party inspectors (HERS raters). Communication between these parties is essential for the compliance/enforcement process to run efficiently.

The standards specify detailed reporting requirements that are intended to provide design, construction, and enforcement parties with needed information to complete the building process and ensure that the energy features are installed.

Each party is accountable for ensuring that the building's energy features are correctly installed as applicable to their area of responsibility.

This section outlines each phase of the process, discussing responsibilities and requirements during the phase.

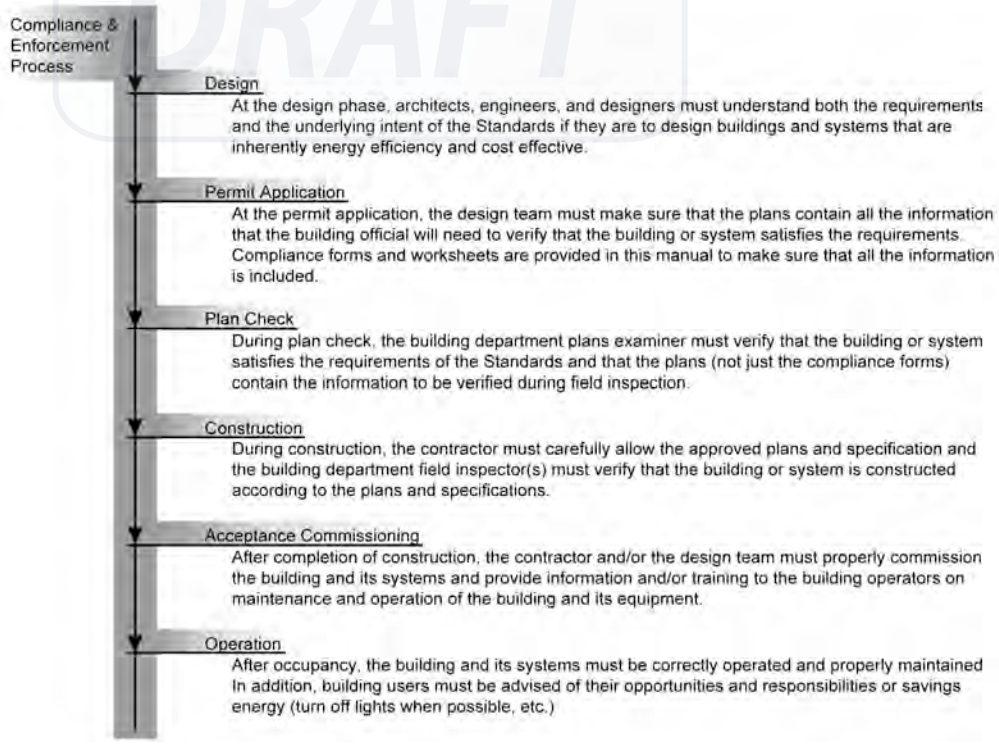

Figure 2-1 – The Compliance and Enforcement Process

2.2.1 Design Phase - Certificate of Compliance

§10-103(a)1

During the design phase the plans and specifications are developed that define the building or system that will be constructed or installed. The design must incorporate features that are in compliance with applicable codes and standards. The building or system overall design must be detailed in the construction documents and specifications, and these documents must be submitted to the enforcement agency for approval.

Parties associated with the design phase must ensure that the building or system design specifications comply with the building energy efficiency standards, and that the specifications for the energy features given on the construction documents are consistent with the Certificate of Compliance for the building or system.

During the design phase, the architect, mechanical engineer and lighting designer must determine whether the building or system design complies with the building energy efficiency standards. An energy consultant or other professional (documentation author) may assist the building designer(s) by providing calculations that determine the energy compliance impact of building features being proposed for the design. Additionally, throughout the design phase, recommendations or alternatives may be suggested by energy consultants or energy documentation author to assist the designer in achieving compliance with the building energy efficiency standards.

The building or system design plans and specifications are required to be complete with regard to specification of the energy efficiency features selected for compliance with the building energy efficiency standards, and the those specifications must be also detailed on the Certificate of Compliance submitted to the enforcement agency. Any change in the design specifications, during any phase of design or construction that changes the energy features specified for the design necessitates recalculation of the energy code compliance and issuance of a revised Certificate of Compliance for approval by the enforcement agency that is consistent with the revised plans and specifications for the proposed building or system. If recalculation indicates that the building no longer complies, alternate building features must be selected that bring the design back into compliance with the building energy efficiency standards; also the plans and specifications documentation for the design must be revised and resubmitted to the enforcement agency for approval.

The discussion in this section emphasizes the need to coordinate energy efficiency feature selection considerations concurrently with other building design considerations as part of the overall design development process so that the completed design specifications represented on the final construction documents submitted to the enforcement agency for approval are complete, consistent with the Certificate of Compliance, thus in compliance with the building energy efficiency standards requirements. The next section on Integrated Design discusses briefly how concurrent development of other aspects of the design can serve to improve the quality of the final design, and diminish the need for revision of the construction documentation later in the plan check or construction process.

Integrated Design

Integrated design is the consideration that brings the design of all related building systems and components together. It brings together the various disciplines involved in designing a building or system and reviews their recommendations as a whole. It recognizes that each discipline's recommendations have an impact on other aspects of the building project. This approach allows for optimization of both building performance and cost. Too often, HVAC systems are designed independently of lighting systems, for example, and lighting systems are designed without consideration of daylighting opportunities. The architect, mechanical engineer, electrical engineer, contractors, and other team members each have their scope of work and often pursue the work without adequate communication and interaction with other team members. This can result in improper system sizing, or systems that are optimized for non-typical conditions.

Even a small degree of integration provides some benefit, allowing professionals working in various disciplines to take advantage of design opportunities that are not apparent when they are working in isolation. This can also point out areas where trade-offs can be implemented to enhance resource efficiency. Design integration is the best way to avoid redundancy or conflicts with aspects of the building project planned by others. The earlier that integration is introduced in the design process, the greater the benefit that can be expected.

For a high performance school, project team collaboration and integration of design choices should begin no later than the programming phase. In addition, the project team is likely to be more broadly defined than in the past, and may include energy analysts, materials consultants, lighting designers, life-cycle cost consultants and commissioning agents. Design activities may expand to include charrettes, modeling exercises, and simulations.

This manual provides details and implementation rules for individual design strategies. Though these individual strategies can improve building or system energy efficiency, whole-building analysis and integrated design can balance energy and cost concerns more effectively.

2.2.2 Permit Application - Certificate of Compliance

§10-103(a)1 §10-103(a)2

When the design is complete, construction documents are prepared, other approvals (planning department, water, etc.) are secured, and the owner, developer, or architect submits an application for a Building Permit to the enforcement agency. Permit application is generally the last step in the process of planning and design. At this point, the infrastructure (streets, sewers, water lines, electricity, gas, etc.) is likely to be in place or is under construction, and the process of preparation for the construction or installation of the building or system design can begin.

A Certificate of Compliance is required to be submitted along with the construction documents, and these documents must be approved by the enforcement agency. If the prescriptive method is utilized for compliance, the Certificate of Compliance documentation forms for the building envelope, mechanical systems, and the lighting systems must all be submitted. If the performance method is utilized for the entire building, a compiled set of Certificate of Compliance documentation pages is prepared utilizing one of the compliance software applications approved by the Energy Commission. Certificate of Compliance documentation requirements are specified in § 10-103(a)1 and 10-103(a)2.

For all buildings, the Certificate(s) of Compliance must be signed by the person(s) eligible under Division 3 of the Business and Professions Code to accept responsibility for the building design to certify conformance with the building energy code. If more than one person has responsibility for building design, each person must sign the Certificate of Compliance document(s) applicable to that portion of the design for which the person is responsible. Alternatively, the person with chief responsibility for design may prepare and sign the Certificate of Compliance document(s) for the entire design. The signatures must be original signatures on paper documents or electronic signatures on electronic documents.

The length and complexity of the Certificate of Compliance documentation may vary considerably depending upon the size and complexity of the building(s) or system(s) that are being permitted, regardless of whether the performance approach or the prescriptive approach is utilized for compliance. The Certificate of Compliance documents are commonly prepared by an energy consultant or an energy compliance professional (documentation author). An energy consultant should be knowledgeable about the details of the requirements of the energy code and can benefit the design team by offering advice for the selection of the compliance methodology (prescriptive or performance), the selection of the energy features utilized for compliance with the Standards, and may also provide recommendations for the most cost effective mix of building energy features for the design.

The Administrative Regulations Section 10-103(a)(2) require that the Certificate(s) of Compliance and any applicable supporting documentation be submitted with permit applications enabling the plans examiner to verify that the

building or system design specifications shown on construction documentation is consistent with the energy features specified on the Certificate of Compliance in order to determine whether the design complies with the Energy Efficiency Standards. The Certificate of Compliance forms submitted to the enforcement agency to demonstrate compliance must be readily legible and of substantially similar format and informational order as those specified in this compliance manual. A listing of Certificate of Compliance forms is given in Table 2-1 below, and copies of these forms are located in Appendix A.

DRAFT

Table 2-1 – Certificate of Compliance Forms

	Envelope	Mechanical	Lighting	Outdoor Lighting
Certificate of Compliance Forms and Worksheets	ENV-1-C Certificate of Compliance ENV-2-C Envelope Component Method ENV-3-C Overall Envelope Method ENV-4-C Skylight Area Support Worksheet	MECH-1-C Certificate of Compliance MECH-2-C Air System, Water Side System, Service Hot Water & Pool Requirements MECH-3-C Mechanical Ventilation MECH-4-C HVAC Misc. Prescriptive Requirements	LTG-1-C Certificate of Compliance LTG-2-C Indoor Lighting Schedule LTG-3-C Portable Lighting Worksheet LTG-4-C Lighting Controls Credit Worksheet LTG-5-C Indoor Lighting Power Allowance LTG-6-C Tailored Method Worksheet LTG-7-C Room Cavity Ratio Worksheet LTG-8-C Common Lighting Systems Method LTG-9-C Line Voltage Track Lighting Worksheet	OLTG-1-C Certificate of Compliance OLTG-2-C Lighting Compliance Summary OLTG-3-C Illuminated Area Calculation Worksheet OLTG-4-C Sign Lighting Compliance

DRAFT

2.2.1 Plan Check

§10-103(d)1

Local enforcement agencies are required to check submitted plans and specifications to determine whether the design conforms to the applicable codes and standards, thus the plan check must include checking the energy efficiency specifications for the design to confirm compliance with the building energy efficiency standards. Vague, missing, or incorrect information on the construction documents may be identified by the plans examiner as requiring correction, and the permit applicant must revise the construction documents to make the corrections or clarifications, then resubmit the revised plans and specifications for verification by the plans examiner. When the permit applicant submits comprehensive, accurate, clearly defined plans and specifications, it helps to speed the plan check process. During plan check, the enforcement agency must verify that the building's design details specified on the construction documents conform to the applicable energy code features information specified on the Certificate of Compliance documents submitted. Since materials purchasing personnel, and building construction craftsmen in

the field may rely solely on a copy of the plans and specifications approved by the enforcement agency for direction in performing their responsibilities, it is of utmost importance that the building design features represented on the approved plans and specifications for the proposed building conform to the energy features specified on the approved Certificate(s) of Compliance.

It is worthwhile to mention here that later in the construction/installation process, the person responsible for construction will be required to sign an Installation Certificate confirming that the installed features, materials, components or manufactured devices conform to the requirements specified in the plans and specifications and the Certificate(s) of Compliance approved by the enforcement agency. If at that time it is determined that the actual construction/installation is not consistent with the approved plans and specifications or Certificate(s) of Compliance, the applicable documentation is required to be revised to reflect the actual construction/installation specifications, and the revised documentation must indicate compliance with the energy code requirements. If necessary, corrective action must be taken in order to bring the construction/installation into compliance. Thus to emphasize, it is of utmost importance that the building design features represented on the approved plans and specifications for the proposed building comply with the energy efficiency standards requirements specified on the approved Certificate(s) of Compliance, and that the actual construction/installation is consistent with those approved documents.

The enforcement agency is responsible for verifying that the compliance documents submitted for plan check do not contain errors. When the compliance documents are produced by an Energy Commission-approved computer software application, it is unlikely that there will be computational errors on the Certificate of Compliance documents, but it is essential that the plans examiner verifies that the building design represented on the proposed plans and specifications is the same building design represented in the Certificate of Compliance documents.

To obtain a list of Energy Commission-approved energy code compliance software applications visit the Commission Website at:

http://www.energy.ca.gov/title24/2005standards/2005_computer_prog_list.html

Or call the Efficiency Standards Hotline at 1-800-772-3300.

2.2.2 Building Permit

§10-103(d)1

After the plans examiner has checked and approved the plans and specifications for the project a building permit may be issued by the enforcement agency at the request of the builder. Issuance of the building permit is the first significant milestone in the compliance and enforcement process. The building permit is the green light for the contractor to begin work. In many cases, the building permits are issued in phases. Sometimes there is a permit for site work and grading that precedes the permit for actual building construction. In large Type I or II buildings, the permit may be issued in several phases: site preparation, structural steel, etc.

2.2.3 Construction Phase - Installation Certificate

§10-103(a)3A

Upon receiving a building permit from the local enforcement agency, the general contractor can begin construction. The permit requires the contractor to construct the building or system in substantial compliance with the approved plans and specifications, but often there are variations. Some of these variations are formalized by the contractor through change orders. When change orders are issued, it is the responsibility of the design team and the local enforcement agency to verify that compliance with the energy code is not compromised by the change order. In some cases, it is obvious that a change order could compromise energy code compliance, for instance when an inexpensive single glazed window is substituted for a more expensive high performance window. However, it may be difficult to determine whether a change order would compromise compliance, for instance when the location of a window is changed or when the orientation of the building with respect to the direction north is changed. Field changes that result in non-compliance require enforcement agency approval of revised plans and energy compliance documentation to confirm that the building is still in compliance.

During the construction process, the general contractor or specialty subcontractors are required to complete various construction certificates. These certificates verify that the contractor is aware of the requirements of the building energy efficiency standards, and that the actual construction/installation meets the requirements.

Installation Certificates are required to be completed and submitted to certify compliance of regulated energy features such as windows, water heater, plumbing, HVAC ducts and equipment, and building envelope insulation. The licensed person responsible for the building construction, or for the installation of a regulated energy feature must ensure their construction or installation work is done in accordance with the approved plans and specifications for the building, and must complete and sign an Installation Certificate to certify that the installed features, materials, components or manufactured devices for which they are responsible, conform to the plans and specifications and the Certificate of Compliance documents approved by the enforcement agency for the building. A copy of the completed signed and dated Installation Certificate must be posted at the building site for review by the enforcement agency in conjunction with requests for final inspection for the building.

If construction on any regulated feature or portion of the building will be impossible to inspect because of subsequent construction, the enforcement agency may require the Installation Certificate(s) to be posted upon completion of that portion. A copy of the Installation Certificate(s) must be included with the documentation the builder provides to the building owner at occupancy as specified in §10-103(b)

If for any reason the approved plans and specifications and Certificate(s) of Compliance for the building are inconsistent with regard to their requirements for the building, or if the actual construction/installation performed does not conform to the approved plans and specifications and Certificate(s) of Compliance, corrective action must be performed to bring all approved documentation and the actual installation into compliance prior to completion and submittal of the

Installation Certificate. A listing of Installation Certificate forms is given in Table 2-2 below, and copies of the forms are located in Appendix A.

Table 2-2 – Installation Certificate Forms

Component	Form Name	Standards Reference	Reference Nonresidential Appendix
Envelope	ENV-INST		
Mechanical	MECH-INST		
Lighting	LGT-INST		
Outdoor Lighting	OTLG-INST		
Sign Lighting			

2.2.4 Acceptance Testing - Certificate of Acceptance

§10-103(a)3B

Acceptance testing or acceptance criteria verification is required for certain lighting, HVAC controls, air distribution ducts, and envelope features, and for equipment that requires proper calibration at the time of initial commissioning in order to ensure that operating conditions that could lead to premature system failure are prevented, and optimal operational efficiency is realized. The features that require acceptance testing are listed in Table 2-3 below.

Table 2-3 – Measures Requiring Acceptance Testing

Category	Measure
Envelope	
Fenestration Acceptance	Fenestration – Label Certificate Verification
Mechanical	
Outdoor Air	Variable Air Volume Systems Outdoor Air Acceptance Constant Volume System Outdoor Air Acceptance
HVAC Systems	Constant- Volume Single Zone, Unitary A/C and Heat Pumps
Air Distribution Systems	Air Distribution Acceptance
Air Economizer Controls	Economizer Acceptance
Demand Control Ventilation (DCV) Systems	Packaged Systems DCV Acceptance
Variable Frequency Drive Systems	Supply Fan Variable Flow Controls
Hydronic System Controls Acceptance	Valve Leakage Test Hydronic Variable Flow Controls Supply Water Temperature Reset Controls
Mechanical Systems	Automatic Demand Shed Control Acceptance Fault Detection & Diagnostics for DX Units Automatic Fault Detection & Diagnostics for Air Handling & Zone Terminal Units Distributed Energy Storage DX AC Systems Test Thermal Energy Storage (TES) Systems
Lighting	
Indoor Lighting Control Systems	Automatic Daylighting Controls Acceptance Occupancy Sensor Acceptance Manual Daylighting Controls Acceptance Automatic Time Switch Control Acceptance
Outdoor Lighting	
Outdoor Lighting Control	n Sensor Acceptance Outdoor Lighting Shut-off Controls • Outdoor Photocontrol • Astronomical Time Switch • Standard (non-astronomical) Time Switch

DRAFT

Acceptance testing must be conducted, and a Certificate of Acceptance must be completed and submitted before the enforcement agency can issue the certificate of occupancy. The procedures for performing the acceptance tests are documented in Reference Nonresidential Appendix NA7.

Compliance with the acceptance requirements for a construction/installation project is accomplished by three main categories of verification and documentation:

- Plan review.
- Construction inspection and Installation Certificate verification.
- Functional testing and completion of the Certificate of Acceptance.

Plan Review

The installing contractor, engineer/architect of record, or owner's agent is responsible for reviewing the plans and specifications and ensuring they conform to the requirements of the Certificate of Compliance and the acceptance requirements applicable to the construction/installation. Plan Review should be done prior to signing a Certificate of Compliance for submittal to plan check, and also prior to completing and signing the Installation Certificate. The person responsible for performing the acceptance tests is required to confirm that the Installation Certificate has been properly completed and signed as a prerequisite to issuance of a Certificate of Acceptance.

To the extent that making changes on paper documents may be less costly as compared to the cost of altering or replacing a completed but non-compliant building energy feature construction/installation, attention should be given to plan review early in the process, and also at critical decision points such as during subcontractor bid proposal review and materials procurement activities. If design or material specification for the construction/installation is changed subsequent to plan check approval by the enforcement agency, revised plans and specifications and Certificates of Compliance must be submitted for approval to the enforcement agency.

Construction Inspection and Installation Certificate Verification

The installing contractor, engineer/architect of record or owner's agent is responsible for performing construction inspection to confirm compliance of the regulated energy features, and must insure that a properly completed Installation Certificate has been submitted or posted at the building site prior to proceeding with functional testing and completion of the Certificate of Acceptance.

All regulated energy features, materials, components, or manufactured devices that were incorporated into the completed construction/installation must be inspected to confirm that they conform to the requirements detailed on the plans and specifications, and the Certificate(s) of Compliance approved by the local enforcement agency. The Installation Certificate must be verified to be properly completed, signed by the person responsible for the construction/installation, and a copy is submitted/posted on the job site with the building permits or made available for applicable inspections. Corrective action must be taken if the installation/construction is not in compliance with the plans and specifications and Certificate of Compliance approved by the enforcement agency, or if an Installation Certificate has not been properly completed and posted. Corrective action must be performed prior to proceeding with the acceptance tests and prior to proceeding with completion and submittal or posting of the Certificate of Acceptance.

Functional Testing and completion of the Certificate of Acceptance

The installing contractor, engineer/architect of record or owner's agent is responsible for insuring that all applicable acceptance requirement procedures identified in the plans and specifications and in Reference Nonresidential Appendix NA7 are conducted. All performance deficiencies must be corrected, and the acceptance requirement verification procedures must be repeated until all specified systems and equipment conform to the required performance

criteria, and the construction/installation is confirmed to be in compliance with the Standards.

The installing contractor, engineer/architect of record, or owner's agent is responsible for documenting the results of the acceptance requirement verification procedures, including paper or electronic copies of the measurement and monitoring results. They are responsible for performing data analysis, calculation of performance indices and cross-checking results with the Standard. They are responsible for issuing a Certificate of Acceptance.

A copy of the Certificate(s) of Acceptance must be posted or made available with the building permit(s) issued for the construction/installation, and must be made available to the enforcement agency for all applicable inspections. If construction on any regulated feature or portion of the building will be impossible to inspect because of subsequent construction, the enforcement agency may require the Certificate(s) of Acceptance to be posted upon completion of that portion. A copy of the Certificate of Acceptance must be included with the documentation the builder provides to the building owner at occupancy as specified in §10-103(b).

Certificate of Acceptance Forms

Acceptance tests are required to be documented using the applicable forms. Table 2-4 lists Envelope, Lighting, and Mechanical Certificate of Acceptance Forms and provides references to applicable sections of the Standards and the Reference Nonresidential Appendix NA7. Copies of the forms are located in Appendix A.

DRAFT

Table 2-4 – Certificate of Acceptance Forms

Component	Form Name	Standards Reference	Reference Nonresidential Appendix
Certificate of Acceptance	Combination LTG-1A , OTLG -1A, MECH-1A, and ENV-1A	§10-103	N/A
Envelope	ENV-2A – Fenestration Acceptance	10-111 & §116	NA7.4.1
Mechanical	MECH-2A - Ventilation Systems - Variable and Constant Volume Systems	10-103(b)4 & §121(b)2	NA7.5.1.1 NA7.5.1.2
	MECH-3A – Constant-Volume, Single-Zone, Unitary A/C and Heat Pumps	§121(b)2	NA7.5.2
	MECH-4A - Air Distribution Systems -	§144(e)	NA7.5.3
	MECH-5A – Air Economizer Controls	§144(k)	NA7.5.4
	MECH-6A - Demand Control Ventilation (DVC)	§121(c)4E	NA7.5.5
	MECH-7A - Supply Fan Variable Flow Controls (VFC)	§144(c)	NA7.5.6
	MECH-8A – Valve Leakage Test	§144(j)6	NA7.5.7
	MECH-9A - Supply Water Temperature Reset	§125(a)9 & 144(j)4	NA7.5.8
	MECH-10A - Hydronic System Variable Flow Control	§125(a)7 & 144(j)1	NA7.5.9
	MECH-11A - Automatic Demand Shed Control Acceptance	§122(h) & 125(a)10	NA7.5.10
	MECH-12A - Fault Detection & Diagnostics for DX Units	§125(a)11	NA7.5.11
	MECH-13A - Automatic Fault Detection & Diagnostics for Air Handling & Zone Terminal Units	§125(a)12	NA7.5.12
	MECH-14A - Distributed Energy Storage DX AC Systems Test	§125(a)13	NA7.5.13
	MECH-15A - Thermal Energy Storage (TES) Systems	§125(a)14	NA7.5.14
Lighting	LTG-2A - Lighting Controls	§119(d) and §131(d)	NA7.6.2, 6.3 and 6.4
	LTG-3A - Automatic Daylighting	§119(f)	NA7.6.1
Outdoor Lighting	OLTG-2A – Outdoor Motion Sensor Acceptance	§119(d) and §132(a)	NA7.7.1
	OLTG-3A– Outdoor Lighting Shut-off Controls	§132(c)	NA7.7.2

DRAFT

2.2.5 HERS Verification – Certificate of Field Verification and Diagnostic Testing

When single-zone, constant volume air distribution systems serving less than 5,000 ft^2 of floor area have more than 25 percent of the system duct area located in unconditioned space, duct sealing is prescriptively required by §144(k). A third-party inspection and diagnostic test of the duct system must be

conducted by a certified HERS rater to verify that the system air distribution duct leakage is within specifications required by the Standards.

The Energy Commission approves Home Energy Rating System (HERS) providers, subject to the Commission's HERS Regulations. Approved HERS providers are authorized to train and certify HERS raters and are required to maintain quality control over HERS rater field verification and diagnostic testing activities.

http://www.cheers.org

http://www.calcerts.com

http://www.cbpca.org

The certified HERS providers are California Home Energy Efficiency Rating System (CHEERS), California Certified Energy Rating & Testing Services (CalCERTS) and California Building Performance Contractors Association (CBPCA).

The HERS rater must perform field verification and diagnostic testing of the air distribution ducts and transmit all required data describing the results to a HERS provider data registry. The HERS rater must confirm that the air distribution ducts conform to the design detailed on the plans and specifications and the Certificate of Compliance approved by the enforcement agency for the building, and that applicable information on the Installation Certificate and Certificate of Acceptance is consistent with the Certificate of Compliance. The test results reported on the Certificate of Acceptance for the air distribution ducts must be consistent with the test results determined by the HERS rater's diagnostic verification and meet the criteria for compliance with the Standards.

Results from the rater's field verification and diagnostic test must be reported to the HERS provider Data registry regardless of whether the result indicates compliance. If the results indicate compliance, the HERS provider data registry will make available a registered copy of the Certificate of Field Verification and Diagnostic Testing. A registered copy of the Certificate of Field Verification and Diagnostic Testing must be posted at the building site for review by the enforcement agency, and made available for all applicable inspections. A copy of the Certificate of Field Verification and Diagnostic Testing must be included with the documentation the builder provides to the building owner at occupancy as specified in §10-103(b). A listing of Certificate of Field Verification and Diagnostic Testing forms is given in Table 2-5 below, and copies of the forms are located in Appendix A.

Table 2-5– Certificate of Field Verification and Diagnostic Testing Forms

Component	Form Name	Standards Reference	Reference Nonresidential Appendix
Mechanical	**MECH-4-HERS Air Distribution System Leakage Diagnostic**		**NA1; NA2**

2.2.6 Final inspection by the enforcement agency and issuance of the Certificate of Occupancy

§10-103(d)2

Local enforcement agencies, or their representatives must inspect all new buildings or systems to ensure conformance with applicable codes and standards. The inspector may require that corrective action be taken to bring the construction/installation into compliance. Thus, the total number of inspection visits and the timing of the inspections that may be required before passing the final inspection may depend on the size and complexity of the building or system.

Enforcement agencies are required to withhold issuance of a final Certificate of Occupancy until all compliance documentation is submitted certifying that the specified systems and equipment conform to the requirements of the Standards.

2.2.7 Occupancy Permit

The final step in the compliance and enforcement process is when an Occupancy Permit is issued by the enforcement agency . This is the green light for the building to be occupied. Although a developer may lease space prior to the issuance of the occupancy permit, the tenant cannot physically occupy the space until the enforcement agency issues the occupancy permit. The building is not legally habitable until the Occupancy Permit is issued.

2.2.8 Occupancy - Compliance, Operating, and Maintenance Information

§10-103(b)

At the occupancy phase, the general contractor and/or design team is required to provide the owner with copies of the energy compliance documents for the construction/installation, and operating, maintenance, and ventilation information and all documentation that provides instruction for operating and maintaining the features of the building efficiently.

2.3 Compliance Documentation

Building energy compliance documentation (Compliance Documentation) includes the forms, reports and other information that are submitted to the enforcement agency with an application for a building permit (Certificate of Compliance). Compliance documentation also includes documentation completed by the installing contractor, engineer/architect of record, or owner's agent to verify that certain systems and equipment have been correctly installed and commissioned (Installation Certificate, and Certificate of Acceptance). Compliance documentation may include reports and test/inspection results by third party HERS raters (Certificate of Field Verification and Diagnostic Testing).

Each portion of the applicable compliance documentation must be completed and/or submitted at:

the building permit phase,

the construction phase,

the testing and verification phase,

the final inspection phase.

All submitted building energy compliance documentation is required to be compiled by the builder or general contractor, and copies of the compliance documentation provided to the building owner so that the end user has information describing the energy features that are installed in the building.

2.3.1 Construction Documents

Construction documentation consists of the plans and specifications for construction of the building or installation of the system, and also includes the energy calculations and the energy compliance (Certificate of Compliance) forms necessary to demonstrate that the building complies with the Building Energy Efficiency Standards requirements. The plans and specifications, referred to as the construction documents (or CDs), define the scope of work to be performed by the general contractor and the subcontractors.

2.3.2 Certificate of Compliance Forms

For nonresidential buildings, the Certificate of Compliance forms are sometimes prepared by an energy consultant. The energy consultant must communicate and coordinate his energy compliance analysis with the building designer and/or the building owner in order to review the most current revision of the building plans to determine if they comply with the Standards. The energy consultant may recommend energy feature alternatives to assist the builder or designer to achieve compliance in the most cost-effective manner. The energy consultant's role mainly encompasses completion of the Certificate of Compliance and other related forms described in this manual that are submitted to the enforcement agency with the plans and specifications for the construction/installation.

When a building permit application is submitted to the enforcement agency, the applicant also submits plans and energy compliance documentation.

2.3.3 Signing Responsibilities

The Certificate of Compliance must be signed by the person responsible for preparation of the plans and specifications for the building and the documentation author. This principal designer is also responsible for the energy compliance documentation, even if the actual work of filling out the forms for the energy compliance documentation is delegated to someone else (the Documentation Author described above).

The Certificate of Compliance is utilized by the building permit applicant, the enforcement agency plans examiner, and the field inspector. This way, the permit application can call the plans examiner's attention to the relevant drawings sheets and other information and the plans examiner can call the field inspector's attention to items that may require special attention in the field. The compliance forms and worksheets encourage communications and coordination

within each discipline. The Certificate of Compliance documentation approved by the enforcement agency is required to be consistent with the plans and specifications approved by the enforcement agency.

The Business and Professions Code specifies the requirements for professional responsibility for design and construction of buildings. Energy code compliance documentation certification statements require that a person who signs a compliance document shall be a licensed professional who is eligible under Division 3 of the Business and Professions Code to accept responsibility for the applicable design or construction information contained on the submitted compliance form. The Certificate of Compliance must be signed by an individual eligible to accept responsibility for the design of the construction/installation. Installation Certificates and Certificates of Acceptance must be signed by the individual eligible to take responsibility for construction, or their authorized representative.

Applicable sections from the Business and Professions Code (based on the edition in effect as of July 1998), are provided as follows:

5537. (a) This chapter does not prohibit any person from preparing plans, drawings, or specifications for any of the following:

(1) Single-family dwellings of woodframe construction not more than two stories and basement in height.

(2) Multiple dwellings containing no more than four dwelling units of woodframe construction not more than two stories and basement in height. However, this paragraph shall not be construed as allowing an unlicensed person to design multiple clusters of up to four dwelling units each to form apartment or condominium complexes where the total exceeds four units on any lawfully divided lot.

(3) Garages or other structures appurtenant to buildings described under subdivision (a), of woodframe construction not more than two stories and basement in height.

(4) Agricultural and ranch buildings of woodframe construction, unless the building official having jurisdiction deems that an undue risk to the public health, safety, or welfare is involved.

(b) If any portion of any structure exempted by this section deviates from substantial compliance with conventional framing requirements for woodframe construction found in the most recent edition of Title 24 of the California Code of Regulations or tables of limitation for woodframe construction, as defined by the applicable building code duly adopted by the local jurisdiction or the state, the enforcement agency having jurisdiction shall require the preparation of plans, drawings, specifications, or calculations for that portion by, or under the responsible control of, a licensed architect or registered engineer. The documents for that portion shall bear the stamp and signature of the licensee who is responsible for their preparation. Substantial compliance for purposes of this section is not intended to restrict the ability of the enforcement agency to approve plans pursuant to existing law and is only intended to clarify the intent of Chapter 405 of the Statutes of 1985.

5537.2. This chapter shall not be construed as authorizing a licensed contractor to perform design services beyond those described in Section 5537 or in

Chapter 9 (commencing with Section 7000), unless those services are performed by or under the direct supervision of a person licensed to practice architecture under this chapter, or a professional or civil engineer licensed pursuant to Chapter 7 (commencing with Section 6700) of Division 3, insofar as the professional or civil engineer practices the profession for which he or she is registered under that chapter.

However, this section does not prohibit a licensed contractor from performing any of the services permitted by Chapter 9 (commencing with Section 7000) of Division 3 within the classification for which the license is issued. Those services may include the preparation of shop and field drawings for work which he or she has contracted or offered to perform, and designing systems and facilities which are necessary to the completion of contracting services which he or she has contracted or offered to perform.

However, a licensed contractor may not use the title "architect," unless he or she holds a license as required in this chapter.

5538. This chapter does not prohibit any person from furnishing either alone or with contractors, if required by Chapter 9 (commencing with Section 7000) of Division 3, labor and materials, with or without plans, drawings, specifications, instruments of service, or other data covering such labor and materials to be used for any of the following:

(a) For nonstructural or nonseismic storefronts, interior alterations or additions, fixtures, cabinetwork, furniture, or other appliances or equipment.

(b) For any nonstructural or nonseismic work necessary to provide for their installation.

(c) For any nonstructural or nonseismic alterations or additions to any building necessary to or attendant upon the installation of those storefronts, interior alterations or additions, fixtures, cabinetwork, furniture, appliances, or equipment, provided those alterations do not change or affect the structural system or safety of the building.

6737.1. (a) This chapter does not prohibit any person from preparing plans, drawings, or specifications for any of the following:

(1) Single-family dwellings of woodframe construction not more than two stories and basement in height.

(2) Multiple dwellings containing no more than four dwelling units of woodframe construction not more than two stories and basement in height. However, this paragraph shall not be construed as allowing an unlicensed person to design multiple clusters of up to four dwelling units each to form apartment or condominium complexes where the total exceeds four units on any lawfully divided lot.

(3) Garages or other structures appurtenant to buildings described under subdivision (a), of woodframe construction not more than two stories and basement in height.

(4) Agricultural and ranch buildings of woodframe construction, unless the building official having jurisdiction deems that an undue risk to the public health, safety or welfare is involved.

(b) If any portion of any structure exempted by this section deviates from substantial compliance with conventional framing requirements for woodframe

construction found in the most recent edition of Title 24 of the California Administrative Code or tables of limitation for woodframe construction, as defined by the applicable building code duly adopted by the local jurisdiction or the state, the enforcement agency having jurisdiction shall require the preparation of plans, drawings, specifications, or calculations for that portion by, or under the direct supervision of, a licensed architect or registered engineer. The documents for that portion shall bear the stamp and signature of the licensee who is responsible for their preparation.

6737.3. A contractor, licensed under Chapter 9 (commencing with Section 7000) of Division 3, is exempt from the provisions of this chapter relating to the practice of electrical or mechanical engineering so long as the services he or she holds himself or herself out as able to perform or does perform, which services are subject to the provisions of this chapter, are performed by, or under the responsible supervision of a registered electrical or mechanical engineer insofar as the electrical or mechanical engineer practices the branch of engineering for which he or she is registered.

This section shall not prohibit a licensed contractor, while engaged in the business of contracting for the installation of electrical or mechanical systems or facilities, from designing those systems or facilities in accordance with applicable construction codes and standards for work to be performed and supervised by that contractor within the classification for which his or her license is issued, or from preparing electrical or mechanical shop or field drawings for work which he or she has contracted to perform. Nothing in this section is intended to imply that a licensed contractor may design work which is to be installed by another person

DRAFT

2.4 Roles and Responsibilities

Effective compliance and enforcement requires coordination and communication between the architects, engineers, lighting and HVAC designers, permit applicant, contractors, plans examiner and the field inspector.[1] This manual recommends procedures to improve communication and, therefore, compliance with the Standards.

The building design and construction industry, as well as enforcement agencies are organized around engineering disciplines.[2] The design of the building's electrical and lighting system is typically the responsibility of the lighting designer, electrical engineer or electrical contractor. This person is responsible for designing a system that meets the Standards, producing the plans and specifications, and for completing the compliance forms and worksheets. In larger building departments, an electrical plans examiner is responsible for reviewing the electrical plans, specifications and compliance documents and an electrical field inspector is responsible for verifying the correct installation of the systems in the field. This same division of responsibility is typical for the mechanical systems: the mechanical plans examiner is responsible for reviewing the mechanical plans; and the mechanical field inspector is responsible for verifying correct construction in the field. For the building envelope, the architect is typically responsible for designing the building and completion of the forms, the enforcement agency is responsible for reviewing the design and forms and the enforcement agency field inspector is responsible for verifying the construction in the field.

Unless the whole building performance approach is used, the compliance and enforcement process can be completed separately for each discipline. This enables each discipline to complete its work independently of others. To facilitate this process, compliance forms have been grouped by discipline.

DRAFT

[1] For small projects, an architect or engineer may not be involved and the contractor may be the permit applicant.

[2] Small building departments may not have this type of specialization.

These groupings include Standards worksheets for calculations and a summary form which includes a checklist. Permit Applicant Responsibilities

The permit applicant is responsible for:

- Providing information on the plans and/or specifications to enable the enforcement agency to verify that the building complies with the Standards. It is important to provide all necessary detailed information on the plans and specifications. The plans are the official record of the permit and the field inspector may not use a copy of the energy worksheets or compliance forms when conducting inspections in the field. The design professional is responsible for certifying that the plans and specifications are consistent with the energy features listed on the Certificate of Compliance, and the design is in compliance with the Building Energy Efficiency Standards.
- Performing the necessary calculations to show that the building or system meets the Standards. These calculations may be documented on the drawing or on the worksheets provided in the manual and supported when necessary with data from national rating organizations or product and/or equipment manufacturers.
- Completing the Certificate of Compliance. The Certificate of Compliance is a listing of each of the major requirements of the Standards. The summary form includes information from the worksheets and references to the plans where the plans examiner can verify that the building or system meets the Standards.

2.4.1 Plans Examiner Responsibilities

The plans examiner is responsible for:

- Reviewing the plans and supporting material to verify that they contain the necessary information for a plan check.
- Checking the calculations and data contained on the worksheets.
- Indicating by checking a box on the summary forms that the compliance documentation is acceptable.
- Making notes for the field inspector about which items require special attention.

DRAFT

2.4.2 Field Inspector Responsibilities

The field inspector is responsible for:

- Verifying that the building or system is constructed according to the plans.
- Checking off appropriate items on the summary form at each relevant inspection.

The Certificate of Compliance may be used by the building permit applicant, the plans examiner and the field inspector. This way, the permit application can call the plans examiner's attention to the relevant drawings sheets and other information and the plans examiner can call the field inspector's attention to items that may require special attention in the field. The compliance forms and worksheets encourage communications and coordination within each discipline.

DRAFT

3. Building Envelope

This chapter describes the requirements for the design of the building envelope for nonresidential buildings. Loads from the building envelope, especially windows, ~~and~~ skylights, and roofs are among the most significant loads that affect heating and cooling energy use. The principal components of heating loads are infiltration through the building envelope and conduction losses through building envelope components, including walls, roofs, floors, slabs, windows and doors. Cooling loads however are dominated by solar gains through the windows and skylights. Outside air ventilation loads and lighting loads are also quite significant, but these are addressed in the Mechanical Systems and Lighting Systems chapters.

The design of the building envelope is generally the responsibility of an architect, although a contractor, an engineer, or some other person may do it. The designer is responsible for making sure that the building envelope complies with the Standards. Likewise, the building official is responsible for making sure that the building envelope is designed and built in conformance with the Standards. This chapter is written for the designer and the building official, as well as other specialists who participate in the design and construction of the building envelope.

3.1 Overview

The Standards have both mandatory measures and prescriptive requirements that affect the design of the building envelope. These requirements establish a minimum level of performance, which can be exceeded by advanced design options or construction practices. These advanced design options are discussed later in this chapter. Those design options that are recognized for credit in the performance approach are called compliance options. Compliance options have eligibility criteria that must be satisfied before compliance credit is offered.

This chapter is organized by building system or building envelope component as follows:

- 3.1 Overview
- 3.2 Fenestration
- 3.3 Opaque Envelope Insulation
- 3.4 ~~Cool Roofs~~Roofing Products (Cool Roofs)
- 3.5 Infiltration and Air Leakage
- 3.6 Relocatable Public School Buildings
- 3.7 Overall Envelope Approach
- 3.8 Performance Approach

- 3.9 Additional and Alterations

3.1.1 Prescriptive Component Envelope Approach ~~Requirements~~

Standards Table 143-A, B and C

This~~The~~ prescriptive ~~requirements consist~~compliance approach consists of meeting ~~a~~ specific requirements for each envelope component: roofs and ceilings, exterior roofing products, exterior walls, demising walls, external floors and soffits, windows, and skylights. Each opaque assembly has to meet a minimum insulation level. Each glazing component has to meet insulating and solar heat gain coefficient (SHGC) values, and there is an upper limit on glazing area. If these requirements are met, the building envelope complies with the Standards.

The prescriptive requirements (Envelope Component Approach §143) are shown in Standards Table 143-A for nonresidential buildings and Standards Table 143-B for high-rise residential buildings and hotel/motel buildings. Standards Table 143-C shows climate independent prescriptive envelope criteria~~requirements~~ for relocatable public school buildings. The prescriptive requirements are the easiest way to comply with the building envelope requirements, but there is little flexibility, since each component of the building envelope must comply with its requirements. If each and every prescriptive requirement is met, the building envelope complies prescriptively with the standards.

Under the Component Envelope Approach, each of the envelope assemblies (walls, roofs, floors, windows, skylights) must comply individually with its requirement. If one component of the envelope does not comply, the entire envelope does not comply. The simplicity of this approach means there can be no trade-offs between components. If one or more of the envelope components cannot meet its requirement, the alternative is to use either the overall envelope TDV energy approach or the performance approach, either of which allows tradeoffs between components.

Standards Tables 143-A and 143-B are organized in a similar manner and are climate zones based. Each climate zone has its own specific prescriptive requirements for roofs and ceilings, exterior roofing products, exterior walls, demising walls, external floors and soffits, windows, and skylights.~~; it could be insulation U-factor, window U-factor or skylight SHGC.~~ ~~grouped into five different climate regions shown as columns in the tables. One set of criteria (column) applies to climate zones 1 and 16, the colder portions of the state in the north coast and mountains. Another applies to the middle coast (climates 3 through 5). The other regions include the south coast (climate zones 6 through 9); the inland valleys (climate zones 2, and 10 through 13), and the southern desert (climate zones 14 and 15). Figure 1-1 shows these climate regions.~~

The top portions of the prescriptive tables have requirements for the opaque portions of the building envelope, including roofing~~s~~ products, walls, and floors. The criteria ~~are~~ are given ~~in two ways, as minimum insulation R-values with~~

~~some constraints on when this can be used and~~ as maximum U-factors; nominal insulation R value compliance is no longer permitted under the 2008 Standards. The U-factor criteria in turn are given for different classes of construction. For walls, U-factor criteria are given for wood framed walls, metal-framed walls, metal building walls, and high and low mass walls. For floors, criteria are given for mass floors and other floors.

~~Under the Component Envelope Approach, each of the envelope assemblies (walls, roofs, floors, windows, skylights) must comply individually with its requirement. If one component of the envelope does not comply, the entire envelope does not comply. The simplicity of this approach means there can be no trade-offs between components. If one or more of the envelope components cannot meet its requirement, the alternative is to use either the overall envelope or the performance approach, either of which allows tradeoffs between components.~~

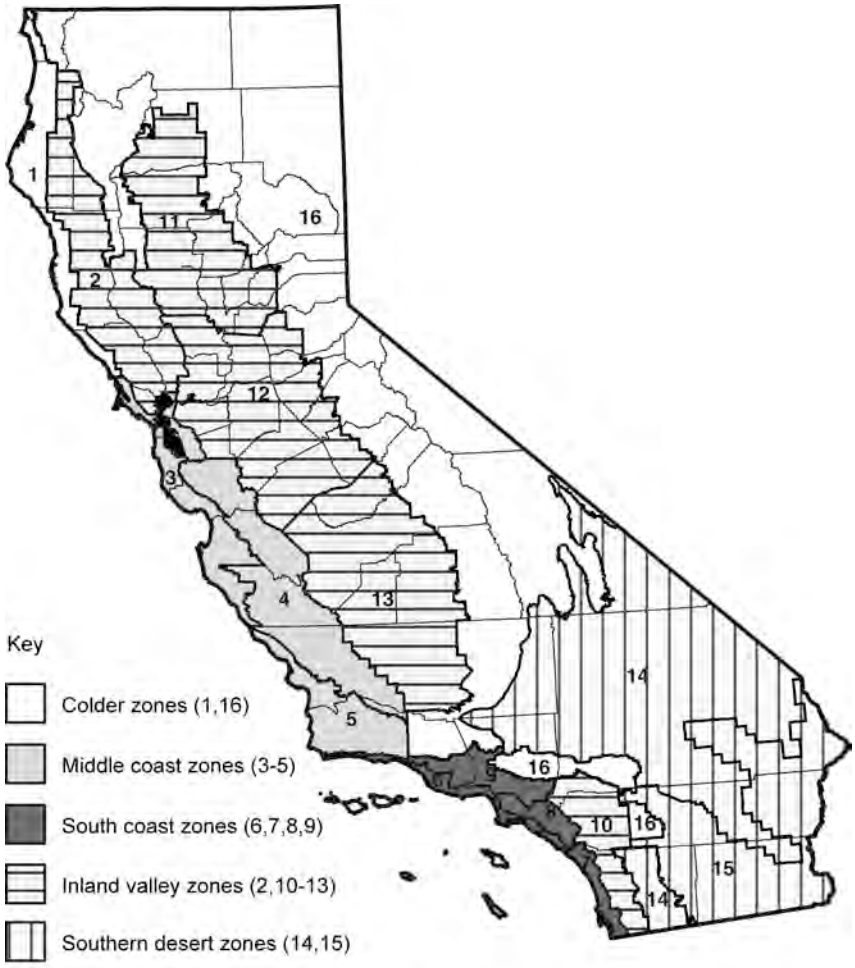

Source: California Energy Commission

Figure 3-1 – Nonresidential Climate Regions

3.1.2 Prescriptive Overall Envelope Approach

§143(b)

The overall envelope TDV energy approach treats envelope components as a system and offers the ability to make simple trade-offs between envelope components. §143(b) of the Standards describes the overall envelope TDV energy approach. The overall envelope TDV energy approach allows the performance of some building envelope components to be increased while the performance of others is reduced. For instance, the energy impact of single-paned windows could be offset by additional wall and roof insulation. The overall envelope TDV energy approach combines the heat loss and heat gain equations into a single tradeoff equation that calculates the annual TDV energy of space cooling and heating based on the thermal performance of envelope. Tradeoffs would be compared ~~in~~using TDV energy instead of source energy, which ~~would~~ allows for tradeoffs between cooling and heating aspects of the envelope ~~to be done~~ in one equation. The impacts of each building envelope component are estimated by a set of weighting coefficients that are dependent on climate and building type. TDV energy for the proposed building is calculated according to procedures in Reference Appendix NA7. TDV energy of the standard building, which minimally complies with prescriptive requirements, is also calculated. A~~a~~s long as overall envelope TDV energy ~~equation is greater than or equal to zero~~of the proposed building does not exceed the TDV energy of the standard building,~~heat gain and loss are no greater than~~ the~~a~~ building is in minimum compliance with the prescriptive requirements.

The overall envelope TDV energy approach permits tradeoffs between many building envelope components, but no tradeoffs are permitted with the interior lighting system or mechanical systems. The performance approach is required in order to make these tradeoffs.

~~The overall envelope approach uses two measures of envelope performance: the overall heat loss and the overall heat gain. The overall heat loss is a measure of the insulating quality of all the envelope components together, including both opaque and glazing surfaces. The overall heat gain considers insulation, solar heat gain through windows and skylights, and the reflectance of the roof.~~

~~The code baseline for both heat gain and heat loss is determined using the insulation and solar heat gain coefficient values from the prescriptive requirements, applying them to the envelope surface areas of the proposed building (with some limits on glazing area). The proposed design's overall heat loss and heat gain are calculated based on the installed insulation, fenestration performance, and roof surface properties. If the proposed heat loss and heat gain are no higher than the standard heat loss and heat gain, then the envelope complies. See Section **Error! Reference source not found.** for a more complete discussion of the overall envelope approach.~~

3.1.3 Performance Approach

(§141)

The performance approach may be used for compliance or may include lighting and mechanical system compliance when these systems are permitted at the same time. When the performance approach is used for the envelope only, the computer model deals with the energy efficiency of the entire envelope under both heating and cooling conditions. This means that trade-offs can be made among all envelope components. The computer analysis is much more sophisticated and can account for more subtle energy effects due to surface orientation and hourly changes in the outside temperature. If the envelope is combined with other parts of the building for energy compliance, then more trade-offs can be made, such as increasing envelope efficiency in order to allow more lighting power or a less efficient mechanical system. See Section ????. for a more complete discussion of the performance approach.

3.1.4 What's New in the ~~for~~ 2008 Standards

With the 2008 update to the Standards, there were several important changes to the building envelope requirements, as described below:

A. A new section [§143(c)] ~~adds a~~reduces the ~~-~~prescriptive area requirement for skylights in large enclosed spaces in low-rise nonresidential buildings from 25,000 square feet down to 8,000 square feet.

B. A new prescriptive requirement for steep-slope roofing ~~applications~~products (cool roof) ~~Roof is now in the prescriptive requirement for steep-slope roof applications~~.

C. *Overall Building Envelope Method*. The overall building envelope method has been revised to combine heating and cooling and to provide simplified trade-offs for roofing alterations.

D. *Site-Built Fenestration*. Changes to site-built fenestration requirements including the new NFRC Component Modeling~~ethod~~ Approach (CMA) certification and changes to CEC default values in Section 116 and Reference Nonresidential Appendix NA6 and NA7.4.

E. *Insulation Levels*. Revised prescriptive roof, wall, and floor insulation requirements levels in certain climate zones~~,~~.

Acceptance Requirements. The 2008 Standards introduces Acceptance Requirements for site-built fenestration products.

3.2 Fenestration

Windows, glazed doors, and skylights have a large impact on envelope related heating and cooling loads in nonresidential and high-rise residential buildings. The size, orientation, and types of fenestration products can dramatically affect overall energy performance. Fenestration, orientation, and shading play a major role in the building's energy use and can affect the operation of the HVAC system and the comfort of the occupants.

3.2.1 Mandatory Measures

The mandatory measures for doors, windows, and skylights address the air-tightness of the units and how their U-factor and SHGC are determined. Fenestration products must be labeled with a U-factor and SHGC, and the manufacturer or an independent certifying organization must certify that the product meets the air infiltration requirements of §116(a).

Certification and Labeling

§10-111 and §116
Reference Nonresidential Appendices NA6

The Administrative Regulations §10-111 and the Standards §116 require that fenestration products have labels that list the U-factor, the solar heat gain coefficient (SHGC), and the methods used to determine those values. The label must also certify that the fenestration product meets the requirements for air leakage. The air leakage requirements are specified in §116 and limit the infiltration rate to 0.3 cfm/ft² for most products.

Manufactured (Factory-Assembled) Fenestration Label Certificates

Each manufactured (factory-assembled) fenestration product must have a clearly visible temporary label attached to it, which is not to be removed before inspection by the enforcement agency. For rating and labeling manufactured fenestration products, the manufacturer has two choices for U-factor and SHGC:

1. The manufacturer can choose to have the fenestration product rated and labeled in accordance with the NFRC Rating Procedure (NFRC 100 for U-factors and NFRC 200 for SHGC). If the manufactured fenestration product is rated using the NFRC Rating Procedure, it must also be permanently labeled in accordance with NFRC procedures.
2. The manufacturer can choose to use CEC Default values for U-factors and SHGC. If default values are used, the manufacturer must attach a temporary label meeting specific requirements (permanent labels are not required). Product meets the air infiltration requirements of §116(a)1, U-factor criteria of §116(a)2, and SHGC criteria of §116(a)3, in the 2008 *California Energy Efficiency Standards for Residential and Nonresidential Buildings*.

Figure 3-2 shows a sample default temporary label. Where possible, it is best to select fenestration that is NFRC rated, and do so before completing compliance documents. This enables the use of NFRC-certified data to be used for compliance purposes.

Default Temporary Label

Although there is no exact format for the Default temporary label, it must be clearly visible and large enough for the enforcement agency field inspectors to easily read, and it must include all information required by the regulations. The suggested label size is 4 in. x 4 in. The label must have the words “CEC Default U-factor” followed by the correct value for that fenestration product from Table

116-A in the Standards and the words "CEC Default SHGC" followed by the correct value from Standards Table 116-B. The U-factor and SHGC Default values should be large enough to be visible from 4 ft. For skylights, the label must indicate when the product was rated with a built-in curb.

If the product claims the default U-factor for a thermal-break product, the manufacturer must certify that the thermal-break criteria, upon which the default value is based and are met. This can be done by placing the term "Meets Thermal-Break Default Criteria" on the temporary label.

CEC Default Label	**XYZ Manufacturing Co.**
Key Features:	Double-pane Operable Metal, Thermal Break Air space 7/16 in. or greater Tinted
CEC Default U-factor 0.61	CEC Default SHGC 0.53

Product meets the air infiltration requirements of §116(a)1, U-factor criteria of §116(a)2, and SHGC criteria of §116(a)3, 2008 California Energy Efficiency Standards for Residential and Nonresidential Buildings.

Figure 3-2 – Sample Default Temporary Label

Site-Built Label Certificates

Site-built fenestration is fenestration designed to be field-glazed or field-assembled using specific factory cut or otherwise factory formed framing and glazing units that are manufactured with the intention of being assembled at the construction site; Site- built fenestration must either have an NFRC label certificate or use default values. Site-built fenestration may be pre-assembled off-site by the glazing contractor. The glazing contractor may pre-assemble the site-built fenestration. Examples of site-built fenestration include storefront systems, curtain walls, and atrium roof systems. Site-built fenestration in large projects (more than or equal to 10,000 ft² of site-built fenestration area, which includes windows, non-opaque doors, and skylights) must have either a label certificate issued by NFRC that is filed in the contractor's project office during construction and in the building manager's office after construction, or a label certificate issued by the glazing fabricator using CEC Default U-factor and SHGC. For further discussion of the NFRC's new Component Modeling Approach, see below.

For site-built fenestration products, the label certificate will likely be generated by the glazing contractor after the construction project is awarded. For compliance purposes, the designer should select a U-factor and SHGC for the fenestration system that is reasonable and achievable. For site-built fenestration that will be NFRC certified, the certified data should be modeled for compliance purposes. If the fenestration is not NFRC certified the designer should model the appropriate default U-factor and SHGC for the glass and frame type selected from Table 116-A and Table 116-B or the alternative equations for U-factor and SHGC in Reference Nonresidential Appendix NA6; note that the

Reference Nonresidential Appendix NA6 equation for default U-factors and SHGC can only be used in buildings with less than 10,000 square feet of site-built fenestration. Use CEC's Fenestration Certificate FC-2 to document the values for less than 10,000 square feet.

For site-built fenestration of 10,000 square feet and greater, which includes windows, non-opaque doors, and skylights, use NFRC certified products with NFRC Label Certificates or for non NFRC certified products use CEC default values from Table 116-A for U-factors or Table 116-B for SHGC and use Fenestration Certificate FC-1 to document the values.

For site-built fenestration products, a Label Certificate can take the place of the temporary label and the permanent label. For site-built fenestration products that are not rated through the NFRC 100 or 200 procedures, a Default Label Certificate can be provided by the person (e.g., architect, responsible party, glazing contractor, extrusion manufacturer, IG fabricator or glass manufacturer) taking responsibility for fenestration compliance using CEC's Default Fenestration Label Certificates either FC-1 or FC-2 approved by the Commission.

Figure 3-3 is a sample CEC Default Label Certificate, FC-1, when using default values from Standards Table 116-A and Table 116-B, and Figure 3 is a sample of the CEC Alternate Default Label Certificate, FC-2, when using default U-factors and calculated SHGC from Reference Nonresidential Appendices NA6 for buildings with less than 10,000 ft^2 of site-built fenestration. A separate Default Label Certificate should be completed for each product line that results in a different U-factor and SHGC. The Default Label Certificate should state the total amount of this product line throughout the project, the locations in the project where the product line is installed, and the pages in the drawings and fenestration schedule that show this product line. The Default Label Certificate should clearly identify the appropriate table or equation that is used to determine the default U-factor and SHGC and, if applicable, the center of glass $SHGC_c$ used in calculating the $SHGC_{fen}$. Manufacturer's documentation of these product characteristics must also be attached to the plans.

If the product claims the default U-factor for a thermal-break product, the Default Label Certificate should also contain the words "Meets Thermal-Break Default Criteria". The Default Label Certificate should also identify any special features that raise or lower the default U-factor as specified by the Default U-factor table. For skylights, the Default Label Certificate must indicate the same information about whether the skylight is rated with a curb as described for the Default Temporary Label above.

The Default Label Certificate may also include the visible (light) transmittance (VT) factor to determine whether daylit area credit may be taken in conjunction with daylighting controls. The person taking responsibility for fenestration compliance can choose to attach Default Temporary Labels to each fenestration product as described in the previous paragraph instead of providing Default Label Certificates for each product line.

Scope of the New Component Modeling Approach (CMA) Product Certification Program

The National Fenestration Rating Council ("NFRC") has developed a new commercial certification program that rates whole fenestration products to include site-built fenestration in accordance with NFRC 100 and NFRC 200. This new approach determines the U-factor, Solar Heat Gain Coefficient (SHGC) and Visible Transmittance (VT) of a product faster and accurate without actual physical laboratory testing in most cases. Such results can be used in a pre-bid report or for other energy performance analysis.

Each component that makes up a fenestration product shall have values that are NFRC-approved and maintained in an NFRC Approved Component Library Database.

In order to accomplish this new approach, NFRC has separated the fenestration products into three separate library databases. These components are:

A. Glazing

B. Spacer

C. Frame Cross -section

The component manufacturers shall have their products approved by NFRC in accordance with mandatory new NFRC 705-2008 Product Certification Program. Before the components can be accepted into the Component Library Database it must be first verified by an Independent Certification and Inspection Agency (IA) which has been licensed by NFRC.

To comply with NFRC's new CMA approach; 1) the new NFRC certified software tool will be used to calculate NFRC non-certified product ratings from the Component Library Database. The CMA software will be made available to the public through www.NFRC.org to calculate the energy product thermal performance. The resulting report can be used in pre-design energy analysis and can also be used as a pre-bid report; 2) The CMA software tool is designed to put together the chosen components as a whole fenestration product and simulate the thermal performance of the whole product. The software tool prints out a report in which provides the thermal performance of the product. The report can be used in a pre-bid report or for other energy performance analysis. However, the report is not an NFRC approved label certificate. To acquire an NFRC approved label certificate, products must first meet NFRC's CMA Product Certification Program (CMA-PCP, NFRC 705-2008) requirements and signing the applicable NFRC license agreement. Further details will be available at www.NFRC.org.

Note: Ensure that all Certified Label Certificates are registered with project site records for later energy Acceptance verification according to NA7.Field-Fabricated Fenestration

Field-fabricated fenestration is not the same as site-built fenestration. Field-fabricated fenestration is a very limited category of fenestration that is made at the construction site out of materials that were not previously formed or cut with

the intention of being used to fabricate a fenestration product. No labeling is required for field-fabricated fenestration products. Field-fabricated fenestration and field-fabricated exterior doors may be installed only if the compliance documentation has demonstrated compliance using U-factors from Standards Table 116-A and SHGC values from Standards Table 116-B. The field inspector is responsible for ensuring field-fabricated fenestration meets the specific criteria described in Tables 116-A and 116-B for the U-factor and SHGC used for compliance. Thermal break values do not apply to field-fabricated fenestration products.

Example 3-1

Question

A 150,000 ft² "big box" retail store has 2,000 ft² of site-built vertical fenestration located at the entrance. An operable aluminum storefront framing system is used, without a thermal break. What are the acceptable methods for determining the fenestration U-factor and SHGC? What are the labeling requirements assuming a center of glass U-factor and SHGC of 0.50 and 0.70?

Answer

One of the following three methods may be used:

The site-built fenestration can be rated using NFRC-100 procedures for U-factors and NFRC-200 procedures for SHGC.

The second option for determining U-factor and SHGC may be to select from Default Standards Table 116-A and 116-B. From these tables, the U-factor is 0.79 and the SHGC is 0.73.

There is a third option for site-built fenestration that is less than 10,000 ft² in a building. In this case, site-built fenestration does not have to be rated through the NFRC 100 and NFRC-200 procedures and may use the default U-factor and SHGC values from equations in Reference Nonresidential Appendix NA6 as described in the following bullets:

The Alternate U-factor may be calculated from the Reference Nonresidential Appendix NA6, Equation NA6-1, $U_T = C_1 + C_2 \times U_C$. From Table NA-1 for metal frame site-built fenestration, $C_1 = 0.311$ and $C_2 = 0.872$, therefore the overall U-factor is calculated to be 0.75.

Likewise, the SHGC is determined from the Reference Nonresidential Appendix, NA6, Equation NA6-2, $SHGC_T = 0.08 + 0.86 \times SHGC_C$. Therefore, the SHGC is calculated to be 0.68.

An Alternative Default Label Certificate, FC-2, should be completed for each fenestration product line unless the responsible party chooses to attach Default Temporary Labels to each fenestration product throughout the building.

Example 3-2

Question

What constitutes a "double-pane" window?

Answer

Double-pane (or dual-pane) glazing is made of two panes of glass (or other glazing material) separated by a space (generally 1/4" [6 mm] to 3/4" [18 mm]) filled with air or other gas. Two panes of glazing laminated together do not constitute double-pane glazing.

CEC DEFAULT U-FACTOR AND SHGC LABEL CERTIFICATE FC-1

PROJECT INFORMATION Page 1 of ____

PROJECT NAME:	DATE:
PROJECT ADDRESS:	

FC-1 shall be used for buildings with 10,000 ft^2 or more of site-built vertical fenestration area or for unlabeled skylight in conjunction with Default Tables 116-A and 116-B.

A separate FC-1 Label Certificate Form is required for each different fenestration product line. Unlabeled manufactured fenestration products including skylights and exterior doors shall meet the air infiltration requirements of Section 116(a)1 of the 2008 California Energy Efficiency Standards applicable to Residential and Nonresidential Buildings.

Enter the U-factor$_t$ and SHGC$_t$ in the following boxes after completing Steps 1 and 2 below.

U-factor$_t$ = ____	SHGC$_t$ = ____

PRODUCT LINE INFORMATION (Complete a separate Default Label Certificate for each fenestration product)

Total Number of units for each product:		Total square footage of this product line:	
Schedule location on the building plans – reference page:		Total Fenestration Area (ft^2) on project:	
Location(s) on building: S, N, E, W (Enter appropriate orientation(s):			

STEP 1: U-FACTOR INFORMATION FROM DEFAULT TABLE 116-A:

Frame Type:	❑ Metal	❑ Metal With Thermal Break	❑ Structural Glazing		❑ Nonmetal	
Product Type:	❑ Operable	❑ Fixed	❑ Greenhouse/ Garden Window	❑ Doors	❑ Skylights	
Glazing Type:	❑ Single Pane	❑ Double Pane	❑ Glass Block	❑ Tubular Device	❑ Other	Insert value in the default U-factor$_t$ gray box above

STEP 2: SOLAR HEAT GAIN INFORMATION FROM DEFAULT TABLE 116-B:

Product Type	❑ Operable	❑ Fixed	
Glazing:	❑ Clear	❑ Tinted	Insert value in the default SHGC$_t$ gray box above

STEP 3: ATTACHED MANUFACTURER'S LITERATURE:

Manufacturer's literature must be attached showing the Product Type, Frame Type, Glazing, COG U-factor, and SHGC$_c$ information needed to determine the Default U-factor$_t$ and SHGC$_t$.

PARTY TAKING RESPONSIBILITY FOR FENESTRATION COMPLIANCE (CONTACT PERSON):

CONTACT PERSON:	
COMPANY NAME AND ADDRESS:	
PHONE:	FAX:
SIGNATURE:	LICENSE # (if Applicable)

Figure 3-3 – CEC Default U-Factor and SHGC Label Certificate

CEC ALTERNATIVE DEFAULT U-FACTOR AND SHGC LABEL CERTIFICATE FC-2

PROJECT INFORMATION **Page 1 of** ____

PROJECT NAME:	DATE:
PROJECT ADDRESS:	

FC-2 shall be used for buildings with less than 10,000 ft^2 of site-built vertical fenestration or for unlabeled skylights in conjunction with Equations NA6-1 and NA6-2 found in the Nonresidential Appendices NA6.
A separate FC-2 Label Certificate Form is required for each different fenestration product line. Unlabeled manufactured fenestration products including skylights and exterior doors shall meet the air infiltration requirements of Section 116(a)1 of the 2008 California Energy Efficiency Standards applicable to Residential and Nonresidential Buildings.

Enter the U-$factor_t$ and $SHGC_t$ in the following boxes after completing Steps 1 and 2 below.

U-$factor_t$ = _____	$SHGC_t$ = _____

DUCT INFORMATION (Complete a separate Default Label Certificate for each fenestration product)

Total Number of units for each product:		Total square footage of this product line:	
Schedule location on the building plans – reference page:		Total Fenestration Area (ft2) on project:	
Location(s) on building: S, N, E, W (Enter appropriate orientation(s)			

GLAZING INFORMATION

Product Type Systems	❑ Vertical Fenestration	Skylights (select one) ❑ Skylight with Curb	❑ Skylight without Curb
Frame Type	❑ Without Thermal Break	❑ With Thermal Break	❑ Structural Glazing
Glazing Type	❑ Single	❑ Double	❑ Other

STEP 1: Determine U-Factor:

Enter U-factor from Equation NA6-1 and inserted above in the gray box next to U-factor.

STEP 2: Determine $SHGC_t$:

Enter the Center of Glass, SHGCc, in the equation below to determine the solar heat gain coefficient with frame, $SHGC_t$.

Enter Center of Glass, COG, from Manufacturer's Documentation, SHGCc			☐ Insert Center of Glass value here
Calculate the new $SHGC_t$ of the frame.	$SHGC_t$ = 0.08 + (0.86 x SHGCc) =		☐ Insert calculated result value here and in above gray box next to $SHGC_t$

ATTACHED MANUFACTURER'S LITERATURE
Manufacturer's literature must be attached showing the Product Type, Frame Type, Glazing Type, and, center of glass for U-factor and SHGC.

RESPONSIBILITY PARTY INFORMATION:

CONTACT PERSON:

COMPANY NAME and ADDRESS:

PHONE: FAX:

SIGNATURE: LICENSE# (if Applicable)

Figure 3-4 – CEC Alternate Default U-Factor and SHGC Label Certificate

ALTERNATIVE DEFAULT U-FACTOR AND SHGC LABEL CERTIFICATE			FC-2

caulked, gasketed, weather-stripped or otherwise sealed. Unframed glass doors and fire doors are the two exceptions to these air leakage requirements.

Table 3-1 – Maximum Air Infiltration Rates

Class	Type	Rate
Windows (cfm/ft²) of window area	All	0.3
Residential Doors (cfm/ft²) of door area	Swinging, Sliding	0.3
All Other Doors (cfm/ft²) of door area	Sliding, Swinging (single door)	0.3
	Swinging (double door)	1.0

3.2.2 Window Prescriptive Requirements

There are three aspects of the envelope component approach for windows:

1. Maximum area (total plus west facing).
2. Maximum U-factor.
3. Maximum relative solar heat gain.

Window Area

§143(a)5.A.

Under the envelope component approach, the total window area may not exceed 40% of the gross wall area (encompassing conditioned space) for the building. Likewise, the west facing window area may not exceed 40% of the west gross wall area (encompassing conditioned space for the building). This maximum area requirement will affect those buildings with very large glass areas, such as high-rise offices, automobile showrooms or airport terminals.

Optionally, the maximum area may be determined by multiplying the length of the display perimeter (see definition below in this section) by 6 ft in height and use the larger of the product of that multiplication or 40% of gross wall area.

Glazing in a demising wall does not count toward the total building allowance. There is no limit to the amount of glazing allowed in demising walls, but it must meet the U-factor and relative solar heat gain (RSHG) requirements for the climate zone.

As a practical matter, window area is generally taken from the rough opening dimensions. To the extent this opening is slightly larger than the frame, the rough opening area will be a bit larger than the formally defined window area.

For glass doors, also use the rough opening area, except where the door glass area is less than 50% of the door, in which case the glazing area may be either the entire door area, or the glass area plus two inches added to all four sides of the glass (to represent the “window frame”) for a window in a door. Calculate the window area from the rough opening dimensions and divide by the gross exterior wall area, which does not include demising walls. Glazing area in demising walls has no limit and any glazing in demising walls is not counted as part of the exterior wall/window ratio.

Display perimeter is the length of an exterior wall in a Group B; Group F, Division 1; or Group M occupancy that immediately abuts a public sidewalk, measured at the sidewalk level for each story that abuts a public sidewalk. This generally refers to retail display windows, although other occupancies such as offices can also have a display perimeter. Public sidewalks are accessible to the public at large (no obstructions, limits to access, or intervening non-public spaces). The display perimeter is used for a special calculation of window area (§143(a)5A). Demising walls are not counted as part of the display perimeter.

In general, any orientation within 45° of true north, east, south or west will be assigned to that orientation. The orientation can be determined from an accurate site plan. Figure 3-3 indicates how surface orientations are determined and what to do if the surface is oriented exactly at 45° of a cardinal orientation. For example, an east-facing surface cannot face exactly northeast, but it can face exactly southeast. If the surface were facing exactly northeast, it would be considered north facing.

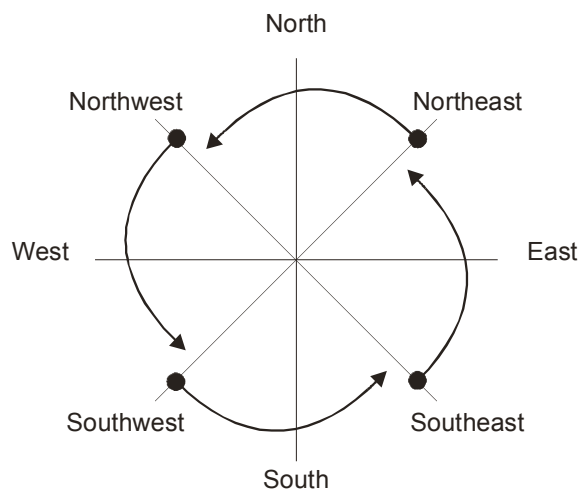

Figure 3-3 – Four Surface Orientations

Window U-factor

§143(a)5B.

Each window must meet the required U-factor criteria (see **Error! Reference source not found.**). For nonresidential buildings, the U-factor criterion is 0.47 Btu/h-ºF-ft² for the valley, desert and cold climates. The criterion is 0.77 Btu/h-ºF-ft² for the middle coast and south coast climates. For residential buildings, Component Package D, the criterion is 0.40 for all climates.

In general, an NFRC-rated double-glazed, low-e window with a thermal break frame will comply with the 0.47 criterion, and an NFRC rated double glazed, low-e window with a standard frame will comply with the 0.77 criterion; however, other window constructions may comply. See www.NFRC.org, Certified Product Directory database or use the Alternative Default Fenestration calculation, Reference Nonresidential Appendix NA6.

Table 3-2 – Window Requirements

		Climate Zones									
Space Type	Criterion	1,16		3-5		6-9		2,10-13		14, 15	
Nonresidential	U-factor	0.47		0.77		0.77		0.47		0.47	
	Relative Solar Heat Gain	Non-North	North	Non-North	North	Non-North	North	Non-North	North	Non-North	North
	0-10% WWR	0.49	0.72	0.61	0.61	0.61	0.61	0.47	0.61	0.46	0.61
	11-20% WWR	0.43	0.49	0.55	0.61	0.61	0.61	0.36	0.51	0.36	0.51
	21-30% WWR	0.43	0.47	0.41	0.61	0.39	0.61	0.36	0.47	0.36	0.47
	31-40% WWR	0.43	0.47	0.41	0.61	0.34	0.61	0.31	0.47	0.31	0.40
Residential High-rise	U-factor	0.47		0.47		0.47		0.47		0.47	
	Relative Solar Heat Gain	Non-North	North	Non-North	North	Non-North	North	Non-North	North	Non-North	North
	0-10% WWR	0.46	0.68	0.41	0.61	0.47	0.61	0.36	0.49	0.36	0.47
	11-20% WWR	0.46	0.68	0.40	0.61	0.40	0.61	0.36	0.49	0.31	0.43
	21-30% WWR	0.36	0.47	0.31	0.61	0.36	0.61	0.31	0.40	0.26	0.43
	31-40% WWR	0.30	0.47	0.26	0.55	0.31	0.61	0.26	0.40	0.26	0.31

Summary from Standards Tables 143-A and 143-B

Window Relative Solar Heat Gain

§143(a)5C .

Each window or skylight must meet the required relative solar heat gain (RSHG) (see **Error! Reference source not found.**).

The required value for relative solar heat gain is less stringent (higher) for north-facing windows. Either an RSHG of 0.56 or the "north" value, whichever is greater, may also be used for windows in the first floor display perimeter that are prevented from having an overhang because of building code restrictions (such as minimum separation from another building or a property line) (exception to §143(a)5C). The relative solar heat gain criteria also depend on the window-wall ratio, becoming more stringent with larger window areas.

Note also that the RSHG limitation allows credit for window overhangs. In order to get credit for an overhang, it must extend beyond both sides of the window jamb by a distance equal to the overhang projection (§143(a)5Cii). This would occur naturally with a continuous eave overhang but may require special attention in some designs. See Section 3.2.6 for more information on RSHG.

3.2.3 Skylight Prescriptive Envelope Requirements

As with windows, there are three aspects of the envelope component approach for skylights:

1. Maximum area
2. Maximum U-factor
3. Maximum solar heat gain coefficient

Table 3-3 – Skylight Requirements

			Climate Zones				
			1,16	3-5	6-9	2,10-13	14, 15
Nonresidential	U-factor	Glass w/Curb	1.11	1.11	1.11	1.11	1.11
		Glass wo/Curb	0.68	0.82	0.82	0.68	0.68
		Plastic	1.04	1.11	1.11	1.11	1.11
	SHGC Glass	0-2% SRR	N/R	0..57	0.57	0.46	0.46
		2.1-5% SRR	0.N/R	0.40	0.40	0.36	0.36
	SHGC Plastic	0-2% SRR	0.69	0.69	0.69	0.69	0.69
		2.1-5% SRR	0.57	0.57	0.57	0.57	0.57
Residential High-rise	U-factor	Glass w/Curb	1.11	1.11	1.11	1.11	1.11
		Glass wo/Curb	0.68	0.82	0.82	0.68	0.68
		Plastic	1.11	1.11	1.11	1.11	1.11
	SHGC Glass	0-2% SRR	0.46	0.57	0.57	0.46	0.46
		2.1-5% SRR	0.36	0.32	0.40	0.32	0.31
	SHGC Plastic	0-2% SRR	0.69,0.57	0.57	0.57	0.57	0.57
		2.1-5% SRR	0.55	0.39	0.57	0.34	0.27

Summary from Standards Tables 143-A and 143-B, Skylight Roof Ratio, SRR.

Skylight Area

§143(a)6A.

The area limit for skylights is 5% of the gross exterior roof area or skylight roof ratio (SRR). This effectively prevents large skylights under the envelope component approach. The limit increases to 10% for buildings with an atrium over 55 ft high (see Reference Joint Appendix I definition). The 55-ft height is also the height limitation at which the Uniform Building Code requires a mechanical smoke-control system for such atriums (CBC Sec. 1715). This means that the 10% skylight allowance is not allowed for atriums unless they also meet this smoke control requirement. All skylights must meet the maximum U-factor criteria.

There are two ways that skylights can be mounted into a roof system, either flush-mounted or curb-mounted. In order to create a positive water flow around them, skylights are often mounted on "curbs" set above the roof plane. These curbs, rising 6 to 12 inches (15 to 30 centimeters) above the roof, create additional heat loss surfaces, right where the warmest air of the building tends to collect.

Skylight area of unit skylights is the area of the rough opening of a skylight. The rough framed opening is used in the NFRC U-factor ratings (NFRC U-factor ratings for manufactured skylights with integrated curbs include glazing, framing, and the curb) procedure; it is also the basis of the default U-factors in Reference Nonresidential Appendix NA6. For skylights, the U-factor represents the heat loss per unit of rough framed opening (the denominator). However, the heat loss (the numerator) includes losses through the glazing, the frame, and the part of the curb that is integral with the skylight and included in the skylight test. Portions of roof that serve as curbs that -mounts the skylight above the level of the roof (see Figure 3-4 are part of the opaque building envelope.

Site-built monumental or architectural skylights – that are equipped with integral built-in or site built curbs (not part of the roof construction) - are often used for atrium roofs, malls, and other applications that need large skylights and are treated differently. In such cases the skylight area is the surface area of the glazing and frame/curb (not the area of the rough framed opening), regardless of the geometry of the skylight (i.e., could be flat pyramid, bubble, barrel vault, or other three-dimensional shape). For special cases such as clerestory, rooftop monitor or tubular skylights, see Chapter 5 Section 5.2.1.4, Daylighting Controls.

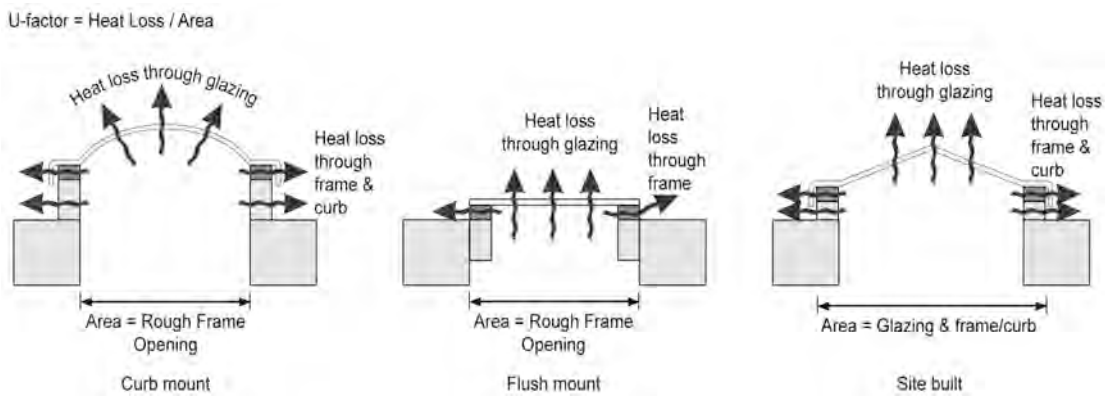

Figure 3-4 – Skylight Area

Skylight U-factor

§143(a)6B

For skylights, the U-factor and solar heat gain coefficient (SHGC) criteria is different depending on whether the skylight glazing material is plastic or glass. For glass skylights, the U-factor criteria depend on whether or not the skylight is intended to be mounted on a curb. It is assumed that all plastic skylights are mounted on a curb. See Standards Tables 143-A, 143-B, and 143-C for U-factor requirements. As discussed above, the U-factor for skylights includes heat losses through the glazing, the frame and the integral curb (when one exists). In many cases an NFRC rating does not exist for projecting plastic skylights. In this case, the designer can make use of the default fenestration U-factors in Standards Table 116-A.

If a glass skylight is installed and it is not possible to determine whether the skylight was rated with a curb, compliance shall be determined by assuming that the skylight must meet the requirements for skylights with a curb. All plastic skylights types are assume to meet the requirements for plastic skylights with a curb.

Skylight SHGC

§143(a)6C

Skylights are regulated only for SHGC, not RSHG, because skylights cannot have overhangs. The SHGC criteria vary with the skylight to roof ratio (SRR). Two ranges are represented in the Standards: up to and including 2% of the

exterior roof, and greater than 2% but less than or equal to 5%. See Standards Tables 143-A, 143-B, and 143-C for SHGC requirements. The designer can make use of default solar heat gain coefficients in Standards Table 116-B or use the Nonresidential Reference Appendix NA6 if less than 10,000 sf.

3.2.4 Daylighting Prescriptive Requirements for Skylights in Large Enclosed Spaces

§143(c)

Appropriately sized skylight systems when combined with daylighting controls can dramatically reduce the energy consumption of a building. Daylighting control requirements under skylights are discussed in Chapter 5, Indoor Lighting, of this Manual. With too little skylight area, insufficient light is available to turn off electric lighting; with too much skylight area, solar gains and heat losses through skylights negate the lighting savings with heating and cooling loads.

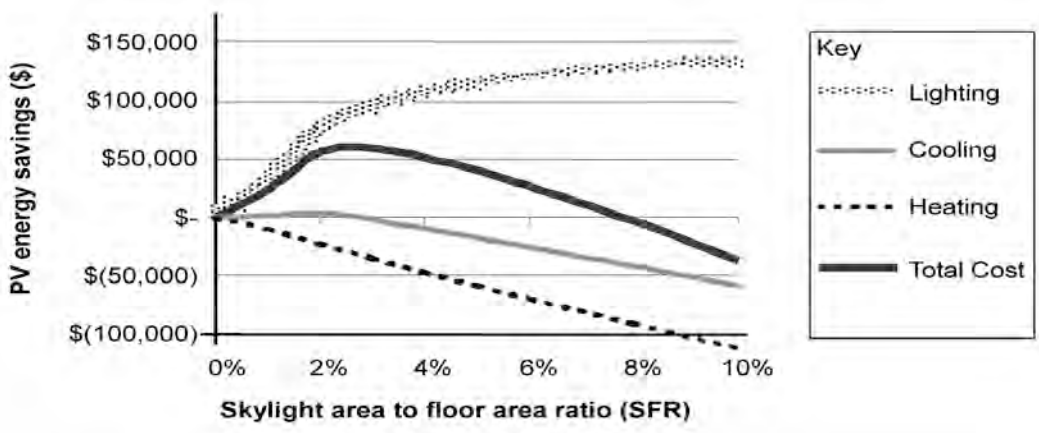

Figure 3-5 – Present Value Savings of Skylight
50,000 ft² Warehouse in Sacramento

Skylights and automatic daylighting controls are most cost-effective in large open spaces and are prescriptively required in enclosed spaces (rooms) that are larger than 8,000 ft^2, directly under a roof and have ceiling heights greater than 15 ft., and have lighting power densities greater than 0.5 W/ft². *The demanding lighting control needs in auditoriums, churches), museums and movie theaters, and the need to minimize heat gains through the roofs of refrigerated warehouses, render these few occupancies exempt from the skylight requirement. Gymnasiums do not qualify for this exemption unless there is a stage or there is a determination that this space will be used to hold theatrical events.*

Since skylights with controls reduce electric lighting, they are prescriptively required on all nonresidential occupancies that meet the above criteria, whether the space is conditioned or unconditioned. Single-glazed skylights are sufficient for unconditioned buildings such as unconditioned warehouses. Skylights over conditioned spaces must meet the U-factor and SHGC requirements in §143(a).

3.2 Minimum Skylight Area for Large Enclosed Spaces

§143(c)

Minimum Skylight Area for Large Enclosed Spaces with Three or Fewer Stories applies to low-rise conditioned or unconditioned enclosed spaces that meet the following conditions:

1. In climate zones 2 through 15
2. A room that is greater than 8,000 ft^2
3. Directly under a roof
4. Ceiling heights greater than 15 feet
5. A lighting power density for general lighting equal to or greater than 0.5 w/ft^2

A. Daylit Area§143(c)1

At least one half of the floor area shall be in the skylit area under skylights and the skylit are shall be shown on the building plans

Skylit area is defined in §131(c)1D.

B. Minimum skylight Area or Effective Aperture

§143(c)2

Areas that are skylit shall have a minimum skylight area to skylit area ration of at least 3.3% or minimum skylight effective aperture of at least 1.1%. Skylight effective aperture shall be determined as specified in Equation 146-C

(Insert Equation 146-C here)

Though §143(c)1 requires that at least half of the floor space be daylit and that the ratio of skylight area to skylit area be 3.3%, there are maximum skylight area requirements whenever the skylights are above conditioned spaces. Section 143(a)6 limits skylight area to 5% of the gross roof area in most cases and to 10% of the roof area for atria over 55 feet.

C. Skylight Characteristics.

§143(c)3

Skylights installed to comply with the minimum skylight area for large enclosed spaces shall:

1. Have a glazing material or diffuser that has a measured haze value greater than 90%, tested according to ASTM D1003 (notwithstanding its scope) or other test method approved by the Commission
2. If the space is conditioned, meet the requirements in 143(a)6 or 143(b). In general these requirements require the use of double glazed skylights. When the skylights are above unconditioned spaces there is no limitation placed on skylight area or its U-factor or SHGC.

   If the space is unconditioned, single glazed skylights will comply with the code requirements as long as they are sufficiently diffusing [i.e. the glazing or diffuser material has a haze rating greater 90%. Products that have such a rating include prismatic diffusers, laminated glass with diffusing interlayers, pigmented plastics etc. The purpose of this requirement is to assure the light is diffused over all sun angles.

   Other methods of diffusion that result in sufficient diffusion of light over the course of the entire year would also be acceptable in lieu of using diffusing glazing. Acceptable alternatives are baffles or reflecting surfaces that ensure over all sun angles encountered during the course of a year that direct beam light is reflected off of a diffuse surface prior to entering the space. This alternative method of diffusion would have to be documented by the designer and approved by the code authority in your jurisdiction.

D. Controls

§143(c)4

Electric lighting in the daylit area shall meet the mandatory control requirements in §131(c)2. These control requirements include controlling at least 50% of the general lighting in the skylit daylight areas separately from other lighting in the enclosed space, controlling luminaires in primary sidelit areas separately from skylit areas, in addition to other lighting control requirements. See Section 5.2.1.3 for more information about lighting control requirements, and Section 5.2.1.4 for more information about daylighting control requirements.

E. Exceptions

The following spaces are not required to have a minimum skylight area:

1. Auditoriums, churches, movie theaters, museums, and refrigerated warehouses
2. In buildings with unfinished interiors, future enclosed spaces where it is planned to have ≤ 8,000 ft^2 of floor area, or ceiling heights less than or equal to 15 feet, based on proposed future interior wall and ceiling locations as delineated in the plans. This exception shall not apply to these future enclosed spaces when interior walls and ceilings are installed for the first time, the enclosed space floor area is > 8,000 ft^2, and the ceiling height > 15 feet (See 149(b)1M). This exception shall not be used for S-1 or S-2 (storage), or for F-1 or F-2 (factory) occupancies
3. Enclosed spaces having a designed general lighting system with a lighting power density < 0.5 W/ft2.

When skylights are prescriptively required by §143(c), at least one half of the floor area in the enclosed space must be in the "daylit area". New in 2008 Title 24, tradeoffs are allowed between skylights and windows as long as the minimum daylit area threshold (50% of eligible enclosed space area) is met. There are specific definitions and geometries for daylit areas under skylights and those near windows. It is allowed to have a combination of windows and skylights as long as there is no double-counting of the overlapping daylit areas when meeting the 50% space area threshold. Definitions of the daylit area under skylights and near windows are explained in Section 5.2.1.4 of this manual.

Designing with Skylights to Meet §143(c) Requirements

The skylight area must be a minimum fraction of the daylit area or minimum skylight aperture, and the skylights must be diffusing (haze rating greater than 90%). The purpose of this haze requirement for skylight glazing is to assure the light is diffused over all sun angles. Other methods of diffusion that result in sufficient diffusion of light over the course of the entire year would also be acceptable in lieu of using diffusing glazing. Acceptable alternatives are baffles or reflecting surfaces that ensure that direct beam light is reflected off a diffuse (matte) surface prior to entering the space for all sun angles encountered during the course of a year. This alternative method of diffusion would have to be documented by the designer and approved by the code authority in your jurisdiction. Spaces with skylights are required to have automatic daylighting controls as specified in §131(c)2.

To determine the number and spacing of skylights that are required to meet the "daylit area under skylights" requirements, the effect of the skylight spacing, size of skylights, and interaction with other building components must be determined. These parameters are described in "daylit area under skylights" as defined in §131(c) of the Mandatory Requirements for Lighting Systems. Refer to Section

5.2.1.4 as it describes the daylit area and the mandatory electric lighting controls for the daylit area.

In **Error! Reference source not found.**, the 8 ft x 4 ft skylight over a 20 ft ceiling will have a 36 ft x 32 ft daylit area.

As ceiling heights increase, the daylit area under a skylight increases. To maintain the minimum skylight area to daylit floor area ratio, one must either increase the skylight size or increase overlap between daylit areas (space skylights closer together).

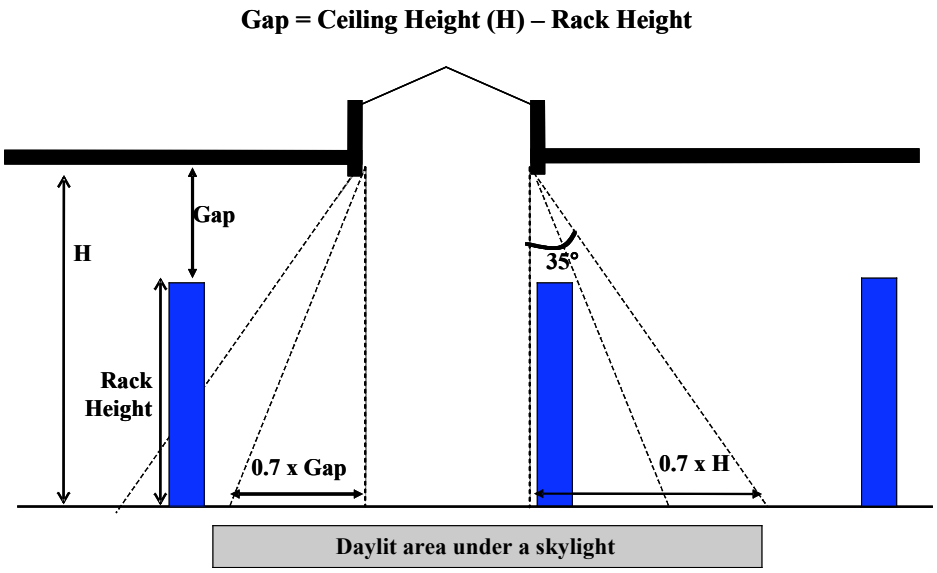

Figure 3-6 – Daylit Area under Skylights

For good uniformity of illumination the daylit areas under skylights should overlap. In the case of multiple skylights in a space, the skylight area to daylight area ratio will be the total skylight area (number of skylights times the area per skylight) to the total daylit area under skylights (often the area of the entire space).

While §143(a)6A of the standards caps the skylit area to 5% of the gross exterior roof area, §143(c)2 also requires that the total skylight area be a minimum of 3.3% of the daylit area under skylights (explained in Section 5.2.1.4 of this manual). §143(c)2 also requires that the skylights have an effective aperture of at least 1.1%.

The skylight effective aperture (as defined in Standards Equation 146 C in §146(a)2.E.iii) is a measure of the skylight system's transmittance including light loss due to dirt, transmittance of glazing, transmittance of louvers, diffuser or other light controlling elements, and transmittance of the light well (well efficiency). See Chapter 5 of this manual for more information on how to calculate effective aperture for skylights.

It should be noted that the skylight requirements in the Standards specify the minimum amount of skylight area needed to meet code; you can install more

skylight area. In some cases, additional energy savings from lighting can be realized by increasing the skylight area. However, too much skylight area will result in increased mechanical loads that may outweigh the electric light savings (see Figure 3-7). The optimal skylight area can be calculated by some building energy simulation programs (EnergyPro, DOE-2, EnergyPlus, TRNSYS, SkyCalc, etc.) that perform an hourly annual calculation of both the electric lighting and HVAC impacts of skylights. Contact the energy efficiency program staff at your local energy provider for more information on how your skylight system can be optimized for energy savings.

When skylights are used to save energy by displacing electric lighting, they must be diffusing so that the light is spread broadly illuminating a relatively wide area around the skylight and so that excessive glare is avoided. When either the skylight glazing or the diffuser or lens on the light well is measured according to ASTM D1003[1] and has a haze rating greater than 90%, the skylight system is deemed to be "diffusing" and complies with the haze value requirement of §143(c)3. For any skylight you are considering for compliance with §143(c), contact the skylight manufacturer and ask for documentation of the haze rating of the skylight glazing. Almost all diffusing skylights comply with this requirement. Clear or bronze skylights usually do not comply and must have a separate diffuser with a haze rating of greater than 90% to make the skylight system comply.

Any skylight system that is used to comply with §143(c) invokes the mandatory control requirements in §131(c)2 for automatic lighting controls in the daylit area under skylights. When the total daylit area under skylights exceeds 2,500 ft² the general lighting must be controlled by an automatic multi-level daylighting control or a multi-level astronomical time switch. See Chapter 5 in this manual for a detailed discussion of these mandatory controls.

The requirements of §143(c) apply to new large open spaces such as warehouses and medium to large retail. These requirements also apply when a large space such as a warehouse is conditioned for the first time or when the lighting system is installed for the first time §149(b)1F. Thus when applying for a permit for a warehouse or other large nonpartitioned structure without submitting a lighting plan, one should determine in advance its final use, as installing skylights while the shell is being constructed is less expensive then retrofitting them later.

Substituting Skylights with Windows to Meet §143(c) Requirements

The standards allow the daylighting area requirements for spaces affected by §143(c) to be fulfilled by using a combination of skylights and windows. One may choose to provide all daylighting through windows alone, skylights alone or a combination of both.

It is important to note that the standards prohibit double-counting of daylit area that may be served by multiple skylights or windows due to close spacing of the skylights or windows.

---

[1] ASTM D1003-00 Standard Test Method for Haze and Luminous Transmittance of Transparent Plastics. American Society for Testing and Materials, West Conshohocken, PA

The example in Figure 3-8 below, shows a space with daylighting provided through two skylights in the roof and one window mounted high on the external wall.

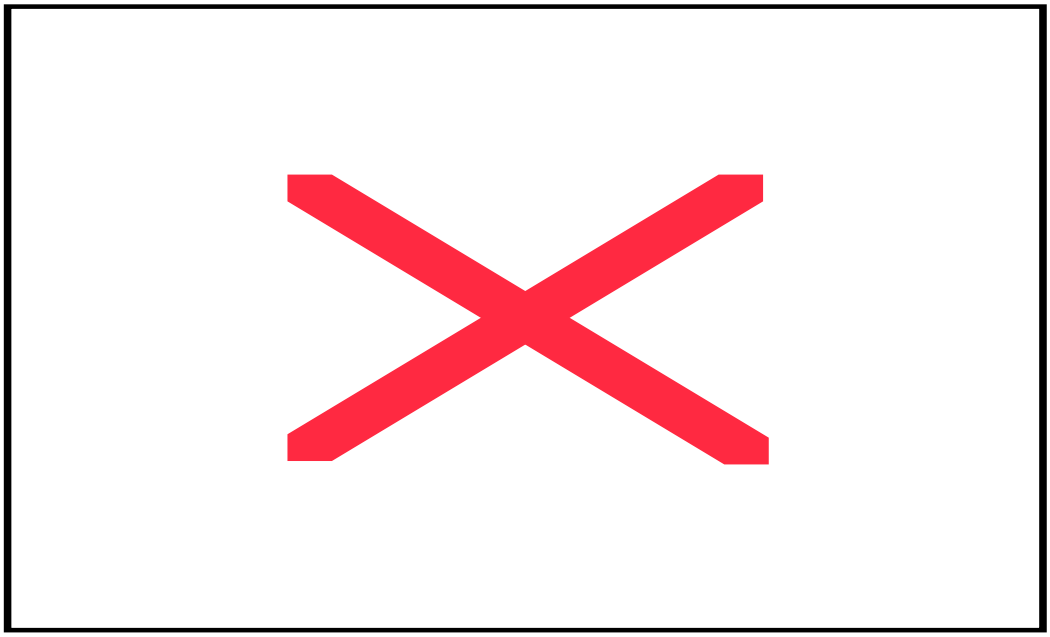

Figure 3-8 – Daylit Area Tradeoff between Skylights and Windows

In order to calculate the total daylit area in this scenario, the following logic must be used:

- Calculate the Primary Sidelit Daylit Area near the window as explained in Chapter 5 of this manual.
    - If the Primary Sidelit Daylit Area thus calculated is greater than 50% of the total floor area of the space, there is no need for additional windows or skylights to meet the requirements of §143(c)
- If the Primary Sidelit Daylit Area is less than 50% of the floor area of the space, skylights need to be added in order to reach the 50% space area threshold.
- Calculate Daylit Area under Skylights as explained in Chapter 5 of this manual
    - Subtract any overlaps in daylit areas due to multiple skylights or due to windows and skylights spaced close to each other.
- Add the net Daylit Area under Skylights (minus the overlaps) to the Primary Sidelit Daylit Area to get the Total Daylit Area in space

- As long as the Total Daylit Area in space is equal to or greater than 50% of the floor area of the space, the requirements of §143(c) are met.

It is important to note that any skylights used to achieve the required Total Daylit Area must meet all applicable requirements for Diffusion, U-Factor and SHGC as defined in §143(c)3 of the Standards.

Any windows used to achieve the required Total Daylit Area must meet appropriate requirements of §143(A)5 of the Standards.

The general lighting in the space must also meet the lighting controls requirements in §131(b) and §131(c)2 as explained in Chapter 5 of this manual.

Example 3-3

Question

Are rooftop monitors considered to be windows or skylights?

Answer

Standards currently define skylights as glazing having a slope less than 60 degrees from the horizontal with conditioned or unconditioned space below. Since rooftop monitors have a slope greater than 60 degrees, they are therefore considered to be windows. To qualify for power adjustment factors (PAF), rooftop monitors must comply with the automatic control requirements for windows.

The daylit area by windows is calculated as if they were in an exterior wall. The daylit area extends 2 ft on either side of the monitor window and one window head height perpendicular into the room or to the closest partition that is greater than 5 ft tall. The figure below shows a section view of the daylit area under rooftop monitors.

Section view of daylit area under rooftop monitors

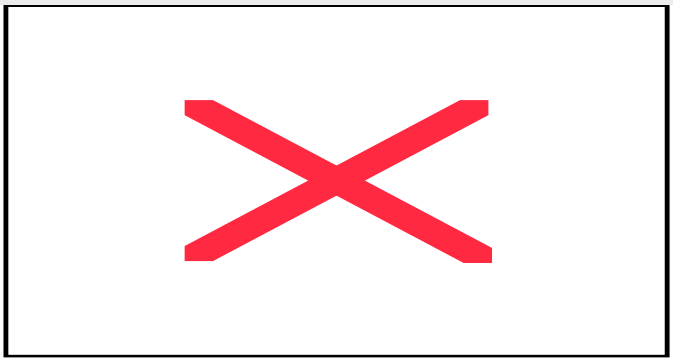

3.2.5 Determining Fenestration U-factors

§116 and §141(c)4D

The U-factor for a fenestration product describes the rate of heat flow through the entire unit, not just the glass or plastic glazing material. The U-factor includes the heat flow effects of the glass, the frame, and the edge-of-glass conditions (there also may be spacers, sealants and other elements that affect heat conduction). For skylights mounted on a curb that is part of the roof construction, the total heat flow considered in determining the U-factor includes losses through the frame, glazing and other components, but not through the curb that is part of the roof construction.

For skylights rated with curb as described in Tables 143-A, 143-B, and 143-C, there is a portion of the skylight product that includes a curb, and the effects of this curb are included in the product U-factor rating. This curb included in the product rating is separate from the curb that is a part of the roof construction. For projecting windows (greenhouse windows), the total heat flow includes the side panels, base and roof of the projecting window assembly. However, the area used to determine the U-factor for skylights and projecting windows is the rough framed opening. Using the rough framed opening eases the process of making load calculations and verifying compliance since the rough framed opening is easier to calculate than the actual surface area of the projecting window or skylight.

Reference Joint Appendix JA1 lists many of the terms and product characteristics that relate to fenestration U-factors. In particular see the definitions for window, skylight, window area, skylight area, site-built fenestration, and field-fabricated fenestration.

Error! Reference source not found. shows acceptable procedures for determining fenestration U-factors for four classes of fenestration: manufactured windows, manufactured skylights, site-built fenestration, and field-fabricated fenestration.

Table 3-4 – Acceptable Methods for Determining U-factors

Fenestration Class				
U-factor Determination Method	**Manufactured Windows**	**Manufactured Skylights**	**Site-Built Fenestration**	**Field-Fabricated Fenestration**
NFRC 100	✓	✓	✓	
Default U-factors from Standards Table 116-A	✓	✓	✓	✓
Alternate Default U-factor equation from Reference Nonresidential Appendix NA6[1,2]		✓	✓	
Note 1: The default U-factors from Nonresidential Reference NonresidentialAppendixNA6may also be used for site-built skylights.				
Note 2: The default U-factors from Reference Joint Appendix NA6may be used only for site-built fenestration in buildings having less than 10,000 ft² of site-built fenestration area.				

The preferred methods for determining fenestration U-factor are those in NFRC 100 for manufactured windows and for site-built fenestration. For manufactured windows, the default U-factors in Standards Table 116-A (reproduced in Table 3-6 below) must be used if NFRC-determined U-factors are not available. These U-factors represent the high side of the range of possible values, thereby encouraging designers to obtain ratings through NFRC procedures, when they are available.

NFRC U-factors are becoming more common for skylights, increasingly; more manufacturers are getting NFRC labels for their skylights, including tubular skylights, which includes U-factor, and SHGC. If NFRC data is not available, the Alternative Default U-factor equation from Reference Nonresidential Appendix NA6, equation NA6-1 may be used for skylights. This equation is derived from NFRC-100 and represent average typical values, as opposed to the values published in Table 116-A in the Standards that are on the high side of the range of typical values.

The recommended method for determining the U-factor of site-built fenestration systems (curtain walls and storefront systems) is the NFRC 100 procedure. This requires that site-build fenestration, including curtain walls go through the NFRC process for obtaining label certificates for site-built products. If the building has less than 10,000 ft² of site-built fenestration area, which includes windows, non-opaque doors, and skylights, then U-factors used for compliance for site-built products may instead be calculated from equation NA6-1 from the Reference Nonresidential Appendix NA6, or Title 24 default values from Table 116-A.

For buildings with more than 10,000 ft² of site-built fenestration area, there are two compliance choices with regard to U-factor and labeling of site-built fenestration:

1. Go through the NFRC process and obtain a label certificate. This is the option described in §10-111(a)1A.
2. Provide a default label certificate using the default U-factors from Standards Table 116-A. This option results in very conservative U-factors.

Field-Fabricated Fenestration Product or Exterior Door

Field-fabricated fenestration is fenestration assembled on site that does not qualify as site-built fenestration. It includes windows where wood frames are constructed from raw materials at the building site, salvaged windows that do not have an NFRC label or rating, and other similar fenestration items.

For field-fabricated fenestration, the U-factor and solar heat gain coefficient are default values (see Standards Tables 116-A and 116-B).

Exterior doors are doors through an exterior partition. They may be opaque or have glazed area that is less than or equal to one-half of the door area. U-factors for opaque exterior doors are listed in Reference Joint Appendix JA4, Table 4.28. Doors with glazing for more than one-half of the door area are treated as fenestration products and must meet all requirements and ratings associated with fenestration.

When a door has glazing of less than one-half the door area, the portion of the door with fenestration must be treated as part of the envelope fenestration independent of the remainder of the door area.

A field-fabricated product may become a site-built product if all the requirements for receiving a label certificate required of site-built products are met.

Table 3-5 – Standards Table 116-A Default Fenestration Product U-Factors

FRAME TYPE[1,2]	PRODUCT TYPE	SINGLE PANE U-FACTOR	DOUBLE-PANE U-FACTOR	GLASS BLOCK U-FACTOR[1]
Metal	Operable	1.28	0.79	0.87
Metal	Fixed	1.19	0.71	0.72
Metal	Greenhouse/garden window	2.26	1.40	N.a.
Metal	Doors	1.25	0.77	N.a.
Metal	Skylight	1.98	1.3	N.a.
Metal, Thermal Break	Operable	N/A	0.66	N.a.
Metal, Thermal Break	Fixed	N/A	0.55	N.a.
Metal, Thermal Break	Greenhouse/garden window	N/A	1.12	N.a.
Metal, Thermal Break	Doors	N/A	0.59	N.a.
Metal, Thermal Break	Skylight	N/A	1.11	N.a.
Nonmetal	Operable	0.99	0.58	0.60
Nonmetal	Fixed	1.04	0.55	0.57
Nonmetal	Doors	0.99	0.53	N.a.
Nonmetal	Greenhouse/garden windows	1.94	1.06	N.a.
Nonmetal	Skylight	1.47	0.84	N.a.

1. For all dual-glazed fenestration products, adjust the listed U-factors as follows:

c. Add 0.05 for products with dividers between panes if spacer is less than 7/16 inch wide.

d. Add 0.05 to any product with true divided lite (dividers through the panes).

2. Translucent or transparent panels shall use glass block values.

3.2.6 Determining Relative Solar Heat Gain

§143(a)5C

Relative solar heat gain (RSHG) is essentially the same as SHGC, except for the external shading correction. It is calculated by multiplying the SHGC of the fenestration product by an overhang factor. If an overhang does not exist, then the overhang factor is 1.0.

Overhang factors may either be calculated (see **Error! Reference source not found.**) or taken from **Error! Reference source not found.** and depend upon the ratio of the overhang horizontal length (H) and the overhang vertical height (V). These dimensions are measured from the vertical and horizontal planes passing through the bottom edge of the window glazing, as shown in **Error! Reference source not found.**. An overhang factor may be used if the overhang

extends beyond both sides of the window jamb a distance equal to the overhang projection (§143(a)5Cii). The overhang projection is equal to the overhang length (H) as shown in Figure 3-9. If the overhang is continuous along the side of a building, this restriction will usually be met. If there are overhangs for individual windows, each must be shown to extend far enough from each side of the window.

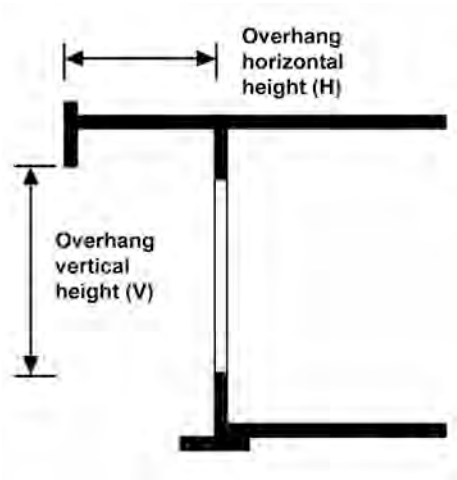

Figure 3-9 – Overhang Dimensions

Equation3-1 Relative Solar Heat Gain

RSHG = SHGCwin x OHF

Where

RSHG = Relative solar heat gain.

SHGCwin = Solar heat gain coefficient of the window.

$$OHF = OverhangFactor = 1 + \frac{aH}{V} + b\left(\frac{H}{V}\right)^2$$

Where

H = Horizontal projection of the overhang from the surface of the window in ft, but no greater than V.

V = Vertical distance from the windowsill to the bottom of the overhang, in ft.

a = -0.41 for North-facing windows, -1.22 for south-facing windows, and -0.92 for east- and west-facing windows.

b = 0.20 for North-facing windows, 0.66 for south-facing windows, and 0.35 for east- and west-facing windows.

Table 3-6 – Overhang Factors

H/V	North	South	East/West
0.00	1.00	1.00	1.00
0.10	0.96	0.88	0.91
0.20	0.93	0.78	0.83
0.30	0.90	0.69	0.76
0.40	0.87	0.62	0.69
0.50	0.85	0.56	0.63
0.60	0.83	0.51	0.57
0.70	0.81	0.47	0.53
0.80	0.80	0.45	0.49
0.90	0.79	0.44	0.46
1.00 or greater	0.79	0.44	0.43

To use Table 3-6 measure the horizontal projection of the overhang (H) and the vertical height from the bottom of the glazing to the shading cut-off point of the overhang (V). Then calculate H/V. Enter the table at that point. If the calculated H/V falls between two values in the Table 3-6, choose the next higher value to the calculated H/V value from the Table. Move across to the column that corresponds to the orientation of the window and find the overhang factor. Note that any value of H/V greater than one has the same overhang factor (for a given orientation) shown in the last row of the table.

Figure 3-10 graphs the overhang factors of the various orientations as a function of H/V. It shows that overhangs have only a minor effect on the north (maximum reduction in SHGC is only about 20%). East, west and south overhangs can achieve reductions of 55%–60%. The benefits of the overhang level off as the overhang becomes large. (Note: this graph is presented only to illustrate the benefits of overhangs.)

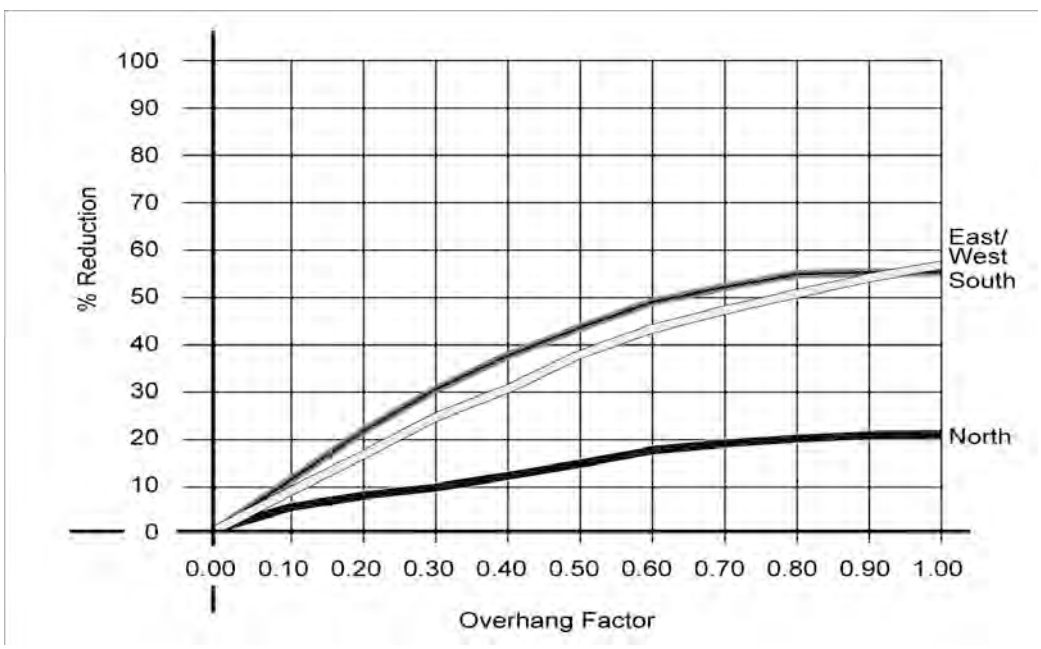

Figure 3-10 – Graph of Overhang Factors

Example 3-4

Question

An east-facing window has glass with a solar heat gain coefficient of 0.71. It has a fixed overhanging eave that extends three ft out from the plane of the glass (H = 3), and is six ft above the bottom of the glass (V = 6). The overhang extends more than three ft beyond each side of the glass and the top of the window is less than two ft vertically below the overhang. What is the RSHG for this window?

Answer

First, calculate H/V. This value is 3 / 6 = 0.50. Next, find the overhang factor from Table 3-6. For east-facing windows, this value is 0.63. Finally, multiply it by the solar heat gain coefficient to obtain the RSHG: 0.63 x 0.71 = 0.45.

3.2.7 Determining Solar Heat Gain Coefficients

§141(c)5

The solar heat gain coefficient (SHGC) is the ratio of the solar heat gain entering the space through the fenestration area to the incident solar radiation the lower the SHGC, the less solar heat gain. For SHGC measurements, the solar radiant energy includes infrared, visible light and ultraviolet. A low SHGC reduces solar heat gains, thereby reducing the amount of air conditioning energy needed to maintain comfort in the building. A low SHGC may also increase the amount of heat needed to maintain comfort in the winter. The technical definition of SHGC is the ratio of solar energy entering the window (or fenestration product) to the amount that is incident on the outside of the window. As with U-factors, the window frame, sash and other opaque components, and type of glazing affect SHGC.

There are four acceptable methods for determining SHGC for use with the Standards (see **Error! Reference source not found.**). The preferred methods are two NFRC procedures: NFRC 200 for manufactured fenestration, which includes manufactured skylights, and NFRC 100 for site-built fenestration, which includes site-built skylights. The NFRC standard for rating the SHGC of tubular daylighting devices (TDD's or tubular skylights) is appropriate only for attic configurations where the insulation layer is directly on top of the ceiling. For spaces with insulated roofs, use the NFRC or default rating of the top dome only.

A third method is to use the SHGC Defaults from Standards Table 116-B or (see **Error! Reference source not found.**3-7)These values are on the high side and do not account for special coatings and other technologies that may be part of a proposed fenestration product.

Table 3-7 – Standards Table 116-B Default Fenestration Product SHGC

FRAME TYPE[1,2]	PRODUCT	Glazing	TOTAL WINDOW SHGC		
			SINGLE PANE	DOUBLE-PANE	GLASS BLOCK[1]
Metal	Operable	Clear	080	0.70	0.70
Metal	Fixed	Clear	08.	0.73	0.73
Metal	Operable	Tinted	0.67	0.59	N.a.
Metal	Fixed	Tinted	0.68	0.60	N.a.
Metal, Thermal Break	Operable	Clear	N.a.	0.63	N.a.
Metal, Thermal Break	Fixed	Clear	N.a.	0.69	N.a.
Metal, Thermal Break	Operable	Tinted	N.a.	0.53	N.a.
Metal, Thermal Break	Fixed	Tinted	N.a.	0.57	N.a.
Nonmetal	Operable	Clear	0.74	0.65	0.70
Nonmetal	Fixed	Clear	0.76	0.67	0.67
Nonmetal	Operable	Tinted	0.60	0.53	N.a.
Nonmetal	Fixed	Tinted	0.63	0.55	N.a.

1. Translucent or Transparent panels shall use glass block values.

The fourth method, applicable only to skylights and site-built fenestration in buildings with less than 10,000 ft^2 of site-built fenestration, is to use Equation NA6-2 in the Reference Nonresidential Appendix NA6. This equation calculates an overall SHGC for the fenestration ($SHGC_t$) assuming a default framing factor and using the center-of-glass SHGC value ($SHGC_c$) for the glazing from the manufacturer's literature.

Buildings that have 10,000 ft^2 or more of site-built fenestration cannot use the Alternative Default Fenestration Procedure, Equation NA6-1 or NA-2.

Windows are not allowed SHGC credit for any interior shading such as draperies or blinds. Only exterior shading devices such as shade screens permanently attached to the building or structural components of the building can be modeled through performance standards compliance. Manually operable shading devices cannot be modeled. Only overhangs can be credited using the relative solar heat gain procedure for prescriptive compliance.

Table 3-8 – Methods for Determining SHGC

SHGC Determination Method	Manufactured Windows	Manufactured Skylights	Site-Built Fenestration	Field-Fabricated Fenestration
NFRC 200	✓	✓ (Note 2)		
NFRC 100			✓	
Default SHGC values from Standards Table 116-B)	✓	✓	✓	✓
SHGC alternative procedure from Reference Nonresidential Appendix NA6, Equation NA6-2		✓	✓(Note 1)	

Note 1: The SHGC procedure defined in Reference Nonresidential AppendixNA6 may be used only for site-built fenestration in buildings that have less than 10,000 ft² of site-built fenestration area. Site-built fenestration includes site-built skylights.

Note 2: Tubular Daylight Device SHGC rating is appropriate only for insulated ceilings.

3.2.8 Determining Visible Transmittance (VT)

Visible Transmittance (VT) is a property of glazing materials that has a varying relationship to SHGC. VT is the ratio of light that passes through the glazing material to the light that is incident on the outside of the glazing. Light is the portion of solar energy that is visible to the human eye. VT is an important characteristic of glazing materials, because it affects the amount of daylight that enters the space and how well views through windows are rendered. Glazing materials with a very low VT have little daylighting benefit and views appear dark, even on bright days. The ideal glazing material for most of California's summer climates would have a high VT and a low SHGC. Such a glazing material would allow solar radiation in the visible spectrum to pass while blocking radiation in the infrared and ultraviolet spectrums. Materials that have this quality are labeled "spectrally selective" and have a VT that is 20% or so higher than the SHGC. Higher VT can result in energy savings in lighting systems. The value of VT for a given material is found in the manufacturer's literature.

3.2.9 Site-Built Fenestration Roles and Responsibilities

(§116, §10-111)

Manufactured fenestration products are factory-assembled as a unit, and the manufacturer is able to assume the burden of testing and labeling. However, with site-built fenestration, multiple parties are responsible. Architects and/or engineers design the basic glazing system by specifying the components, the geometry of the components, and sometimes, the method of assembly. An extrusion manufacturer provides the mullions and frames that support the glazing and is responsible for thermal breaks. A glazing manufacturer provides the glazing units, cut to size and fabricated as insulated glass (IG) units. The glazing manufacturer is responsible for tempering or heat strengthening, the tint of the glass, any special coatings, the spacers, and the sealants. A glazing contractor (usually a subcontractor to the general contractor) puts the system together at the construction site or their shop and is responsible for many quality aspects. Predetermining the energy performance of site-built fenestration as a system is more challenging than for manufactured units.

One of the parties (architect, glazing contractor, extrusion manufacturer, IG fabricator, or glass manufacturer) must take responsibility for testing and labeling of the site-built fenestration system under the most recent NFRC 100 procedure. The responsible party must obtain a label certificate as described in Section 3.2.1.

It is typical for the glazing contractor to assume responsibility for the team and to coordinate the certification and labeling process. A common procedure is for the design team to include language in the contract with the general contractor that requires that the general contractor be responsible; the general contractor typically assigns this responsibility to the glazing contractor. Once the responsible party has established a relationship with an NFRC,

It is not necessary to complete the NFRC testing and labeling prior to completing the compliance documentation and filing the building permit application. However, plans examiners should verify that the fenestration performance shown in the plans and specifications and used in the compliance calculations is “reasonable” and achievable. This requires some judgment and knowledge on the part of the plans examiner. Generally, designers will know the type of glass that they plan to use and whether or not the frame has a thermal break or is thermally improved. This information is adequate to consult the default values for U-factor and SHGC in Nonresidential Reference Appendix NA6. If the values used for compliance are within 5% of the Appendix NA6 values, then the values may be considered reasonable for plan check. If the compliance values are outside the 5% range, the plans examiner should request information from the designers to justify the proposed values.

After the construction contract is awarded, the glazing contractor or other appropriate party assumes responsibility for getting the NFRC Label Certificate. NFRC issues a separate label certificate for each “product line.” Each label certificate has the same information as the NFRC temporary label for manufactured products, but includes other information specific to the project such as the name of the glazing manufacturer, the extrusion contractor, the places in the building where the product line is used, and other details. The label certificate remains on file in the construction office for the building inspector to view. After construction is complete, the label certificate should be filed in the building office with the as-built drawings and other operations and maintenance data. This will give building managers the information needed for repairs or replacements.

Example 3-5

Question

A designer is using a U-factor of 0.57 for compliance with a curtain wall system. The glazing system uses two lites of 1/4 in (6mm). glass with a low-e=0.1 coating on the second surface. The air gap is 1/2 in (12 mm). A standard metal frame is proposed for the curtain wall system. Is 0.57 a reasonable U-factor for compliance, and can it reasonably be achieved by the glazing contractor through the NFRC process for site-built fenestration?

Answer

The default U-factor for this glazing combination from Nonresidential Reference Appendix NA6 is 0.59. The proposed factor of 0.57 is within 5% and should be considered reasonable.

Example 3-6

Question

The envelope and space conditioning system of an office building with 120,000 ft^2 of conditioned floor area is being altered. The building has 24,000 ft^2 of vertical fenestration. Which of the following scenarios does the NFRC label certificate requirement apply to?

1. Existing glazing remains in place during the alteration.
2. Existing glazing is removed, stored during the alteration period and then re-installed (glazing is not altered in any way).
3. Existing glazing is removed and replaced with new site-built glazing with the same dimensions and performance specifications.
4. Existing glazing on the north façade (total area 6000 ft^2) is removed and replaced with site-built fenestration.

Answer

NFRC label certificate or CEC default values requirements do not apply to scenarios 1, and 2 but does apply to scenario 3.

1. Requirement does not apply because the glazing remains unchanged and in place.
2. Exception to §116(a)1 applies in this case (this exception applies to fenestration products removed and reinstalled as part of a building alteration or addition).
3. Use either NFRC Label Certificate or use Table 116-A default values, applies in this case as 24,000 ft^2 (more than the threshold value of 10,000 ft^2) of new fenestration is being installed.
4. Since the site-built fenestration area is less than 10,000 ft^2, use either NFRC label certificate, the applicable default U-factor and SHGC set forth in Nonresidential Reference Appendix NA6, or CEC default values.

3.3 *Opaque Envelope Insulation*

The requirements for opaque surfaces include both mandatory measures and prescriptive requirements.

Sloping surfaces are considered either a wall or a roof, depending on their slope (see Figure). If the surface has a slope of less than 60° from horizontal, it is considered a roof; a slope of 60° or more is a wall. This definition extends to fenestration products, including the windows in walls and any skylights in roofs.

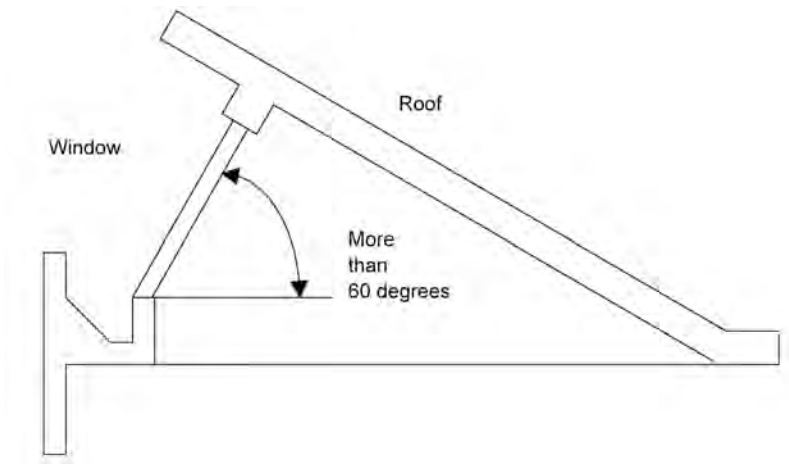

Figure 3-11 – Slope of a Wall or Window (Roof or Skylight slope is less than 60°)

The window is considered part of the wall because the slope is over 60º. Where the slope less than 60º, the glazing indicated as a window would be a skylight.

3.3.1 Mandatory Measures

Certification of Insulation Materials

§118(a)

The California Quality Standards for Insulating Materials ensure that insulation sold or installed in the state performs according to the stated R-value and meets minimum quality, health, and safety standards.

Manufacturers must certify that insulating materials comply with *California Quality Standards for Insulating Materials* (CCR, Title 24, Part 12, Chapters 12-13), which ensure that insulation sold or installed in the state performs according to stated R-values and meets minimum quality, health, and safety standards. Builders may not install ~~the~~ ~~any types of~~ insulating materials, ~~including those listed in Table Error!~~ ~~**No text of specified style in document.**~~ ~~1~~, unless the product has been ~~thus~~ certified by the Department of Consumer Affairs, Bureau of Home Furnishing and Thermal Insulation. Builders and enforcement agencies ~~should~~ shall use the Department of Consumer Affairs ~~*Consumer Guide and*~~ *Directory of Certified Insulation Material* to ~~check compliance~~ verify the certification of the insulating material. The Standards no longer allow using the R-value of the cavity or continuous insulation to demonstrate compliance with the insulation values of the Reference Joint Appendix JA4; only U-factors may be used to demonstrate compliance. ~~(Note: this is not an Energy Commission publication.)~~ If an insulating product is not listed in the most recent edition of the directory, contact the Department of Consumer Affairs, Bureau of Home Furnishing and Thermal Insulation Program, at (916) 574-2041.

~~*Table* **Error! No text of specified style in document.** *1 – Insulation Materials Requiring Certification*~~

~~Type~~	~~Form~~
~~Aluminum foil~~	~~Reflective foil~~
~~Cellular glass~~	~~Board form~~
~~Cellulose fiber~~	~~Loose fill and spray applied~~
~~Mineral aggregate~~	~~Board form~~
~~Mineral fiber~~	~~Blankets, board form, loose fill~~
~~Perlite~~	~~Loose fill~~
~~Phenolic~~	~~Board form~~
~~Polystyrene~~	~~Board form, molded extruded~~
~~Polyurethane~~	~~Board form and field applied~~
~~Polyisocyanurate~~	~~Board form and field applied~~
~~Urea formaldehyde~~	~~Foam field applied~~
~~Vermiculite~~	~~Loose fill~~

Urea Formaldehyde Foam Insulation

§118(b)

The mandatory measures restrict the use of urea formaldehyde foam insulation. The restrictions are intended to limit human exposure to formaldehyde, which is a volatile organic chemical known to be harmful to humans.

If foam insulation is used that has urea formaldehyde, it must be installed on the exterior side of the wall (not in the cavity of framed walls), and a continuous barrier must be placed in the wall construction to isolate the insulation from the interior of the space. The barrier must be four-mil (0.1 mm) thick polyethylene or equivalent.

Flamespread Rating

§118(c)

The *California Quality Standards for Insulating Materials* also require that all exposed installations of faced mineral fiber and mineral aggregate insulations use fire retardant facings that have been tested and certified not to exceed a flame spread of 25 and a smoke development rating of 450. Insulation facings that do not touch a ceiling, wall, or floor surface, and faced batts on the underside of roofs with an air space between the ceiling and facing are considered exposed applications.

Flamespread ratings and smoke density ratings are shown on the insulation or packaging material or may be obtained from the manufacturer.

~~*Insulation in Existing Buildings*~~

~~*§118(d)*~~

~~The Standards require that insulation installed in existing attics meet a minimum insulation level of R-38 in climate zones 1 and 16 and R-30 in other climate zones. An exception is given for attics that do not have sufficient accessible space for the required R-value of insulation.~~

Insulation over T-bar Ceilings

§118(e)

Insulation installed on the top of suspended (T-bar) ceilings with removable ceiling panels may not be used to comply with the efficiency standards unless the installation meets the criteria described in the exception to §118(e)3 below. Insulation may be installed in this location for other purposes such as for sound control, but it will have no value in terms of meeting roof/ceiling insulation requirements of the Standards.

Acceptable insulation installations include placing the insulation in direct contact with a continuous roof or ceiling that is sealed to limit infiltration and exfiltration as specified in §117, including but not limited to placing insulation either above or below the roof deck or on top of a drywall ceiling.

When insulation is installed at the roof in nonresidential buildings, the space between the ceiling and the roof is considered to be either directly or indirectly conditioned space. This space must not include fixed vents or openings to the outdoors or to unconditioned spaces. This space must not be considered an attic for the purposes of complying with CBC attic ventilation requirements. Vents that do not penetrate the roof deck and that are designed for wind resistance for roof membranes are acceptable.

EXCEPTION to §118(e)3: When there are conditioned spaces with a combined floor area no greater than 2,000 ft^2 in an otherwise unconditioned building, and when the average height of the space between the ceiling and the roof over these spaces is greater than 12 ft, insulation placed in direct contact with a suspended ceiling with removable ceiling panels shall be an acceptable method of reducing heat loss from a conditioned space and shall be accounted for in heat loss calculations.

U-factors for this exception are found in ~~Joint Appendix IV~~Reference Joint Appendix JA4, Table ~~IV.~~4.2.8.

Demising Walls

§118(f)

Demising walls separating conditioned space from enclosed unconditioned space must be insulated with a minimum of R-13 insulation if the wall is a wood- or metal-framed assembly. This requirement applies to buildings meeting compliance under the prescriptive or performance approach. This requirement assures at least some insulation in a wall where an adjoining space may remain unconditioned indefinitely. Demising walls that are constructed of brick, concrete masonry units, or solid concrete are not required to be insulated.

Insulation Requirements for Heated Slab Floors

§118(g)

Heated slab-on-grade floors must be insulated according to the requirements in Table 118-A of the Standards. The top of the insulation must be protected with a rigid plate to prevent intrusion of insects into the building foundation.

A common location for the slab insulation is on the perimeter of the foundation. Insulation that extends downward to the top of the footing is acceptable. Otherwise, the insulation must extend downward from the level of the top of the slab, down 16" inches (40 cm) or to the frost line, whichever is greater.

For below grade slabs, vertical insulation shall be extended from the top of the foundation wall to the bottom of the foundation (or the top of the footing) or to the frost line, whichever is greater.

Another option is to install the insulation between the heated slab and foundation wall. In this case insulation must extend downwards to the top of the footing and then extend horizontally inwards a distance of 4 feet towards the center of the slab. R-5 vertical insulation is required in all climates but climate zone 16, which requires R-10 of vertical insulation and R-7 horizontal insulation.

Wet Insulation Systems

§118(h).

Wet insulation systems are roofing systems where the insulation is installed above the roof's waterproof membrane. Water can penetrate this insulation material and have an effect on the energy performance of the roofing assembly in wet and cool climates. In climate zones 1 and 16, the insulating R-value of continuous insulation materials installed above the roof's waterproof membrane must be multiplied times 0.8 before choosing the table column in Reference Joint Appendix JA4 for determining assembly U-factor. See the footnotes for Tables 4.2.1 through 4.2.7 in the Reference Joint Appendix JA4.

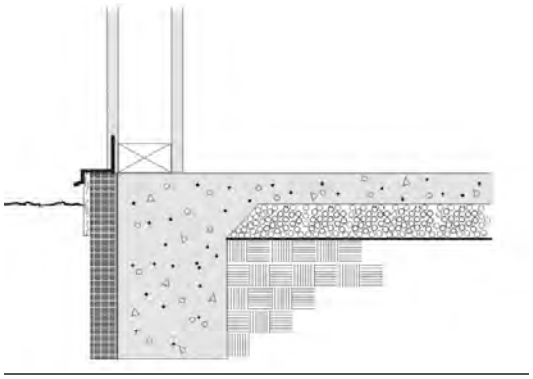

Figure 3-12: Perimeter slab insulation

3.3.2 Prescriptive Insulation Requirements

The prescriptive requirements include minimum insulation levels for roofs/ceilings, walls, and floors. The requirements are expressed ~~in two ways:~~as a maximum U-factor~~ and a minimum R-value~~. The U-factor criteria are ~~also~~ given for different classes of construction such as wood- framed, metal-framed, metal building, and mass assembles. . ~~A roof with metal framing members or a metal deck may comply using the minimum R-value from Standards Tables 143-A, 143-B, and 143-C if a continuous insulation layer with at least that minimum~~

R-value is installed either above the roof deck or between the roof deck and the structural members supporting the roof deck. The Aassembly U-factors and descriptions of a particular roof/ceiling, wall or floor can be found are taken from in the appropriate tables listed in Reference Joint Appendix JA4. The reason U-factors are used instead of R-values is because the U-factor is the overall coefficient of thermal transmittance for a construction assembly whereas the R-value is the nominal measure of the thermal insulation of a building envelope component. When an assembly of the proposed building does not precisely match one of the choices in Reference Joint Appendix JA4, choose the best match which captures (a) the overall type of assembly (e.g., masonry, wood frame, metal frame); and (b) an insulation level in the JA4 assembly which is the same or less than the proposed assemblyAlternatively, a roof with metal framing members or a metal deck may comply if 1) a continuous layer of rigid insulation with a minimum R-value of R-10 is installed either above the roof deck or between the roof deck and its structural members, and 2) insulation with a minimum R-value equal to or greater than the applicable value in Standards Table 143-A, Table 143-B, or Table 143-C is installed between the structural members.

The criteria also vary by climate zone and occupancy. Standards Table 143-A has the criteria for nonresidential buildings including relocatable public school buildings where manufacturer certifies the use in a specified climate zones. Standards Table 143-B has the criteria for high-rise residential buildings and hotel/motel guest rooms. The latter is more stringent because the buildings are assumed to be heated and cooled continuously. Standards Table 143-C has criteria for in all relocatable public school buildings where the manufacturer certifies the use in all climate zones; these criteria are not climate independent, since manufacturers often do not know who will buy their product and which climate zone it will be located toinstalled in. The nonresidential and residential criteria are expressed for the five 16 climate regions zones described in the overview section of this chapter.

Exterior Roofs and Ceilings

§143(a)1B and §143(a)1C

Under the prescriptive requirements, exterior roofs or ceilings must have an assembly U-factor equal to or lower than the U-factor criterion for nonresidential, high-rise residential buildings and relocatable public school buildings in Table 1.(see Table 3-92 1]). The U-Factor values for exterior roofs and ceilings from Reference Joint Appendix JA4 shallmust be used to determine compliance with the maximum assembly U-factor requirements. The Standards no longer allow using the R-value of the cavity or continuous insulation to demonstrate compliance with the insulation values of the Reference Joint Appendix JA4; only U-factors may be used to demonstrate compliance. (Note: Installing a minimum R-Value of cavity or continuous insulation is no longer a compliance option).Exterior roofs or ceilings can meet the prescriptive requirements in one of two ways: have the required R-value of insulation (applicable only if the roof does not have metal framing or a metal deck) or haveby having an assembly U-factor that meets the maximum U-factor criterion (see Table **Error! No text of specified style in document.** 2Table 3-10). For most nonresidential buildings, a U-factor of 0.076 or R-value of R-11 to R-13 is required in the south coast climates (zones 6-9), a U-factor of

~~0.049 or non-metal R-19 is required in north coast locations, and a U-factor of 0.039 or R-25 is required for inland and mountain locations. and U-factor of 0.051 or non-metal R-19 is required in other locations. For high-rise residential buildings and hotel/motel guest rooms, a U-factor of 0.0510.039 or R-value of R-19 25 (for non-metal framing or deck) is required in the middle coast and south coast climates (zones 3 through 9and 5-7) and U-factor of 0.036 0.028 or R-30 38 for non-metal is required in most other California locations. For relocatable public school buildings, U-factor of 0.0510.039 or R-19 25 for non-metal is required in all climate zones.~~

~~***Wet Insulation Systems***~~

~~*§118(h).*~~

~~Wet insulation systems are roofing systems where the insulation is installed above the roof's waterproof membrane. Water can penetrate this insulation material and have an effect on the energy performance of the roofing assembly in wet and cool climates. In climate zones 1 and 16, the insulating R-value of continuous insulation materials installed above the roof's waterproof membrane must be multiplied times 0.8 before choosing the table column in Joint Appendix IVReference Joint Appendix JA4 for determining assembly U-factor. See the footnotes for Tables IV4.2.1 through IV4.2.7 in the Joint AppendicesReference Joint Appendix JA4.~~

Table 3-9 – Roof/Ceiling U-Factor Requirements
Summary from Standards Tables 143-A, ~~and~~ 143-B and 143-C

Building Type		1	2	3	4	5	6	7	8
Nonresidential	Metal Bldg	0.065	0.065	0.065	0.065	0.065	0.065	0.065	0.065
	Wood-fram~~ed~~ing & Other framing type	0.049	0.039	0.039	0.039	0.049	0.075	0.067	0.067
~~Residential~~ High-rise Residential	Metal Bldg	0.065	0.065	0.065	0.065	0.065	0.065	0.065	0.065
	Wood-fram~~ed~~ing & Other framing type	0.034	0.028	0.039	0.028	0.039	0.039	0.039	0.028
Relocatable Public School Buildings	Metal Bldg	~~0.065~~0.048	~~0.065~~0.048	~~0.065~~0.048	~~0.065~~0.048	~~0.065~~0.048	~~0.065~~0.048	~~0.065~~0.048	~~0.065~~0.048
	Wood-fram~~ed~~ing & Other framing type	0.039	0.039	0.039	0.039	0.039	0.039	0.039	0.039

Building Type		9	10	11	12	13	14	15	16
Nonresidential	Metal Bldg	0.065	0.065	0.065	0.065	0.065	0.065	0.065	0.065
	Wood-frame~~d~~ing & Other framing type	0.039	0.039	0.039	0.039	0.039	0.039	0.039	0.039
~~Residential~~ High-rise Residential	Metal Bldg	0.065	0.065	0.065	0.065	0.065	0.065	0.065	0.065
	Wood-frame~~d~~ing & Other framing type	0.028	0.028	0.028	0.028	0.028	0.028	0.028	0.028
Relocatable Public School Buildings	Metal Bldg	~~0.065~~0.048	~~0.065~~0.048	~~0.065~~0.048	~~0.065~~0.048	~~0.065~~0.048	~~0.065~~0.048	~~0.065~~0.048	~~0.065~~0.048
	Wood-frame~~d~~ing & Other framing type	0.039	0.039	0.039	0.039	0.039	0.039	0.039	0.039

~~Roof/Ceiling~~		~~Climate Zones~~				
~~Space Type~~	~~Criterion*~~	~~1,16~~	~~3-5~~	~~6-9~~	~~2,10-13~~	~~14, 15~~
~~Nonresidential~~	~~U-factor~~	~~0.051~~	~~0.051~~	~~0.076~~	~~0.051~~	~~0.051~~
	~~R-value~~	~~19~~	~~19~~	~~11~~	~~19~~	~~19~~
~~Residential High-rise~~	~~U-factor~~	~~0.036~~	~~0.051~~	~~0.051~~	~~0.036~~	~~0.036~~
	~~R-value~~	~~30~~	~~19~~	~~19~~	~~30~~	~~30~~
~~Relocatable Public School Buildings~~	~~U-factor~~	~~0.051~~	~~0.051~~	~~0.051~~	~~0.051~~	~~0.051~~
	~~R-value~~	~~19~~	~~19~~	~~19~~	~~19~~	~~19~~

~~*U-factors are the actual conductance of the entire assembly. R-values refer to the nominal R-value of the insulation within the framing.~~

~~NOTE: R-value cannot be used for compliance when the roof has metal framing members or a metal deck unless additional rigid insulation is installed. See §143 (a) 1 C.~~

~~For roof structures where a metal deck is in direct contact with metal supporting members, the R-value method of compliance may be used only if the required insulation R-value is continuous over the top of the metal deck or continuous and installed between the metal supports and the metal deck. For metal building roofs, R-10 continuous (rigid) insulation may be used across the supports with insulation of the designated R-value used between the framing.~~

Figure 3-13 shows acceptable means of meeting the ~~R-value~~U-factor criteria for metal roofs. For screw down metal roofs with no thermal blocks, continuous insulation will be required to meet the U-factor requirement.

The mandatory measures prohibit insulation from being installed directly over suspended ceilings (see previous section), except for limited circumstances.

~~When~~ T~~t~~he

U-factor ~~compliance method is used, U-factors~~ must be selected from ~~Joint Appendix IV~~Reference Joint Appendix JA4.

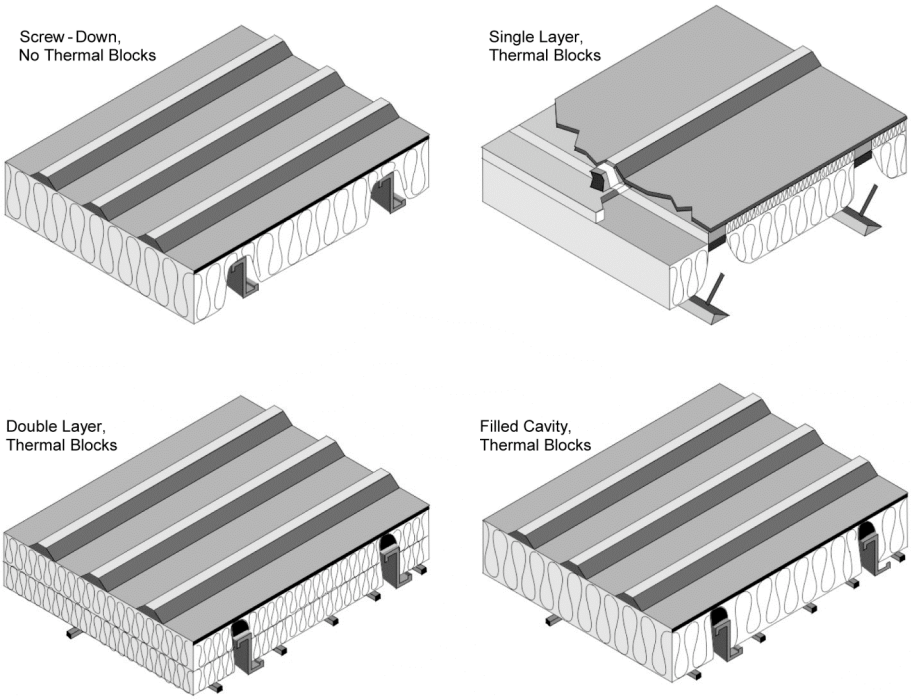

"Metal Building Roofs" Source: Reference Appendix JA4.2
Table 4.2.7 - U-factors for Metal Building Roofs

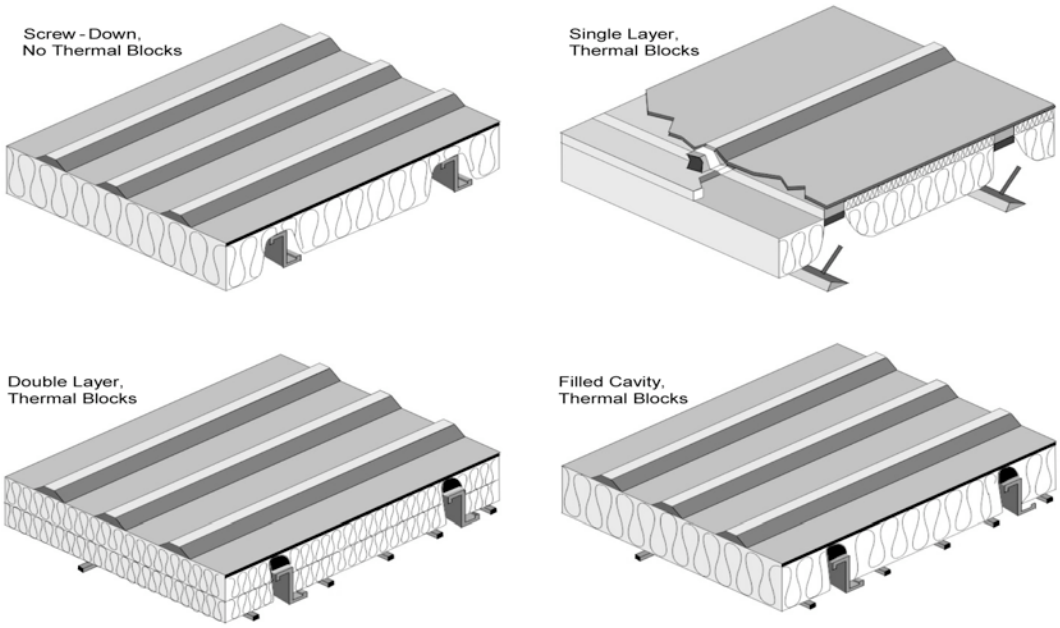

"Metal Building Roofs" Source: ACM Joint Appendix IV
Table IV.7 - U-factors for Metal Building Roofs

Figure 3-13 – Acceptable Metal to Metal Roof Constructions

Exterior Walls

§143(a)2

Under the prescriptive requirements, Eexterior walls must have an assembly U-factor equal to or lower than the U-factor criterion for nonresidential, high-rise residential buildings and relocatable public school buildings in Table 3-10 below. The U-factor for exterior walls from Reference Joint Appendix JA4 must be used to determine compliance with the maximum assembly U-factor requirements. The Standards no longer allow using the R-value of the cavity or continuous insulation to demonstrate compliance with the insulation values of the Reference Joint Appendix JA4; only U-factors may be used to demonstrate compliancecan meet the component requirements by either using a construction that has an assembly U-factor lower than or equal to the specified criteria as shown in Table **Error! No text of specified style in document.** 3Table 3-9, or installing the required R-value of insulation (Table 3-11).

> For nonresidential buildings, R-11 to R-13 insulation is required for the
>
> middle and south coasts (zones 3 through 9) for wood-framed construction and R-13 R-11 batt + R-7 continuous insulation (or equivalent) is required in other climate zones. For residential buildings and hotel/motel guest rooms, R-11 batt + R-7 continuous insulation is required for the middle and south coast areas (zones 3 through 9)most climate zones; R-13 R-11 batt + R-14 continuous insulation (or equivalent) is required for the valley and desert desert and mountain climates (zones 2 11 and 10 14 through 1516); and R-19 is required for the cold climates (zones 1 and 16). For relocatable public school buildings, R-13R-11 batt + R-7 continuous insulation is required in all climate zones.

For metal framed walls, with batt insulation between framing section, continuous insulation may need to be added to meet the U-factor requirements of the Standards.

For light mass walls, insulation is not required for buildings in south coast climates but is required for other climates. For heavy mass walls, insulation is not required for buildings in central coast or south coast climates but is required for other climates.

Table 3-10 – Wall U-Factor Requirements
Summary from Standards Tables 143-A, ~~and~~ 143-B and 143-C

Building Type		1	2	3	4	5	6	7	8
Nonresidential	Metal Bldg	0.113	0.061	0.113	0.061	0.061	0.113	0.113	0.061
	Metal Framed	0.098	0.062	0.082	0.062	0.062	0.098	0.098	0.062
	Mass Light	0.196	0.170	0.278	0.227	0.44	0.44	0.44	0.44
	Mass Heavy	0.253	0.650	0.650	0.650	0.650	0.690	0.690	0.690
	Wood Framed	0.102	0.059	0.110	0.059	0.102	0.110	0.110	0.102
Residential High-rise	Metal Bldg	0.061	0.061	0.061	0.061	0.061	0.061	0.061	0.061
	Metal Framed	0.105	0.105	0.105	0.105	0.105	0.105	0.105	0.105
	Mass Light	0.170	0.170	0.170	0.170	0.170	0.227	0.227	0.227
	Mass Heavy	0.160	0.160	0.160	0.184	0.211	0.690	0.690	0.690
	Wood Framed	0.059	0.059	0.059	0.059	0.059	0.059	0.059	0.059
Relocatable Public School Buildings	Metal Bldg	0.057	0.057	0.057	0.057	0.057	0.057	0.057	0.057
	Metal Framed	0.062	0.062	0.062	0.062	0.062	0.062	0.062	0.062
	Mass Light	0.170	0.170	0.170	0.170	0.170	0.170	0.170	0.170
	~~Mass Heavy~~	~~0.160~~	~~0.160~~	~~0.160~~	~~0.160~~	~~0.160~~	~~0.160~~	~~0.160~~	~~0.160~~
	Wood Framed	0.059	0.059	0.059	0.059	0.059	0.059	0.059	0.059

Building Type		9	10	11	12	13	14	15	16
Nonresidential	Metal Bldg	0.061	0.061	0.061	0.061	0.061	0.061	0.057	0.061
	Metal Framed	0.062	0.062	0.062	0.062	0.062	0.062	0.062	0.062
	Mass Light	0.44	0.170	0.170	0.170	0.170	0.170	0.170	0.170
	Mass Heavy	0.690	0.650	0.184	0.253	0.211	0.184	0.184	0.160
	Wood Framed	0.059	0.059	0.059	0.059	0.059	0.059	0.042	0.059
Residential High-rise	Metal Bldg	0.061	0.061	0.057	0.057	0.057	0.057	0.057	0.057
	Metal Framed	0.105	0.105	0.105	0.105	0.105	0.105	0.105	0.105
	Mass Light	0.196	0.170	0.170	0.170	0.170	0.170	0.170	0.170
	Mass Heavy	0.690	0.690	0.184	0.253	0.211	0.184	0.184	0.160
	Wood Framed	0.059	0.059	0.042	0.059	0.059	0.042	0.042	0.042
Relocatable Public School Buildings	Metal Bldg	0.057	0.057	0.057	0.057	0.057	0.057	0.057	0.057
	Metal Framed	0.062	0.062	0.062	0.062	0.062	0.062	0.062	0.062
	Mass Light	0.170	0.170	0.170	0.170	0.170	0.170	0.170	0.170
	~~Mass Heavy~~	~~0.160~~	~~0.160~~	~~0.160~~	~~0.160~~	~~0.160~~	~~0.160~~	~~0.160~~	~~0.160~~
	Wood Framed	0.059	0.059	0.059	0.059	0.059	0.059	0.059	0.059

~~Wall Requirements~~		~~Climate Zones~~				
~~Space Type~~	~~Criterion~~	~~1,16~~	~~3-5~~	~~6-9~~	~~2,10-13~~	~~14, 15~~
~~Nonresidential~~	~~R-value or~~	~~13~~	~~11~~	~~11~~	~~13~~	~~13~~
	~~U-factor~~					
	~~-Wood frame~~	~~0.102~~	~~0.110~~	~~0.110~~	~~0.102~~	~~0.102~~
	~~-Metal frame~~	~~0.217~~	~~0.224~~	~~0.224~~	~~0.217~~	~~0.217~~
	~~-Metal building~~	~~0.113~~	~~0.123~~	~~0.123~~	~~0.113~~	~~0.113~~
	~~-Mass/7.0≤ HC<15.0~~	~~0.330~~	~~0.430~~	~~0.430~~	~~0.430~~	~~0.430~~
	~~-Mass/15.0≤HC~~	~~0.360~~	~~0.650~~	~~0.690~~	~~0.650~~	~~0.410~~
	~~-Other~~	~~0.102~~	~~0.110~~	~~0.110~~	~~0.102~~	~~0.102~~

~~Residential High-rise~~	~~R-value~~	~~19~~	~~11~~	~~11~~	~~13~~	~~13~~
	~~U-factor~~					
	~~-Wood frame~~	~~0.074~~	~~0.110~~	~~0.110~~	~~0.102~~	~~0.102~~
	~~-Metal frame~~	~~0.183~~	~~0.224~~	~~0.224~~	~~0.217~~	~~0.217~~
	~~-Metal building~~	~~0.061~~	~~0.123~~	~~0.123~~	~~0.113~~	~~0.113~~
	~~-Mass/7.0≤ HC<15.0~~	~~0.330~~	~~0.430~~	~~0.430~~	~~0.430~~	~~0.430~~
	~~-Mass/15.0≤HC~~	~~0.360~~	~~0.650~~	~~0.690~~	~~0.650~~	~~0.410~~
	~~-Other~~	~~0.074~~	~~0.110~~	~~0.110~~	~~0.102~~	~~0.102~~
~~Public School Buildings~~	~~R-value~~	~~13~~	~~13~~	~~13~~	~~13~~	~~13~~
	~~U-factor~~					
	~~-Wood frame~~	~~0.102~~	~~0.102~~	~~0.102~~	~~0.102~~	~~0.102~~
	~~-Metal frame~~	~~0.261~~	~~0.261~~	~~0.261~~	~~0.261~~	~~0.261~~
	~~-Metal building~~	~~0.061~~	~~0.061~~	~~0.061~~	~~0.061~~	~~0.061~~
	~~-Mass/7.0≤ HC<15.0~~	~~0.330~~	~~0.330~~	~~0.330~~	~~0.330~~	~~0.330~~
	~~-Other~~	~~0.102~~	~~0.102~~	~~0.102~~	~~0.102~~	~~0.102~~

The U-factor criteria for walls depend on the class of construction. U-factors used for compliance must be selected from ~~Joint Appendix IV~~Reference Joint Appendix JA4. There are six classes of wall constructions: wood frame, metal frame, metal building walls, medium mass, high mass, and other (Figure 3-13). The "other" category is used for any wall type that does not fit into one of the other five wall classes. The following bullets give more information.

- **Wood-framed walls.** As defined by the ~~I~~2007 California ~~nternational~~ Building Code, Type IV buildings typically have wood-framed walls. Framing members typically consist of 2x4 or 2x6 framing members spaced at 24 in. or 16 in. OC. Composite framing members and engineered wood products also qualify as wood-framed walls if the framing members are non-metallic. Structurally insulated panels (SIPS) are another construction type that qualifies as wood framed. SIPS panels typically consist of rigid foam insulation sandwiched between two layers of oriented strand board (OSB). ~~Joint Appendix IV~~Reference Joint Appendix JA4, Table ~~IV.9~~4.3.1 has data for conventional wood-framed walls and Table ~~IV.10~~4.3.2 has data for SIPS panels.
- **Metal-framed walls.** Many nonresidential buildings and high-rise residential buildings require non-combustible construction, and this is achieved with metal-framed walls. Often metal-framed walls are not structural and are used as infill panels in rigid framed steel or concrete buildings. ~~The U-factor criteria are higher for metal-framed walls~~ Batt insulation is less effective for metal-framed walls (compared to wood-framed walls) because the metal framing members are more conductive. In most cases, continuous insulation is required to meet prescriptive U-factor requirements. From ~~Joint Appendix IV~~Reference Joint Appendix JA4, Table ~~IV.11~~4.3.3 has data for metal-framed walls.
- **Metal building walls.** Metal building walls consist of a metal building skin that is directly attached to metal framing members. The framing members are typically positioned in a horizontal direction and spaced

at about 4 ft. A typical method of insulating metal buildings walls is to drape the insulation over the horizontal framing members and to compress the insulation when the metal exterior panel is installed. Table ~~IV.16~~4.3.9 from ~~Joint Appendix IV~~Reference Joint Appendix JA4 has data for metal building walls.

- **Low mass walls.** Low mass walls have a heat capacity (HC) greater or equal to 7.0 but less than 15.0 Btu/ºF-ft². See the definition below for heat capacity. From ~~Joint Appendix IV~~Reference Joint Appendix JA4, Tables ~~IV.12~~4.3.5 and ~~IV.13~~ 4.3.6 have U-factor, C-factor, and heat capacity data for hollow unit masonry walls, solid unit masonry and concrete walls, and concrete sandwich panels.
- **High mass walls** have an HC equal to or greater than 15.0 Btu/ºF-ft². See ~~Joint Appendix IV~~Reference Joint Appendix JA4 for HC data on mass walls.
- **Spandrel panels and glass curtain walls**. See ~~Joint Appendix IV~~Reference Joint Appendix JA4, Table ~~IV.15~~4.3.8 for U-factor data.

The heat capacity is the amount of heat required to raise the temperature of the material by one degree F. By storing heat, materials with a high heat capacity, or thermal mass, have a tendency to dampen temperature swings throughout the day. For this reason, U-factor criteria are less stringent for mass walls than for framed construction.

Continuous Insulation

For some climate zones mass walls require continuous insulation to meet the U-factor requirements. When this is the case, the effect of the continuous insulation is estimated by equation 4-1 in Reference Joint Appendix JA4.

$U_{prop} = 1 / [(1/U_{col,A}) + R_{cont,insul}]$

Example 3-7

Question

An 8” (200 mm) medium-weight concrete block wall with uninsulated cores has 1” (25 mm) thick exterior polystyrene insulation with an R-value of R-5. What is the U-factor for this assembly?

Answer

From Table 4.3.5, the U-factor for the block wall is 0.53. From Equation 4-1, the U-factor is calculated as:

$U= 1 / [((1/0.53) + 5])$ = 0.145

Framed or block walls can also have insulation installed between interior or exterior furring strips. The effective continuous R-value of the furring/insulation layer is shown in Table 4.3.13 of Reference Joint Appendix JA4.

Wood frame (Table 4.3.1- U-factors of Wood Framed Walls)

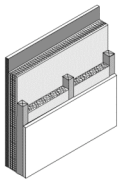

Concrete (Table 4.3.6 - Properties of Solid Unit Masonry and Solid Concrete Walls)

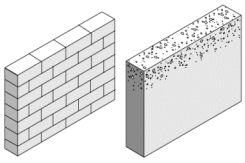

SIPS (Table 4.3.2 - U-factors of Structurally Insulated Wall Panels (SIPS)

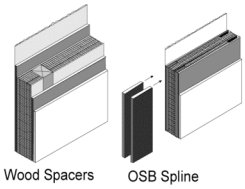

Conctrete sandwich panel (Table 4.3.7 - Properties of Concrete Sandwich Panels)

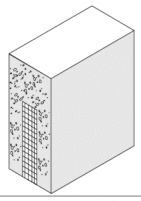

Metal frame (Table 4.3.3 - U-factors of Metal Framed Walls)

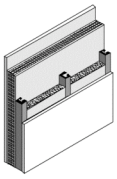

Spandrel panel (Table 4.3.8 - U-factors for Spandrel Panels and Glass Curtain Walls)

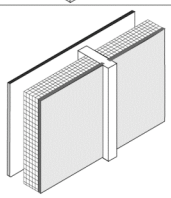

Masonry (Table 4.3.5 - Properties of Hollow Unit Masonry Walls)

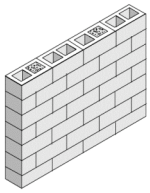

Metal walls (Table 4.3.9 U-factors for Metal Building Walls)

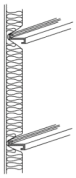

Source: Reference Appendices JA4.3

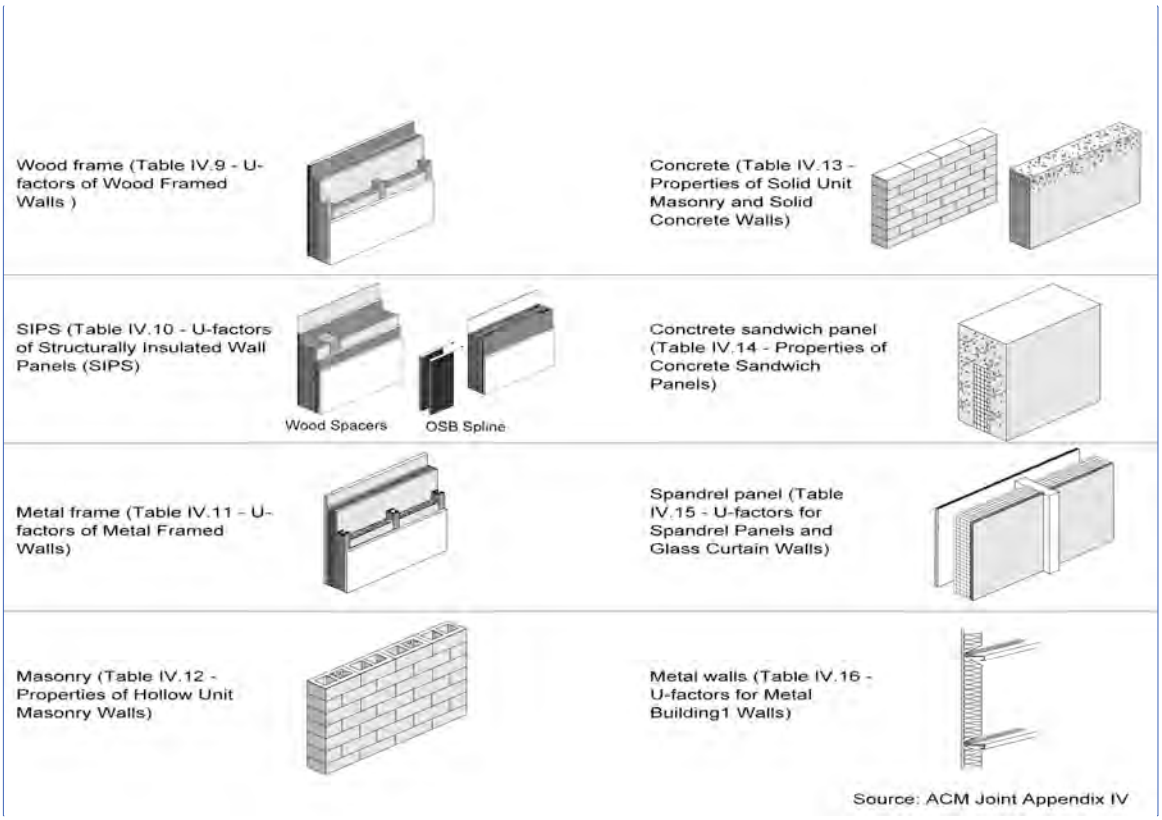

Figure 3-14 – Classes of Wall Constructions.

Demising Walls

§143(a)3 and §143(a)5

Demising walls, separating conditioned space from enclosed unconditioned space, must be insulated with a minimum of R-13 insulation if the wall is a framed assembly. If it is not a framed assembly, then no insulation is required. This applies only to the opaque portion of the wall.

The rationale for insulating demising walls is that the space on the other side may remain unconditioned indefinitely. For example, the first tenant in a warehouse building cannot know whether the future neighbor will use the adjoining space as unheated warehouse space or as an office. This requirement assures at least some insulation in the wall.

Exterior Floors and Soffits

§143(a)4

Under the prescriptive requirements, exterior floors and insulated soffits must have an assembly U-factor equal to or lower than the U-factor criterion for nonresidential, high-rise residential buildings and relocatable public school buildings in Table 3-11below. The U-factor for exterior floors and soffits from Reference Joint Appendix JA4 shall be used to determine compliance with the maximum assembly U-factor requirements. The Standards no longer allow using the R-value of the cavity or continuous insulation to demonstrate

compliance with the insulation values of the Reference Joint Appendix JA4; only U-factors may be used to demonstrate compliance. For metal framed floors, batt insulation between framing section may need continuous insulation to be modeled and installed on the interior or exterior to meet the U-factor requirements of the Standards.

~~Exterior floors and insulated soffits can meet the prescriptive requirements by either installing the required R-value of insulation or using a construction that meets the U-factor criteria (Table 3-4Table 3-12). The R-value alternative may be used for either metal-frame or wood-frame construction.~~

~~For nonresidential buildings, R-19 is required for floor insulation for wood-framed floors in the cold regions north coast (zones 1 and 16) and R-11 is required in the other climate zonesthe central and south coasts (zones 3 through 10) and R-25 is required in the inland valleys, deserts and mountain climates.~~ The U-factor criteria depend on whether the floor is a mass floor or not. A mass floor is one constructed of concrete and for which the HC is greater than or equal to 7.0 Btu/ºF-ft². ~~In the central and south coasts, no insulation is required for mass floors.~~

Table 3-1 – Floor/Soffit U-Factor Requirements
Summary from Standards Tables 143-A, ~~and~~ 143-B and 143-C

Building Type		1	2	3	4	5	6	7	8
Nonresidential	Mass	0.092	0.092	0.269	0.269	0.269	0.269	0.269	0.269
	Other	0.048	0.039	0.071	0.071	0.071	0.071	0.071	0.071
Residential High-rise	Mass	0.045	0.045	0.058	0.058	0.058	0.069	0.092	0.092
	Other	0.034	0.034	0.039	0.039	0.039	0.039	0.071	0.039
Relocatable Public School Buildings	Wood Framed and Other	0.048	0.048	0.048	0.048	0.048	0.048	0.048	0.048

Building Type		9	10	11	12	13	14	15	16
Nonresidential	Mass	0.269	0.269	0.092	0.092	0.092	0.092	0.092	0.058
	Other	0.071	0.071	0.039	0.071	0.071	0.039	0.039	0.039
Residential High-rise	Mass	0.092	0.069	0.058	0.058	0.058	0.045	0.058	0.037
	Other	0.039	0.039	0.039	0.039	0.039	0.034	0.039	0.034
Relocatable Public School Buildings	Wood Framed and other	0.048	0.048	0.048	0.048	0.048	0.048	0.048	0.048

~~Floor/Soffit~~		~~Climate Zones~~				
~~Space Type~~	~~Criterion~~	~~1,16~~	~~3-5~~	~~6-9~~	~~2,10-13~~	~~14, 15~~
~~Nonresidential~~	~~R-value or~~	~~19~~	~~11~~	~~11~~	~~11~~	~~11~~
	~~U-factor~~					
	~~-Mass/7.0≤HC~~	~~0.090~~	~~0.139~~	~~0.139~~	~~0.090~~	~~0.139~~
	~~-Other~~	~~0.048~~	~~0.071~~	~~0.071~~	~~0.071~~	~~0.071~~
~~Residential High-rise~~	~~R-value~~	~~19~~	~~11~~	~~11~~	~~11~~	~~11~~
	~~U-factor~~					
	~~-Mass/7.0≤HC~~	~~0.090~~	~~0.139~~	~~0.139~~	~~0.090~~	~~0.090~~
	~~-Other~~	~~0.048~~	~~0.071~~	~~0.071~~	~~0.071~~	~~0.071~~
	~~Raised concrete R-value~~	~~8~~	~~*~~	~~*~~	~~*~~	~~*~~
~~Relocatable Public School Buildings~~	~~R-value~~	~~19~~	~~19~~	~~19~~	~~19~~	~~19~~
	~~U-factor~~	~~0.048~~	~~0.048~~	~~0.048~~	~~0.048~~	~~0.048~~
	~~-Wood-frame~~	~~0.107~~	~~0.107~~	~~0.107~~	~~0.107~~	~~0.107~~
	~~-Metal-frame~~	~~0.261~~	~~0.261~~	~~0.261~~	~~0.261~~	~~0.261~~
	~~-Metal Building~~	~~0.061~~	~~0.061~~	~~0.061~~	~~0.061~~	~~0.061~~
	~~-Mass/7.0≤HC~~	~~0.330~~	~~0.330~~	~~0.330~~	~~0.330~~	~~0.330~~
	~~-Other~~	~~0.102~~	~~0.102~~	~~0.102~~	~~0.102~~	~~0.102~~
~~*Required insulation levels for concrete raised floors are R-8 in Climate Zones 2, 11, 13, and 14; R-4 in Climate Zones 12 and 15, and none in Climate Zones 3 through 10.~~						

~~For high-rise residential buildings and hotel/motel guest rooms, R-19 30 floor insulation is required for the cold regions (zones 1 and 16) and R-11 25 is required in the most other climate zones. For public school buildings, R-19 is required in all climate zones.~~

The U-factor criteria for concrete raised floors depend on whether the floor is a mass floor or not. A mass floor is one constructed of concrete and for which the heat capacity is greater than or equal to 7.0 Btu/ºF-ft².

Insulation levels for nonresidential ~~and high-rise residential~~ concrete raised floors with HC ≥ 7.0 using U-factor for compliance from ~~Joint Appendix IV~~Reference Joint Appendix JA4, Table 4 ~~IV~~.25.4.6, are equivalent to no insulation in climate zones 3-10 and associated U-factors to ~~R-8~~ continuous insulation of R-8 in climate zones 1, 2, ~~10 through 13~~11 through 15~~, and 16~~; and R-~~4~~ 15 in climate zone~~s 3 through 9, 14 and 15~~ 16. ~~The performance method of compliance for high-rise residential concrete raised floors is based on the U-factors in Standards Table 143-B.~~

To determine the U-factor i~~I~~nsulation levels for high-rise residential concrete raised floors, use the U-factors that are associated with ~~using R-value for compliance are of~~ R-8 continuous insulation ~~underneath~~ in climate zones ~~1, 2, 11, 13, and~~7 through 9 ~~14~~; and R-~~4~~ 15 in climate zones~~s~~ ~~12~~ 3-5 and 11-13~~and 15~~, with ~~no insulation required in Climate zones 3 through 10~~additional insulation required in the desert and mountain climate zones 1, 2, 14 and 16.~~.~~

Table ~~IV.25~~4.4.6 from ~~Joint Appendix IV~~Reference Joint Appendix JA4 is used with mass floors while Tables ~~IV.20~~4.4.1 through ~~IV.24~~4.4.5 are used for non-mass floors. See also Figure 3-15.

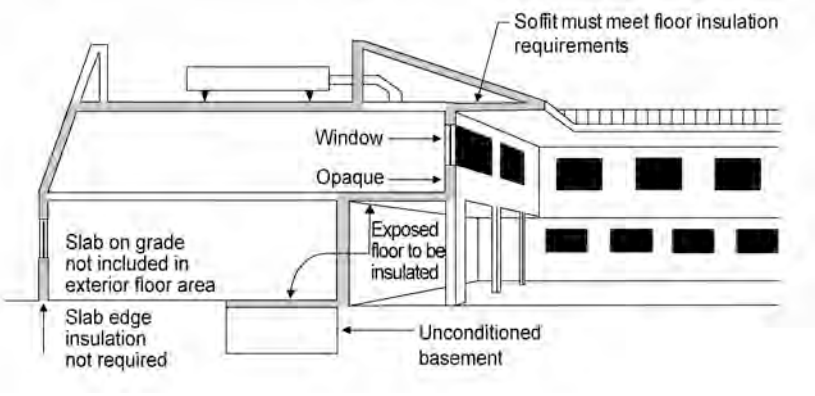

Figure 3-15– Requirements for Floor/Soffit Surfaces

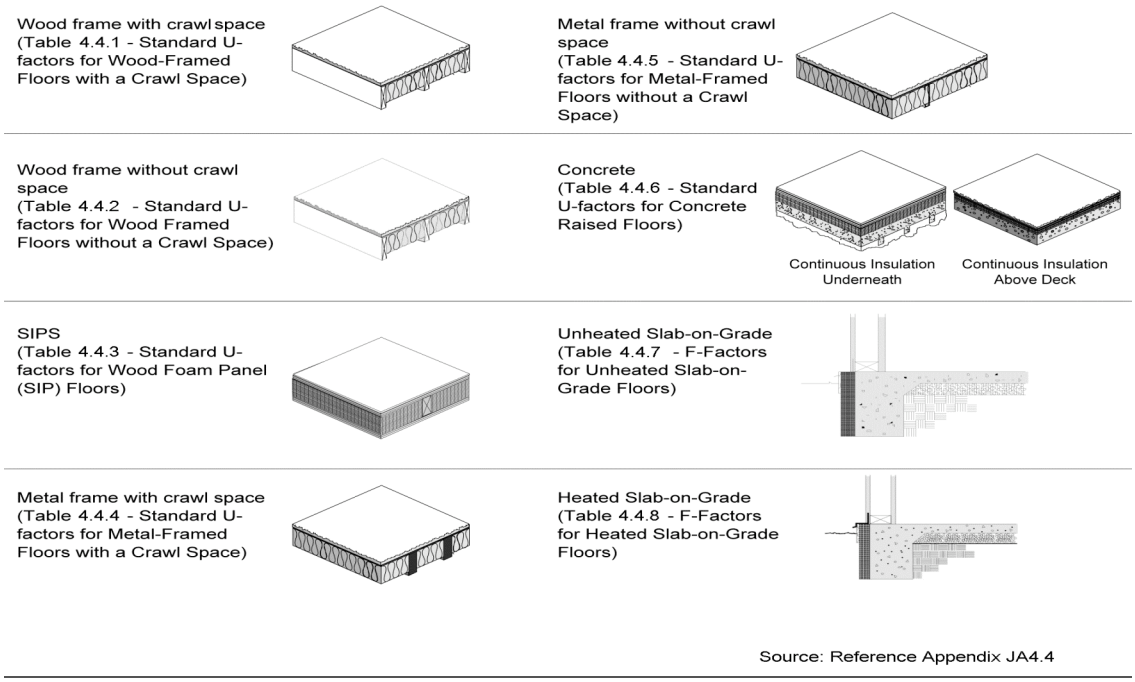

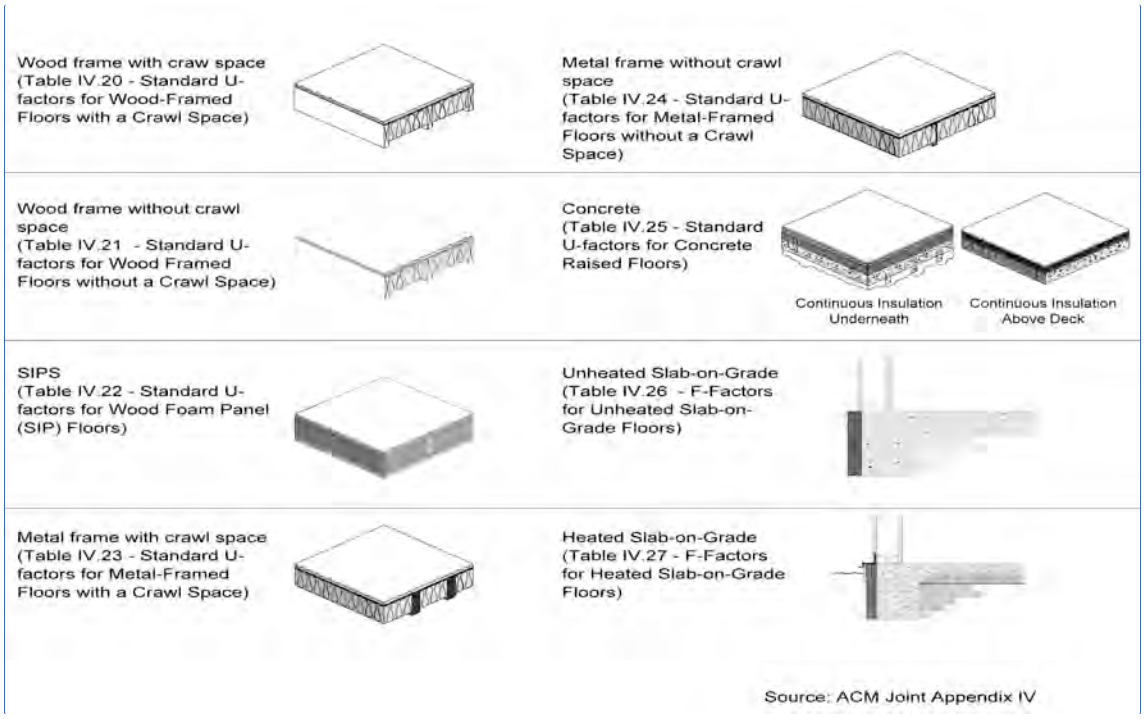

Figure 3-16 – Classes of Floor Constructions.

Exterior Doors

§143(a)7

~~There are no prescriptive requirements for exterior doors.~~ The 2008 Title 24, Building Energy Efficiency Standards provide new prescriptive requirements for

exterior doors. The Standards establish U-factor requirements for swinging and non-swinging doors. A maximum U-factor of 0.70 is allowed for swinging doors. For non-swinging doors the criteria depends on the climate zone as shown in the table below.

~~Glazing in doors, however, must be included in all fenestration calculations.~~ When glazing area exceeds one-half of the ~~area~~ entire~~of the~~ door area, it is then defined as a ~~window~~ fenestration product in the Standards, and the entire door area is modeled as a fenestration unit. If the glazing area is less than half the door area, the glazing ~~can~~ must be modeled as the glass area plus 2 inches in each direction of the opaque door surface (to account for a frame). However, exterior doors are a part of the gross exterior wall area and must be considered when calculating the window-wall-ratio.

Table 3-12 from ~~Joint Appendix IV~~Reference Joint Appendix JA4 has U-factors for exterior doors.

Table 3-12 – Door Requirements Summary from Standards Tables 143-A and 143-B

Building Type	Door Type	1	2	3	4	5	6	7	8
Nonresidential	Non-swinging	0.50	1.45	1.45	1.45	1.45	1.45	1.45	1.45
	Swinging	0.70	0.70	0.70	0.70	0.70	0.70	0.70	0.70
Residential High-rise	Non-swinging	0.50	1.45	1.45	1.45	1.45	1.45	1.45	1.45
	Swinging	0.70	0.70	0.70	0.70	0.70	0.70	0.70	0.70
Relocatable Public School Buildings	Non-swinging	0.50	0.50	0.50	0.50	0.50	0.50	0.50	0.50
	Swinging	0.70	0.70	0.70	0.70	0.70	0.70	0.70	0.70

Building Type		9	10	11	12	13	14	15	16
Nonresidential	Non-swinging	1.45	1.45	1.45	1.45	1.45	1.45	1.45	0.50
	Swinging	0.70	0.70	0.70	0.70	0.70	0.70	0.70	0.70
Residential High-rise	Non-swinging	1.45	1.45	1.45	1.45	1.45	1.45	1.45	0.50
	Swinging	0.70	0.70	0.70	0.70	0.70	0.70	0.70	0.70
Relocatable Public School Buildings	Non-swinging	0.50	0.50	0.50	0.50	0.50	0.50	0.50	0.50
	Swinging	0.70	0.70	0.70	0.70	0.70	0.70	0.70	0.70

Additions and Alterations

§149

In general, additions and alterations to the building envelope must meet the prescriptive insulation requirements in §-149 of the Standards, or comply with the performance compliance approach. Note that §149(b)2 lists prescriptive requirements for alterations; this means that the altered component must have a U-factor within limits defined in Tables 143-A and 143-B of the Standards; additions to an existing building must comply with insulation requirements of §149(a).

Roofing Alterations

§149(b)1B

For reroofing, when low-sloped roofs are exposed to the roof deck, the exposed area must be insulated to levels specified in Table 149-A. For nonresidential buildings this level is R-8 continuous insulation in climate zones 1 and 3 through 9 and R-14 continuous insulation in climate zones 2 and 10 through 16. Several exceptions are provided:

1. No additional insulation is required if the roof is already insulated to a minimum level of R-7.
2. If mechanical equipment is located on the roof and it will not be disconnected as part of the roof replacement, insulation added may be limited to the maximum insulation thickness that will allow a height of 8 inches (200 mm) from the roof membrane surface to the top of the base flashing.
3. If adding the required insulation will reduce the base flashing height to less than 8 inches (200 mm) at penthouse or parapet walls, the insulation added may be limited to the maximum insulation thickness that will allow a height of 8 inches (200 mm) from the roof membrane surface to the top of the base flashing.
4. Tapered insulation may be used which has a thermal resistance less than that prescribed in Table 149-A at the drains and other low points, provided that the insulation thickness is increased at high points, so that the average thermal resistance equals or exceeds the level specified in Table 149-A.

Refer to S~~s~~ection, 3.4 Cool Roofs, to learn what roofing product requirements apply to additions and alterations.

3.4 Roofing Products and Cool Roofs

Projects complying with the prescriptive approach~~All roofing products~~ must meet the ~~mandatory requirements of §10-113 and §118(i), and the prescriptive~~ requirements of §143(a)1 for roofing products (cool roof). All c for which compliance credit is taken, regardless of compliance approach, must meet the requirements of ~~§10-113 and~~ §118(i). ~~Roofing products~~Cool roofs with high solar reflectance and thermal emittance are referred to as ~~The term~~ "cool roof", which ~~-~~refers to an outer layer or exterior surface of a roof. ~~that has high solar reflectance and high emittance and reduces heat gain into a building.~~ As the term implies, the temperature of a cool roof is lower on hot sunny days than for a conventional roof, reducing cooling loads and the energy required to provide air conditioning.

The benefit of a high reflectance is obvious: while dark surfaces absorb the sun's energy (visible light, invisible infrared. and ultraviolet radiation) and become hot, light-colored surfaces reflect solar energy and stay cooler. However, high emittance is also important. Thermal Emittance refers to the ability of heat to escape from a surface once it is absorbed. Surfaces with low

emittance (usually shiny metallic surfaces) contribute to the transmission of heat into the roof components under the roof surface~~,~~. The heat can increase the building's air conditioning load, resulting in increased air conditioning load and less comfort for the occupants. ~~while~~ High-emitting roof surfaces give off absorbed heat relatively quickly through the path of least resistance- upward (and out of the building). ~~surfaces with high emittance allow heat to escape through radiation to the sky.~~

There ~~are~~are several ways to achieve the thermal emittance and solar reflectance required under the prescriptive approach. ~~several ways to achieve the high emittance required to qualify as a cool roof.~~ One ~~of the best~~ method~~s~~ is to use a single ply roofing membrane with high emittance properties as an integral part of the material. Another approach is to apply a coating to the surface of a conventional roof membrane for example,~~such as~~ modified bitumen or a mineral cap sheet. Metal roofs ~~can qualify as cool roofs by~~ using an industrial grade coating may have ~~that has~~ high reflectance and high emittance.

~~Solar Reflectance Index (SRI) is a new concept with in the 2008 Standards. The temperature of a surface depends on the surface's reflectance and emittance, as well as solar radiation. The SRI measures the relative steady-state surface temperature of a surface with respect to the standard white (SRI=100) and standard black (SRI=0) under the standard solar and ambient condition. A calculator was produced by the staff at Lawrence Berkeley National Laboratory which calculates the SRI by designating the Solar Reflectance and Thermal emittance of the desired roofing material. The calculator can be found at…….. SRI calculations shall be based on moderate wind velocity of 2-6 meters per second. To calculate the SRI the 3-year aged value of the roofing product must be used. By using the SRI calculator a cool roof may comply with an emittance lower than 0. as long as the aged reflectance is higher.~~

Mandatory Measures

The mandatory measures require that ~~cool roofs~~~~energy efficient~~ roofing products be tested and labeled by the Cool Roof Rating Council (CRRC) and that liquid applied products meet minimum standards for performance and durability per standard §118(i)4.. Note that installing cool roofs is *not* a mandatory measure. To receive compliance credit, roofing product's reflectance and thermal emittance must be tested and certified according to CRRC procedures. If a CRRC rating is not obtained for roofing products, default values for reflectance and emittance must be used.

Rating and Labeling

§10-113

When cool roof~~s~~ is installed to meet the prescriptive requirement or are used for compliance credit, the products ~~they~~ must be tested and labeled by the Cool Roof Rating Council (CRRC) as specified in §10-113.~~.~~ The CRRC is the supervisory entity responsible for certifying cool roof products. The CRRC test

procedure is documented in CRRC-1, the CRRC Product Rating Program Manual. This test procedure includes tests for both solar reflectance and thermal emittance.

Figure 3-17 provides an example of an approved CRRC product label. ~~The minimum label size and font size of the CRRC label are shown below (Figure 3-16). Please note that the CRRC label (an example of which is shown below) may only be used in accordance with CRRC program guidelines.~~

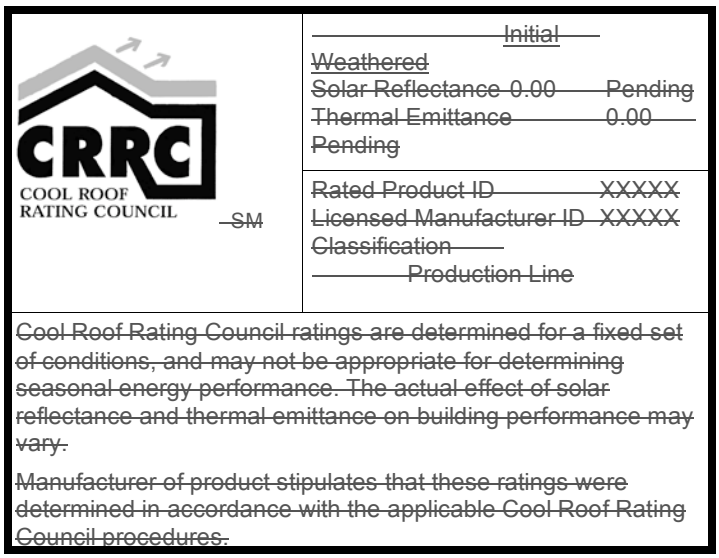

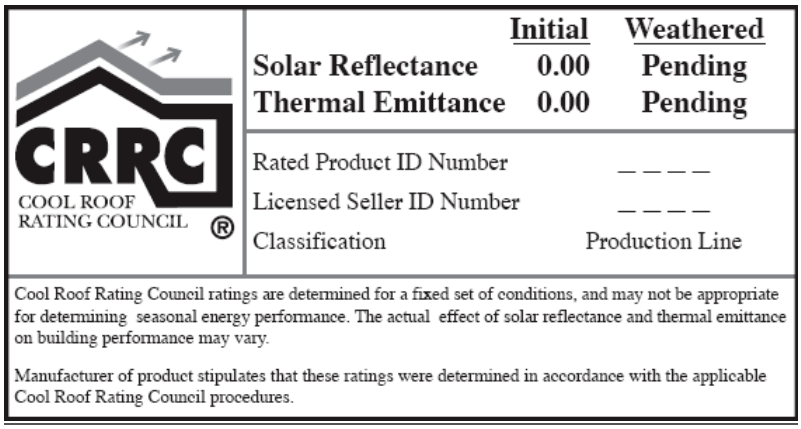

Figure 3-17 Sample CRRC Product label and information

~~*Figure* **Error! No text of specified style in document.** *16 – Sample CRRC Label*~~

Solar Reflectance, Thermal Emittance, and Solar Reflectance Index (SRI)

§118(i)1,2, and 3

To demonstrate compliance with the Standards, all roofing products must be certified and labeled according to CRRC procedures. The CRRC certification includes solar reflectance and thermal emittance. There are two kinds of solar reflectance:

a) Initial solar reflectance, and

b) 3-year aged reflectance.

All Standards requirements are based on the 3-year aged reflectance. However, if the aged value for the reflectance is not available in the CRRC's Rated Product Directory then the equation bellow (equation ???) can be used until the aged rated value for the reflectance is posted in the directory.

Aged Reflectance$_{calculated}$=(0.2+0.7[□$_{initial}$ – 0.2]) —EQUATION ???

Where □$_{initial}$ = Initial Reflectance listed in the CRRC Rated Product Directory.

The Standards do not distinguish between initial and aged thermal emittance, meaning that either value can be used to demonstrate compliance with the standards. If a manufacturer fails to obtain CRRC certificate for their roofing products, the following default aged solar reflectance and thermal emittance values must be used for compliance:

A. For asphalt shingles, 0.08/0.75

B. For all other roofing products, 0.10/0.75

Solar Reflectance Index (SRI) is a new concept in the 2008 Standards. The temperature of a surface depends on the incident solar radiation, surface's reflectance, and emittance. The SRI measures the relative steady-state surface temperature of a surface with respect to standard white (SRI=100) and standard black (SRI=0) under the standard solar and ambient condition. A calculator has been produced by the staff at Lawrence Berkeley National Laboratory which calculates the SRI by designating the Solar Reflectance and Thermal emittance of the desired roofing material. The calculator can be found at……. SRI calculations must be based on moderate wind velocity of 2-6 meters per second. To calculate the SRI the 3-year aged value of the roofing product must be used. By using the SRI calculator a cool roof may comply with an emittance lower than 0.85 as long as the aged reflectance is higher and visa versa.

Performance Requirements for Field Applied Liquid Coatings

§118(i)~~3~~4, Table 118-~~C~~B

There are a number of qualifying liquid products, including elastomeric coatings and white acrylic coatings. The Standards specify minimum performance and durability requirements for field applied liquid coatings. Please note that these requirements do not apply to industrial coatings that are factory-applied, such as metal roof panels. The requirements address elongation, tensile strength, permeance, and accelerated weathering. The requirements depend on the type of coating and are described in greater detail below:

Aluminum-Pigmented Asphalt Roof Coatings

Aluminum-pigmented coatings are silver-colored coatings that are commonly applied to modified bitumen and other roofing products. The coating has aluminum pigments that float to the top surface of the coating while it is setting, providing a shiny and reflective surface. Because of the shiny surface and the physical properties of aluminum, these coatings have a~~n~~ thermal emittance below 0.75, which is the minimum rating for prescriptive compliance. The overall envelope TDV energy approach is typically used to achieve compliance with these coatings.

This class of field-applied liquid coatings ~~must~~ shall be applied across the entire surface of the roof and meet the dry mil thickness or coverage recommended by the coating manufacturer taking in consideration the substrate on which the coating will be applied on. Also, the Aluminum-pigmented asphalt roof coatings shall be manufactured in accordance with ASTM D2824[2] Standard Specification for Aluminum-Pigmented Asphalt Roof Coatings, Nonfibered, Asbestos Fibered, and Fibered without Asbestos that is suitable for application to roofing or masonry surfaces by brush or spray.~~,~~ ~~o~~Or ASTM D6848, Standard Specification for Aluminum Pigmented Emulsified Asphalt ~~Used~~ used as a Protective Coating for Roofing, and installed in accordance with ASTM D3805[3], Standard Guide for Application of Aluminum-Pigmented Asphalt Roof Coatings. ~~ASTM D2824, Standard Specification for Aluminum-Pigmented Asphalt Roof Coatings, Nonfibered, Asbestos Fibered, and Fibered without Asbestos, covers asphalt-based aluminum roof coatings suitable for application to roofing or masonry surfaces by brush or spray.~~

Cement-Based Roof Coatings

---

[2] 1.1 This specification covers asphalt-based, aluminum roof coatings suitable for application to roofing or masonry surfaces by brush or spray.

1.2 The values stated in SI units are to be regarded as the standard. The values in parentheses are for information only.

1.3 The following precautionary caveat pertains only to the test method portion, Section 8, of this specification: This standard does not purport to address all of the safety concerns, if any, associated with its use. It is the responsibility of the user of this standard to establish appropriate safety and health practices and determine the applicability of regulatory limitations prior to use.

[3] 1.1 This guide covers the application methods for Specification D 2824 Aluminum-Pigmented Asphalt Roof Coatings, Non-Fibered (Type I), Asbestos Fibered (Type II), and Fibered without Asbestos (Type III), for application on asphalt built-up roof membranes, modified bitumen roof membranes, bituminous base flashings, concrete surfaces, metal surfaces, emulsion coatings, and solvent-based coatings. This guide does not apply to the selection of a specific aluminum-pigmented asphalt roof coating type for use on specific projects.

1.2 The values stated in SI units are to be regarded as the standard. The values given in parentheses are for information only.

1.3 This standard does not purport to address all of the safety concerns, if any, associated with its use. It is the responsibility of the user of this standard to establish appropriate safety and health practices and determine the applicability of regulatory limitations prior to use. Specific precautionary statements are given in Section 4.

This class of coatings consists of a layer of cement and has been used for a number of years in the central valley of California and in other regions. These coatings may be applied to almost any type of roofing product.

Cement-based coatings ~~must~~ shall be applied across the entire roof surface to meet the dry mil thickness or coverage recommended by the manufacturer. Also, Cement-based coatings shall be manufactured to contain no less than 20% Portland C~~c~~ement and meet the requirements of ASTM D822[4],ASTM C1583 and ASTM D5870, ~~*Standard Practice for Filtered Open-Flame Carbon-Arc Exposures of Paint and Related Coatings*. When installed over a rock or gravel surface, the coating must be applied at a thickness of at least 200 dry mils (5 mm). The coatings must be applied at a minimum thickness of 30 mils (0.8 mm) when installed on a mineral cap sheet surface and 40 mils (1 mm) when installed over a metal surface~~.

Other Field-Applied Liquid Coatings

Other field-applied liquid coatings include elastomeric and acrylic based coatings. These coatings must be applied ~~with a minimum thickness of 20 dry mils (0.5 mm)~~ across the entire surface of the roof surface to meet the dry mil thickness or coverage recommended by the coating manufacturer taking in consideration the substrate on which the coating will be applied on. The field-applied liquid coatings ~~and~~must be tested to meet a number of performance and durability requirements as specified in Table 118-B~~C~~ of the Standards.

[4] 1.1 This guide is intended for the evaluation of clear and pigmented coatings designed for use on rigid or semirigid plastic substrates. Coated film and sheeting are not covered by this guide.

1.2 This standard does not purport to address all of the safety concerns, if any, associated with its use. It is the responsibility of the user of this standard to establish appropriate safety and health practices and determine the applicability of regulatory limitations prior to use.

3.4.1 Roofing Products Prescriptive Requirements

§143(a)1.A.

The prescriptive requirements call for a roofing products meeting the solar reflectance and thermal emittance cool roof in all both low-slope and steep-slope applications for nonresidential buildings. A low-slope roof is defined as a surface with a pitch less than or equal to 2:12 (9.5 degrees from the horizon), while a steep-slope roof is a surface with a pitch greater than 2:12 (9.5 degrees from the horizon). The requirements do not apply to residential buildings or to hotel/motel guest rooms. The prescriptive requirements for cool roofs under the new 2008 Standards are now climate zone dependent and the aged solar reflectance and thermal emittance criteria depend on the type of roofing material being used.

A qualifying cool roofroofing product must have an initial aged solar reflectance of 0.70 or greater and an initial thermal emittance of 0.75 or greater than or equal to thatthat the values providedindicated in Table 3-13_ for the nonresidential buildings including relocatable public school buildings where manufacturer certifies use only specific climate zones; Table ?-?B for high-rise residential buildings and Hotel/Motel guest rooms including high-rise residential buildings and guest rooms of Hotel/motel buildings ___.

Table 3-13 A Prescriptive Criteria For Roofing Product For Nonresidential Buildings

			Climate Zones															
			1	2	3	4	5	6	7	8	9	10	11	12	13	14	15	16
Roofing Products	Low-sloped	Aged Reflectance	NR	0.55	0.55	0.55	0.55	0.55	0.55	0.55	0.55	0.55	0.55	0.55	0.55	0.55	0.55	NR
		Emittance	NR	0.75	0.75	0.75	0.75	0.75	0.75	0.75	0.75	0.75	0.75	0.75	0.75	0.75	0.75	NR
		SRI	NR	64	64	64	64	64	64	64	64	64	64	64	64	64	64	NR
	Steep Sloped (less than 5 lb/ft²)	Aged Reflectance	NR	0.20	0.20	0.20	0.20	0.20	0.20	0.20	0.20	0.20	0.20	0.20	0.20	0.20	0.20	0.20
		Emittance	NR	0.75	0.75	0.75	0.75	0.75	0.75	0.75	0.75	0.75	0.75	0.75	0.75	0.75	0.75	0.75
		SRI	NR	16	16	16	16	16	16	16	16	16	16	16	16	16	16	16
	Steep Sloped (5 lb/ft² or more)	Aged Reflectance	0.15	0.15	0.15	0.15	0.15	0.15	0.15	0.15	0.15	0.15	0.15	0.15	0.15	0.15	0.15	0.15
		Emittance	0.75	0.75	0.75	0.75	0.75	0.75	0.75	0.75	0.75	0.75	0.75	0.75	0.75	0.75	0.75	0.75
		SRI	10	10	10	10	10	10	10	10	10	10	10	10	10	10	10	10

Table 3-14 B PRESCRIPTIVE CRITERIA FOR ROOFING PRODUCTS FOR HIGH-RISE RESIDENTIAL BUILDINGS AND GUEST ROOMS OF HOTEL/MOTEL BUILDINGS

			Climate Zones															
			1	2	3	4	5	6	7	8	9	10	11	12	13	14	15	16
Roofing Products	Low-sloped	Aged Reflectance	NR	NR	NR	NR	NR	NR	NR	NR	NR	0.55	0.55	NR	0.55	0.55	0.55	NR
		Emittance	NR	NR	NR	NR	NR	NR	NR	NR	NR	0.75	0.75	NR	0.75	0.75	0.75	NR
		SRI	NR	NR	NR	NR	NR	NR	NR	NR	NR	64	64	NR	64	64	64	NR

Table 3-15 C PRESCRIPTIVE CRITERIA FOR ROOFING PRODUCT FOR RELOCATABLE PUBLIC SCHOOL BUILDINGS WHERE MANUFACTURER CERTIFIES USE IN ALL CLIMATE ZONES

Roofing Products –	Aged Reflectance/Emittance
Low-Sloped	0.55/0.75
SRI	64
Steep-Sloped – Less than 5 lb/ft^2	0.20/0.75
SRI	16
5 lb/ft^2 or more	0.15/0.75
SRI	10

~~However, If~~If the aged value for the Reflectance is not available in the CRRC's Rated Product Directory then the equation in Section 3.4.1 ~~bellow~~ can be used until the aged rated value for the reflectance is posted in the directory.

~~Aged Reflectance$_{calculated}$=(0.2+0.7[□$_{initial}$ – 0.2])~~

~~Where □$_{initial}$ = Initial Reflectance listed in the CRRC Rated Product Directory.~~

~~In the 2008 Standards t~~There are four exceptions to the minimum ~~for~~prescriptive requirements for solar reflectance and thermal emittance or the SRI:

1. Wood framed roof assemblies in climate zones 3 and 5 are exempt if the roof assembly has a U-factor of 0.039 or lower.

~~A.~~2. Metal framed roofs in climate zones 3 and 5 are also exempted if the roof assembly has a U-factor 0.048 or lower.

~~B.~~3. Roof area covered by building integrated photovoltaic panels and building integrated solar thermal panels is not required to meet the cool roof requirements.

4. If the roof construction has a thermal mass over the roof membrane with a weight of at least 25 lb/ft^2, it does not need to meet the above requirement.

~~the emittance may be lower and the reflectance higher such that equivalent performance is achieved. For lower emittance values, calculate the required reflectance as follows:~~

~~Reflectance = 0.70 + 0.34 * (0.75 – □initial)~~

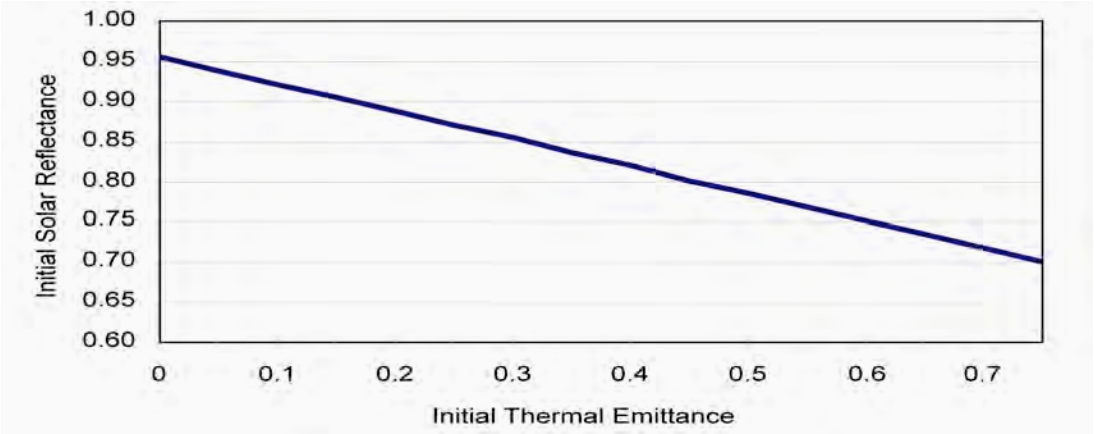

~~*Figure Error! No text of specified style in document.-17 – Tradeoffs between Cool Roof Reflectance and Emittance*~~

~~*A cool roof may comply with an emittance lower than 0.75 as long as the reflectance is higher. This graph shows the relationship.*~~

Example 3-8

Question

According to the provisions of the ~~2008~~85 ~~Title 24 Energy~~ Standards, are cool roofs optional or ~~mandatory~~ for nonresidential buildings or high-rise residential buildings?

Answer

The answer depends on the compliance approach you chose. For prescriptive compliance, compliance with solar reflectance and thermal emittance, or SRI is required where indicated in Tables 143-A, B, and C. ~~Energy efficient roofing products~~ ~~Cool roofs are optional;~~ In the performance approach, ~~however, they are~~reflectance and emittance values less than the minimum prescriptive requirements may be used; however, ~~included on the model buildings (also called the "standard buildings") that establish the energy budget for nonresidential buildings with low-sloped and steep-sloped roofs~~any deficit that results from this choice must be made up by improving other energy efficiency features in the building, which include envelope, mechanical, and lighting systems. ~~This means that cool roofs~~ roofing ~~are~~products ~~are required if the owner or developer uses the prescriptive envelope component method of compliance for a building with a low-sloped~~ or ~~a steep-sloped~~ roof. ~~Cool roofs are not required for the prescriptive approach for high-sloped roofs. There are compliance option credits for high-slope nonresidential roofs and roofs on other building types.~~

Example 3-9

Question

Must all roofing materials used in California, whether cool roof ~~cool materials~~ or not, be certified by the CRRC and labeled accordingly?

Answer

It depends on ~~if and how they are being used for energy~~the compliance approach you are using. If you are using the prescriptive envelope component approach, the answer is yes; the roof must be certified and labeled by CRRC for nonresidential ~~low-sloped~~ roofs. ~~However~~On the other hand, if you are using prescriptive overall envelope TDV energy approach or the performance approach, to receive compliance credit ~~using the prescriptive overall envelope TDV energy approach or the performance approach~~, you can either obtain a CRRC certification, OR use a default reflectance of 0.10 Note that using default values instead of CRRC certificates ~~will~~may result in a significant energy penalty that must be made up by increasing energy efficiency in other building features. ~~. That is~~~~So, the answer to the question is no~~ ~~NO~~ ~~if you use the default reflectance for a particular roofing material.~~ ~~(~~Also note that the~~The~~ default reflectance ~~is~~ ~~different~~ for asphalt roofs is different than ~~versus~~ ~~other~~ ~~than low-sloped~~tile and metal roofing products ~~nonresidential roofs~~; see Question 3-15.~~)~~

Example 3-10

Question

When re-roofing with gravel, must the roof meet reflectance and emittance ~~cool roof~~ requirements of the Standards? Is CRRC certification required?

Answer

Not necessarily. Roof recoverings allowed by the California Building Code do not have to meet the reflectance and emittance ~~cool roof~~ requirements, and a CRRC certification is not required, if ALL of the following are true:

1. The existing roof is a rock or gravel surface;
2. The new roof is a rock or gravel surface;
3. There is no removal of existing layers of roof coverings;
4. There is no recoating with a liquid-applied coating; and
5. There is no installation of recover board, rigid insulation, or other substrate.

Example 3-11

Question

~~I~~Why is there a different requirement in the different climate zones for the aged solar reflectance and SRI requirements between roofing products with density less than 5 lb/ft^2 versus roofing products and density of 5 lb/ft^2 or more? ~~n reroofing, is existing roofing that is a rock or gravel surface equivalent to a gravel roof over an existing cap sheet and therefore may it qualify for the exception discussed in the previous question?~~

Answer

Roofing products with less density perform differently compared to the higher density materials which have a tendency to retain some gained heat. For this reason the performance characteristics of the two different densities were evaluated separately for each climate zone. ~~No, the two roofs are not equivalent and therefore the gravel roof over existing cap sheet may not qualify for the exception.~~

Example 3-12

Question

~~Do the Title 24 Energy Standards address high-slope residential roofs? In other words, do shingles need to be certified to meet emittance of 0.30? What about high-slope apartment complexes that are residential but not single family homes?~~How do I know if my roofing material is weighs less than 5 lb/ft^2?

Answer

Roofing products which are less than 5 lb/ft^2 are usually asphalt shingles and Aluminum roofing products. Products that weigh 5 lb/ft^2 or more are usually concrete and clay tile, slate and some metal roofing products. Check the product literature or contact the roofing product manufacturer to obtain the weight of the desired roofing product. ~~you arerequirementisThe Standards offer compliance credits for these other roofs. The same reflectance, emittance and coating performance requirements apply for these other roofs if they are to receive credit. Roofing materials such as asphalt shingles need to be CRRC certified to meet required emittance and reflectance levels. Note that clay or cement roofing tiles have to meet a reflectance of only 0.40 to gain compliance credit for high-sloped roofs on low-rise residential buildings.~~

Example 3-13

Question

Can I use solar reflectance and thermal emittance data generated by any nationally recognized and well-respected laboratory in lieu of CRRC ratings? Can in-house testing by the manufacturer be used to qualify my product?

Answer

Only CRRC ratings from the product directory list can be used to establish cool roof product qualification in Title 24 compliance. The CRRC process requires use of a CRRC accredited laboratory under most circumstances, an "Accredited Independent Testing Laboratory (AITL) defined by the CRRC program. Any testing laboratory can become an AITL by following the CRRC accreditation process and satisfying the requirements. The roster of CRRC accredited laboratories is posted on the CRRC website (http://www.coolroofs.org).

Example 3-14

Question

The ~~Is~~ aged reflectance for the material I want to use for my roof is currently not available in the CRRC Rated Product Directory. Can I use the initial reflectance which is listed?~~a consideration in the cool roof requirements?~~

Answer

~~No~~Yes, but you have to use the equation 0.2+0.7[$\rho_{initial}$ – 0.2]) where ($\rho_{initial}$ = Initial Reflectance listed in the CRRC Rated Product Directory) to calculate the aged reflectance value until the aged value is available in the directory at some future time.

~~compliance is based strictly on initial reflectance~~.

Example 3-15

Question

Can the reflectance and emittance requirements of Energy Star Cool Roofs be substituted for the Title 24 Energy Standards requirements?

Answer

No. Only roofing products which are listed by the CRRC in there Rated Product Directory can be used to meet Title 24 Building Energy Efficiency Standards. CRRC currently is the only organization which have met the criteria set in§10-113 of Title 24 Building Energy Efficiency Standards. ~~At this time, Energy Star Cool Roofs have only reflectance requirements and no~~

~~emittance requirements, so Energy Star Cool Roofs do not automatically qualify as cool roofs under Title 24. Only cool roofs certified by CRRC qualify as cool roofs under Title 24 at this time.~~

Example 3-16

Question

Can I claim to have a cool roof, or can I get anything higher than a default reflectance, if my roof does not meet the field-applied coating performance requirements of Title 24 Energy Standards?

Answer

No, you cannot claim to have a cool roof and you cannot claim higher energy credits if your roof does not meet the coating performance requirements of Title 24 for field-applied coatings.

~~Example Error! No text of specified style in document. 16F~~

~~Question~~

~~Is the default reflectance for a non-CRRC certified/labeled roof or for one that doesn't meet the coating performance requirements different for nonresidential low-sloped roofs than for other roofs?~~

~~Answer~~

~~Yes, the default reflectance for nonresidential low-sloped roofs is 0.10 and for other roofs is 0.30.~~

~~Example **Error! No text of specified style in document.** 17~~

~~Question~~

~~Aren't cool roofs expensive?~~

~~Answer~~

~~Not necessarily. Our research shows that for low-sloped roofs, the cost of a cool roof compared to a non-cool roof can be the same (no difference in price) or slightly higher per square foot for the cool roof, depending on lots of particulars. For steep-sloped roofs, there could be a cost premium of of up to 30 cents per suare foot for cool roofs versus the non-cool roof product. Our analyses showed cool roofs to be cost-effective over the life cycle of the roofing material in all 16 of California's climate zones.~~

~~Example 3-17~~

~~Question~~

~~With a high reflective,and emissive roof (a cool roof), does a building lose the advantage of solar heat gain through the roof in the cold months? Will my heating bills increase?~~

~~Answer~~

~~In some months in some climate zones, the sun's heat could provide some heat gain into the building through a low-sloped roof. Taking that gain away with a cool roof still results in a net gain in comfort and energy bills over the course of a year, because the hot-weather benefits of reducing air conditioning needs generally outweigh (in some cases, GREATLY outweigh) the solar gain in winter. In some buildings with a cool roof, there may be a slight increase in the need for space heating in the colder months.~~

Example 3-~~18~~17

Question

How does a product get CRRC cool roof certification?

Answer

Any party wishing to have a product or products certified by CRRC should contact the CRRC to get started - call toll-free (866) 465-2523 from inside the US or (510) 482-4420, ext 215 or email info@coolroofs.org. CRRC staff will walk interested parties through the procedures. In addition, CRRC publishes the procedures in "CRRC-1 Program Manual," available for free on http://www.coolroofs.org or by calling the CRRC. However, working with CRRC staff is strongly recommended.

Example 3-~~19~~18

Question

I understand reflectance, but what is emittance?

Answer

Even a material that reflects the sun's energy will still absorb some of that energy as heat; there are no perfectly reflecting materials being used for roofing. That absorbed heat undergoes a physical change (an increase in wavelength, for readers who remember physics) and is given off – emitted – to the environment in varying amounts by various materials and surface types. This emittance is given a unitless value between 0 and 1, and this value represents a comparison (ratio) between what a given material or surface emits and what a perfect blackbody emitter (again, recall physics) would emit at the same temperature.

A higher emittance value means more energy is released from the material or surface; scientists refer to this emitted energy as thermal radiation (as compared to the energy from the sun, solar radiation, with shorter wavelength). Emittance is a measure of the relative efficiency with which a material, surface, or body can cool itself by radiation. Lower-emitting materials become relatively hotter for not being able to get rid of the energy, which is heat. Roof materials with low emittance therefore hold onto more solar energy as heat, get hotter than high-emittance roofs, and with help from the laws of physics, offer greater opportunity for that held heat to be given off downward into the building through conduction. More heat in the building increases the need for air conditioning for comfort. A cool roof system that reflects solar radiation (has high reflectance) and emits thermal radiation well (has high emittance) will result in a cooler roof and a cooler building with lower air-conditioning costs.

Example 3-~~20~~19

Question

Do alterations to the roof of an unconditioned building trigger cool roof requirements?

Answer

No, alterations to the roof of an unconditioned building do not trigger cool roof requirements. In general, the lighting requirements are the only requirements applicable for both newly constructed and altered unconditioned buildings; this includes §143(c), the skylight requirements. Building envelope (other than skylight requirements) and mechanical requirements do not apply to unconditioned buildings.

Example 3-20

Question

What happens if I have a low-slope roof on most of my buildings and steep-sloped roof on another portion, do I have to meet the two different criteria for the roofing products?

Answer

Yes. However, if your building is in climate zones 1 or 16 you would not be required to do the low-sloped reflective roof. However, you would have a requirement for the steep-slope roofs in climate zones 2-16 for low density steep-slope material and in all climate zones for high density steep-slope materials.

Example 3-21

Question

I am installing a garden roof (roofs whose top surface is composed of soil and plant) on top of an office building. Although garden roofs are not cool roofs by their reflectance properties, so will they be allowed under the 2008 standards?

Answer

Yes, the California Energy commission considers a garden roof as a roof with thermal mass on it.

Under exception 4 to §143(a)1Ai, if a garden roof has a dry unit weight of 25 lb/ft^2 then the garden roof is equivalent to cool roof.

3.5 Infiltration and Air Leakage

3.5.1 Fenestration and Doors

See in Section **Error! Reference source not found.**.

3.5.2 Joints and Openings

§117

All joints and other openings in the building envelope that are potential sources of air leakage must be caulked, gasketed, weather-stripped, or otherwise sealed to limit air leakage into or out of the building. This applies to penetrations for pipes and conduits, ducts, vents, and other openings. It means that all gaps between wall panels, around doors, and other construction joints must be well sealed. Ceiling joints, lighting fixtures, plumbing openings, doors, and windows should all be considered as potential sources of unnecessary energy loss due to infiltration.

No special construction requirements are necessary for suspended (T-bar) ceilings provided they meet the requirements of §118(e). See Section 3.3.1. Standard construction is adequate for meeting the infiltration/exfiltration requirements.

3.6 Relocatable Public School Buildings

Table 143-C
~~ACM Manual Appendix ND~~Reference Nonresidential Appendix NA4

Public school building design is defined by two prescriptive requirements, listed in Tables 143-A and 143-C of the Standards, covering climate-specific relocatable public school buildings as well as relocatable public school buildings that can be installed in any climate. Building envelopes must meet the prescriptive requirements in §143 and lighting power requirements in §146. For additional design requirements, refer to §143 and Reference Nonresidential Appendix NA4~~ ACM Manual Appendix ND~~. Manufacturers must certify compliance and provide documentation according to the chosen method of compliance. Performance compliance calculations must be performed for multiple orientations, each model using the same proposed design energy features rotated through 12 different orientations and different climate zones (Reference Nonresidential Appendix NA4~~ACM Manual Appendix ND~~). Also see §141(d)~~,~~and §149(b)2 NOTE. ~~, and Nonresidential ACM Manual Table N2-1 for public school buildings requirements.~~ Note that if prescriptive method is used for all climate zones compliance, then all the requirements of Table 143-C must be met; for climate zone specific prescriptive compliance, the relocatable classrooms must comply with the requirements of Table 143-A.

Performance Approach

§141(d) Performance

Reference Nonresidential Appendix NA4

Relocatable Public School Buildings. When the manufacturer/builder certifies a relocatable public school building for use in any climate zone, the building must be designed and built to meet the energy budget for the most severe climate zones as specified in the Nonresidential ACM Manual, assuming the prescriptive envelope criteria in TABLE 143-C. When the manufacturer/builder certifies that the relocatable building is manufactured for use in specific climate zones and that the relocatable building can not be lawfully used in other climate zones, the energy budget must be met for each climate zone that the manufacturer/building certifies, assuming the prescriptive envelope criteria in TABLE 143-A, including the non-north window RSHG and skylight SHGC requirements for each climate zone. The energy budget and the energy use of the proposed building must be determined using the multiple orientation approach specified in the Nonresidential ACM Manual. The manufacturer/builder shall meet the requirements for identification labels specified in ~~section~~ §143(a)8.

Manufacturers may certify the relocatable classrooms for multiple orientations or for compliance for all climate zones statewide. Since relocatable public school buildings could be positioned in any orientation, it is necessary to perform compliance calculations for multiple orientations. Each model with the same proposed design energy features shall be rotated through 12 different orientations either in climate zones 14, 15 and 16 for relocatables showing statewide compliance or in the specific climate zones that the manufacturer proposes for the relocatable to be allowed to be installed, i.e., the building with the same proposed design energy features is rotated in 30 degree increments and shall comply in each case. Approved compliance programs shall automate the rotation of the building and reporting of the compliance results to insure it is done correctly and uniformly and to avoid unnecessary documentation.

3.7 Overall Envelope TDV Energy Approach

§143(b)

The overall envelope TDV energy approach (overall envelope approach) offers greater design flexibility. It allows the designer to make trade-offs between many of the building envelope components. For example, if a designer finds it difficult to insulate the walls to a level adequate for meeting the wall component U-factor requirement, then the insulation level in a roof or floor or the performance of a window component could be increased to offset the under-insulated wall. The same holds true for glazing. If a designer wants to put clear, west-facing glass to enhance the display of merchandise in a show window, it would be possible to use lower SHGC glazing on the other orientations to make up for the increased SHGC on the west.

The overall envelope approach estimates the time dependent valued (TDV) energy associated with the building envelope, and in doing so, accounts for both

overall heat loss and overall heat gain. The TDV energy impact distributed to each building component (floor, wall, window, skylight, door or roof) is estimated using a weighting coefficient that is dependent on both the climate zone and occupancy type (nonresidential, high-rise residential, or retail) and orientation. The procedure also accounts for the effect of roof's solar reflectance and thermal emittance on TDV energy use.

A standard design value and a proposed design value are calculated for TDV energy use. The standard design building complies with the exact requirements of the prescriptive approach. The requirements are more stringent in more extreme climate zones than in mild climate zones. The standard values are compared to the proposed values calculated from the actual envelope design. If the proposed value does not exceed the standard value, then the overall building envelope requirements are met.

While the overall envelope approach increases design flexibility, this comes at the expense of the complexity of the calculations. There is an Envelope Tradeoff spreadsheet tool (see section 3.6.1) available on the California Energy Commission website which can perform this calculation. In addition, one or more state-approved energy compliance programs (see chapter 9) is capable of performing the Overall Envelope TDV energy calculation as well.

3.7.1 Overall Envelope TDV Energy Approach Overview

There are two parts to the Overall Envelope TDV energy approach calculation. The first is to calculate the standard TDV energy use; this becomes the standard that must be met. The second is to calculate the proposed TDV energy use, which is compared to the standard to show that it does not exceed the standard TDV energy budget.

The envelope tradeoff procedure has been revised with the 2008 Standards. Previously, heat loss and heat gain rates were calculated separately and compared to the standard design values. For the 2008 standards, the building Overall Envelope TDV energy Approach, which accounts for both heat loss and heat gain, is calculated. The TDV energy impact of each building envelope component (i.e., wall, roof, floor) is estimated by applying a weighting coefficient that is both climate and occupancy dependent. The weighting coefficients allow for tradeoffs between envelope components. Weighting coefficients are also developed to account for effects of window and skylight glazing, and roof solar reflectance and thermal emittance. The overall envelope tradeoff procedure is documented in Reference Nonresidential Appendix NA5.

A spreadsheet tool has been developed that calculates the TDV energy of the proposed and standard design buildings from user inputs. With this tool, the user selects the construction assembly from a drop-down list, and the tool automatically looks up the required U-factors and SHGCs for the standard design, looks up weighting coefficients and performs the calculations.

The U-factor for opaque building elements is determined by choosing a construction from the appropriate table in Reference Joint Appendices JA4. The U-factor, SHGC and visible transmittance (VT) for windows and skylights are taken from NFRC rating values or defaults from Table 116-A or 116-B of the Standards.

The following table below summarizes the information that is required for each envelope component.

Table 3-13 – Required Information for Building Envelope Components

	Floor	Wall	Window	Skylight	Door	Roof
Area, ft2	X	X	X	X	X	X
U-factor*	X	X	X	X	X	X
SHGC*			X	X		
VT*			X	X		
Orientation		X	X		X	
Projection Factor			X			
Reflectance						X
Emittance						X
Slope (Steep or low-sloped)						X

**These are automatically determined when the construction is selected.*

A sample tradeoff calculation worksheet is shown below. The fields highlighted in yellow are those which must be filled in by the user.

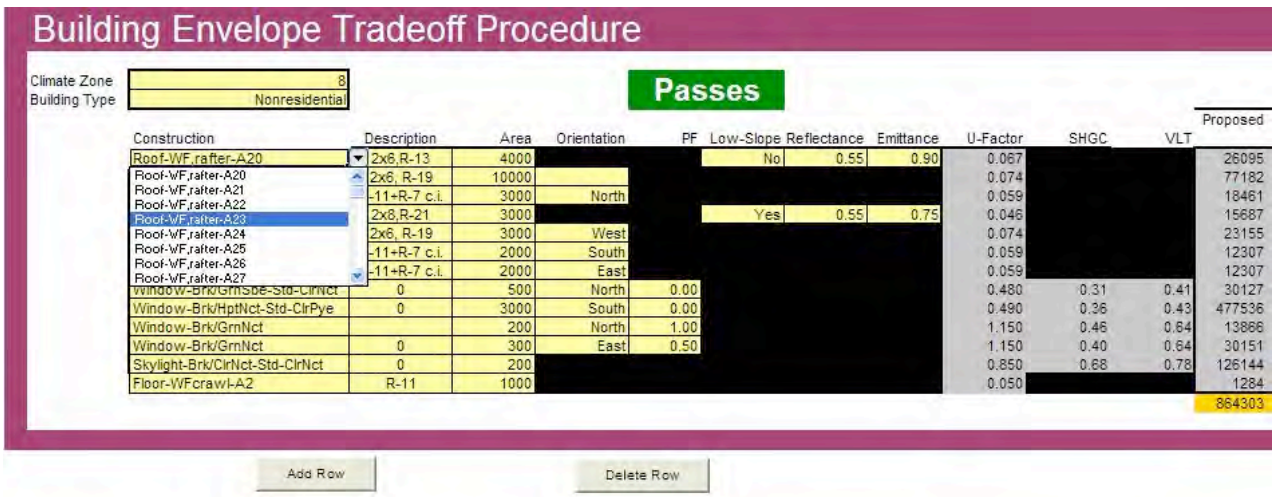

Figure 3-17 Envelope Tradeoff Spreadsheet Tool

First, the user selects the climate zone and the occupancy type (either nonresidential, high-rise residential, or retail). Nonresidential occupancy applies to office buildings and buildings that are typically occupied during office hours.

For each floor, wall, window, skylight, roof and door:

Step 1: Select the construction from the drop-down list. The selections for walls, roofs and doors are named so that the user can match the construction name to a selection from Reference Joint Appendix JA4. For instance, the selection *Roof-WF, rafter-A20* corresponds to table entry A20 in the wood-framed rafter roofs table, Table 4.2.1 of JA4. The entry *Wall-CMU-A9* corresponds to table entry A9 in the concrete masonry unit wall table, Table 4.3.5 of JA4. The selection automatically determines the U-factor; the user may not enter in the U-factor.

The assembly selected for windows or skylights determines the U-factor, Solar Heat Gain Coefficient (SHGC) and visible transmittance (VT). The assembly

selected also determines the weighting coefficient that is used. Separate weighting coefficients exist for light vs. mass construction. For fenestration separate weighting coefficients are provided for each orientation.

The window and skylight constructions are named according to a convention that indicates the number of panes, spacing and coatings. For example, the following code indicates a double-paned window with standard spacing and a pyrolitic low-e coating on the interior pane. The assembly is housed in a metal frame with a thermal break.

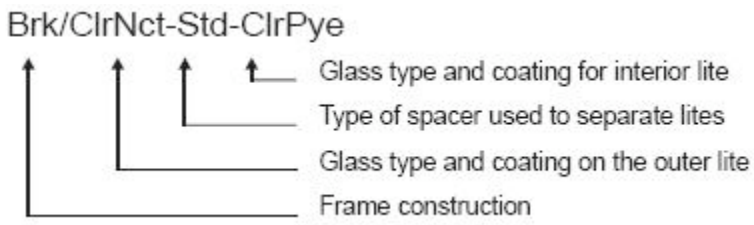

The glass types, frame types and coatings are listed in the table below.

Table 3-14 Glazing Code Definitions

Item	Code	Description
Glass Products	Clr	Standard 6mm thick clear glass
	Grn	Standard green 6mm thick tinted glass
	Hpt	High performance tinted 6mm thick glass such as Azurlite or Evergreen
Frame Types	Mtl	Standard metal frame without a thermal break
	Brk	Metal frame with a thermal break
	Vnl	Vinyl or wood frame
Spacers	Std	Standard spacer
	Ins	Insulating spacer
Coatings	Nct	No Coating
	Mpr	Medium performance reflective coating. This is a durable coating that can be used on single glazing, but is less reflective than LOF eclipse or PPG solarcool.
	Pye	Pyrolitic low-e coating similar to LOF Energy Advantage. This is a hard low-e coating that has an assembly on the order of 0.20.
	Spe	Standard sputter low-e coating. This coating is offered by many manufacturers and has an emissivity on the order of 0.10.
	Sbe	SunBelt low-e coating. This has similar emissivity as the Spe product, but a lower SHGC. An example is Guardian's NU-40 coatings.
	Sue	Super low-e coating. This is an advanced coating that has an emissivity below 0.04. It also has a lower SHGC.
Suspended Film	HtMr22	These are Heat Mirror suspended films with varying transmission. The 22 in the code is the light transmission of the film.

The construction schedule contains a limited number of pre-defined window assemblies. To define a new window assembly, go to the *Schedule* tab of the spreadsheet tool and select the *Add Row* button to add a new window assembly.

Step 2: Enter the Area in square feet. For walls, enter the net wall area excluding doors and windows. For roofs, enter the net roof area excluding skylights.

Step 3: For walls, windows or doors, enter the orientation (north, south, east, or west).

Step 4: For windows enter the projection factor (PF) if an overhang is present. This is defined as the ratio of the horizontal projection out from the wall to the vertical height difference between the top of the window and the bottom of the overhang. If no overhang is present, a value of 0 is used. A maximum value of 1 is permitted for this field.

Step 5: For roofs, select yes/no in the low-slope field to indicate whether the roof is low-slope (a rise-run equal to or less than 2:12) or steep-slope (a rise-run greater than 2:12). Also, enter the aged solar reflectance and thermal emittance values from CRRC 's rated products directory.

If the aged solar reflectance is not given but the initial solar reflectance is given in the CRRC's rated products directory, then the aged solar reflectance can be calculated by using the equation below:

$\rho_{Raged} = 0.2 + 0.7\ [\rho_{Ri,prop} - 0.2]$

Where $\rho_{Ri,prop}$= the initial solar reflectance from CRRC's rated product directory

If the initial solar reflectance is not known, a default aged solar reflectance of 0.1 is assumed. If thermal emittance is not known, a default of 0.75 is assumed.

Steps 1 through 5 are repeated for each building element. The user can enter as many building components as needed to define all walls, windows, skylights, doors, and roofs. The user can click the *Add Row* button if additional entries are needed. To remove an entry, select a construction entry and click the *Delete Row* button.

The program automatically calculates the contribution of TDV energy from each component for the proposed design and standard design and displays the difference. The program also adjusts the standard design window area size if the proposed design window-wall ratio (WWR) or west-facing WWR exceeds prescriptive limits.

If the TDV energy of the proposed design is less than or equal to the TDV energy of the standard design, the building passes the compliance test. If it fails, the performance approach can be used to demonstrate compliance by trading off building envelope performance with other measures such as HVAC equipment efficiency. The following sections provide calculation details for a manual calculation of TDV energy use.

The spreadsheet contains a number of pre-defined construction assemblies from Reference Joint Appendix JA4. The user can define additional assemblies by adding them to the construction schedule. The new assemblies can then be referenced in the user interface. To define a new assembly, select the Schedule tab and click on the *Add Row* button. Enter the assembly name in column C, and select the construction type (i.e roof) in column D. In the next column, select the table from Reference Joint Appendix JA4. Enter the U-factor in column I, and for fenestration enter the SHGC and VT in columns J and K. For mass walls or floors, enter the heat capacity in column L. If fields are not required for an assembly they are grayed out.

B C D E F

Constructions Schedule

Add Row Delete Row

User Name	Type	Joint Appendix Table	Criteria Code
Roof-WF,rafter-A18	Roof	Table 4.2.2 – U-factors of Wood Framed Rafter Roofs	Roof, Light_Other
Roof-WF,rafter-A19	Roof	Table 4.2.2 – U-factors of Wood Framed Rafter Roofs	Roof, Light_Other
Roof-WF,rafter-A20	Roof	Table 4.2.2 – U-factors of Wood Framed Rafter Roofs	Roof, Light_Other
Roof-WF,rafter-A21	Roof	Table 4.2.2 – U-factors of Wood Framed Rafter Roofs	Roof, Light_Other
Roof-WF,rafter-A22	Roof	Table 4.2.2 – U-factors of Wood Framed Rafter Roofs	Roof, Light_Other
Roof-WF,rafter-A23	Roof	Table 4.2.2 – U-factors of Wood Framed Rafter Roofs	Roof, Light_Other
Roof-WF,rafter-A24	Roof	Table 4.2.2 – U-factors of Wood Framed Rafter Roofs	Roof, Light_Other
Roof-WF,rafter-A25	Roof	Table 4.2.2 – U-factors of Wood Framed Rafter Roofs	Roof, Light_Other
Roof-WF,rafter-A26	Roof	Table 4.2.2 – U-factors of Wood Framed Rafter Roofs	Roof, Light_Other
Roof-WF,rafter-A27	Roof	Table 4.2.2 – U-factors of Wood Framed Rafter Roofs	Roof, Light_Other
Roof-WF,rafter-A28	Roof	Table 4.2.2 – U-factors of Wood Framed Rafter Roofs	Roof, Light_Other
Roof-WF,rafter-F18	Roof	Table 4.2.2 – U-factors of Wood Framed Rafter Roofs	Roof, Light_Other
Roof-WF,rafter-H18	Roof	Table 4.2.2 – U-factors of Wood Framed Rafter Roofs	Roof, Light_Other
Roof-SIP-A1	Roof	Table 4.2.3 – U-factors of Structurally Insulated Panels (SIPS) Roof/Ceilings	Roof, Light_Other
Roof-SIP-A2	Roof	Table 4.2.3 – U-factors of Structurally Insulated Panels (SIPS) Roof/Ceilings	Roof, Light_Other
Roof-SIP-A3	Roof	Table 4.2.3 – U-factors of Structurally Insulated Panels (SIPS) Roof/Ceilings	Roof, Light_Other
Roof-SIP-A4	Roof	Table 4.2.3 – U-factors of Structurally Insulated Panels (SIPS) Roof/Ceilings	Roof, Light_Other
Roof-Metal,rafter-A16	Roof	Table 4.2.5 – U-factors of Metal Framed Rafter Roofs	Roof, Light_Other
Roof-Metal,rafter-A17	Roof	Table 4.2.5 – U-factors of Metal Framed Rafter Roofs	Roof, Light_Other
Roof-Metal,rafter-A18	Roof	Table 4.2.5 – U-factors of Metal Framed Rafter Roofs	Roof, Light_Other
Roof-Metal,rafter-A19	Roof	Table 4.2.5 – U-factors of Metal Framed Rafter Roofs	Roof, Light_Other
Roof-Metal,rafter-A20	Roof	Table 4.2.5 – U-factors of Metal Framed Rafter Roofs	Roof, Light_Other
Roof-Metal,rafter-A21	Roof	Table 4.2.5 – U-factors of Metal Framed Rafter Roofs	Roof, Light_Other
Roof-Metal,rafter-A23	Roof	Table 4.2.5 – U-factors of Metal Framed Rafter Roofs	Roof, Light_Other
Roof-Metal,rafter-A25	Roof	Table 4.2.5 – U-factors of Metal Framed Rafter Roofs	Roof, Light_Other
Roof-Span Deck-A1	Roof	Table 4.2.6 – U-factors for Span Deck and Concrete Roofs	Roof, Mass
Roof-Span Deck-A2	Roof	Table 4.2.6 – U-factors for Span Deck and Concrete Roofs	Roof, Mass

Figure 3-18: Construction Schedule

Example 3-21

Question

A building has a 6” medium weight concrete masonry unit wall with partially grouted cells and a 1.5” thick interior furring space with wood strips and R-5 insulation. How can a new construction assembly be defined?

Answer

From Table 4.3.5 of Reference Joint Appendix JA4, the CMU has a U-factor of 0.58 and a heat capacity of 8.4. The effective R-value of the interior furring space from Table 4.3.13 of JA4 is 4.4. The U-factor of the entire assembly is calculated from equation 4-1 in Reference Joint Appendix JA4:

$$U_{With.Cont.Insul} = 1 / (1/_{UCol.A} + R_{Cont.Insul})$$

$$U = 1 / (1/0.58 + 4.4) = 0.163$$

The new assembly is defined in the Schedule tab of the Overall Envelope Spreadsheet Tool. Define the name of the assembly in column C, select Wall in column D, select Table 4.3.5 in column E, enter the U-factor of 0.163 in column I, and enter the heat capacity of 8.4 in column L. The assembly can now be referenced on the main User Interface tab of the spreadsheet tool.

3.7.2 TDV Energy of the Standard Building – Calculation Details

The TDV energy of the standard building is calculated according to equation NA5-1 in Reference Nonresidential AppendixNA5. For each building envelope component (floor, wall, door, window, skylight, and roof), the U-factor from the prescriptive requirements (Tables 143-A and 143-B) is used. For windows, the prescriptive relative solar heat gain (RSHG) requirement, which is based on the window-wall ratio, is used.

Step 1 – Set Opaque Areas to Match Proposed Design

For opaque building elements, the area of each component of the standard building is equal to the component area of the proposed building. The wall area is the net wall area excluding doors and windows, and the roof area excludes area from skylights. The window wall ratio (WWR) is the total window area in the gross exterior walls, divided by the gross exterior wall area.

Example 3-22

Question

How is exterior wall area calculated for the following wall (dimensions in ft)?

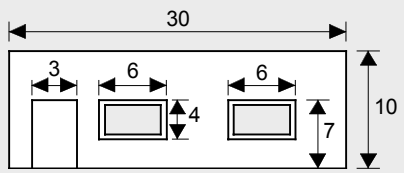

Answer

The gross exterior wall area is 30 x 10 = 300 ft^2. The door area is 3 x 7 = 21 ft^2. The window areas are 6 x 4 = 24 ft^2 each, or a total of 48 ft^2. The exterior wall area is the gross minus doors and windows, or 300 ft^2 - 21 ft^2 - 48 ft^2 = 231 ft^2.

Step 2 - Adjust Fenestration Areas if Necessary

In most cases, the window areas of the standard design building match those of the proposed design. However, the standards have additional limitations on the maximum allowable window area. The window area for the standard building is adjusted if the total window area exceeds limits defined in §143(b)2 of the Standards. Window area adjustment is required for either of the following conditions:

- Window wall ratio is greater than 40%, or
- West wall window area exceeds the maximum allowable limit.

If either of these conditions is met, an adjusted window area is used to calculate the standard building TDV energy use.

The first adjustment is for buildings with very large window area. If the actual window wall ratio is greater than 40%, then an area equal to 40% of the gross wall area is used to calculate the standard TDV energy use. Alternatively, for buildings with

substantial display perimeter areas (see Section 3.2 **3.1.2**), an area equal to six feet high by the length of the display perimeter is calculated. If this value is greater than 40% of the gross exterior wall area, then it is used in the standard TDV energy use calculation.

The second limitation is on west window wall area. The maximum allowable west window area is the greater of 40% of the west exterior wall area or 6 times the west display perimeter. If the west window area of the proposed building exceeds this limit, the west window area for the standard design is set to the maximum allowed area.

If *both* of the conditions above apply, then two separate adjustments are made. First, the window area for each of the north, east, south and west orientations is scaled down proportionate to the window area on that orientation. For example, if the total window area on all orientations is 45% of the exterior wall area for all orientations, the standard window area for each orientation is multiplied by the factor 0.4/0.45, or 0.889. This maintains the same fraction of window area on each orientation (see example below). Then, the west wall window area is checked to see if it still exceeds the greater of 6 times of the display perimeter or 40% of the gross west wall area. If it does, it is scaled down so that the west window area does not exceed the prescriptive limit. If either of these adjustments is made to the standard window area, the exterior wall area is also adjusted so that the gross exterior wall area for each orientation matches the proposed design.

Skylights are treated similarly. The actual skylight area or the rough opening area will be used to calculate the standard TDV energy use. If the skylight is site-built (as in the case of large atrium roofs, malls, or other applications) and its shape is three-dimensional (not flat), then the area is the actual surface area, not the opening area. If the skylight area is larger than 5% of the gross exterior roof area (roof doors not included for the standard building), then an area equal to 5% of the roof area is used. Alternatively, if the building has an atrium over 55 ft high, then the allowance for skylights is increased to 10% (or the actual skylight area if less than 10% of the gross roof area).

Example 3-23

Question

What is the window wall ratio (WWR) for the following west-facing wall (dimensions in ft)? How is the standard design window and wall area adjusted under the overall envelope approach?

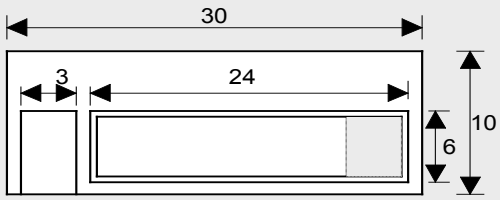

Answer

The gross exterior wall area is 30 x 10 = 300 ft^2. The window area is 24 x 6 = 144 ft^2. The WWR is 144/300 = 0.48, or 48%. The exterior wall area is 300 - 144 = 156 ft^2. The window area must be adjusted downward to 40% of the gross exterior wall area, or 0.40 x 300 = 120 ft^2. This is a window area reduction of 144 -120 = 24 ft^2. The exterior wall area must be increased by the same amount to 156 + 24 = 180 ft^2 (as shown by shaded area in sketch above).

Example 3-24

Question

The building has a west-facing wall with the dimensions shown in the example above. The north, east and south facing walls have identical dimensions (30 ft width by 10 ft height). The south-facing wall has a window area of 100ft^2. The east and north walls have window areas of 148 ft^2 each. What window area adjustment is required, if any, to the standard design?

Answer

The building gross exterior wall area is 1200 ft^2. The total window area is 144 + 100 + 148 + 148 = 540 ft^2. The building WWR is 540/1200 = 0.45, or 45%. The window areas need adjustment.

The first step is to adjust all window areas downwards in proportion to the 40% WWR prescriptive requirement.

West Wall: 144 x 0.4/0.45 = 128 ft^2

North, east walls: 148 x 0.4/0.45 = 131.56 ft^2

South wall: 100 x 0.4/0.45 = 88.89 ft^2

Next, check the window wall ratio of the adjusted west window. WWR = 128 / 300 = 0.427. Since the WWR still exceeds 40%, it is adjusted downwards to be 40% of the gross wall area, or 120 ft^2.

As a check, the sum of the adjusted window areas should not exceed the maximum allowed window area: 120 + 131.56 + 131.56 + 88.89 = 472 ft^2, which does not exceed 40% of the wall area (480 ft^2). Note that the south wall window area must be decreased, even though the south window area is only 33% of the south exterior wall area.

The wall areas of the standard building are adjusted so that the gross exterior wall area on each façade remains at 300ft^2.

Step 3 – Use Prescriptive Envelope Criteria from the Standards

For the standard design building, the U-factors are set to the prescriptive requirements in Tables 143-A, 143-B and Table 143-C. The criteria for walls, roofs and floors depend upon whether or not the construction is a lightweight or mass construction.

For windows, the relative solar heat gain (RSHG), which accounts for the solar heat gain coefficient of the window as well as shading effects of overhangs, is used. The RSHG coefficient criterion depends on the window-wall ratio and window orientation. For higher WWR, the criterion is more stringent. The visible light transmittance of the standard design windows is 1.2 times the relative solar heat gain coefficient.

For skylights, the solar heat gain coefficient for the standard building depends upon the skylight type (glass with curb, glass without curb, or plastic), the ratio of the skylight area to roof area, and climate zone. There are two categories for this skylight area to roof area ratio (0-2% and 2.1-5%). This is taken from Standards Table 143-A, 143-B, or 143-C. The standard design type of skylight must match the proposed design; if the proposed design has a curb, then the standard design would as well.

Step 4 – Lookup weighting coefficients

Weighting coefficients are selected from Table NA5-3 of Reference Nonresidential Appendix NA5 for nonresidential buildings with normal occupancy patterns, Table NA5-4 for buildings with 24-hour occupancy (i.e., high-rise residential, hotels), or Table NA5-5 for retail buildings. The development of these tables for the various occupancies is based on the U-value Tables in 143-A, B, and C in the Standards. The coefficients were developed using the occupancy schedules for each of the occupancies included in the Nonresidential ACM Manual, which resulted in the differences in the coefficients for retail operation versus other nonresidential occupancies.

Table NA5-1 shows which coefficient categories to use with each table from Reference Joint Appendix JA4. For roofs, separate coefficients exist for light roofs, attic roofs, and mass roofs.

For walls, the heat capacity of the construction determines whether it is considered light, medium mass or heavy mass construction. The light wall coefficient is used for all framed constructions; mass wall coefficients are only used if the heat capacity is greater than 7.0 Btu/ft^2-F. The construction is considered medium mass if it has a heat capacity between 7.0 and 15.0 Btu/ft^2-F and heavy mass if it has a heat capacity greater than 15.0 Btu/ft^2-F.

For windows, the weighting coefficients depend on orientation and climate zone. Three weighting coefficients are used for each window: the solar glazing weighting coefficient (C_{Gs}), the visible transmittance coefficient (C_{Gt}), and the U-factor coefficient (C_{Gu}).

Step 5 – Calculate the TDV energy use

The TDV energy use of each building envelope component is then calculated. For opaque constructions, the TDV energy use is simply the product of the weighting coefficient, area and U-factor.

$TDV_W = A_W \times C_W \times U_W$

For windows and skylights, the TDV energy use is given by:

$TDV_G = A_G \times [(C_{Gu} \times U_G) + (C_{Gs} \times SHGC_G) + (C_{Gt} \times VT_G)]$

$TDV_S = A_S \times [(C_{Su} \times U_S) + (C_{Ss} \times SHGC_S) + (C_{St} \times VT_S)]$

The effect of the glazing Visible transmittance (VT) and skylight VT on TDV energy is estimated through the use of the weighting coefficients C_{Gt} and C_{St}. Visible transmittance was introduced to account for the effects of single-pane vs. multiple-pane glazing. The solar heat gain coefficient (SHGC) is measured at a normal angle of incidence. At high angles of incidence, the solar heat gain coefficient drops off more quickly for multiple-pane glazing than it does for single-pane glazing. As a result, SHGC underestimates the heat gain effects of single-pane glazing over the course of the day. Including a term for visible transmittance better models the heat gains that occur at various sun angles throughout the day. For a given SHGC, a lower visible transmittance corresponds to either multiple glazing layers or films, both of which reduce angular SHGC more quickly as incidence angle increases.

Example 3-25

Question

A west facing wall as shown below has 2x4 construction with R-13 insulation. Windows are double-paned with a U-factor of 0.57 and a solar heat gain coefficient of 0.48 and visible transmittance of 0.58. The door has a U-factor of 0.7. What is the standard design TDV energy use associated with this wall if the building is in climate zone 3?

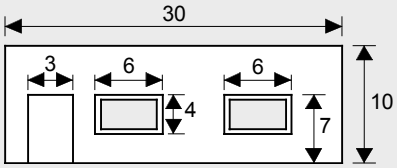

Answer

The wall has a net surface area of 231 ft^2, the windows a surface area of 48 ft^2 and the door 21 ft^2. The U-factor criterion from Table 143-A Wood framed is 0.110 for the wall and 0.70 for the swinging door. The coefficient for the wall and door is taken from Table NA5-3 of Reference Appendix NA5 as C_w = 79.89. The light wall coefficient is used for all framed constructions; mass wall coefficients are only used if the heat capacity is greater than 7 Btu/ft^2-˚F. The coefficients for the window U-factor, SHGC and VT from Table NA5-3 are $C_{Gu(west)}$=20.45, $C_{Gs(west)}$ =206.01, and $C_{Gt(west)}$= 8.34, respectively. For a window wall ratio of 48/300=0.16, the window prescriptive criteria from Table 143-A of the Standards are 0.77 for U-factor, 0.55 for RSHGC Non-North. The visible transmittance

of the standard design windows is 1.2 times the relative solar heat gain coefficient transmittance and is set equal to 1.2 x RSHGC, or 0.66.

The wall and door TDV is calculated by:

$TDV_W = C_W \times U_W \times A_W = 79.89 \times 0.110 \times 231 = 2030.0$

$TDV_D = C_W \times U_D \times A_D = 79.89 \times 0.70 \times 21 = 1174.4$

The window TDV energy is calculated by:

$TDV_G = A_G \times [(C_{Gu} \times U_G) + (C_{Gs} \times SHGC_G) + (C_{Gt} \times VT_G)$

$= 48 \times [(20.45 \times 0.77) + (206.01 \times 0.55) + (8.34 \times 0.66)] = 6,458.7$

3.7.3 TDV Energy of the Proposed Building – Calculation Details

The TDV energy of the proposed building is calculated by equation NA5-2 in Reference Nonresidential Appendix NA5. There are six steps to calculating the proposed TDV energy use:

Step 1 - Calculate areas of each type of envelope assembly (walls, windows, roofs, etc.).

Step 2 - If the building includes a large enclosed space, a minimum area of skylights is required. Determine the minimum skylight area as described in Section 3.2.4.

Step 3 - Specify U-factors for all constructions, and SHGC and VT for fenestration.

Step 4 – Determine the roof aged reflectance and thermal emittance values.

Step 5 - Look up the appropriate weighting coefficient from tabulated data in Reference Nonresidential Appendix NA5. (This is done automatically by the spreadsheet tool.)

Step 6 – Multiply the U-factors, areas and weighting coefficients to calculate the TDV energy use for the building envelope component.

These steps are repeated for each building envelope component, and the TDV energy use is summed to obtain the total TDV energy use for the proposed building. Each step is described below in greater detail.

Step 1 - Calculate Areas

First, identify each type of assembly in the building envelope, where a complex building may have varied types of assemblies. Assemblies are different if they have different materials or thermal properties. For example, a steel stud framed wall with a 1 in. stucco exterior would be different from a steel stud framed wall with 4 in. brick cladding.

Next, calculate the areas of each assembly. All dimensions are taken at the exterior surface of the assembly. The sum of all the vertical surface areas is the gross exterior wall area (including, windows, doors etc.). The exterior wall area is the opaque wall area only excluding windows and doors).

In the case of windows, the area is based on the rough opening dimensions. The actual window area is always used for the proposed design window area (even if it exceeds the prescriptive limit).

Step 2 - Determine Minimum Required Skylight Area

This step applies only for large enclosed spaces in Climate zones 2 through15 with a floor area greater than 8,000 ft^2, a ceiling height of at least 15 ft. Refer to Section 3.2.4, and §143(c) of the Standards for details. The required skylight area is based on daylit area or effective aperture – see Section 5.2.1.4 for details on calculating effective aperture.

If the building contains a large enclosed space that meets these criteria, the skylight area of the proposed building must exceed the minimum required area. The actual skylight area of the proposed building is used in the standard TDV energy budget.

Step 3 - Determine Assembly Thermal Properties

The assembly thermal properties are taken from the appropriate table of Reference Joint Appendix JA4. The selection from the JA4 table determines the U-factor for opaque constructions. For windows, the U-factor, solar heat gain coefficient (SHGC) and visible transmittance (VT) are taken from NFRC rating information. If NFRC rating information is not available, default values for U-factor and SHGC are selected from Table 116-A and Table 116-B of the Standards, and the default value for VT is equal to 1.2 times the default SHGC.

For windows, the presence of overhangs is accounted for by a projection factor (PF). This is defined as the ratio of the horizontal projection of the overhang to the vertical distance from the top of the window to the overhang.

Step 4 – Determine Roof Reflectance and Emittance

This step only applies to roof elements. A portion of the solar radiation absorbed by the roof will be conducted through the envelope to the building space. The 2008 Standards prescriptively require a roofing product with high solar reflectance and thermal emittance which is referred to as a “cool roof”. Nonresidential buildings with low-sloped or steep-sloped roofs in all climate zones except 1 (north coast) and 16 (mountains) require a cool roof. Cool roofs absorb less of the solar energy, thus reducing the heat gain to the space (see Section 3.4).

The proposed aged value of roof reflectance from CRRC Rated Product Directory should be used in the calculation. If aged value for the reflectance is not available in the CRRC Rated Product Directory then the equation below (equation ???) may be used to calculate aged reflectance:

$\rho_{aged,prop} = 0.2 + 0.7\,[\rho_{i,prop} - 0.2]$ Equation???

Where $\square_{ii,prop}$ = Initial Reflectance listed in the CRRC Rated Product Directory.

If the initial reflectance is not known, a default of 0.1 is assumed. If emittance is not known, a default of 0.75 is assumed. (The lower reflectance for non-CRRC

tested roofs is penalizing, since this will result in a higher value for the radiation absorbed and conducted through the roof.)

The roof reflectance and emittance are combined into a cool roof multiplier, which is used in the TDV energy calculation:

$M_{CR,i} = 1 + c_{Ref} \times (\square_{aged,prop} \square \square_{aged,std}) + c_{Emit} \times (\square_{prop} \square \square_{std})$

The $\rho_{aged,std}$ and ε_{std} represent the aged solar reflectance and thermal emittance for the standard design. The standard design aged solar reflectance and thermal emittance values are taken from Table 143-A, Table 143-B or Table 143-C of the Standards. Different values are provided for low-sloped and steep-sloped roofs (with a rise to run greater than 2:12). If the proposed aged reflectance and emittance equal the standard design aged reflectance and emittance, the cool roof multiplier is 1. The coefficients c_{Ref} and c_{emit} are taken from Table NA5-3, NA5-4 or NA5-5 of Reference Nonresidential Appendix NA5.

Step 5 - Determine weighting coefficient

Once the areas and allowed U-factors are determined for each assembly, the weighting coefficient is obtained from a set of tables in Reference Nonresidential Appendix NA5. This weighting coefficient accounts for the impacts of the envelope component on TDV energy use. Separate tables are provided for nonresidential buildings (Table NA5-3) with normal occupancy, 24-hour occupancy (Table NA5-4), and retail occupancy (Table NA5-5). The 24-hour occupancy table would apply to high-rise residential buildings and hotels and motels. For a given building component, the weighting coefficient for the proposed design matches the coefficient for the standard design. The tables also include two weighting coefficients to account for overhangs on windows (see next step).

Step 6 – Calculate Overall Envelope TDV energy

For walls and doors, the Overall Envelope TDV energy is the product of the U-factor, the area, and the weighting coefficient. The TDV term for walls from equation NA5-2 is:

$TDV_W = A_W \times U_W \times C_W$

Heat gain and heat loss through windows and skylights occurs by both conduction and radiation. Windows and skylights use three separate weighting coefficients: one for the U-factor, one for the solar heat gain coefficient and one for the visible light transmittance. The window TDV energy term from equation NA5-2 is:

$TDV_G = A_G \times [(C_{Gu} \times U_G) + (C_{Gs} \times SHGC_G \times M_{OH}) + (C_{Gt} \times VT_G)]$

For windows an overhang multiplier M_{OH} is calculated based on two weighting coefficients and the projection factor:

$M_{OH} = 1 + a \times PF + b \times PF^2$

Coefficients a and b are taken from Table NA5-3, NA5-4 or NA5-5 as appropriate, and are dependent on orientation. If no overhang is present, the projection factor equals 0, and the overhang multiplier term equals 1.

A similar term is used to calculate the effect of skylights on TDV energy:

$TDV_S = A_S \times [(C_{Su} \times U_S) + (C_{Ss} \times SHGC_S) + (C_{St} \times VT_S)]$

Example 3-26

Question

A west facing wall for an office building (nonresidential occupancy) as shown below has 2x4 construction with studs 16" o.c. and with R-13 insulation. Windows are double-paned with a U-factor of 0.57 and a solar heat gain coefficient of 0.48 and visible transmittance of 0.58. The door has a U-factor of 0.70. What is the TDV energy use associated with this wall if the building is in climate zone 3?

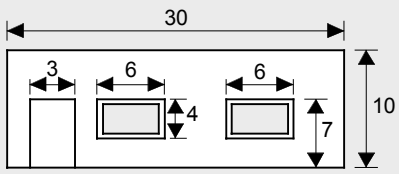

Answer

The wall has a net surface area of 231 ft^2, the windows a surface area of 48 ft^2 and the door 21 ft^2. The U-factor for the wall from table 4.3.1 of Reference Joint Appendix JA4 is 0.102. The coefficient for the wall and door is taken from Table NA5-3 of Reference Nonresidential Appendix NA5 as 79.89. The coefficients for the window U-factor, SHGC and VT from Table NA5-3 are 20.45, 206.01, and 8.34, respectively. No overhang is present, so the overhang multiplier is 1.

The wall TDV is calculated by:

$TDV_W = C_W \times U_W \times A_W = 79.89 \times 0.102 \times 231 = 1882.4$

The door TDV is calculated by:

$TDV_D = C_W \times U_D \times A_D = 79.89 \times 0.70 \times 21 = 1174.4$

The window TDV is calculated by:

$TDV_G = A_G \times [(C_{Gu} \times U_G) + (C_{Gs} \times SHGC_G \times M_{OH}) + (C_{Gt} \times VT_G)$

$= 48 \times [(20.45 \times 0.57) + (206.01 \times 0.48 \times 1) + (8.34 \times 0.58)] = 5{,}538.2$

As seen from the calculation, the windows contribute to most of the TDV energy use.

The roof TDV term is the product of the area, U-factor, weighting coefficient and cool roof multiplier:

$TDV_R = A_R \times U_R \times C_R \times M_{CR}$

Example 3-27

Question

A 1200 ft^2 standing seam low-sloped metal roof for a retail building in Los Angeles (climate zone 6) has R-19 insulation draped over purlins. It has an aged roof reflectance of 0.45 and an emittance of 0.75. What is the TDV energy associated with this roof?

Answer

The U-factor from Table 4.2.7 of Reference Joint Appendix JA4 is 0.065. The coefficients for the roof U-factor, reflectance and emittance are taken from Table NA5-5 as 68.50, -4.76, and -1.59, respectively. (The "light roof" coefficient is used since the heat capacity of the roof is less than 7

Btu/ft^2-˚F. In contrast, span deck and concrete roofs use the "mass roof" coefficient. The weighting coefficient is automatically selected when the spreadsheet tool is used.) The standard design aged solar reflectance and thermal emittance from Table 143-A of the Standards is 0.55 and 0.75.

The cool roof multiplier and roof TDV is calculated by:

$M_{CR} = 1 + c_{Ref} \times (\square_{aged,prop} \square \square_{aged,std}) + c_{Emit} \times (\square_{prop} \square \square_{std})$

$= 1 – 4.76 \times (0.45 – 0.55) – 1.59 (0.75 – 0.75) = 1.476$

$TDV_R = C_R \times U_R \times A_R \times M_{CR} = 68.50 \times 0.065 \times 1200 \times 1.476 = 7886.3$

For a complete example of how the standard building TDV energy and proposed building TDV energy are calculated and compared using the overall tradeoff approach, see example 3-28.

Example 3-28

Question

A proposed nonresidential building in San Diego (Climate Zone 7) is designed with metal frame, fixed, single clear glass, which does not meet the prescriptive criteria for fenestration U-factor or SHGC. Moreover, the building does not have a certified cool roof. The building owner would prefer to upgrade insulation levels in the roofs and walls, rather than install double-paned glass. Is it possible to comply with the Standards using this overall envelope method?

The building is two stories with 50,000 ft² of roof area and 180,000 ft² of gross wall area. The building has slab-on-grade floor construction. Exterior walls are constructed of 2x6 metal studs spaced at 16 in. on center. The building has 4 exterior doors, each with a surface area of 25 ft^2 and a U-factor of 0.70. R-19 batt insulation is installed in the cavities and R-7 continuous insulation is installed on the exterior of the wall. The roof construction consists of a low slope roof of 2x12 wood joists on 16-inch centers with R-38 insulation in the cavities.

Fenestration area totals 18,000 ft² with 5,000 ft² on the north and south respectively and 4,000 ft² each on the east and west. The SHGC of the fenestration assembly is 0.78, the U-factor is 1.19 and the visible light transmittance is 0.88. All of the 5 ft high windows are shaded by overhangs with a 3 ft projection, located 2 ft above the top of the window.

Answer

The overall envelope approach can be used to demonstrate compliance. It is necessary to show that the proposed building has a lower Overall Envelope TDV energy than a standard building that meets the minimum requirements of the prescriptive standards. Overall Envelope TDV energy for the proposed and standard buildings is calculated from the equations in Reference Nonresidential Appendix NA5.

The window wall ratio is 18,000 / 180,000 = 0.10, so no window area adjustment is required. The projection factor (PF) is 1, since the horizontal projection (H) is greater than the vertical distance above the window (V). The wall U-factor from Table 4.3.3 of Reference Joint Appendix JA4 is 0.080.

For the proposed design:

$TDV_W = A_W \times U_W \times C_W = 161{,}900 \times 0.080 \times 75.52 = 978{,}135.0$

$TDV_D = A_D \times U_D \times C_W = 100 \times 0.70 \times 75.52 = 5{,}286.4$

The overhang multiplier is given by:

$M_{OH,north} = 1 + a_{north} \times PF + b_{north} \times PF^2 = 1 – 0.43 \times 1 + 0.21 \times 1^2 = 0.78$

$M_{OH,south} = 1 + a_{south} \times PF + b_{south} \times PF^2 = 1 – 0.98 \times 1 – 0.04 \times 1^2 = - 0.02$

$M_{OH,east} = 1 + a_{east} \times PF + b_{east} \times PF^2 = 1 – 0.78 \times 1 + 0.32 \times 1^2 = 0.54$

$M_{OH,west} = 1 + a_{west} \times PF + b_{west} \times PF^2 = 1 – 0.78 \times 1 + 0.32 \times 1^2 = 0.54$

The TDV energy for each window orientation can now be calculated:

$TDV_{G,north} = A_G \times [(C_{G,U} \times U_G) + (C_{G,S} \times SHGC_G \times M_{OH}) + (C_{G,T} \times VT_G)$

$= 5,000 \times [(4.97 \times 1.19) + (151.32 \times 0.78 \times 0.78) + (0.67 \times 0.88)] = 492,834.9$

$TDV_{G,south} = 5,000 \times [(60.43 \times 1.19) + (127.19 \times 0.78 \times -0.02) + (-20.69 \times 0.88)] = 258,601.68$

$TDV_{G,east} = 4,000 \times [(1.81 \times 1.19) + (279.82 \times 0.78 \times 0.54) + (5.40 \times 0.88)] = 499,064.3$

$TDV_{G,west} = 4,000 \times [(2.92 \times 1.19) + (348.89 \times 0.78 \times 0.54) + (1.89 \times 0.88)] = 608,361.9$

The total TDV energy for the windows is the sum of the totals above, or 1,858,862.8.

The roofs solar reflectance and thermal emittance defaults to 0.1 and 0.75, respectively. The roofing product (cool roof) multiplier is:

$M_{CR} = 1 + c_{Ref} \times (\square_{aged,prop} \square \square_{aged,std}) + c_{Emit} \times (\square_{prop} \square \square_{std})$

$= 1 – 3.27 \times (0.1 – 0.55) – 0.93 \times (0.75 – 0.75) = 2.4715$

The U-factor from table 4.2.2 of Reference Joint Appendix JA4 is 0.029. The roof TDV energy is calculated by:

$TDV_R = A_R \times U_R \times C_R \times M_{CR} = 50,000 \times 0.029 \times 94.40 \times 2.4715 = 338,298.9$

Since the weighting coefficient for a mass floor is 0, the TDV term for the floor drops out of the equation.

The total TDV energy of the proposed building is:

$TDV_{prop} = TDV_W + TDV_D + TDV_G + TDV_R = 978,135.0 + 5,286.4 + 1,858,862.8 + 338,298.9 =$ **3,180,583.1**

Now the TDV energy of the standard design building can be calculated. Wall and door U-factors are taken from Table 143-A of the Standards.

For the proposed design:

$TDV_W = A_W \times U_W \times C_W = 161,900 \times 0.098 \times 75.52 = 1,198,215.4$

$TDV_D = A_D \times U_D \times C_W = 100 \times 0.70 \times 75.52 = 5,286.4$

For windows the U-factor criteria from Table 143-A is 0.77, and the SHGC is 0.61. VT is 1.2 x SHGC = 0.732

The same weighting coefficients are used.

$TDV_{G,north} = A_G \times [(C_{G,U} \times U_G) + (C_{G,S} \times SHGC_G) + (C_{G,T} \times VT_G)$

$= 5,000 \times [(4.97 \times 0.77) + (151.32 \times 0.61) + (0.67 \times 0.732)] = 483112.7$

$TDV_{G,south} = 5,000 \times [(60.43 \times 0.77) + (127.19 \times 0.61) + (-20.69 \times 0.732)] = 544859.6$

$TDV_{G,east} = 4,000 \times [(1.81 \times 0.77) + (279.82 \times 0.61) + (5.40 \times 0.732)] = 704146.8$

$TDV_{G,west}$ = 4,000 x [(2.92 x 0.77) + (348.89 x 0.61) + (1.89 x 0.732)] = 865819.12

The total window TDV energy is the sum of the TDV energy from each orientation, or 2,597,938.22.

The standard design roof TDV is calculated by:

$TDV_R = A_R \times U_R \times C_R$ = 50,000 x 0.067 x 94.40 = 316,240

The total TDV energy of the standard building is:

$TDV_{std} = TDV_W + TDV_D + TDV_G + TDV_R$ = 1,198,215.4 + 5,286.4 + 2,597,938.22+ 316,240 = **4,117,680**

The proposed building has a lower TDV energy than the standard building so the building meets the overall envelope requirements of the Standard.

3.7.4 Roof Alterations

The overall envelope approach may be used for roof alterations, to trade off roof insulation with roofing products (cool roof) thermal performance. The installer may wish to add additional insulation in place of a cool roof. In this case, the standard design depends upon the existing level of roof insulation.

For low-sloped roofs, Table 149-A in the Standards shows the minimum level of insulation required for alterations. For nonresidential buildings this is R-8 continuous insulation (U-factor of 0.081) in climate zones 1 and 3 through 9 and R-14 continuous insulation (U-factor of 0.055) in climate zones 2 and 10 through 16. However, the insulation level of the standard design is the greater of the existing insulation or the minimum required in table 149-A unless the roof qualifies for one of the 4 exceptions to §149(b)1Biv:

1. If the existing roof is insulated with at least R-7 insulation or has a U-factor lower than 0.089, no additional roof insulation is required. In this case, if the designer wishes to tradeoff increased insulation in lieu of installing a cool roof, the standard design used for comparison is the existing insulation level.
2. If mechanical equipment is located on the roof and it will not be disconnected as part of roof replacement (exception 2 to 149(b)1Biv), insulation added may be limited to the maximum insulation thickness that will allow a height of 8 inches from the roof membrane surface to the top of the base flashing. In this case, since additional insulation would reduce the height from the roof membrane to the top of the base flashing, no tradeoff is allowed with roof reflectance. A cool roof is required when the designer claims this exception.
3. If adding the required insulation will reduce the base flashing height to less than 8 inches at penthouse or parapet walls (exception 3 to 149(b)1Biv), the insulation added may be limited to the maximum insulation thickness that will allow a height of 8 inches from the roof surface to the top of the base flashing. In this case, since additional insulation would reduce the base flashing height, no tradeoff is allowed with roof reflectance. A cool roof is required when the designer claims this exception.

For steep-sloped roofs, the U-factor criteria of Tables 143-A and 143-B of the Standards apply to the standard design building.

TDV energy of the roof is calculated much in the same way as it is with the whole building overall envelope tradeoff method. The TDV energy of the standard design building is calculated by:

$TDV_R = A_R \times U_R \times C_R$

The TDV energy of the proposed building includes the cool roof multiplier term (M_{CR}) that was described in a previous section:

$TDV_R = A_R \times U_R \times C_R \times M_{CR}$

Where $M_{CR} = 1 + c_{Ref} \times (\square_{aged,prop} \square \square_{aged,std}) + c_{Emit} \times (\square_{prop} \square \square_{std})$

Weighting coefficients are taken from table NA5-3, NA5-4 or NA5-5 from Reference Nonresidential Appendix NA5.

Example 3-29

Question

A designer wishes to add additional insulation to a 5,000 ft^2 wood-framed rafter roof in a nonresidential building in climate zone 6 to avoid having to install a cool roof upon reroofing. The rafters are spaced at 24"o.c. What level of insulation is required if the existing roof has R-11 insulation? The new roofing product has an aged reflectance of 0.1 and emittance of 0.75.

Answer

The existing roof has a U-factor of 0.081, which is equal to the minimum insulation requirement of Table 149-A of 0.081. Thus, the standard design roof has a U-factor of 0.081. Since a cool roof is required, the standard design aged roof reflectance is 0.55 and thermal emittance is 0.75.

The coefficients C_R, c_{Ref} and c_{Emit} are taken from Reference Nonresidential Appendix NA5, table NA5-3.

The TDV energy of the Standard design is:

$TDV_R = A_R \times U_R \times C_R = 5000 \times 0.081 \times 83.90 = 33{,}979.5$

The TDV energy of the proposed design is:

$M_{CR,i} = 1 + c_{Ref} \times (\square_{aged,prop} \square \square_{aged,std}) + c_{Emit} \times (\square_{prop} \square \square_{std})$

$M_{CR} = 1 - 2.16 \times (0.1-0.55) + 0.19 \times (0.75-0.75) = 1.972$

The TDV energy of the proposed roof cannot exceed that of the standard design.

$TDV_R = A_R \times U_R \times C_R \times M_{CR} = 33{,}979.5$

$5000 \times U_R \times 83.90 \times 1.972 = 33{,}979.5$

Solving for U_R yields $U_R = 0.041$. The U-factor of the proposed roof must be 0.041 or lower. The designer could install the equivalent of R-25 insulation to obtain a U-factor of 0.039.

3.8 Performance Approach

Under the performance approach, the energy use of the building is modeled by a computer program approved by the Energy Commission. The energy software does an hourly simulation of the proposed building, including a detailed accounting of envelope heat transfers using the assemblies and fenestration

input, and including the precise geometry of exterior overhangs or side fins. The most accurate tradeoffs between different envelope components – and between the envelope, the mechanical system and the installed lighting design – are therefore accounted for and compared with the standard design version of the building. The proposed design has to have TDV energy less than or equal to the standard design. This section presents some basic details on the modeling of building envelope components. Program users and those checking for enforcement should consult the most current version of the user's manuals and associated compliance supplements for specific instructions on the operation of the program. All computer programs, however, are required to have the same basic modeling capabilities. A discussion on the performance approach, and fixed and restricted inputs, is included in Chapter ~~7~~9.

The following modeling capabilities are required by all approved nonresidential computer programs. These modeling features affect the thermal loads seen by the HVAC system model.

3.8.1 Opaque Surface Mass Characteristics

Heat absorption, retention and thermal transfer characteristics associated with the heat capacity of exterior opaque mass surfaces such as walls, roofs and floors are modeled. Typical inputs are thickness, density, specific heat and conductivity. Heat capacity is the product of thickness, density and specific heat. The heat capacity of concrete masonry unit walls and solid concrete walls is provided in Tables 4.3.5 and 4.3.6 of Reference Joint Appendix JA4. Effective R-values for interior and exterior insulation are provided in Table 4.3.13 of Reference Joint Appendix JA4.

3.8.2 Opaque Surface Heat Transfer

Heat gains and heat losses are modeled through opaque surfaces of the building envelope. The following inputs or acceptable alternative inputs are used by this modeling capability:

- Surface areas by opaque surface type.
- Surface orientation and slope.
- Thermal conductance of the surface. The construction assembly U-factor is chosen from tabulated values in Reference Joint Appendix JA4.
- Surface absorptance. Surface absorptance is a restricted input (except for ~~cool~~ roofs).

Surface absorptance and emittance are variable inputs in the proposed design for roofs to provide a 'cool roof credit' in climate zones where a cool roof is not required. The roof reference design is set with a ~~non~~ cool roof surface absorptance for nonresidential buildings in climate zones 2 through 15. The difference in surface absorptance creates a credit that can be used with both the building envelope trade-off option and the whole building performance method. Cool roofs have both a high reflectance and a high emittance. The high reflectance keeps much of the sun's energy from being absorbed and becoming

a component of heat transfer. The high emittance ensures that when the roof does warm up, its heat can escape through radiation to the sky. To model the proposed design as a cool roof, the roofing product must be rated by the Cool Roof Rating Council. If the roof is not rated, a default aged reflectance of 0.08 is used for asphalt or composition shingles and 0.10 for other roofing products. If the proposed design does not have a cool roof, the performance method may be used to trade off other measures, such as increased insulation or HVAC equipment efficiency, so that the TDV energy of the proposed design does not exceed that of the standard design.

3.8.3 Fenestration Heat Transfer

Heat transfer through all fenestration surfaces of the building envelope are modeled using the following inputs:

- Fenestration areas. The glazing width and height dimensions are those of the rough-out opening for the window or fenestration product. Window area of the standard design is limited to the prescriptive limit of the greater of 40% of the gross wall area or six times the display perimeter. If the proposed design window area exceeds this limit, a tradeoff may be made with measures such as increased envelope insulation or increased equipment efficiency to offset the energy penalty from fenestration.
- Fenestration orientation and slope.
- Fenestration thermal conductance. The overall U-factor shall be taken from NFRC rating information, ~~or from~~ -D~~d~~efault values in Table 116-A of the Standards or from the Alternative Default Fenestration, NA6, if less than 10,000sf. ~~of the Standards~~.
- Fenestration solar heat gain coefficient. The SHGC shall be taken from NFRC rating information ~~or from~~ D~~d~~efault values in Table 116-B of the Standards or from the Alternative Default Fenestration, NA6 if less than 10,000sf.
- ~~-~~ If the compliance software requires input of the shading coefficient (SC) instead of the SHGC, the shading coefficient shall be calculated by the following formula:
- SC = SHGC / 0.87

3.8.4 Overhangs and Vertical Shading Fins

Approved computer programs are able to model overhangs and vertical fins. Typical inputs are overhang projection, height above window, window height and the overhang horizontal extension past the edge of the window. If the overhang horizontal extension (past the window jambs) is not an input, then the program must assume that the extension is zero (i.e., overhang width is equal to window width) which results in less benefits from the overhang.

Vertical fins are modeled with inputs of horizontal and vertical position relative to the window, the vertical height of the fin and the fin depth (projection outward perpendicular to the wall).

3.8.5 Interzone Surfaces

Heat transfer modeled through all surfaces separating different space conditioning zones may be modeled with inputs such as surface area, surface tilt and thermal conductance. Thermal mass characteristics may be modeled using the thickness, specific heat, density and types of layers that comprise the construction assembly. Demising partitions separating a conditioned space from an unconditioned space that are insulated with R-13 cavity insulation or with a U-factor less than 0.218 are modeled as adiabatic partitions (no heat transfer). Walls that separate directly conditioned zones from other conditioned zones are modeled as "air walls" with no heat capacity and an overall U-factor of 1.0 Btu/h-ft^2-˚F.

3.8.6 Slab-on-Grade Floors and Basement Floors

Heat transfer through slab-on-grade floors and basement floors is modeled by calculating perimeter heat losses and interior slab heat losses. The perimeter slab area is defined by 2 ft times the perimeter length in feet. The interior slab area is the total slab area minus the perimeter slab area. The surface condition (whether or not the slab is carpeted or exposed), the insulation depth and insulation R-value affect the heat loss through the slab. The insulation depth and insulation R-value affect heat loss through basement floors.

3.8.7 Historic Buildings

Exception 1 to §100(a) states that qualified historic buildings, as defined in the California Historical Building Code (Title 24, Part 8 or California Building Code, Title 24, Part 2, Volume I, Chapter 34, Division II) are not covered by the Standards. However, non-historical components of the buildings, such as new or replacement mechanical, plumbing, and electrical (including lighting) equipment, additions and alterations to historic buildings, and new appliances in historic buildings may need to comply with Building Energy Efficiency Standards and Appliance Standards, as well as other codes. For more information about energy compliance requirements for Historic Buildings, see Section 1.7.1, Building Types Covered, in Chapter 1, the Overview of this manual.

3.9 Additions and Alterations

The Standards offer prescriptive approaches and a performance approach to additions and alterations (but they do not apply to repairs). The prescriptive approaches are discussed in this section, and the performance method is discussed in Chapter ~~7~~ 9of this manual.

Here are some relevant definitions from §101(b):

- An addition is a change to an existing building that increases conditioned floor area and volume. See §149(a)1 and §101(b) for detailed definition.
- When an unconditioned building or unconditioned part of a building adds heating or cooling so that it becomes conditioned, this area is treated as an addition.
- An alteration is a change to an existing building that is not an addition. An alteration could include a new HVAC system, lighting system, or change to the building envelope, such as a new window. See §149(b)1 and §101(b).
- A repair is the reconstruction or renewal of any part of an existing building for the purpose of its maintenance. For example, a repair could include the replacement of a pane of glass in an existing multi-lite window without replacing the entire window. Repairs must not increase the preexisting energy consumption of the repaired component, system, or equipment; otherwise, it is considered to be an alteration. See §149(c) and §101(b).

The standards provide both prescriptive and performance compliance for additions and alterations. For additions, the compliance options include:

a. The prescriptive envelope component approach;

b. The prescriptive overall envelope TDV energy approach;

c. The addition alone performance approach.

For existing-plus-addition-plus alteration, use the performance approach. For more information on the performance approach with additions and alterations, refer to Chapter 9, Section 9.3 of this Manual.

For alterations, the compliance options include:

a. The prescriptive envelope component approach;

b. The prescriptive overall envelope TDV energy approach;

3.9.1 The existing-plus-alteration performance approach.

3.9.1 Mandatory Measures for Additions and Alterations

All additions and alterations must meet the applicable mandatory measures from the following Standards sections:

- §116 - Mandatory Requirements for Fenestration Products and Exterior Doors;

- §117 - Mandatory Requirements for Joints and Other Openings; and
- §118 - Mandatory Requirements for Insulation and ~~Cool Roofs~~ Roofing Products (Cool Roofs).

For more details on these requirements, see Sections 3.2.1, Mandatory Measures (Fenestration); 3.3.1Mandatory Measures (Opaque Envelope Insulation); and 3.4.1Mandatory labeling requirements (Cool Roofs).

Prescriptive compliance for the building envelopes of additions is addressed in §143, Prescriptive Requirements for Building Envelopes. §143 provides two prescriptive compliance options for building envelopes:

- §143 (a) - Envelope Component Approach, or
- §143 (b) - Overall Envelope TDV Energy Approach.

All additions must also comply with §143 (c), Minimum Skylight Area for l~~L~~arge e~~E~~nclosed s~~S~~paces in ~~Low-Rise B~~buildings with three or fewer stories.

For more details on the prescriptive requirements for additions, see Sections 3.1, Overview (Building Envelope); 3.1.1, Prescriptive Requirements (Building Envelope); 3.2.2, Window Prescriptive Requirements; 3.2.3, Skylight Prescriptive Requirements; 3.3.2, Prescriptive Requirements (Opaque Envelope Insulation); 3.4.2, Prescriptive Requirements (Cool Roofs); and 3.7, Overall Envelope TDV Energy Approach.

Alternatively, the addition may meet compliance by using the performance compliance approach of §141, which compares the TDV energy (space conditioning, lighting and water heating) of the proposed building addition to a TDV energy budget that complies with prescriptive requirements.

3.9.2 Alterations – Prescriptive Requirements

In general, any alteration to an existing building that involves changes to a portion of the building envelope triggers the Standards. The prescriptive requirements for alterations to building envelopes are in §149 (b) 1 A and B. ~~. and are reproduced below~~. ~~Note that the 2005 Standards include the first-ever requirements related to cool roofs when roofs on existing buildings are replaced [§149 (b) 1 B].~~

3.9.3 Alterations – Prescriptive Requirements- Opaque Envelope

§149(b)1A

For all nonresidential building alterations exterior walls, demising walls and external floors or soffits must either comply as a component with the

requirements in Tables 143 A, B, or C in the standards, or calculations must be provided which demonstrate that the overall TDV energy use of the overall building or component is equal to or less than the unaltered configuration.

3.9.4 Alterations - Prescriptive Requirements-Fenestrations

§143(a)5, §149(b)1A

Alterations to fenestration must comply with Section 143(a); which means that the new fenestration must meet the U-factor and SHGC requirements listed in Tables143 A,B or C. In cases where the fenestration is temporarily removed and then reinstalled compliance with 143(a) is not required.

In cases where small amount of fenestration area are changed a number of options exist. If less than 150 square feet of fenestration area is replaced throughout the entire building then the Standards require that only the U-value requirements in Tables 143 A, B or C are met. The SHGC or Relative solar heat gain Coefficients requirements need not be met. The same requirements and exceptions apply if 50 square feet or less of fenestration area is added. A typical example of this may be changing a door from a solid door to a glass door.

For hotels/ motels or high rise residential buildings. Up to 150 square feet of added fenestration area is exempt from the 40 percent limitation on west-facing orientation, U-factor, and the total area no greater than 40 percent of the gross wall area limitation in §143(a)5, This additional window must meet the RSHG requirement for the 30-40 percent of the WWR of Table 143-B.

In addition up to 50 square feet of skylight area is exempt from having no greater than five percent of the gross exterior roof area limitation in §143(a)6A in the Standards. In addition the added skylights shall meet the SHGC requirements in Table 143-B for the 2.1 to 5 percent area.

3.9.5 Alterations – Prescritive Requirements - Roofing Products

§149(b)1B

When more than 2,000 ft^2 or more than 50% percent of a roof whichever is less is being replaced on a conditioned building, energy code requirements for roof surface radiative (cool roofs) properties and roof insulation levels are triggered if the existing membrane were overlaid instead of replaced. Thus when a small repair is made, these requirements don't apply.

It should be noted that these envelope requirements only apply to conditioned spaces and do not apply to unconditioned process spaces. However, these

requirements do apply to roofs over office spaces in buildings that also have process spaces. These roof areas can be delineated by the fire separation walls between process areas and large scale office areas.

Replacement Roof Solar Reflectance and Thermal Emittance (Cool Roofs)

Roofing products~~s~~ ~~that have~~with high solar reflectance and high thermal emittance are referred to as "cool roofs" ~~as~~because they absorb less solar heat and give off more heat to their surroundings. ~~; t~~These roofs are cooler and thus reduce air conditioning loads in the space below. Roof radiative properties are rated and listed by the Cool Roofs Rating Council (http://www.coolroofs.org/).

Solar Reflectance Index (SRI) is a new concept in the 2008 Standards. The temperature of a surface depends on the incident solar radiation, surface's reflectance, and emittance. The SRI measures the relative steady-state surface temperature of a surface with respect to standard white (SRI=100) and standard black (SRI=0) under the standard solar and ambient condition. A calculator has been produced by the staff at Lawrence Berkeley National Laboratory which calculates the SRI by designating the Solar Reflectance and Thermal emittance of the desired roofing material. The calculator can be found at……. SRI calculations must be based on moderate wind velocity of 2-6 meters per second. To calculate the SRI the 3-year aged value of the roofing product must be used. By using the SRI calculator a cool roof may comply with an emittance lower than 0.85 as long as the aged reflectance is higher and visa versa.

As described in Section 149(b)1~~.~~B, roof radiative property requirements are different for steep-sloped and low-~~-~~sloped roofs. Low-~~-~~sloped roofs are defined as having a rise of 2 feet or less for every 12 feet of run (horizontally); they have a slope of 9.5 degrees or less from the horizontal. Steep-sloped roofs are defined as having a rise of more than 2 feet for every 12 feet of run (horizontally); they have a slope greater than 9.5 degrees from the horizontal. Low-~~-~~sloped roofs receive more solar radiation than steep-~~-~~sloped roofs in the summer when the sun is high in the sky. Also the color aesthetic considerations are less for low-~~-~~sloped products because it is harder to see low-~~-~~slope roofs from street level.

Cool roofs with a minimum aged solar reflectance of 0.55 and a minimum thermal emittance of 0.75 are required on low-~~-~~sloped nonresidential roofs in climate zones 2 through 15 when roofing is replaced or recovered when using the prescriptive method. Alternatively one can specify a roof with a minimum solar reflectance index[5] (SRI) of 64. ~~-~~The 2008 standards have dropped the requirements for cool roofs on low-~~-~~sloped nonresidential buildings in climate zone 1 (North Coast) and climate zone 16 (Mountains) as these climates do not have enough cooling loads to warrant cool roofs. ~~-~~New for the 2008 standards is that the cool roof requirements are defined in terms of their **aged** reflectance and emittance. These aged values are measured after 3 years of outdoor

[5] Calculated according to ASTM E1980 - 01 Standard Practice for Calculating Solar Reflectance Index of Horizontal and Low-Sloped Opaque Surfaces American Society for Testing and Materials. West Conshohocken, Pennsylvania. The Solar Reflectance Index provides a trade-off between aged reflectivity and thermal emittance.

exposure. The Cool Roof Rating Council (CRRC) rating and labeling program reports both initial and aged solar reflectance and thermal emittance values.

For new products that do not yet have aged ratings, the following calculation can be used to calculate an aged reflectance, R_{aged}, from the CRRC initial solar reflectance rating, $\rho_{initial}$.[6]

$R_{aged} = [0.2+0.7[\rho_{initial}-0.2],$

There is no similar derating of the aged thermal emittance when using the initial thermal emittance rating.

~~As was introduced in the 2005 standards, cool roofs with a minimum aged solar reflectance of 0.55 and a minimum thermal emittance of 0.75 are required on low slope nonresidential roofs in climate zones 2 through 15 when roofing is replaced or recovered. Alternatively one can specify a roof with solar reflectance index[7] (SRI) of 64. The 2008 standards have dropped the requirements for cool roofs on low slope nonresidential buildings in climate zone 1 (North Coast) and climate zone 16 (Mountains) as these climates do not have enough cooling loads to warrant cool roofs.~~

The 2008 standards expanded the cool roof requirements to cover low- sloped roof replacements on high rise residential buildings, hotels and motels in the hottest climate zones in the Central Valley and desert (climate zones 10 ~~through~~, 11, 13, 14 and 15). Low-~~-~~sloped cool roofs are required to have a minimum aged solar reflectance of 0.55 and a minimum thermal emittance of 0.75. As described above, a roof having a solar reflectance index (SRI) of 64 would also comply.

New to the 2008 standards are steep-sloped cool roof requirements. The radiative property requirements are more stringent for light weight roofing materials~~s~~ (like shake and composite roofing) than for roofs that weigh 5 pounds per square foot or more (such as concrete and clay tile).

Lightweight steep-sloped roofing materials, weighing less than 5 lbs/sf, installed in climate zones 2 through 16 must have a minimum aged solar reflectance of 0.20, and a minimum thermal emittance of 0.75 or a solar reflectance index (SRI) of 16. Note that there are no cool roof requirements for climate zone 1 (North Coast).

Heavyweight steep-sloped roofing materials, weighing 5 lbs/sf or more, installed in any climate, must have a minimum aged solar reflectance of 0.15, and a minimum thermal emittance of 0.75 or a solar reflectance index (SRI) of 10.

Roof areas covered by building integrated photovoltaic panels and building integrated solar thermal panels and existing roof areas that have thermal mass

---

[6] ~~Section 118(i)2.~~

[7] Calculated according to ASTM E1980 - 01 Standard Practice for Calculating Solar Reflectance Index of Horizontal and Low-Sloped Opaque Surfaces American Society for Testing and Materials. West Conshohocken, Pennsylvania

over the roof membrane with a weight of at least 25 lb/ft² are exempted for this requirement as per exceptions 3 and 4 to §143(a)1Ai.

Adding Insulation When Roofing Removed to Roof Deck

The California Building Code and local amendments place limitations on how many layers of new roof one can overlay on an existing roof. When this limit is reached, the existing roof layers must be torn off down to the roof deck or to the insulation recover boards.

When re-roofing more than 2,000 ft^2 or re-roofing more than 50~~%~~ percent of the roof area whichever is less on a conditioned building with a low-sloped (2:12 or less rise to run ratio) roof, and the roof deck or recover boards are exposed, adding insulation to roofs with no or little insulation may be required before re-installing the roof membrane. If the roof has at least R-7 insulation or has an overall U-factor of 0.089 Btu/hr□ ft^2~~sf~~□ºF, no additional insulation is required. This overall U-factor is the thermal transmittance of the entire roofing assembly and can include insulation under the roof deck as well as insulation on top of the roof deck. Pre-calculated U-factors must be used from the Reference Joint Appendix JA~~-~~4. Steep-sloped (greater than a 2:12 ~~or less~~ rise to run ratio) roofs are not required to add insulation.

The amount of insulation required varies by climate zone and building type and is given in Table 149-A of the Standards. The requirements are given in terms of a continuous layer of insulation (usually installed on top of the roof deck) or an overall roof U-factor based on the default tables and calculation method in Reference Joint Appendix JA4. The U-factor method provides the most flexibility as insulation can be added continuously on top of the roof deck, or insulation can be added below the roof deck between roof joists or a combination of insulation above and below the roof deck.

- For nonresidential roofs in climate zones 2, 10-16 the minimum required amount of insulation is R-14 (or an overall roof U-factor of 0.055 Btu/hr□ ft^2~~sf~~□ºF).
- For nonresidential roofs, in the milder climate zones 1, 3-9 the minimum required insulation is R-8 (or a overall roof U-factor of 0.081 Btu/hr□ ft^2~~sf~~□ºF)
- For high-rise residential and hotel/~~-~~motel roofs, the minimum required amount of insulation is R-14 (or a overall roof U-factor of 0.055 Btu/hr□ ft^2~~sf~~□ºF) in all climate zones.

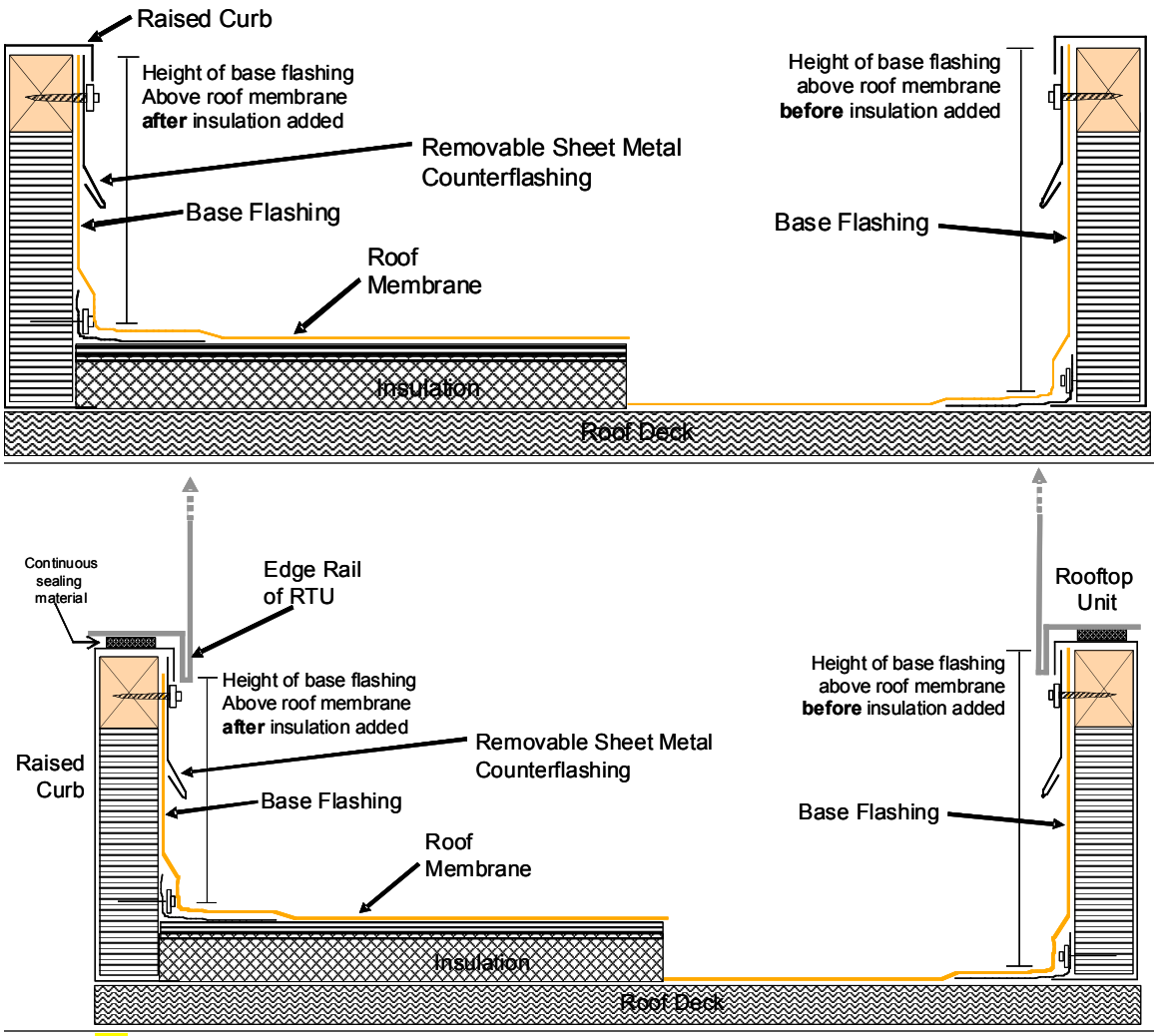

Figure ___ - Base flashing on roof top unit curb detail

When insulation is added on top of a roof, the elevation of the roof membrane is increased. As shown in Figure ___, when insulation is added to a roof and the curb height (or reglet or counterflashing for walls) is unchanged, the height of the base flashing above the roof membrane will be reduced. In some cases when the overhanging edge of the mechanical equipment is very close to the side of the curb, this may also limit how far up the curb the base flashing may be inserted. Many manufacturers and the National Roofing Contractors Association (NRCA) recommend maintaining a minimum base flashing height of 8" inches above the roofing membrane.

Thus when adding insulation ~~to~~on top of a formerly uninsulated or underinsulated roof, one must consider the impacts on base flashing height. It may be desirable to increase curb heights or counterflashing heights to maintain the same or higher base flashing heights above the roof membrane. In other cases, where leak risk is low, one can ask the roofing manufacturer for a variance on installation requirements for a roofing warrantee; this may require additional waterproofing measures to obtain the manufacturer's warrantee. Installing insulation under the roof deck when access is feasible, doesn't change

the base flashing height and in some cases may be the least expensive way to insulate the roof.

In some circumstances it is costly or difficult to increase the curb or counterflashing height for the purpose of maintaining the base flashing at a suitable height above the roof membrane. In the following situations, added insulation is limited to the thickness that will still maintain a base flashing height of 8 inches (20 cm) above the surface of the roof membrane:

- If there ~~re-roofed area has~~ is any mechanical equipment on the roof that is not disconnected and lifted during reroofing ~~the base flashing on these~~ the condition of this "undisturbed" equipment will ~~not be reduced to less than 8 inches~~[8] determine how much, if any, insulation must be added to the entire roof. That is, if the equipment that is not disconnected and lifted is situated on a curb that is 9 inches above the roof membrane, only 1 inch of insulation must be added to the roof. If the undisturbed equpimnet is situated on a curb that is 8 inches (20 cm) or less above the roof membrane, no additional insulation is required.
- Roofs having a "significant length" of penthouse walls or parapet walls with a cladding other than the roofing material and this cladding material must be removed to increase the base flashing height. The criteria for "significant length" varies by building type and climate zone and is based upon the ratio of replaced roof area to length of wall requiring cladding material removal as follows[9]:
    - Nonresidential buildings in climate zones 2 and 10 -16 with less than **25** square feet of roof per linear foot of affected wall length.
    - Nonresidential buildings in climate zones 1 and 3 -9 with less than **100** square feet of roof per linear foot of affected wall length.
    - High rise residential buildings and hotel/motels in all climate zones with less than **25** square feet of roof per linear foot of affected wall length.
- Increasing the elevation of the roof membrane by adding insulation may also affect roof drainage. The 2008 Standards allow tapered insulation to be used to maintain slope-to drain, provided that the average R-value of the insulation equals or exceeds the required minimum.
- Roof areas covered by building integrated photovoltaic panels and building integrated solar thermal panels and existing roof areas that have thermal mass over the roof membrane with a weight of at least 25 lb/ft² are exempted for this requirement as per exceptions 3 and 4 to §143(a)1Ai.

[8] Exception 2 to Section 149(b)1Biv

[9] Exception 3 to Section 149(b)1Biv

Question 1:

A building is being re-roofed and the roofing is torn off down to the roof deck. The roof has no insulation but it does have a single layer radiant barrier that is stapled to the underside of the roof joists. This forms an air cavity between the underside of the roof deck and the radiant barrier. The radiant barrier has a low emissivity (around 5~~%~~ percent). Does this create enough of an insulating value that the roof does not need to be insulated?

Answer:

Added insulation is not required when the existing roof insulation exceeds R-7 or the roof has an overall U-factor less than 0.089 Btu/h□ft^2□ºF. [Exception 1 to §149(b)1Biv] However the effective R-value of a sealed air cavity formed by a single layer radiant barrier on the bottom, roof joists on the side and the roof deck on top is around R-2, much less than the needed R-7 insulation. Thus, upon re-roofing where the roof deck is exposed, added insulation would be required.

In Section 4.1.4 of the Reference Joint Appendix JA4, "Accounting for Unusual Construction Layers," the calculation of the effective thermal resistance of an air cavity is described as follows:

"The thermal resistance of air layers shall be taken from the 2005 ASHRAE Handbook of Fundamentals, for a mean temperature of 50°F, a temperature difference of 20 °F and an effective emittance of 0.82. R-values for air layers for roof and ceiling assemblies shall be based on heat flow up." Applying these conditions but using an effective emittance of 0.05 the thermal resistance values for a cavity depth of 3.5" in the appropriate table in the ASHRAE Handbook of Fundamentals[10] yields an effective R-value of 2.33 ft^2~~ft2~~•ºF•h/Btu. If one assumes surface degradation (or slight condensation) of the radiant barrier to an emittance of 0.2, the effective R-value is 1.77 ft^2~~ft2~~•ºF•h/Btu.

Question 2:

What are the Standards requirements for cool roofs when reroofing an unconditioned warehouse containing conditioned office space? The warehouse has a low-sloped roof.

Answer:

Scenario 1. In this situation (see picture below), we now have either directly or indirectly conditioned space under the roof. The cool roof requirements apply to just the portion(s) of the warehouse roof over the conditioned space(s). The rest of the roof (over unconditioned warehouse space) is not required to be a cool roof.

The walls of the conditioned space go all the way up to the underside of the warehouse.

[10] p. 25.4, 2005 ASHRAE Fundamentals Handbook Table 3: "The Thermal Resistances of Plane Air Spaces, ft^2~~ft2~~•ºF•h/Btu

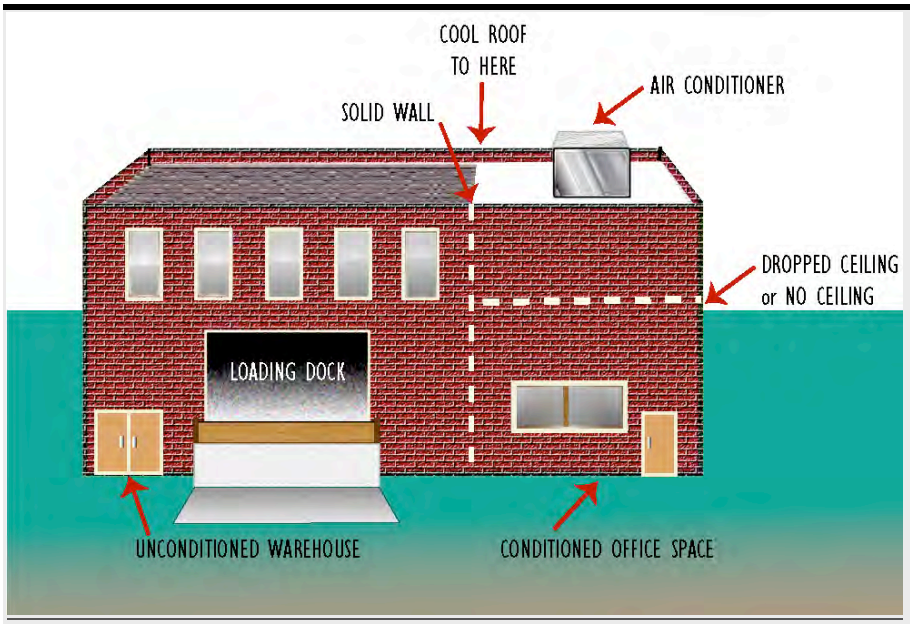

Scenario 2. The walls of the conditioned space do not reach all the way to the warehouse roof (see picture bellow). In this case, the roof requirements do not apply, because the space directly below the roof is unconditioned and communicates with the rest of the unconditioned portion of the warehouse.

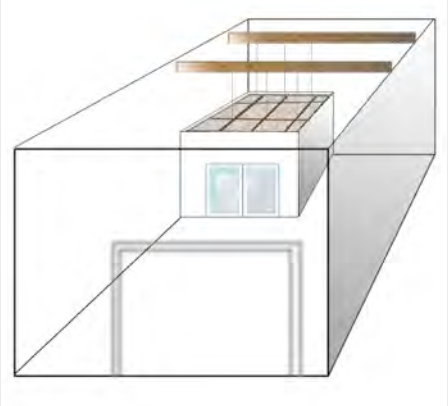

Question 3:

I have a barrel roof on nonresidential conditioned building that needs to be re-roofed. Must I follow the Title 24 roofing product requirement?

Answer:

Yes, the roof would need to meet the aged solar reflectance and thermal emittance for a steep-sloped roof. The reason being a Barrel roof although it has both low-sloped and steep-sloped roofing areas the continuous gradual slope change which would allow the steep-slope section of the roof to be seeing from ground level was the reason to allow barrel roofs to only meet the Steep slope requirement for the entire roof area.

Question 4:

As shown in **Figure** ____, 40% percent of the low-sloped roof on a 500 ft by 100 ft retail building in Concord, California (CZ12) is being re-roofed. The roofing is removed down to the roof deck and there is no insulation. The building has a stucco clad parapet roof and the current base flashing is 9 inches above the level of the roof. Must insulation be added before re-roofing?

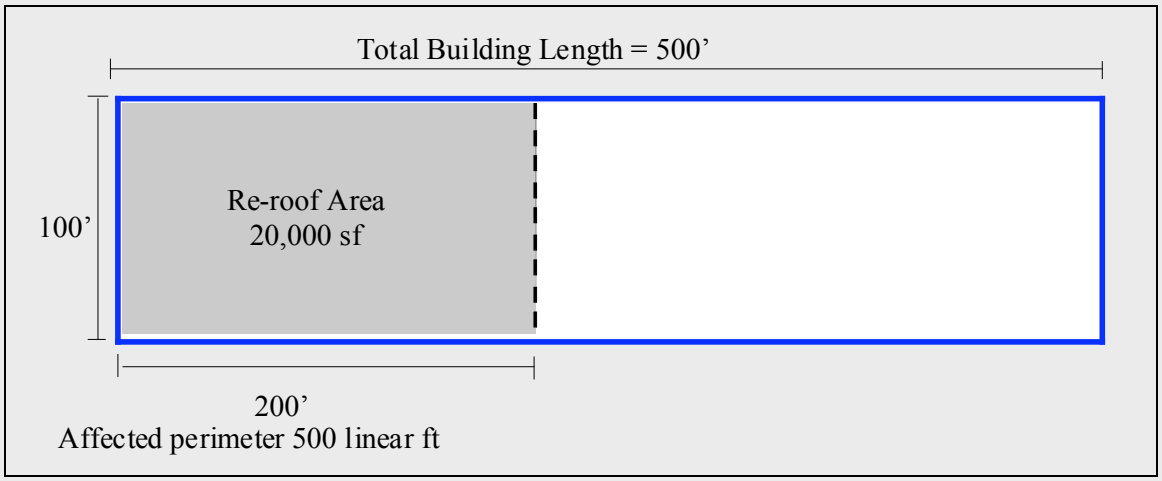

Figure ____ Plan View of Partial Building Re-roofing Project

Answer:

Yes,§149(b)1B requires when either- 50% percent (or more) of the roof area or 2,000 ft^2 , whichever is less is re-roofed down to the roof deck or recover boards that insulation be installed if the roof has less than R-7 insulation. Though the re-roofing covers only 40% percent of the roof area, the

requirements still apply because the 20,000 ft^2 of replacement roof area is greater than the threshold area of 2,000 ft^2. As stated in the question, the roof does not have any insulation and therefore it is required to add insulation.

Concord, California is in Climate Zone 12.[11] As per Table 149-A "Insulation Requirements for Roof Alterations," for nonresidential buildings in Climate Zone 12, the requirement for insulation is either R-14 continuous insulation or an effective roof U-factor of 0.055 Btu/h□ft^2□ºF. If the ratio of replaced roof area to affected clad wall length is less than 25 ft^2 of roof per linear ft of wall, then the insulation thickness is allowed to be limited to the maximum thickness that will maintain a base flashing height of no less than 8 inches above the roof membrane.

The ratio of the replaced roof to the affected wall area is 20,000 ft^2 / 500 linear ft = 40:1. Since this ratio is greater than 25:1, the full required insulation must be installed regardless of the existing base flashing height. This may require changing the height of the base flashing, removing some of the parapet wall cladding and moving the counterflashing (or reglet) higher up on the wall. Alternatively the installer may ask for the roofing manufacturer to provide a variance in the warrantee to accept a slightly lower base flashing height above the roof surface. The specific risk of roof leakage at a given site has to be considered carefully before reducing the base flashing height When access to the underside of the roof deck is available, an alternative method of compliance that does not affect base flashing heights, is to add insulation below the roof deck to the overall U-factor levels given in Table 149-A.

Question 5:

If the building in the question above was located in San Francisco, would the insulation requirements be different on the building?

Answer:

Yes. San Francisco (as shown in Reference Joint Appendix JA 2 of the standards) is in Climate Zone 3. In Table 149-A from §149(b)1Biv -"Insulation Requirements for Roof Alterations," for nonresidential buildings In Climate Zone 3 are R-8 or a U-factor of 0.081.

The criteria for limiting the insulation thickness based on the existing base flashing height are different for Climate Zone 3 than for Climate Zone 12. For nonresidential buildings in Climate Zone 3, if the ratio of replaced roof area to affected clad wall length is less than 100 ft^2 of roof per linear ft of wall, then the insulation thickness is limited to the thickness that will maintain a base flashing height of no less than 8 inches above the roof membrane. The ratio of the replaced roof to the affected wall area is 20,000 ft^2 / 500 linear ft = 40:1. Since this ratio is less than 100:1, only the amount of insulation (and recover board) that will still maintain a base flashing height of 8 inches (20 cm) above the roofing membrane is required. Thus one could still add one inch of insulation board.

Question 6:

A nonresidential building is having 5,000 ft^2 of roofing replaced. During roofing replacement the roof deck will be exposed. This building has a rooftop air conditioner that is sitting on an 8–inch (20 cm) high curb above the roof membrane level. The roof is currently uninsulated. If the rooftop air conditioner unit is not disconnected and not lifted off of the curb during re-roofing is adding insulation required?

Answer:

[11] A listing of climate zones by city is found in ~~Standards~~Reference Joint Appendix JA2.

No, Exception 2 to §149(b)1Biv, specifically exempts re-roofing projects when mechanical equipment is not disconnected and lifted. In this case the requirements for adding insulation are limited to the thicknesses that result in the base flashing height to be no less than 8 inches (20 cm) above the roofing membrane surface, Adding insulation increases the height of the membrane surface and thus for a given curb would reduce the base flashing height above the roof membrane. Since the base flashing height is already 8 inches (20 cm) above the roof membrane, no added insulation is required.

Question 7:

What if the rooftop air conditioner from question 1 is lifted temporarily during re-roofing to remove and replace the roofing membrane, is added insulation required?

Answer:

Yes, insulation is required. Exception 2 to §149(b)1Biv specifically applies when the mechanical equipment is not disconnected and lifted. Since the roof membrane level will be higher after the addition of insulation, the base flashing height will no longer be 8 inches (20 cm) above the roof membrane. When the rooftop unit is lifted as part of the re-roofing project, the incremental cost of replacing the curb or adding a curb extension is reduced. Thus to maintain the 8 inch (20 cm) base flashing height, one can replace the curb or add a curb extension before re-installing the roof top unit. Alternatively one can ask for a roofing manufacture's variance to their warrantee from the typical minimum required 8 Inch (20 cm) base flashing height above the roof membrane to the reduced amount after the roof insulation is installed. The specific risk of roof leakage at a given site has to be considered carefully before reducing the base flashing height. An alternative method of compliance that does not affect base flashing heights, is to add insulation below the roof deck to the overall U-factor levels given in Table 149-A of §149(b)1Biv.

Question 8:

A nonresidential building is having 5,000 ft^2 of roofing replaced. During roofing replacement the roof deck will be exposed. This building has several unit skylights that are sitting on an 8-inch high curb above the roof membrane level. The roof is currently uninsulated. Is added insulation required?

Answer:

Yes, insulation is required. Exception 2 to §149(b)1Biv specifically applies when mechanical equipment is not lifted. Unit skylights are not mechanical equipment and thus the exception does not apply. Removing a unit skylight and increasing its curb height is substantially less effort than that for mechanical equipment.

Question 9

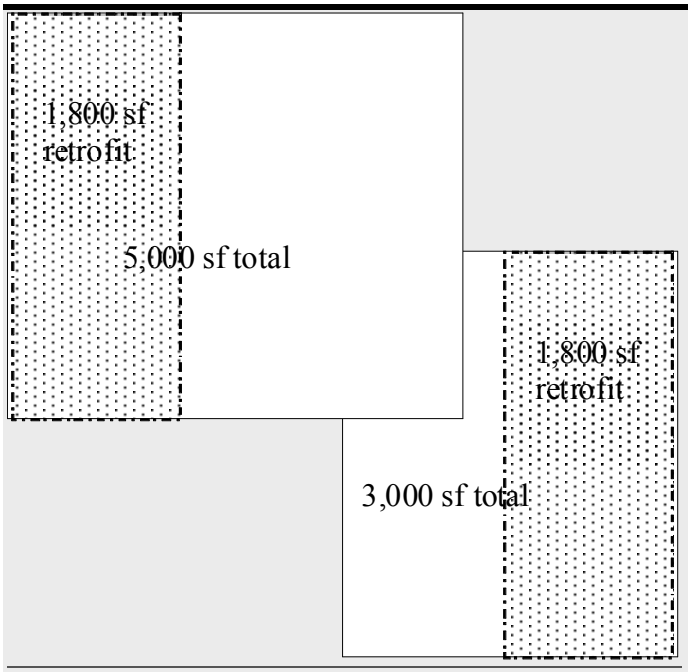

Figure___: Building with two roofs -configurations.

Scenario 1:

A building has low--sloped roofs at two different elevations. One roof is 18 feet- above grade and has a total area of 5,000 ft^2, the other roof is 15 feet- above grade and has a total area of 3,000 ft^2. Both roofs are uninsulated and are above conditioned space. If 1,800 ft^2 of the 3,000 ft^2 roof is being re-roofed and the roof deck is exposed, is that portion of the roof required to be insulated? Is that portion of the roof required to be a "cool roof" (high reflectance and emittance)?

Answer:

Yes, the re-roofed section of the roof is required to be insulated and have a "cool roof". §149(b)1B requires insulation and cool roofs for low--sloped roof alterations if the alteration is greater than 2,000 ft^2 or greater than 50% percent of the roof area. Since 1,800 ft^2 is 60% percent of 3,000 ft^2 the cool roof and insulation requirements apply.

Scenario 2:

If the 1,800 ft^2 of roofing being replaced was on the 5,000 ft^2 uninsulated roof, would the portion of the roof replaced be required to have- "cool roof" radiative properties and have insulation installed?

Answer:

No. The 1,800 ft^2 retrofit is 36% percent of the 5,000 ft^2 roof. Thus the 1,800 ft^2 retrofit is less than 50% percent of the roof area and it is also less than 2,000 ft^2, thus it is not required to comply with the insulation and cool roof requirements in §149(b)1B.

Question 10___

A 10,000 ft^2 building in climate zone 10, with an uninsulated roof above conditioned space is having roofing removed so that the roof deck is exposed. There are two roof top units on this section of the roof that is being altered. One roof top unit has a curb with a 9 inch (23 cm) base flashing and the other has a modern curb with a 14 inch (36 cm) base flashing. Consider the following three scenarios:

Scenario 1:

The roof top unit with the 9 inch (23 cm) base flashing is disconnected and lifted during re-roofing. However, the rooftop unit on the curb with the 14 inch (36 cm) base flashing is not lifted. In this situation, is the insulation added limited to the amount of insulation that will result in an 8 inch (20 cm) base flashing on the unit with the lower curb?

Answer:

No. .The unit with the 9 inch (23 cm) base flashing was disconnected and lifted and thus it does not qualify for EXCEPTION 2 to §149(b)1Biv: "not be disconnected and lifted as part of the roof replacement." One could add as much as 6 inches (15 cm) of insulation before the base flashing height would be reduced below 8 inches (20 cm) on the un-lifted rooftop unit with a 14 inch (36 cm) curb. The climate zone 10 roof insulation requirement is R-14. The thickness of rigid insulation that provides this amount of R-value is substantially less thick than 6 inches (15 cm). Thus the full R-14 insulation would be required.

Scenario 2:

The roof top unit with the 9 inch (23 cm) base flashing is not disconnected and lifted during re-roofing. In this situation, is the insulation that must be added limited to the amount of insulation that will result in an 8 inch (20 cm) base flashing on the unit with the lower curb?

Answer:

Yes. The unit with the 9 inch (23 cm) base flashing was **not** disconnected and lifted and thus it qualifies for EXCEPTION 2 to §149(b)1Biv. One could add only one inch (2.5 cm) of insulation before the base flashing height would be reduced below 8 inches (20 cm) on the un-lifted rooftop unit with a 9 inch (23 cm) base flashing. The insulation requirement is R-14,~~;~~but the thickness of rigid insulation that provides this amount of R-value is greater than ~~one~~ 1 inch (2.5 cm). Therefore, only 1 inch (2.5cm) of additional insulation is required because adding any more insulation would reduce the base flashing height below 8 inches (20 cm) on the unlifted rooftop unit with a 9 inch (23 cm) base flashing.

Scenario 3:

In scenario 2 above does this reduced amount of required insulation applies only to the area immediately surrounding the un-lifted unit or the entire roof?

Answer

~~In this case t~~The added insulation for the entire roof would be limited to 1 inch (2.5 cm) so that the base flashing of the un-lifted unit is not reduced to less than 8 inches (20 cm). However, if a building has multiple roofs, the limitation would only apply to any roof with a rooftop unit that was not disconnected and lifted and that has a low curb.

Question 11

In reroofing, is existing roofing that is a rock or gravel surface equivalent to a gravel roof over an existing cap sheet, and therefore qualify for the exception discussed in the previous question?

Answer

No, the two roofs are not equivalent (rock or gravel roofs do not perform the same as gravel roofs over an existing cap sheet) and therefore the gravel roof over existing cap sheet may not qualify for the exception.

Question 12

If I am doing a reroof, would the Exceptions 1 through 4 To Section 143(a)1Ai apply to reroofing and roof alterations?

Answer

Yes, these Exceptions do apply to reroofing and alterations and the roofs that meet one or more of these exceptions are exempt from the cool roof requirements.

~~**§149 (b) 1 A.** Alterations to the building envelope other than those subject to 149 (b) 1 B shall:~~

~~i. When there are no changes to fenestration area, meet the requirements of Section 143 (a) for the altered component; or~~

~~**EXCEPTION to Section 149 (b) 1 A (i):** When only a portion of an entire building's fenestration is replaced, or 50 ft^2 or less of fenestration area is added, compliance may be shown with Section 149 (b) A (i) except that the solar heat gain coefficient requirement of Section 143 is not required.~~

~~ii. Neither increase the overall heat gain nor increase the overall heat loss of the building envelope.~~

~~§149 (b) 1 B. Replacements, recovering or recoating of the exterior surface of existing nonresidential low-sloped roofs shall meet Subsection i or ii where more than 50% of the roof or more than 2,000 square feet of roof, whichever is less, is being replaced, recovered or recoated.~~

~~i. The roof shall meet the requirements of either 118 (i) 1 or 118 (i) 2; and for liquid applied roof coatings, Section 118 (i) 3, or~~

~~ii. The building envelope, which has a roof replacement subject to this requirement, shall comply with Section 143 (b) 3, where~~

~~*a. the standard building has a solar reflectance which meets the requirements of Section 143 (a) 1 and the other terms in Equation 143-D correspond to the existing building at the time of the application of the permit, and*~~

~~*b. the proposed building has either:*~~

~~(1.) The solar reflectance of the replacement roof product, as certified and labeled according to the requirements of Section 10-113 and the roof product meets the requirements of Section 118 (i) 3, or~~

~~(2.) A solar reflectance of 0.10 if the product has not been certified and labeled and/or does not meet the requirements of Section 118 (i) 3, and~~

~~(3.) Has the other improvements to the building envelope necessary to comply.~~

~~**EXCEPTION to Section 149 (b) 1 B:** Roof recoverings allowed by the CBC are not required to meet Section 149 (b) 1 B when all of the following occur:~~

~~1. The existing roof has a rock or gravel surface, and~~

~~2. The new roof has a rock or gravel surface, and~~

~~3. There is no removal of existing layers of roof coverings of more than 50% of the roof or more than 2,000 square feet of roof, whichever is less; and~~

~~4. There is no recoating with a liquid applied coating; and~~

~~5. There is no installation of a recover board, rigid insulation or other rigid, smooth substrate to separate and protect the new roof recovering from the existing roof.~~

For more details on the prescriptive requirements for alterations, see Sections 3.1, Overview (Building Envelope); 3.1.1, Prescriptive Requirements (Building Envelope); 3.2.2, Window Prescriptive Requirements; 3.2.3, Skylight Prescriptive Requirements; 3.3.2, Prescriptive Requirements (Opaque Envelope Insulation).

4. Mechanical Systems

4.1 Overview

The objective of the Standards requirements for mechanical systems is to reduce energy consumption while maintaining occupant comfort. These goals are achieved by:

1. Maximizing equipment efficiency, both at design conditions and during part load operation
2. Minimizing distribution losses of heating and cooling energy
3. Optimizing system control to minimize unnecessary operation and simultaneous use of heating and cooling energy

The Standards also recognize the importance of indoor air quality for occupant comfort and health. To this end, the Standards incorporate requirements for outdoor air ventilation that must be met during all operating conditions.

This chapter summarizes the requirements for space conditioning, ventilating, and service water heating systems. It is organized in 11 sections including this overview. The other sections are as follows:

1. Section **4.2~~Error! Reference source not found.~~**~~4.2~~ **Equipment Requirements~~Error! Reference source not found.~~**~~Equipment Requirements~~ addresses the requirements for HVAC and service water heating equipment efficiency and equipment mounted controls.
2. Section **0~~Error! Reference source not found.~~**~~4.3~~ **4.3 Ventilation Requirements~~Error! Reference source not found.~~**~~Ventilation Requirements~~ includes mechanical ventilation, natural ventilation and demand controlled ventilation.
3. Section **4.4~~Error! Reference source not found.~~**~~4.4~~ **Pipe and Duct Distribution System~~Error! Reference source not found.~~**~~Pipe and Duct Distribution System~~ covers construction and insulation of ducts and pipes, and duct sealing to reduce leakage.
4. Section **4.5~~Error! Reference source not found.~~**~~4.5~~ **HVAC System Control Requirements~~Error! Reference source not found.~~**~~HVAC System Control Requirements~~ covers control requirements for HVAC systems including zone controls, and controls to limit reheat and recooling.
5. Section **4.6~~Error! Reference source not found.~~**~~4.6~~ **HVAC System Requirements~~Error! Reference source not found.~~**~~HVAC System Requirements~~ covers the remaining

requirements for HVAC systems including sizing and equipment selection, load calculations, economizers, electric resistance heating limitation, limitation on air-cooled chillers, fan power consumption and fan and pump flow controls.

6. Section **0~~Error! Reference source not found.~~**~~4.7~~ **4.7 Service Water Heating~~Error! Reference source not found.~~**~~Service Water Heating~~ covers the remaining requirements for service water heating.
7. Section **0~~Error! Reference source not found.~~**~~4.8~~ **4.8 Performance Approach~~Error! Reference source not found.~~**~~Performance Approach~~ covers the performance method of compliance.
8. Section **0~~Error! Reference source not found.~~**~~4.9~~ **4.9 Additions and Alterations~~Error! Reference source not found.~~**~~Additions and Alterations~~.
9. Section **4.10~~Error! Reference source not found.~~**~~4.10~~ **Glossary/Reference~~Error! Reference source not found.~~**~~Glossary/Reference~~.
10. Section 4.11 **4.11 Mechanical Plan Check** Documents**~~Error! Reference source not found.~~**~~Mechanical Plan Check Documents~~ describes the information that must be included in the building plans and specifications to show compliance with the Standards, including a presentation and discussion of the mechanical compliance forms.
11. Section 4.12 **4.11.8 Mechanical Inspection~~Error! Reference source not found.~~**~~Mechanical Inspection~~ refers to the Inspection Checklist identifying the items that the inspector will verify in the field.

DRAFT

Acceptance requirements ~~are new to the 2005 Standards. They~~ apply at all times to the systems covered regardless of the path of compliance (for example an air side economizer, if provided, will always be tested even if it is not required for compliance). Chapter 10~~8~~ describes mandated acceptance test requirements which are summarized at the end of each section. The full acceptance requirements are in ~~§121, §122,~~ §125~~,~~ and in Reference Nonresidential Appendix NA7.~~NJ of the Non-Residential ACM Manual.~~

4.1.1 HVAC Energy Use

Mechanical systems are the second largest consumer of energy in most buildings, exceeded only by lighting. The proportion of space-conditioning energy consumed by various mechanical components varies according to system design and climate. For most buildings in non-mountainous California climates, fans and cooling equipment may be the largest consumer of energy. Space heating energy is usually less than fans and cooling, followed by service water heating.

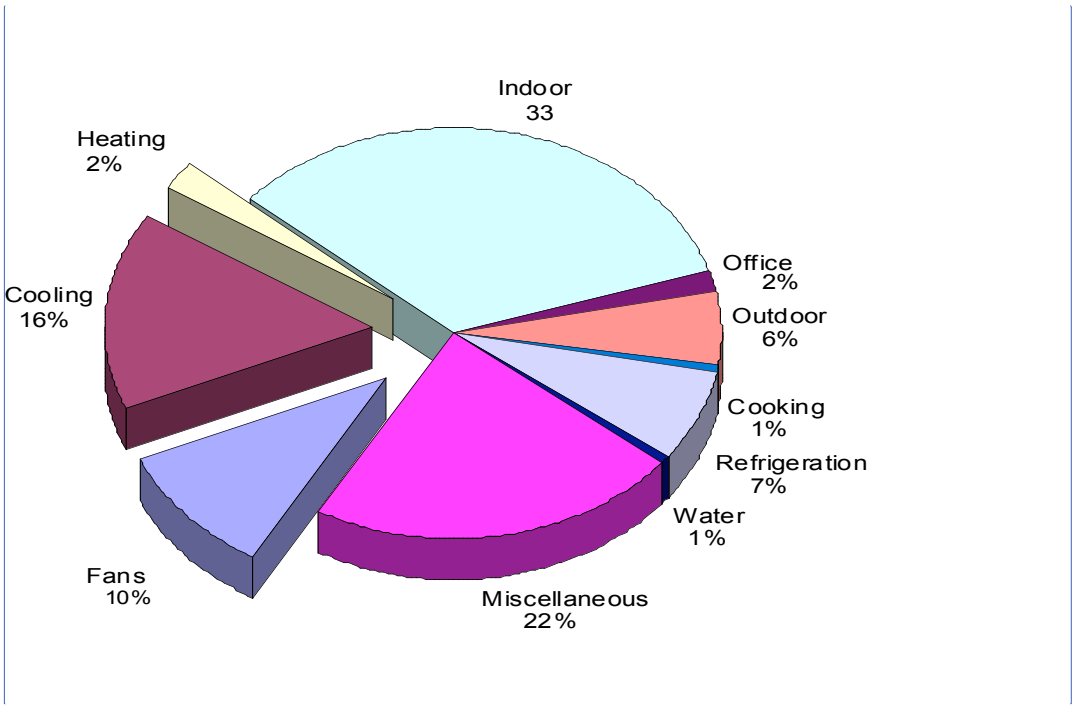

Figure 4-1– Typical Building Electricity Use
Heating, cooling and ventilation account for about 28% of commercial building electricity use in California. Source IEQ RFP, December 2002, California Energy Commission No. 500-02-501

4.1.2 Mandatory Measures

DRAFT

~~4.1.1 Compliance Approaches~~

~~After the mandatory measures are met, the Standards allow mechanical system compliance to be demonstrated through prescriptive or performance requirements.~~

~~Mandatory Measures~~

Mandatory measures (§110-119 and §120-129) apply to all systems, whether the designer chooses the prescriptive or performance approach to compliance. Mandatory measures include:

1. Certification of equipment efficiency (§110 and §111).
2. HVAC and service water heating equipment efficiencies (§112 and §113).
3. Service water heating and pool heating measures (§113 and §114).

~~3.~~

4. Ventilation requirements (§121).

5. Demand controlled ventilation ~~[~~§121(c)~~]~~.
6. Thermostats, shut-off control and night setback/setup (§122).
7. Area isolation (§122).
8. Pipe insulation (§123).
9. Duct construction and insulation (§124).

~~9. Pipe insulation (§123).~~

10. Acceptance tests (~~§121, §122,~~ §125 and Reference Nonresidential Appendix NA7).
11. Refrigerated Warehouses (§126).
12. ~~Indoor Lighting Controls (§119, §130, §131, §134).~~
13. ~~Outdoor Lighting Controls (§119, §130, §132, §134).~~
14. ~~Sign Lighting Controls (§133).~~

~~14. Service water heating and pool heating measures (§113 and §114).~~

4.1.3 Prescriptive and Performance Compliance Approaches

After the mandatory measures are met, the Standards allow mechanical system compliance to be demonstrated through prescriptive or performance requirements.

Prescriptive Requirements

Prescriptive measures cover items that can be used to qualify components and systems on an individual basis and are contained in §144. Prescriptive measures provide the basis for the Standards and are the prescribed set of measures to be installed in a building for the simplest approach to compliance. Prescriptive measures include:

1. Load calculations, sizing, system type and equipment selection [§144(a) and (b)].
2. Fan power consumption [§144(c)].
3. Controls to reduce reheating, recooling and mixing of conditioned air streams; [§144(d)].
4. Economizers [§144(e)].
5. Supply temperature reset [§144(f)].
6. Restrictions on electric-resistance heating [§144(g)].
7. Fan speed controls for heat rejection equipment [§144(h)].
8. Limitation on centrifugal fan cooling towers [§144(h)].
9. Limitation on air-cooled chillers [§144(i)].
10. Hydronic system design [§144(j)].

DRAFT

11. Duct sealing [§144(k)].
12. Variable air volume control for single zone systems [§144(l)]

Performance Approach

The performance approach (§141) allows the designer to increase the efficiency or effectiveness of selected mandatory and prescriptive measures, and to decrease the efficiency of other prescriptive measures. The performance approach requires the use of an Energy Commission certified computer program, and may only be used to model the performance of mechanical systems that are covered under the building permit application. (See SubsSection 4.8**0Error! Reference source not found.**1.8 and Chapter 7 for more detail.)

Note: Depending on the type(s) of equipment to be installed, energy performance credits associated with equipment efficiencies which are above the mandatory minimum values may be dependent on when the permit application is submitted. After the implementation date of these Standards (October 1, 2005), the Federal appliance standards will mandate increases in the efficiency of certain types of equipment according to the dates listed in the Appliance Efficiency Regulations.

DRAFT

4.2 Equipment Requirements

All of the equipment requirements are mandatory measures. There are no prescriptive requirements or acceptance requirements.

The mandatory requirements for mechanical equipment must be included in the system design whether compliance is shown by the prescriptive or the performance approach. These features have been shown to be cost effective over a wide range of building types and mechanical systems.

It is worth noting that most mandatory features for equipment efficiency are requirements for the manufacturer. It is the responsibility of the designer, however, to specify products in the building design that meet these requirements.

Mechanical equipment subject to the mandatory requirements must:

Be certified by the manufacturer as complying with the efficiency requirements as prescribed in:

1. §111 Appliances regulated by the Appliance Efficiency Regulations;
2. §112 Space Conditioning;
3. §113 Service Water Heating Systems and Equipment;
4. §114 Pool and Spa ~~Heating~~ Systems and Equipment;
5. §115 Pilot Lights Prohibited

Be specified and installed in accordance with:

1. §112 Requirements for Controls
2. §113 Installation Requirements
3. §121 Requirements for Ventilation;
4. §122 Required Controls for Space Conditioning Systems;
5. §123 Requirements for Pipe Insulation;
6. §124 Requirements for Ducts and Plenums.

DRAFT

4.1.4 Equipment Certification

§111-113

Mechanical equipment installed in a building subject to these regulations must be certified as meeting certain minimum efficiency and control requirements. These requirements are contained in §112 or §113. The AFUE, COP, EER, IPLV, combustion efficiency, and thermal efficiency values of all equipment must be determined using the applicable test method specified in the Standards.

1. Where more than one efficiency standard or test method is listed, the requirements of both shall apply. For example, water-cooled air conditioners have an EER requirement for full load operation and an IPLV for part load operation. The air conditioner must have both a rated EER and IPLV equal to or higher than that specified in the standard at the specified Air-Conditioning and Refrigeration Institute (ARI) standard rating conditions [§112(a)1 & 2 and §113(b)1 & 2].
2. Where equipment can serve more than one function, such as both heating and cooling, or space heating and water heating, it must comply with the requirements applicable to each function.
3. Where a requirement is for equipment rated at its "maximum rated capacity" or "minimum rated capacity," the capacity shall be as provided for and allowed by the controls during steady state operation. For example, a boiler with high/low firing must meet the efficiency requirements when operating at both its maximum capacity and minimum capacity [~~Section~~ §112(a)4 and §113(b)4].
4. Manufacturers of central air conditioners and heat pumps, room A/C, package terminal A/C, package terminal heat pumps, spot air conditioners, computer room air conditioners, central fan-type furnaces, gas space heaters, boilers, pool heaters and water heaters are regulated through the Title 20 Appliance Efficiency Regulations. Manufacturers must certify to the Energy Commission that their equipment meets or exceeds minimum standards.
5. Electric water-cooled centrifugal chillers that are not designed for operation at the ARI Standard 550/590-1998 test conditions of 44°F chilled water supply and 85°F condenser water supply and design condenser flow of 3 gpm/ton must comply with the modified efficiency levels in the Standards Tables 112-H, 112-I, and 112-J in the Standards for full-load operation and Standards Tables 112-K, 112-L, and 112-M for part-load operation. Many water-cooled centrifugal chillers designed for the moderate climates of California cannot operate stably at the ARI test conditions. For those cases the manufacturers shall provide ARI certified performance data at these adjusted conditions upon request.

Equipment not covered by the Appliance Efficiency Regulations is regulated by §112 and §113. ~~of the Standards.~~ To comply, equipment specified in the plans and specifications must meet the minimum standards mandated in that section. Manufacturers of equipment not regulated by the Appliance Efficiency Regulations are not required to certify their equipment to the Energy Commission; it is the responsibility of the designer and contractor to specify and install equipment that complies.

To verify certification, use one of the following options:

The Energy Commission's website includes listings of energy efficient appliances for several appliance types. The website address is http://www.energy.ca.gov/efficiency/appliances. The Energy Commission's Hotline staff can provide further assistance [1-800-772-3300 or (916) 654-5106] if not found on the website.

DRAFT

The complete appliance database can be downloaded. This requires spreadsheet programs compatible with Microsoft EXCEL. To use the data, a user must download the database file (or files), download a brand file and a manufacturer file and then decompress the files. Next, the user will need to download a description file that provides details on what is contained in each of the data fields. With these files, and using database software, the data can be sorted and manipulated.

The Air Conditioning and Refrigeration Institute (ARI) Directory of Certified Unitary Products and Directory of Certified Applied Air-Conditioning Products can be used to verify certification of air-conditioning equipment.

4.2.3 Furnace Standby Loss Controls

§112~~e~~(d)

Forced air gas- and oil-fired furnaces with input ratings ≥225,000 Btu/h are required to have controls and designs that limit their standby losses:

They must have either an intermittent ignition or interrupted device (IID). Standing pilot lights are not allowed.

They must have either power venting or a flue damper. A vent damper is an acceptable alternative to a flue damper for furnaces where combustion air is drawn from the conditioned space.

Any furnace with an input rating ≥225,000 Btu/h that is not located within the conditioned space must have jacket losses not exceeding 0.75 percent~~%~~ of the input rating. This includes electric furnaces as well as fuel-fired units.

DRAFT

4.2.3 Pilot Lights

§115

Pilot lights are prohibited in:

Pool and spa heaters [§115(c)(d)~~114(a)5~~].

Household cooking appliances unless the appliance does not have an electrical connection, and the pilot consumes less than 150 Btu/h [§115(b)].

Fan type central furnaces. This includes all space-conditioning equipment that distributes gas-heated

air through duct work [§115(a)]. This prohibition does not apply to radiant heaters, unit heaters, boilers or other equipment that does not use a fan to distribute heated air.

Example 4-1

Question

If a gas-pack with 15 tons cooling and 260,000 Btu/h maximum heating capacity has an EER = 9.6 and a heating efficiency of 78%, does it comply?

Answer

No. The cooling side complies because the EER exceeds the requirements of 9.5 for units without electric heat. The cooling requirements in Standards Table 112-A require an EER of 9.7 for units between 135 KBtuh and 240 KBtuh with electric resistance heat and footnote b reduces this to 9.5 for units with all other heating sections. With gas heat and an EER of 9.6 this unit complies. Note that the 0.2 deduction provided in the ~~efficiency~~Standards ~~t~~Tables 112-A and 112-B compensate for the higher fan power required to move air over the heat exchangers for fuel-fired heaters.

The heating efficiency must be at least 80% thermal efficiency; therefore the unit does not comply.

Example 4-2

Question

A 500,000 Btu/h gas-fired boiler with high/low firing has a full load combustion efficiency of 82%, 78% thermal efficiency and a low-fire combustion efficiency of 80%. Does the unit comply?

Answer

Yes. The combustion efficiency is at least 80% at both, the maximum- and minimum-rated capacity. The thermal efficiency must be greater than 75% as well.

Example 4-3

Question

A 300 ton centrifugal chiller is designed to operate at 44°F chilled water supply, 80°F condenser water supply and 3 gpm/ton condenser water flow, what is the required COP and IPLV?

Answer

As the chiller is centrifugal and is designed to operate at a condition different from ARI Standard 550/590, the appropriate efficiencies can be found in the Standards Tables 112-I (full load) and 112-L (part load). This chiller must have a COP greater than or equal to 5.97 at the design conditions and an IPLV greater than or equal to 6.37 at the design conditions.

DRAFT

Example 4-4

Question

A 300 ton centrifugal chiller is designed to operate at 45°F chilled water supply, 82°F condenser water supply and 94°F condenser water return, what is the required COP and IPLV?

Answer

As the chiller is centrifugal and is designed to operate at a condition different from ARI Standard 550/590, the appropriate efficiencies can be found in the Standards Tables 112-I (full load) and

112-L (part load). The conditions for this chiller are in between values in Standards Tables 112-I (full load) and 112-L (part load). The equation in the footnotes of the table can be used to find the required COP and IPLV as follows:

$LIFT=T_{cws}-T_{chws}=82°F -45°F =37°F$

Condenser $DT=T_{cwr}-T_{cws}=94°F -82°F =12°F$

X=LIFT+Condenser DT=37°F+12°F=49°F

K_{adj}=6.1507-0.30244*X + 0.0062692*(X^2) - 0.000045595*(X^3)=1.019

$COP_{adj}=K_{adj}*COP_{std}=1.019*5.55=5.66$

$IPLV_{adj}=K_{adj}*IPLV_{std}=1.019*5.90=6.01$

This chiller must have a COP greater than or equal to 5.66 and an IPLV greater than or equal to 6.01 at the design conditions. Note this number could also have been calculated through interpolation from precalculated table values.

Example 4-5

Question

Are all cooling towers required to be certified by CTI?

Answer

No. Per footnote c in Standards Table 112-G field erected cooling towers are not required to be certified. Factory assembled towers must either be CTI certified or have their performance verified in a field test (using ATC 105) by a CTI approved testing agency. Furthermore only base models need to be tested, options in the air-stream like access platforms or sound traps will derate the tower capacity by 90% of the capacity of the base model or the manufacturer's stated performance whichever is less.

DRAFT

Example 4-6

Question

What mandatory minimum efficiency does a low temperature chiller designed for ice-storage need to meet?

Answer

None. The ARI 550/590 standard only applies to conventional cooling; equipment operating between 44°F to 48°F of leaving chilled water supply temperatures. Ice storage systems must operate well below this and cannot be rated by this test standard. This is explicitly addressed in the Exception to §112(a). Note that this equipment may not be used for prescriptive compliance.

4.3 Ventilation Requirements

§121

All of the ventilation requirements are mandatory measures. Some measures require acceptance testing, which is addressed in Section 4.3.12

Within a building, all enclosed spaces that are normally used by humans must be continuously ventilated during occupied hours with outdoor air using either natural or mechanical ventilation [§121(a)1]. The Standards highly recommend that spaces that may have unusual sources of contaminants be designed with enclosures to contain the contaminants, and local exhaust systems to directly vent the contaminants outdoors [§121(a)1].

The designation and treatment of such spaces is subject to the designer's discretion. Spaces needing special consideration may include:

- Commercial and coin-operated dry cleaners.
- Bars and cocktail lounges.
- Smoking lounges and other designated smoking areas.
- Beauty and barbershops.
- Auto repair workshops.
- Print shops, graphic arts studios and other spaces where solvents are used in a process.
- Copy rooms, laser printer rooms or other rooms where it is expected that equipment may generate heavy concentrations of ozone or other contaminants.
- Blueprint machines.

Spaces normally used by humans" refers to spaces where people can be reasonably expected to remain for an extended period of time. Spaces where occupancy will be brief and intermittent, and that do not have any unusual sources of air contaminants, do not need to be directly ventilated. For example:

- A closet does not need to be ventilated provided it is not normally occupied.
- A storeroom that is only infrequently or briefly occupied does not require ventilation. However, a storeroom that can be expected to be occupied for extended periods for clean-up or inventory must be ventilated, preferably with systems controlled by a local switch so that the ventilation system operates only when the space is occupied.

"Continuously ventilated during occupied hours" implies that the design ventilation must be provided throughout the entire occupied period. This means that VAV systems must provide the code required ventilation over their full range of operating supply airflow. Some means of dynamically controlling the

DRAFT

minimum ventilation air must be provided. This requirement is part of the acceptance testing that is described in 4.3.12.

4.3.1 Natural Ventilation

§121(b)1

Natural outdoor ventilation may be provided for spaces where all normally occupied areas of the space are within a specific distance from an operable wall or roof opening through which outdoor air can flow. This distance is 20 ft. for most spaces and 25 ft. for hotel/motel guestrooms and high-rise residential spaces. The sum of the operable open areas must total at least 5 percent~~%~~ of the floor area of each space that is naturally ventilated. The openings must also be readily accessible to the occupants of the space at all times.

Airflow through the openings must come directly from the outdoors; air may not flow through any intermediate spaces such as other occupied spaces, unconditioned spaces, corridors, or atriums. High windows or operable skylights need to have a control mechanism accessible from the floor.

Example 4-7~~1~~

Question

What is the window area required to ventilate a 30 ft. x 32 ft. classroom?

Answer

In order for all points to be within 20 ft. of an opening, windows must be distributed and run at least along two of the opposite walls. The area of the openings must be:

(32 ft. x 30 ft.) x 5% = 48 ft²

The actual window area must be at least 96 ft² if only half the window can be open at a time.

Calculations must be based on free area, taking into account framing and bug screens; the actual window area is approximately 100 ft² without bug screens and 110 ft^2 with bug screens.

Example 4-8~~2~~

Question

Naturally ventilated classrooms are located on either side of a doubly-loaded corridor and transoms are provided between the classrooms and corridor. Can the corridor be naturally ventilated through the classrooms?

Answer

No. The corridor cannot be naturally ventilated through the classrooms and transom openings. The Standards require that naturally ventilated spaces have direct access to properly sized openings to the outdoors. The corridor would require mechanical ventilation using either supply or exhaust fans.

DRAFT

4.3.2 Mechanical Ventilation

§121(b)2 and (d)

Mechanical outdoor ventilation must be provided for all spaces normally occupied that are not naturally ventilated. The Standards require that a space conditioning system provide outdoor air equal to or exceeding the ventilation rates required for each of the spaces that it serves. At the space, the required ventilation can be provided either directly through supply air or indirectly through transfer of air from the plenum or an adjacent space. The required minimum ventilation airflow at the space can be provided by an equal quantity of supply or transfer air. At the air-handling unit the minimum outside air must be the sum of the ventilation requirements of each of the spaces that it serves. The designer may specify higher outside air ventilation rates based on the owner's preference or specific ventilation needs associated with the space. However, specifying more ventilation air than the minimum allowable ventilation rates increases energy consumption and electrical peak demand and increases the costs of operating the HVAC equipment. Thus the designer should have a compelling reason to specify higher design minimum outside air rates than the calculated minimum outside air requirements in the standards.

In summary:

1. Ventilation compliance at the space is satisfied by providing supply and/or transfer air.
2. Ventilation compliance at the unit is satisfied by providing, at minimum, the outdoor air that represents the sum of the ventilation requirements at each space that it serves.

DRAFT

For each *space* requiring mechanical ventilation the ventilation rates must be the greater of either:

1. The conditioned floor area of the space, multiplied by the applicable minimum ventilation rate from the Standards in Table 121-A. This provides dilution for the building borne contaminants like off gassing of paints and carpets.
2. 15 cfm per person, multiplied by the expected number of occupants. For spaces with fixed seating (such as a theater or auditorium) the expected number of occupants is the number of fixed seats. For spaces without fixed seating, the expected number of occupants is assumed to be no less than one-half that determined for egress purposes in the ~~2001~~ California Building Code (CBC)~~ in Chapter 10~~. The Standards specify the minimum outdoor ventilation rate to which the system must be designed. If desired, the designer may, with documentation, elect to provide more ventilation air. For example, the design outdoor ventilation rate may be determined using the procedures described in ASHRAE 62, provided the resulting outdoor air quantities are no less than required by the Standards.

Section 4.3.12 describes mandated acceptance test requirements for ventilation air.

Table 4-1~~Table 4-1~~ shows the typical maximum occupant loads for various building uses upon which minimum ventilation calculations are based). This provides dilution for the occupant borne contaminants (or bioeffluents) like body odor and germs.

Table 4-2~~Table 4-2~~ summarizes the combination of these two rates for typical spaces.

As previously stated, each space-conditioning system must provide outdoor ventilation air as follows. It should be noted that systems employing demand controlled ventilation as approved by the Energy Commission may provide lower quantities of ventilation air during periods of low occupancy:

1. For a space-conditioning system serving a single space, the required system outdoor airflow is equal to the design outdoor ventilation rate of the space.
2. For a space-conditioning system serving multiple spaces, the required outdoor air quantity delivered by the space-conditioning system must be not less than the sum of the required outdoor ventilation rate to each space. The Standards do not require that each space actually receive its calculated outdoor air quantity [§121(b)2 Exception.] Instead, the actual supply to any given space may be any combination of recirculated air, outdoor air, or air transferred directly from other spaces, provided:
    a. *The total amount of outdoor air delivered by the space-*conditioning system(s) to all spaces is at least as large as the sum of the space design quantities
    b. Each space always receives a supply airflow, including recirculated air and/or transfer air, no less than the calculated outdoor ventilation rate
    c. When using transfer air, none of the spaces from which air is transferred has any unusual sources of contaminants

The Standards specify the minimum outdoor ventilation rate to which the system must be designed. If desired, the designer may, with documentation, elect to provide more ventilation air. For example, the design outdoor ventilation rate may be determined using the procedures described in ASHRAE 62, provided the resulting outdoor air quantities are no less than required by the Standards.

Section 0~~4.3.12~~ describes mandated acceptance test requirements for ventilation air.

DRAFT

Table 4-1 – CBC ~~2001~~ Occupant Densities (ft² /person)
Source Table 104.1.1 of the California Building Code

Function of Space	ft²/occupant
Accessory storage areas, mechanical equipment room	300 gross
Agricultural building	300 gross
Aircraft	500 gross
Airport Terminal	-
Baggage claim	20 gross
Baggage handling	300 gross
Concourse	100 gross
Waiting area	15 gross
Assembly	-
Gaming floors (keno, slots, etc)	11 gross
Assembly with fixed seats	See Section 1004.7
Assembly without fixed seats	-
Concentrated (chairs only – not fixed)	7 net
Standing space	5 net
Unconcentrated (tables and chairs)	15 net
Bowling centers, allow 5 persons for each lane including 15 feet of runway, for additional areas	7 net
Business areas	100 gross
Courtrooms – other than fixed seating areas	40 net
Day care	35 net
Dormitories	50 gross
Educational	-
Classroom area	20 net
Shops and other vocational room areas	50 net
Exercise Rooms	50 gross
H-5 Fabrication and manufacturing areas	200 gross
Industrial areas	100 gross
Institutional areas	-
Impatient treatment areas	240 gross
Outpatient areas	100 gross
Sleeping areas	120 gross
Kitchens, commercial	200 gross
Library	-
Reading rooms	50 net
Stack area	100 gross
Locker rooms	50 gross
Mercantile	-
Area on other floors	60 gross
Basement and grade floor areas	30 gross
Storage, stock, shipping areas	300 gross
Parking garages	200 gross
Residential	200 gross
Skating rinks, swimming pools	-

DRAFT

Rink and pool	50 gross
Decks	15 gross
Stages and platforms	15 net
Warehouses	500 gross

DRAFT

TABLE 1004.1.1
MAXIMUM FLOOR AREA ALLOWANCES PER OCCUPANT

FUNCTION OF SPACE	FLOOR AREA IN SQ. FT. PER OCCUPANT
Accessory storage areas, mechanical equipment room	300 gross
Agricultural building	300 gross
Aircraft hangars	500 gross
Airport terminal Baggage claim Baggage handling Concourse Waiting areas	 20 gross 300 gross 100 gross 15 gross
Assembly Gaming floors (keno, slots, etc.)	 11 gross
Assembly with fixed seats	See Section 1004.7
Assembly without fixed seats Concentrated (chairs only—not fixed) Standing space Unconcentrated (tables and chairs)	 7 net 5 net 15 net
Bowling centers, allow 5 persons for each lane including 15 feet of runway, and for additional areas	7 net
Business areas	100 gross
Courtrooms—other than fixed seating areas	40 net
Day care	35 net
Dormitories	50 gross
Educational Classroom area Shops and other vocational room areas	 20 net 50 net
Exercise rooms	50 gross
H-5 Fabrication and manufacturing areas	200 gross
Industrial areas	100 gross
Institutional areas Inpatient treatment areas Outpatient areas Sleeping areas	 240 gross 100 gross 120 gross
Kitchens, commercial	200 gross
Library Reading rooms Stack area	 50 net 100 gross
Locker rooms	50 gross
Mercantile Areas on other floors Basement and grade floor areas Storage, stock, shipping areas	 60 gross 30 gross 300 gross
Parking garages	200 gross
Residential	200 gross
Skating rinks, swimming pools Rink and pool Decks	 50 gross 15 gross
Stages and platforms	15 net
Warehouses	500 gross

For SI: 1 square foot = 0.0929 m^2

DRAFT

Where :

FLOOR AREA, GROSS. The floor area within the inside perimeter of the exterior walls of the building under consideration, exclusive of vent shafts and courts, without deduction for corridors, stairways, closets, the thickness of

interior walls, columns or other features. The floor area of a building, or portion thereof, not provided with surrounding exterior walls shall be the usable area under the horizontal projection of the roof or floor above. The gross floor area shall not include shafts with no openings or interior courts.

FLOOR AREA, NET. The actual occupied area not including unoccupied accessory areas such as corridors, stairways, toilet rooms, mechanical rooms and closets.

~~Use / Application~~	~~Occupant Load Factor~~	~~Use / Application~~	~~Occupant Load Factor~~
~~Aircraft Hangars~~	~~500~~	~~Courtrooms~~	~~40~~
~~Auction Room~~	~~7~~	~~Dormitories~~	~~50~~
~~Assembly Areas~~		~~Dwellings~~	~~300~~
~~—Auditoriums~~	~~7~~	~~Garage Parking~~	~~200~~
~~—Churches/Chapels~~	~~7~~	~~Healthcare Facilities~~	
~~—Lobbies~~	~~7~~	~~—Sleeping Rooms~~	~~120~~
~~—Lodge Rooms~~	~~7~~	~~—Treatment Rooms~~	~~240~~
~~—Reviewing Stands~~	~~7~~	~~Hotel/Apartments~~	~~200~~
~~—Stadiums~~	~~7~~	~~Kitchens - Commercial~~	~~200~~
~~—Waiting Areas~~	~~3~~	~~Library~~	
~~—Conference Room~~	~~15~~	~~—Reading Rooms~~	~~50~~
~~—Dining Rooms~~	~~15~~	~~—Stack Areas~~	~~100~~
~~—Drinking Rooms~~	~~15~~	~~Locker Room~~	~~50~~
~~—Exhibit Rooms~~	~~15~~	~~Malls~~	~~(see UBC chpt.4)~~
~~—Gymnasiums~~	~~15~~	~~Manufacturing Areas~~	~~200~~
~~—Lounges~~	~~15~~	~~Mechanical Equipment Rooms~~	~~300~~
~~—Stages~~	~~15~~	~~Day Care~~	~~35~~
~~Gaming: Keno, Slot Machine and Live Games Area~~	~~11~~	~~Offices~~	~~100~~
		~~School Shops/Vocational Rooms~~	~~50~~
~~Bowling Alley (assume no occupants for lanes)~~	~~5/alley+15ft runway~~	~~Skating Rinks~~	~~50 Skate Area & 15 on Deck~~
~~Children's Home~~	~~80~~	~~Storage/Stock Rooms~~	~~300~~
~~Home for Aged~~	~~80~~	~~Stores—Retail Sales Room~~	
~~Classrooms~~	~~20~~	~~—Basements and Ground Floor~~	~~30~~
~~Congregate Residences~~	~~200~~	~~—Upper Floors~~	~~60~~
~~(Accommodating 10 or less persons and having an area of 3,000 ft^2 or less)~~		~~Swimming Pools~~	~~50 Pool Area & 15 on Deck~~
		~~Warehouses~~	~~500~~
		~~All Others~~	~~100~~

DRAFT

Table 4-22 – Required Minimum Ventilation Rate Per Occupancy

	Occupancy	Use	CBC Occupancy Load (ft²/occ)	CBC Occupancy Load (occ/1000 ft²)	CBC Based Ventilation (cfm/ft²)	Ventilation from Table 121-A (cfm/ft²)	Required Ventilation (larger of Title 24 or CBC) (cfm/ft²)
1)	Aircraft Hangars		500	2	0.02	0.15	0.15
2)	Auction Rooms		See Section 1004.7			0.15	n.a.
3)	Assembly Areas (Concentrated Use)						
		Auditoriums	See Section 1004.7			0.15	n.a.
		Bowling Alleys	5 persons per lane			0.15	n.a.
		Churches & Chapels (Religious Worship)	7	143	1.07	0.15	1.07
		Dance Floors	5	200	1.50	0.15	1.50
		Lobbies	15	67	0.50	0.15	0.50
		Lodge Rooms	7	143	1.07	0.15	1.07
		Reviewing Stands	15	67	0.50	0.15	0.50
		Stadiums	See Section 1004.7			0.15	n.a.
		Theaters - All	See Section 1004.7			0.15	n.a.
		Waiting Areas	15	67	0.50	0.15	0.50
4)	Assembly Areas (Nonconcentrated Use)		15	67	0.50	0.15	0.50
		Conference & Meeting Rooms (1)	15	67	0.50	0.15	0.50
		Dining Rooms/Areas	15	67	0.50	0.15	0.50
		Drinking Establishments (2)	15	67	0.50	0.2	0.50
		Exhibit/Display Areas	15	67	0.50	0.15	0.50
		Gymnasiums/Sports Arenas	15	67	0.50	0.15	0.50
		Lounges	15	67	0.50	0.2	0.50
		Stages	15	67	0.50	1.5	1.50
		Gaming, Keno, Slot Machine and Live Games Areas	11	91	0.68	0.2	0.68
5)	Auto Repair Workshops		100	10	0.08	1.5	1.50
6)	Barber & Beauty Shops		100	10	0.08	0.4	0.40
7)	Children's Homes & Homes for Aged		120	8	0.06	0.15	0.15
8)	Classrooms		20	50	0.38	0.15	0.38
9)	Courtrooms		40	25	0.19	0.15	0.19
10)	Dormitories		50	20	0.15	0.15	0.15
11)	Dry Cleaning (Coin-Operated)		100	10	0.08	0.3	0.30
12)	Dry Cleaning (Commercial)		100	10	0.08	0.45	0.45
13)	Garage, Parking		200	5	0.04	0.15	0.15
14)	Healthcare Facilities:	Sleeping Rooms	120	8	0.06	0.15	0.15
		Treatment Rooms	240	4	0.03	0.15	0.15
15)	Hotels and Apartments		200	5	0.04	0.15	0.15
		Hotel Function Area (3)	7	143	1.07	0.15	1.07
		Hotel Lobby	100	10	0.08	0.15	0.15
		Hotel Guest Rooms (<500 ft²)	200	5	0.04	Footnote 4	n.a.

DRAFT

		Hotel Guest rooms (>=500 ft²)	200	5	0.04	0.15	0.15
		Highrise Residential	200	5	0.04	Footnote 5	n.a.
16)	Kitchen(s)		200	5	0.04	0.15	0.15
17)	Library:	Reading Rooms	50	20	0.15	0.15	0.15
		Stack Areas	100	10	0.08	0.15	0.15
18)	Locker Rooms		50	20	0.15	0.15	0.15
19)	Manufacturing		200	5	0.04	0.15	0.15
20)	Mechanical Equipment Room		300	3	0.03	0.15	0.15
21)	Nurseries for Children - Day Care		35	29	0.21	0.15	0.21
22)	Offices:	Office	100	10	0.08	0.15	0.15
		Bank/Financial Institution	100	10	0.08	0.15	0.15
		Medical & Clinical Care	100	10	0.08	0.15	0.15
23)	Retail Stores (See Stores)						n.a.
24)	School Shops & Vocational Rooms		50	20	0.15	0.15	0.15
25)	Skating Rinks:	Skate Area	50	20	0.15	0.15	0.15
		On Deck	15	67	0.50	0.15	0.50
26)	Stores:	Retail Sales, Wholesale Showrooms	30	33	0.25	0.2	0.25
		Basement and Ground Floor	30	33	0.25	0.2	0.25
		Upper Floors	60	17	0.13	0.2	0.20
		Grocery	30	33	0.25	0.2	0.25
		Malls, Arcades, & Atria	30	33	0.25	0.2	0.25
27)	Swimming Pools:	Pool Area	50	20	0.15	0.15	0.15
		On Deck	15	67	0.50	0.15	0.50
28)	Warehouses, Industrial & Commercial Storage/Stockrooms		500	2	0.02	0.15	0.15
29)	All Others -- Including Unknown		100	10	0.08	0.15	0.15
		Corridors, Restrooms, & Support Areas	100	10	0.08	0.15	0.15
		Commercial & Industrial Work	100	10	0.08	0.15	0.15

Footnotes:

1) Convention, Conference, Meeting Rooms

2) Bars, Cocktail & Smoking Lounges, Casinos

3) See Conference Rooms or Dining Rooms

4) Guestrooms less than 500 ft² use 30 cfm/guestroom

5) Highrise Residential See 1994 UBC Section 1203 Ventilation

Equations used to find:

$$\text{Number of People per 1,000 ft2} = \frac{1000}{\text{ft2 / occupant}}$$

$$\text{CBC Based Ventilation (cfm / ft2)} = 15\,\text{cfm} \times \frac{\left(\frac{\text{Occupants per 1000 ft2}}{1000}\right)}{2}$$

DRAFT

~~Occupancy / Use~~	~~CBC Table No. 10-A~~		~~Choose Largest~~		
	~~ft^2/Occupant~~	~~Number of People per 1000 ft^2~~	~~Ventilation CEC STD Table 121-A cfm/ft^2~~	~~CBC Based Ventilation cfm/ft^2~~	~~Req. Vent cfm/ft^2 (largest)~~
~~1) Aircraft Hangars~~	~~500~~	~~2~~	~~0.15~~	~~0.02~~	~~0.15~~
~~2) Auction Rooms~~	~~7.0~~	~~143~~	~~0.15~~	~~1.07~~	~~1.07~~
~~3) Assembly Areas (Concentrated Use)~~					
~~Auditoriums~~	~~7.0~~	~~143~~	~~0.15~~	~~1.07~~	~~1.07~~
~~Bowling Alleys~~	~~4.0~~	~~250~~	~~0.15~~	~~1.88~~	~~1.88~~
~~Churches & Chapels (Religious Worship)~~	~~7.0~~	~~143~~	~~0.15~~	~~1.07~~	~~1.07~~
~~Dance Floors~~	~~7.0~~	~~143~~	~~0.15~~	~~1.07~~	~~1.07~~
~~Lobbies~~	~~7.0~~	~~143~~	~~0.15~~	~~1.07~~	~~1.07~~
~~Lodge Rooms~~	~~7.0~~	~~143~~	~~0.15~~	~~1.07~~	~~1.07~~
~~Reviewing Stands~~	~~7.0~~	~~143~~	~~0.15~~	~~1.07~~	~~1.07~~
~~Stadiums~~	~~7.0~~	~~143~~	~~0.15~~	~~1.07~~	~~1.07~~
~~Theaters - All~~	~~7.0~~	~~143~~	~~0.15~~	~~1.07~~	~~1.07~~
~~Waiting Areas~~	~~3.0~~	~~333~~	~~0.15~~	~~2.50~~	~~2.50~~
~~4) Assembly Areas (Nonconcentrated Use)~~	~~15.0~~	~~67~~	~~0.15~~	~~0.50~~	~~0.50~~
~~Conference & Meeting Rooms (1)~~	~~15.0~~	~~67~~	~~0.15~~	~~0.50~~	~~0.50~~
~~Dining Rooms/Areas~~	~~15.0~~	~~67~~	~~0.15~~	~~0.50~~	~~0.50~~
~~Drinking Establishments (2)~~	~~15.0~~	~~67~~	~~0.20~~	~~0.50~~	~~0.50~~
~~Exhibit/Display Areas~~	~~15.0~~	~~67~~	~~0.15~~	~~0.50~~	~~0.50~~
~~Gymnasiums/Sports Arenas~~	~~15.0~~	~~67~~	~~0.15~~	~~0.50~~	~~0.50~~
~~Lounges~~	~~15.0~~	~~67~~	~~0.20~~	~~0.50~~	~~0.50~~
~~Stages~~	~~15.0~~	~~67~~	~~1.50~~	~~0.50~~	~~1.50~~
~~Gaming, Keno, Slot Machine and Live Games Areas~~	~~11.0~~	~~91~~	~~0.20~~	~~0.68~~	~~0.68~~
~~5) Auto Repair Workshops~~	~~100.0~~	~~10~~	~~1.50~~	~~0.08~~	~~1.50~~
~~6) Barber & Beauty Shops~~	~~100.0~~	~~10~~	~~0.40~~	~~0.08~~	~~0.40~~
~~7) Children's Homes & Homes for Aged~~	~~80.0~~	~~13~~	~~0.15~~	~~0.09~~	~~0.15~~
~~8) Classrooms~~	~~20.0~~	~~50~~	~~0.15~~	~~0.38~~	~~0.38~~
~~9) Courtrooms~~	~~40.0~~	~~25~~	~~0.15~~	~~0.19~~	~~0.19~~
~~10) Dormitories~~	~~50.0~~	~~20~~	~~0.15~~	~~0.15~~	~~0.15~~
~~11) Dry Cleaning (Coin-Operated)~~	~~100.0~~	~~10~~	~~0.30~~	~~0.08~~	~~0.30~~
~~12) Dry Cleaning (Commercial)~~	~~100.0~~	~~10~~	~~0.45~~	~~0.08~~	~~0.45~~
~~13) Garage, Parking~~	~~200.0~~	~~5~~	~~0.15~~	~~0.04~~	~~0.15~~
~~14) Healthcare Facilities: Sleeping Rooms~~	~~120.0~~	~~8~~	~~0.15~~	~~0.06~~	~~0.15~~
~~Treatment Rooms~~	~~240.0~~	~~4~~	~~0.15~~	~~0.03~~	~~0.15~~
~~15) Hotels and Apartments~~	~~200.0~~	~~5~~	~~0.15~~	~~0.04~~	~~0.15~~

DRAFT

~~Occupancy / Use~~	~~CBC Table No. 10-A~~		~~Choose Largest~~		
	~~ft^2/Occupant~~	~~Number of People per 1000 ft^2~~	~~Ventilation CEC STD Table 121-A cfm/ft^2~~	~~CBC Based Ventilation cfm/ft^2~~	~~Req. Vent cfm/ft^2 (largest)~~
~~Hotel Function Area (3)~~	~~15.0~~	~~67~~	~~0.15~~	~~0.50~~	~~0.50~~
~~Hotel Lobby~~	~~100.0~~	~~10~~	~~0.15~~	~~0.08~~	~~0.15~~
~~Hotel Guest Rooms (<500 ft^2)~~	~~200.0~~	~~5~~	~~Footnote 4~~	~~Footnote 4~~	~~Footnote 4~~
~~Hotel Guest rooms (>=500 ft^2)~~	~~200.0~~	~~5~~	~~0.15~~	~~0.04~~	~~0.15~~
~~Highrise Residential~~	~~200.0~~	~~5~~	~~Footnote 5~~	~~Footnote 5~~	~~Footnote 5~~
~~16) Kitchen(s)~~	~~200.0~~	~~5~~	~~0.15~~	~~0.04~~	~~0.15~~
~~17) Library: Reading Rooms~~	~~50.0~~	~~20~~	~~0.15~~	~~0.15~~	~~0.15~~
~~Stack Areas~~	~~100.0~~	~~10~~	~~0.15~~	~~0.08~~	~~0.15~~
~~18) Locker Rooms~~	~~50.0~~	~~20~~	~~0.15~~	~~0.15~~	~~0.15~~
~~19) Manufacturing~~	~~200.0~~	~~5~~	~~0.15~~	~~0.04~~	~~0.15~~
~~20) Mechanical Equipment Room~~	~~300.0~~	~~3~~	~~0.15~~	~~0.03~~	~~0.15~~
~~21) Nurseries for Children – Day Care~~	~~50.0~~	~~20~~	~~0.15~~	~~0.15~~	~~0.15~~
~~22) Offices: Office~~	~~100.0~~	~~10~~	~~0.15~~	~~0.08~~	~~0.15~~
~~Bank/Financial Institution~~	~~100.0~~	~~10~~	~~0.15~~	~~0.08~~	~~0.15~~
~~Medical & Clinical Care~~	~~100.0~~	~~10~~	~~0.15~~	~~0.08~~	~~0.15~~
~~23) Retail Stores (See Stores)~~					
~~24) School Shops & Vocational Rooms~~	~~50.0~~	~~20~~	~~0.15~~	~~0.15~~	~~0.15~~
~~25) Skating Rinks: Skate Area~~	~~50.0~~	~~20~~	~~0.15~~	~~0.15~~	~~0.15~~
~~On Deck~~	~~15.0~~	~~67~~	~~0.15~~	~~0.50~~	~~0.50~~
~~26) Stores: Retail Sales, Wholesale Showrooms~~	~~30.0~~	~~33~~	~~0.20~~	~~0.25~~	~~0.25~~
~~Basement and Ground Floor~~	~~30.0~~	~~33~~	~~0.20~~	~~0.25~~	~~0.25~~
~~Upper Floors~~	~~60.0~~	~~17~~	~~0.20~~	~~0.13~~	~~0.20~~
~~Grocery~~	~~30.0~~	~~33~~	~~0.20~~	~~0.25~~	~~0.25~~
~~Malls, Arcades, & Atria~~	~~30.0~~	~~33~~	~~0.20~~	~~0.25~~	~~0.25~~
~~27) Swimming Pools: Pool Area~~	~~50.0~~	~~20~~	~~0.15~~	~~0.15~~	~~0.15~~
~~On Deck~~	~~15.0~~	~~67~~	~~0.15~~	~~0.50~~	~~0.50~~
~~28) Warehouses, Industrial & Commercial Storage/Stockrooms~~	~~500.0~~	~~2~~	~~0.15~~	~~0.02~~	~~0.15~~
~~29) All Others – Including Unknown~~	~~100.0~~	~~10~~	~~0.15~~	~~0.08~~	~~0.15~~
~~Corridors, Restrooms, & Support Areas~~	~~100.0~~	~~10~~	~~0.15~~	~~0.08~~	~~0.15~~

DRAFT

~~Occupancy / Use~~	~~CBC Table No. 10-A~~		~~Choose Largest~~		
	~~ft^2/Occupant~~	~~Number of People per 1000 ft^2~~	~~Ventilation CEC STD Table 121-A cfm/ft^2~~	~~CBC Based Ventilation cfm/ft^2~~	~~Req. Vent cfm/ft^2 (largest)~~
~~Commercial & Industrial Work~~	~~100.0~~	~~10~~	~~0.15~~	~~0.08~~	~~0.15~~
~~*Footnotes:*~~	~~*Equations used to find:*~~				
~~*1) Convention, Conference, Meeting Rooms*~~ ~~*2) Bars, Cocktail & Smoking Lounges, Casinos*~~	~~*1)*~~	~~*Number of People per 1000sf =*~~ $\frac{1000}{\text{Sf/Occupant}}$			
~~*3) See Conference Rooms or Dining Rooms*~~ ~~*4) Guestrooms less than 500 ft^2 use 30 cfm/guestroom*~~ ~~*5) Highrise Residential See 1994 UBC Section 1203 Ventilation*~~	~~*2)*~~	~~*UBC Based Ventilation cfm/ft^2 =*~~ $\left(\frac{\frac{\text{Number of People per 1000sf}}{1000}}{2}\right)\times 15$ ~~*cfm*~~			

Example 4-9~~3~~

Question

Ventilation for a two-room building:

Consider a building with two spaces, each having an area of 1,000 ft^2. One space is used for general administrative functions, and the other is used for classroom training. It is estimated that the office will contain seven people, and the classroom will contain 50 (fixed seating). What are the required outdoor ventilation rates?

Answer

1. For the office area, the design outdoor ventilation air is the larger of:

   7 people x 15 cfm/person = 105 cfm

   or

   1,000 ft^2 x 0.15 cfm/ft^2 = 150 cfm

   For this space, the design ventilation rate is 150 cfm.

2. For the classroom, the design outdoor ventilation air is the larger of:

   50 people x 15 cfm/person = 750 cfm

   or

   1,000 ft^2 x 0.15 cfm/ft^2 = 150 cfm

   For this space the design ventilation rate is 750 cfm.

Assume the total supply air necessary to satisfy cooling loads is 1000 cfm for the office and 1,500 cfm for the classroom. If each space is served by a separate system, then the required outdoor ventilation rate of each system is 150 cfm and 750 cfm, respectively. This corresponds to a 15% outside air (OA) fraction in the office HVAC unit, and 50% in the classroom unit.

DRAFT

If both spaces are served by a central system, then the total supply will be (1,000 + 1,500) cfm = 2500 cfm. The required outdoor ventilation rate is (150 + 750) = 900 cfm total. The actual outdoor air ventilation rate for each space is:

Office OA = 900 cfm x (1,000 cfm / 2,500 cfm) = 360 cfm

Classroom OA = 900 cfm x (1,500 cfm / 2,500 cfm) = 540 cfm

While this simplistic analysis suggests that the actual OA cfm to the classroom is less than design (540 cfm vs. 750 cfm), the analysis does not take credit for the dilution effect of the air recirculated from the office. The office is over-ventilated (360 cfm vs. 150 cfm) so the concentration of pollutants in the office return air is low enough that it can be used, along with the 540 cfm of outdoor air, to dilute pollutants in the classroom. The Standards allow this design provided that the system always delivers at least 750 cfm to the classroom (including transfer or recirculated air), and that any transfer air is free of unusual contaminants.

4.3.3 Direct Air Transfer

The Standards allow air to be directly transferred from other spaces in order to meet a part of the ventilation supply to a space, provided the total outdoor quantity required by all spaces served by the building's ventilation system is supplied by the mechanical systems. This method can be used for any space, but is particularly applicable to conference rooms, toilet rooms, and other rooms that have high ventilation requirements. Transfer air must be free from any unusual contaminants, and as such should not be taken directly from rooms where such sources of contaminants are anticipated. It is typically taken from the return plenum or directly from an adjacent space.

Air may be transferred using any method that ensures a positive airflow. Examples include dedicated transfer fans, exhaust fans and fan-powered VAV boxes. A system having a ducted return may be balanced so that air naturally transfers into the space. Exhaust fans serving the space may discharge directly outdoors, or into a return plenum. Transfer systems should be designed to minimize recirculation of transfer air back into the space; duct work should be arranged to separate the transfer air intake and return points.

When each space in a two-space building is served by a separate constant volume system, the calculation and application of ventilation rate is straightforward, and each space will always receive its design outdoor air quantity. However, a central system serving both spaces does not deliver the design outdoor air quantity to each space. Instead, one space receives more than its allotted share, and the other less. This is because the training room has a higher design outdoor ventilation rate and/or a lower cooling load relative to the other space.

4.3.4 Distribution of Outdoor Air to Zonal Units

§121(d)

When a return plenum is used to distribute outside air to a zonal heating or cooling unit, the outside air supply must be connected either:

1. Within ~~five~~five~~5~~ ft. of the unit; or

2. Within 15 ft. of the unit, with the air directed substantially toward the unit, and with a discharge velocity of at least 500 ft. per minute.

Water source heat pumps and fan coils are the most common application of this configuration. The unit fans should be controlled to run continuously during occupancy in order for the ventilation air to be circulated to the occupied space.

A central space-conditioning system(s) augmented by a few zonal units for spot conditioning may use transfer air from spaces served by the central system. A direct source of outdoor air is not required for each zonal unit. Similarly, transfer air may be used in buildings having central interior space-conditioning systems with outdoor air, and zonal units on the perimeter (without outdoor air).

While not required, the Standards recommend that sources of unusual contaminants be controlled through the use of containment systems that capture the contaminants and discharge them directly outdoors. Such systems may include exhaust hoods, fume hoods, small space exhausts and differential pressure control between spaces. The designer is advised to consult ASHRAE standards or other publications for guidance in this subject.

4.3.5 Ventilation System Operation and Controls

§121(c) ~~& §121(f)~~

Outdoor Ventilation Air and VAV Systems

Except for systems employing Energy Commission-certified demand controlled ventilation (DCV) devices, the Standards require that the minimum rate of outdoor air calculated per §121(b)2 be provided to each space *at all times* when the space is normally occupied [§121(c)1]. For spaces served by variable air volume (VAV) systems, this means that the minimum supply setting of each VAV box should be no less than the design outdoor ventilation rate calculated for the space, unless transfer air is used. If transfer air is used, the minimum box position, plus the transfer air, must meet the minimum ventilation rate. If transfer air is not used, the box must be controlled so that the minimum required airflow is maintained at all times (unless demand controlled ventilation is employed).

The design outdoor ventilation rate at the system level must always be maintained when the space is occupied, even when the fan has modulated to its minimum capacity [§121(c)1]. Section 0~~4.3.12~~ describes mandated acceptance test requirements for outside air ventilation in VAV air handling systems. In these tests, the minimum outside air in VAV systems will be measured both at full flow and with all boxes at minimum position.

Figure 4-2~~Figure 4-1~~ shows a typical VAV system. In standard practice, the testing and balancing (TAB) contractor sets the minimum position setting for the outdoor air damper during construction. It is set under the conditions of design

airflow for the system, and remains in the same position throughout the full range of system operation. Does this meet code? The answer is no. As the system airflow drops so will the pressure in the mixed air plenum. A fixed position on the minimum outdoor air damper will produce a varying outdoor airflow. As depicted in Figure 4-2~~Figure 4-1~~, this effect will be approximately linear (in other words outdoor air airflow will drop directly in proportion to the supply airflow).

The following paragraphs present several methods used to dynamically control the minimum outdoor air in VAV systems, which are described in detail below.

Regardless of how the minimum ventilation is controlled, care should be taken to reduce the amount of outdoor air provided when the system is operating during the weekend or after hours with only a fraction of the zones active. §122(g) requires provision of "isolation zones" of 25,000 ft^2 or less. This can be provided by having the VAV boxes return to fully closed when their associated zone is in unoccupied mode. When a space or group of spaces is returned to occupied mode (e.g. through off-hour scheduling or a janitor's override) only the boxes serving those zones need to be active. During this partial occupancy the ventilation air can be reduced to the requirements of those zones that are active. If all zones are of the same occupancy type (e.g. private offices), simply assign a floor area to each isolation zone and prorate the minimum ventilation area by the ratio of the sum of the floor areas presently active divided by the sum of all the floor areas served by the HVAC system.

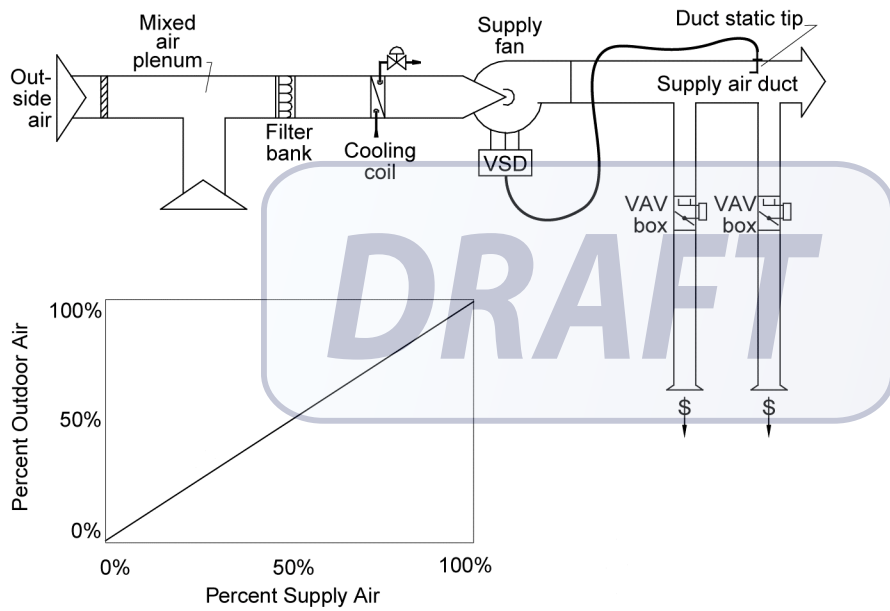

Figure 4-2~~1~~ – VAV Reheat System with a Fixed Minimum outdoor Air Damper Setpoint

Fixed Minimum Damper Setpoint

This method does not comply with Title 24; the airflow at a fixed minimum damper position will vary with the pressure in the mixed air plenum (see Figure 4-2).

Dual Minimum Setpoint Design

This method complies with Title 24 requirements. An inexpensive enhancement to the fixed damper setpoint design is the dual minimum setpoint design, commonly used on some packaged AC units. The minimum damper position is set proportionally based on fan speed or airflow between a setpoint determined when the fan is at full speed (or airflow) and minimum speed (or airflow). This method complies with the letter of Title 24 but is not accurate over the entire range of airflow rates and when there are wind or stack effect pressure fluctuations. But with DDC, this design has very low costs.

Energy Balance Method

~~This method complies with Title 24 requirements; however, compliance may be difficult for reasons discussed below.~~ The energy balance method (Figure 4-3~~Figure 4-2~~) uses temperature sensors in the outside, as well as return and mixed air plenums to determine the percentage of outdoor air in the supply air stream. The outdoor airflow is then calculated using the equations shown in Figure 4-3~~Figure 4-2~~. This method requires an airflow monitoring station on the supply fan.

While technically feasible, ~~This~~ it may be difficult to meet the outside air acceptance requirements with this approach ~~does not generally work for several reasons~~because:

1. It is difficult to accurately measure ~~The accuracy of~~ the mixed air temperature, which ~~sensor~~ is critical to the ~~calculation but is very difficult to perform with any precision in real applications~~success of this strategy. Even with an averaging type bulb, most mixing plenums have some stratification or horizontal separation between the outside and mixed airstreams.[1]

DRAFT

[1] This was the subject of ASHRAE Research Project 1045-RP, "Verifying Mixed Air Damper Temperature and Air Mixing Characteristics." Unless the return is over the outdoor air there are significant problems with stratification or airstream separation in mixing plenums.

2. Even with the best installation, high accuracy sensors, and field calibration of the sensors, the equation for percent outdoor air will become inaccurate as the return air temperature approaches the outdoor air temperature. When they are equal, this equation predicts an infinite percentage outdoor air.
3. The accuracy of the airflow monitoring station ~~at low supply airflows~~ is likely to be low at low supply airflows.
4. The denominator of the calculation amplifies sensor inaccuracy as the return air temperature approaches the outdoor air temperature.

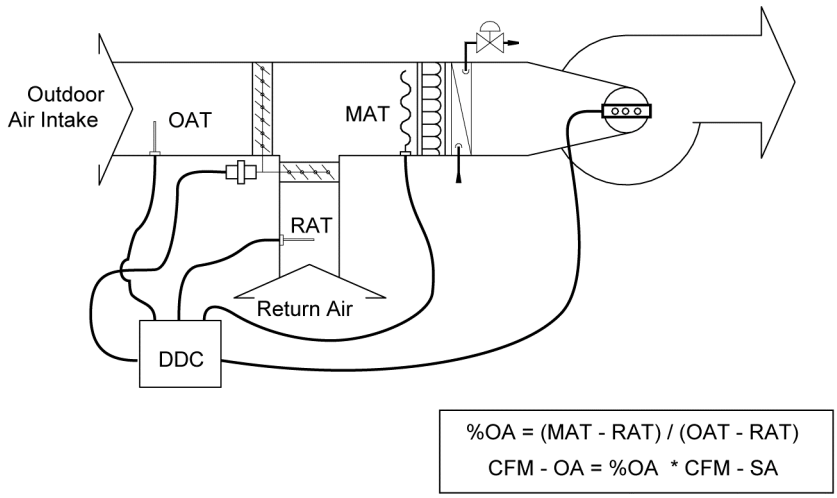

Figure 4-3~~2~~ – Energy Balance Method of Controlling Minimum Outdoor Air

Return Fan Tracking

This method is also technically feasible, but will likely not meet the acceptance requirements ~~complies with Title 24 requirements; however, this approach is not accurate~~ because the cumulative error of the two airflow measurements can be large, particularly at low supply/return airflow rates. It only works theoretically when the minimum outdoor air rate equals the rate of air required to maintain building pressurization (the difference between supply air and return air rates). Return fan tracking (Figure 4-4~~Figure 4-3~~) uses airflow monitoring stations on both the supply and return fans. The theory behind this is that the difference between the supply and return fans has to be made up by outdoor air, and controlling the flow of return air forces more ventilation into the building. Several problems occur with this method: 1) the relative accuracy of airflow monitoring stations is poor, particularly at low airflows; 2) the cost of airflow monitoring stations; 3) it will cause building pressurization problems unless the ventilation air is equal to the desired building exfiltration plus the building exhaust. ASHRAE research has also demonstrated that in some cases this arrangement can cause outdoor air to be drawn into the system through the exhaust dampers due to negative pressures at the return fan discharge.

DRAFT

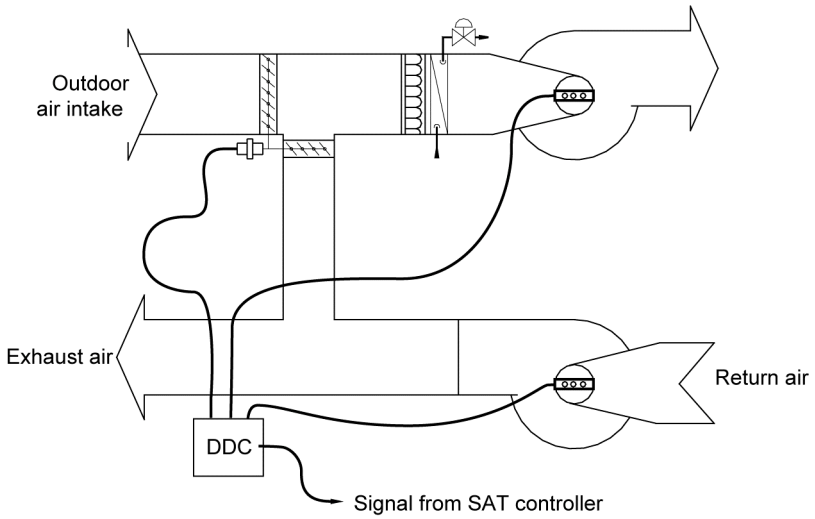

Figure 4-~~4~~3 – Return Fan Tracking

Airflow Measurement of the Entire Outdoor Air Inlet

Again, t~~T~~his method is technically feasible but will likely not meet the acceptance requirements ~~complies with Title 24 requirements; however, it may or may not work~~ depending on the airflow measurement technology. Most airflow sensors will not be accurate to a 5-15 percent~~%~~ turndown (the normal commercial ventilation range. Controlling the outdoor air damper by direct measurement with an airflow monitoring station (Figure 4-5~~Figure 4-4~~) can be an unreliable method. Its success relies on the turndown accuracy of the airflow monitoring station. Depending on the loads in a building, the ventilation airflow can be between 5 and 15 percent~~%~~ of the design airflow. If the outdoor airflow sensor is sized for the design flow for the airside economizer, this method has to have an airflow monitoring station that can turn down to the minimum ventilation flow (between 5 and 15 percent~~%~~). Of the different types available, only a hot-wire anemometer array is likely to have this low-flow accuracy while traditional pitot arrays will not. One advantage of this approach is that it provides outdoor airflow readings under all operating conditions, not just when on minimum outdoor air. For highest accuracy, provide a damper and outdoor air sensor for the minimum ventilation air that is separate from the economizer outdoor air intake.

DRAFT

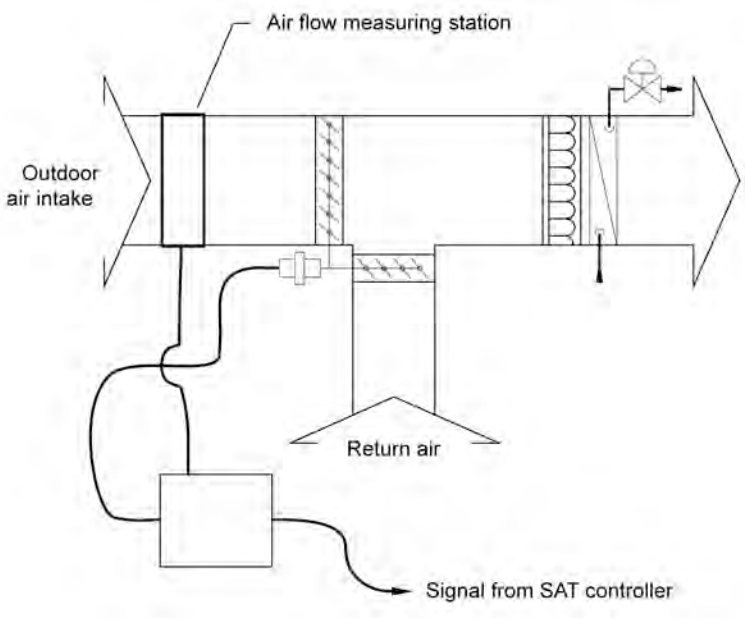

Figure 4-54 – Airflow Measurement of 100% Outdoor Air

Injection Fan Method

This method complies with Title 24 requirements, but it is expensive and may require additional space. Note that an airflow sensor and damper are required since fan airflow rate will vary as mixed air plenum pressure varies. The injection fan method (Figure 4-6~~Figure 4-5~~) uses a separate outdoor air inlet and fan sized for the minimum ventilation airflow. This inlet contains an airflow monitoring station, and a fan with capacity control (e.g., discharge damper; VFD), which is modulated as required to achieve the desired ventilation rate. The discharge damper is recommended since a damper must be provided anyway to shut off the intake when the AHU is off, and also to prevent excess outdoor air intake when the mixed air plenum is very negative under peak conditions. (The fan is operating against a negative differential pressure and thus cannot stop flow just by slowing or stopping the fan.) This method works, but the cost is high and often requires additional space for the injection fan assembly.

DRAFT

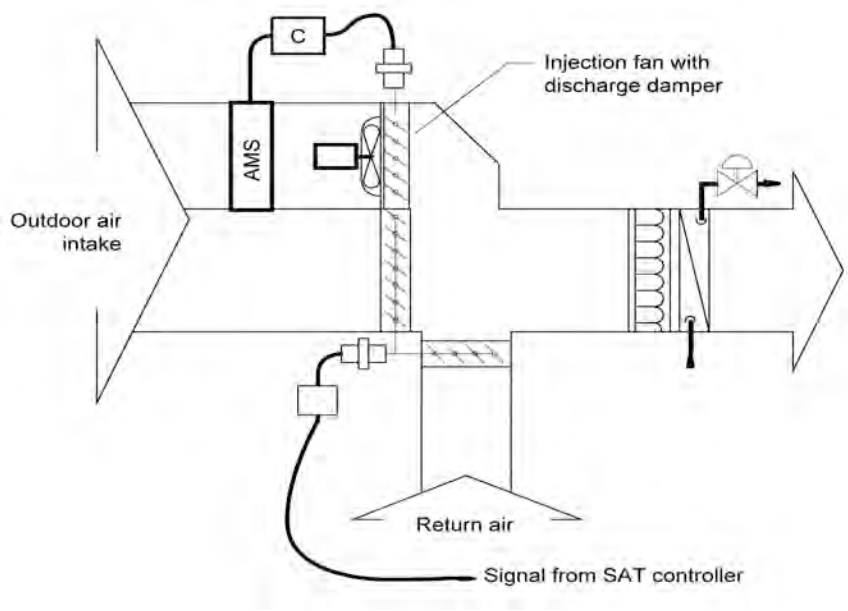

Figure 4-6~~5~~ – Injection Fan with Dedicated Minimum Outdoor Air Damper

Dedicated Minimum Ventilation Damper with Pressure Control

This approach is low cost and takes little space. It can be accurate if the differential setpoint corresponding to the minimum outdoor air rate is properly set in the field. An inexpensive but effective design uses a minimum ventilation damper with differential pressure control (Figure 4-7~~Figure 4-6~~). In this method, the economizer damper is broken into two pieces: a small two position damper controlled for minimum ventilation air and a larger, modulating, maximum outdoor air damper that is used in economizer mode. A differential pressure transducer is placed across the minimum outdoor air damper. During start-up, the air balancer opens the minimum outside air (OA) damper and return air damper, closes the economizer OA damper, runs the supply fan at design airflow, measures the OA airflow (using a hand-held velometer) and adjusts the minimum OA damper position until the OA airflow equals the design minimum OA airflow. The linkages on the minimum OA damper are then adjusted so that the current position is the "full open" actuator position. At this point the design pressure (DP) across the minimum OA damper is measured. This value becomes the DP setpoint. The principle used here is that airflow is constant across a fixed orifice (the open damper) at fixed DP.

As the supply fan modulates when the economizer is off, the return air damper is controlled to maintain the DP setpoint across the minimum ventilation damper.

The main downside to this method is the complexity of controls and the potential problems determining the DP setpoint in the field. It is often difficult to measure the outdoor air rate due to turbulence and space constraints.

DRAFT

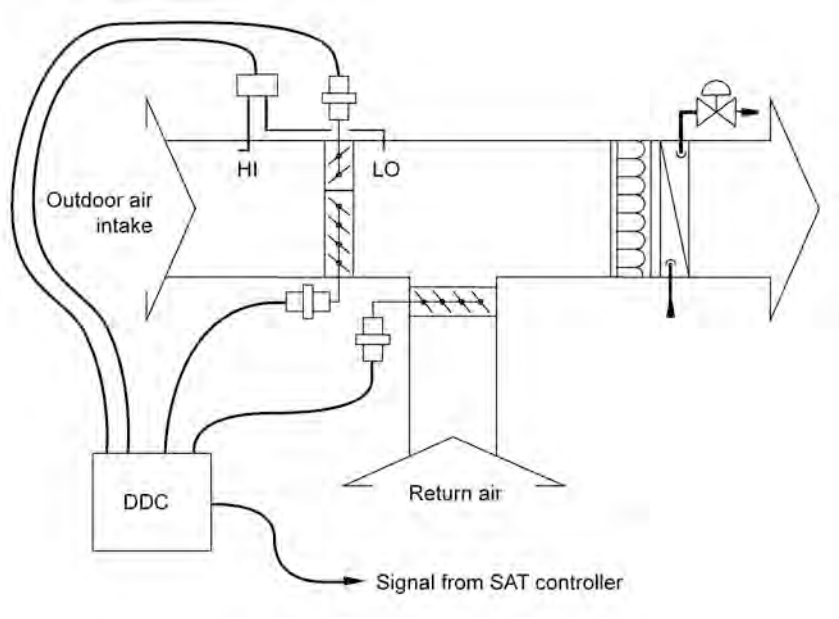

Figure 4-7~~6~~ – Minimum Outdoor Air Damper with Pressure Control

Example 4-104

Question

Minimum VAV cfm:

If the minimum required ventilation rate for a space is 150 cfm, what is the minimum allowed airflow for its VAV box when the design percentage of outdoor air in the supply is 20%?

Answer

The minimum allowed airflow may be as low as 150 cfm provided that enough outdoor air is supplied to all spaces combined to meet the requirements of §121(b)2 for each space individually.

4.3.6 Pre-Occupancy Purge

§121(c)2

Since many indoor air pollutants are out gassed from the building materials and furnishings, the Standards require that buildings having a scheduled operation be purged before occupancy [§121(c)2]. Immediately prior to occupancy, outdoor ventilation must be provided in an amount equal to the lesser of:

1. The minimum required ventilation rate for one hour; or
2. Three complete air changes.

Either criteria can be used to comply with the Standards. Three complete air changes means an amount of ventilation air equal to three times the volume of the occupied space. This air may be introduced at any rate provided for and allowed by the system, so that the actual purge period may be less than an hour.

DRAFT

A pre-occupancy purge is not required for buildings or spaces that are not occupied on a scheduled basis, such as storage rooms. Also, a purge is not required for spaces provided with natural ventilation.

Where pre-occupancy purge is required, it does not have to be coincident with morning warm-up (or cool-down). The simplest means to integrate the two controls is to simply schedule the system to be occupied one hour prior to the actual time of anticipated occupancy. This allows the optimal start, warm-up or pull-down routines to bring the spaces up to (or down to) desired temperatures before opening the outdoor air damper for ventilation. This will reduce the required system heating capacity and ensure that the spaces will be at the desired temperatures and fully purged at the start of occupancy.

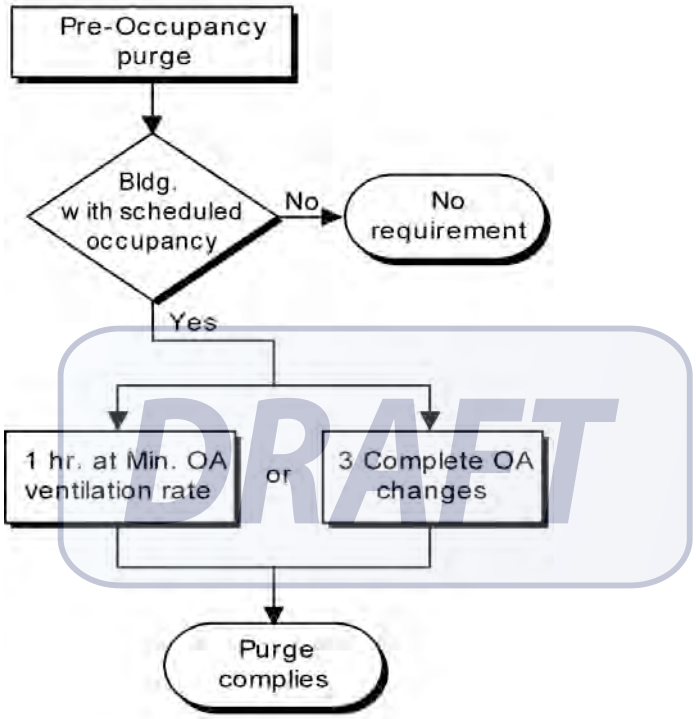

Figure 4-8~~7~~ – Pre-Occupancy Purge Flowchart

Example 4-11~~5~~

Question

Purge Period:

What is the length of time required to purge a space 10 ft. high with an outdoor ventilation rate of 1.5 cfm/ft²?

Answer

For three air changes, each ft^2 of space must be provided with:

OA volume = 3 x 10 = 30 cf/ft^2

At a rate of 1.5 cfm/ft², the time required is:

Time = 30 cf/ft^2 / 1.5 cfm/ft^2 = 20 minutes

Example 4-12~~6~~

Question

Purge with Natural Ventilation:

In a building with natural ventilation, do the windows need to be left open all night to accomplish a building purge?

Answer

No. A building purge is required only for buildings with mechanical ventilation systems.

Example 4-13~~7~~

Question

Purge with Occupancy Timer:

How is a purge accomplished in a building without a regularly scheduled occupancy whose system operation is controlled by an occupancy sensor?

Answer

There is no purge requirement for this building. Note that occupancy sensors and manual timers can only be used to control ventilation systems in buildings that are intermittently occupied without a predictable schedule.

DRAFT

4.3.7 Demand Controlled Ventilation

§121(c)3

Demand controlled ventilation (DCV) systems reduce the amount of ventilation supply air in response to a measured level of carbon dioxide (CO_2) in the breathing zone. The Standards only permit CO_2 sensors for the purpose of meeting this requirement; VOC and so-called "IAQ" sensors are not approved as alternative devices to meet this requirement. The Standards only permit DCV systems to vary the ventilation component that corresponds to occupant bioeffluents (this is basis for the 15 cfm/person portion of the ventilation requirement). While there is a time lag, ~~Since only~~ CO_2 sensors ~~directly~~ track occupancy in a space. One of the key purposes of ventilation is to mitigate body ordors and there is also a delay in the accumulation of these ordors, so insofar as the ventilation is addressing this issue, the time lag is not a problem. ~~they are the only sensors permitted.~~

The Standards requires the use of DVC systems for spaces with all of the following characteristics:

1. Served by single zone units with any controls or multiple zone systems with Direct Digital Controls (DDC) to the zone level.
2. Have a design occupancy of 40 ft^2/person or smaller (for areas without fixed seating where the design density for egress purposes in the CBC is 40 ft^2/person or smaller).

3. Has an ~~outdoor~~ air economizer.

There are ~~three~~ four exceptions to this requirement:

1. Classrooms, call centers, office spaces served by multiple zone systems that are continuously occupied during normal business hours with occupant density greater than 25 people per 1000 ft^2 per §121(b)2B (Tables 4-1 and 4-2 above), healthcare facilities and medical buildings, and public areas of social services buildings. ~~they~~These spaces are permitted to use DCV but not required to.
2. Where the space exhaust is greater than the ~~Standards Table 121(b)~~required ventilation rate ~~value~~ minus 0.2 cfm/ft^2.
3. Spaces that have processes or operations that generate dusts, fumes, mists, vapors, or gases and are not provided with local exhaust ventilation, such as indoor operation of internal combustion engines or areas designated for unvented food service preparation, or beauty salons shall not install demand control ventilation. DCV devices are not allowed in these spaces.
4. Spaces with an area of less than 150 ft^2~~square feet~~, or a design occupancy of less than 10 people per §121(b)2B (Tables 4-1 and 4-2 above).

~~Classrooms were~~The ~~S~~spaces listed in Exception 1 are exempted either due to concerns about equipment maintenance practices (schools and public buildings) ~~in and buildup of contaminants and~~or concerns about high levels of pathogens ~~in high occupancy spaces~~(social service buildings, medical buildings, heathcare facilities and to some extent classrooms). ~~school buildings~~. The second exception relates to the fact that spaces with high exhaust requirements won't ~~have any room to turn down (therefore there will be minimal savings from the DCV controls)~~be able to provide sufficient turndown to justify the cost of the DCV controls. An example of this is a restaurant seating area where the seating area air is used as make-up air for the kitchen hood exhaust. The third exception recognizes that some spaces may need additional ventilation due to contaminants that are not occupant borne. It addresses spaces like theater stages where theatrical fog may be used or movie theater lobbies where unvented popcorn machines may be emitting odors and vapors into the space in either case justifying the need for higher ventilation rates. DCV devices shall not be installed in spaces included in Exception 3. The fourth exception recognizes the fact that DCV devices may not be cost effective in small spaces such as a 15~~'~~ft x 10~~'~~ft conference room or ~~sparsely populated spaces~~spaces with only a few occupants at design conditions.

Although not required, the Standards permit design professionals to apply DCV on any intermittently occupied spaces served by either single-zone or multiple-zone equipment. However, the minimum outdoor air ventilation rates apply to these spaces, and design professionals should ensure that the use of DCV does not degrade indoor air quality.

CO_2 based DCV is based on two principles:

1. Several studies (Berg-Munch et al. 1986, Cain et al. 1983, Fanger 1983 and 1988, Iwashita et al. 1990, Rasmussen et al. 1985) concluded that about 15 cfm of outdoor air ventilation per person will control human body odor such that roughly 80 percent~~%~~ of unadapted persons (visitors) will find the odor to be at an acceptable level. These studies are the basis of the 15 cfm/person rate required by these Standards and most building codes. This ventilation rate can be roughly equated to CO_2 concentration using the following steady-state equation.

   $$V = \frac{\dot{N}}{\left(C_{in,ss} - C_{out}\right)}$$

   where V is the ventilation rate per person, $\dot{N}$ is the CO_2 generation rate per person, $C_{in,ss}$ is the steady-state value of the indoor CO_2 concentration, and C_{out} is the outdoor concentration. At the rate of CO_2 generated by adults at typical activity levels in offices, 15 cfm/person equates to a differential CO_2 concentration (indoor minus outdoor) of approximately 700 ppm.

2. The same level of odor acceptability was found to occur at 700 ppm differential CO_2 concentration even for spaces that were not at equilibrium (Berg-Munch et al. 1986, Fanger 1983, Rasmussen et al. 1985), and the correlation was not strongly dependent on the level of physical activity. This suggests that while CO_2 concentration may not track the number of occupants when spaces are not at steady-state, it does track the concentration of bioeffluents that determine people's perception of air quality. It also suggests that odorous bioeffluents are generated at approximately the same rate as CO_2.

   Hence as activity level and bioeffluent generation rate increases ($\dot{N}$ in the equation above), the rate of outdoor air required to provide acceptable air quality (V) increases proportionally, resulting in the same differential CO_2 concentration.

Note that CO_2 concentration only tracks indoor contaminants that are generated by occupants themselves and, to a lesser extent, their activities. It will not track other pollutants, particularly volatile organic compounds (VOCs) that off-gas from furnishings and building materials. Hence, where permitted or required by the Standards, demand controlled ventilation systems cannot reduce the outdoor air ventilation rate below the floor rate listed in Standards Table 121-A (typically 0.15 cfm/ft^2) during normally occupied times.

DCV systems save energy if the occupancy varies significantly over time. Hence they are most cost effective when applied to densely occupied spaces like auditoriums, conference rooms, lounges or theaters. Because DCV systems must maintain the floor ventilation rate listed in Standards Table 121-A, they will not be applicable to sparsely occupied buildings such as offices where the floor rate always exceeds the minimum rate required by the occupants (see Table 4-2~~Table 4-2~~).

Where DCV is employed (whether mandated or not) the controls must meet all of the following requirements:

1. Sensors must be provided in each room served by the system that has a design occupancy of 40 ft^2/person or less, with no less than one sensor per 10,000 ft² of floor space. When a zone or a space is served by more than one sensor, signal from any sensor indicating that CO_2 is near or at the setpoint within a space, must trigger an increase in ventilation to the space. This requirement ensures that the space is adequately ventilated in case a sensor malfunctions. Design professional should ensure that sensors are placed throughout a large space, so that all areas are monitored by a sensor.
2. The CO_2 sensors must be located in the breathing zone (between ~~1~~3 and 6 ft. above the floor or at the anticipated height of the occupants heads). Sensors in return air ducts are not allowed since they can result in under-ventilation due to CO_2 measurement error caused by short-circuiting of supply air into return grilles and leakage of outdoor air (or return air from other spaces) into return air ducts.
3. The ventilation must be maintained that will result in a concentration of CO_2 at or below 600 ppm above the ambient level. The ambient levels can either be assumed to be 400 ppm or dynamically measured by a sensor that is installed within four feet of the outdoor air intake . At 400 ppm outside CO_2 concentration, the resulting DCV CO_2 setpoint would be 1000 ppm. (Note that a 600 ppm differential is less than the 700 ppm that corresponds to the 15 cfm/person ventilation rate. This provides a margin of safety against sensor error, and because 1000 ppm CO_2 is a commonly recognized guideline value and referenced in earlier versions of ASHRAE Standard 62.)
4. Regardless of the CO_2 sensor's reading, the system is not required to provide more than the minimum ventilation rate required by §121(b). This prevents a faulty sensor reading from causing a system to provide more than the code required ventilation for system without DCV control. This high limit can be implemented in the controls.
5. The system shall always provide a minimum ventilation of the sum of the Standards Table 121-A values for all rooms with DCV and §121(b)2 (Table 4-2~~Table 4-2~~ of this manual) for all other spaces served by the system. This is a low limit setting that must be implemented in the controls.
6. The CO_2 sensors must be factory certified to have an accuracy ~~of no less than~~within plus or minus 75 ppm at 600 and 1000 ppm concentration when measured at sea level and 25°C (77°F), factory calibrated or calibrated at start-up, and certified by the manufacturer to require calibration no more frequently than once every 5 years~~over a five-year period without recalibration in the field~~. A number of manufacturers have "self calibrating" sensors now that either adjust to ambient levels during unoccupied times or adjust to the decrease in sensor bulb output through use of dual sources or dual sensors.~~-~~ For all systems, ~~The~~ the manufacturers of sensors must provide a document to installers that their sensors meet these requirements. The installer must make this certification information available to the builder,

DRAFT

building inspectors and, if specific sensors are specified on the plans, to plan checkers.

7. When a sensor failure is detected, the system must provide a signal to reset the system to provide the minimum quantity of outside air levels required by ~~section~~ §121(b)~~(2)~~ to the zone(s) serviced by the sensor at all times that the zone is occupied. This requirement ensures that the space is adequately ventilated in case a sensor malfunctions. A sensor that provides a high CO_2 signal on sensor failure will comply with this requirement.
8. For systems that are equipped with DDC to the zone level, the CO_2 sensor(s) reading for each zone must be displayed continuously, and recorded. The energy management control system (EMCS) may be used to display and record the sensors' readings. The display(s) must be readily available to maintenance staff so they can ~~be alerted in case a sensor malfunctions~~monitor the systems performance.

Section 0~~12~~ describes mandated acceptance test requirements for DCV systems.

Example 4-14~~8~~

Question

Does a single zone air-handling unit serving a 2,000 ft² auditorium with fixed seating for 240 people require demand controlled ventilation?

Answer

Yes if it has an air-side economizer. There are three tests for the requirement.

The first test is whether the design occupancy is 40 ft^2/person or less. This space has 2,000 ft²/240 people or 8.3 ft² /person.

The second test is that the unit is single zone

The third is that it has an air-side economizer.

A single CO_2 sensor could be used for this space provided it is certified by the manufacturer to cover 2,000 ft² of space. The sensor must be placed directly in the space.

Example 4-15~~9~~

Question

If two separate units are used to condition the auditorium in the previous example, is demand controlled ventilation required?

Answer

Yes, if they each meet the three tests.

Example 4-16

Question

DRAFT

If a central AHU supplies five zones of office space (with a design occupant density of 100 ft^2~~sf~~/person and two zones with conference rooms (with a design occupant density of 35 ft^2~~sf~~/person) is it required to have demand controlled ventilation and if so, on which zones?

Answer

If the AHU has DDC controls to the zone and an airside economizer it is required to have DCV controls in both of the conference room zones. The minimum OSA will be set for 0.15 cfm/ft^2 times the total area of all seven zones (the office and conference room zones) and the maximum required OSA does not need to exceed the sum of 0.15 cfm/ft^2 for the 5 office zones plus 15 cfm per person for the two conference rooms.

4.3.8 Fan Cycling

While §121(c)1 requires that ventilation be continuous during normally occupied hours, Exception No. 2 allows the ventilation to be disrupted for not more than five minutes out of every hour. In this case the ventilation rate during the time the system is ventilating must be increased so the average rate over the hour is equal to the required rate.

This restriction limits the duty cycling of fans by energy management systems to not more than five minutes out of every sixty minutes. In addition, when a space-conditioning system that also provides ventilation is controlled by a thermostat incorporating a fan “On/Auto” switch, the switch should be set to the “On” position. Otherwise, during mild conditions, the fan may be off the majority of the time.

4.3.9 Variable Air Volume (VAV) Changeover Systems

DRAFT

Some VAV systems provide conditioned supply air, either heated or cooled, through a single set of ducting. These systems are called VAV changeover systems or, perhaps more commonly, variable volume and temperature (VVT™) systems, named after a control system distributed by Carrier Corp. In the event that heating is needed in some spaces at the same time that cooling is needed in others, the system must alternate between supplying heated and cooled air. When the supply air is heated, for example, the spaces requiring cooling are isolated (cut off) by the VAV dampers and must wait until the system switches back to cooling mode. In the meantime, they are generally not supplied with ventilation air.

Systems of this type may not meet the ventilation requirements if improperly applied. Where changeover systems span multiple orientations the designer must make control provisions to ensure that no zone is shut off for more than five minutes per hour and that ventilation rates are increased during the remaining time to compensate. Alternatively, minimum damper position or airflow setpoints can be set for each zone to maintain supply air rates, but this can result in temperature control problems since warm air will be supplied to spaces that require cooling, and vice versa. Changeover systems that are applied to a common building orientation (e.g., all east or all interior) are

generally the most successful since zones will usually have similar loads, allowing minimum airflow rates to be maintained without causing temperature control problems.

4.3.10 Adjustment of Ventilation Rate

~~Section~~ §121(b) specifies the minimum required outdoor ventilation rate, but does not restrict the maximum. However, if the designer elects to have the space-conditioning system operate at a ventilation rate higher than the rate required by the Standards, then the Standards require that the space-conditioning system must be adjustable so that in the future the ventilation rate can be reduced to the amount required by the Standards or the rate required for make-up of exhaust systems that are required for a process, for control of odors, or for the removal of contaminants within the space [§121(e)].

In other words, a system can be designed to supply higher than minimum outside air volumes provided dampers or fan speed can be adjusted to allow no more than the minimum volume if, at a later time, someone decides it is desirable. The Standards preclude a system designed for 100 percent~~%~~ outdoor air, with no provision for any return air, unless the supply air quantity can be adjusted to be equal to the designed minimum outdoor air volume. The intent is to prevent systems from being designed that will permanently over-ventilate spaces.

4.3.11 Miscellaneous Dampers

§122(f)

Dampers should not be installed on combustion air intakes, or where prohibited by other provisions of law [§122(f) Exception Nos. 3 & 4]. If the designer elects to install dampers on shaft vents to help control stack-induced infiltration, the damper should be motorized and controlled to open in accordance with applicable fire codes.

DRAFT

4.3.12 Acceptance Requirements

§125~~121(f), 122(h) and 121(c)5~~

The Standards have acceptance test requirements for:

1. Ventilation quantities at design airflow for constant volume systems [§~~121(f)]~~125(a)1 and NA7.5.1.2].
2. Ventilation quantities at design and minimum airflow ~~[~~for VAV systems~~,~~ §~~121(f)]~~[125(a)1 and NA7.5.1.1].
3. Ventilation system time controls [§~~122(h)~~125(a)2 and NA7.5.2].
4. Demand controlled ventilation systems [§~~121(c)~~125(a)5 and NA7.5.5].

These test requirements are described in Chapter 10~~8~~ and the Reference Nonresidential Appendix NA7.5. ~~8 and in the Non-Residential ACM Manual Appendix NJ.~~ They are described in brief in the following paragraphs.

Example 4-16~~10~~

Question

Maintenance of Ventilation System:

In addition to these commissioning requirements for the ventilation system, are there any periodic requirements for inspection?

Answer

The Standards do not contain any such requirements since they apply to the design and commissioning of buildings, not to its later operation. However, Section 5142 of the General Industry Safety Orders, Title 8, California Safety Code (1987): Mechanically Driven Heating, Ventilating and Air Conditioning (HVAC) Systems to Provide Minimum Building Ventilation, states the following:

(b) Operation and Maintenance

(1) The HVAC system shall be inspected at least annually, and problems found during these inspections shall be corrected within a reasonable time.

(2) Inspections and maintenance of the HVAC systems shall be documented in writing. The employer shall record the name of the individual(s) inspecting and/or maintaining the system, the date of the inspection and/or maintenance, and the specific findings and actions taken. The employer shall ensure that such records are retained for at least five years.

(3) The employer shall make all records required by this section available for examination and copying, within 48 hours of a request, to any authorized representative of the Division (as defined in Section 3207 of Title 8), to any employee of the employer affected by this section, and to any designated representative of said employee of the employer affected by this Section.

DRAFT

Ventilation Airflow

~~§121(f)~~NA7.5.1

Ventilation airflow has to be certified to be measured ~~as~~ within 10 percent~~%~~ of the design airflow quantities at two points of operation: full design supply airflow (all systems) and (for VAV systems) at airflow with all VAV boxes at or near minimum position.

If airflow monitoring stations are provided, they can be used for these measurements.

Ventilation System Time Controls and Preoccupancy Purge

~~122(h)~~NA7.5.2

Programming for preoccupancy purge and HVAC schedules are checked and certified as part of the acceptance requirements. The sequences are also

required to be identified by specification section paragraph number (or drawing sheet number) in the compliance forms.

Demand Controlled Ventilation System

~~121(c)5~~NA7.5.3

Demand controlled ventilation systems are checked for compliance with sensor location, calibration (either factory certificate or field validation) and tested for system response with both a high signal (produced by a certified calibration test gas applied to the sensor~~from test gas or breathing on the sensor~~) and low signal (by increasing the setpoint above the ambient level). A certificate of acceptance must be provided to the building department that the demand control ventilation system meets the Acceptance Requirements for Code Compliance. The certificate of acceptance must include certification from the manufacturers of sensor devices that they will meet the requirements of §121(c)4F and that they will provide a signal that indicates the CO_2 level in the range required by §121(c)4, certification from the controls manufacturer that they respond to the type of signal that the installed sensors supply and that they can be calibrated to the CO_2 levels specified in §121(c)4, and that the CO_2 sensors have an accuracy of ~~no lies than~~be within plus or minus 75 ppm at 600 and 1000 ppm concentrations, and require calibration no more frequently than once every five years.

DRAFT

4.4 Pipe and Duct Distribution Systems

4.4.1 Mandatory Measures

Requirements for Pipe Insulation

§123
Table 123-A

Most piping conveying either mechanically heated or chilled fluids for space conditioning or service water heating must be insulated in accordance with §123. The required thickness of piping insulation depends on the temperature of the fluid passing through the pipe, the pipe diameter, the function of the pipe within the system, and the insulation's thermal conductivity.

Standards Table 123-A specifies the requirements in terms of inches of insulation with a conductivity within a specific range. These conductivities are typical for fiberglass or foam pipe insulation. In this table, runouts are defined as being less than two inches in diameter, less than 12 feet long, and connected to fixtures or individual terminal units. Piping within fan coil units and within other heating or cooling equipment may be considered runouts for the purposes of determining the required pipe insulation.

Piping that does not require insulation includes the following:

> Factory installed piping within space-conditioning equipment certified under §111 or §112. Nationally recognized certification programs that are accepted by the Commission for certifying efficiencies of appliances and equipment are considered to meet the requirements for this exception.
>
> Piping that conveys fluid with a design operating temperature range between 60°F and 105°F, such as cooling tower piping or piping in water loop heat pump systems.
>
> Piping that serves process loads, gas piping, cold domestic water piping, condensate drains, roof drains, vents or waste piping.

Note: Designers may specify exempt piping conveying cold fluids to be insulated in order to control condensation on the surface of the pipe. Examples may include cold domestic water piping, condensate drains and roof drains. In these cases, the insulation R-value is specified by the designer and is not subject to these regulations.

> Where the heat gain or heat loss, to or from piping without insulation, will not increase building source energy use. For example, piping connecting fin-tube radiators within the same space would be exempt, as would liquid piping in a split system air conditioning unit.

This exception would not exempt piping in solar systems. Solar systems typically have backup devices that will operate more frequently if piping losses are not minimized.

DRAFT

> Piping that penetrates framing members shall not be required to have pipe insulation for the distance of the framing penetration. Metal piping that penetrates metal framing shall use grommets, plugs, wrapping or other insulating material to assure that no contact is made with the metal framing.

Conductivities and thicknesses listed in Standards Table 123-A are typical for fiberglass and foam. When insulating materials are used that have conductivities different from those listed here for the applicable fluid range, such as calcium silicate, Standards Equation 123-A may be used to calculate the required insulation thickness.

When a pipe carries cold fluids, condensation of water vapor within the insulation material may impair the effectiveness of the insulation, particularly for applications in very humid environments or for fluid temperatures below 40°F. Examples include refrigerant suction piping and low-temperature ~~t~~Thermal ~~e~~Energy ~~s~~Storage (TES) systems. In these cases, manufacturers should be consulted and consideration given to low permeability vapor barriers, or closed-cell foams.

The Standards also require that exposed pipe insulation be protected from damage by moisture, UV and physical abrasion including but not limited to the following:

> Insulation exposed to weather shall be suitable for outdoor service; e.g., protected by aluminum, sheet metal, painted canvas, or plastic cover. Cellular foam insulation shall be protected as above or painted with a coating that is water retardant and provides shielding from solar radiation that can cause degradation of the material.
>
> Insulation covering chilled water piping and refrigerant suction piping located outside the conditioned space shall include a vapor retardant located outside the insulation (unless the insulation is inherently vapor retardant), all penetrations and joints of which shall be sealed.

If the conductivity of the proposed insulation does not fall into the conductivity range listed in Standards Table 123-A, the minimum thickness must be adjusted using the following equation:

Equation 4-1–Insulation Thickness

$$T = PR[(1 + t/PR)^{K/k} - 1]$$

Where:

T *Minimum insulation thickness for material with conductivity K, inches.*

PR *Pipe actual outside radius, inches.*

t *Insulation thickness, inches (from Standards Table 123-A for conductivity k).*

K *Conductivity of alternate material at the mean rating temperature indicated in Standards Table 123-A for the applicable fluid temperature range, in Btu-in./(h-ft² -°F).*

DRAFT

k The lower value of the conductivity range listed in Standards Table 123-A for the applicable fluid temperature, Btu-in/(h-ft² -°F).

Table 4-3 – Standards Table 123-A Pipe Insulation Thickness

FLUID TEMPERATURE RANGE, (°F)	CONDUCTIVITYRANGE (in Btu-inch per hour per square foot per °F)	INSULATION MEAN RATING TEMPERATURE (°F)	NOMINAL PIPE DIAMETER (in inches)					
			Runouts up to 2	1 and less	1.25-2	2.50-4	5-6	8 and larger
			INSULATION THICKNESS REQUIRED (in inches)					
Space heating systems (steam, steam condensate and hot water)								
Above 350	0.32-0.34	250	1.5	2.5	2.5	3.0	3.5	3.5
251-350	0.29-0.31	200	1.5	2.0	2.5	2.5	3.5	3.5
201-250	0.27-0.30	150	1.0	1.5	1.5	2.0	2.0	3.5
141-200	0.25-0.29	125	0.5	1.5	1.5	1.5	1.5	1.5
105-140	0.24-0.28	100	0.5	1.0	1.0	1.0	1.5	1.5
Service water-heating systems (recirculating sections, all piping in electric trace tape systems, and the first 8 feet of piping from the storage tank for nonrecirculating systems)								
Above 105	0.24-0.28	100	0.5	1.0	1.0	1.5	1.5	1.5
Space cooling systems (chilled water, refrigerant and brine)								
40-60	0.23-0.27	75	0.5	0.5	0.5	1.0	1.0	1.0
Below 40	0.23-0.27	75	1.0	1.0	1.5	1.5	1.5	1.5

Example 4-1717

Question

What is the required thickness for calcium silicate insulation on a 4 inch diameter pipe carrying a 300°F fluid?

Answer

From Table 123-A in the Standards, the required insulation thickness is 2.5 inches for a 4 inch pipe in the range of 251-350°F.

The bottom of the range for mean conductivity at this temperature is listed as 0.29 (Btu-in.)/(h-ft²-°F). From manufacturer's data, it is determined that the conductivity of calcium silicate at 300°F is 0.45 Btu-in./(h-ft²-°F). The required thickness is therefore:

$$T = PR[(1 + t/PR)^{K/k} – 1]$$

$$T = 4"[(1 + 2.5/4)^{(0.045/0.29)} – 1]$$

$$T = 2.83"$$

When insulation is not available in the exact thickness calculated, the installed thickness should be the next larger available size.

DRAFT

Requirements for Air Distribution System Ducts and Plenums

§124

Poorly sealed or poorly insulated duct work can cause substantial losses of air volume and energy. All air distribution system ducts and plenums, including building cavities, mechanical closets, air handler boxes and support platforms

used as ducts or plenums, are required to be installed, sealed, and insulated in accordance with the ~~2001~~ California Mechanical Code (CMC) Sections 601, 602, 603, 604, 605 and Standard 6-5.

Installation and Insulation

§124(a)

Portions of supply-air and return-air ducts ductwork conveying heated or cooled air located in one or more of the following spaces shall be insulated to a minimum installed level of R-8:

1. Outdoors, or
2. In a space between the roof and an insulated ceiling, or
3. In a space directly under a roof with fixed vents or openings to the outside or unconditioned spaces, or
4. In an unconditioned crawlspace; or
5. In other unconditioned spaces.

Portions of supply-air ducts ductwork that are not in one of these spaces shall be insulated to a minimum installed level of R-4.2 (or any higher level required by CMC Section 605) or be enclosed in directly conditioned space. CMC insulation requirements are reproduced in Table 4-4~~Table 14-4~~. The following are also required:

1. Mechanically fasten connections between metal ducts and the inner core of flexible ducts.
2. Seal openings with mastic, tape, aerosol sealant or other duct closure system that meets the applicable requirements of UL 181, UL 181A, UL 181B or UL 723 (aerosol sealant).
3. When mastic or tape is used to seal openings greater than 1/4 in., a combination of mastic and mesh or mastic and tape must be used.

Factory-Fabricated Duct Systems §124(b)1

Factory-fabricated duct systems must meet the following requirements:

1. All factory-fabricated duct systems shall~~must~~ comply with UL 181 for ducts and closure systems, including collars, connections and splices, and be labeled as complying with UL181. UL181 testing may be performed by UL laboratories or a laboratory approved by the Executive Director.~~Duct and closure systems comply with UL 181, including collars, connections and splices, and must be UL labeled.~~
2. Pressure-sensitive tapes, heat-activated tapes, and mastics used in the manufacture of rigid fiberglass ducts comply with UL 181 and UL181A.
3. Pressure-sensitive tapes and mastics used with flexible ducts comply with UL181 ~~or~~ and UL181B.

4. Joints and seams of duct systems and their components shall not be sealed with cloth back rubber adhesive duct tapes unless such tape is used in combination with mastic and drawbands.

Field-Fabricated Duct Systems §124(b)2

Field-fabricated duct systems must meet the following requirements:

1. Factory-made rigid fiberglass and flexible ducts for field-fabricated duct systems comply with UL 181. Pressure-sensitive tapes, mastics, aerosol sealants or other closure systems shall~~must~~ meet applicable requirements of UL 181, UL 181A ~~or~~ and UL 181B.
2. Mastic Sealants and Mesh:
   I. Sealants comply with the applicable requirements of UL 181, UL 181A, ~~or~~ and UL 181B, and shall~~must~~ be non-toxic and water resistant.
   II. Sealants for interior applications shall pass ASTM Tests C 731(extrudability after aging) and D 2202 (slump test on vertical surfaces), incorporated herein by reference.
   III. Sealants for exterior applications shall pass ASTM Tests C 731, C 732 (artificial weathering test) and D 2202, incorporated herein by reference.
   IV. Sealants and meshes shall be rated for exterior use.
3. Pressure-sensitive tapes shall comply with the applicable requirements of UL 181, UL 181A ~~or~~ and UL 181B.
4. Drawbands used with flexible duct shall:
   I. Be either stainless-steel worm-drive hose clamps or UV~~uv~~-resistant nylon duct ties.
   II. Have a minimum tensile strength rating of 150 pounds.
   III. Be tightened as recommended by the manufacturer with an adjustable tensioning tool.
5. Aerosol-Sealant Closures.
   I. Aerosol sealants meet applicable requirements of UL 723 and must be applied according to manufacturer specifications.
   II. Tapes or mastics used in combination with aerosol sealing shall~~must~~ meet the requirements of this section.
6. Joints and seams of duct systems and their components shall not be sealed with cloth back rubber adhesive duct tapes unless such tape is used in combination with mastic and drawbands.

DRAFT

Duct Insulation R-Values §124(c), 124(d) & 124(e)

Since 2001, the Standards have included the following requirements for the labeling, measurement and rating of duct insulation:

1. Insulation R-values shall be based on the insulation only and not include air-films or the R-values of other components of the duct system.
2. Insulation R-values shall be tested C-values at 75°F mean temperature at the installed thickness, in accordance with ASTM C 518 or ASTM C 177.
3. The installed thickness of duct insulation for purpose of compliance shall be the nominal thickness for duct board, duct liner, factory made flexible air ducts and factory-made rigid ducts. For factory-made flexible air ducts, the installed thickness shall be determined by dividing the difference between the actual outside diameter and nominal inside diameter by two.
4. The installed thickness of duct insulation for purpose of compliance shall be 75 percent~~%~~ of its nominal thickness for duct wrap.
5. Insulated flexible air ducts must bear labels no further than 3 ft. apart that state the installed R-value (as determined per the requirements of the Standards).

A typical duct wrap, nominal 1-1/2 inch and 0.75 pcf will have an installed rating of R-4.2 with 25 percent~~%~~ compression.

DRAFT

Protection of Duct Insulation §124(f)

The Standards require that exposed duct insulation be protected from damage by moisture, UV and physical abrasion including but not limited to the following:

1. Insulation exposed to weather shall be suitable for outdoor service; e.g., protected by aluminum, sheet metal, painted canvas, or plastic cover.
2. Cellular foam insulation shall be protected as above or painted with a coating that is water retardant and provides shielding from solar radiation that can cause degradation of the material.

Example 4-18

Question

What are the sealing requirements in a VAV system having a static pressure setpoint of 1.25” w.g. and a plenum return?

Answer

All duct work located within the return plenum must be sealed in accordance with the California Mechanical Code (CMC) Sections 601, 602, 603, 604 and 605 (refer to §124). Pressure-sensitive tape, heat-seal tape and mastic may be used, if it meets the applicable requirement of UL 181, 181A, 181B, to seal joints and seams which are mechanically fastened per the CMC.

Table 4-4 – Duct Insulation Requirements

DUCT LOCATION [1]	INSULATION R-VALUE MECHANICALLY COOLED	HEATING ZONE	INSULATION R-VALUE HEATING ONLY
On roof on exterior building	6.3	< 4,500 DD	2.1
		< 8,000 DD	4.2
Attics, garages, and crawl spaces	2.1	< 4,500 DD	2.1
		< 8,000 DD	4.2
In walls [2] and within floor to ceiling spaces [2]	2.1	< 4,500 DD	2.1
		< 8,000 DD	4.2
Within the conditioned space or in basements; return ducts in air plenums	None Required		None Required
Cement slab or within ground	None Required		None Required

[1] Vapor barriers shall be installed on supply ducts in spaces vented to the outside in geographic areas where the average July, August and September mean dew point temperature exceeds 60 degrees Fahrenheit.

[2] Insulation may be omitted on that portion of a duct which is located within a wall or a floor to ceiling space where:

a. Both sides of the space are exposed to conditioned air.
b. The space is not ventilated.
c. The space is not used as a return plenum.
d. The space is not exposed to unconditioned air.

Ceilings which form plenums need not be insulated.

NOTE: Where ducts are used for both heating and cooling, the minimum insulation shall be as required for the most restrictive condition.

Source: Uniform Mechanical Code §605

4.4.2 Prescriptive Requirements

DRAFT

Duct Leakage *§144(k)*

Ducts on small single zone systems with portions of the ductwork either out of doors or in uninsulated or vented ceiling spaces are required to be sealed and leak tested as specified in Reference Nonresidential Appendix NA1 ~~[§144(k) and §125]~~. This will generally only apply to small commercial projects that are one or two stories with packaged single zone units or split systems. Duct leakage testing only applies when all of the following are true:

1. The system is constant volume.
2. It serves less than 5000 ft^2 of conditioned space.
3. 25 percent~~%~~ or more of the duct surface area is located in the outdoors, unconditioned space, a ventilated attic, in a crawl space or where the U-factor of the roof is greater than the U-factor of the ceiling [except where the roof meets with the requirements of §143(a)1C].

Where duct sealing and leakage testing is required, the ducts must be tested by a HERS certified agency to demonstrate a leakage rate of ~~≤~~no more than 6 percent~~%~~ of fan flow.

§149(b)1D requires that duct sealing apply to new ducts on existing systems AND existing ducts on existing systems that are being either repaired or replaced. Where an entirely new duct system is being installed, and meets the

criteria previously described it must meet or exceed the leakage rate of ~~<~~ no more than 6 percent~~%~~ of fan flow.

If the new ducts are an extension of an existing duct system the combined system (new and existing ducts) must meet:

1. A leakage rate of < 15 percent~~%~~ of fan flow, or
2. A reduction in leakage rate of > 60 percent~~%~~ (as compared to the existing ductwork) with all "accessible" leaks demonstrated through visual inspection to have been sealed, or
3. All accessible leaks shall be sealed and verified through a visual inspection by a certified HERS rater.

There is an exception for ducts that are connected to existing ducts with asbestos insulation or sealant.

These requirements also apply to cases where existing HVAC equipment is either repaired or replaced. With exceptions for ducts that are insulated or sealed with asbestos and an existing duct system that has previously been leakage tested by a certified California HERS rater (see http://www.energy.ca.gov/HERS/).

One can avoid sealing the ducts by insulating the roof and sealing the attic vents as part of a larger remodel, thereby creating a conditioned space within which the ducts are located, and no longer meets the criteria of §144~~-~~(k). Another alternative to duct sealing is to install a high efficiency air conditioner that will save as much energy as the duct system is losing through leaks. This trade-off can be calculated using the performance software or by using pre-calculated equipment efficiencies deemed comparable to duct sealing. In climate zones 1-15, systems with air conditioner efficiencies at least as high as those in Table 4-5 are deemed equivalent to duct sealing. Climate zone 16 has additional equivalency requirements as noted in footnote number 1 to Table 4-5.

~~Section 4.4.3 describes mandated acceptance test requirements for ductwork.~~

DRAFT

Table 4-~~5~~5 – Single Zone Air-Conditioner Efficiency Deemed Comparable to Duct Sealing

	Air conditioner		Heat Pump	
	< 65,000 Btu/h	≥ 65,000 Btu/h	< 65,000 Btu/h	≥ 65,000 Btu/h
CTZ	SEER/EER	EER	SEER/EER	EER
1	13.5/11.2	11.3	13.0/10.6	11.0
2	13.8/11.4	11.5	13.3/11.0	11.5
3	13.2/11.0	11.1	13.0/10.7	11.0
4	13.4/11.1	11.3	13.1/10.9	11.2
5	13.2/11.0	11.0	13.0/10.8	11.0
6	13.1/10.9	11.0	13.1/10.9	11.0
7	13.3/11.0	11.1	13.3/11.0	11.1
8	13.5/11.2	11.3	13.4/11.1	11.3
9	13.7/11.4	11.4	13.6/11.3	11.4
10	13.9/11.5	11.7	13.9/11.5	11.7
11	14.2/11.8	11.9	13.3/11.0	11.7
12	14.0/11.6	11.9	13.3/11.0	11.9
13	14.3/11.9	12.0	13.7/11.4	11.9
14	14.2/11.8	12.0	13.6/11.3	11.9
15	14.5/12.0	12.1	14.5/12.0	12.1
16[1]	14.0/11.6[1]	12.1[1]	13.0/10.8	11.7

1. In climate zone 16, the equivalent efficiency system must have high efficiency heating system in addition to the minimum air conditioner efficiency In Table 4-5. A high heating efficiency system has a minimum thermal efficiency of 96% or an AFUE of 94% for furnaces and a minimum HSPF of 8.4 or a COP of 3.8 for heat pumps.

Example 4-19

Question

A new 20 ton single zone system with new ductwork serving an auditorium is being installed. Approximately ½ of its ductwork on the roof. Does it need to be leak tested?

Answer

Probably not. Although this system meets the criteria of being single zone and having more than ¼ of the duct surface area on the roof, the unit probably serves more than 5,000 ft^2 of space. Most 15 and 20 ton units will serve spaces that are significantly larger than 5,000 ft^2. If the space is 5,000 ft^2 or less the ducts do need to be leak tested per §144(k).

Example 4-20

Question

A new 5 ton single zone system with new ductwork serving a 2,000 ft^2 office is being installed. The unit is a down discharge configuration and the roof has insulation over the deck. Does the ductwork need to be leak tested?

Answer

Probably not. Although this system meets the criteria of being single zone and serving less than 5,000 ft^2 of space, it does not have ¼ of its duct area in one of the spaces listed in §144(k). With the insulation on the roof and not on the ceiling, the plenum area likely meets the criteria of indirectly conditioned so no leakage testing is required.

DRAFT

Example 4-21

Question

A 5 ton single zone packaged rooftop unit with existing ductwork serving a 2,000 ft^2 office is being replaced. The unit is a down discharge configuration but the ductwork runs between an uninsulated roof and an insulated dropped ceiling. Does the ductwork need to be leak tested?

Answer

Most likely it will. This system meets the criteria of being single zone and serving less than 5,000 ft^2 of space. It also likely has more than ¼ of its duct area in the space between the uninsulated roof and the insulated ceiling. This space does not pass the U-factor criteria (i.e., the U-factor of the roof is more than the U-factor of the ceiling. Per §149(b)1D the ductwork will need to be sealed and leak tested to provide leakage ≤< 15% of fan flow.

4.5 HVAC System Control Requirements

4.5.1 Mandatory Measures

This section covers controls that are mandatory for all system types, including:

1. Heat pump controls for the auxiliary heaters,
2. Zone thermostatic control including special requirements for hotel/motel guest rooms and perimeter systems,
3. Shut-off and setback/setup controls,
4. Infiltration control,
5. Off-hours space isolation, and
6. Control equipment certification.

DRAFT

Heat Pump Controls

§112(b)

Heat pumps with electric resistance supplemental heaters must have controls that limit the operation of the supplemental heater to defrost and as a second stage of heating when the heat pump alone cannot satisfy the load. The most effective solution is to specify an electronic thermostat designed specifically for use with heat pumps. This “anticipatory” thermostat can detect if the heat pump is raising the space temperature during warm-up fast enough to warrant locking out the auxiliary electric resistance heater.

This requirement can also be met using conventional electronic controls with a two-stage thermostat and an outdoor lockout thermostat wired in series with the auxiliary heater. The outdoor thermostat must be set to a temperature where the heat pump capacity is sufficient to warm up the space in a reasonable time (e.g., above 40°F). This conventional control system is depicted schematically in Figure 4-9~~Figure 4-9~~ below.

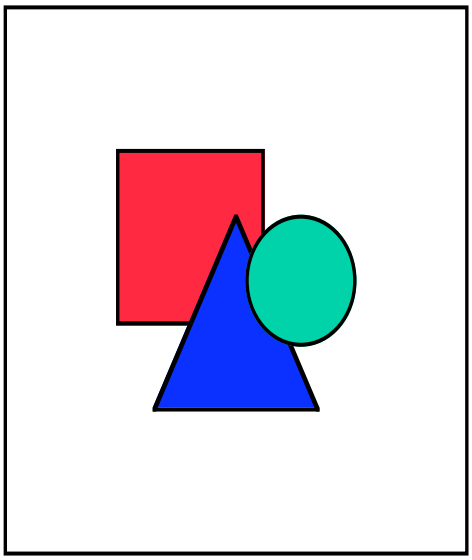

Figure 4-9 – Heat Pump Auxiliary Heat Control, Two-Stage and Outdoor Air Thermostats

Zone Thermostatic Controls

[§122(a), (b) and (c)]

Thermostatic controls must be provided for each space-conditioning zone or dwelling unit to control the supply of heating and cooling energy within that zone [§122(a)]. The controls must have the following characteristics:

1. When used to control **heating**, the thermostatic control must be adjustable down to 55°F or lower.
2. When used to control **cooling**, the thermostatic control must be adjustable up to 85°F or higher.
3. When used to control both **heating and cooling**, the thermostatic control must be adjustable from 55°F to 85°F and also provide a temperature range or **dead band** of at least 5°F. When the space temperature is within the deadband, heating and cooling energy must be shut off or reduced to a minimum. A dead band is not required if the thermostat requires a manual changeover between the heating and cooling modes §122(b) Exception No. 1.

The setpoint may be adjustable either locally or remotely, by continuous adjustment or by selection of sensors.

DRAFT

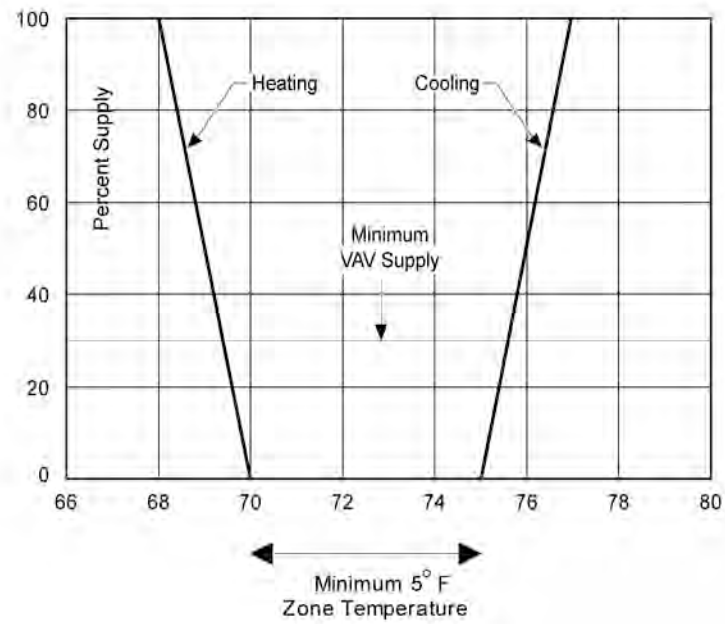

Figure 4-10~~10~~ – Proportional Control Zone Thermostat

Example 4-22

Question

Can an energy management system be used to control the space temperatures?

Answer

Yes, provided the space temperature setpoints can be adjusted, either locally or remotely. This section sets requirements for "thermostatic controls" which need not be a single device like a thermostat; the control system can be a broader system like a direct digital control (DDC) system. Note that some DDC systems employ a single cooling setpoint and a fixed or adjustable deadband. These systems comply if the deadband is adjustable or fixed at 5°F or greater.

Thermostats with adjustable setpoints and deadband capability are not required for zones that must have constant temperatures to prevent the degradation of materials, a process, or plants or animals §122(b) Exception No. 2. Included in this category are ~~computer rooms, clean rooms~~manufacturing facilities, hospital patient rooms, museums, etc. This does not include computer rooms as the ASHRAE guidelines for data centers and telecom equipment provide a wide range of acceptable temperatures at the inlet to the equipment.

The Standards require [§112(c)] that all thermostats (including residential and non-residential thermostats) shall have setback capabilities with a minimum of four separate setpoints per 24 hour period.

System with DDC to the zone [§112(c)] are also required to have automatic demand shed controls as described later in this section.

Chapter ~~8~~ 10 describes mandated acceptance test requirements for thermostat control for packaged HVAC systems.

DRAFT

Hotel/Motel Guest Rooms and High-Rise Residential Dwellings Thermostats

§122(c)

The Standards require that thermostats in hotel and motel guest rooms have:

1. Numeric temperature setpoints in °F, and

~~3.~~2. Setpoint stops that prevent the thermostat from being adjusted outside the normal comfort range. These stops must be concealed so that they are accessible only to authorized personnel.

The Standards effectively prohibit thermostats having 'warmer/cooler' or other labels with no temperature markings in this type of occupancy [§122(c)].

~~The Standards require [§122(c)] that thermostats in High-rise residential dwelling units must have setback capabilities and meet all the requirements in §150(i).~~

Perimeter Systems Thermostats

Supplemental perimeter heating or cooling systems are sometimes used to augment a space-conditioning system serving both interior and perimeter zones. This is allowed by §122(a) Exception, provided controls are incorporated to prevent the two systems from conflicting with each other. If that were the case, then the Standards require that:

A. The perimeter system must be designed solely to offset envelope heat losses or gains; and

B. The perimeter system must have at least one thermostatic control for each building orientation of 50 ft. or more; and

C. The perimeter system is controlled by at least one thermostat located in one of the zones served by the system.

The intent is that all major exposures be controlled by their own thermostat, and that the thermostat be located within the conditioned perimeter zone. Other temperature controls, such as outdoor temperature reset or solar compensated outdoor reset, do not meet these requirements of the Standards.

DRAFT

Example 4-19~~23~~

Question

What is the perimeter zoning required for the building shown here?

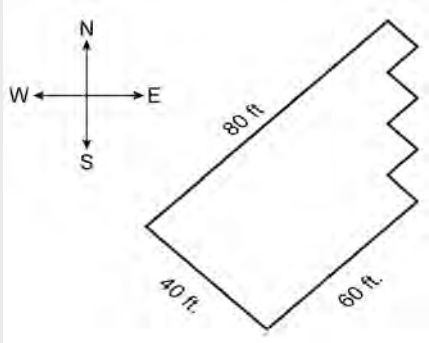

Answer

The southeast and northwest exposures must each have at least one perimeter system control zone, since they are more than 50 ft. in length. The southwest exposure and the serrated east exposure do not face one direction for more than 50 continuous ft. in length. They are therefore "minor" exposures and need not be served by separate perimeter system zones, but may be served from either of the adjacent zones.

Example 4-20~~24~~

Question

Pneumatic thermostats are proposed to be used for zone control. However, the model specified cannot be adjusted to meet the range required by §122(a) to (c). How can this system comply?

Answer

Section 122(a) to (c) applies to "thermostatic controls" which can be a system of thermostats or control devices, not necessarily a single device. In this case, the requirement could be met by using multiple thermostats. The pneumatic thermostats could be used for zone control during occupied hours and need only have a range consistent with occupied temperatures (e.g. 68°F to 78°F), while two additional electric thermostats could be provided, one for setback control (adjustable down to 55°F) and one for set-up (adjustable up to 85°F). These auxiliary thermostats would be wired to temporarily override the system to maintain the setback/setup setpoints during off-hours.

Shut-off and Temperature Setup/Setback

§122(e)

DRAFT

For specific occupancies and conditions, each space-conditioning system must be provided with controls that can automatically shut off the equipment during unoccupied hours. The control device can be either:

1. An automatic time switch device must have the same characteristics that lighting devices must have, as described in §119(c). This can be accomplished with a seven-day programmable thermostat with a ~~battery~~ backup capabilities that prevents the device's schedule for at least seven days, and time and date for at least 72 hours if the power is lost.~~of at least 10 hours.~~
2. A manual override accessible to the occupants must be included in the control system design either as a part of the control device, or as a separate override control. This

override shall allow the system to operate up to four hours during normally unoccupied periods.

3. An occupancy sensor. Since a building ventilation purge is required prior to normal occupancy [§121(c)2], an occupancy sensor may be used to control the availability of heating and cooling, but should not be used to control the outdoor ventilation system.
4. When an automatic time switch is used to control ventilation while occupancy sensors are used simultaneously to control heating and cooling, the controls should be interlocked so that ventilation is provided during off-hours operation.
5. Where ventilation is provided by operable openings (see discussion on natural ventilation in Section 0~~14.3~~ above) an occupant sensor can be used without interlock.
6. A four-hour timer that can be manually operated to start the system. As with occupancy sensors, the same restrictions apply to controlling outdoor air ventilation systems.

When shut down, the controls shall automatically restart the system to maintain:

1. A setback heating thermostat setpoint, if the system provides mechanical heating. Thermostat setback controls are not required in nonresidential buildings in areas where the Winter Median of Extremes outdoor air temperature is greater than 32°F [§122(e)2.A and Exception].
2. A setup cooling thermostat setpoint, if the system provides mechanical cooling. Thermostat setup controls are not required in nonresidential buildings in areas where the Summer Design Dry Bulb 0.5 percent~~%~~ temperature is less than 100°F [§122(e)2.B and Exception].

Example 4-21~~25~~

Question

Can occupancy sensors be used in an office to shut off the VAV boxes during periods the spaces are unoccupied?

Answer

Only if the ventilation is provided through operable openings. With a mechanical ventilation design the occupancy sensor could be used to reduce the VAV box airflow to the minimum allowed for ventilation. It should not shut the airflow off completely, because §121(c) requires that ventilation be supplied to each space at all times when the space is usually occupied.

Example 4-22~~26~~

Question

Must a 48,000 ft^2 building with 35 fan coil units have 35 time switches?

Answer

DRAFT

No. More than one space-conditioning system may be grouped on a single time switch, subject to the area limitations required by the isolation requirements (see Isolation). In this case, the building would need two isolation zones, each no larger than 25,000 ft^2, and each having its own time switch.

Example 4-27

Question

Can a thermostat with setpoints determined by sensors (such as a bi-metal sensor encased in a bulb) be used to accomplish a night setback?

Answer

Yes. The thermostat must have two heating sensors, one each for the occupied and unoccupied temperatures. The controls must allow the setback sensor to override the system shutdown.

DRAFT

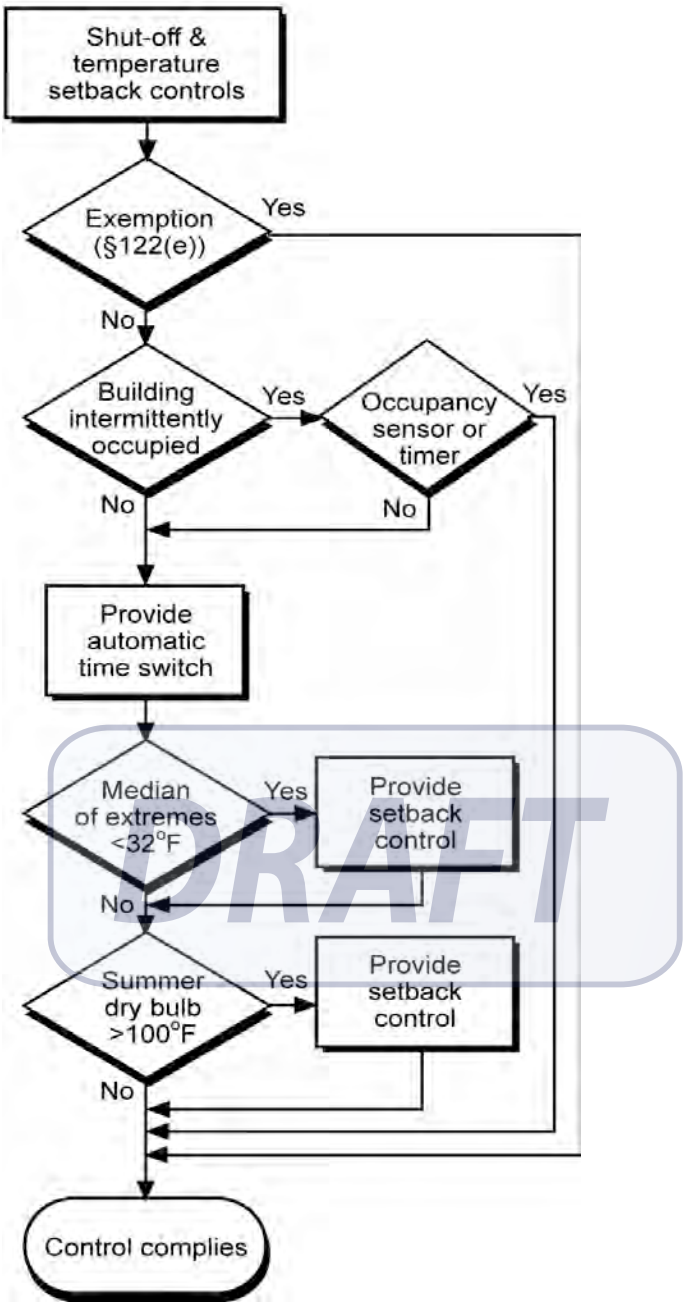

Figure 4-11~~11~~ – Shut-Off and Setback Controls Flowchart

These provisions are required by the Standards to reduce the likelihood that shut-off controls will be circumvented to cause equipment to operate continuously during unoccupied hours.

Automatic shut-off, setback and setup devices are not required where:

1. It can be demonstrated to the satisfaction of the enforcement agency that the system serves an area that must operate continuously [§122(e) Exception No. 1]; or
2. It can be demonstrated to the satisfaction of the enforcement agency that shutdown, setback, and setup will not result in a

decrease in overall building source energy use [§122(e) Exception No. 2)]; or

3. *Systems* have a full load demand less than 2 kW, or 6,826 Btu/h, if they have a readily accessible manual shut-off switch [§122(e) Exception No. 3]. Included is the energy consumed within all associated space-conditioning systems including compressors, as well as the energy consumed by any boilers or chillers that are part of the system.
4. Systems serve hotel/motel guest rooms, if they have a readily accessible manual shut-off switch [§122(e) Exception No.4].
5. The mechanical system serves retail stores and associated malls, restaurants, grocery stores, churches, or theaters equipped with a seven-day programmable timer.

Example 4-23~~28~~

Question

If a building has a system comprised of 30 fan coil units, each with a 300-watt fan, a 500,000 Btu/h boiler, and a 30-ton chiller, can an automatic time switch be used to control only the boiler and chiller (fan coils operate continuously)?

Answer

No. The 2 kW criteria applies to the system as a whole, and is not applied to each component independently. While each fan coil only draws 300 W, they are served by a boiler and chiller that draw much more. The consumption for the system is well in excess of 2 kW.

Assuming the units serve a total area of less than 25,000 ft^2 (see Isolation), one time switch may control the entire system.

DRAFT

Infiltration Control

§122(f)

Outdoor air supply and exhaust equipment must incorporate dampers that automatically close when fans shut down. The dampers may either be motorized, or of the gravity type.

Damper control is not required where it can be demonstrated to the satisfaction of the enforcement agency that the space-conditioning system must operate continuously [§122(f) Exception No. 1]. Nor is damper control required on gravity ventilators or other non-electrical equipment, provided that readily accessible manual controls are incorporated [§122(f) Exception No. 2].

Damper control is also not required at combustion air intakes and shaft vents, or where prohibited by other provisions of law [§122(f) Exceptions No. 3 and 4]. If the designer elects to install dampers or shaft vents to help control stack-induced infiltration, the damper should be motorized and controlled to open in a fire in accordance with applicable fire codes.

Isolation Area Controls

§122(g)

Large space-conditioning systems serving multiple zones may waste considerable quantities of energy by conditioning all zones when only a few zones are occupied. Typically, this occurs during evenings or weekends when only a few people are working. When the total area served by a system exceeds 25,000 ft^2, the Standards require that the system be designed, installed and controlled with area isolation devices to minimize energy consumption during these times. The requirements are:

1. The building shall be divided into isolation areas, the area of each not exceeding 25,000 ft^2. An isolation area may consist of one or more zones.
2. An isolation area cannot include spaces on different floors.
3. Each isolation area shall be provided with isolations devices such as valves or dampers that allow the supply of heating or cooling to be setback or shut off independently of other isolation areas.
4. Each isolation area shall be controlled with an automatic time switch, occupancy sensor, or manual timer. The requirements for these shut-off devices are the same as described previously in §122(e)1. As discussed previously for occupancy sensors, a building purge must be incorporated into the control sequences for normally occupied spaces, so occupancy sensors and manual timers are best limited to use in those areas that are intermittently occupied.

Any zones requiring continuous operation do not have to be included in an isolation area.

DRAFT

Example 4-24~~29~~

Question

How many isolation zones does a 55,000-ft^2 building require?

Answer

At least three. Each isolation zone may not exceed 25,000-ft^2.

Isolation of Zonal Systems

Small zonal type systems such as water loop heat pumps or fan coils may be grouped on automatic time switch devices, with control interlocks that start the central plant equipment whenever any isolation area is occupied. The isolation requirements apply to equipment supplying heating and cooling only; central ventilation systems serving zonal type systems do not require these devices.

Isolation of Central Air Systems

Figure 4-12~~Figure 4-12~~ below depicts four methods of area isolation with a central variable air volume system:

1. On the lowest floor programmable DDC boxes can be switched on a separate time schedule for each zone or blocks of zones. When unoccupied, the boxes can be programmed to have zero minimum volume setpoints and unoccupied setback/setup setpoints. Note this form of isolation can be used for sections of a single floor distribution system.
2. On the second floor, normally closed pneumatic or electric VAV boxes are used to isolate zones or groups of zones. In this scheme the control source (pneumatic air or control power) for each group is switched on a separate control signal from an individual time schedule. Again this form of isolation can be used for sections of a single floor distribution system.
3. On the third floor isolation is achieved by inserting a single motorized damper on the trunk of the distribution ductwork. With the code requirement for fire/smoke dampers (see next bullet) this method is somewhat obsolete. When applied this method can only control a single trunk duct as a whole. Care must be taken to integrate the motorized damper controls into the fire/life safety system.
4. On the top floor a combination fire smoke damper is controlled to provide the isolation. Again this control can only be used on a single trunk duct as a whole. Fire/smoke dampers required by code can be used for isolation at virtually no cost provided that they are wired so that the fire life-safety controls take precedence over off-hour controls. (Local fire officials generally allow this dual usage of smoke dampers since it increases the likelihood that the dampers will be in good working order in the event of a fire.)

Note that no isolation devices are required on the return.

DRAFT

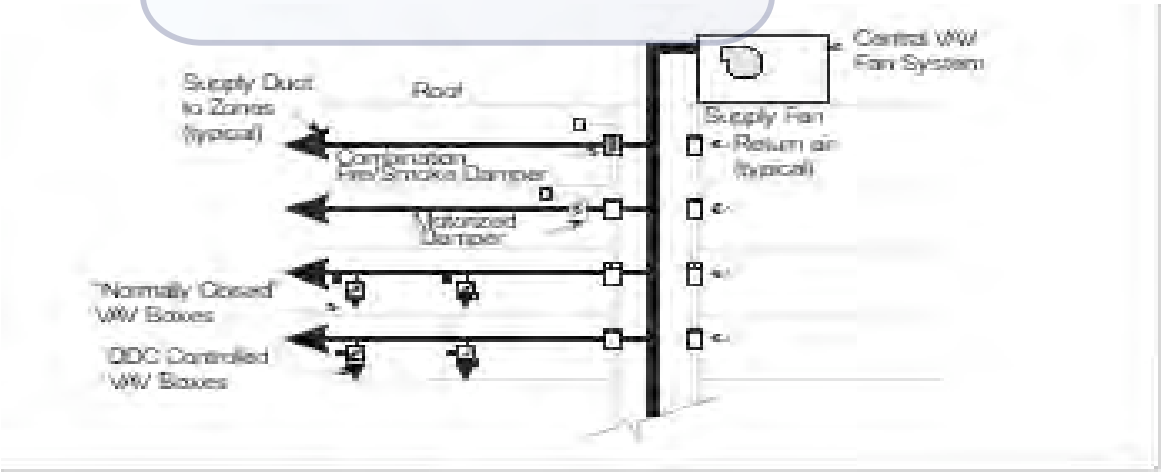

Figure 4-1212– Isolation Methods for a Central VAV System

Example 4-25~~30~~

Question

Does each isolation area require a ventilation purge?

Answer

Yes. Consider each isolation area as if it were a separate air handling system, each with its own time schedule, setback and setup control, etc.

Turndown of Central Equipment

Where isolation areas are provided it is critical that the designer design the central systems (fans, pumps, boilers and chillers) to have sufficient stages of capacity or turndown controls to operate stably as required to serve the smallest isolation area on the system. Failure to do so may cause fans to operate in surge, excessive equipment cycling and loss of temperature control. Schemes include:

1. Application of demand based supply pressure reset for VAV fan systems. This will generally keep variable speed driven fans out of surge and can provide 10:1 turndown.
2. Use of pony chillers, an additional small chiller to be used at partial load conditions, or unevenly split capacities in chilled water plants. This may be required anyway to serve 24/7 loads.
3. Unevenly split boiler plants.

DRAFT

Automatic Demand Shed Controls

§122(h)

HVAC systems with DDC to the zone level must be programmed to allow centralized demand shed for non-critical zones as follows:

1. The controls shall have a capability to remotely setup the operating cooling temperature set points by four degrees or more in all non-critical zones on signal from a centralized contact or software point within an Energy Management Control System (EMCS).

2. The controls shall remotely setdown the operating heating temperature set points by four degrees or more in all non-critical zones on signal from a centralized contact or software point within an EMCS.

3. The controls shall have capabilities to remotely reset the temperatures in all non critical zones to original operating levels on signal from a centralized contact or software point within an EMCS.

4. The controls shall be programmed to provide an adjustable rate of change for the temperature setup and reset.

The Standard defines a critical zone as a zone serving a process where reset of the zone temperature setpoint during a demand shed event might disrupt the process, including but not limited to data centers, telecom/private branch exchange (PBX) rooms, and laboratories.

To comply with this requirement each non-critical zone temperature control loop will need a switch that adds in an offset on the cooling temperature setpoint on call from a central demand shed signal. A rate of change limiter can either be built into the zone control or into the functional block for the central offset value. The central demand shed signal can be activated either through a global software point or a hardwired digital contact.

This requirement is enhanced with an acceptance test to ensure that the system was programmed as required.

Control Equipment Certification

§119(d)

Where used in HVAC systems, occupancy sensors must be certified to the Energy Commission prior to specification or use that they comply with the requirements of §119(d). These requirements are described in Chapter 5.

Automatic time switches must meet the requirements of §119(c). These also are described in Chapter 5. When used solely for mechanical controls they are not required to be certified by the Energy Commission. Most standard programmable thermostats and DDC system comply with these requirements. Time controls for HVAC systems must have a readily accessible manual override that can provide up to four hours of off-hour control.

CO_2 sensors used in DCV systems used to require certification to and approval by the CEC. This has been replaced by certification by the manufacture [§121(c) 4.F.] and the acceptance requirements described in Section 0~~14.3~~ 4.3 Ventilation Requirements~~Ventilation Requirements~~.

4.5.2 Prescriptive Requirements

Space Conditioning Zone Controls

§144(d)

Each space-conditioning zone shall have controls that prevent:

1. Reheating of air that has been previously cooled by mechanical cooling equipment or an economizer.
2. Recooling of air that has been previously heated. This does not apply to air returned from heated spaces.
3. Simultaneous heating and cooling in the same zone, such as mixing or simultaneous supply of air that has been previously mechanically heated and air that has been previously cooled, either by cooling equipment or by economizer systems.

These requirements do not apply to zones having:

1. VAV controls, as discussed in the following section.
2. Special pressurization relationships or cross contamination control needs. Laboratories are an example of spaces that might fall in this category.
3. Site-recovered or site-solar energy providing at least 75 percent~~%~~ of the energy for reheating, or providing warm air in mixing systems.
4. Specific humidity requirements to satisfy process needs.

~~4. 300 cfm or less peak supply air quantity. This exception allows reheating or recooling to be used in small sub-zones served by constant volume systems.~~

VAV Zone Controls

§144(d) Exception No. 1

To save fan and reheat energy while providing adequate comfort and ventilation, zones served by variable air-volume systems that are designed and controlled to reduce, to a minimum, the volume of reheated, re-cooled, or mixed air supply are allowed only if the controls meet the following requirements:

A. For each zone with direct digital controls (DDC):

1. The volume of primary air that is reheated, re-cooled, or mixed air supply shall not exceed the larger of:

a. 50 percent of the peak primary airflow; or

b. The design zone outdoor airflow rate per ~~Section~~ §121.

2. The primary airflow in the deadband shall not exceed the larger of:

a. 20 percent of the peak primary airflow; or

b. The design zone outdoor airflow rate per ~~Section~~§-121.

3. Airflow between deadband and full heating or full cooling must be modulated.

B. For each zone without DDC, the volume of primary airflow that is reheated, re-cooled, or mixed air supply shall not exceed the larger of the following:

1. 30 percent of the peak primary airflow; or

DRAFT

2. The design zone outdoor airflow rate per ~~Section~~ §121.

For systems with DDC to the zone level the controls must be able to support two different maximums.

~~Section 144(d) limits the highest allowable minimum airflow setpoints in order to minimize reheat energy. The minimum setpoint must be no greater than the largest of the following:~~

~~H. 30% of the peak supply volume; or~~

~~H. The minimum required to meet the ventilation requirements of §121; or~~

~~H. 0.4 cfm per ft^2 of conditioned floor area of the zone; or~~

~~H. 300 cfm.~~

~~The first limit, 30% of the maximum supply air, is intended to provide sufficient airflow to VAV system diffusers to minimize stratification, dumping, and short-circuiting.~~

~~The second limit is to ensure minimum ventilation rates can be maintained. Note that since the Standards allow air transferred or returned from other ventilated spaces to be used for ventilation, the minimum airflow setpoint need not be adjusted for the fraction of "fresh" air that is in the supply air. In other words, if the minimum ventilation rate is 0.15 cfm/ft^2, then the minimum airflow setpoint may be set to that value even if the supply air is not 100% outdoor air, provided the design minimum outdoor air at the air handler is delivered to some other spaces served by the system. Also note that unless transfer air is provided, e.g. from a fan-powered mixing box, this second criterion also is the lowest minimum airflow setpoint allowed by the Standards since ventilation rates must be maintained whenever the space is expected to be occupied.~~

~~The third limit, 0.4 cfm/ft^2, is provided to provide a minimum amount of air circulation, which many designers feel is needed for comfort. However, research and field studies have shown that there is very little correlation between airflow and comfort, and that most complaints of "stuffiness" are actually driven by space temperature.~~

~~The fourth limit, 300 cfm, is provided to allow for a few small constant volume subzones such as a lobby served off of an adjacent office zone.~~

~~In common practice, VAV box minimums are set much higher than they need to be. In the buildings surveyed as part of recent research[2] the box minimums~~

DRAFT

[2] Part of a Public Interest Energy Research (PIER) project.

~~ranged between 30 and 50% of design airflow, despite Standards limits that require lower values. Unfortunately, this common practice significantly increases reheat fan, and cooling energy usage.~~

Where VAV boxes have direct digital controls, energy ~~can~~ will be saved by employing a "dual-maximum" VAV box control. This is depicted in Figure 4-13~~Figure 4-13~~ below. In cooling, this control scheme is similar to a traditional VAV reheat box control. The difference is what occurs in the deadband between heating and cooling and in the heating mode. With traditional VAV control logic, the minimum airflow rate is typically set to the largest rate allowed by code. This airflow rate is supplied to the space in the deadband and heating modes. With the dual maximum logic, the minimum rate is the lowest allowed by code (e.g. the minimum ventilation rate) or the minimum rate the controls system can be set to (which is a function of the VAV box velocity pressure sensor amplification factor and the accuracy of the controller to convert the velocity pressure into a digital signal). As the heating demand increases, the dual maximum control first resets the discharge air temperature (typically from the design cold deck temperature up to 85 or 90°F) as a first stage of heating then, if more heat is required, it increases airflow rate up to a "heating" maximum airflow setpoint, which is the same value as what traditional control logic uses as the minimum airflow setpoint. Using this control can save significant fan, reheat and cooling energy while maintaining better ventilation effectiveness as the discharge heating air is controlled to a temperature that will minimize stratification.

This control requires a discharge air sensor and may require a programmable VAV box controller. The discharge air sensor is very useful for diagnosing control and heating system problems even if they are not actively used for control.

DRAFT

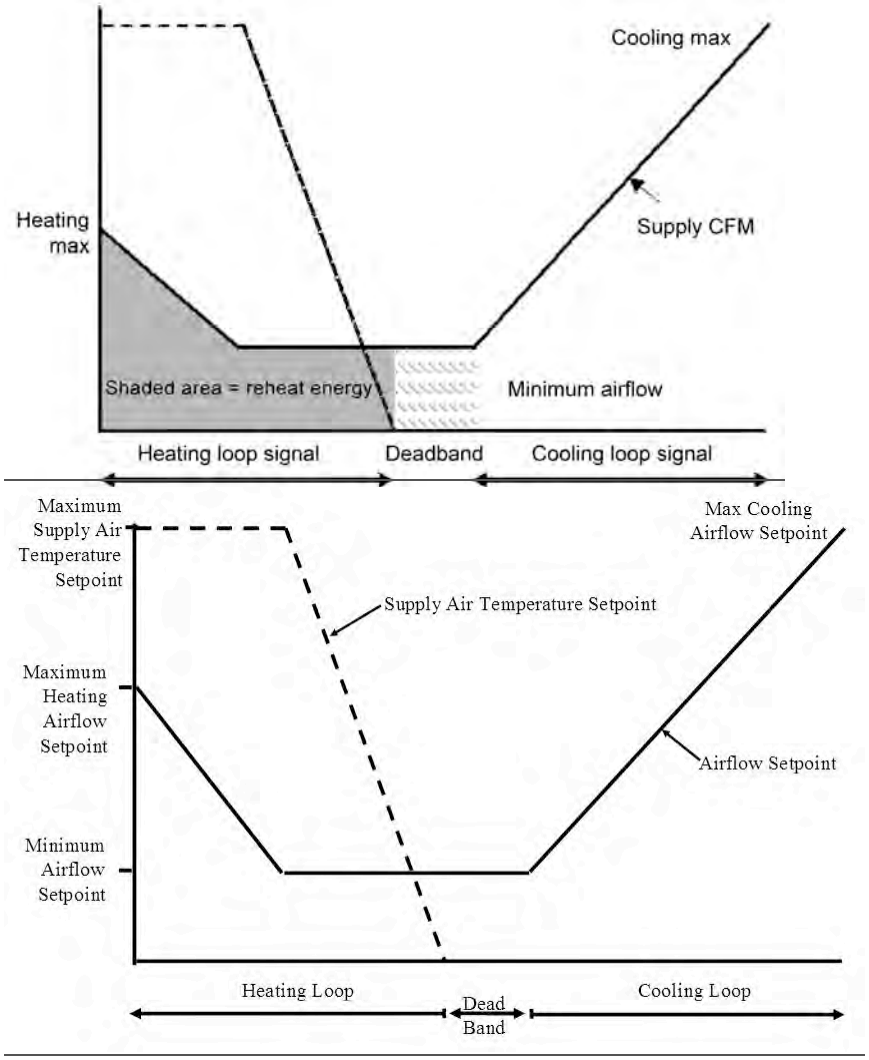

Figure 4-13~~13~~ – Dual-Maximum VAV Box Control Diagram

For ~~S~~systems without DDC to the zone (such as electric or pneumatic thermostats), the airflow that is reheated is limited to a maximum of the larger either 30 percent~~%~~ of the peak primary airflow or the minimum airflow required to ventilate the space.

DRAFT

Example 4-26~~31~~

Question

What are the limitations on VAV box minimum airflow setpoint for a 1000 ft^2 office having a design supply of 1100 cfm and eight people?

Answer

For a zone with pneumatic thermostats~~Based on reheat requirements~~, the minimum cfm cannot exceed the larger of:

a. 1100 cfm x 30% = 330 cfm; or

b. The minimum ventilation rate which is the larger of

1) 1000 ft² x 0.15 cfm/ft² = 150 cfm; and

2) 8 people x 15 cfm/person = 120 cfm

~~c. 1000 ft² x 0.4 cfm/ft² = 400 cfm; and~~

~~d. 300 cfm~~

Thus the minimum airflow setpoint can be no larger than ~~400~~ 330 cfm.

For a zone with DDC to the zone, the minimum cfm in the deadband cannot exceed the larger of:

a. 1100 cfm x 20% = 220 cfm; or

b. The minimum ventilation rate which is the larger of

1) 1000 ft² x 0.15 cfm/ft² = 150 cfm; and

2) 8 people x 15 cfm/person = 120 cfm

Thus the minimum airflow setpoint in the dead band can be no larger than 220 cfm. And this can rise to 1100 cfm X 50% or 550 cfm at peak heating.

~~Based~~ For either control system, based on ventilation requirements, the lowest minimum airflow setpoint must be at least 150 cfm, or transfer air must be provided in this amount.

Economizers

§144(e)

An economizer must be fully integrated and must be provided for each individual cooling space-conditioning system that has a design supply capacity over 2,500 cfm and a total cooling capacity over 75,000 Btu/h. The economizer may be either:

1. An air economizer capable of modulating outside air and return air dampers to supply 100 percent~~%~~ of the design supply air quantity as outside air; or
2. A water economizer capable of providing 100 percent~~%~~ of the expected system cooling load at outside air temperatures of 50°F dry-bulb and 45°F wet-bulb and below.

Depicted below in Figure 4-14~~Figure 4-14~~ is a schematic of an air-side economizer. All air-side economizers have modulating dampers on the return and outdoor air streams. To maintain acceptable building pressure, systems with airside economizer must have provisions to relieve or exhaust air from the building. In Figure 4-14~~Figure 4-14~~, three common forms of building pressure control are depicted: Option 1 barometric relief, Option 2 a relief fan generally controlled by building static pressure, and Option 3 a return fan often controlled by tracking the supply.

Figure ~~Figure 4-22~~ depicts an integrated air-side economizer control sequence. On first call for cooling the outdoor air damper is modulated from minimum position to 100 percent~~%~~ outdoor air. As more cooling is required, the damper remains at 100 percent~~%~~ outdoor air as the cooling coil is sequenced on.

Graphics of water-side economizers are presented in Section **4.10**~~1.10~~ Glossary/Reference~~Glossary/Reference~~ at the end of this chapter.

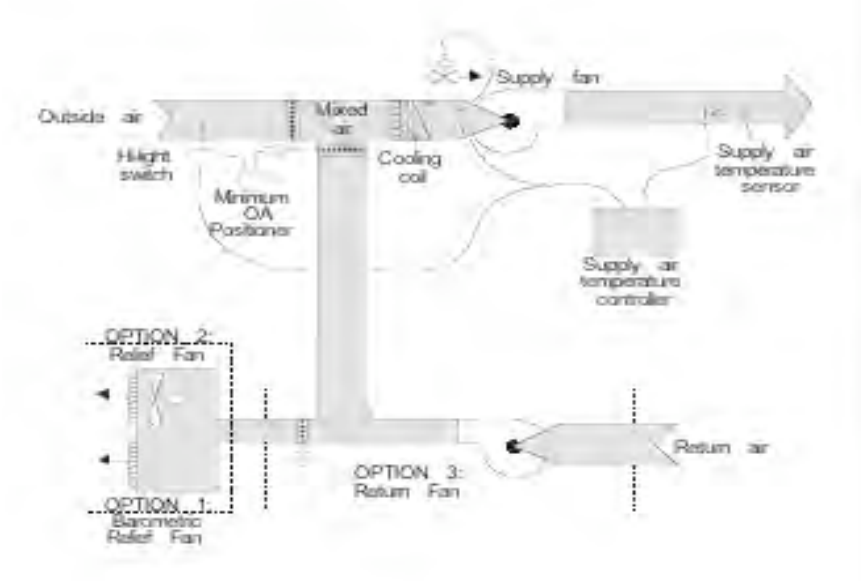

Figure 4-~~*14*~~*14 – Air-Side Economizer Schematic*

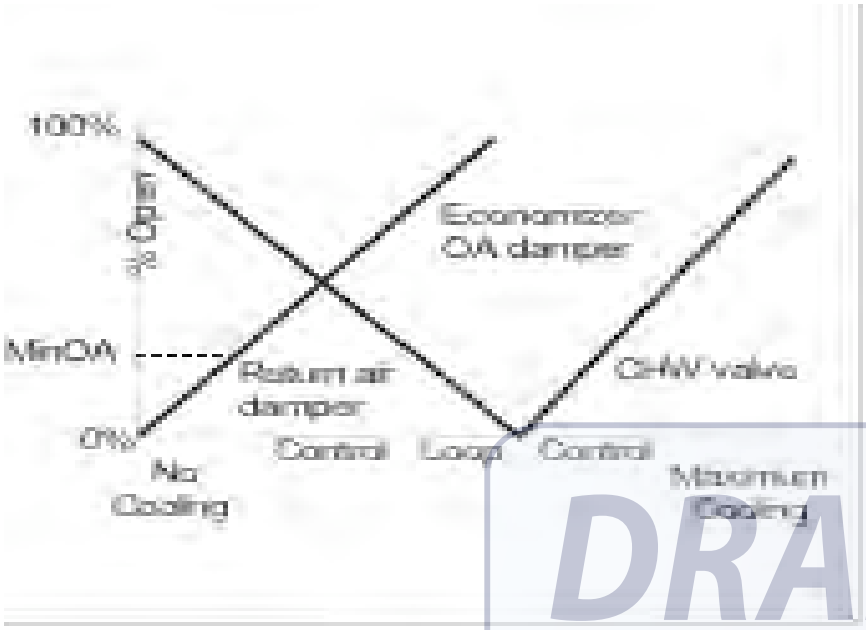

DRAFT

Figure ~~*4*~~*-*~~*15*~~*15 – Typical Air-Side Economizer Control Sequencing*

Economizers are not required where:

1. Outside air filtration and treatment for the reduction and treatment of unusual outdoor contaminants make compliance infeasible. This must be demonstrated to the satisfaction of the enforcement agency.
2. Increased overall building TDV energy use results. This may occur where economizers adversely impact other systems,

such as humidification, dehumidification or supermarket refrigeration systems.

3. Systems serving high-rise residential living quarters and hotel/motel guest rooms. Note that these buildings typically have systems smaller than 2,500 cfm, and also have provisions for natural ventilation.
4. Where it can be shown to the satisfaction of the enforcing agency that the use of outdoor air is detrimental to equipment or materials in a space or room served by a dedicated space conditioning system, such as a computer room or telecommunications equipment room.
5. If cooling capacity is less than or equal to 75,000 Btu/h, or supply airflow is less than or equal to 2,500 cfm.
6. When unitary air-conditioners or heat pumps have a rated efficiency that meets or exceeds the efficiency levels in Standards Table 144-A for unitary air-conditioners and (§144-B for unitary heat pumps. These tables present trade-off efficiency levels by climate zone (left column) and equipment size category (top row). Table cells marked with "N/A" for "not applicable" represent combinations of climate zones and size categories for which there is no trade-off available (i.e. and air-side economizer is always required).

If an economizer is required, it must be designed and equipped with controls that do not increase the building heating energy use during normal operation. This prohibits the application of single-fan dual-duct systems and traditional multizone systems using the Prescriptive Approach of compliance (see Figure 4-17~~Figure 4-17~~). With these systems the operation of the economizer to pre-cool the air entering the cold deck also precools the air entering the hot deck and thereby increases the heating energy. An exception allows these systems when at least 75 percent~~%~~ of the annual heating is provided by site-recovered or site-solar energy §144(e)2.A.

The economizer controls must also be fully *integrated* into the cooling system controls so that the economizer can provide partial cooling even when mechanical cooling is required to meet the remainder of the load §144(e)2.B. On packaged units with stand-alone economizers, a two-stage thermostat is necessary to meet this requirement.

The requirement that economizers be designed for concurrent operation is not met by some popular water economizer systems, such as those that use the chilled water system to convey evaporative-cooled condenser water for "free" cooling. Such systems can provide 100 percent~~%~~ of the cooling load, but when the point is reached where condenser water temperatures cannot be sufficiently cooled by evaporation, the system controls throw the entire load to the mechanical chillers. Because this design cannot allow simultaneous economizer and refrigeration system operation, it does not meet the requirements of this section.

Air-side economizers are required to have high-limit shut-off controls that comply with Table 144-C of the Standards. This table has four columns:

DRAFT

1. The first column identifies the high limit control category. There are five categories representing enthalpy and dry-bulb controls (fixed and differential and the electronic enthalpy controller.
2. The second column represents the California climate zone. “All” indicates that this control type complies in every California climate.
3. The third and fourth columns present the high-limit control setpoints required.

Fixed enthalpy controls are prohibited in climate zones ~~0~~1, ~~0~~2, ~~0~~3, ~~0~~5, 11, 13, 14, 15 & 16. In these climates, the enthalpy in the return air varies throughout the year and cannot be accurately represented by a fixed setpoint.

Air economizers, water economizers and integrated controls are discussed in more detail at the beginning of this Chapter.

Chapter ~~8~~10, Acceptance Requirements, describe mandated acceptance test requirements for economizers.

To reduce the time required to perform the economizer acceptance test, factory calibration and a calibration certificate of economizer control sensors (outdoor air temperature, return air temperature, etc.

DRAFT

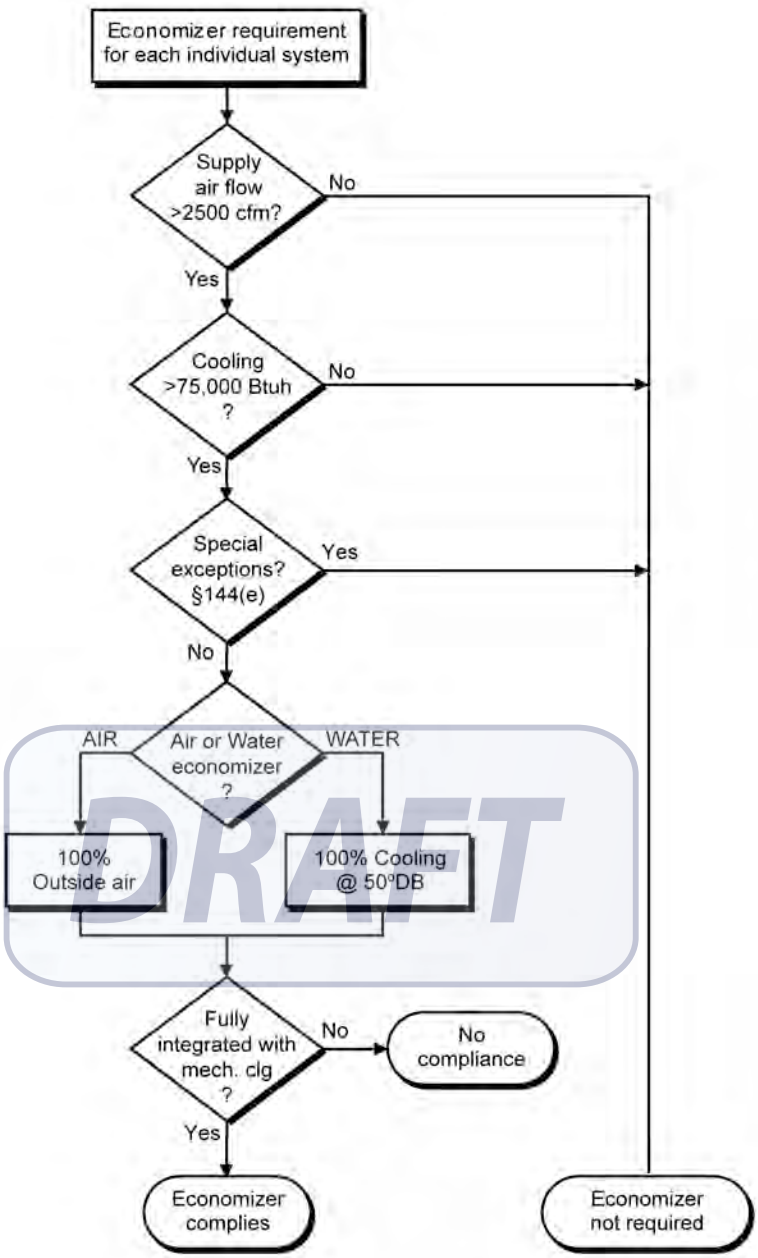

Figure 4-16 – Economizer Flowchart

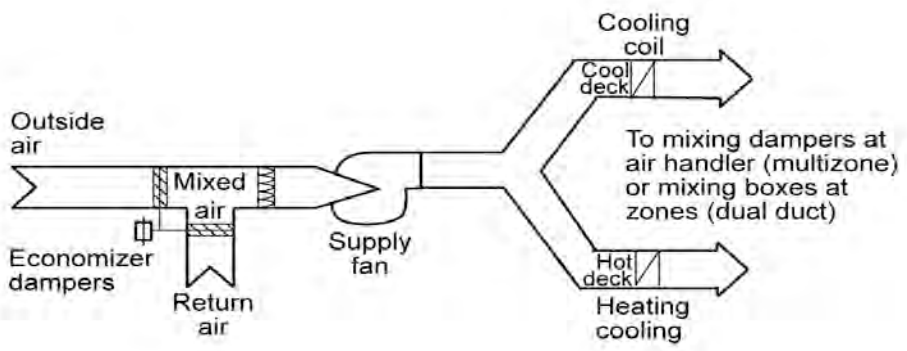

Figure 4-17~~17~~ – Single-Fan Dual-Duct System

Example 4-27~~32~~

Question

If my design conditions are 94°Fdb/82°Fwb can I use my design cooling loads to size a water-side economizer?

Answer

No. The design cooling load calculations must be rerun with the outdoor air temperature set to 50°Fdb/45°Fwb. The specified tower, as well as cooling coils and other devices, must be checked to determine if it has adequate capacity at this lower load and wet-bulb condition.

Example 4-28~~33~~

Question

Will a strainer cycle water-side economizer meet the prescriptive economizer requirements? (Refer to Figure 4-4~~Figure 4-4~~.)

Answer

No. It cannot be integrated to cool simultaneously with the chillers.

Example 4-29~~34~~

Question

Does a 12 ton packaged AC unit in climate zone 10 need an economizer?

Answer

Yes. However that requirement can be waived per exception 5 to §144(e)1 if the AC unit's efficiency is greater than or equal to an EER of 11.9. Refer to Standards Table 144-A.

DRAFT

Supply Pressure Controls for VAV Systems

§144(c)2

VAV systems with motors ~~> =~~≥ 10 hp are required to have either:

1. A mechanical or electrical variable speed drive fan motor;
2. Vane axial fan with variable pitch blades; or

3. Include controls that limit the fan motor demand to no more than 30 percent% of design wattage at 50 percent% design air volume when the static pressure set point is one-third of total design static pressure.

Actual fan part load performance, available from the fan manufacturer, should be used to test for compliance with item 3) above. Figure 4-18Figure 4-18 shows typical performance curves for different types of fans. As can be seen, both airfoil fans and backward inclined fans using either discharge dampers or inlet vanes consume more than 30 percent% power at 50 percent% flow when static pressure set point is one-third of total design static pressure using certified manufacturer's test data. These fans will not normally comply with these requirements unless a variable speed drive is used.

VAV fan systems that don't have DDC to the zone level are required to have the static pressure sensor located in a position such that the control setpoint is <=≤1/3 of the design static pressure of the fan. For systems without static pressure reset the further the sensor is from the fan the more energy will be saved. For systems with multiple duct branches in the distribution you must provide separate sensors in each branch and control the fan to satisfy the sensor with the greatest demand. When locating sensors, care should be taken to have at least one sensor between the fan and all operable dampers (e.g. at the bottom of a supply shaft riser before the floor fire/smoke damper) to prevent loss of fan static pressure control.

For systems with DDC to the zone level the sensor may be anywhere in the distribution system and the setpoint must be reset by the zone demand. Typically this is done by either controlling so that one VAV box damper is 95 percent% open or using a "trim and respond" algorithm to continually reduce the pressure until one or more zones indicate that they are unable to maintain airflow rate setpoints.

Reset of supply pressure by demand not only saves energy but it also protects fans from operation in surge at low loads. Chapter 810, Acceptance Requirements, describes mandated acceptance test requirements for VAV system fan control

DRAFT

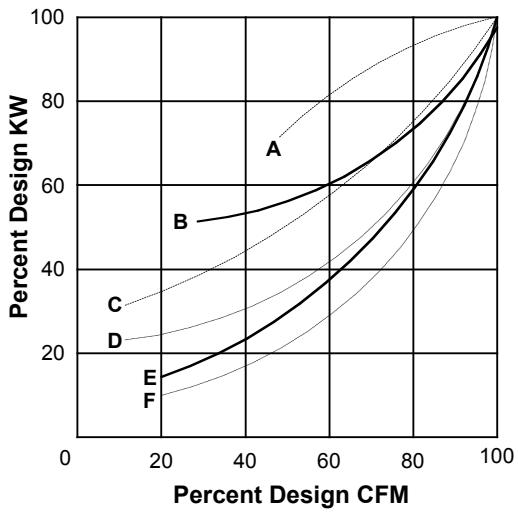

A. Air foil or backward inclined centrifugal fan with discharge dampers
B. Air foil centrifugal fan with inlet vanes
C. Forward curved centrifugal fan with discharge dampers or riding curve
D. Forward curved centrifugal fan with inlet vanes
E. Vane-axial fan with variable pitch blades
F. Any fan with variable speed drive (mechanical drives will be slightly less efficient)

Figure 4-18 – VAV Fan Performance Curve

Supply-Air Temperature Reset Control

§144(f)

Mechanical space-conditioning systems supplying heated or cooled air to multiple zones must include controls that automatically reset the supply-air temperature in response to representative building loads, or to outdoor air temperature. The controls must be capable of resetting the supply-air temperature by at least 25 percent~~%~~ of the difference between the design supply-air temperature and the design room air temperature.

For example, if the design supply temperature is 55°F and the design room temperature is 75°F, then the difference is 20°F, and 25 percent~~%~~ is 5°F. Therefore, the controls must be capable of resetting the supply temperature from 55°F to 60°F.

Air distribution zones that are likely to have constant loads, such as interior zones, shall have airflow rates designed to meet the load at the fully reset temperature. Otherwise, these zones may prevent the controls from fully resetting the temperature, or will unnecessarily limit the hours when the reset can be used.

Supply air reset is required for VAV reheat systems even if they have VSD fan controls ~~that don't use variable speed drives to control the supply fans. Although it is not required on VAV systems that have VSDs it is generally a good idea to provide it~~. ~~With DDC controls t~~The recommended control sequence is to lead with supply temperature setpoint reset in cool weather where reheat might dominate the equation and to keep the chillers off as long as possible, then return to a fixed low setpoint in warmer weather when the chillers are likely to be on. During reset, employ a demand-based control that uses the warmest supply air temperature that satisfies all of the zones in cooling.

This sequence is described as follows: during occupied mode, the setpoint is reset from T-min (53°F) when the outdoor air temperature is 70°F and above, proportionally up to T-max when the outdoor air temperature is 65°F and below.

T-max shall range from 55°F to 65°F and shall be the output of a slow reverse-acting proportional-integral (PI) loop that maintains the cooling loop of the zone served by the system with the highest cooling loop at a setpoint of 90 percent%. See Figure 4-19Figure 4-19.

Supply temperature reset is also required for constant volume systems with reheat justified on the basis of special zone pressurization relationships or cross-contamination control needs.

Supply-air temperature reset is not required when:

1. The zone(s) must have specific humidity levels required to meet process needs; or
2. Where it can be demonstrated to the satisfaction of the enforcement agency that supply air reset would increase overall building energy use; or
3. The space-conditioning zone has controls that prevent reheating and recooling and simultaneously provide heating and cooling to the same zone; or
4. Seventy five75 percent of the energy for reheating is from *site-recovered* or *site solar* energy source; or
4. The system is variable air volume and the supply fan is provided with a variable speed drive; or
5. The zone has a peak supply air quantity of 300 cfm or less.

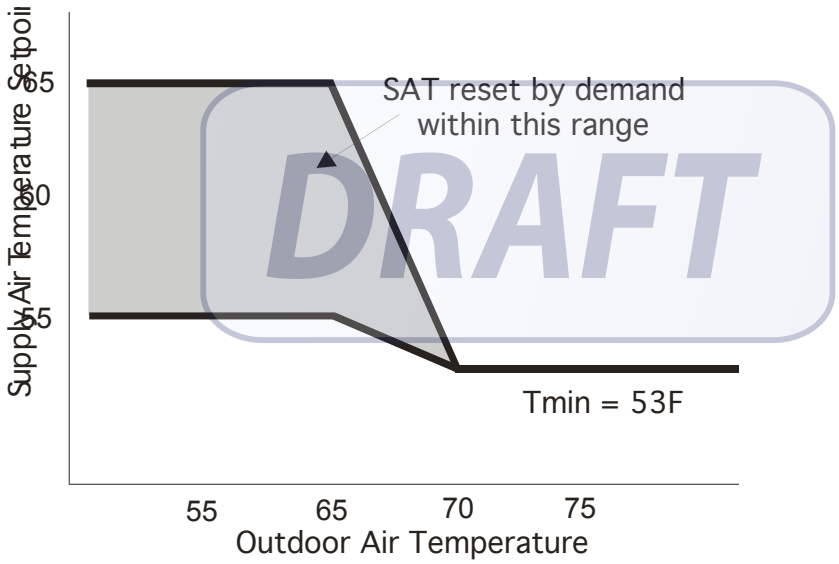

Figure 4-1919 – Energy Efficient Supply Air Temperature Reset Control for VAV Systems
Recommended Supply Air Temperature Reset Method

Heat Rejection Fan Control

(§144(h)2)

The fans on cooling towers, closed-circuit fluid coolers, air-cooled condensers and evaporative condensers are required to have speed control except as follows:

1. Fans powered by motors smaller than 7.5 hp
2. Heat rejection devices included as an integral part of the equipment listed in the Standards Tables 112-A through 112-E. This includes unitary air-conditioners, unitary heat pumps, packaged chillers and packaged terminal heat pumps.
3. Condenser fans serving multiple refrigerant circuits or flooded condensers.
4. Up to 1/3 of the fans on a condenser or tower with multiple fans where the lead fans comply with the speed control requirement.

Where applicable, two-speed motors, pony motors or variable speed drives can be used to comply with this requirement.

Example 4-30~~35~~

Question

A chilled water plant has a three-cell tower with 10 hp motors on each cell. Are speed controls required?

Answer

Yes. At minimum the designer must provide 2-speed motors, pony motors or variable speed drives on two of the three fans for this tower.

DRAFT

Hydronic System Controls

§144(j)

The ~~2005~~ Standards ~~features new~~ requirements for hydronic system controls. These include:

1. Design of systems for variable flow [§144(j)1].
2. Chiller and boiler Isolation [§144(j)2 and 3].
3. Chilled and hot water reset [§144(j)4].
4. Isolation valves for water-loop heat pump systems [§144(j)5].
5. VSDs for pumps serving variable flow systems [§144(j)6].
6. Hydronic Heat Pump (WLHP) Controls [§144(j)7].

Each of these is described in the paragraphs that follow and Chapter ~~8~~10, Acceptance Requirements, describes mandated acceptance test requirements for hydronic system controls.

Design of Systems for Variable Flow §144(j)1

Hot water and chilled water systems ~~that have more than 3 control valves~~ are required to be designed for variable flow. Aside from chiller plants serving three air handling units or less, this covers most systems. Variable flow is provided by using 2-way control valves. The Standards only requires that flow is reduced to the greater of 50 percent~~%~~ design flow or the minimum flow required by the equipment manufacturer for operation of the central plant equipment. There are two exceptions for this requirement:

1. Systems that include no more than three control valves, and
2. Systems having a total pump system power less than or equal to 1-1/2 HP

It is not necessary for each individual pump to meet the he variable flow requirement of §144(j)1; these requirements can be met can be met by varying the total flow for the entire pumping system in the plant. Strategies that can be used to meet these requirements include but are not limited to variable frequency drives on pumps and staging of the pumps.

It should be noted that the primary loop on a primary/secondary or primary/secondary/tertiary system can be designed for constant flow even if the secondary or tertiary loop serves more than 3 control valves. This is allowed because the primary loop does not directly serve any coil control valves. However the secondary (and tertiary loops) of these systems must be designed for variable flow if they have 4 or more control valves.

The flow limitations are provided for primary-only variable flow chilled water systems where a minimum flow is typically required to keep a chiller on-line. In these systems minimum flow can be provided with either a bypass with a control valve or some 3-way valves to ensure minimum flow at all times. The system with a bypass valve is more efficient as it only provides bypass when absolutely required to keep the plant on line.

For hot water systems application of slant-tube or bent tube boilers will provide the greatest flow turndown. Typically copper fin tube boilers require a higher minimum flow.

DRAFT

Chiller and Boiler Isolation(§144(j)2 and 3

Plants with multiple chillers or boilers are required to provide either isolation valves or dedicated pumps and check valves to ensure that flow will only go through the chillers or boilers that are staged on. Chillers that are piped in series for the purpose of increased temperature differential shall be considered as one chiller.

Chilled and Hot Water Reset §144(j)4

Similar to the requirements for supply air temperature reset, chilled and hot water systems that have a design capacity > 500,000 Btu/h are required to provide controls to reset the hot or cold water temperature setpoints as a function of building loads or the outdoor air temperature. This reset can be achieved either using a direct indication of demand (usually cooling or heating

valve position) or an indirect indication of demand (typically outdoor air temperature). On systems with DDC controls reset using valve position is recommended.

There is an exception to this requirement for hydronic systems that are designed for variable flow complying with §144(j)1.

Isolation Valves for Water-Loop Heat Pump Systems §144(j)5

Water circulation systems serving ~~Water-loop~~ water-cooled air conditioner and hydronic heat pump systems that have a design circulation pump brake horsepower >5 bhp are required to be provided with 2-way isolation valves that close whenever the compressor is off. These systems are also required to be provided with the variable speed drives and pressure controls described in the following section.

Although this is not required on central tenant condenser water systems (for water-cooled AC units and HPs) it is a good idea to provide the 2-way isolation valves on these systems as well. In addition to providing pump energy savings these 2-way valves can double as head-pressure control valves to allow aggressive condenser water reset for energy savings in chilled water plants that are also cooled by the towers.

VSDs for Pumps Serving Variable Flow Systems §144(j)6

Variable Flow Controls - Pumps on variable flow systems that have a design circulation pump brake horsepower > 5 bhp are required to have either variable speed drives or a different control that will result in pump motor demand of no more than 30 percent~~%~~ of design wattage at 50 percent~~%~~ of design water flow.

Pressure Sensor Location and Setpoint –

1. For systems without direct digital control of individual coils reporting to the central control panel,~~are controlled to provide~~ differential pressure must be measured at~~to~~ either the most remote heat exchanger or the heat exchanger requiring the most pressure. This includes chilled water systems, condenser water systems serving water-cooled air conditioning (AC) loads and water-loop heat pump systems.
2. For systems with direct digital control of individual coils with central control panel, the static pressure set point must be reset based on the valve requiring the most pressure, and the setpoint shall be no less than 80 percent~~%~~ open. The pressure sensor(s) may be mounted anywhere.

Exceptions are provided for hot-water systems and condenser water systems that only serve water-cooled chillers. The hot water systems are exempted because the heat from the added pumping energy of the pump riding the curve provides a beneficial heat that reduces the boiler use. This reduces the benefit from the reduced pumping energy.

-Hydronic Heat Pump (WLHP) Controls§144(j)7

Hydronic heat pumps connected to a common heat pump water loop with central devices for heat rejection and heat addition must have controls that are capable of providing a heat pump water supply temperature dead band of at least 20°F between initiation of heat rejection and heat addition by the central devices. Exceptions are provided Where a system loop temperature optimization controller is used to determine the most efficient operating temperature based on real-time conditions of demand and capacity, dead bands of less than 20°F shall be allowed.

Example 4-36

Question

In my plant, I am trying to meet the variable flow requirements of §144(j)1. Must each individual pump meet these requirements for the plant to comply with the Standards?

Answer

No, individual pumps do not need to meet the variable flow requirements of this section. As long as the entire plant meets the variable flow requirements, the plant is in compliance. For example, the larger pumps may be equipped with variable frequency drives or the pumps can be staged in a way that can meet these requirements.

4.5.3 Acceptance Requirements

There are a number of acceptance requirements related to control systems. These include:

D. Automatic time switch control devices.
E. Constant volume package unit.
F. Air-side economizers.
G. VAV supply fan controls.
H. Hydronic system controls.

These tests are described in Chapter ~~8~~10, Acceptance Requirements, as well as the ~~ACM Manual Appendices NG and NJ~~Reference Nonresidential Appendix NA7.

DRAFT

Single Zone VAV Controls

§144(l)

Effective January 1, 2012 all unitary air conditioning equipment and air-handling units with mechanical cooling capacity at ARI conditions greater than or equal to 110,000 Btu/hr that serve single zones shall be designed for variable supply air volume with their supply fans controlled by two-speed motors, variable speed drives, or equipment that has been demonstrated to the Executive Director to use no more energy. The supply fan controls shall modulate down to a minimum of two-thirds of the full fan speed or lower at low cooling demand.

4.6 HVAC System Requirements

The HVAC system requirements are all prescriptive requirements and may be modified in the whole building performance process. There are no mandatory measures or acceptance requirements.

4.6.1 Sizing and Equipment Selection

§144(a)

The Standards require that mechanical heating and cooling equipment (including electric heaters and boilers) be the smallest size available, within the available options of the desired equipment line, that meets the design heating and cooling loads of the building or spaces being served. Depending on the equipment, oversizing can be either a penalty or benefit to energy usage. For vapor compression equipment, gross oversizing can drastically increase the energy usage and in some cases cause premature failure from short cycling of compressors. Boilers and water-heaters generally suffer lower efficiencies and higher standby losses if they are oversized. On the other hand, cooling towers, cooling coils, and variable speed driven cooling tower fans can actually improve in efficiency if oversized. Oversized distribution ductwork and piping can reduce system pressure losses and reduce fan and pump energy.

When equipment is offered in size increments, such that one size is too small and the next is too large, the larger size may be selected.

Packaged HVAC equipment may serve a space having substantially different heating and cooling loads. The unit size should be selected on the larger of the loads, based on either capacity or airflow. The capacity for the other load should be selected as required to meet the load, or if very small, should be the smallest capacity available in the selected unit. For example, packaged air-conditioning units with gas heat are usually sized on the basis of cooling loads. The furnace is sized on the basis of airflow, and is almost always larger than the design heating load.

Equipment may be oversized provided one or more of the following conditions are met:

- It can be demonstrated to the satisfaction of the enforcing agency that oversizing will not increase building source energy use; or
- Oversizing is the result of standby equipment that will operate only when the primary equipment is not operating. Controls must be provided that prevent the standby equipment from operating simultaneously with the primary equipment; or
- Multiple units of the same equipment type are used, each having a capacity less than the design load, but in combination having a capacity greater than the design load. Controls must be provided to sequence or otherwise optimally control the operation of each unit based on load.

DRAFT

~~i.~~4.6.2 Load Calculations

§144(b)

For the purposes of sizing HVAC equipment, the designer shall use all of the following criteria for load calculations:

1. The heating and cooling system design loads must be calculated in accordance with the procedures described in the ASHRAE Handbook, ~~2001,~~ Fundamentals Volume, Chapter 30, Table 1. Other load calculation methods, e.g. ACCA, SMACNA, etc., are acceptable provided that the method is ASHRAE-based. When submitting load calculations of this type, the designer must accompany the load calculations with a written affidavit certifying that the method used is ASHRAE-based. If the designer is unclear as to whether or not the calculation method is ASHRAE-based, the vendor or organization providing the calculation method should be contacted to verify that the method is derived from ASHRAE.
2. Indoor design conditions of temperature and relative humidity for general comfort applications are not explicitly defined. Designers are allowed to use any temperature conditions within the "comfort envelope" defined by ANSI/ASHRAE 55-1992 or Chapter 8 of the ASHRAE Handbook~~, 2003~~, Fundamentals Volume. Winter humidification or summer dehumidification is not required.
3. Outdoor design conditions shall be selected from Reference Joint Appendix JA2~~II~~, which is based on data from the ASHRAE Climatic Data for Region X, for the following design conditions:
4. Heating design temperatures shall be no lower than the temperature listed in the Heating Winter Median of Extremes value.
5. Cooling design temperatures shall be no greater than the 0.5 percent~~%~~ Cooling Dry Bulb and Mean Coincident Wet Bulb values.
6. Outdoor Air Ventilation loads must be calculated using the ventilation rates required in §121. At minimum, the ventilation rate will be 15 cfm/person or 0.15 cfm/ft², whichever is greater.
7. Envelope heating and cooling loads must be calculated using envelope characteristics including square footage, thermal conductance, solar heat gain coefficient and air leakage, consistent with the proposed design.
8. Lighting loads shall be based on actual design lighting levels or power densities consistent with §146.
9. People sensible and latent gains must be based on the expected occupant density of the building and occupant activities. If ventilation requirements are based on a cfm/person basis, then people loads must be based on the

DRAFT

same number of people as ventilation. Sensible and latent gains must be selected for the expected activities as listed in ASHRAE Handbook~~, 2001~~, Fundamentals Volume, Chapter 29, Table 1.

10. Loads caused by a process shall be based on actual information (not speculative) on the intended use of the building.
11. Miscellaneous equipment loads include such things as duct losses, process loads and infiltration and shall be calculated using design data compiled from one or more of the following sources:
12. Actual information based on the intended use of the building; or
13. Published data from manufacturer's technical publications and from technical societies, such as the ASHRAE Handbook, ~~2003~~ HVAC Applications Volume; or
14. Other data based on the designer's experience of expected loads and occupancy patterns.
15. Internal heat gains may be ignored for heating load calculations. A safety factor of up to 10 percent~~%~~ may be applied to design loads to account for unexpected loads or changes in space usage.
16. Other loads such as warm-up or cool-down shall be calculated using one of the following methods:

A method using principles based on the heat capacity of the building and its contents, the degree of setback, and desired recovery time; or

The steady state design loads may be increased by no more than 30 percent~~%~~ for heating and 10 percent~~%~~ for cooling. The steady state load may include a safety factor of up to 10 percent~~%~~ as discussed above in Item 11.

The combination of safety factor and other loads allows design cooling loads to be increased by up to 21 percent~~%~~ (1.10 safety x 1.10 other), and heating loads by up to 43 percent~~%~~ (1.10 safety x 1.30 other).

Example 4-31~~36~~

Question

Do the sizing requirements restrict the size of duct work, coils, filter banks, etc. in a built-up system?

Answer

No. The intent of the Standards is to limit the size of equipment, which if oversized will consume more energy on an annual basis. Coils with larger face areas will usually have lower pressure drops than otherwise, and may also allow the chilled water temperature to be higher, both of which may result in a decrease in energy usage. Larger filter banks will also usually save energy. Larger duct work will have lower static pressure losses, which may save energy, depending on the duct's location, length, and degree of insulation.

Oversizing fans, on the other hand, may or may not improve energy performance. An oversized airfoil fan with inlet vanes will not usually save energy, as the part load characteristics of this device

DRAFT

are poor. But the same fan with a variable frequency drive may save energy. Controls are also an important part of any system design.

The relationship between various energy consuming components may be complex, and is left to the designer's professional judgment. Note however, that when components are oversized, it must be demonstrated to the satisfaction of the enforcement agency that energy usage will not increase.

4.6.3 Fan Power Consumption

§144(c)

Maximum fan power is regulated in individual fan systems where the total power of the supply, return and exhaust fans within the *fan system* exceed 25 horsepower at design conditions (see Section **4.10**~~14.10~~ for definitions). A system consists of only the components that must function together to deliver air to a given area; fans that can operate independently of each other comprise separate systems. Included are all fans associated with moving air from a given space-conditioning *system* to the conditioned spaces and back to the source, or to exhaust it to the outdoors.

The 25 horsepower total criteria apply to:

~~ii.~~1. All supply and return fans within the space-conditioning system that operate at peak load conditions.

~~iii.~~2. All exhaust fans at the system level that operate at peak load conditions. Exhaust fans associated with economizers are not counted provided they do not operate at peak conditions.

~~iv.~~3. Fan-powered VAV boxes, if these fans run during the cooling peak. This is always the case for fans in series type boxes. Fans in parallel boxes may be ignored if they are controlled to operate only when zone heating is required, and are normally off during the cooling peak.

~~v.~~4. Elevator equipment room exhausts, or other exhausts that draw air from a conditioned space, through an otherwise unconditioned space, to the outdoors.

5. Computer room units.

The criteria are applied individually to each space-conditioning system. In buildings having multiple space-conditioning systems, the criteria applies only to the systems having fans whose total demand exceeds 25 horsepower.

Not included are fans not directly associated with moving conditioned air to or from the space-conditioning system, or fans associated with a process within the building.

For the purposes of the 25 horsepower criteria, horsepower is the brake horsepower as listed by the manufacturer for the design conditions, plus any losses associated with the drive, including belt losses or variable frequency drive losses. If the brake horsepower is not known, then the nameplate horsepower should be used.

DRAFT

If drive losses are not known, the designer may assume that direct drive efficiencies are 1.0, and belt drives are 0.97. Variable speed drive efficiency should be taken from the manufacturer's literature; if it includes a belt drive, it should be multiplied by 0.97.

Total fan horsepower need not include the additional power demand caused solely by air treatment or filtering systems with final pressure drops of more than 1 in. water gauge (w.g.). It is assumed that conventional systems may have filter pressure drops as high as 1 in. w.g.; therefore only the horsepower associated with the portion of the pressure drop exceeding 1 in., or fan system power caused solely by process loads, may be excluded.

For buildings whose systems exceed the 25 horsepower criteria, the total space-conditioning system power requirements are:

1. Constant volume fan systems. The total fan power index at design conditions of each fan system with total horsepower over 25 horsepower shall not exceed 0.8 watts per cfm of supply air.
2. Variable air volume (VAV) systems.
   A. The total fan power index at design conditions of each fan system with total horsepower over 25 horsepower shall not exceed 1.25 watts per cfm of supply air; and
   B. Individual VAV fans with motors 10 horsepower or larger shall meet one of the following:
      i. The fan motor shall be driven by a mechanical or electrical variable speed drive.
      ii. The fan shall be a vane-axial fan with variable pitch blades.
      iii. For prescriptive compliance, the fan motor shall include controls that limit the fan motor demand to no more than 30 percent~~%~~ of the total design wattage at 50 percent~~%~~ of design air volume when static pressure set point equals 1/3 of the total design static pressure, based on certified manufacturer's test data.
   C. Static Pressure Sensor Location. Static pressure sensors used to control variable air volume fans shall be placed in a position such that the controller set point is no greater than one-third the total design fan static pressure, except for systems with zone reset control complying with §144 (c) 2 D. If this results in the sensor being located downstream of major duct splits, multiple sensors shall be installed in each major branch with fan capacity controlled to satisfy the sensor furthest below its setpoint.

DRAFT

D. Set Point Reset. For systems with direct digital control of individual zone boxes reporting to the central control panel, static pressure set point shall be reset based on the zone requiring the most pressure; i.e., the set point is reset lower until one zone damper is nearly wide open.

3. Air-treatment or filtering systems. For systems with air-treatment or filtering systems, calculate the adjusted fan power index using equation 144-A:

EQUATION 144-A ADJUSTED FAN POWER INDEX

Adjusted fan power index = Fan power index x Fan Adjustment = 1-(SPa - 1)/ SP

WHERE:

SPa = Air pressure drop across the air-treatment or filtering system.

SPf= Total pressure drop across the fan.

4. Fan motors of series fan-powered terminal units. Fan motors of series fan-powered terminal units 1 horsepower or less in shall be electronically-commutated motors or shall have a minimum motor efficiency of 70 percent~~%~~ when rated in accordance with NEMA Standard MG 1-1998 Rev. 2 at full load rating conditions.

The total system power demand is based on brake horsepower at design static and cfm, and includes drive losses and motor efficiency. If the motor efficiency is not known, values from ACM Manual Appendix NC may be used.

DRAFT

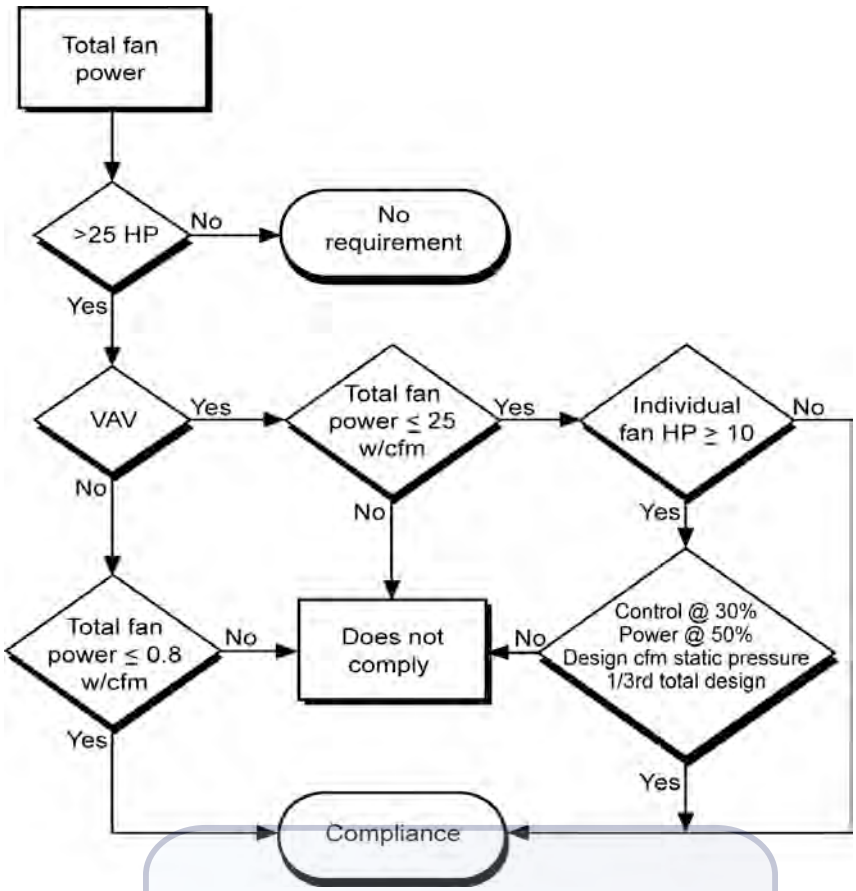

Figure 4-20 – Fan Power Flowchart

DRAFT

Example 4-32~~37~~

Question

In the system depicted below, which fans are included in the fan power criteria?

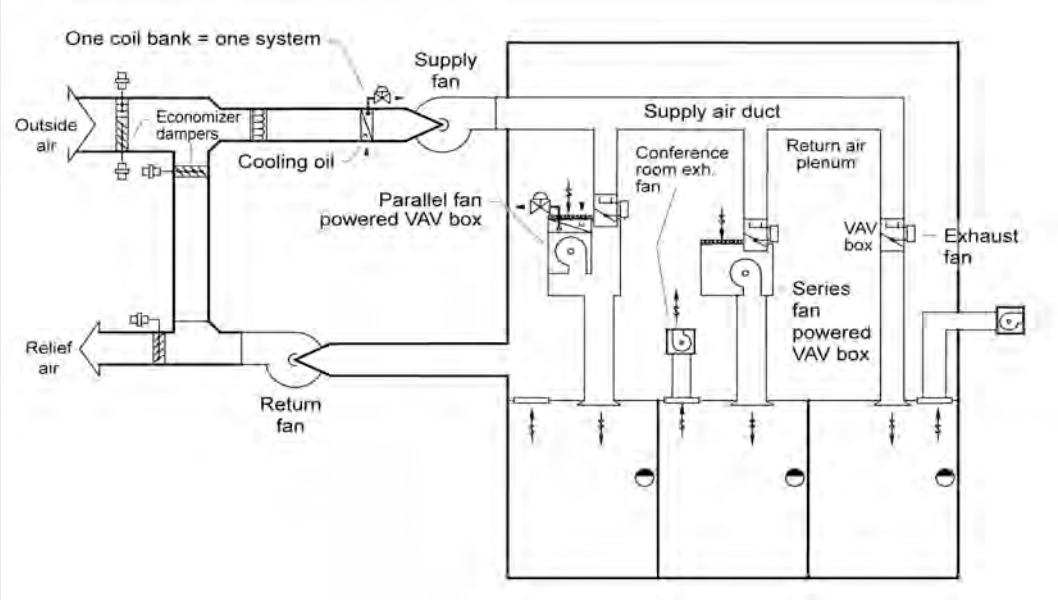

Answer

The fans included are those that operate during the design cooling load. These include the supply fan, the return fan, the series fan-powered VAV box(es), the general exhaust fan, and conference room exhaust fans other than those that are manually controlled. The parallel fan-powered VAV box(es) are not included as those fans only operate during a call for zone heating.

DRAFT

Example 4-33~~38~~

Question

If a building has five zones with 15,000 cfm air handlers that are served by a common central plant, and each air handler has a 15 HP supply fan, does the 25 HP limit apply?

Answer

No. Each air handler, while served by a common central plant, is a separate fan system. Since the demand of each air handler is only 15 HP, the 25 HP criteria does not apply.

Example 4-34~~39~~

Question

The space-conditioning system in a laboratory has a 30% filter with a design pressure drop at change out of 0.5 in. w.g., and an 80% filter with a design pressure drop of 1.2 in. w.g. The design total static pressure of the fan is 5.0 inch w.g. What percentage of the power may be excluded from the W/cfm calculation?

Answer

The total filter drop at change out (final pressure drop) is 0.5 in. + 1.2 in. = 1.7 in. w.g. The amount that may be excluded is 1.7 in.-1.0 in. = 0.7 in. w.g. The percentage of the horsepower that may be excluded is 0.7 in./5.0 in. = 14%

If the supply fan requires 45 brake horsepower, the adjusted horsepower of the supply fan in the W/cfm calculation is

45 BHP x (1 - 14%) = 38.7 BHP

The horsepower of any associated return or exhaust fan is not adjusted by this factor, as the filters have no impact on these fans.

Example 4-35~~40~~

Question

What is the maximum allowed power consumption for the fans in a VAV bypass system?

Answer

A VAV bypass, while variable volume at the zone level, is constant volume at the fan level. If the total fan power demand of this system exceeds 25 HP, then the fan power may not exceed 0.8 W/cfm.

Example 4-36~~41~~

Question

What is the power consumption of a 20,000 cfm VAV system having an 18 BHP supply fan, a 5 BHP return fan, a 3 BHP economizer relief fan, a 2 HP outside air ventilation fan and a 1 HP toilet exhaust fan? Note that the exhaust and outside air ventilation fans are direct drive and listed in HP not BHP. The supply and return fans are controlled with variable frequency drives having an efficiency of 96%.

Answer

The economizer fan is excluded provided it does not run at the time of the cooling peak.

Power consumption is then based on the supply; return, outdoor and toilet exhaust fans. The ventilation fan is direct drive so its efficiency is 1.0. The supply and return fans have default drive efficiencies of 0.97. From Tables NC-1 and NC-2 from ACM Manual Appendix NC, the assumed efficiencies of the motors are 91.7% and 87.5% for a 25 and 7.5 HP 4-pole motor respectively. Fan power demand in units of horsepower must first be calculated to determine whether the requirements apply:

a. 18 BHP / (0.97 x 0.917 x 0.96) = 21.1.0 HP

b. 5 BHP / (0.97 x 0.875 x 0.96) = 6.1 HP

Total power consumption, adjusted for efficiencies, is calculated as:

21.1.0 HP + 6.1 HP + 2 HP + 1 HP = 30.2 HP

Since this is larger than 25 HP, the limitations apply. W/cfm is calculated as:

30.2 HP x 746 W/cfm/20,000 cfm = 1.13 W/cfm

The system complies because power consumption is below 1.25 Wcfm. Note that, while this system has variable frequency drives, they are only required by the Standards for the 18 BHP fan since each other fan is less than 10 HP.

DRAFT

4.6.4 ECM Motors for Series Style VAV Boxes

§144(c)4

Series style fan powered boxes with motors ~~≤~~ 1 hp or less are required to have either electrically commuted motors (ECM) or shall have a minimum motor efficiency of 70 percent~~%~~ when rated in accordance with NEMA Standard MG 1-1998 Rev. 2 at full load rating conditions. ~~This is a new requirement in 2005.~~

4.6.5 Electric-Resistance Heating

§144(g), 149

The Standards strongly discourage the use of electric-resistance space heat. Electric-resistance space heat is not allowed in the prescriptive approach except where:

1. Site-recovered or site-solar energy provides at least 60% of the annual heating energy requirements; or
2. A heat pump is supplemented by an electric-resistance heating system, and the heating capacity of the heat pump is more than 75% of the design heating load at the design outdoor temperature, determined in accordance with the Standards; or
3. The total capacity of all electric-resistance heating systems serving the entire building is less than 10% of the total design output capacity of all heating equipment serving the entire building; or
4. The total capacity of all electric-resistance heating systems serving the building, excluding those that supplement a heat pump, is no more than 3 kW; or
5. An electric-resistance heating system serves an entire building that:
   ~~2.~~ I. Is not a high-rise residential or hotel/motel building; and
   II. Has a conditioned floor area no greater than 5,000 ft^2; and
   III. Has no mechanical cooling; and
   IV. Is in an area where natural gas is not currently available and an extension of a natural gas system is impractical, as determined by the natural gas utility.
6. In alterations where the existing mechanical systems use electric reheat (when adding variable air volume boxes) added capacity cannot exceed 20% of the existing installed electric capacity, under any one permit application.
7. In an addition where the existing variable air volume system with electric reheat is being expanded the added capacity cannot exceed 50% of the existing installed electric reheat capacity under any one permit.

DRAFT

The Standards in effect allow a small amount of electric-resistance heat to be used for local space heating or reheating (provided reheat is in accordance with these regulations).

Example 4-37~~42~~

Question

If a heat pump is used to condition a building having a design heating load of 100,000 Btu/h at 35°F, what are the sizing requirements for the compressor and heating coils?

Answer

The compressor must be sized to provide at least 75% of the heating load at the design heating conditions, or 75,000 Btu/h at 35°F. The Standards do not address the size of the resistance heating coils. Normally, they will be sized based on heating requirements during defrost.

4.6.6 Cooling Tower Flow Turndown

§ 144(h)3

The Standards require that open cooling towers with multiple condenser water pumps be designed so that all cells can be run in parallel with the larger of

The flow that's produced by the smallest pump, or

Thirty three percent of the design flow for the cell.

Note that in a large plant at low load operation you would typically run less than all of the cells at once. This is allowed in the standard.

Cooling towers are very efficient at unloading (the fan energy drops off as the cube of the airflow). It is always more efficient to run the water through as many cells as possible; 2 fans at ½ speed use less than 1/3 of the energy of 1 fan at full speed for the same load. Unfortunately there is a limitation with flow on towers, the flow must be sufficient to provide full coverage of the fill. If the nozzles don't fully wet the fill, air will go through the dry spots providing no cooling benefit and cause the water at the edge of the dry spot to flash evaporate depositing dissolved solids on the fill.

DRAFT

Luckily the cooling tower manufacturers do offer low-flow nozzles (and weirs on basin type towers) to provide better flow turndown. This typically only costs $100 to $150 per tower cell. As it can eliminate the need for a tower isolation control point this provides energy savings at a reduced first cost.

Example 4-38~~43~~

Question

If a large central plant has five equally sized chillers and five equally sized cooling tower cells do all of the cooling tower cells need to operate when only one chiller is on-line?

Answer

No you would probably only run three cells with one chiller. The cooling tower cells must be designed to run at 33% of their nominal design flow. With two to five chillers running you would run all of the cells of cooling tower. With only one chiller running you would run three cells. In each case you would need to keep the tower flow above the minimum that it was designed for.

~~vi.~~4.6.7 Centrifugal Fan Limitation

§ 144(h)4

Open cooling towers with a combined rated capacity of 900 gpm and greater at 95°F condenser water return, 85°F condenser water supply and 75°F outdoor wet-bulb temperature are prohibited to use centrifugal fans. The 95°F condenser water return, 85°F condenser water supply and 75°F outdoor wet-bulb temperature are test conditions for determining the rated flow capacity in gpm. Centrifugal fans use approximately twice the energy as propeller fans for the same duty. There are a couple of exceptions to this requirement.

1. Cooling towers that are ducted (inlet or discharge) or have an external sound trap that requires external static pressure capability.
2. Cooling towers that meet the energy efficiency requirement for propeller fan towers in §112, Standards Table 112-G.

Centrifugal fans may be used on closed circuit fluid coolers.

As with all prescriptive requirements centrifugal fan cooling towers may be used when complying with the performance method. The budget building will be modeled using propeller towers.

4.6.8 Air Cooled Chillers

§144(i)

New central cooling plants and cooling plant expansions that are greater than or equal to 300 tons in installed capacity will be limited on the use of air-cooled chillers. For plant expansions the 300 ton trigger applies only to the newly installed equipment (exception to §149 (b) 1 C). Above this size threshold, air cooled chillers can be provided for ~~≤~~ less than or equal 100 tons of capacity.

DRAFT

In the studies provided to support this requirement, air cooled chillers always provided a higher life-cycle cost than water cooled chillers even accounting for the water and chemical treatment costs.

There are a few exceptions to this requirement:

1. Where the designer demonstrates to the authority having jurisdiction that the water quality at the building site fails to meet manufacturer's specifications for the use of water-cooled equipment.
2. Plants serving chilled or ice thermal energy storage systems.
3. Air cooled chillers with minimum efficiencies approved by the Commission pursuant to §10-109 (d).

The first exception recognizes that some parts of the State have exceptionally high quantities of dissolved solids that could foul systems or cause excessive chemical treatment or blow down.

The second exception addresses the fact that air-cooled chillers can operate very efficiently at low ambient air temperatures. Since TES systems operate for long hours at night, these systems may be as efficient as a water-cooled plant. Note that the chiller must be provided with head pressure controls to achieve these savings.

The third exception was provided in the event that an exceptionally high efficiency air cooled chiller was developed. None of the high-efficiency air-cooled chillers currently evaluated are as efficient as a water-cooled systems using the lowest chiller efficiency allowed by §112.

4.6.9 Historic Buildings

Exception 1 to §100(a) states that qualified historic buildings, as defined in the California Historical Building Code (Title 24, Part 8 or California Building Code, Title 24, Part 2, Volume I, Chapter 34, Division II) are not covered by the Standards. However, non-historical components of the buildings, such as new or replacement mechanical, plumbing, and electrical (including lighting) equipment, additions and alterations to historic buildings, and new appliances in historic buildings may need to comply with Building Energy Efficiency Standards and Appliance Standards, as well as other codes. For more information about energy compliance requirements for Historic Buildings, see Section 1.7.1, Building Types Covered, in Chapter 1, the Overview of this manual.

DRAFT

4.7 Service Water Heating

All of the requirements for service hot water are mandatory measures, except for high-rise residential, hotels and motels which must comply with the low-rise residential standards (~~see Section 1.7.4).~~ §151(f)8. These requirements are described in the Residential Compliance Manual.

There are no acceptance requirements for water heating systems or equipment, however, high-rise residential, hotels and motel water heating systems must meet the distribution system eligibility criteria for that portion of the system that is applicable.

4.7.1 Service Water Systems

Efficiency and Control

§113(a)

Any service water heating equipment must have integral automatic temperature controls that allow the temperature to be adjusted from the lowest to the highest allowed temperature settings for the intended use as listed in Table 2, Chapter 49 of the ~~2003~~ ASHRAE Handbook, HVAC Applications Volume.

~~Water heating systems in high-rise residential buildings must meet the energy budget requirements of the Residential Standards.~~ Service water heaters installed in residential occupancies need not meet the temperature control requirement of §113(a)1.

Multiple Temperature Usage

§113(c)1

On systems that have a total capacity greater than 167,000 Btu/h, outlets requiring higher than service water temperatures as listed in the ~~2003~~ ASHRAE Handbook, HVAC Applications Volume shall have separate remote heaters, heat exchangers, or boosters to supply the outlet with the higher temperature. This requires the primary water heating system to supply water at the lowest temperature required by any of the demands served for service water heating. All other demands requiring higher temperatures should be served by separate systems, or by boosters that raise the temperature of the primary supply.

DRAFT

~~Circulating Systems~~ Controls for hot water distribution systems

§113(c)2

Service hot water systems with a circulating pump or with electrical heat trace~~Circulating service water systems~~ shall~~must~~ include a control capable of automatically turning off the ~~circulating pump~~system when hot water is not required. Such controls include automatic time switches, interlocks with HVAC time switches, occupancy sensors, and other controls that accomplish the

intended purpose. ~~Since residential occupancies have different supply requirements, a system serving a single dwelling unit does not have to meet the requirements of §113(c)2.~~

Public Lavatories

§113(c)3

Lavatories in public restrooms must have controls that limit the water supply temperature to 110°F. Where a service water heater supplies only restrooms, the heater thermostat may be set to no greater than 110°F to satisfy this requirement; otherwise controls such as automatic mixing valves must be installed.

Storage Tank Insulation

§113(c)4

Unfired water heater storage tanks and backup tanks for solar water heating systems must have:

1. External insulation with an installed R-value of at least R-12; or
2. Internal and external insulation with a combined R-value of at least R-16; or
3. The heat loss of the tank based on an 80 degree F water-air temperature difference shall be less than 6.5 Btu per hour per ft^2. This corresponds to an effective resistance of R-12.3.

Water Heating Recirculation Loops Serving Multiple Dwelling Units High-Rise Residential Hotel/Motel and Nonresidential Occupancies

§113(c)5

A water heating recirculation loop is a type of hot water distribution system that reduces the time needed to deliver hot water to fixtures that are distant from the water heater, boiler or other water heating equipment. The recirculation loop is comprised of a supply portion, connected to branches that serve multiple dwelling units, guest rooms, or fixtures and a return portion that completes the loop back to the water heating equipment. A water heating recirculation loop must meet the following requirements:

1. Air Release valve or vertical pump installation. An automatic air release valve shall be installed on the recirculation loop piping on the inlet side of the recirculation pump and no more than 4 feet from the pump. This valve shall be mounted on top of a vertical riser at least 12" in length and shall be accessible for replacement and repair. Alternatively the pump shall be installed on a vertical section of the return line.
2. Recirculation loop backflow prevention. A check valve or similar device shall be located between the recirculation pump and the water heating equipment to prevent water from flowing backwards though the recirculation loop.

DRAFT

3. Equipment for pump priming. A hose bibb shall be installed between the pump and the water heating equipment. An isolation valve shall be installed between the hose bibb and the water heating equipment. This hose bibb is used for bleeding air out of the pump after pump replacement.
4. Pump isolation valves. Isolation valves shall be installed on both sides of the pump. These valves may be part of the flange that attaches the pump to the pipe. One of the isolation valves may be the same isolation valve as in item C.
5. Cold water supply and recirculation loop connection to hot water storage tank. Storage water heaters and boilers shall be plumbed in accordance with the boiler manufacturer's specifications. The cold water piping and the recirculation loop piping shall not be connected to the hot water storage tank drain port.
6. Cold water supply backflow prevention. A check valve shall be installed on the cold water supply line between the hot water system and the next closest tee on the cold water supply line. The system shall comply with the expansion tank requirements as described in the California Plumbing Code Section 608.3

Service Water Heaters in State Buildings

§113(c)~~5~~6

Any newly constructed building constructed by the State shall derive its service water heating from a system that provides at least 60 percent~~%~~ of the energy needed from site solar energy or recovered energy. This requirement may be waived for buildings where the State Architect determines that such systems are economically or physically infeasible.

4.7.2 Pool and Spa Heating Systems

§115

Pool and spa heaters may not have continuously burning pilot lights.

§114

Pool and spa heating systems must be certified by the manufacturer and listed by the Energy Commission as having:

1. An efficiency that complies with the Appliance Efficiency Regulations; and
2. An on-off switch mounted on the outside of the heater in a readily accessible location that allows the heater to be shut-off without adjusting the thermostat setting; and
3. A permanent, easily readable, and weatherproof plate or card that gives instructions for the energy efficient operation of the pool or spa, and for the proper care of the pool or spa water when a cover is used; and

DRAFT

4. No electric resistance heating. The only exceptions are:

   ~~5.~~a. Listed packaged units with fully insulated enclosures and tight fitting covers that are insulated to at least R-6. Listed package units are defined in the National Electric Code and are typically sold as self-contained, UL Listed spas; or

   ~~6.~~b. Pools or spas deriving at least 60 percent~~%~~ of the annual heating energy from site solar energy or recovered energy.

If a pool or spa does not currently use solar heating collectors for heating of the water, piping must be installed to accommodate any future installation. Contractors can choose 3~~three~~ options to allow for the future addition of solar heating equipment:

- Leave at least 36 in. of pipe between the filter and heater to allow for the future addition of solar heating equipment.
- Plumb separate suction and return lines to the pool dedicated to future solar heating.
- Install built-up or built-in connections for future piping to solar water heating. An example of a built-in connection could be a capped off tee fitting between the filter and heater.

Pool and spa heating systems with gas or electric heaters for outdoor use must use a pool cover. The pool cover must be fitted and installed during the final inspection.

All ~~P~~pool ~~and spa equipment~~systems must be installed with ~~all of~~ the following:

~~2.Solar heater connection - At least 36 inches of pipe between the filter and the heater must be provided to allow for the future addition of solar heating equipment.~~

~~2.A cover must be provided for outdoor pools and outdoor spas, unless at least 60% of the annual heating energy is provided by site solar energy or recovered energy.~~

~~3.~~1. Directional inlets must be provided for all pools that adequately mix the pool water.

~~4.~~2. A time switch or similar control mechanism shall~~must~~ be provided for pools to control the operation of the circulation ~~pump~~control system, to allow the pump to be set or programmed to run in the off-peak demand period, and for the minimum time necessary to maintain the water in the condition required by applicable public health standards.

~~A time switch is not required where applicable public health standards require on-peak operation.~~

~~No pilot light.~~

DRAFT

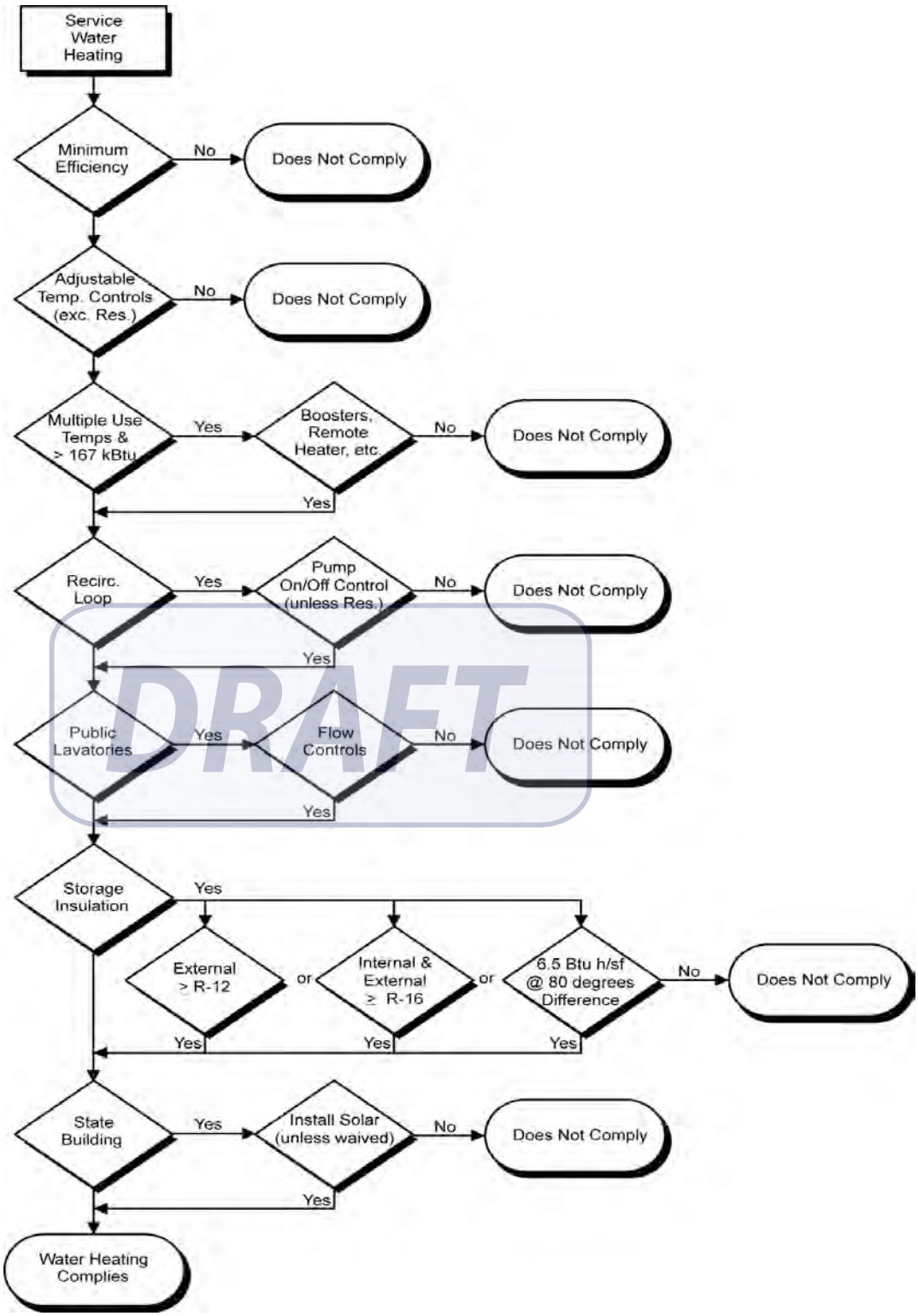

DRAFT

Figure 4-21 – Service Water Heating Flowchart

4.7.3 Service Water Heating Other Than High-rise Residential

§145

A service water-heating system is considered to comply with the prescriptive requirements when all mandatory requirements are met for occupancies other than high-rise residential. Buildings that have both occupancies other than high-rise residential and high-rise residential shall~~must~~ meet the service water heating requirements that apply to each occupancy.

~~4.1.1High-rise Residential Service Water Heating~~

~~Service water heating systems serving high-rise residential occupancies must comply with §151(f)8. These requirements are described in the Residential Compliance Manual.~~

~~4.1.1Acceptance Requirements~~

~~There are no acceptance requirements for service water heating systems~~.

4.8 Performance Approach

Under the performance approach, the energy use of the building is modeled using a computer program approved by the California Energy Commission. This section presents some basic details on the modeling of building mechanical systems. *Program users and those checking for enforcement should consult the most current version of the user's manuals and associated compliance supplements for specific instructions on the operation of the program*. All computer programs, however, are required to have the same basic modeling capabilities.

More information on how to model the mechanical systems and components are included in Chapter ~~7~~9, Performance Approach, and in the program vendor's compliance supplement.

4.8.1 Compliance ~~With~~ with a Computer Method

Each approved computer method automatically generates an energy budget by calculating the annual time dependent valuation (TDV) energy use of the standard design, a version of the proposed building incorporating all the prescriptive features.

A building complies with the Standards if the predicted TDV energy use of the proposed design is the same or less than the annual energy budget of the standard design. The energy budget includes a space-conditioning budget, lighting budget and water-heating budget. This allows for tradeoffs between building envelope components, mechanical systems, lighting systems and water heating systems, provided that the total energy budget is not exceeded. For instance, if the designer installs an HVAC system that is more efficient than the

mandatory efficiency requirements of ~~Section~~§-112 of the Standards and all the other features of the building comply, the option exists to~~is would~~ allow for a larger ~~allowed~~ lighting budget.

TDV energy use defines the energy use of a building by converting the calculated energy consumption into TDV energy. Reference Joint Appendix ~~III~~ 3 describes the derivation of the TDV energy multipliers. TDV energy multipliers adjust the calculated energy consumption of a building to account for the time dependent energy value of different fuels and inefficiencies in generating and distributing electricity.

The budget for space conditioning of the proposed building design varies according to the following specific characteristics:

~~A.~~Orientation.

~~B.~~Space-conditioning system type.

~~C.~~Occupancy type.

~~D.~~Climate zone.

Assumptions used by the computer methods in generating the energy budget are explained in the Alternative Calculation Methods Approval Manual and are based on features required for prescriptive compliance.

If any of the following equipment or systems are installed the acceptance tests must be conducted.

~~E.~~Variable air volume systems.

~~F.~~Constant volume systems.

~~G.~~Package systems.

~~H.~~Air distribution systems.

~~I.~~Economizers.

~~J.~~Demand control ventilation systems.

~~K.~~Variable frequency drive fan systems.

~~L.~~Hydronic control systems.

~~M.~~Hydronic pump isolation controls and devices.

~~N.~~Supply water reset controls.

~~O.~~Water loop heat pump control.

~~P.~~Variable frequency drive pump systems.

~~Q.~~System programming.

~~R.~~Time clocks.

Distributed energy storage DX AC systems

Thermal energy storage systems

DRAFT

A final occupancy permit can not be granted from the Building Department until all the tests have been completed and pass. For more detail see Chapter ~~8~~10, Acceptance Requirements.

4.8.2 Modeling Mechanical System Components

All alternative calculation methods (state-approved energy compliance software) have the capability to model various types of HVAC systems. In central systems, these modeling features affect the system loads seen by the plant. This is done by calculating the interactions between envelope, mechanical and electrical systems in the building and summarizing the energy required by the mechanical system to maintain space conditions.

At a minimum, compliance software is able to model direct expansion (DX) cooling systems and water chillers with either centrifugal or reciprocating compressors. For heating, compliance software is able to model forced air furnaces (electric or fossil fuel), boilers, and electric heat pumps.

In order to establish an energy budget for the building, the standard design HVAC system is fixed at one of five system types, depending upon building type, control method (single or multiple zone), heating source and cooling source: (1) a packaged single zone system, (2) a packaged single zone heat pump, (3) packaged VAV system with central gas boiler and hydronic reheat, (4) a built-up VAV system with central gas boiler and central electric chiller, or (5) a built-up single zone system consisting of a central gas boiler and electric chiller serving individual units with hydronic heating and cooling coils. The equipment efficiency of the standard design system meets minimum requirements of ~~Section~~ §112, and the system controls (i.e. economizer, fan volume control, supply temperature reset) meet prescriptive requirements. The proposed HVAC design is modeled as it is shown on the construction documents for the building. Compliance software may provide the capability to model additional system types, such as dual duct systems, evaporative cooling systems or thermal energy storage systems. For additional details on HVAC system modeling, refer to Chapter 2 of the Nonresidential ACM Approval Manual.

The performance approach allows for compliance credits for systems that exceed prescriptive requirements. For instance, for VAV systems (type 3 and 4), if the proposed design fan power is less than 0.80 W/cfm, the standard design fan power is fixed at 0.80 W/cfm. Conversely, the performance approach penalizes systems with a high fan power: if the proposed design fan power of a VAV system exceeds 1.25 W/cfm, the standard design fan power is fixed at 1.25 W/cfm.

For the 2008 Standards a new compliance credit is provided for packaged equipment that employ fault detection and diagnostics (FDD) systems. For packaged equipment, the equipment efficiency (EER) is degraded by 10 percent~~%~~ by default, if FDD is not installed. If FDD is installed and meets acceptance requirements of Nonresidential Appendix NA7, equipment performance is only degraded by 5 percent~~%~~.

A compliance credit is also offered for air handling units and zone terminal units that use FDD controls. By default, air handling units are modeled assuming imperfect economizer operation by setting the maximum outdoor air fraction to

0.9. If a FDD system is installed and meets acceptance requirements in Nonresidential Appendix NA7, the economizer is modeled with a maximum outdoor air fraction of 1. Controls for zone terminal units are modeled with imperfect operation by using a minimum damper position equal to 1.1 times the value provided on the plans. Systems with tested FDD systems on zone terminal units receive a compliance credit by modeling the minimum damper position equal to the value provided on the plans. See Chapter 10 for details on acceptance requirements for FDD systems.

For a complete description of how to model mechanical system components, refer to the compliance supplement for the approved computer program being used to demonstrate compliance.

4.9 _Additions and Alterations

4.9.1 Overview

This section addresses how the standards apply to mechanical systems for additions and alterations to existing buildings. Application of the standards to existing buildings is often more difficult than for new buildings because of the wide variety of conditions that can be experienced in the field. In understanding the requirements, two general principles apply:

- Existing systems or equipment are not required to meet the standards.
- New systems and equipment are required to meet both the mandatory measures and the prescriptive requirements.

When heating, cooling or service water heating are provided for an alteration or addition by expanding an existing system, in general, that existing system need not comply with the mandatory measures or prescriptive ~~compliance~~ requirements. However, any altered component must meet all applicable mandatory measures and prescriptive ~~space-conditioning ducts must meet the following~~.

DRAFT

Relocation of Equipment

When existing heating, cooling, or service water heating systems or components are moved within a building, the existing systems or components need not comply with mandatory measures nor with the prescriptive or performance compliance requirements.

Performance approach may also be used to demonstrate compliance for alterations. Refer to Chapter 7, Performance Approach, for more details.

4.9.2 Mandatory Measures – Additions and Alteration

New mechanical equipment or systems in ~~All~~ additions and/or alterations must comply with the ~~following~~ mandatory measures as listed below. Additional

information on these requirements is provided in earlier sections of this Chapter. ÷

Mandatory Measure	Application to Additions and Alterations
~~§110 – Systems and Equipment – General~~	
§111 – Mandatory Requirements for Appliances Regulated by the Appliance Efficiency Regulations. (see Section 4.2)	The California Appliance Efficiency Regulations apply to small to medium sized heating equipment, cooling equipment and water heaters. These requirements are enforced for all equipment sold in California and therefore applies to all equipment used in additions or alterations.
§112 – Mandatory Requirements for Space-Conditioning Equipment (see Section 4.2)	This section sets minimum efficiency requirements for equipment not covered by §111. Any equipment used in additions or alterations must meet these efficiency requirements.
§113 – Mandatory Requirements for Service Water-Heating Systems and Equipment (see Section 4.2)	This section sets minimum efficiency and control requirements for water heating equipment. It also sets requirements for recirculating hot water distribution systems. All new equipment installed in additions and/or alterations shall meet the requirements. The recirculation loop requirements of §113(c)5 apply when water heating equipment and/or plumbing is changed.
§114 – Mandatory Requirements for Pool and Spa Heating Systems and Equipment (see Section 4.7)	The pool requirements of §114 do not apply for maintenance or repairs of existing pool heating or filtration systems.
§115 – Natural Gas Central Furnaces, Cooking Equipment, and Pool and Spa Heaters: Pilot Lights Prohibited (see Section 4.2)	Any new gas appliances installed in additions or alterations shall not have a standing pilot light, unless unless one of the exceptions in §115 is satisified.

DRAFT

Mandatory Measure	Application to Additions and Alterations
§121 – Requirements for Ventilation (see Section 4.3)	Systems dedicated to additions or alterations shall meet the outside air ventilation requirements, and in this case, no modifications are needed for the existing system, even if it does not comply. When existing systems are extending to serve additions or when occupancy changes in an exising building (such as the conversion of office space to a large conference room), the outside air settings at the existing air handler may need to be modified and in some cases, new controls may be necessary.

DRAFT

Mandatory Measure	Application to Additions and Alterations
§122 – Required Controls for Space-Conditioning Systems (see Section 4.5)	§122(a) requires a thermostat for any new zones in additions or new zones created in an alteration. §122(b) requires that new thermostats required §122(a) meet the minimum requirements . §122(c) applies to hotel/motel guest rooms only when the system level controls are replaced; replacement of individual thermostats are considered a repair. However, §122(c) applies to all new thermostats in high rise residential, including replacements. §122(d) requires that new heat pumps used in either alterations or additions have controls to limit the use of electric resistance heat, per §112. This applies to any new heat pump installed in conjunction with an addition and/or alteration. §122(e) requires that new systems in alterations and additions have scheduling and setback controls. §122(f) requires that outside air dampers automatically close when the fan is not operating. This applies when a new system or air handling unit is replaced in conjunction with an addition or alteration. §122(g) requires that areas served by large systems be divided into isolation areas so that heating, cooling and/or the supply of air can be provided to just the isolation areas that need it and other isolation areas can be shut off. This applies to additions larger than 25,000 ft² and to the replacement of existing systems when the total area served is greater than 25,000 ft². §122(h) requires that direct digital controls (DDC) that operate at the zone level be programmed to enable non-critical loads to be shed during electricity emergencies. This requirement applies to additions and/or alterations anytime DDC are installed that operate at the zone level. b

DRAFT

Mandatory Measure	Application to Additions and Alterations
§123 – Requirements for Pipe Insulation (see Section 4.4)	The pipe insulation requirements apply to any new piping installed in additions or alterations.
§124 – Requirements for Air Distribution System Ducts and Plenums	The duct insulation, construction and sealing requirements apply to any new ductwork installed in additions or alterations.
§125 – Required Nonresidential Mechanical System Acceptance	Acceptance requirements are triggered for systems or equipment installed in additions and alterations they same way they are for new buildings or systems.

~~For more detailed information about the mandatory measures, refer to following sections of this chapter:4.1.2 Compliance Approaches~~

~~4.2 Equipment Requirements~~

~~4.3 Ventilation Requirements~~

~~4.4 Pipe and Duct Distribution Systems~~

~~4.5 HVAC System Control Requirements~~

~~4.7 Service Water Heating~~

4.9.3 Prescriptive Requirements – Additions

Summary

All new additions must comply with the following prescriptive requirements:

§144 – Prescriptive Requirements for Space Conditioning Systems

§145 – Prescriptive Requirements for Service Water-Heating Systems

For more detailed information about the prescriptive requirements, refer to following sections of this chapter

4.1.2 Compliance Approaches

4.2 Equipment Requirements

4.5 HVAC System Control Requirements

4.6 HVAC System Requirements

4.6.5 Electric-Resistance Heating

DRAFT

Performance Approach

The p~~P~~erformance approach may also be used to demonstrate compliance for new additions. ~~Refer to Chapter 7, Performance Approach, for more details.~~

When using the performance approach for additions or alterations, §149 (b) 2 B defines the characteristics of the standard design building.

- The building envelope of the building or permitted space is unchanged, except for roof alterations subject to ~~Section~~ §149 (b) 1 B (see Section 3.9 of this Manual).
- Mechanical system alterations met the requirements of ~~Section~~ §149 (b) 1.
- Lighting system alterations met the requirements of ~~Section~~ §149 (b) 1.
- Service water-heating system alterations met the requirements of ~~Section~~ §149 (b) 1.

Refer to Chapter 9, Performance Approach, for more details.

Acceptance Tests

Acceptance tests must be conducted on the following equipment or systems when installed in new additions:

Variable air volume systems.

Constant volume systems.

Package systems.

Air distribution systems.

Economizers.

Demand control ventilation systems.

Variable frequency drive fan systems.

Hydronic control systems.

Hydronic pump isolation controls and devices.

Supply water reset controls.

Water loop heat pump control.

Variable frequency drive pump systems.

System programming.

Time clocks.

For more detail, see Chapter ~~8~~10, Acceptance Requirements.

DRAFT

4.9.4 Prescriptive Requirements – Alterations

New or Replacement Equipment

New space conditioning systems or components other than space conditioning ducts must meet applicable prescriptive requirements of ~~Section~~ §144 of the Standards.

Minor equipment maintenance such as replacement of filters or belts does not trigger the prescriptive requirements. Equipment replacement such as the installation of a new air handler or cooling tower would be subject to the

prescriptive requirements of ~~Section~~ §144. Another example is the replacement of a fan motor on a VAV system: if the motor is greater than 10 horsepower, the replacement motor must incorporate a variable speed drive, according to ~~Section~~ §144(c) if the existing fan is not a vane-axial fan with variable pitch blades. Similarly if an existing VAV system is expanded to serve additional zones, the new VAV boxes are subject to zone controls of ~~Section~~ §144(d). Details on prescriptive requirements may be found in other sections of this chapter.

An exception is provided for chilled water plant expansions of no greater than 300 tons. Such expansions are exempt from the requirements of ~~Section~~ §144(i). Replacements of electric resistance space heaters for high rise residential apartments are also exempt from ~~Section~~ §144 requirements. Replacements of electric heat or electric resistance space heaters are allowed where natural gas is not available.

Air Distribution Ducts

When new or replacement space-conditioning ducts are installed to serve an existing building, the new ducts shall meet the requirements of §124 (insulation levels, sealing materials and methods etc.). Details on duct requirements of §124 can be found in section 4.4 of this manual.

If the ducts are part of a single zone constant volume system serving less than 5,000 ft^2 and more than 25 percent~~%~~ of the ducts are outdoors or in unconditioned area including attic spaces and above insulated ceilings [the criteria of §144 (k) 1, 2, and 3], the duct system shall be sealed and tested for air leakage by the contractor. In most nonresidential buildings this requirement will not apply because the roof is insulated so that almost all of the duct length is running through directly or indirectly conditioned space.

If the ducts are in unconditioned space and have to be sealed, they must also be tested to leak no greater than 6 percent~~%~~ if the entire duct system is new or less than 15 percent~~%~~ if the duct system is added to a pre-existing duct system. The description of the test method can be found in Section ~~4.3.8.2~~2.3.8 of Reference Nonresidential Appendix ~~NG~~ NA2~~of the Nonresidential ACM Manual.~~ The air distribution acceptance test associated with this can be found in Reference Appendix NA2~~7~~~~NJ 5.1 of the Nonresidential ACM Manual~~. This and all acceptance tests are described in Chapter ~~8~~ 10 of this manual.

If the new ducts form an entirely new duct system directly connected to ~~the~~ an existing or new air handler, the measured duct leakage shall be less than 6 percent~~%~~ of fan flow; or

If the new ducts are an extension of an existing duct system, the combined new and existing duct system shall meet one of the following requirements:

- The measured duct leakage shall be less than 15 percent~~%~~ of fan flow; or
- The duct leakage shall be reduced by more than 60 percent~~%~~ relative to the leakage prior to the equipment having been replaced and a visual inspection shall demonstrate that all accessible leaks have been sealed; or

DRAFT

- If it is not possible to meet the duct sealing requirements of Subsections a. or b., all accessible leaks shall be sealed and verified through a visual inspection by a certified HERS rater.

EXCEPTION to ~~Section~~ §149 (b) 1 D ii: Existing duct systems that are extended, which are constructed, insulated or sealed with asbestos.

Once the ducts have been sealed and tested to leak less than the above amounts, a HERS rater will be contacted by the contractor to validate the accuracy of the duct sealing measurement on a sample of the systems repaired as described in ~~the Nonresidential ACM Manual~~Reference Nonresidential Appendix NA1.

Equipment Alterations

Similar requirements apply to ducts upon replacement of small (serving less than 5,000 ~~sf~~ft^2) constant volume HVAC units or their components *(including replacement of the air handler, outdoor condensing unit of a split system air conditioner or heat pump, cooling or heating coil, or the furnace heat exchanger).* Again the duct sealing requirements are for those systems where over 25 percent~~%~~ of the duct area is outdoors or in unconditioned areas including attic spaces and above insulated ceilings.

One can avoid sealing the ducts by insulating the roof and sealing the attic vents as part of a larger remodel, thereby creating a conditioned space within which the ducts are located, and no longer meets the criteria of §144 k. Another alternative to duct sealing is to install a high EER air conditioner that will save as much energy as the duct system is losing though leaks. This trade-off can be calculated using the performance software or by using pre-calculated equipment efficiencies deemed comparable to duct sealing in Table 4-5 in Section 4.4.2.

When a space conditioning system is altered by the installation or replacement of space conditioning equipment (including replacement of the air handler, outdoor condensing unit of a split system air conditioner or heat pump, cooling or heating coil, or the furnace heat exchanger), the duct system that is connected to the new or replaced space conditioning equipment, if the duct system meets the criteria of ~~Section~~ §144 (k) 1, 2., and 3, shall be sealed, as confirmed through field verification and diagnostic testing in accordance with procedures for duct sealing of existing duct systems as specified in the Reference Nonresidential ~~ACM Manual~~Appendix NA1, to one of the requirements of ~~Section~~ §149 (b) 1 D; and the system shall include a setback thermostat that meets requirements of ~~Section~~ §112(c).

EXCEPTION 1 to ~~Section~~ §149 (b) 1. E: Buildings altered so that the duct system no longer meets the criteria of ~~Section~~ §144 (k) 1, 2, and 3.

Ducts would no longer have to be sealed if the roof deck was insulated and attic ventilation openings sealed.

EXCEPTION 2 to ~~Section~~ §149 (b) 1 E: Duct systems that are documented to have been previously sealed as confirmed through field verification and diagnostic testing in accordance with procedures in ~~the~~ Reference Appendix NA2 ~~Nonresidential ACM Manual~~.

DRAFT

EXCEPTION 3 to ~~Section~~ §149 (b) 1 E: Existing duct systems constructed, insulated or sealed with asbestos.

Performance Approach

~~There are new requirements in 2005 w~~When using the performance approach for ~~compliance~~additions or alterations, ~~analyzing the whole building and making improvements in the existing building. Changes to the existing building are alterations and must meet the requirements of §149(b)2.B.~~

§149 (b) 2 B defines the characteristics of the standard design building.

- ~~requires that the energy efficiency of either the building or permitted space shall be improved so that the building or permitted space meets the energy budget in Section 141 that would apply to the~~ The building envelope of the building or permitted space~~, if the building envelope was~~ is unchanged, except for roof alterations subject to ~~Section~~ §149 (b) 1 B (see Section 3.9 of this Manual).~~, the roof alteration met the requirements of 149 (b) 1; and for~~
- ~~any mechanical~~ Mechanical system alterations ~~subject to Section 149(b) 1 C, D, E, the mechanical system alterations~~ met the requirements of ~~Section~~ §149 (b) 1. ~~, and for any~~
- Lighting ~~lighting~~ system alterations ~~subject to Section 149 (b) 1 F, the lighting system alteration~~ met the requirements of ~~Section~~ §149 (b) 1. ~~; and for any~~
- ~~service~~ Service water-heating system alterations ~~subject to Section 149 (b) 1 K, the service water heating system~~ met the requirements of ~~Section~~ §149 (b) 1.

DRAFT

~~When existing heating, cooling, or service water heating systems or components are moved within a building, the existing systems or components need not comply with mandatory measures nor with the prescriptive or performance compliance requirements.~~

~~Performance approach may also be used to demonstrate compliance for alterations. Refer to Chapter 7, Performance Approach, for more details.~~

Acceptance Tests

Acceptance tests must be conducted on the following equipment or systems when installed in new additions:

- Variable air volume systems.
- Constant volume systems.
- Package systems.
- Air distribution systems.
- Economizers.
- Demand control ventilation systems.
- Variable frequency drive fan systems.
- Hydronic control systems.

- Hydronic pump isolation controls and devices.
- Supply water reset controls.
- Water loop heat pump control.
- Variable frequency drive pump systems.
- System programming.
- Thermal energy storage systems.
- Time clocks.

For more detail, see Chapter ~~8~~10, Acceptance Requirements.

Example 4-44

Question

A maintenance contractor comes twice a year to change the filters and check out the rooftop packaged equipment that serves our office. Do the energy efficiency standards apply to this type of work?

Answer

In general, the standards do not apply to general maintenance such as replacing filters, belts or other components, however if the rooftop unit wears out and needs to be replaced, then the new unit would have to meet the equipment efficiency requirements of §112 as well as the mandatory requirements of §121-124 and the prescriptive requirements of §144.

Example 4-45

Question

Our building is being renovated and the old heating system is being entirely removed and replaced with a new system that provides both heating and cooling. How do the energy efficiency standards apply?

Answer

All of the requirements of the standard apply in the same way they would if the system were in a new building.

Example 4-46

Question

A 10,000 ft² addition is being added to a 25,000 ft² building. The addition has its own rooftop HVAC system. The system serving the existing building is not being modified. How do the standards apply?

Answer

The addition is treated as a separate building and all the requirements of the standard apply to the addition. None of the requirements apply to the existing system or existing building since it is not being modified.

Example 4-47

Question

DRAFT

A 3,000 ft² addition is being added to a 50,000 ft² office. The existing packaged variable air volume (PVAV) system has unused capacity and will be used to serve the addition as well as the existing building. This system has direct digital controls at the zone level and an air side economizer. Ductwork will be extended from an existing trunk line and two additional VAV boxes will be installed with hot water reheat. Piping for reheat will be extended from existing branch lines. How do the standards apply?

Answer

The general rule is that the standards apply just to new construction and not to existing systems that are not being modified. In this case, the standards would not apply to the existing PVAV. However, the ductwork serving the addition would have to be sealed and insulated according to the requirements of §124 and the hot water piping would have to be insulated according to the requirements of §123.

Example 4-48

Question

In the previous example (3,000 ft² addition is added to a 50,000 ft² office.), how do the outside air ventilation requirements of §121 apply?

Answer

The outside air ventilation rates specified in §121 apply at the air handler. When existing air handlers are extended to serve additional space, it is necessary to reconfigure the air handler to assure that the outside air requirements of §121 are satisfied for all the spaces served. In addition, the acceptance requirements for outside air ventilation are also triggered (see Chapter 10). It would be necessary to evaluate the occupancies both in the addition and the existing building to determine the minimum outside air needed to meet the requirements of §121. The existing air handler would have to be controlled to assure that the minimum outside air is delivered to the spaces served by the air handler for all positions of the VAV boxes. (See Section 4.3 of this Manual for details on how this is achieved. Additional controls may need to be installed at the air handler to meet this requirement.)

DRAFT

Example 4-49

Question

In the previous example, the 3,000 ft² addition contains a large 400 ft² conference room. What additional requirements are triggered in this instance?

Answer

In this case, the demand control requirements of §144(c) would apply to the conference room, since it has an occupant density greater than 25 persons per 1,000 ft² and the PVAV system serving the building has an air side economizer and direct digital controls (DDC) at the zone level. If the existing system did not have an outside air economizer or if it did not have DDC controls at the zone level, then the demand control requirements would not apply. A separate sensor would need to be provided in the conference room to meet this requirement.

Example 4-50

Question

An existing building has floor-by-floor VAV systems with no air side economizers. The VAV boxes also have electric reheat. Outside air is ducted to the air handlers on each floor which is adequate to meet the ventilation requirements of §121, but not large enough to bring in 100% outside air

which would be needed for economizer operation. A tenant space encompassing the whole floor is being renovated and new ductwork and new VAV boxes are being installed. Does the economizer requirement of §144(e) apply? Does the restriction on electric resistance heat of §144(g) apply?

Answer

Since the air handler is not being replaced, the economizer requirement of §144(e) does not apply. If in the future the air handler were to be replaced, the economizer requirement would need to be satisfied; however for systems such as this a water side economizer is often installed instead of an air side economizer. The electric resistance restriction of §144(g) does however apply, unless the Exception 2 to Section 149(a) applies. This exception permits electric resistance to be used for the additional VAV boxes as long as the total capacity of the electric resistance system does not increase by more than 150%.

Example 4-51

Question

In the previous example, the building owner has decided to replace the air handler on the floor where the tenant space is being renovated because the new tenant has electronic equipment that creates more heat than can be removed by the existing system. In this case, does the economizer requirement of §144(e) apply?

Answer

In this case, the economizer requirement does apply. The designer would have a choice of using an air-side economizer or a water-side economizer. The air side economizer option would likely require additional or new ductwork to bring in the necessary volume of outside air. The feasibility of a water economizer will depend on the configuration of the building. Often a cooling tower is on the roof and chillers are in the basement with chilled water and condenser water lines running in a common shaft. In this case, it may be possible to tap into the condenser water lines and install a water economizer, however, pressure controls would need to be installed at the take offs at each floor and at the chiller.

DRAFT

Example 4-52

Question

400 tons of capacity is being added to an existing 800 ton chilled water plant. The existing plant is air cooled. Can the new chillers also be air cooled?

Answer

No. The requirements of §144(i) apply in this case and a maximum of 100 tons of added capacity can be air cooled. The remainder has to be water cooled.

Example 4-53

Question

In the previous example, suppose that only 250 tons of capacity is being added. Can the new chillers be air cooled in this case?

Answer

Yes. Exception 1 to §149(b)1C applies in this case. This exception limits the requirements of §144(i) to expansions greater than 300 tons.

4.10 Glossary/Reference

Terms used in this chapter are defined in Joint Appendix I. Definitions that appear below either expand on the definition in Joint Appendix I or are terms that are not included in that appendix, but are included here as an aid in understanding the sections that follow.

4.10.1 Definitions of Efficiency

Sections 111 and 112 mandate minimum efficiency requirements that regulated appliances and other equipment must meet. The following describes the various measurements of efficiency used in the Standards.

The purpose of space-conditioning and water-heating equipment is to convert energy from one form to another, and to regulate the flow of that energy. Efficiency is a measure of how effectively the energy is converted or regulated. It is expressed as the ratio:

Equation 4-1

$$Efficiency = \frac{Output}{Input}$$

The units of measure in which the input and output energy are expressed may be either the same or different, and vary according to the type of equipment. The Standards use several different measures of efficiency.

Combustion Efficiency is defined in the Appliance Efficiency Standards as follows:

> *"Combustion efficiency of a space heater" means a measure of the percentage of heat from the combustion of gas or oil that is transferred to the space being heated or lost as jacket loss, as determined using the applicable test method in Section 1604(e).*

and;

"Boiler" means a space heater that is a self-contained appliance for supplying steam or hot water primarily intended for space-heating. "Boiler" does not include hot water supply boilers.

Where boilers used for space heating are considered to be a form of space heater.

Thermal efficiency is used as the efficiency measurement for gas and oil boilers with rated input greater than or equal to 300,000 Btu/hr. It is a measure of the percent of energy transfer from the fuel to the heat exchanger (HX). Input and output energy are expressed in the same units so that the result has non-dimensional units:

DRAFT

Equation 4-2

$$\%\,\text{Combustion Eff} = \frac{(\text{Energy to HX})\ \text{x}\ 100}{\text{Total Fuel Energy Input}}$$

Note: combustion efficiency does not include losses from the boiler jacket. It is strictly a measure of the energy transferred from the products of combustion.

Fan Power Index is the hourly power consumption of the fan system per unit of air moved per minute (W/cfm).

Thermal Efficiency is defined in the Appliance Efficiency Regulations as a measure of the percentage of heat from the combustion of gas, which is transferred to the space or water being heated as measured under test conditions specified. The definitions from the Appliance Efficiency Regulations are:

"Thermal efficiency" of a space heater means a measure of the percentage of heat from the combustion of gas or oil that is transferred to the space being heated, or in the case of a boiler, to the hot water or steam, as determined using the applicable test methods in Section 1604(e).

"Thermal efficiency" of a water heater means a measure of the percentage of heat from the combustion of gas or oil that is transferred to the water, as determined using the applicable test method in Section 1604(f).

"Thermal efficiency" of a pool heater means a measure of the percentage of heat from the input that is transferred to the water, as determined using the applicable test method in Section 1604(g).

Equation 4-3

$$\%\ \textit{Thermal Eff} = \frac{(\textit{Energy Transferred to Medium})}{(\textit{Total Fuel Input})}$$

DRAFT

4.10.2 Definitions of Spaces and Systems

The concepts of spaces, zones, and space-conditioning systems are discussed in this subsection.

Fan System is a fan or collection of fans that are used in the scope of the Prescriptive requirement for fan-power limitations [§144(c)]. Section 144(c) defines fan-systems as all fans in the system that are required to operate at design conditions in order to supply air from the heating or cooling source to the conditioned space, and to return it back to the source or to exhaust it to the outdoors. For cooling systems this includes supply fans, return fans, relief fans, fan coils, series-style fan powered boxes, parallel-style fan powered boxes and exhaust fans. For systems without cooling this includes supply fans, return fans, relief fans, fan coils, series-style fan powered boxes, parallel-style fan powered boxes and exhaust fans. Parallel-style fan-powered boxes are often not included in a terminal unit where there is no need for heating as the fans are only needed for heating.

Space is not formally defined in the Standards, but is considered to be an area that is physically separated from other areas by walls or other barriers. From a mechanical perspective, the barriers act to inhibit the free exchange of air with other spaces. The term "space" may be used interchangeably with "room."

Zone, Space Conditioning is a space or group of spaces within a building with sufficiently similar comfort conditioning requirements so that comfort conditions, as specified in Section 144(b)3 or Section 150(h), as applicable, can be maintained throughout the zone by a single controlling device. It is the designer's responsibility to determine the zoning; in most cases each building exposure will consist of at least one zone. Interior spaces that are not affected by outside weather conditions usually can be treated as a single zone.

A building will generally have more than one zone. For example, a facility having 10 spaces with similar conditioning that are heated and cooled by a single space-conditioning unit using one thermostat is one zone. However, if a second thermostat and control damper, or an additional mechanical system, is added to separately control the temperature within any of the 10 spaces, then the building has two zones.

The term **Space-Conditioning System** is used to define the scope of Standards requirements. It is a catch-all term for mechanical equipment and distribution systems that *provide either collectively or individually- heating, ventilating, or cooling within or associated with conditioned spaces in a building.* HVAC equipment is considered part of a space-conditioning system if it does not exclusively serve a process within the building. Space conditioning systems include general and toilet exhaust systems.

Space-conditioning systems may encompass a single HVAC unit and distribution system (such as a package HVAC unit) or include equipment that services multiple HVAC units (such as a central outdoor air supply system, chilled water plant equipment or central hot water system).

DRAFT

4.10.3 Types of Air

Exhaust Air is air being removed from any space or piece of equipment and conveyed directly to the atmosphere by means of openings or ducts. The exhaust may serve specific areas, such as toilet rooms, or may be for a general building relief, such as an economizer.

Make-up Air is air provided to replace air being exhausted.

Mixed Air is a combination of supply air from multiple air streams. The term *mixed air* is used in the Standards in an exception to the prescriptive requirement for space conditioning zone controls [§144(d)]. In this manual the term mixed air is also used to describe a combination of outdoor and return air in the mixing plenum of an air handling unit.

Outdoor Air *is air taken from outdoors and not previously circulated in the building.* For the purposes of ventilation, outdoor air is used to flush out pollutants produced by the building materials, occupants and processes. To ensure that all spaces are adequately ventilated with outdoor air, the Standards require that each space be adequately ventilated (see 0~~Error! Reference source not found.~~).

Return Air is air from the conditioned area that is returned to the conditioning equipment either for reconditioning or exhaust. The air may return to the system through a series of ducts, or through plenums and airshafts.

Supply Air is air being conveyed to a conditioned area through ducts or plenums from a space-conditioning system. Depending on space requirements, the supply may be heated, cooled, or neutral.

Transfer Air is air that is transferred directly from either one space to another or from a return plenum to a space. Transfer air is a way of meeting the ventilation requirements at the space level and is an acceptable method of ventilation per §121. It works by transferring air with a low level of pollutants (from an over ventilated space) to a space with a higher level of pollutants (see Section 0~~Error! Reference source not found.~~).

4.10.4 Air Delivery Systems

Space-conditioning systems can be grouped according to how the airflow is regulated.

Constant Volume System is a space-conditioning system that delivers a fixed amount of air to each space. The volume of air is set during the system commissioning.

Variable Air Volume (VAV) System *is a space conditioning system that maintains comfort levels by varying the volume of conditioned air to the zones served.* This system delivers conditioned air to one or more zones. There are two styles of VAV systems, single-duct VAV where mechanically cooled air is typically supplied and reheated through a duct mounted coil, and dual-duct VAV systems where heated and cooled streams of air are blended at the zone level. In single-duct VAV systems the duct serving each zone is provided with a motorized damper that is modulated by a signal from the zone thermostat. The thermostat also controls the reheat coil. In dual-duct VAV systems the ducts serving each zone are provided with motorized dampers that blend the supply air based on a signal from the zone thermostat.

DRAFT

Pressure Dependent VAV Box has an air damper whose position is controlled directly by the zone thermostat. The actual airflow at any given damper position is a function of the air static pressure within the duct. Because airflow is not measured, this type of box cannot precisely control the airflow at any given moment: a pressure dependent box will vary in output as other boxes on the system modulate to control their zones.

Pressure Independent VAV Box has an air damper whose position is controlled on the basis of measured airflow. The setpoint of the airflow controller is, in turn, reset by a zone thermostat. A maximum and minimum airflow is set in the controller, and the box modulates between the two according to room temperature.

4.10.5 Return Plenums

Return Air Plenum is an plenum is an air compartment or chamber including uninhabited crawl spaces, areas above a ceiling or below a floor, including air spaces below raised floors of computer/data processing centers, or attic spaces, to which one or more ducts are connected and which forms part of either the supply air, return air or exhaust air system, other than the occupied space being conditioned. The return air temperature is usually within a few degrees of space temperature.

4.10.6 Zone Reheat, Recool and Air Mixing

When a space-conditioning system supplies air to one or more zones, different zones may be at different temperatures because of varying loads. Temperature regulation is normally accomplished by varying the conditioned air supply (variable volume), by varying the temperature of the air delivered, or by a combination of supply and temperature control. With multiple zone systems, the ventilation requirements or damper control limitations may cause the cold air supply to be higher than the zone load, this air is tempered through reheat or mixing with warmer supply air to satisfy the actual zone load. §144(c) limits the amount of energy used to simultaneously heat and cool the same zone as a basis of zone temperature control

[**Zone**] **Reheat** *is the heating of air that has been previously cooled by cooling equipment or systems or an economizer.* A heating device, usually a hot water coil, is placed in the zone supply duct and is controlled via a zone thermostat. Electric reheat is sometimes used, but is severely restricted by the Standards.

[**Zone**] **Recool** is the cooling of air that has been previously heated by space conditioning equipment or systems serving the same building. A chilled water or refrigerant coil is usually placed in the zone supply duct and is controlled via a zone thermostat. Re-cooling is less common than reheating.

Zone Air Mixing occurs when more than one stream of conditioned air is combined to serve a zone. This can occur at the HVAC system (e.g. multizone), in the ductwork (e.g. dual-duct system) or at the zone level (such as a zone served by a central cooling system and baseboard heating). In some multizone and dual duct systems an unconditioned supply is used to temper either the heating or cooling air through mixing. §144(c) only applies to systems that mix heated and cooled air.

DRAFT

4.10.7 Economizers

Air Economizer is a ducting arrangement and automatic control system that allows a cooling supply fan system to supply outside air to reduce or eliminate the need for mechanical cooling.

When the compliance path chosen for meeting the Standards requires an economizer, the economizer must be integrated into the system so that it is capable of satisfying part of the cooling load while the rest of the load is satisfied by the refrigeration equipment. The Standards also require that all new economizers meet the Acceptance Requirements for Code Compliance before a

final occupancy permit may be granted. The operation of an integrated air economizer is diagrammed in Figure ~~Figure 4-22~~. When outdoor air is sufficiently cold, the economizer satisfies all cooling demands on its own. As the outdoor temperature (or enthalpy) rises, or as system cooling load increases, a point may be reached where the economizer is no longer able to satisfy the entire cooling load. At this point the economizer is supplemented by mechanical refrigeration, and both operate concurrently. Once the outside drybulb temperature (for temperature controlled economizer) or enthalpy (for enthalpy economizers) exceeds that of the return air or a predetermined high limit, the outside air intake is reduced to the minimum required, and cooling is satisfied by mechanical refrigeration only.

Nonintegrated economizers cannot be used to meet the economizer requirements of the prescriptive compliance approach. In nonintegrated economizer systems, the economizer may be interlocked with the refrigeration system to prevent both from operating simultaneously. The operation of a nonintegrated air economizer is diagrammed in Figure 4-222~~Figure 4-23~~. Nonintegrated economizers can only be used if they comply through the performance approach.

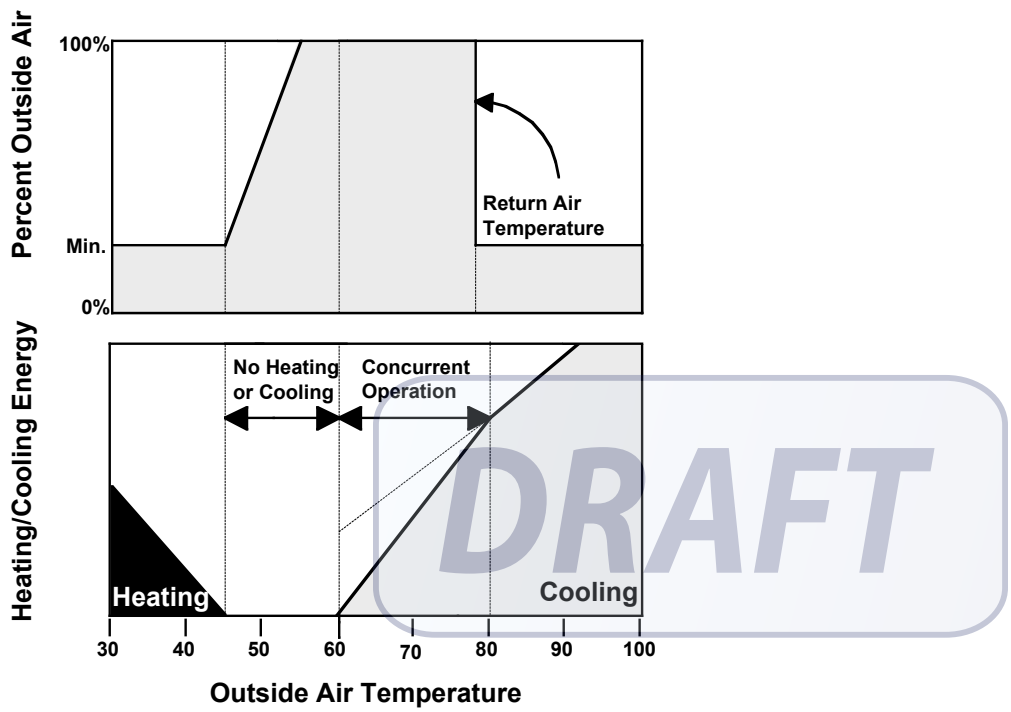

Figure 4-22 – Integrated Air Economizer

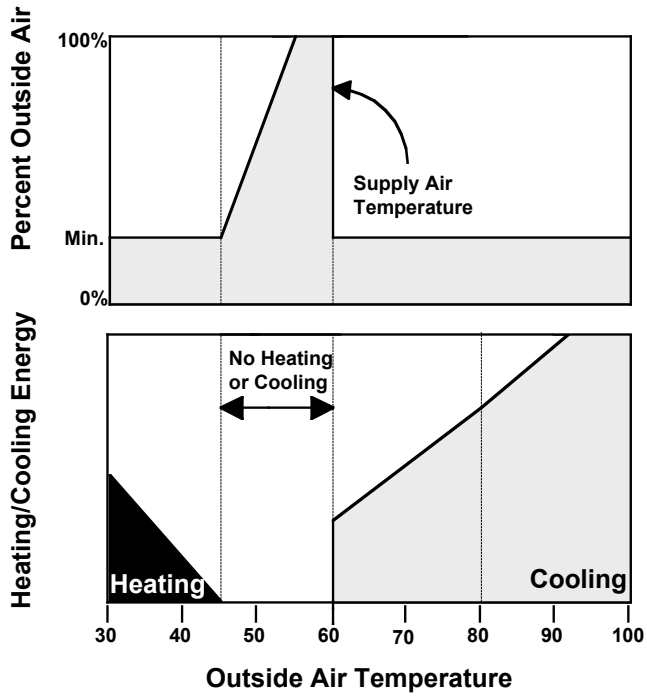

Figure 4-2 – Nonintegrated Air Economizer

Water Economizer is a system by which the supply air of a cooling system is cooled directly or indirectly by evaporation of water, or other appropriate fluid, in order to reduce or eliminate the need for mechanical cooling.

As with an air economizer, a water economizer must be integrated into the system so that the economizer can supply a portion of the cooling concurrently with the refrigeration system.

There are three common types of water-side economizers:

1. **"Strainer-cycle" or chiller-bypass water economizer**. This system, depicted in Figure ~~Figure 4-24~~ below, does *not* meet the prescriptive requirement as it cannot operate in parallel with the chiller. This system is applied to equipment with chilled water coils.

2. **Water-precooling economizer**. This system depicted in Figure ~~Figure 4-25~~ and Figure ~~Figure 4-26~~ below *does* meet the prescriptive requirement if properly sized. This system is applied to equipment with chilled water coils.

3. **Air-precooling water economizer**. This system depicted in Figure ~~Figure 4-27~~ below *also meets* the prescriptive requirement if properly sized. The air-precooling water economizer is appropriate for water-source heat pumps and other water-cooled HVAC units.

To comply with the prescriptive requirements, the cooling tower serving a water-side economizer must be sized for 100% of the anticipated cooling load at the off-design outdoor-air condition of 50°Fdb/45°Fwb. This requires rerunning the

DRAFT

cooling loads at this revised design condition and checking the selected tower to ensure that it has adequate capacity.

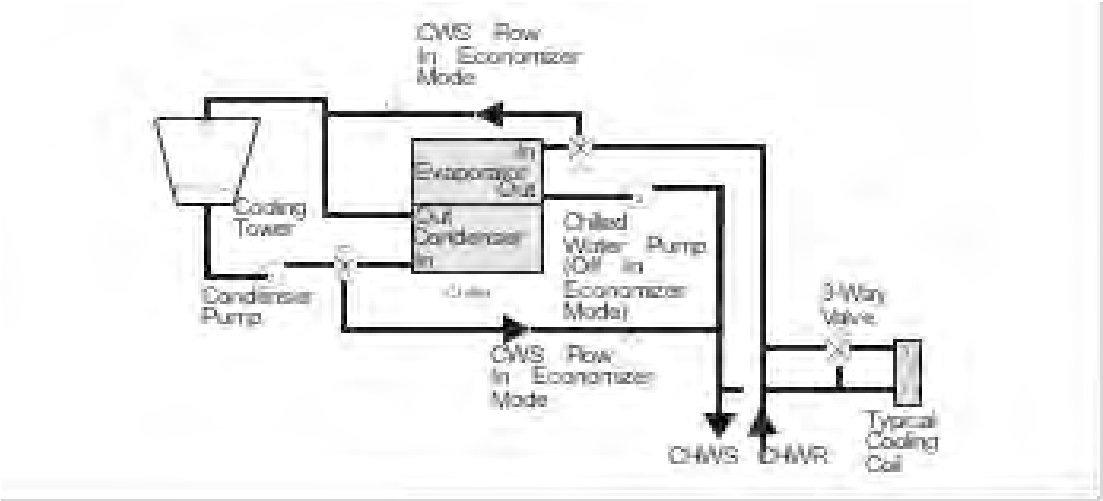

Figure 4-24 – "Strainer-Cycle" Water Economizer
This system does not meet the prescriptive requirement as it cannot operate in parallel with the chiller

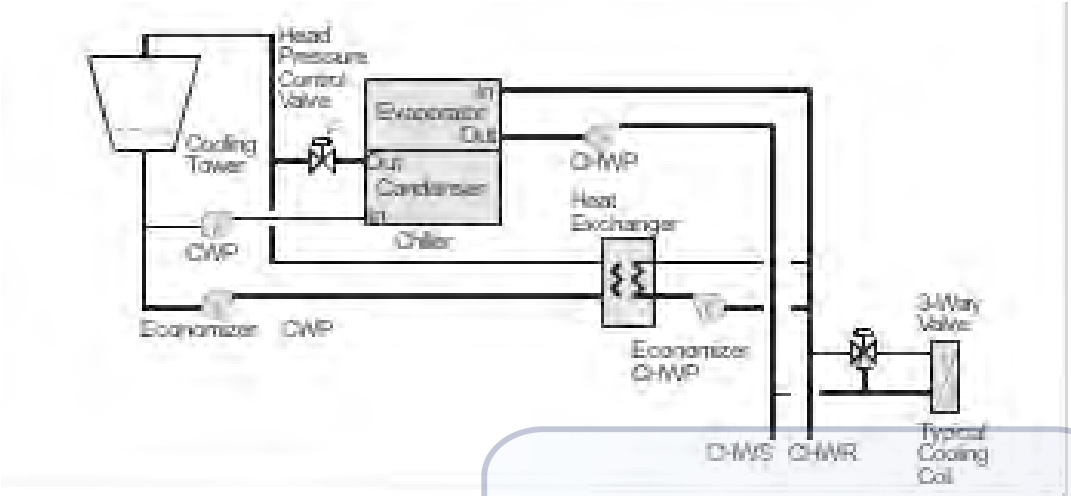

Figure 4-25 – Water-Precooling Water Economizer with Three-Way Valves

DRAFT

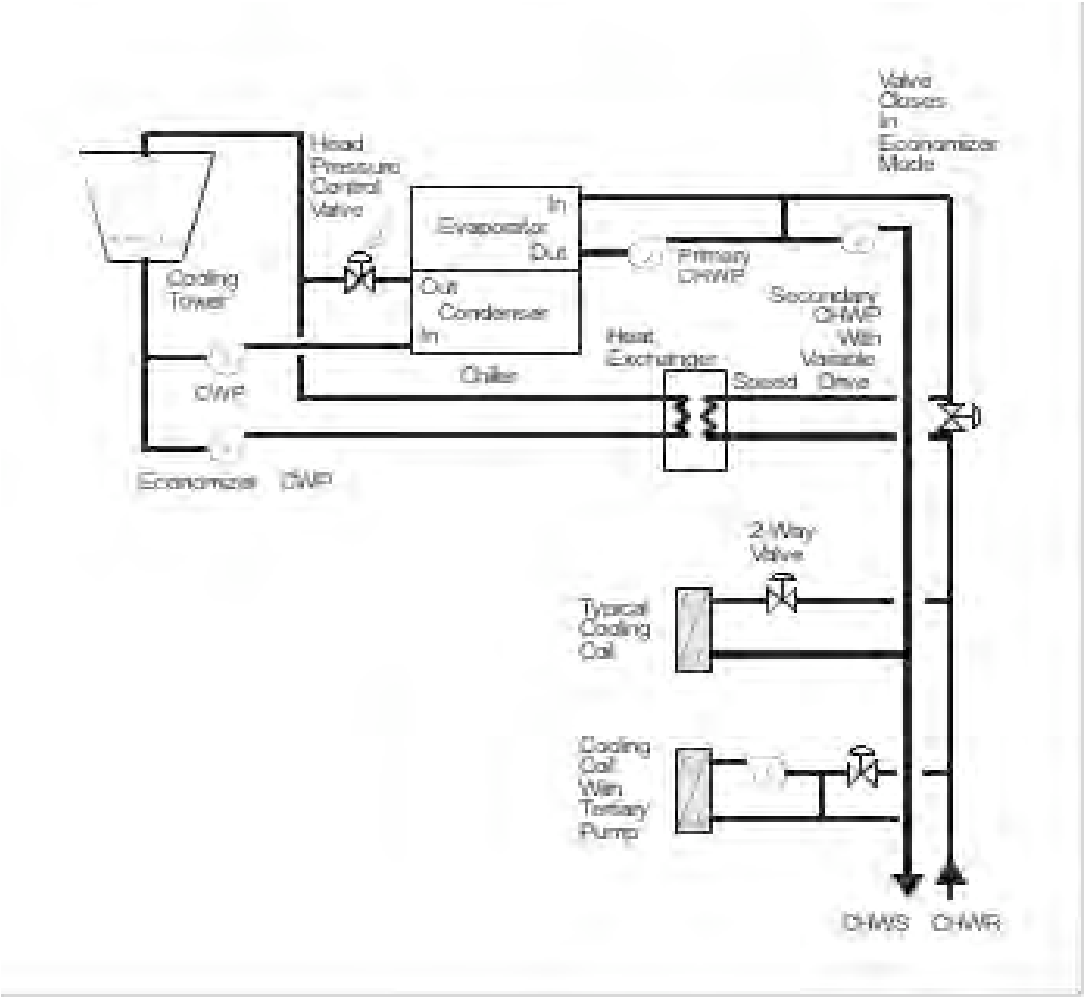

Figure 4-26 – Water-Precooling Water Economizer with Two-Way Valves

DRAFT

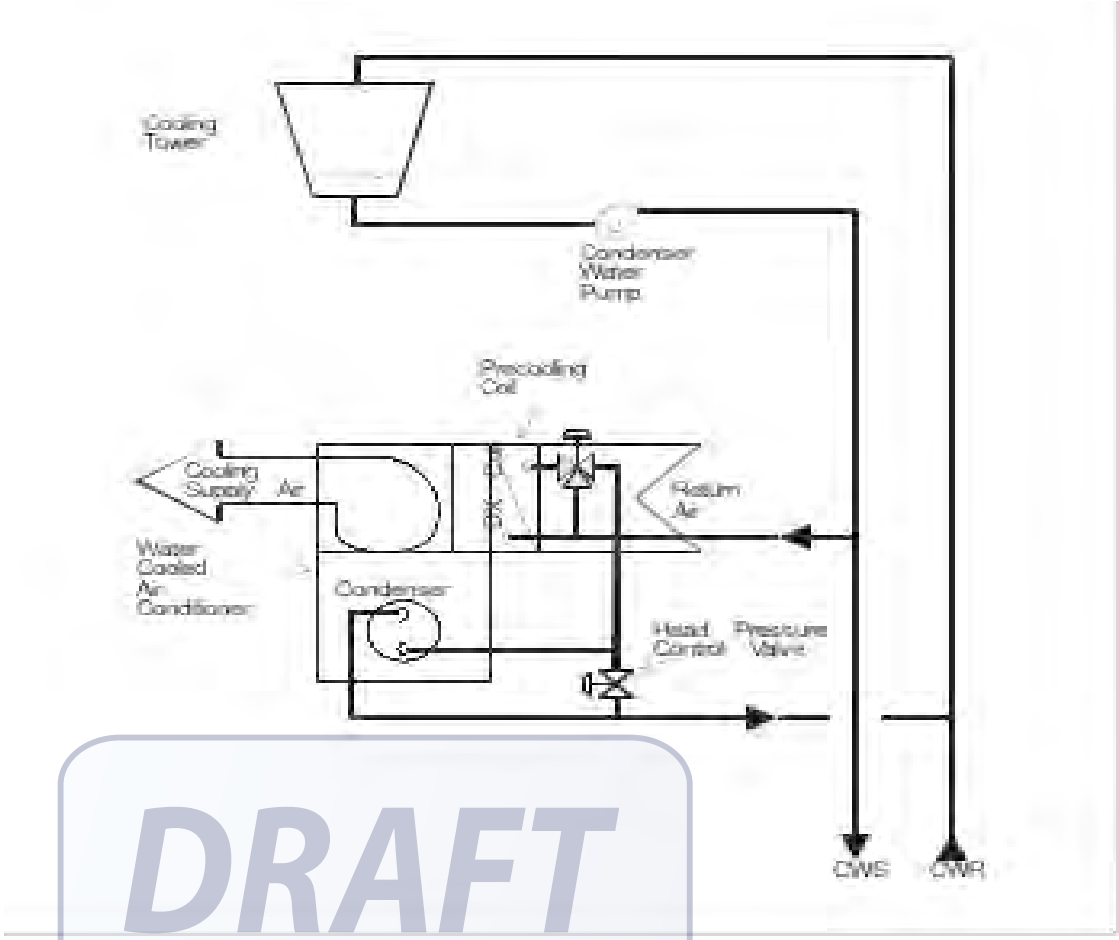

DRAFT

Figure 4-27 – Air-Precooling Water Economizer

4.10.8 Unusual Sources of Contaminants

Section 121 addresses ventilation requirements for buildings and uses the term of "unusual sources of contamination." In this context, such contaminants are considered to be chemicals, materials, processes or equipment that produce pollutants which are considered harmful to humans, and are not typically found in most building spaces. Examples may include some cleaning products, blueprint machines, heavy concentrations of cigarette smoke and chemicals used in various processes.

The designation of such spaces is left to the designer's discretion, and may include considerations of toxicity, concentration and duration of exposure. For example, while photocopiers and laser printers are known to emit ozone, scattered throughout a large space it may not be of concern. A heavy concentration of such machines in a small space may merit special treatment (See Section ???).

4.10.9 Demand Controlled Ventilation

Demand controlled ventilation is required for use on systems that have an outdoor air economizer, and serve a space with a design occupant density, or maximum occupant load factor for egress purposes in the CBC, greater than or equal to 25 people per 1000 ft^2 (40 square foot per person) [§121(c)3]. Demand controlled ventilation is also allowed as an exception in the ventilation requirements for intermittently occupied systems [§121(c)1, §121(c)3 and §121(c)4]. It is a concept in which the amount of outdoor air used to purge one or more offending pollutants from a building is a function of the measured level of the pollutant(s).

§121 allows for demand controlled ventilation devices that employ a carbon dioxide (CO_2) sensor. Carbon dioxide sensors measure the level of carbon dioxide, which is used as a proxy for the amount of pollutant dilution in densely occupied spaces. CO_2 sensors have been on the market for many years and are available with integrated self-calibration devices that maintain a maximum guaranteed signal drift over a 5-year period. ASHRAE Standard 62 provides some guidelines on the application of demand controlled ventilation.

Demand controlled ventilation is available at either the system level (used to reset the minimum position on the outside air damper) and at the zone level (used to reset the minimum airflow to the zone). The zone level devices are sometimes integrated into the zone thermostat.

DRAFT

4.10.10 Intermittently Occupied Spaces

The demand controlled ventilation devices discussed here are allowed and/or required only in spaces that are intermittently occupied. An intermittently occupied space is considered to be an area that is infrequently or irregularly occupied by people. Examples include auction rooms, movie theaters, auditoriums, gaming rooms, bars, restaurants, conference rooms and other assembly areas. Because the standard requires base ventilation requirement in office spaces that are very close to the actual required ventilation rate at 15 cfm per person, these controls may not save significant amounts of energy for these low-density applications. However, even in office applications, some building owners may install CO_2 sensors as a way to monitor ventilation conditions and alert to possible malfunctions in building air delivery systems.

4.11 Mechanical Plan Check Documents

At the time a building permit application is submitted to the building department, the applicant also submits plans and energy compliance documentation. This section describes the forms and recommended procedures documenting compliance with the mechanical requirements of the Standards. It does not describe the details of the requirements; these are presented in Section 4.2. The following discussion is addressed to the designer preparing construction documents and compliance documentation, and to the building department plan checkers who are examining those documents for compliance with the Standards.

The use of each form is briefly described below and then complete instructions for each form are presented in the following subsections. The information and format of these forms may be included in the equipment schedule.

MECH-1-C: Certificate of Compliance
This form is required for every job, and it is required to appear *on the plans*.

MECH-2-C: Air, Water Side, and Service Hot Water & Pool System Requirements
This form summarizes the major components of the heating and cooling systems, and service hot water & pool systems, and documents the location on the plans and in the specifications where the details about the requirements appear.

MECH-3-C: Mechanical Ventilation and Reheat
This form documents the calculations used as the basis for the outdoor air ventilation rates. For VAV systems, it is also used to show compliance with the reduced airflow rates necessary before reheating, re-cooling or mixing of conditioned airstreams.

MECH-4-C: HVAC Misc. Prescriptive Requirements: Other
This form is used to list fan power consumption limits, electric resistance heating system capacity, and centrifugal fan cooling tower limits, and air-cooled chiller limits requirements.

4.11.1 MECH-1-C: Certificate of Compliance

DRAFT

MECH-1-C is the primary mechanical form. Its purpose is to provide compliance information in a form useful to the enforcement agency's field inspectors.

This form should be included on the plans, usually near the front of the mechanical drawings. A copy of these forms should also be submitted to the building department along with the rest of the compliance submittal at the time of building permit application. With building department approval, the applicant may use alternative formats of these forms (rather than the Energy Commission's forms), provided the information is the same and in similar format.

Project Description

- PROJECT NAME is the title of the project, as shown on the plans and known to the building department.
- DATE is the last revision date of the plans. If the plans are revised after this date, it may be necessary to re-submit the compliance documentation to reflect the altered design. The building department will determine whether or not the revisions require this~~is the date of preparation of the compliance submittal package. It should be on or after the date of the plans, and on or before the date of the building permit application~~.
- PROJECT ADDRESS is the address of the project as shown on the plans and known to the building department.

- CLIMATE ZONE is the California Climate zone in which this project is located. See Joint Appendix JA2 for a listing of climate zones.
- BUILDING CONDITIONED FLOOR AREA has a specific meaning under the Standards. The number entered here should match the floor area entered on form ENV-1C.
- ADDITION FLOOR AREA is the floor area of any proposed addition to an existing structure. If the project scope is only for an addition, this number should match the floor area entered on form ENV-1C.

~~***PRINCIPAL DESIGNER - MECHANICAL is the person responsible for the preparation of the mechanical plans, and the person who signs the STATEMENT OF COMPLIANCE (see below). The person's telephone number is given to facilitate response to any questions that arise.***~~

~~***TELEPHONE is the contact phone number of the principal designer or the mechanical engineer in charge of the project.***~~

~~***DOCUMENTATION AUTHOR is the person who prepared the energy compliance documentation. This may or may not be the principal designer (it may be a person specializing in Standards compliance work). The person's telephone number is given to facilitate response to any questions that arise.***~~

~~***TELEPHONE is the contact phone number of the documentation author for the project.***~~

~~***ENFORCEMENT AGENCY USE is reserved for building department record keeping purposes.***~~

General Information

~~1. DATE OF PLANS is the last revision date of the plans. If the plans are revised after this date, it may be necessary to re-submit the compliance documentation to reflect the altered design. The building department will determine whether or not the revisions require this.~~

~~2. BUILDING CONDITIONED FLOOR AREA has specific meaning under the Standards.~~

~~The number entered here should match the floor area entered on form ENV-CC-1-05.~~

~~3. CLIMATE ZONE is the California Climate zone in which this project is located. See Joint Appendix II for a listing of climate zones.~~

1~~4~~. BUILDING TYPE is specified because there are special requirements for high-rise residential and hotel/motel guest room occupancies. All other

occupancies that fall under the Nonresidential Standards are designated "Nonresidential" here. It is possible for a building to include more than one building type.

2~~5~~. PHASE OF CONSTRUCTION indicates the status of the building project described in the documents. Refer to Section **1.6** for detailed discussion of the various choices.

- ~~a.~~ NEW CONSTRUCTION should be checked for all new buildings, newly conditioned space or for new construction in existing buildings (tenant improvements, see Section **Error! Reference source not found.**~~**1.7.10.**~~) that are submitted for envelope compliance.
- ~~b.~~ ADDITION should be checked for an addition which is not treated as a stand-alone building, but which uses Option 2 described in Section **1.7.12.** Tenant improvements that increase conditioned floor area and volume are additions.
- ~~c.~~ ALTERATION should be checked for alterations to existing building mechanical systems (see Section **1.7.12**). Tenant improvements are usually alterations.

~~d. UNCONDITONED SPACE - An affidavit is required that no mechanical system are being installed in a newly constructed enclosed unconditioned buildings. If lighting is installed it must meet all the lighting requirements (see Section **1.7.11**).~~

3~~6~~. PROOF OF ~~ENVELOPE~~ MECHANICAL COMPLIANCE indicates how the ~~envelope~~ mechanical system has been shown to comply. The ~~envelope~~mechanical system must comply before a permit to install a mechanical system is granted:

- PREVIOUS MECHANICAL~~ENVELOPE~~ PERMIT indicates that the mechanical system~~envelope~~ has already been shown to comply. If so, the building department will have the ~~envelope~~mechanical forms on file. This method is typically used for alterations to existing space.
- MECHANICAL~~ENVELOPE~~ COMPLIANCE ATTACHED is typically used for new buildings.
- UNCONDITIONED SPACE requires the submittal of an affidavit indicating that no mechanical system is to be installed in the newly constructed, enclosed unconditioned building. If lighting is installed it must meet all the lighting requirements (see Section 1.7.11).

DRAFT

Statement of Compliance

The Statement of Compliance is signed by both the Documentation Author and the Principal Mechanical Designer who is responsible for preparation of the

plans ~~for the~~of building. This latter person is also responsible for the energy compliance documentation, even if the actual work is delegated to a different person acting as Documentation Author. It is necessary that the compliance documentation be consistent with the plans.

- ~~The Business and Professions Code governs who is qualified to prepare plans, and therefore to sign this statement; check the appropriate box that describes the signer's eligibility. See Section **2.3.3.** in this manual for more information on the Business and Professions Code.~~DOCUMENTAITON AUTHOR is the person who prepared the energy compliance documentation. This may or may not be the principal designer (it may be a person specializing in Standards compliance work). The person's telephone number is given to facilitate response to any questions that arise.
- SIGNATURE is of the documentation author stating that the proposed design of the mechanical system is in conformance with the statement of compliance.
- CEPE is the certification number in the instance that the documentation author is a Certified Energy Plans Examiner.
- DATE is the date the form was completed and should be on or before the date of plan submittal.
- COMPANY NAME is the name of the company for whom the documentation author is employed.
- ADDRESS is the business address of the documentation author.
- PHONE number is that of the documentation author.

DRAFT

The Business and Professions Code governs who is qualified to prepare plans, and therefore to sign this statement; check the appropriate box that describes the signer's eligibility. See Section **Error! Reference source not found.**~~**2.3.3**~~ in this manual for more information on the Business and Professions Code.

- PRINCIPAL DESIGNER-MECHANICAL is the person responsible for the preparation of the mechanical plans, and the person with overall responsibility of the design as state in the Business and Professions Code. The person's telephone number is given to facilitate response to any questions that arise.
- SIGNATURE is of the Principal Mechanical Designer.
- LICENSE is the Professional Engineer license number, or in the case of a contractor it is the Contractor's license number.
- DATE should be on or before the date of the plans.

- COMPANY NAME is the name of the company for whom the Principal Mechanical Designer is employed.
- ADDRESS is the business address of the Principal Mechanical Designer.
- PHONE number is that of the Principal Mechanical Designer.

Compliance Forms and Worksheets
The checkboxes list all applicable compliance forms or worksheets included with the compliance documentation submitted to the building department.

Acceptance Requirements
The Designer is required to list all system and identify the applicable acceptance testing required~~check the box for each type of lighting system in the building when an acceptance test is required~~. ~~Below each box that is checked the Designer is required to list the equipment that must be tested and the number of systems to be tested in parentheses.~~ The Designer should think about
who will be conducting the tests and list this person in the section titled "Test Performed By". Those who are allowed to conduct the tests are the installing contractor, design professional or an agent selected by the owner. Note that a single system may require multiple acceptance tests, depending on the type of system.

4.11.2 MECH-2-C Overview

Mechanical Mandatory and Prescriptive Measures

The mandatory measures and prescriptive measures must be incorporated into the construction documents. MECH-2-C (Parts 1, 2, and 3) list the measures and the section numbers in the Building Efficiency Standards where the requirements for those measures are specified. The columns labeled *Reference on Plans or Specifications* are for designating the specific sheet on the plans or specification section(s) where the measures used to comply with the standards are documented. As noted below the table, a reference to specifications must include both a specification section and paragraph number. The remaining cells in this form are organized with a separate column for each system (or groups of similar systems). In each column, the documentation author shall identify where each of the required measures are specified on the plans or in the project specifications. Where a measure is not applicable to the specific system, the letters "NA" (for not applicable) are placed in the cell. Groups of similar systems can be entered in a single column where appropriate.

In the plans or specifications where the specific details of compliance are shown, the designer may use whatever format is most appropriate for specifying the required measures. This will generally take one of several forms:

- The material is incorporated into an equipment schedule on the mechanical plans. This includes items like equipment efficiencies, capacities (desired

equipment size and calculated required capacity) and some features like air-side economizers.

- The material appears on the plans in a general notes block. ~~An example of these are~~Examples of these are the "mandatory measures block" that was used in previous versions of the Standards.
- The material is incorporated into the specifications. For most control measures this will be in the sequences of operations under the controls specification section. For equipment features like tower flow turndown or heat pump thermostats this will typically be in either the equipment schedules or the specification sections for the specific piece of equipment. Where specifications are used, the documentation must be specific enough to point the code official to the page (or specific paragraph) where the feature is specified.

The information on this form may be incorporated into the plans or on a spreadsheet.

4.11.3 MECH-2-C (Part 1 of 3) Air System Requirements

Item or System Tags

At the start of each column identify each air-side unit or groups of similar units using the system tag(s) from the plans or specifications.

MANDATORY MEASURES

For each item below, identify the plan or specification section where the required feature is specified.

DRAFT

- HEATING EQUIPMENT EFFICIENCY – This is the minimum code-mandated heating equipment efficiency found in §112(a). Where appropriate both full- and part-load efficiency must be identified.
- COOLING EQUIPMENT EFFICIENCY – This is the minimum code-mandated cooling equipment efficiency found in §112(a). Note both the full- and part-load efficiencies must be identified.
- HEAT PUMP THERMOSTAT – For heat pump systems indicate the controls which minimize the use of electric resistance heat as required by §112 (b). The electric resistance heat can only be used for defrost and as a second stage of heating.
- FURNACE CONTROLS – The specified plan sheet must indicate the furnace control requirements of §112 (c) (IID and power venting or flue damper for

furnaces ≥225MBH input rating) and §115 (a) (ignition by other than a pilot light).

- NATURAL VENTILATION – The specifications for operable openings, their control (if appropriate) and location found in §112(b). Note this will likely cross reference architectural plans.
- MINIMUM VENTILATION – The specification for minimum OSA at both the central and zone levels in compliance with §112 (b).
- VAV MINIMUM POSITION CONTROL – For VAV systems identify the specifications for control of minimum OSA at the central system as the airflow turns down as specified in §121(c).
- DEMAND CONTROL VENTILATION – If demand control ventilation systems are either required or provided [§121 (c)] identify the specifications for the CO_2 sensors and controls.
- TIME CONTROL - Identify the control specifications for preoccupancy purge [§121 (c)] and scheduling control [§122 (e)] for each system. This item should be in the control sequences or in the specification for a ~~timeclock~~time clock or programmable thermostat.
- SETBACK AND SETUP CONTROL - If setback or setup controls are required [§121(e)] identify the specifications for these off hour controls. This item should be in the control sequences.
- OUTDOOR DAMPER CONTROL – Identify the specifications for automatic or barometric dampers on OSA and exhaust openings as specified in §122(f).
- ISOLATION ZONES – Identify the specifications for isolation zone controls that are required by §122 (g) for units serving multiple floors or areas in excess of 25,000 ft^2. This item should be in the control sequences.
- PIPE INSULATION – Identify the specifications for pipe insulation greater than or equal to the requirements of §123. Note this is only for the refrigerant piping on split-systems. Hydronic insulation is identified on form MECH-2-C (Part 2 of 3).
- DUCT INSULATION – Identify the specifications for duct insulation greater than or equal to the requirements of §124.

PRESCRIPTIVE MEASURES

DRAFT

- ___CALCULATED HEATING CAPACITY – For units with electric resistance, heat pump or furnace heating either enter the calculated heating capacity in the form or put it on the plans or in the specifications and identify the location in this field. This information could be added to the equipment schedules. For units with hydronic or steam heating enter "NA."
- ___PROPOSED HEATING CAPACITY – For units with electric resistance, heat pump or furnace heating, identify the specification for the proposed unit heating capacity. This is typically the equipment schedule. For units with hydronic or steam heating enter "NA."
- ___CALCULATED COOLING CAPACITY – For units with DX cooling either enter the calculated cooling capacity in the form or put it on the plans or in the specifications and identify the location in this field. This information could be added to the equipment schedules. For units with hydronic cooling enter "NA."
- ___PROPOSED COOLING CAPACITY – For units with DX cooling, identify the specification for the proposed unit cooling capacity. This is typically the equipment schedule. For units with hydronic cooling enter "NA."
- ___FAN CONTROL – For VAV systems, identify the specifications for fan volume control per §144 (c). For constant volume systems, enter NA in these cells. For VAV fan systems over 10 hp, the modulation must be one of the following:
  - ___Variable pitch vanes.
  - ___Variable frequency drive or variable-speed drive.
  - ___Other. A specification for a device that has a 70% power reduction at 50% airflow with a design pressure setpoint of 1/3 of the fan total static pressure.
- ___DP SENSOR LOCATION – Indicate the specification for the placement of the fan pressure sensor to meet the requirements of §144 (c) 2 C. For constant volume systems and VAV systems with DDC controls to the zone level enter "NA."
- ___SUPPLY PRESSURE RESET (DDC only) – For systems with DDC controls to the zone level indicate the sequence of operation that provides supply pressure reset by zone demand.
- ___SIMULTANEOUS HEAT/COOL – Indicate the controls or sequences that stage the heating and cooling or for VAV systems reduces the supply before turning on the zone heating.

DRAFT

- ECONOMIZER – Indicate the specification for an air or water economizer that meets the requirements of §144 (e). The specification must include details of the high limit switch for airside economizers. If an economizer is not required indicate by entering "NA."
- HEAT AND COOL SUPPLY RESET – Indicate the specification for supply temperature reset controls per §144 (f). This will typically be a sequence of operation. This control is required for systems that reheat, re-cool, or mix conditioned air streams.
- ELECTRIC RESISTANCE HEATING
- HEAT REJECTIONS SYSTEM
- AIR COOLED CHILLER LIMITATION
- DUCT SEALING – Indicate the specification for duct leakage testing where required by §144 (k). Note this only applies to small single units with either horizontal discharge or ducts in uninsulated spaces.

4.11.4 MECH-2-C (Part 2 of 3) Water Side System Requirements

Item or System Tags

At the start of each column identify each chiller, tower, boiler, and hydronic loop (or groups of similar units) using the system tag(s) from the plans or specifications.

MANDATORY MEASURES

- This is the minimum code-mandated heating or cooling equipment efficiency. Where appropriate both full- and part-load efficiency must be identified. This is typically identified in the equipment schedules.
- PIPE INSULATION – Identify the specifications for pipe insulation greater than or equal to the requirements of §123.

PRESCRIPTIVE MEASURES

- CALCULATED CAPACITY – For central chillers or boilers enter the calculated capacity in the form or put it on the plans or in the specifications and identify the location in this field. This information could be added to the equipment schedules.
- PROPOSED HEATING CAPACITY – For central chillers or boilers identify the specification for the proposed unit capacity. This is typically the equipment schedule.

DRAFT

- ___TOWER FAN CONTROLS – For cooling towers identify the specifications for fan volume control per §144 (h). Each fan motor 7.5 hp and larger must have a variable speed drive, pony motor or two-speed motor for no less than 2/3rds of the tower cells.
- ___TOWER FLOW CONTROLS – For cooling towers identify the specifications for tower flow control per §144 (h). Each tower cell must turn down to 33% or the capacity of the smallest pump which ever is larger.
- ___VARIABLE FLOW SYSTEM DESIGN – Identify the specifications for two way valves on chilled and hot water systems with more than 3 control valves. This is often shown on the chilled or hot water piping schematic or riser diagram. It is also sometimes identified in the coil schedules.
- ___CHILLER AND BOILER ISOLATION – Identify the specifications for actuated isolation of chiller and boilers in a plant with multiple pieces of equipment and headered pumps. Note this requirement is inherently met by chillers and boilers with dedicated pumps. This is often shown on the chilled or hot water piping schematic.
- ___CHW AND HHW RESET CONTROLS – Indicate the specification for supply water temperature reset controls per §144(j) 4. This will typically be a sequence of operation.
- ___WLHP ISOLATION VALVES – Indicate the specification for water loop heat pump isolation valves to meet the requirements of §144(j) 5.
- ___VSD ON CHW & CW PUMPS > 5HP – Indicate the specification for variable speed drives on variable flow systems with greater than five horsepower as indicated in §144(j) 6.
- ___DP LOCATION – Indicate the specification for the placement of the pump pressure sensor to meet the requirements of §144(j) 6.

DRAFT

4.11.5 MECH-2-C (Part 3 of 3) Service Hot Water & Pool Requirements

Item or System Tags

- ~~4.3.6~~ ___At the start of each column identify each service hot water, pool heating, and spa heating system (or groups of similar units) using the system tag(s) from the plans or specifications.
- ___MANDATORY MEASURES

- WATER HEATER CERTIFICATION – Indicate the specifications for automatic temperature controls capable of adjustment from the lowest to the highest acceptable temperature settings for the intended use as listed in Table 2, Chapter 49 of the ASHRAE Handbook, HVAC Applications Volume. Residential occupancies are exempt from this requirement.
- WATER HEATER EFFICIENCY – This is the minimum code-mandated water heating equipment efficiency and standby losses. Where appropriate both full- and part-load efficiency must be identified. This is typically identified in the equipment schedules.
- SERVICE WATER HEATING INSTALLATION – Indicate the specifications for the outlet temperature control, circulating service water-heating system control, public lavatory temperature control, and tank insulation requirements of §113(c)1 thorough §113(c)4. For newly constructed state buildings, the specified plans shall also show how the building meets the requirement to provide 60% of the energy needed for service water heating from site solar or recovered energy described in §113(c)5 or show that the state architect has determined that these systems are not economically or physically infeasible.
- POOL AND SPA EFFICIENCY AND CONTROL – Indicate the specifications for:
- A minimum efficiency that complies with the Appliance Efficiency Regulations,
- A readily accessible on-off switch, mounted on the outside of the heater that allows shutting off the heater without adjusting the thermostat setting;
- A permanent, easily readable, and weatherproof plate or card that gives instruction for the energy efficient operation of the pool or spa and for the proper care of pool or spa water when a cover is used; and
- A heating source that is not electric resistance.
- Listed package units with fully insulated enclosures and tight-fitting covers insulated to at least R-6 may use electric resistance heating.
- Pools or spas deriving at least 60% of the annual heating energy from site solar energy or recovered energy may use electric resistance heating.

POOL AND SPA INSTALLATION – Indicate the specifications for:

DRAFT

- At least 36 inches of pipe between the filter and the heater to allow for the future addition of solar heating equipment,
- A cover for outdoor pools or outdoor spas,
- Directional inlets and off-peak demand time switches for pools.
- Pools or spas deriving at least 60% of the annual heating energy from site solar energy or recovered energy are accepted from the requirement for covers. Where public health standards require on-peak operations, directional inlets and time switches are not required.
    - ___POOL HEATER – NO PILOT LIGHT – Indicate the specifications for ignition by other than a continuous burning pilot lights as required by §115(c).
    - ___SPA HEATER – NO PILOT LIGHT – Indicate the specifications for ignition by other than a continuous burning pilot lights as required by §115(d).

DRAFT

4.11.6 MECH-3-C: Mechanical Ventilation and Reheat

This form is used to document the design outdoor ventilation rate for each space, and the total amount of outdoor air that will be provided by the space-conditioning or ventilating system. For VAV systems, this form also documents the reduced cfm to which each VAV box must control before allowing reheat.

One copy of this form should be provided for each mechanical system. Additional copies may be required for systems with a large number of spaces or zones. In lieu of this form, the required outdoor ventilation rates and airflows may be shown on the plans or the calculations can be presented in a spreadsheet.

Note that, in all of the calculations that compare a supply quantity to the REQ'D O.A. quantity, the actual percentage of outdoor air in the supply is ignored.

Areas in buildings for which natural ventilation is used should be clearly designated. Specifications must require that building operating instructions include explanations of the natural ventilation system.

Ventilation Calculations

- ___COLUMN A - ZONE/SYSTEM is the system or zone identifier as shown on the plans.
- ___AREA BASIS - Outdoor air calculations are documented in COLUMNS B, C and D. If a space is naturally ventilated, it should be noted here and the

rest of the calculations (COLUMNS B-I and N) skipped.

- COLUMN B - CONDITION AREA (SF) is the area in ft^2 for the SPACE, ZONE, or SYSTEM identified in COLUMN A.
- COLUMN C - CFM PER SF is the minimum allowed outdoor ventilation rate as specified in Standards Table 121-A for the type of use listed.
- COLUMN D - MIN CFM BY AREA is the minimum ventilation rate calculated by multiplying the CONDITION AREA in COLUMN B by the CFM PER Square Feet in COLUMN C.
- OCCUPANCY BASIS outdoor air calculations are calculated in COLUMNS E, F and G.
- COLUMN E - NUMBER OF PEOPLE is determined using one of the methods described in Section 4.3.2.
- COLUMN F - CFM PER PERSON is determined using one of the methods described in Section 4.3.2. Note this is generally 15 cfm/person.
- COLUMN G - MIN CFM BY OCCUPANT is the NUMBER OF PEOPLE multiplied by CFM PER PERSON.
- COLUMN H - REQ'D V.A is the larger of the outdoor ventilation rates calculated on an AREA BASIS or OCCUPANCY BASIS (COLUMN D or G).
- COLUMN I - DESIGN OUTDOOR AIR CFM is the actual outdoor air quantity to be provided based on cooling loads. If this quantity is less than the REQ'D V.A, then TRANSFER AIR (COLUMN N) will have to make up the difference.
- VAV MINIMUM. CFM calculations are made for variable air volume systems only, in COLUMNS J through M.
- COLUMN L, VAV MINIMUM CFM is the largest airflow to which the VAV box supply must be reduced before reheat is permitted. It is calculated as the largest of:
- COLUMN J - Enter 30% of the design zone airflow for cooling; or
- COLUMN K - CONDITION AREA (ft^2) (COLUMN B) x 0.4 cfm/ft^2; or 300 CFM
- COLUMN M – DESIGN MINIMUM SETPOINT. This design setpoint must be less than or equal to COLUMN L and greater than or equal to COLUMN H.

DRAFT

- ___COLUMN N - TRANSFER AIR is the amount of air that must be directly transferred from another space so that the space supply is always no less than REQ'D V.A

On a multiple zone system it is required if the value in COLUMN M is less than the value in COLUMN H. If required, it must be larger than

- ___TRANSFER AIR (COLUMN N) ≥ COLUMN H - COLUMN M

On a single zone system it is required if the value in COLUMN H is less than the OSA schedule for the unit. If required, it must be larger than

- ___TRANSFER AIR (COLUMN N) ≥ COLUMN H – Schedule OSA

TOTALS are summed for

- ___NUMBER OF PEOPLE – This should be consistent with the values used for the load calculations
- ___REQ'D V.A - The values listed on the plans as identified on MECH-2-C, Part 1 of 3 for Minimum Ventilation must be at least this amount. The designer may elect to use a greater amount of outdoor air judged necessary to ensure indoor air quality.
- ___DESIGN Ventilation AIR – This should be consistent with the values used for the load calculations

DRAFT

4.11.7 MECH-4-C: HVAC Misc. Prescriptive Requirements:

Fan Power Consumption

This form is used to document the calculations used in sizing equipment and demonstrating compliance with the fan power requirements when using the prescriptive approach. The PROJECT NAME and DATE, should be entered at the top of the form. See §144(c).

NOTE: Provide one copy of this worksheet for each fan system with a total fan system horsepower greater than 25 hp for Constant Volume Fan Systems or Variable Air Volume (VAV) Systems when using the Prescriptive Approach.

Fan Power Consumption

This section is used to show how the fans associated with the space-conditioning system comply with the maximum fan power requirements. All supply, return, exhaust fans, and space exhaust fans – such as toilet exhausts – in the space-conditioning system that operate during the peak design period must be listed. Included are supply/return/exhaust fans in packaged equipment. Economizer relief fans that do not operate at peak are excluded. Also excluded are all fans that are manually switched and all fans that are not directly associated with moving conditioned air to/from the space-conditioning system, such as condenser fans and cooling tower fans.

If the total horsepower of all fans in the system is less than 25 HP, then this should be noted in the FAN DESCRIPTION column and the rest of this section left blank. If the total system horsepower is not obvious, such as when a VAV system has many fan-powered boxes, then this section must be completed.

VAV fans and constant volume fans should be summarized on separate forms.

- COLUMN A - FAN DESCRIPTION lists the equipment tag or other name associated with each fan.
- COLUMN B - DESIGN BRAKE HORSEPOWER lists the brake horsepower, excluding drive losses, as determined from manufacturer's data.

For dual-fan, dual-duct systems, the heating fan horsepower may be the (reduced) horsepower at the time of the cooling peak. If unknown, it may be assumed to be 35% of design. If this fan will be shut down during the cooling peak, enter 0 in COLUMN B.

If the system has fan-powered VAV boxes, the VAV box power must be included if these fans run during the cooling peak (i.e. series style boxes). The power of all boxes may be summed and listed on a single line. If the manufacturer lists power consumption in watts, then the wattage sum may be entered directly in COLUMN F. Horsepower must still be entered in COLUMN B if the designer intends to show that total system has less than 25 HP.

DRAFT

- COLUMNS C & D - EFFICIENCY lists the efficiency of the MOTOR and DRIVE. The default for a direct drive is 1.0; belt drive is 0.97. If a variable-speed or variable-frequency drive is used, the drive efficiency should be multiplied by that device's efficiency.
- COLUMN E - NUMBER OF FANS lists the number of identical fans included in this line.
- COLUMN F - PEAK WATTS is calculated as:

((BHP x Number of Fans x 746W/HP) / (Motor Efficiency, E_m x Drive Efficiency, E_d) where *BHP* (COLUMN B) is the design brake horsepower as described above, E_m (COLUMN C) and E_d (COLUMN D) are the efficiency of the motor and the drive, respectively, and

Totals and Adjustments

- TOTALS FANS SYSTEMS POWER is the sum of all PEAK WATTS from (COLUMN F). Enter sum in provided box at the right.
- SUPPLY DESIGN AIRFLOW (CFM) Enter sum in provided box at the right (under

COLUMN F) to identify the design airflow of the system.

- TOTAL FAN SYSTEM POWER INDEX, W/cfm is calculated by dividing the total PEAK WATTS (COLUMN F) by the total cfm. To comply, total space-conditioning system power demands must not exceed 0.8 W/cfm for constant volume systems, or 1.25 W/cfm for VAV systems. See §144(c).

If filter pressure drop is greater than 1 inch W. C. Enter filter air pressure drop. SP_a on line 4 and total pressure drop across the fan SP_f on Line 5, otherwise leave blank and go to Line 7. See §144(c)3.

- SP_a is the air pressure drop across the air treatment or filtering system.
- SP_f is the total pressure drop across the fan.
- FAN ADJUSTMENT is the adjusted fan power index = 1-(SPa – 1)/ SPf.
- ADJUSTED FAN POWER INDEX is the total fan systems power index multiplied with the fan adjustment (Line 3 x Line 6). Note: TOTAL FAN SYSTEM POWER INDEX or ADJUSTED FAN POWER INDEX must not exceed 0.8 W/cfm, for Constant Volume systems or 1.25 W/cfm for VAV systems).

This bottom portion of the form is used to document the Electric Resistance Heating, Heat Rejection System and Air Cooled Chiller Limitations.

DRAFT

Electric Resistance Heat Limitation

In the capacity column, enter the total installed capacity of all electric heat exclusive of electric heat for heat pumps. If electric heat is used, identify in the exception column, which exceptions to §144(g) apply.

Enter notes to building department in the Notes column.

Centrifugal Fan Cooling Tower Limitation

In the capacity column, enter the total installed capacity of the centrifugal cooling towers. If centrifugal fan cooling towers are used, identify in the exception column which exceptions to §144(h) apply.

Enter notes to building department in the Notes column.

Air-cooled Chiller Limitation

In the capacity column, enter the total installed capacity of air-cooled chillers. In the second box, If the total installed capacity of the chiller plant is greater than

300 tons and the total installed capacity of air-cooled chillers is greater than 100 tons, identify in the exception column which exceptions to §144(i) apply.

Enter notes to building department in the Notes column.

4.11.8 Mechanical Inspection

The mechanical building inspection process for energy compliance is carried out along with the other building inspections performed by the building department. The inspector relies upon the plans and upon the MECH-1-C Certificate of Compliance form printed on the plans (See Section 4.11.1).

4.11.9 Acceptance Requirements

Acceptance requirements can effectively improve code compliance and help determine whether mechanical equipment meets operational goals and whether it should be adjusted to increase efficiency and effectiveness.

Acceptance tests are described in detail in Section 8.

Process

The process for meeting the acceptance requirements includes:

- Document plans showing thermostat and sensor locations, control devices, control sequences and notes,
- Review the installation, perform acceptance tests and document results, and
- Document the operating and maintenance information, complete installation certificate and indicate test results on the Certificate of Acceptance, and submit the Certificate to the building department prior to receiving a final occupancy permit.

DRAFT

Administration

The administrative requirements contained in the Standards require the mechanical plans and specifications to contain:

- Requirements for acceptance testing for mechanical systems and equipment shown in Table 4-6.

Table 4-6– Mechanical Acceptance Tests

Variable Air Volume Systems
Constant Volume Systems
Package Systems
Air Distribution Systems
Economizers
Demand Control Ventilation Systems
Ventilation Systems
Variable Frequency Drive Fan Systems
Hydronic Control Systems
Hydronic Pump Isolation Controls and Devices
Supply Water Reset Controls
Water Loop Heat Pump Control
Variable Frequency Drive Pump Systems

Requirement that within 90 days of receiving a final occupancy permit, record drawings be provided to the building owners,

Requirement that operating and maintenance information be provided to the building owner, and

Requirement for the issuance of installation certificates for mechanical equipment.

For example, the plans and specifications would require an economizer. A construction inspection would verify the economizer is installed and properly wired. Acceptance tests would verify economizer operation and that the relief air system is properly functioning. Owners' manuals and maintenance information would be prepared for delivery to the building owner. Finally, record drawing information, including economizer controller set points, must be submitted to the building owner within 90 days of the issuance of a final occupancy permit.

DRAFT

Plan Review

Although acceptance testing does not require that the construction team perform any plan review, they should review the construction drawings and specifications to understand the scope of the acceptance tests and raise critical issues that might affect the success of the acceptance tests prior to starting construction. Any construction issues associated with the mechanical system should be forwarded to the design team so that necessary modifications can be made prior to equipment procurement and installation.

Testing

The construction inspection is the first step in performing the acceptance tests. In general, this inspection should identify:

Mechanical equipment and devices are properly located, identified, calibrated and set points and schedules established.

Documentation is available to identify settings and programs for each device, and

For air distribution systems, this may include select tests to verify acceptable leakage rates while access is available.

Testing is to be performed on the following devices:

Variable air volume systems.

Constant volume systems.

Package systems.

Air distribution systems.

Economizers.

Demand control ventilation systems.

Variable frequency drive fan systems.

Hydronic control systems.

Hydronic pump isolation controls and devices.

Supply water reset controls.

Water loop heat pump control.

Variable frequency drive pump systems.

System programming.

Time clocks.

Chapter 10~~8~~ contains information on how to complete the acceptance forms. Example test procedures are also available in Chapter 10~~8~~.

DRAFT

Roles and Responsibilities

The installing contractor, engineer of record or owners agent shall be responsible for documenting the results of the acceptance test requirement procedures including paper and electronic copies of all measurement and monitoring results. They shall be responsible for performing data analysis, calculation of performance indices and crosschecking results with the requirements of the Standards. They shall be responsible for issuing a Certificate of Acceptance. Building departments shall not release a final Certificate of Occupancy until a Certificate of Acceptance is submitted that demonstrates that the specified systems and equipment have been shown to be performing in accordance with the Standards. The installing contractor, engineer of record or owners agent upon completion of undertaking all required acceptance requirement procedures shall record their State of California Contractor's License number or their State of California Professional Registration License Number on each Certificate of Acceptance that they issue.

Contract Changes

The acceptance testing process may require the design team to be involved in project construction inspection and testing. Although acceptance test procedures do not require that a contractor be involved with a constructability review during design-phase, this task may be included on individual projects per the owner's request. Therefore, design professionals and contractors should review the contract provided by the owner to make sure it covers the scope of the acceptance testing procedures as well as any additional tasks.

DRAFT

5. Indoor Lighting

- 5.1 Overview
- 5.2 Lighting Design Procedures
  - 5.2.1 Mandatory Measures
    - 5.2.1.1 California Appliance Standards (Title 20) Compliance
    - 5.2.1.2 Lighting Equipment Certification
    - 5.2.1.3 Mandatory Lighting Controls
    - 5.2.1.4 Dwelling Unit Mandatory Requirements
    - 5.2.1.5 Mandatory Daylight Controls
  - 5.2.2 Lighting Power Allowances
    - 5.2.2.1 Allowed Lighting Power
    - 5.2.2.2 Indoor Lighting Power Trade Offs
    - 5.2.2.3 Nonresidential Types of Use and Function Area Definitions
  - 5.2.3 Miscellaneous Applications
    - 5.2.3.1 High Rise Residential Dwelling Units and Hotel/Motel Guest Rooms
    - 5.2.3.2 Theme Parks
    - 5.2.3.3 Exit Way and Egress Lighting
    - 5.2.3.4 Historic buildings
- 5.3 Prescriptive Approach
  - 5.3.1 Complete Building Method
  - 5.3.2 Area Category Method
  - 5.3.3 Tailored Method
- 5.4 Performance Approach
- 5.5 Calculating Lighting Power
  - 5.5.1 Exempt Lighting
  - 5.5.2 Actual Lighting Power Calculation
  - 5.5.3 Determining Luminaire Wattage
  - 5.5.4 Reduction of Wattage Through Controls
- 5.6 Additions and Alterations
- 5.7 Compliance and Enforcement
  - 5.7.1 Lighting Plan Check Documents
  - 5.7.2 Installation Certificate
  - 5.7.3 Certificate of Acceptance

DRAFT

This chapter covers the requirements for indoor lighting design and installation, including controls. It is addressed primarily to lighting designers or electrical engineers and to enforcement agency ~~building department~~ personnel responsible for lighting and electrical plan checking and inspection. Chapter 6 addresses outdoor lighting applications.

Indoor lighting is one of the single largest consumers of energy (kilowatt-hours) in a commercial building, representing about a third of electricity use. The objective of the Standards is the effective reduction of this energy use, without compromising the quality of lighting or task work. The Standards are the result of the involvement of many representatives of the lighting design and manufacturing community, and of ~~building department~~ enforcement agencies across the state. A great deal of effort has been devoted to making the lighting requirements practical and realistic.

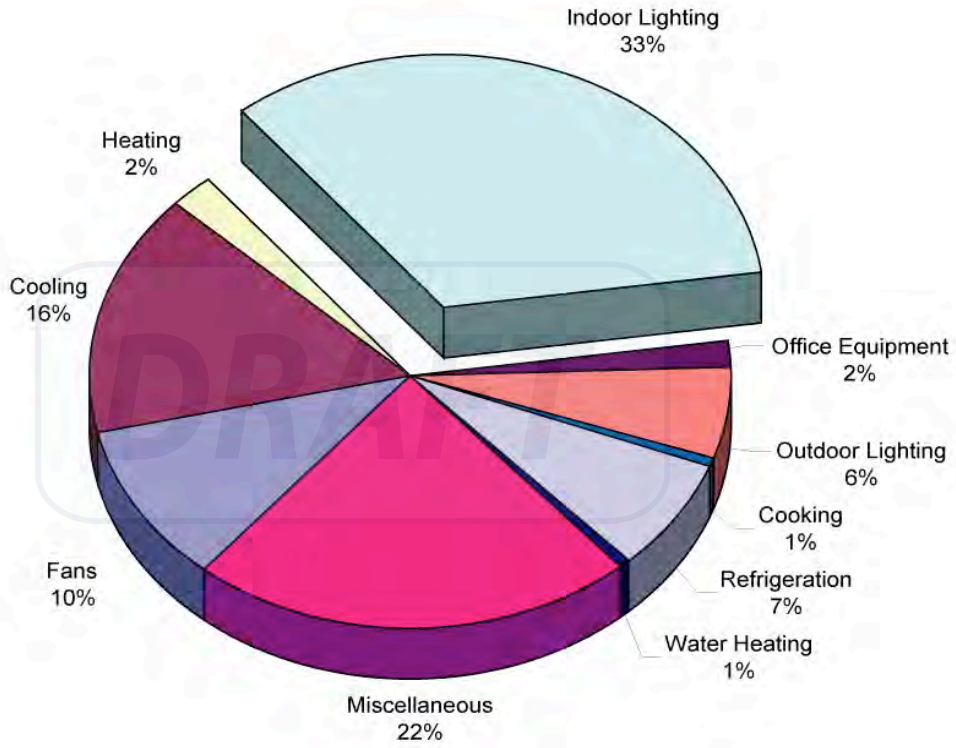

Figure 5-1~~1~~– Lighting Energy Use

Lighting accounts for about one third of commercial building electricity use in California. Source IEQ RFP, December 2002, California Energy Commission No. 500-02-501

5.1 Overview

The primary mechanism for regulating indoor lighting energy under the Standards is to limit the allowable lighting power (watts) installed in the building.

Other mechanisms require basic equipment efficiency, and require that the lighting is controlled to permit efficient operation.

§119, §130, §131

Mandatory measures apply to all lighting systems and equipment. These requirements may include manual switching, daylit area controls, and automatic shut-off controls. New for 2008 are requirements for dimmers, track lighting integral current limiters, high efficacy LED light sources, ballast for residential recessed luminaires, and dimmable fluorescent ballasts when those ballast are used to obtain a power adjustment factor. The mandatory requirements must be met under either the prescriptive or performance approach.

§146(a)

Allowed lighting power for a building is determined by one of the following four methods:

1. ***Prescriptive Approach - Complete building method****:* applicable when the entire building's lighting system is designed and permitted at one time, and when at least 90% of the building is one primary type of use ~~(for retail or wholesale stores, at least 70% of the building must be merchandise sales function area)~~. In some cases, the complete building method may be used for an entire tenant space in a multi-tenant building. A single lighting power value governs the entire building [§146(b)1]. See Section 5.3.1.
2. ***Prescriptive Approach - Area category method:*** applicable for any permit situation, including tenant improvements. Lighting power values are assigned to each of the major function areas of a building (offices, lobbies, corridors, etc.). See Section ~~5.2.2. B. Area Category Method~~5.3.2.
3. ***Prescriptive Approach - Tailored method***: applicable when additional flexibility is needed to accommodate special task lighting needs in specific task areas. Lighting power allowances are determined room-by-room and task-by-task, with the area category method used for other areas in the building. See Section ~~5.2.2 C. Tailored Method~~5.3.3.
4. ***Performance approach***: applicable when the designer uses an Energy Commission certified computer program to demonstrate that the proposed building's energy consumption, including lighting power, meets the energy budget. The performance approach incorporates one of the three previous methods which sets the appropriate Allowed Lighting Power Density used in calculating the building's custom energy budget. The performance approach may only be used to model the performance of lighting systems that are covered under the building permit application. See Section ~~1.7~~ 5.4.

Actual lighting power (adjusted) is based on total design wattage of lighting, less adjustments for any qualifying automatic lighting controls, such as occupant-sensing devices or automatic daylighting controls.
The actual lighting power (adjusted) must not exceed the allowed lighting power for the lighting system to comply.

5.1.1 Lighting Trade-offs

The Standards restrict the overall installed lighting power in the building, regardless of the compliance approach. However, there is no general restriction regarding where or how general lighting power is used. This means that installed lighting may be greater in some areas of the building and lower in others, as long as the total does not exceed the allowed lighting power. See Section 5.2.2.2 for additional information about lighting tradeoff restrictions.

There is another type of lighting tradeoff available under the Standards. This is the ability to make tradeoffs under the performance approach between the lighting system and the envelope or mechanical systems. Tradeoffs can only be made when permit applications are sought for those systems involved. For example, under performance compliance, a building with an envelope or mechanical system that is more efficient than the prescriptive efficiency requirements might be able to meet the allowed performance energy budget with more lighting power than allowed under the prescriptive approach. When a lighting power allowance is calculated using the performance approach, the allowance is treated exactly the same as an allowance determined using one of the other compliance methods. No tradeoffs are allowed between indoor lighting and outdoor lighting or with lighting that is in unconditioned spaces.

Example 5-1~~1~~

Question

Under the area category method, a mixed-use building is determined to have an allowed lighting power of 23,500 W. As part of this determination, ~~an~~private office areas less than 250 ft^2 within the building ~~is~~are found to have an allowance of ~~1.2~~1.1 W/ft^2. One of the private offices within this area is designed with an actual lighting power density of 2.0 W/ft^2. Is this permitted?

Answer

Yes. Provided the actual lighting power of the entire building does not exceed the 23,500 W limit, there is no limit on the individual office.
This is true for general lighting no matter what method is used to determine the allowed lighting power.

Note that it is not necessary to specify precisely where the watts come from when a trade-off occurs. These details are not needed for compliance; any individual trade-offs are included in the totals. It is only necessary to demonstrate that the actual total watts for the building does not exceed the total allowable. Trade-offs are not allowed with so-called "use-it-or-lose-it" categories of lighting. These are specific task or display lighting applications, such as chandeliers under the area category method or display lighting under the tailored method, where the allowable lighting power for the application is determined from:

1. Wattage allowance specified by the Standards.
2. Actual wattage of the fixture(s) assigned to the application.

For use-it-or-lose it applications, the allowable lighting power is the lesser of these two wattages. This means that the allowance cannot exceed the actual lighting wattage. If the actual lighting watts are lower than the allowance, the remaining watts in the allowance are not available for trade-off to other areas of the building.

Example 5-22

Question
A display lighting application (one of the use-it-or-lose-it applications) is determined to have a lighting power allowance of 350 W. The actual luminaires specified for the display total 300 W. How does this affect the allowed watts and the actual watts (adjusted if applicable) for the building?

Answer

The lower value, 300 W, is shown as total allowed watts for the building. The actual lighting power is also 300 W. There are no watts available for use through trade-offs elsewhere in the building.

Example 5-33

Question

A display lighting application is determined to have a lighting power allowance of 500 W. The actual luminaires specified for the display total 600 W. How does this affect the allowed watts and the actual watts (adjusted if applicable) for the building?

Answer

As before, the lower value, 500 W in this case, is shown as the total allowed watts for the display. The proposed lighting power will include the full 600 W. For the building lighting to comply, the extra 100 W used by the display fixtures must be traded-off against eligible lighting systems such as general lighting from elsewhere in the building.
Lighting control credits reduce the actual installed watts, making it easier to meet the allowed watts. The specific calculations involved in the trade-offs discussed in this section are carried out on the compliance forms.

DRAFT

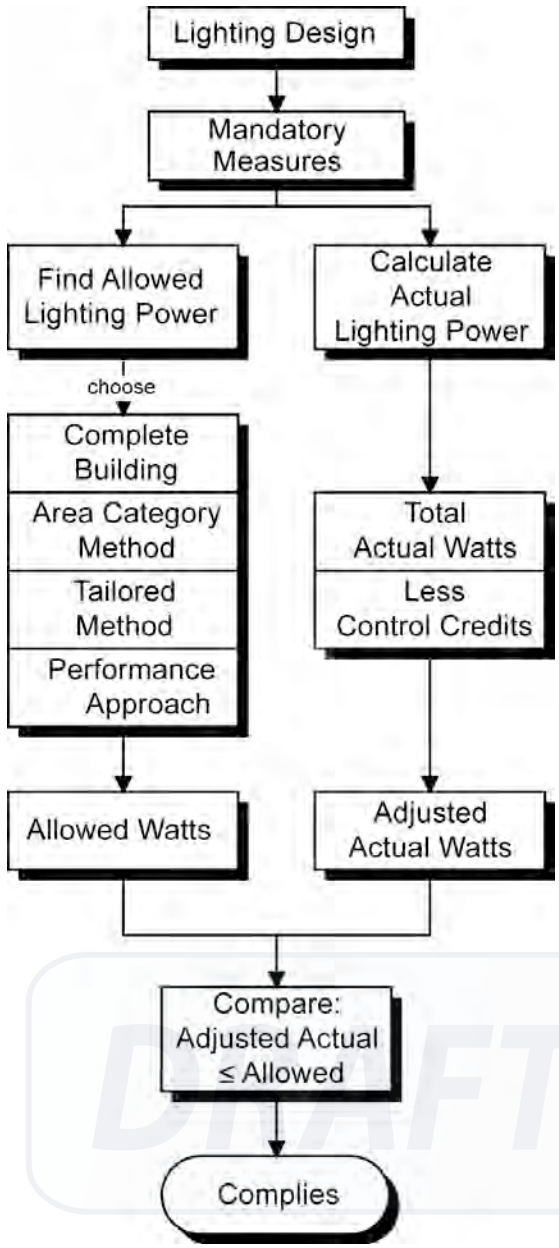

Figure 5-2~~2~~ – Lighting Compliance Flowchart

5.1.2 Forms, Plan Check, Inspection and Acceptance Tests

Chapter 2 of this manual provides an overview of the documentation requirements and the process of complying with the energy standards. Additionally, acceptance requirements are covered in Section 5.7.3, and lighting plan check documents are covered in Section 5.7.1 of this chapter. This process includes providing documentation that shows a building complies with all of the pertinent requirements of the Standards. After this is reviewed and approved during plan check, construction may begin. During and after construction, there are periodic inspections to assure that all required energy features are installed. At the end of construction, acceptance tests are performed on HVAC and lighting controls to assure they are installed and work correctly.

If inspections or acceptance testing uncover systems that are not installed as shown in the plans and documentation, or are found not to be operating correctly through acceptance testing, these defects have to be fixed before the building is approved. Once approved by the code official as complying with all the building code requirements including the energy code, the building receives a certificate of occupancy.

DRAFT

5.2 Lighting Design Procedures

This section discusses how the requirements of the Standards affect lighting system design. For procedures on documenting the lighting design, including compliance forms, see Section 5.7. For information on Lighting Equipment Certification, see Section.5.2.1.2

5.2.1 Mandatory Measures

The mandatory features and devices must be included in the building design whether compliance is shown by the prescriptive or the performance approach. These features have been proven cost-effective over a wide range of building occupancy types.

There are four main types of mandatory measures:

1. Lighting equipment complies with the Title 20 appliance efficiency regulations.
2. Lighting controls are certified to comply with the requirements of Title 24 Section 119 and are listed in the Directory of Automatic Lighting Control Devices
3. High efficacy lighting and lighting control requirements in dwelling units
4. Mandatory control requirements for certain applications

Many of the mandatory features and devices are requirements for manufacturers of building products, who must certify the performance of their products to the Energy Commission. It is the responsibility of the designer~~, however,~~ to specify products that meet these requirements. It is the responsibility of the installer to comply with all of the mandatory requirements, even if the plans mistakenly do not. Code enforcement officials, in turn, check that the mandatory features and specified devices are installed.

5.2.1.1 California Appliance Standards (Title 20) Compliance

§111

Lighting products regulated by the California Appliance Efficiency Regulations (Title 20) must be certified to the Energy Commission by the manufacturer before they can be sold in California stores or specified on California building projects subject to the Title 24 building efficiency standards. The California Title 20 appliance regulations include requirements for both federally-regulated appliances and non-federally-regulated appliances. The Title 20 regulations apply to appliances that are sold or offered for sale in California, except those sold wholesale in California for final retail sale outside the state and those designed and sold exclusively for use in recreational vehicles or other mobile equipment.

Key lighting equipment that have separate California appliance efficiency standards include:

- Metal halide luminaires (≤ 500W must be pulse start, electronic ballasts of ballast efficiency ≥ 88%)
- Exit signs (appliance standard requires less than 5 Watts per face)
- Torchieres (requirement of no more than 190 Watts).
- Lighting of cabinets and wine chillers (lighting efficacy comparable to T-8 fluorescent lamps with electronic ballasts,)
- Lighting of beverage vending machines (automatic controls for placing cooling and lighting in low power mode)

The Title 20 regulations can be downloaded from:
http://www.energy.ca.gov/appliances/

5.2.1.2 Lighting Equipment Certification

§119

The mandatory requirements for lighting control devices specify minimum features for automatic time switch controls, occupant-sensing devices, automatic daylighting controls, ~~and~~ indoor photosensors, dimmers, track lighting integral current limiters, high efficacy and LED light sources. There are also mandatory requirements for dimmable fluorescent ballasts when used to obtain a power adjustment factor.

The 2008 Standards ~~also~~ clarify that lighting control devices may be individual devices or systems consisting of two or more components. For control systems consisting of two or more components, such as an Energy Management Control System (EMCS), the manufacturer of the control system shall certify each of the components required for the system to comply with §119.

This section addresses all of the lighting equipment regulated in §119. Most of this lighting equipment is used in nonresidential indoor applications. However, some of the lighting equipment requirements in this section are used in outdoor or residential applications only.

Many of these requirements are part of standard practice in California and should be well understood by those responsible for designing or installing lighting systems. The lighting control acceptance tests verify that equipment are capable of meeting the requirements in Section 119. If the equipment installed equipment cannot meet these requirements, it must be replaced, thus it is very important that electrical designers are aware of the requirements of this section.

All ~~automatic~~ lighting control devices, ballasts, and luminaires that are subject to the requirements of §119 and installed to comply with mandatory requirements or to obtain control credits must be certified by the manufacturer before they can be installed in a building. The manufacturer must certify the devices to the Energy Commission.

Once a device is certified, it will be listed in the Directory of Automatic Lighting Control Devices, which is available from the link below:
http://www.energy.ca.gov/appliances/appliance/excel_based_files/controls/
Call the Energy Hotline at 1-800-772-3300 to obtain more information.

If the lighting control you would like to specify is not in the Directory of Automatic Lighting Control Devices, call the manufacturer and ask them to apply to the California Energy Commission for certification of their product. The requirements of Section 119 are listed here so the designer can make verify the product is certified for the intended application.

A. Installation and Calibration

§119(a)

All devices must have instructions for installation and start-up calibration and must be installed in accordance with such directions [§130(a)]

B. Indicator Lights

§119(b)

Indicator lighting that is integral to lighting control devices shall consume no more than one watt of power per indicator light.

C. Automatic Time Switch~~es~~ Control Devices

§119(c)

Automatic time switch~~es~~ control devices, ~~sometimes called~~typically a time clock~~s~~ or Energy Management Control System (EMCS), are programmable switches that are used to automatically shut-off the lights according to pre-established schedules depending on the hours of operation of the building. The device ~~should~~ must have the capability to store two separate daily programs (for weekdays and weekends). ~~To prevent losing the time of day and the programmed schedules, the time switch must contain back-up power for at least 10 hours during power interruption.~~The automatic time switch control device must have program backup capabilities that prevent the loss of the device's schedules for at least 7 days, and the device's time and date setting for at least 72 hours if power is interrupted. Most building automation systems can meet these requirements, provided they are certified to the Energy Commission.

D. Occupant~~-~~ Sensors, Motion Sensors, and Vacancy Sensors

§119(d)

The 2008 Standards typically refer to occupant sensors for indoor nonresidential lighting applications, motion sensors for outdoor lighting applications, and vacancy sensors for residential manual-on/automatic-off applications.

Occupant, motion, and vacancy-sensing devices shall be capable of automatically turning off all of the lights in an area no more than 30 minutes after the area has been vacated~~.~~, and shall have a visible status signal that indicates that the device is operating properly or that it has failed of malfunctioned. The visible status signal may have an override switch that turns the signal off. Additionally, the following sensors must meet special requirements:

1. The ultrasonic type must meet certain minimum health requirements in accordance with §119(d)1, and have the built-in ability for sensitivity calibration (to reduce false signals for both on and off).
2. The microwave devices must have emission controls, permanently affixed installation requirements, and built-in sensitivity adjustment in

accordance with §119(d)2. Microwave devices are rarely used in occupant sensors.

E. Multi-level Occupancy Sensors

§119(e)

Multi-level occupancy sensors, provide more energy savings than simple on/off occupancy sensors because they give the occupant the choice to turn only a faction of the lights each time the room is entered. Like all other occupancy sensors, these sensors turn off all of the lights when the space is vacated.

Multi-level occupancy sensors provide either automatic on or manual on control of 30% to 70% of lighting when a space is entered. A separate switch must turn on the rest of the lights. Since the multi-level occupancy controls must turn on only a fraction of the lights when the room is entered, this control cannot be provided with a standard occupancy sensor and two standard switches.

This type of control can be accomplished with a special multi-level occupancy sensor or by installing switches with latching relays (sentry switches) in combination with a standard occupancy sensor.

F. Automatic Daylighting Control Devices

§119(~~e~~f)

Daylighting controls consist of photosensors that compare actual illumination levels with a reference illumination level and reduce the electric lighting until the reference level has been reached. These controls may be used to apply for power adjustment factor (PAF) lighting credits in the daylit areas near windows or under skylights as defined in Table 146-C of the Standards. If one wishes to use automatic daylighting controls to satisfy the mandatory requirements for controls under skylights or in the primary sidelit daylit area and associated power adjustment factor (PAF) credits, additional multi-level requirements must be met [see §131(c), §119(i)].
When automatic daylighting control devices and systems are used, they must be certified to the Energy Commission that they meet all of the following requirements:

1. The device shall have the ability to automatically reduce the general lighting power of the controlled area by at least ~~50% uniformly (either by separate control of multiple lamps or by dimming)~~ two-thirds of rated power consumption in response to available daylight. It should be noted that some dimming technologies (such as metal halide) are unable to reduce power consumption by two-thirds. In this case, the control has to be able to turn off some of the lamps or be applied to a different light source.

2. ~~When a dimmer is used, provide reduced flicker operation (see definitions) over the dimming range without causing premature lamp failure.~~ If the device is a dimmer controlling incandescent or fluorescent lamps, the device shall provide electrical outputs to the lamps for reduced flicker operation throughout the dimming range, so that the light output has an amplitude modulation of less than 30% for frequencies

less than 200 Hz, and without causing premature lamp failure.

If the control causes the lamps to flicker it is likely the control will be disabled. It is important to have the dimming ballast manufacturer provide to the designer an assurance that the dimming control will work without flicker in the designed application. This can be a function of the extent of dimming, the ballast itself, the lead length between the ballast and lamps and whether the leads are in metallic conduit.

3. ~~For stepped dimming, provide a time delay that prevents cycling of the lights in less than 3 minutes. This is typically accomplished by a time delay of 3 minutes before electric lighting is reduced but usually a much shorter delay before electric lighting is increased.~~ If the device reduces lighting in control steps, the device shall incorporate time-delay circuits to prevent cycling of the light level changes of less than three minutes. The device shall have a manual or automatic means of adjusting the deadband to provide separation of on and off points for each control step.

   Note that this is two separate requirements: a minimum time delay of 3 minutes before turning lights off and an adjustable deadband between ON and OFF of a control step. The time delay prevents lights turning ON and OFF when daylight levels are fluctuating. The adjustable deadband between ON and OFF prevents cycling of lights on and off due to the controlled electric lighting being sensed by the photocontrol light sensor.

4. ~~For single or multiple-stepped switching controls with distinct on and off settings for each step, include a manual or automatic means of adjusting the deadband (see definitions) to provide separationsufficient separation (dead-band) between points to prevent cycling. Such a control requires a higher light level to turn lights off than is required to turn the lights on.~~ If the device is placed in calibration mode, the devices shall automatically restore its time delay settings to normal operation programmed time delays after no more than 60 minutes

5. ~~For single or multi-stepped switching controls that incorporate a time delay, include a method to override that delay for setup. The override must automatically return to normal after no more than 60 minutes.~~ Have a setpoint control that easily distinguishes settings to within 10% of full scale adjustment

   This requirement is for the setpoint adjustment on switching controls. A numerical indication (not just a dial with high and low) is required for the method of setting the setpoint for a switching controller. To minimally comply, one would need at least five regularly spaced marks on an adjustment dial. In many cases this requirement will be met with a digital display. This allows the installer to adjust the setpoint of a switching

DRAFT

control under daylight conditions that do not match the desired amount of interior illuminance.

As an example the installer could calibrate the control under daylight conditions that provide only 80% of design illuminance, the installer can then set the control to turn off the lights at a daylight illuminance setpoint that is 25% higher than the current conditions.

Continuously dimming controls do not have a single fixed setpoint that must be calculated and thus do not fall under this requirement.

6. ~~Have a sensitivity adjustment that easily distinguishes settings to within 10% of full scale adjustment.~~The device shall have a light sensor that has a linear response with 5% accuracy over the range of illuminance measured by the light sensor.

   This requirement assures that the control will be able to accurately respond to daylight levels over a wide range of iluminances.

7. ~~The light sensor in a daylight control must exhibit a linear response within 5% for the whole range of illuminance sensitivity. In general, photodiode sensors meet this requirement whereas photoconductive cells do not.~~ The device shall have a light sensor that is physically separated from where calibration adjustments are made, or it shall be capable of being calibrated in a manner that the person initiating calibration is remote from the sensor during calibration to avoid influencing calibration accuracy

   This requirement simplifies photocontrol calibration. In the past, the installer would be shielding the sensor with their body while making calibration adjustments. Also this type of control is easier to re-calibrate when the sensor is located in a very high or inaccessible location.

   Compliance with this requirement can be met in a number of ways: the calibration controls can be remote from the sensor (either wired or wireless controls) or the control can be self-calibrating and thus the control technician does not have to be close to the sensor during control adjustment.

   ~~A stepped switching control device must show the status of lights in the controlled zones by an indicator on the control device.~~

   ~~The control must incorporate an indication device that shows the currently selected step for a switched control or the relative illumination level on the sensor for a continuously dimming control located where a user can easily see the controlled lighting. If the control is part of a networked system with central display, which displays of the status of lights in each controlled zone, and where setpoint adjustments are~~

~~implemented, the standard allows an exception to this indication device requirement.~~

G. Interior Photosensors ~~Device~~

§119(~~f~~g)

Daylighting control systems incorporate a photosensor that measures the amount of light at a reference location. The photosensor provides light level information to the controller so it can decide when to increase or decrease the electric light level.

Photosensor devices must be certified to the Energy Commission as not having mechanical slide covers or other means that allow easy unauthorized adjusting or disabling of the photosensor. In addition, they shall not be combined in a wall mounted occupant-sensing device. (This means that wall-mounted occupant-sensing devices with photosensor controls can be certified as occupant-sensing devices but not interior photosensor devices.)

H. Multi-level Astronomical Time Switch Controls

§119(h)

~~Although skylight requirements are prescriptive (§143(c)), once skylights are installed, there are mandatory automatic controls that must be installed to reduce electric lighting when sufficient daylight is available. Multi-level Astronomical Time Switch Controls or automatic multi-level daylighting controls will meet the mandatory requirements for automatic controls under skylights when the daylit zone is greater than 2,500 sf (§131(c)2). The purpose of these controls is to turn off lights where there is sufficient daylight available. This is done by keeping track of the time since sunrise and amount of time remaining before sunset. Since the control is multi-level, there must be at least two steps (relays) per control zone with independent schedules (i.e. the steps turn on and off at different times).~~

~~When sky conditions are atypical (overly cloudy or overly bright), it may be necessary to manually override the system. This is accomplished by manual switches in the zone that are configured so that lights will revert to OFF within two hours unless the astronomical time switch schedule calls for the lights on (§131(c)2, 131(d)2)).~~

~~To comply with §131(c)2, the power consumption of lights on this control is no greater than 35% at its step of minimum electric light output. The space must have close to the design illuminance when the control has turned off most of the lights. As a result, the astronomical time switch is required to have the capability of offsetting a switching event by as much as 4 hours from sunrise and sunset.~~

~~To assure that the device is configured correctly, the time switch must be able to display, date/time, sunrise and sunset times, and switching times for each step of control. To prevent loss of settings due a temporary loss of power, the schedules must be protected for a loss of power as long as 10 hours. Time zone, longitude and latitude are stored in non-volatile memory.~~

An astronomical time switch control is a time switch designed to control lighting based on sunrise and sunset hours. It automatically adjusts the turning on and off of lights every day of the year, typically using an internal program based on longitude and latitude of installation.

A multi-level astronomical time switch control is required for Exception 3 to §131(c)B, and for §146(a)3G. Exception 3 to §131(c)B allows one to use a multi-level astronomical time switch instead of a photocontrol when the skylight effective aperture is greater than 4%. This amount of skylight glazing rarely occurs except in atria. Similarly, §146(a)3G applies to exempt lighting power that is "for plant growth or maintenance," in general this will be in locations that have large amounts of glazing where the lights can be off for most of the daytime hours. Multi-level astronomical time-switch controls shall meet the following requirements:

1. Contain at least 2 separately programmable steps per zone that reduces illuminance in a relatively uniform manner as specified in §131(b)
2. Have a separate offset control for each step of 1 to 240 minutes
3. Have sunrise and sunset prediction accuracy within +/- 15 minutes and timekeeping accuracy within 5 minutes per year
4. Store astronomical time parameters (used to develop longitude, latitude, time zone) for at least 7 days if power is interrupted
5. Display date/time, sunrise and sunset, and switching times for each step
6. Have an automatic daylight savings time adjustment
7. Have automatic time switch capabilities specified in §119(c)

DRAFT

~~*F. Automatic Multi-level Daylighting Controls*~~

~~*§119(i)*~~

~~Although skylight requirements are prescriptive (§143(c)), once skylights are installed, there are mandatory automatic controls that must be installed to reduce electric lighting when sufficient daylight is available. Automatic multi-level controls are used to comply with the mandatory requirements for automatic daylighting controls when the daylit area under skylights is greater than 2,500sf (§131(c)2). These controls also qualify for a power adjustment factor (PAF) in the daylit area under skylights (§146(a)4E). Automatic multi-level controls must meet all of the requirements for automatic daylighting controls [§119(e)] and the following additional requirements:~~
~~The control has at least two control steps so that electric lighting can be uniformly reduced. One of the control steps will reduce lighting power to between 70% and 50% of full rated power.~~

~~The light sensor is physically separated from where setpoint adjustments are made. This eliminates the problem of the technician obstructing light on the sensor while trying to calibrate the control setpoint.~~

~~The controls for calibration adjustments are "readily accessible" to authorized personnel. This means that the controls are accessible without climbing a ladder or removing obstacles. These controls can be behind a switch plate cover, touch plate cover, or in an electrical box with a lock because they are accessible to authorized personnel (with a key).~~

~~When the control is used under skylights with a daylit area greater than 2,500 ft2 (§131(c)2), the power consumption of lights on this control can be no greater than 35% at its step of minimum electric light output. This can be achieved with a control that automatically turns all of its lights off, or 2/3's of its lights off, in response to high daylight levels. A fluorescent dimming control will usually meet the minimum power requirements. Usually dimming control of HID (High Intensity Discharge) lamps will not be able to meet the power requirements at minimum dimming levels. However, a multi-stage HID switching control can meet these requirements.~~

I. Outdoor Astronomical Time Switch Controls

§119~~(j)~~(i)

§119 addresses devices used in nonresidential indoor lighting, outdoor lighting, and residential lighting. Even though this chapter deals with nonresidential indoor lighting, information on outdoor astronomical time switch controls has been included in this section so as to not omit any subsections of §119 from this discussion.

An outdoor astronomical time switch control is used for compliance with the outdoor lighting Standards. See Chapter 6 for more information about the outdoor lighting Standards.

Section 132(c)2 requires automated multi-level switching of some outdoor lighting areas. This creates the opportunity to have all, half or none of the lights on for different times of day, for different days of the week, while making sure that the lights are off during the day.

Section 119(j) specifies the capabilities of an outdoor astronomical time switch control. The requirements for this control are very similar to the indoor multi-level astronomical control (§119(h)) except this control has a less stringent requirement for the offset from sunrise or sunset. This control is required to have the capability of independently offsetting on or off settings up to 120 minutes from sunrise or sunset.

~~*H. Installation in Accordance with Manufacturer's Instructions*~~

~~*§119(g)*~~

~~If an automatic time switch control device, occupant sensor, automatic daylighting control device, or interior photosensor is installed, it must comply with both items 1 and 2 below.~~

~~1. The device must be installed in accordance with the manufacturer's instructions; and,~~

~~2. Automatic daylighting control devices must be installed so that the device controls only luminaires within the daylit areas, and must have photosensors that are either ceiling mounted or located so that they are accessible only to authorized personnel, and that are located so that they maintain adequate illumination in the area in accordance with the designer's or manufacturer's instructions.~~

~~*I. Certified Ballasts and Luminaires*~~

~~Fluorescent lamp ballasts and luminaires with fluorescent lamp ballasts are regulated by the Appliance Efficiency Regulations. Those certified to the Energy Commission are listed in the efficiency database. See http://www.energy.ca.gov/appliances/appliance/excel_based_files/ballasts/ or call the Energy Hotline at 1-800-772-3300 to obtain more information. All standard wattage four-foot and eight-foot lamp and ballast combinations commonly installed in nonresidential buildings are included in the ballast efficiency database.~~

J. Manual-On Occupant Sensor (Vacancy Sensor)

§119(j)

A manual-on/automatic-off occupant sensor can be used in some limited applications for compliance with the residential lighting Standards [§150(k)]. Because dwelling units of high-rise residential and hotel/motels must comply with the residential lighting Standards, a manual-on occupant sensor may be used in these applications in accordance with the applicable requirements in §150(k).

This type of occupancy sensor is called a vacancy sensor by some manufacturers to clarify that the sensor is used to turn off the lights after a room has been vacated, and does not automatically turn them back on when the room is occupied. Thus, it responds to vacancy by turning the lights off when a room is vacant, but does not respond to occupancy after the lights have been automatically turned off.

A similar device, described as a multi-level manual-on/automatic-off sensor can be used to each a power adjustment factor (PAF) in accordance with §146(a)2D. However, for compliance with §146(a)2D, the device must able to operate the lighting power on at least two separate levels (see §119(e))~~.~~

A residential vacancy sensor used to comply with §150(k) shall be a device, or system (such as an energy management control system) , which meets all of the following requirements:

1. Turns off the lighting automatically within 30 minutes or less after the room has been vacated in response to the absence of occupants in the room
2. Has a visible status signal in accordance with 119(d)
3. Shall not turn of the lighting automatically, except the sensor shall have a grace period of 15 to 30 second to turn on the lighting automatically after the sensor has timed out
4. Shall not have an override switch that disables the occupant sensor
5. Shall not have an override switch that converts the sensor from a manual-on to an automatic-on system.

K. Dimmers

§119(k)

A dimmer can be used in some limited applications for compliance with the residential lighting Standards [§150(k)]. Dimming controls used in conjunction with dimmable lighting systems can also be used for compliance with the nonresidential lighting Standards, including multi-level lighting control requirements in §131(b), daylight control requirements in §131(c), and for some Power Adjustment Factor's in Table 146-C of the Standards.

Dimmers used to control lighting shall meet the following requirements:

1. Be capable of reducing power consumption by a minimum of 65% when the dimmer is at its lowest light level
2. If the device is a dimmer controlling incandescent or fluorescent lamps, the device shall provide electrical outputs to lamps for reduced flicker operation through the dimming range. This means that the light output has an amplitude modulation of less than 30% for frequencies less than 200 Hz, and without causing premature lamp failure
3. Be listed by a rating lab recognized by the International Code Council (ICC) as being in compliance with Underwriters Laboratories Standards
4. If the device is a wall box dimmer designed to be used in a three or more-way circuit with non-dimmable switches, the level set by the dimmer shall not be overridden by any of the switches in the circuit. The dimmer and all of the switches in the circuit shall have the capability of turning lighting OFF if it is ON, and turning lighting ON to the level set by the dimmer if the lighting is OFF. Any wall box dimmer that is connected to a system with and emergency override function shall be controlled by the emergency override
5. If the device is a stepped dimmer, shall include an OFF position to turn lights completely off.

L. Track Lighting Integral Current Limiter

§119(l)

The use of a track lighting integral current limiter is one of the options provided in §130(d)3 for calculating the installed lighting power of a line-voltage track lighting system. A track lighting integral current limiter that has not been certified to the Energy Commission, and also listed on the Directory of Automatic Lighting Control Devices, cannot be installed. The Directory is available from the link below:

http://www.energy.ca.gov/appliances/appliance/excel_based_files/controls/

Another option for calculating the installed lighting power of a line-voltage track lighting system is the use of a supplementary overcurrent protection panel meeting all of the requirements in §130(d)3A(iv). However, a supplementary overcurrent protection panel does not qualify as an integral current limiter.

Additionally, a field assembly of components does not qualify as an integral current limiter. The integral current limiter must be integrated into the track lighting "fixture" at the factory, and must comply with all of the following requirements:

1. Be designed so that the integral current limiter housing is permanently attached to the track so that the track will be irreparably damaged if the integral current limiter housing were to be removed after installation into the track. Note that it is the current limiter housing that must be permanently attached to the track, and not the current limiter itself, because the current limiter must be replaceable in the event that it fails.
2. Have the volt-ampere (VA) rating of the current limiter clearly marked on the circuit breaker visible for the building officials' field inspection without opening coverplates, fixtures, or panels, and also on a permanent factor-installed label inside the wiring compartment. Note that this requires two labels, one that can be viewed from the outside of the assembled unit, and one that is permanently attached to the housing base for a permanent reference when the coverplate has been removed for maintenance.
3. Employ tamper resistant fasteners for the cover to the wiring compartment
4. Have a conspicuous permanent factory installed label affixed to the inside of the wiring compartment warning against removing, tampering with, rewiring, or bypassing the device. Electricians are required to replace the current limiter with one that has the same or lower rating.

M. High Efficacy LED Light Sources

§119(m)

The low-rise residential lighting Standards require the classification of high efficacy and low efficacy luminaires. Some areas of high-rise residential and hotel/motel buildings are required to comply with the low-rise residential lighting Standards.

The nonresidential lighting standards do not require light sources to be classified as high efficacy. Rather, the nonresidential lighting Standards require the input wattage to be determined according to §130(d).

See Section 5.2.1.4 for more information about the application of high efficacy luminaires.

There are requirements in §150(k)(1 and 2) for luminaires to qualify as high efficacy luminaires. Most high efficacy luminaires are not required to be certified to the Energy Commission to be classified as high efficacy. Only LED luminaires,

or LED light engines are required to be certified to the Energy Commission to be classified as high efficacy.

To qualify as high efficacy for compliance with 150(k) a high efficacy LED luminaire, or LED light engine with integral heat sink shall meet the minimum efficacy requirements in Table 150-C of the Standards, and luminaire power shall be determined as specified by 130(d)5. LED lighting that has not been certified to the Energy Commission as high efficacy in accordance with §119(m) shall be classified as low efficacy for compliance with the Standards. See Section 6.2.9 of the Residential Compliance Manual for additional information about certifying LED lighting systems as high efficacy.

N. Ballast for Residential Recessed Luminaires

§119(n)

To qualify as high efficacy, a ballast for residential recessed luminaires must be certified to the Energy Commission as complying with h §119(n). Some areas of high-rise residential and hotel/motel buildings are required to comply with the residential lighting Standards. See Section 5.2.1.4 for more information about the application of high efficacy luminaires.

To qualify as high efficacy for compliance with 150(k), any ballast in a residential recessed luminaire shall meet all of the following conditions:

1. Be rated by the ballast manufacturer to have a minimum rated life of 30,000 hours when operated at or below a specified maximum case temperature. This maximum ballast case temperature specified by the ballast manufacturer shall not be exceeded when tested in accordance to UL 1598 section 19:15
2. Have a ballast factor of not less than 0.90 for non-dimming ballast, and a ballast factor of not less than 0.85 for dimming ballasts.

O. Dimmable Florescent Ballasts for Power Adjustment Factor

§119(o)

To qualify for the Power Adjustment Factor (PAF) in 146(a)2 and Table 146-C, and when dimming ballasts are required to qualify for the PAF in accordance with Table 146-C, ballasts for T5 and T8 linear fluorescent lamps shall be electronic, dimmable, and shall meet the minimum Relative System Efficiency (RSE) in Table 146-D. There are also opportunities to qualify for a PAF using multi-level switching of non-dimmable ballasts.

Ballasts that are not certified to the Energy Commission and listed on the Directory of Automatic Lighting Control Devices cannot be used to qualify for the PAF whenever a dimmable ballast is required to qualify for the PAF in accordance with Table 146-D. The Directory is available from the link below:

http://www.energy.ca.gov/appliances/appliance/excel_based_files/controls/

5.2.1.3 ~~Area Controls~~Mandatory Lighting Controls

§131~~(a)~~

The simplest way to improve lighting efficiency is to turn off the lights when they are not in use. All lighting systems must have switching or control capabilities to allow lights to be turned off when they are not needed. In addition, it is desirable to reduce light output and power consumption when full light output is not needed. These mandatory requirements apply to all nonresidential, high rise residential and hotel/motel buildings for both conditioned and unconditioned interior spaces. The mandatory lighting control requirements in §131 can be summarized as follows:

1. Light switches (or other control) in each room [§131(a)]
2. Multi-level control for lighting systems > 0.8 W/sf [§131(b)]
3. Daylighting controls [§131(c)]
    - Separate switches when skylit or primary sidelit zone > 250 ft^2.
    - Automatic multi-level daylighting controls when skylit or primary sidelit zone > 2,500 ft^2.
    - Controls calibrated so that space always mets or exceeds design footcandles and electric lighting is fully dimmed when daylight is 150% of design illuminance.
4. Automatic shut-off controls – a time sweep with an override switch or occupancy sensor to assure lights are off after business hours. [§131(d)]
5. Display lighting is separately switched. [§131(e)]
6. When the tailored lighting method is used to show compliance, general lighting must be on a separate shut-off control from display lighting [§131(f)]
7. Stores larger than 50,000 sf must have automatic controls to shed 15% of lighting load when an automated demand response signal is received from the local utility.

Detailed descriptions of each of these mandatory control requirements follow. Since there is a substantial discussion of daylighting, Section 5.2.1.5 is dedicated to the daylighting requirements contained in §131(c).

A. ~~Room Switching~~Area Controls for Each Room

§131(a)1

Independent lighting controls are required for each area enclosed by ceiling height partitions. In the simplest case, this means that each room must have its own ~~switching~~switches; gang switching of several rooms is not allowed~~.~~ This allows the lighting in each room to be controlled separately by the room's occupants. ~~The switch may be manually operated or automatically controlled by an occupant-sensing device that meets the requirements of §119 (d)~~.

~~B.~~ Accessibility

§131(a)1~~A & B~~A, B, & C

The lighting switch required in §131(a)1 may be manually operated or automatically controlled by an occupant-sensing device that meets the applicable requirements of §119. However, automatic controls must still allow an occupant to manually turn off all of the lights in a room. All manually operated switching devices must be located so that personnel can see the controlled area when operating the switch(es). When not located within view of the lights or areas, the switch shall be annunciated to indicate the status of the lights (on or

off). Annunciated is defined in §101 as indicating the on, off, or other status of a load through the use of a visual signaling device.

~~C.~~ Security or Emergency

§131(a) Exception No. 1

Lighting in areas within a building that must be continuously illuminated for reasons of building security or emergency egress are exempt from the switching requirements for a maximum of 0.3 W/ft^2 along the path of egress. These lights must be installed in areas designated as security or emergency egress areas on the plans, and must be controlled by switches accessible only to authorized personnel. The remaining lighting in the area, however, is still subject to the area switching requirements.

~~D.~~ Public Areas

§131(a) Exception No. 2

In public areas, such as building lobbies, concourses, etc., the switches may be located in areas accessible only to authorized personnel.

~~E.~~ Other Devices

§131(a)2

If the room switching operates in conjunction with any other kind of lighting control device, there are two other requirements: 1) the other control device must allow the room switching to ~~override its action~~ manually turn the lights off in each area enclosed by ceiling-height partitions, and 2) if the other control device is automatic, it must automatically reset to its normal operation mode without any further action.

For example, if there is an automatic control system that sweeps all the lights off in a group of offices at a certain hour to comply with the automatic shut-off requirements in §131(d), the room switch in any individual office must be able to override the sweep and turn the office's lights back on according to §131(a)2. The sweep must be set up to occur every two hours as the override is not allowed to last more than 2 hours. The next time the automatic control sweeps the lights off, however, the override for that individual office must not remain in effect but must return to automatic mode and shut the lights off. This same type of manual switch is also required when using a manually operated override switch in conjunction with an automatic time switch control device when used to comply with §131(d),

Note that an occupancy control or daylighting control (photocontrol) could be wired in series with a standard light switch and be in compliance with this requirement. The switch does not affect the operational mode of the automatic system.

Example 5-1~~1~~
Question
A 5,000 square foot building will be equipped with an automatic control device to shut off the lights, and in compliance with §131(b) it has multi-level controls. How are the local switches supposed to respond when an occupant wishes to turn on lights after the lights are shut off?

Answer
The local switch (as specified in §131(a)) must allow the occupant to override the shut off and turn on the lights in their area (§131(a)2.A.). Following the override, the automatic function of the shut-off must resume, so that when the automatic control sweeps the lights off, these lights will be shut off unless the local switch again overrides the shut-off (§131(a)2.B.).

Example 5-2
Question
The card access system of a proposed building will automatically turn on the lobby and corridor lights when activated by someone entering the building after hours. In addition, the lobby and corridor lights are on an automatic time switch control. Are manual switches required for the lobby and corridor?
Answer
Yes. The manual switch is still required under the area control mandatory measure requirement. Furthermore, the manual switch must be able to turn off the lights when either the automatic time switch control or card access system has turned them on. The automatic devices must be automatically reset.

~~F~~B. Multi-Level Switching

§131(b)

Most areas in buildings must be controlled so that the connected general lighting load may be reduced ~~by at least 50%~~ while maintaining reasonably uniform illumination. The intent of this requirement is to achieve the lighting power reduction without losing use of any part of the space. Typically, the multi-level switching will give the occupants the option of selecting all, approximately one-third to one-half, or none of the connected lighting load any time they occupy the area. However, there may be occasions when lighting power has already been automatically reduced through the use of automatic daylighting controls, an energy management controls system, or demand responsive lighting controls. Even when such controls have already ~~automatically reduced~~automatically reduced the lighting power, the occupant should still have the opportunity to turn the lights completely off while occupying the room.

A multi-level lighting control is a lighting control that reduces lighting power by either continuous dimming, stepped dimming, or stepped switching while maintaining a reasonably uniform level of illuminance throughout the area controlled. Multilevel controls shall have at least one control step that is between 30% and 70% of design lighting power. ~~and at least one step of minimum light output operating at less than 35% of full rated lighting system power (this control step could be completely off, creating a bi-level control).~~
A reasonably uniform level of illuminance in an area shall be achieved by any of the following:

1. Using dimming controls (stepped or continuous dimming) to dim all lamps or luminaires will allow a range of ~~0~~30% to 100% of the connected general lighting load,
2. Switching the middle lamps of three lamp luminaires independently of outer lamps will allow the occupant 0%, 33%, 66% and 100% of the connected general lighting load,

3. Separately switching "on" alternate rows of luminaires will allow 0%, around 50%, and 100% of the connected general lighting load,
4. Separately switching "on" every other luminaire in each row (checkerboard) will allow 0%, around 50%, and 100% of the connected general lighting load, or
5. Separately switching lamps in each luminaire. Depending on the number of lamps in the luminaire, will be similar to numbers 2 or 4, above.

Multi-level switching is not required when:

1. The lighting power density is less than 0.8 W/ft2,
2. The area has only one ~~light source (luminaire)~~ luminaire with no more than two lamps in the luminaire, A single luminaire with more than two lamps must comply with the multi-level switching requirements.
3. The area is less than 100 square feet, or
4. The area is a corridor. Even though not required, multi-level switching in corridors is not prohibited by the Standards.

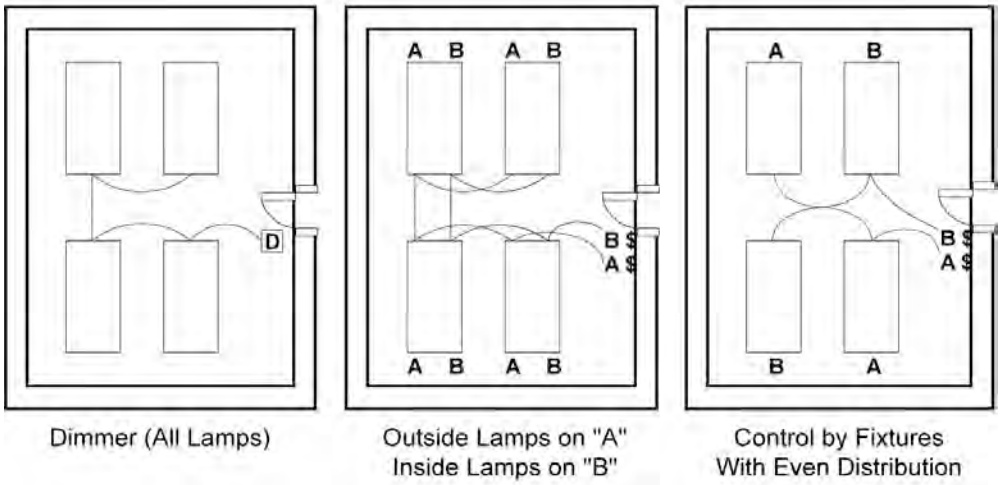

Figure 5-1~~1~~ – Multi-Level Switching Options

~~G~~C. Shut-Off Controls

§131(d)

In addition to the manual controls installed to comply with §131(a &b). t~~T~~he Standards require that lights on each floor of a building be controlled by a separate automatic control device (or control point with multiple point control systems).

The areas exempted from the automatic shut-off requirements of §131(d) are:

1. Areas that must be continuously lit~~, such as hotel lobbies and~~ 24-hour, 365 day per year (≥ 8760 hours per year) such as hotel lobbies ~~and grocery stores~~ where lights are never turned off.

2. ~~Security or emergency egress lighting that must be continuously on, provided it does not exceed 0.5 W/ft^2 and the area is controlled by switches accessible only to authorized personnel (the security or egress area must be documented on the plans).~~Lighting in corridors, dwelling units of high-rise residential buildings, dwelling units of hotel/motels, and parking garages.
3. ~~Corridors, guest rooms, and lodging quarters of high-rise residential buildings or hotel/motels.~~Up to 0.3 W/ft^2 of lighting in any area within a building that must be continuously illuminated for reasons of building security or emergency egress provided that the area is designated a security or emergency egress area on the plans and specifications submitted to the enforcement agency under Section 10-103(2)(2) of Title 24, Part 1. Note that the path of egress must be shown on the building plans to take this exception..

The shut-off control need not be a single control, but may include automatic time switches, occupancy sensors, or other automatic controls that are capable of automatically shutting off the lighting according to a schedule or based on sensing occupancy.(see Sections 5.2.1.2 ~~A. Automatic Time Switches and B. Occupant-Sensors~~ for information about certification requirements for these automatic controls).

When an occupant-sensing device is used to meet the automatic shut-off requirement, it must be installed in accordance with manufacturer's instructions with regard to placement of the sensors [§130(a)].

Automatic time switches with programmable solid state perpetual calendar control devices can also be used to meet the shut-off requirement provided they are certified to the Energy Commission according to the applicable provision of §119. These devices are typically available with multiple channels of control, and may also be used to meet the mechanical system automatic time switch control requirements.

DRAFT

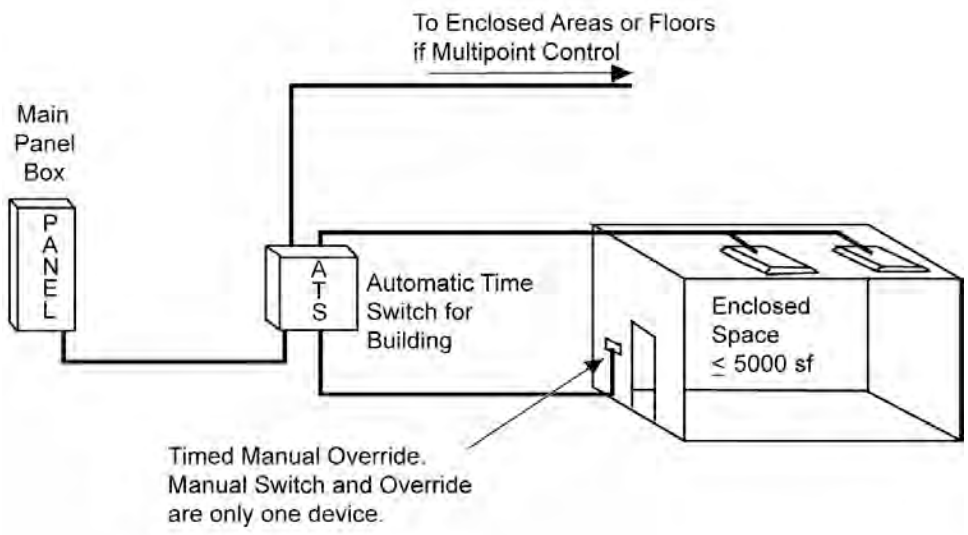

Figure 5-2 — Timed Manual Override

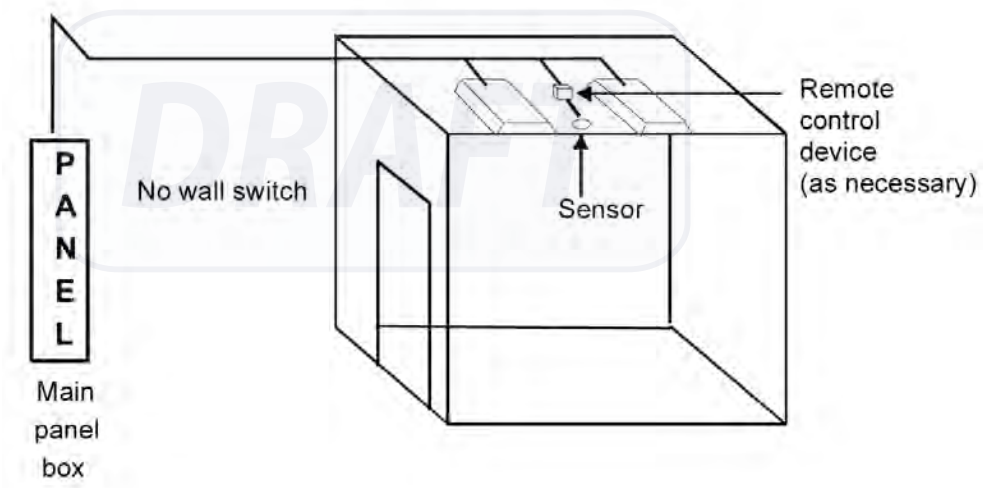

Figure 5-3 — Occupant-Sensing Device Shut-off

~~H.~~ Automatic Control Device

§131(d)2

Occupant sensors will automatically keep lights operating as long as occupants are in an area. When occupant sensors are used to comply with §131(d), an override switching device is not required. However, if an automatic time switch is used to comply with §131(d), such a time switch does not have the ability to sense that occupants may be present after the time switch has been programmed to automatically shut off the lights. Therefore, if an automatic

time switch control device is installed to comply with 131(d)1, it shall incorporate an override switching device that meets all of the following requirements:

1. Is readily accessible
2. Is located so that a person using the device can see the lights or the area controlled by that switch, or so that the area being lit is annunciated; and
3. Is manually operated; and
4. Allows the lighting to remain on for no more that two hours when an override is initiated. However, where a captive-key override is utilized in malls, auditoriums, single tenant retail spaces, industrial facilities, and arenas, the override time may exceed two hours.
5. Controls an area enclosed by ceiling height partitions not exceeding 5,000 ft^2. However, in malls, auditoriums, single tenant retail spaces, industrial facilities, convention centers and arenas, the area controlled may not exceed 20,000 ft^2.

~~I.~~ Automatic Time Switch Control Device

§131(d)3

If an automatic time switch control device is used for shut-off control, it must be certified to the Energy Commission according to the applicable provision of §119, and incorporate an automatic holiday shut-off that turns off all lighting loads for at least 24 hours, and then resumes normal scheduled operation. However, holiday scheduling is not required for: retail stores and associated malls, restaurants, grocery stores, churches, and theaters.

~~J.~~ Required Use of Occupancy Sensors

§131(d)4

For most spaces, the Standards allow several different types automatic controls to be used for compliance with §131(d). However, the following spaces are required to use an occupant sensor for compliance with §131(d):

1. Offices 250 ft^2 or smaller
2. Multipurpose rooms < 1000 ft^2
3. Classrooms of any size
4. Conference rooms of any size.

In addition, when using occupant sensors, controls shall be provided that allow the lights to be manually shut off in accordance with §131(a) regardless of the sensor status.

~~*Local Override*~~

~~If an automatic time switch control device is used for shut off, the control must be designed with override switching devices. The override switching devices shall:~~

~~*Controls an area enclosed by ceiling height partitions not exceeding 5,000 ft2 on a single floor. For malls and arcades, auditoriums, single tenant retail spaces, industrial facilities, and arenas, the area controlled may not exceed 20,000 ft2.*~~

~~*Be readily accessible.*~~

~~*Be manually operated.*~~

~~*Allow the operator to see the lights or area controlled or be annunciated.*~~

~~*Provide an override for not more than 2 hours. In malls and arcades, auditoriums, single tenant retail spaces, industrial facilities, and arenas where captive-key override is utilized, a 2-hour override limit is not required.*~~

~~*K.*~~*D Display Lighting*

§131(e)

~~Display lighting~~Lighting for floor and wall displays, window displays, and case displays shall each be separately switched on circuits that are 20 amps or less. ~~Display lighting for wall display, floor display, and lighting external to display cases and cabinets may be on the same circuit so long as each circuit does not exceed 20 amps. Ornamental/special effect lighting, lighting that is internal to display cases and cabinets, and general lighting must each be separately switched and not exceed 20 amps per circuit.~~

Display lighting circuits rated up to 20 amps may use local subpanels to separate the final circuits from a single higher rated circuit. These subpanels should use switch-rated breakers (rated to comply to UL-SWD), and the subpanel location must be so that the controlled lighting is visible from the switch. These switches must be located where a user would reasonably expect to find a lighting control for the display lighting, and must be readily accessible (they can not be locked).

For example, a benefit of general lighting being on a separate switch is that it can be operated without having to turn on the display lighting (as, for example, when the cleaning crew is working at night and there is no need for the displays to be lit). Additionally, some retailers prefer to leave window displays on part of the night. The retailer must not be required to keep all of the other display lighting on when only one type of display lighting is required.

~~*L*~~*E. Automatic Controls Required for Tailored Method*

§131(f)

In addition to general lighting and display lighting, the Standards have provisions for allowing ornamental and special effects lighting, ornamental chandeliers and sconces, and specialized task lighting. When the Tailored Method in §146 is used for calculation allowed indoor lighting power density, the general lighting shall be controlled separately from the display, ornamental, and display case lighting.

~~*M*~~*F. Demand Responsive Lighting Controls*

§131(g)

In retail buildings with sales floor areas > 50,000 ft^2, demand responsive automatic lighting controls that uniformly reduce lighting power consumption by a 15% or more shall be installed. However, buildings where more than 50% of the lighting power is controlled by daylighting controls are not required to have demand responsive automatic lighting controls ~~installed~~.

Demand responsive controls are connected to the local utility's demand response system. This system sends a signal that indicates the cost of power or a request to shed lighting according ot utility developed protocols. The building operator programs the lighting controls to automatically reduce lighting power consumption in response to these signals. It is the responsibility of the designer to specify controls that are compatible with the local utility's demand response protocol. These controls can save significant amounts of money for the stores who are using the capability of these controls.

5.2.1.4 Dwelling Unit Mandatory Requirements

Lighting in dwelling units of high rise residential or hotel/motel occupancies must comply with the mandatory requirement in §150 of the standards. The main requirements can be summarized as a requirement for high efficacy luminaires and for manual controls.

A. High Efficacy Lighting & Controls

§150(k).

The classification of luminaires as high efficacy or low efficacy is required for compliance with the residential lighting Standards. However, for compliance with the nonresidential lighting Standards, the distinction between high efficacy and low efficacy luminaires is not considered.

However, for some mixed use buildings, such as high rise residential, hotels, and motels, the common areas must comply with the nonresidential lighting Standards, while dwelling units must comply with the residential lighting Standards. Therefore, in these dwelling units, the classification of luminaires as high or low efficacy is required for compliance with the Standards. See section 5.2.4.1 for more information about high rise residential dwelling units and hotel/motel guest rooms.

In most cases, low efficacy lighting installed inside the dwelling units, when combined with either a dimmer or an occupancy sensor, can be substituted for high efficacy lighting.

Additionally, lighting that is permanently attached to the outside of high rise residential buildings, hotels, and motels, building, and is separately switched from the inside of a dwelling unit or guest room must also comply with the residential lighting Standards. These requirements include that such luminaires be either high efficacy, or if low efficacy, they must be controlled by a combination of two lighting controls as follows:

1. A motions sensor, in addition to:
2. A photo control, astronomical time clock, or an Energy management control system (EMCS).

Therefore, in these dwelling units, the classification of outdoor luminaires as high or low efficacy is required for compliance with the Standards. See §150(k)13.

High efficacy luminaires are defined by §150(k). See Section 6.2.1 of the Residential Compliance Manual for additional information about high efficacy luminaires.

~~5.2.1.3 High Rise Residential Living Quarters and Hotel/Motel Guest Rooms - General~~

~~§130(b), §150(k)~~
~~Chapter 6, Residential Manual~~

~~The *Standards* require that lighting in high-rise residential dwelling units and in hotel/motel guest rooms comply with all applicable lighting requirements of the low-rise residential standards. For hotel/motel guest rooms, up to 10% of the rooms (this refers to the number of the rooms, including suites and not the areas of the guestrooms) are exempt from the low-rise residential lighting requirements.~~

~~The low-rise residential standards changed considerably with the 2005 update. High efficacy luminaires are required for almost all rooms in the dwelling unit or hotel guest room. Exceptions are made in some rooms if the fixtures are on a separate circuit or are controlled by occupancy switches or dimmers. The specific language for these requirements can be found in §150(k) of the 2008 standards.~~

~~The dwelling unit requirements apply only to permanently installed luminaires, i.e., luminaires that are part of the building, as opposed to portable luminaires such as torchieres or table lamps that are provided by the occupant. Permanently installed luminaires include ceiling fixtures, chandeliers, vanity lamps, wall sconces and any other type of luminaire that is a permanent part of the house.~~

~~Refer to Chapter 5 of the Residential Compliance Manual for additional information about the residential lighting requirements.~~

~~The requirements are summarized as follows:~~
~~Kitchens. At least half the installed wattage of luminaires in kitchens shall be high efficacy and the ones that are not must be switched separately. Wattage shall be determined according to § 130 (c).~~

~~Lighting in Bathrooms, Laundry Rooms and Utility Rooms. All luminaires shall either be high efficacy or shall be controlled by a manual-on occupant sensor.~~

~~Other Rooms (other than Kitchens, Bathrooms, Laundry Rooms and Utility Rooms). All luminaires shall either be high efficacy or shall be controlled by a manual-on occupant sensor or dimmer.~~
~~Outdoor Lighting. All luminaires mounted to the outside of the nonresidential buildings must meet the requirements of §147 of the Standards. See Chapter 6, Outdoor Lighting and Signs, of this Manual for more details.~~
~~Common Areas of Low-Ride Multifamily Buildings. All luminaires in the common areas of low-rise multifamily buildings shall either be high efficacy or shall be controlled by an occupant sensor. All high efficacy luminaires must meet the requirements of §150(k). See Section 5.13 of this chapter for more details.~~
~~All High Rise Residential Living Quarters lighting need to comply with §150(k)~~
~~Hotel/Motel garages must meet the requirements of the Area Category Method of §146, Table 146-C.~~

5.2.1.5 Mandatory Daylighting Controls

§131(c)

A substantial fraction of electric lighting energy can be saved if ~~lights are turned off whenever there is sufficient~~electric lighting power is reduced in response daylight. §131(c) ~~has~~ contains a series of mandatory requirements for the control of electric lighting in daylit areas. ~~These control requirements range from separate manual switching to automatic switching of lights near windows and under to skylights when the daylit area is greater than 250 ft^2.~~

~~There are mandatory control requirements for prescriptive measures such as the requirement for automatic controls when the daylit area under skylights or in the primary sidelit daylit area near windows is greater than 2,500 ft^2.~~
The mandatory daylighting requirements can be summarized as follows:

- Daylit areas are specified on the building plans [§131(c)2]
- When the total primary sidelit and skylit daylight areas in a room are greater than 250 ft^2, the general lighting in these daylit areas are separately circuited and controlled.[§131(c)2A]
- When the total primary sidelit and skylit daylight areas in a room are greater than 2,500 ft^2, automatic daylighting controls control the general lighting in these daylit areas. [§131(c)2B&C]
- Automatic daylighting controls are multi-level (including dimming) and assure that illuminance in the controlled area does not fall below the design illuminance and that the controlled lighting is at minimum power when the illuminance from daylight is 150% of design illuminance. [§131(c)2D]

A key exception the automatic daylight controls requirements is that these controls are not required if there is not enough daylight entering through windows or skylights. Either they are too small or not transmitting enough (low effective aperture) or that sunlight is significantly blocked by nearby buildings.

There are a number of terms that will be described briefly here in this overview. However, a detailed description of each of these terms and the exceptions is described in the following subsections

General lighting [§101(b)]. The requirements above require general lighting to be controlled in daylit areas. General lighting is lighting that is meant to provide ambient and circulation lighting. It is **not** task lighting, or display lighting. Typical general lighting fixture types include but are not limited to: essentially all fluorescent fixtures outside of cove lighting, recessed cans, high bay and low bay fixtures and just about any fixture that cannot be aimed.

Automatic daylighting controls. Automatic daylighting controls, sense daylight and reduce electric lighting so that the general lighting illumination served by the controlled lighting is never less than the design illumination. The design illumination is the light level in the space from the general lighting at full output but with no daylight. The daylighting controls are multi-level so there is at least one switching control step or one point along the continuous dimming curve where the controlled lighting system is consuming between 50% and 70% of rated power. These controls are adjusted so that the power draw of the controlled lighting system is reduced to 35% or less or rated power when the daylight contribution to the space is greater than 150% of the design illuminance. See Section 5.2.1.2 for a description of the required manufacturer's certification of automatic daylighting controls [§119(e)].

Daylight areas. Automatic daylighting control systems save more energy per fixture and are less likely to be disabled if the controlled fixtures are close to the source of daylight. If an automatic daylighting control controls lights that are too far away from the daylight source, if the control is configured correctly, it will rarely turn off the electric lights and not yield the benefit of frequently turning off the lights near windows and skylights.

Daylight areas are not to be double counted thus overlapping areas are not double counted. The primary sidelit daylight area is counted first, then the skylit daylight area is counted and finally the secondary sidelit area is counted last.

Primary sidelit daylight area [§131(c)1B]. The primary sidelit daylight area is the unobstructed area next to perimeter windows that extends on two feet on either side of the window in a direction parallel to the window and one window head height perpendicular to the window. The extent of the primary sidelit daylight area is also limited by any permanent vertical obstructions that are higher than 5 feet tall. The best way to understand these extents of the daylight area is to look at figure ___ and figure ___.

Window Head Height. The window head height is the distance from the floor to the top of the highest window. If the window head height varies, the depth of the sidelit areas also vary.

Secondary sidelit daylight area [§131(c)1C] . There are no mandatory lighting control requirements associated with the secondary sidelit daylight area but lighting control credits are available for controlling general lighting in this area with automatic daylighting controls.

The secondary sidelit daylight area is the unobstructed area which extends in a direction perpendicular to the windows starting at one window head height and ending at two window head heights. In the direction parallel to the window, the secondary sidelit area extends on two feet of either side of the window. The extent of the primary sidelit daylight area is also limited by any permanent vertical obstructions that are higher than 5 feet tall. See figure ___ and figure ____.

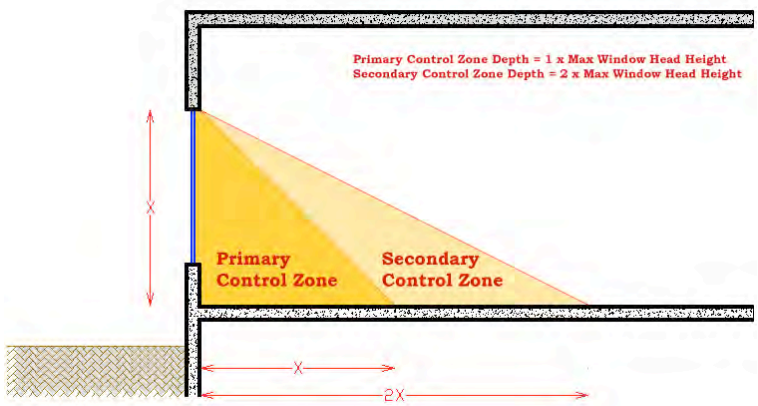

Figure 5-4-: Side view of Primary and Secondary Sidelit Area

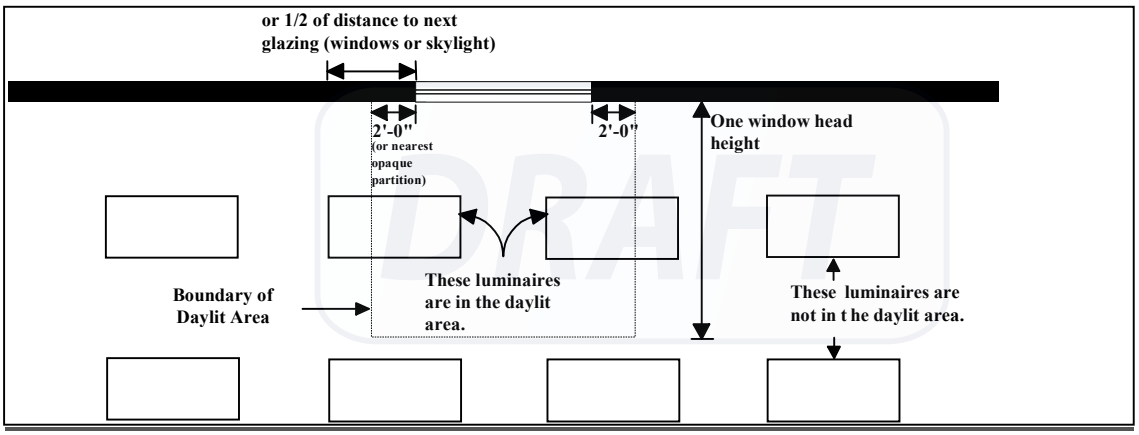

Figure 5-5-: Primary Sidelit Area Plan view

Skylit daylight area [§131(c)1D]. When there are no obstructions, the extent of the skylit daylight area is the area that is horizontally (plan view)_ within 70% of the floor to ceiling height of the edges of the skylight opening in the ceiling. Permanent partitions or racks will obstruct the edge of the skylit area if they are further away from the edge of the skylight than 70% of the distance between the top of the partition and the ceiling (gap). If the partition is closer to the edge of the skylight that 70% of the gap height, enough light makes it over the

partition and the skylit area is not reduced. This concept is easiest to understand by looking at Figure ___ and Figure ___.

(All of the figures still need to be re-numbered before such information can be put into the narrative.)

Only one of the following two figures will be put into the final document. The decision has not yet been made.

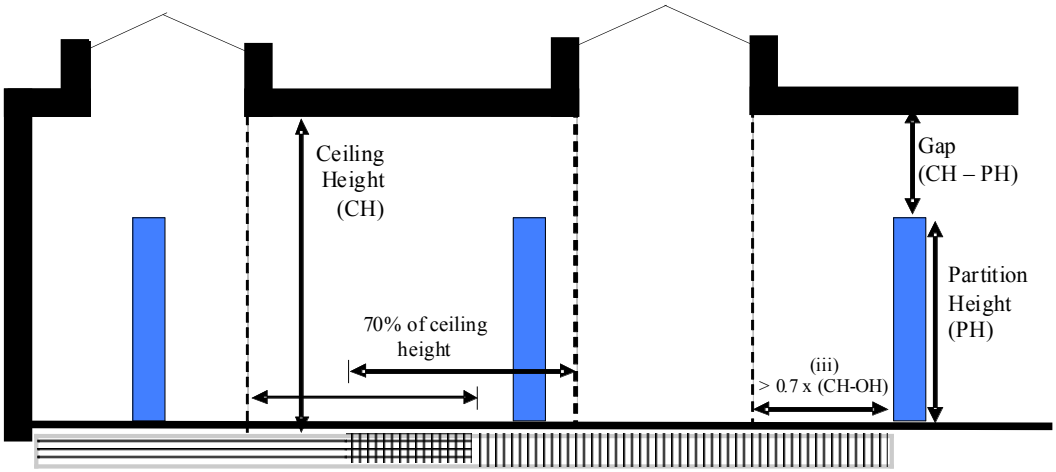

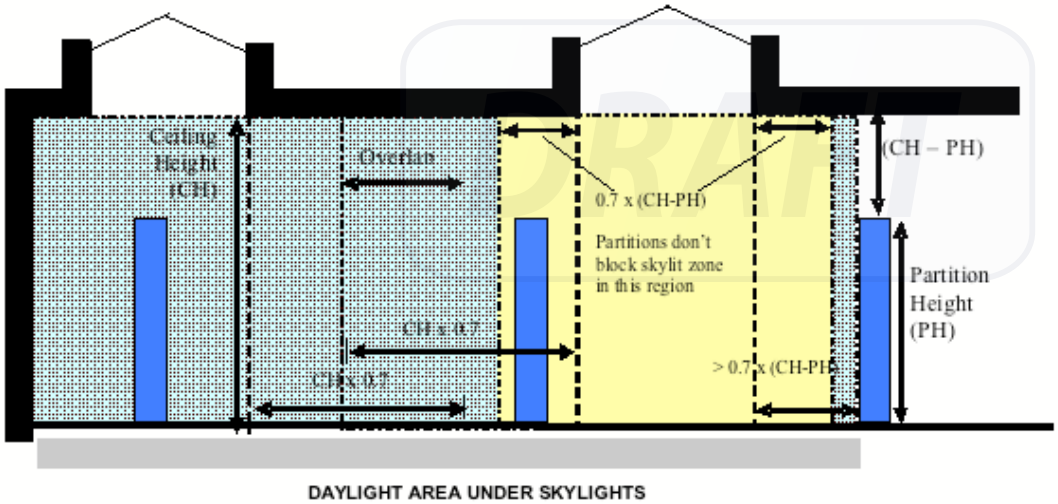

Figure 5-6: Elevation View of Daylit Area under Skylight with partitions

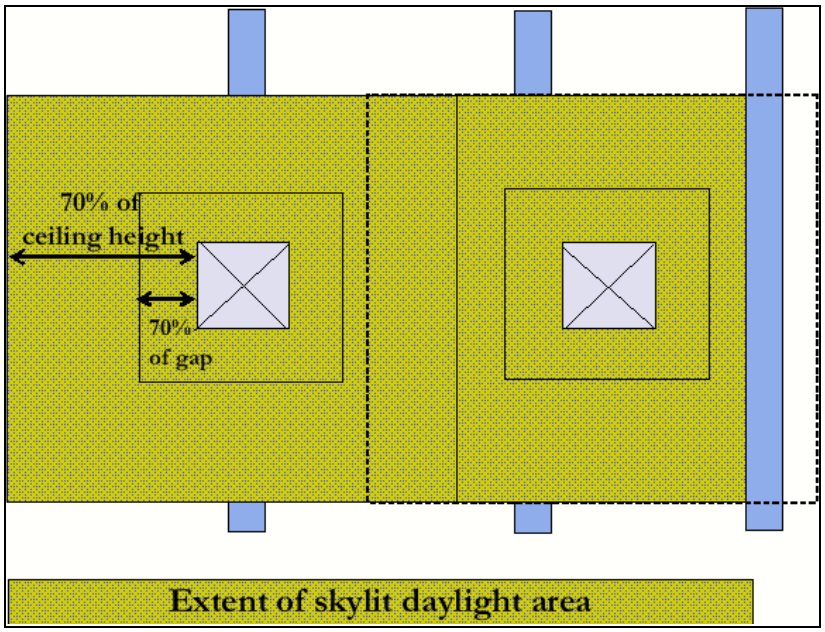

Figure 5-7: Plan View of Daylit Area under Skylight with partitions

Exceptions to Mandatory Automatic Daylighting Controls for Sidelit Spaces

Small primary sidelit daylight areas. Automatic daylighting controls are required only if the total area of primary sidelit areas in room exceed 2,500 sf. [Exception 1 to §131(c)2C] Rooms with smaller primary sidelit areas are not required to install automatic daylighting controls. However, one can obtain lighting control credits for daylighting controls in primary sidelit daylight areas less than 2,500 sf. [§146(a)2E]. These lighting control credits can be exchanged for more installed lighting power. See section ___ here for more details about lighting control credits

Primary Sidelit Effective Aperture Less than 10%. Automatic daylighting controls are not required if the windows do not transmit enough light into the primary sidelit area. [Exception 2 to §131(c)2C] The primary sidelit effective aperture as defined by equation 146 – A and reproduced below. [§146(a)2Ei]

EQUATION 146-A – EFFECTIVE APERTURE OF THE PRIMARY SIDELIT AREA

$$\text{Primary Sidelit Effective Aperture} = \frac{\sum \text{Window Area x VT}}{\text{Primary Sidelit Daylit Area}}$$

Window Area = rough opening of windows adjacent to the sidelit area, ft²
Window VT = visible light transmittance of window as reported by the window manufacturer, no units

Existing structures obstruct daylight. Automatic daylighting controls are not required in primary sidelit areas where existing surrounding structures are tall

enough to obstruct significant daylight from reaching the windows. [Exception 3 to §131(c)2C] The exception is applicable for those windows, where the height of buildings facing the windows will be substantially shaded during daytime hours. This occurs when the height of buildings facing the windows is at least twice as high above the floor level of the windows as the adjacent buildings' horizontal distance away from the window(s).

Parking Garages. Parking garages are not required to install the automatic daylighting control devices. Exception 4 to §131(c)2C]

Exceptions to Mandatory Automatic Daylighting Controls for Skylit Spaces

~~The Standards define three different types of daylight areas: skylit daylight area, primary sidelit daylight area, and secondary sidelit daylight area. The primary sidelit and skylight daylit areas define where manual daylight switching is required when automatic daylight switching is not used. Secondary sidelit daylit area is only used when taking compliance credit for qualifying automatic daylight controls for lighting serving this space.~~

~~Automatic daylighting controls are a mandatory requirement for all general lighting in the daylit area of all skylit areas, conditioned or unconditioned, except where daylit area is less than 2,500 ft^2 per §131(c)2.B.~~

~~Although prescriptive compliance requires skylights in large spaces [§143(c)], this requirement can be traded-off against other building features using the performance method.~~
~~If skylights are installed to meet prescriptively requirements or where skylights with automatic daylighting controls are modeled for compliance under the performance method, there are mandatory automatic daylighting control requirements that must be met to assure energy savings are realized. In those spaces where skylights are not required but are installed for other reasons and the daylit areas are less than 2,500 square feet, there are no mandatory control requirements for automatic daylighting controls; however, if automatic daylighting controls are installed in the space, those controls must meet the mandatory requirements of §119, §130, and §132.~~

~~If the daylit area under skylights or in the primary sidelit daylit area is greater than 2,500 square feet, the automatic daylighting controls must be installed.~~

~~Automatic daylight control devices include stepped dimming, continuous dimming, and stepped switching devices. For definitions of these terms see §101 of the standards or the definitions in the Reference Joint Appendix JA1.~~

~~A. The "Daylit Area" near Windows and under Skylights~~

A. Definition of the Daylit Areas

§131(c)1A

The Standards define three different types of daylight areas: skylit daylight area, primary sidelit daylight area, and secondary sidelit daylight area.

The primary sidelit and skylight daylit areas define where manual daylight switching is required when automatic daylight switching is not used. The secondary sidelit daylit area is only used when taking lighting controls compliance credit for qualifying automatic daylight controls for lighting in this space.

Automatic daylighting controls are a mandatory requirement for all general lighting in the daylit area of all skylit areas, conditioned or unconditioned, except where daylit area is less than 2,500 ft^2 per §131(c)2.B.

The Standards explicitly define the area under skylights or area near windows that is considered to be daylit (i.e. where daylight is sufficient to provide adequate illumination so that electric lights can be dimmed or switched to a lower power consumption state.)
The Standards do not allow double-counting of daylight areas. The total daylight area shall not double count overlapping areas with any Primary Sidelit Daylight Area, Secondary Sidelit Daylight Area, or Skylit Daylight Area.

The following definitions are outlined in the Standards Section 131(c) and illustrated below.

B. Daylight Area, Primary Sidelit

§131(c)1B

This area is defined in the Standards in terms of a geometric relationship between the floor area and the width and height of the window providing daylighting to that floor area. The Primary Sidelit Daylit Area is defined as a product of the Sidelit width and the Primary Sidelit depth.

The Primary Sidelit width is the width of the window plus, on each side, the smallest of~~:~~ either
~~i. T~~two feet; or
~~ii. T~~the distance to any five feet or higher permanent vertical obstruction; or half the distance to the next glazing (window or skylight)~~.~~

The Primary Sidelit depth is the horizontal distance perpendicular to the glazing which is the smaller of:

i. One window head height; or
ii. The distance to any five feet or higher permanent vertical obstruction.

Window head height is the vertical distance between the finished floor surface adjacent to the window and the top of the window.

When there are multiple windows serving a space, the Standards do not allow double-counting the daylit zone. In such instances the combined area of all the individual primary sidelit daylit areas from all windows in the space need to be

DRAFT

added up (minus any double-counting of overlapping areas) to get the total Primary Sidelit Daylit Area for the space.

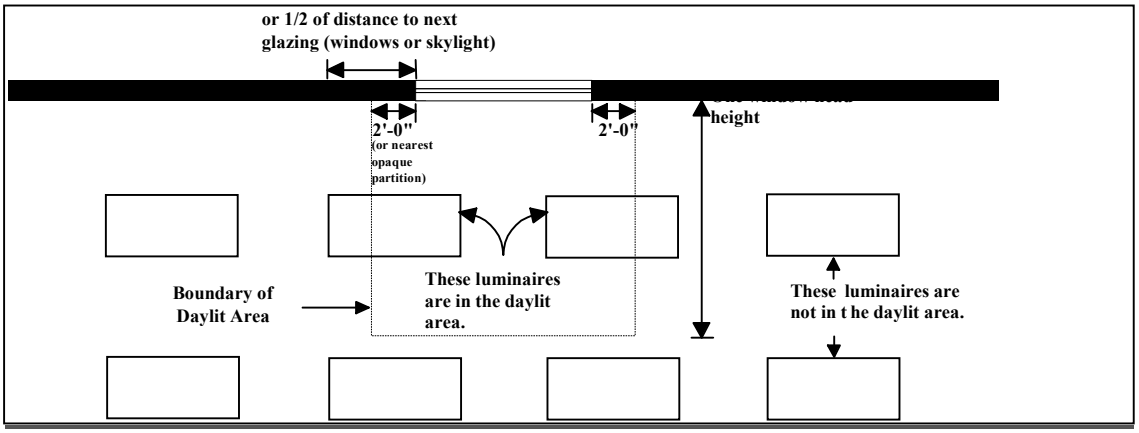

~~*Figure xxFigure 0-6: Primary Sidelit Area Plan view*~~

C. Daylight Area. Secondary Sidelit

§131(c)1C

This area is an extension of the Primary Sidelit Daylit Area deeper into the space perpendicular to the window. The definition of this area is also defined through a geometric relationship between the window dimensions and the floor area.

It is important to note that there cannot be a Secondary Sidelit Daylit Area without a Primary Sidelit Daylit Area. The Secondary Sidelit Daylit Area is defined as the area directly adjacent to the Primary Sidelit Daylit Area with an area that is defined by the product of the Secondary Sidelit width and the Secondary Sidelit depth.

The Secondary Sidelit width is the width of the window plus, on each side, the smallest of either two feet; or the distance to any five feet or higher permanent vertical obstruction; or half the distance to the next glazing (window or skylight)

The Secondary Sidelit depth is the horizontal distance perpendicular to the glazing which begins from one window head height, and ends at the smaller of:

i. Two window head heights;
ii. The distance to any five feet or higher permanent vertical obstruction; or
iii. The distance to any skylit daylight area.

DRAFT

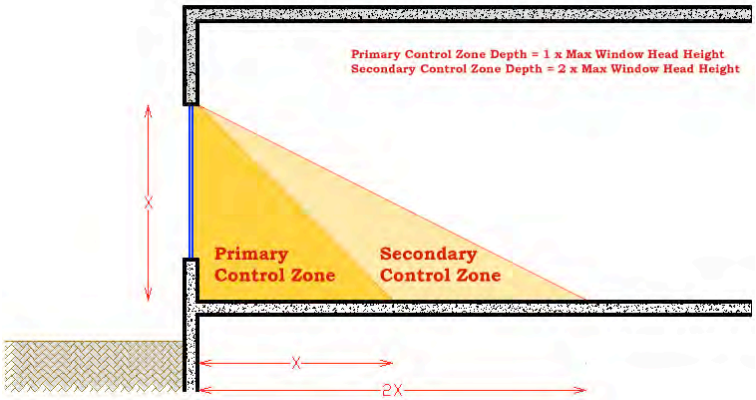

~~*Figure 0-7: Side view of Primary and Secondary Sidelit Area*~~

D. Daylight Area, Skylit

§131(c)1D

The daylit zone under skylights is the "footprint" of the skylight opening with the edge of the daylit area expanding by 70% of the ceiling height from each edge of the skylight footprint outward, unless it impinges upon: the daylit area under another skylight; the daylit zone from vertical glazing; or the light is blocked by a permanent partition that is 5 ft tall or taller depending on the location of such partition as explained later in this section.

In buildings with no partitions, the daylit area under skylights is the footprint of the skylight plus in each direction, 70% of the ceiling height or halfway to the next skylight or window. This is shown in Figure **Error! No text of specified style in document.-2**~~Figure **Error! No text of specified style in document.** 8Figure **Error! No text of specified style in document.** 6Figure 0-8~~ below.

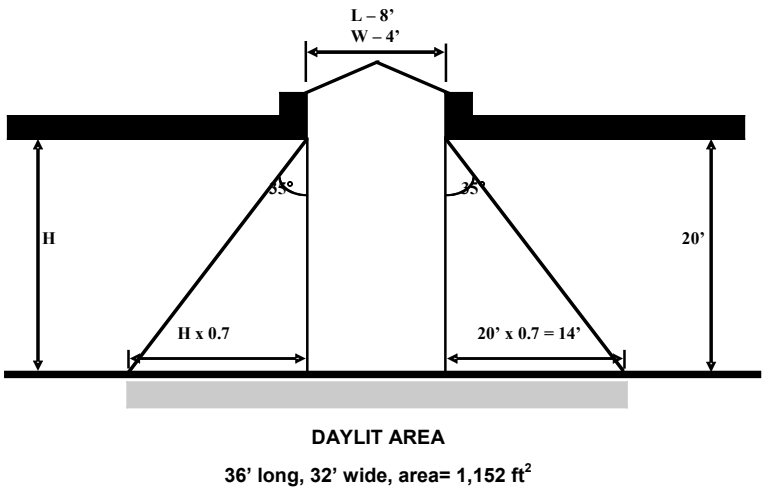

Figure ***Error! No text of specified style in document.****5.-28: Elevation View of Daylit Area under Skylight (no interior partitions)*

If there are permanent partitions or racks below the skylight, the partitions block the full extent of the skylit area. If there is a partition further from the edge of the skylight than 70% of the gap between the top of the partition and the ceiling, then the extent of the skylit area stops at the partition. The gap is the ceiling height minus the stack or partition height. The following figure shows this.

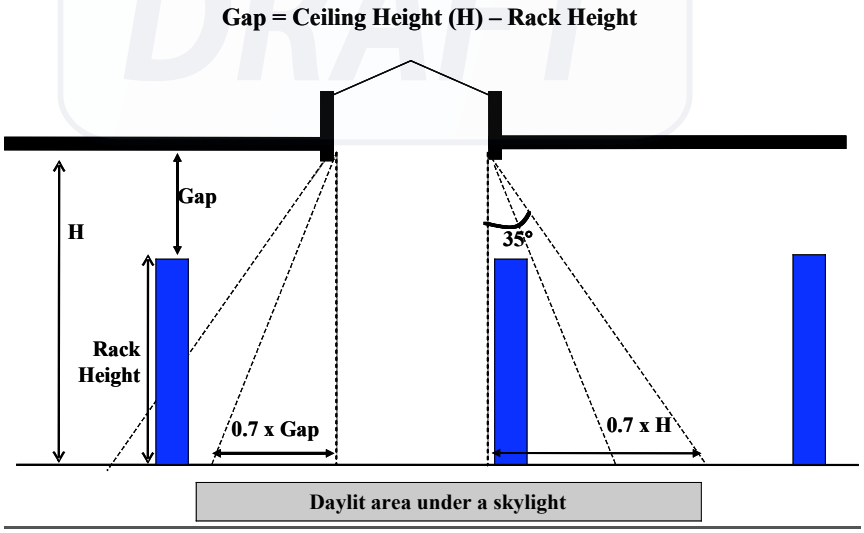

Figure 5-9: Elevation View of Daylit Area under Skylight with partitions

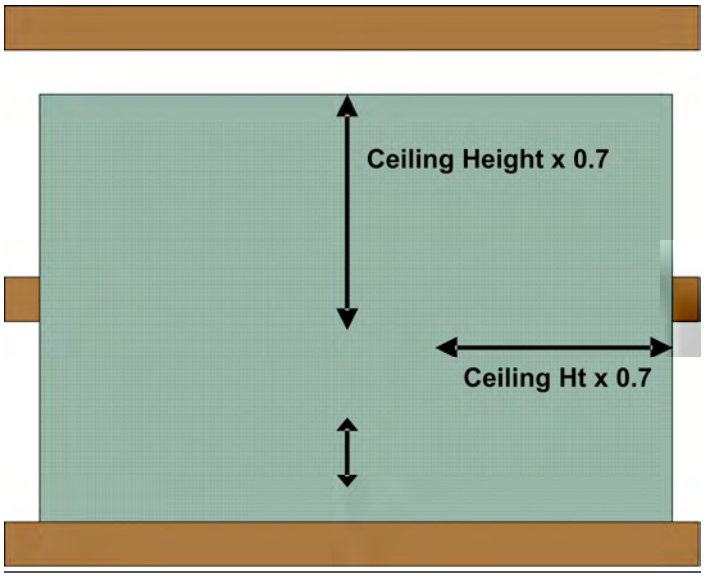

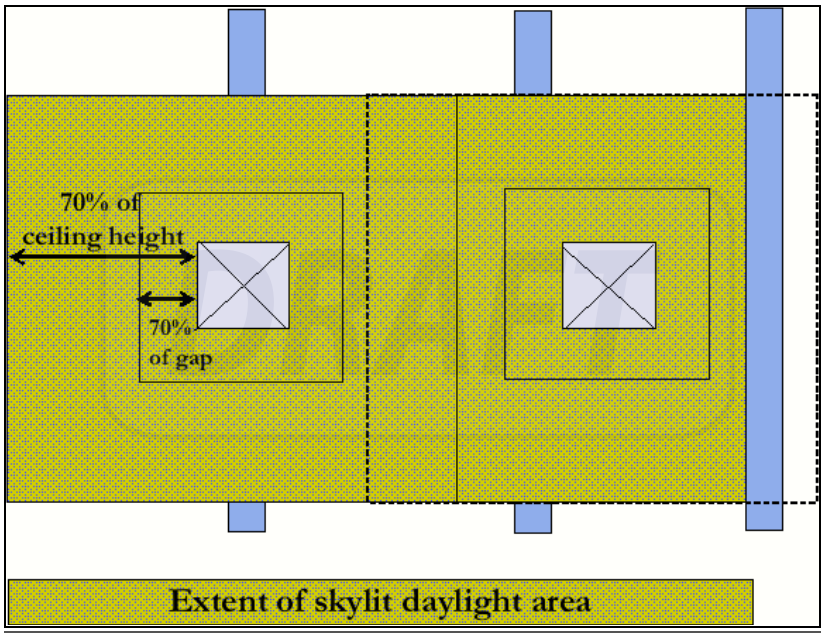

Figure 5-3~~10~~: Plan View of Daylit Area under Skylight with partitions

E. Lighting Controls Required

§131(c)2

Section 131(c) of the standards requires specific lighting controls to be installed in spaces. Fixtures in the daylit area(s) are required to be circuited such as that they can be controlled separately and effectively, in order to maximize energy savings from daylighting present in the daylit area(s).

F. Separate Switching near Windows and under Skylights

§131(c)2A

The control of electric lighting in the area where daylighting enters a building through windows or skylights is addressed in the Standards. It falls under the mandatory requirement for separate switching in daylit areas, and may receive credit under the optional automatic controls credits. Under the mandatory measures~~, where an enclosed space is~~ has a combined daylit area from ~~skylights and windows greater than 250 ft^2~~, the electric lighting within the daylit area must be switched so that the lights can be controlled separately from the non-daylit areas. However, this separate daylit area control is not required where an enclosed space has a combined daylit area from skylights and windows is ≤ 250 ft^2. Separate switching of the secondary sidelit area is not required, but a higher power adjustment factor (PAF) is available for separate automatic ~~switching~~daylighting control of the secondary sidelit area. It is acceptable to achieve control in the daylit area by being able to shut off at least 50% of the lamps within the daylit area. This must be done by a control dedicated to serving only luminaires in the daylit area. If there are separate daylit areas for windows and skylights, they must be controlled separately.

G. Daylighting Controls and Multi-Level Switching

§131(c)2A

The daylit area switching requirements are in addition to the multi-level switching requirements. Taken together, there are at least three ways to comply. See Figure ~~Figure Error! No text **of specified style in document.-11**Figure Error! No text **of specified style in document.-9**Figure 0-11Figure 3-6Figure 4-9~~. Daylight switching must be applied to a fixture if any portion of that fixture is within the daylit area.

DRAFT

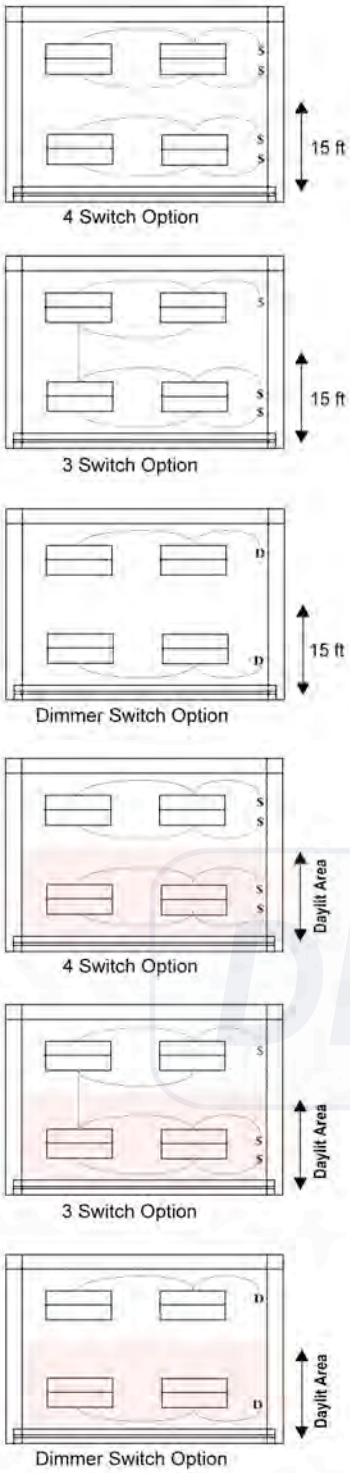

With the 4 Switch Option, the multi-level switching is provided separately to the daylit area and to the non-daylit area.

The 3 Switch Option also meets the requirements because switch "1" controls at least 50 percent of the lighting in the daylit area. Switch "2" controls the remainder of the lights in the daylit area and half of the lights in the non-daylit area. Switch "3" controls the remainder of lights in the non-daylit area.

The Dimmer Switch Option controls the daylit and non-daylit areas separately, and the dimmer takes care of the multi-level illumination requirement.

With the 4 Switch Option, the multi-level switching is provided separately to the daylit area and to the non-daylit area.

The 3 Switch Option also meets the requirements because switch "1" controls at least 50 percent of the lighting in the daylit area. Switch "2" controls the remainder of the lights in the daylit area and half of the lights in the non-daylit area. Switch "3" controls the remainder of lights in the non-daylit area.

The Dimmer Switch Option controls the daylit and non-daylit areas separately, and the dimmer takes care of the multi-level illumination requirement.

Figure 5-11— Combined Multi-level and Daylit Area Switching

H. Skylit Daylit Area Controls Requirements

§131(c)2B

The Standards ~~§ 131(c) 2B~~ require~~s~~ that the skylit daylit area be shown on the plans. The architect in cooperation with the electrical engineer or lighting designer should draw the daylit area on the lighting plans so that it is easy to identify the floor areas and light fixtures in those areas that fall under the requirements for daylighting controls in skylit daylit area(s).

I. Daylit Areas under Skylights ~~Exceeding 2,500 SF~~

§131(c)2B

There are prescriptive minimum skylight requirements for large enclosed spaces in §143(c) of the Standards. See Section 3.2.4 of the Envelope chapter of this manual for more information about the minimum skylight requirements.

Although the skylight requirements of §143 (c) are prescriptive, once skylights are installed, it triggers mandatory automatic lighting controls for lighting under skylights. ~~When the daylit area under skylights in any enclosed space (room) is greater than 2,500ft^2, then t~~ Therefore, automatic lighting controls are required for skylights installed voluntarily as well as for skylights installed to comply with the minimum skylight requirements in accordance with §143(c).

The general lighting in the daylit area must be on ~~an automatic multi-level control.~~ a automatic daylighting control device that meets the applicable requirements of Section 119 and be installed in accordance with Section 131(c)2D. However, when the daylit area under skylights in any enclosed space (room) is ≤ 2,500 ft^2 the daylight area is for skylights is not required to be automatically controlled. Barring exceptions written into the Standards, the automatic daylighting control device needs to be a photocontrol device capable of doing multi-level lighting control (dimming controls are considered to meet the multi-level requirement).

There are four exceptions that allow the designer to NOT specify such an automatic daylighting control device:

1. Where total skylit daylit area in an enclosed space is less than or equal to 2,500 sf.
2. Where the designer can prove to the satisfaction of the building compliance official that existing adjacent structures would obstruct direct beam sunlight for at least six hours per day during the equinox as calculated using computer or graphical methods.
3. For spaces where the skylight effective aperture is greater than 4.0% and all general lighting in the skylit area is controlled by a multi-level astronomical time switch. Such a time switch needs to meet the requirements of Section 119(h) and needs to have an override switch that meets the requirements of Section 131(d)2.
4. Where skylight effective aperture is less than 0.006. The effective aperture for skylit daylit area is specified in Section 146(a)2E and explained later in this section.

J. Primary Sidelit Area Controls Requirements

§131(c)2C

The Standards require that the primary sidelit area be shown on the plans. The architect in cooperation with the electrical engineer or lighting designer should draw the daylit area on the lighting plans so that it is easy to identify the floor areas and light fixtures in those areas that fall under the requirements for daylighting controls in primary sidelit area(s).

All general lighting in primary sidelit area(s) needs to be controlled by an automatic daylighting control device that meets the applicable requirements of §119 and be installed in accordance with §131(c)2D. Barring exceptions written into the Standards, the automatic daylighting control device needs to be a photocontrol device capable of doing multi-level lighting control (dimming controls are considered to meet the multi-level requirement).

There are four exceptions that allow the designer to NOT specify such an automatic daylighting control device:

1. Where total primary sidelit area in an enclosed space is less than or equal to 2,500 sf.
2. Where the effective aperture is less than 0.1. The effective aperture for primary sidelit daylight areas is specified in Section 146(a)2E.
3. Primary sidelit areas where existing surrounding structures are tall enough to obstruct significant daylight from reaching the windows. The determining factor is the height of the surrounding structure and its distance from the window. The exception is applicable for those windows, where the height(s) of adjacent building(s) is such that the windows will be substantially shaded during daytime hours. This occurs when the height(s) of the adjacent building(s) is at least twice as high above the floor level of the window(s) as the adjacent buildings' horizontal distance away from the window(s).
4. Parking garages are not required to install the automatic daylighting control devices.

K. Automatic Daylighting Control Device Installation and Operation

§131(c)2D

~~The minimally compliant control is a multi-level astronomical time switch as described in §119(h). The alternative control is a multi-level photocontrol as described in §119(i) – this multi-level photocontrol can also qualify for a power adjustment factor in §146(a)4E in the Standards.~~When automatic daylighting control devices are required by the Standards, they are required to be installed and configured to operate according to all of the following requirements:

1. Photosensors that are installed as part of the automatic daylighting control system need to be placed away from locations where they can be easily accessed and tampered with. However, it is also important to place them in locations where they provide adequate control of the fixtures in the daylit area. Ceiling mounted photosensors would meet this requirement as long as the ceiling is not within easy reach of a standing person. Wall-mounted photosensors within reach of the standing person

(commonly called wall-box sensors) do not meet this requirement of the standards

2. The location where the calibration adjustments are made to the automatic daylighting control system needs to be easily accessible to authorized personnel (but not to all occupants of the space). If the calibration adjustments are made in a ceiling mounted device, such a device must be placed in a ceiling that is no higher than 11 feet from the floor, and within two (2) feet of a ceiling access panel.

~~2.~~ The automatic daylighting control system needs to provide multi-level lighting controls; this can include continuous dimming.

3. ~~A multi-level time switch must reduce lighting power while maintaining a reasonable amount of lighting uniformity. This can be achieved by switching alternating lamps or luminaires or rows of luminaires in response to the amount of time that has elapsed since sunrise or the amount of time remaining before sunset.~~ The automatic switching control must have at least one step that is between 50% and 70% of rated power and a minimum step that is less than 35% of rated power.

The following situations are not required to have the multi-level lighting control:

a. Areas having a lighting power density < 0.3 W/ft2

b. When skylights are replaced or added to an existing building with and existing general lighting system.

Complying controls include but are not limited to a 2/3's controlled on/off or ½ + off controls as shown in Figure 5-13.

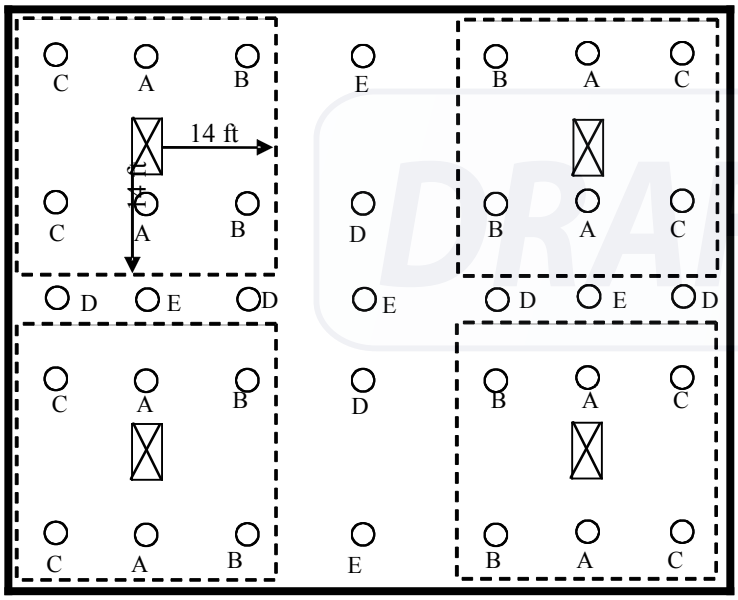

Figure 5-12 – Lighting Plan Showing Daylit Areas and Circuits (20 ft ceiling height)

The designer should designate on the reflected lighting plan, the location of skylights or windows and their associated daylit areas. ~~as shown in Figure~~~~Figure Error! No text **of specified style in document.-12**~~~~Figure Error! No~~

~~text **of specified style in document. 10**Figure 0-12Figure 3-7Figure 4-10~~ shows an example with skylights (rectangles with diagonals are skylights, circles are low bay fixtures, lettering designates circuits for each luminaire and dotted lines indicate the daylit areas). This helps prevent fixtures from being wired to the wrong circuit, something that is expensive to correct after the fact. Note that there are three circuits in the daylit areas as designated by circuits A, B and C. The circuiting has been organized so that the luminaires on circuit A are closer than the luminaires on circuits B and C. At relatively low daylight levels circuit A can be switched off. Since 2/3's (67%) of the luminaires in the daylit zone will still be on when circuit A is switched off, this meets the requirement of §131(b) that lighting can be reduced to be between 70% and 50% of rated power. At higher daylight levels circuits B and C can be shut off. In this diagram if conduit is running from top to bottom, the conduit only carries two circuits of wiring (C&D, A&E, ~~and~~ B&D, and E&D).

Note that the areas outside of the daylit areas have two circuits. This is required by multi-level control requirements of §131(b). If skylight spacing is reduced so that the entire space is in the daylit area, less lighting circuits are needed.

~~The astronomical time switch must have separate offsets from sunrise and sunset for the minimum of two channels that are needed to implement the control. The astronomical time switch must have the capability to offset the switch times as much as 4 hours from sunrise or sunset. When specifying an astronomical time switch, have the control manufacturer document that i the switch meets all the requirements of §119(h) of the Standards. The astronomical time switch system must also have manual timed over-ride controls in the controlled space that override the time switch for no more than 2 hours as described in §131(d)2. These manual switches may control no more than 5,000 sf of lighting except in large single spaces such as warehouses, industrial spaces, retail etc where no greater than 20,000 sf can be controlled on a single switch.~~

The automatic multi-level daylighting controls can either be switching or dimming. ~~If they are the switching type, they must have the power and uniformity requirements as described above for the astronomical time switch.~~ If they are the dimming type, all of the general lighting in the daylit area can be on a single control and continuously dimmed. In general the minimum power requirements will prohibit the use of dimming HID controls because these controls typically consume more than 35% at minimum light output.

Even when dimmed to 25% of light output, the example HID (metal halide) dimming system shown in Figure ~~Figure Error! No text **of specified style in document. 14**Figure Error! No text **of specified style in document. 12**Figure 0-14Figure 3-9Figure 4-12~~ consumes approximately 60% of full power. In contrast the fluorescent dimming system consumes approximately 15% of full power when fully dimmed. Thus HID systems will likely need to be controlled by a switching control to comply.

If a switching control is used, there are at least two stages of control. When circuiting these stages, predict or visualize which lights would be turned off first as daylight levels rise – these lights should be the lights that are closest to the

skylights. The next stage of lights to be turned off should be further away. The lighting controls manufacturer should be able to advise on the layout of circuits and how the equipment should be commissioned upon start-up.

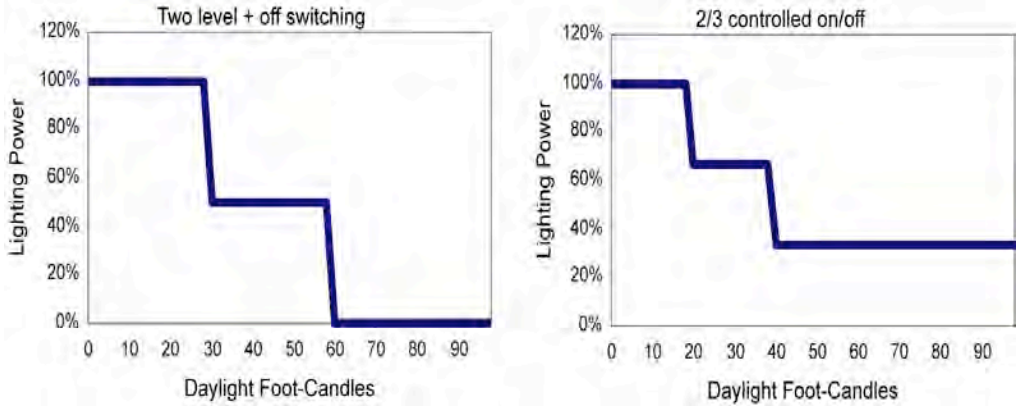

Figure 5-13 - Complying Switching Controls Strategies

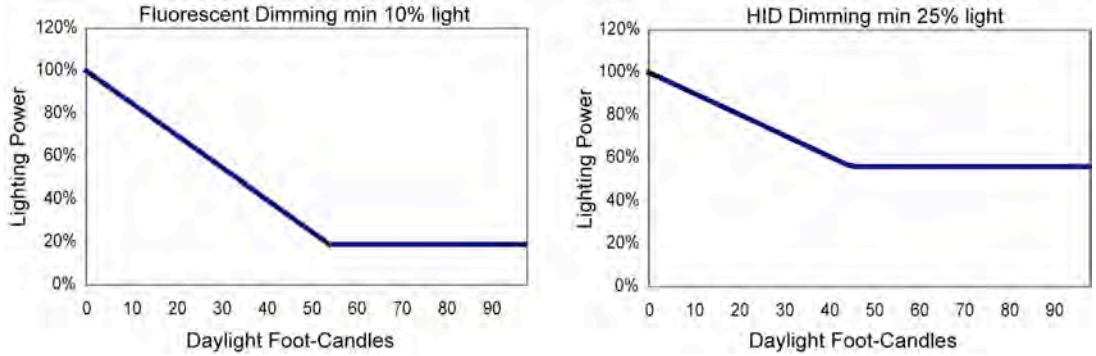

Figure 5-14 — Fluorescent and HID Power Draw in Response to Daylight

4. Under all daylight conditions, in all areas served by the controlled lighting, the combined illuminance from the controlled lighting and daylight is not less than the illuminance from the controlle4d lighting when no daylight is available.
5. When all areas served by the controlled lighting are receiving daylight illuminance levels > 150% of the illuminance from controlled lighting when no daylight is available, the controlled lighting power consumptions shall be ≤ 35% of the rated power of the controlled lighting.

L. Calculating Effective Aperture for Windows and Skylights

§146(a)2E

~~The daylit area near a window extends back a distance of 15 ft perpendicular to the glazing, or to the nearest 60-inch or higher permanent partition, whichever is less. The width of the daylit area is the width of the window plus either 2 feet on each side, the distance to a permanent partition, or one half the distance to the closest skylight or vertical glazing, whichever is least.~~

~~The daylit zone under skylights is the "footprint" of the skylight opening with the edge of the daylit area expanding by 70% of the ceiling height from each edge of the skylight footprint outward, unless it impinges upon: the daylit area under another skylight, the daylit zone from vertical glazing or the light is blocked by a permanent partition that is 5 ft tall or taller (see Figure 1-6). See special skylight cases Question 5-11 and 5-12.~~
~~The architect in cooperation with the electrical engineer or lighting designer should draw the daylit area on the lighting plans so that it is easy to see which luminaires must be on separate daylit area circuits.~~

~~Figure 4-6 – Plan View of Daylit Area near Window~~

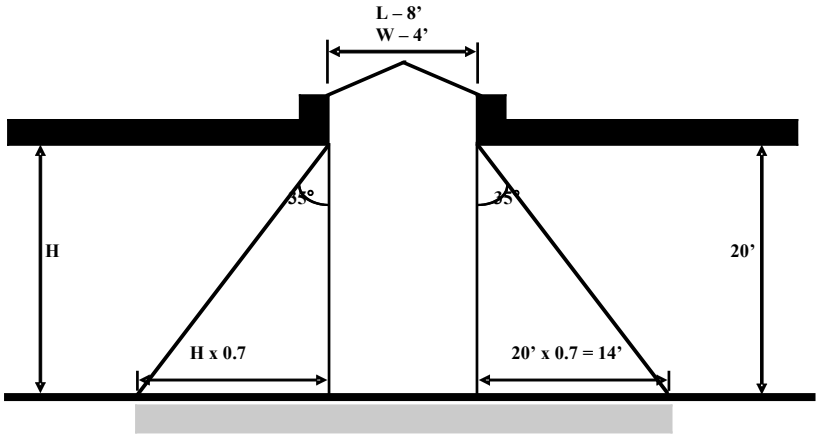

DAYLIT AREA

36' long, 32' wide, area= 1,152 ft^2

~~Figure 4-7 – Elevation View of Daylit Area under Skylight~~

~~The daylit zone under skylights is the "footprint" of the skylight opening with the edge of the daylit area expanding by 70% of the ceiling height from each edge of the skylight footprint outward, unless it impinges upon: the daylit area under another skylight, the daylit zone from vertical glazing or the light is blocked by a permanent partition that is 5 ft tall or taller (see Figure 1-6). See special skylight cases Question 5-11 and 5-12.~~
~~The architect in cooperation with the electrical engineer or lighting designer should draw the daylit area on the lighting plans so that it is easy to see which luminaires must be on separate daylit area circuits.~~

~~The only exception to the requirement of providing the separate control to daylit areas is when there is not enough daylight. This is decided in one of two ways:~~
~~1. When the daylight to a window or skylight is so obstructed by adjacent structures or natural objects that the effective use of daylighting is not reasonable. This determination must be made by the local enforcement agency.~~
~~2. When the effective aperture of the window is less than 0.1 (or of the skylight is less than 0.006). A low effective aperture prevents usable daylight from entering the area; it is caused by small glazing area, low transmission glazing materials, or a combination of both.~~
Calculation of the effective aperture is necessary for ~~both only if you have a very small~~ windows or skylights when Exceptions 3 or 4 to Section 131(c)2B to the automatic daylighting controls are used~~are installed either due to the mandatory or prescriptive requirements~~. Effective aperture is also required ~~.~~ ~~area and you don't want to put in separate control of lights in the daylit area. The skylight effective aperture is used~~ to calculate the credit when multilevel daylighting controls are used (see Section 5.5.4 ~~Automatic Lighting Control Credits~~ Reduction of Wattage Through Controls).

M. Effective Aperture (EA) for a Window System

§146(a)2E(i)

Effective Aperture (EA) for windows ~~equates to~~is a function of ~~-~~the visible light transmittance (V~~L~~T) of the window, the window area and the daylit area near windows. ~~times the window wall ratio.~~ The EA for windows is calculated for each room with daylighting.
EA is calculated separately for the primary sidelit area and the secondary sidelit area.

N. Effective Aperture (EA) for Primary Sidelit Area

§146(a)2E(i), Equation 146-A

The EA for primary sidelit area is a product of the window area, the VT of the window and the primary sidelit daylit area.

Equation 5-1 – Effective Aperture for Primary Sidelit Area

$$\text{Primary Sidelit Effective Aperture} = \frac{\sum \text{Window Area x VT}}{\text{Primary Sidelit Daylit Area}}$$

Window Area is defined as the rough opening of windows adjacent to the primary sidelit area and is expressed in square-feet.

O. Effective Aperture (EA) for Secondary Sidelit Area

§146(a)2E(ii), Equation 146-B

DRAFT

The EA for secondary sidelit area is a product of the window area, the VT of the window and the sum of the primary and secondary sidelit daylit areas.

Equation 5-2~~2~~ – Effective Aperture for Secondary Sidelit Area

$$\text{Secondary Sidelit Effective Aperture} = \frac{\sum \text{Window Area x VT}}{\text{Secondary Sidelit Daylit Area} + \text{Primary Sidelit Daylit Area}}$$

~~For the purpose of calculating effective aperture and calculating the Power Adjustment Factor for photocontrols in daylit areas sidelit by windows, the window to wall area ratio (WWR) is the window area divided by the area of that portion of the wall containing windows adjacent to the daylit area as seen from inside the room. This wall area includes the window areas in the wall and is calculated as the floor to ceiling height (as opposed to floor-to-floor as used in envelope calculations) multiplied by the horizontal length of the wall(s) containing window(s) adjacent to the daylit area. The effective aperture for a window, EA_{Window}, is:~~

~~EA_{Window} = Glazing VLT x WWR~~

P. Effective Aperture (EA) for a Skylight System

§146(a)2E(iii), Equation 146-C

$EA_{Skylight}$, is the product of the well efficiency (WE), the transmittance of the glazing and accessories (Glazing V~~L~~T), an 85% dirt factor and the skylight area to daylit area ratio. The Glazing V~~L~~T is the product of the visible light transmittance of the skylight glazing and all components in the light well that might reduce light transmission such as louvers, diffusers etc. The visible light transmittance of movable accessories (such as louvers, shades, etc.) is rated in the full open position.

Equation 5-3 – Effective Aperture of Skylights

$$\text{Effective Aperture} = \frac{0.85 \text{ x} \sum \text{Skylight Area x VT x Well Efficiency}}{\text{Daylit Area Under Skylights}}$$

1. Visible ~~Light~~ Transmittance (V~~L~~T)

Visible ~~Light~~ Transmittance (V~~L~~T) is ~~a property of the~~ the ratio of the light transmitted through the skylight assembly to the light incident on the glazing at normal incidence. The VT is rated for the ~~glass or plastic glazing material~~overall skylight assembly that includes the glazing material, frame, and all skylighting system accessories including diffusers, louvers and other attachments that impact the diffusion of skylight into the space.

If the skylighting system include movable louvers, ~~diffuers~~diffusers or other components, the visible light

transmittance of such movable accessories have to be rated in their full open position.

When the visible light transmittance of glazing and accessories are rated separately, the overall glazing transmittance is the product of the visible light transmittances of the glazings and accessories~~.~~.

~~It is the ratio of the light transmitted to the light incident on the glazing at normal incidence. The value of VLT for a given material is found in the manufacturer's literature, or ASHRAE Handbook, Fundamentals Volume, Chapter 30, Table 24. VLT is the property of the glazing material and does not include the effects of the framing. By contrast, NFRC ratings are based on Visible Transmittance (VT), which includes the effects of the framing; consequently, VT values are always lower than VLT values. For power adjustment factor (PAF) calculations (Table 146-A), VT values may be substituted for VLT. However, for daylit area calculations of §131(c) only VLT values must be used.~~

2. Well Efficiency

Well efficiency~~, as used to calculate effective aperture of skylights, is shown in the nomograph in Figure 146-A of the Standards. This figure is reproduced below. It is the ratio of the amount of visible light leaving a skylight well to the amount of visible light entering the skylight well~~equals the ratio of the amount of visible light leaving a skylight well to the amount of visible light entering the skylight well. Procedures for determining the well efficiency of skylight well are different for specular and tubular light wells from those for non-specular or non-tubular light wells.

Well Efficiency is ~~and shall be~~ determined from Equation 146 F or Table 146-B of the Standards for specular and tubular light wells and from Table 146-A of the Standards for all other light wells, based on the weighted average reflectance of the walls of the well and the geometry of the light well, or other test method approved by the Commission.

Equation 146-F of the Standard is repeated below as Equation 3-2:

Equation 5-4 – Well Efficiency for Specular Tubular Light Wells

$$WE_{tube} = \rho^{(2.2*\frac{L}{D})}$$

In the equation ρ is the specular reflectance of the interior light well, L is the length of the light well and D is the inside diameter of the light well.
~~the nomograph in Standards Figure 146-A based on the weighted average reflectance of the walls of the well and the well cavity ratio (WCR), or other test method approved by the Energy Commission. The overall well efficiency is the product of the vertical well efficiency and the splayed well efficiency.~~

~~The area weighted average reflectance [of the walls of the well (R)] is the average calculated by the area of reflectance of all surfaces associated with a skylight.~~ Typical reflectance values are given in Table 5-1 below. However, the compliance submi~~ssion~~ttal ~~shall~~ should use reflectances of the surfaces from the product manufacturer if they are available. Both paint and acoustic tile manufacturers publish reflectance values for their products. For skylight wells that are a combination of a splayed well and a vertical wall well, the overall well efficiency is the product of the vertical well efficiency and the splayed well efficiency, where each well efficiency is based on the dimensions at the bottom portion with similar wall angles.

Table 5-1~~1~~ – Reflectance of Light Well Surfaces

Material	Reflectance %
white plaster	90
Aluminum sheet, polished	82
acoustic tile	80
white paint	70-85
pastel color paint	45 – 60
Saturated colors	25 – 35
galvanized sheet metal	50
unpainted concrete	30
unpainted wood	30
black tar paper	7

DRAFT

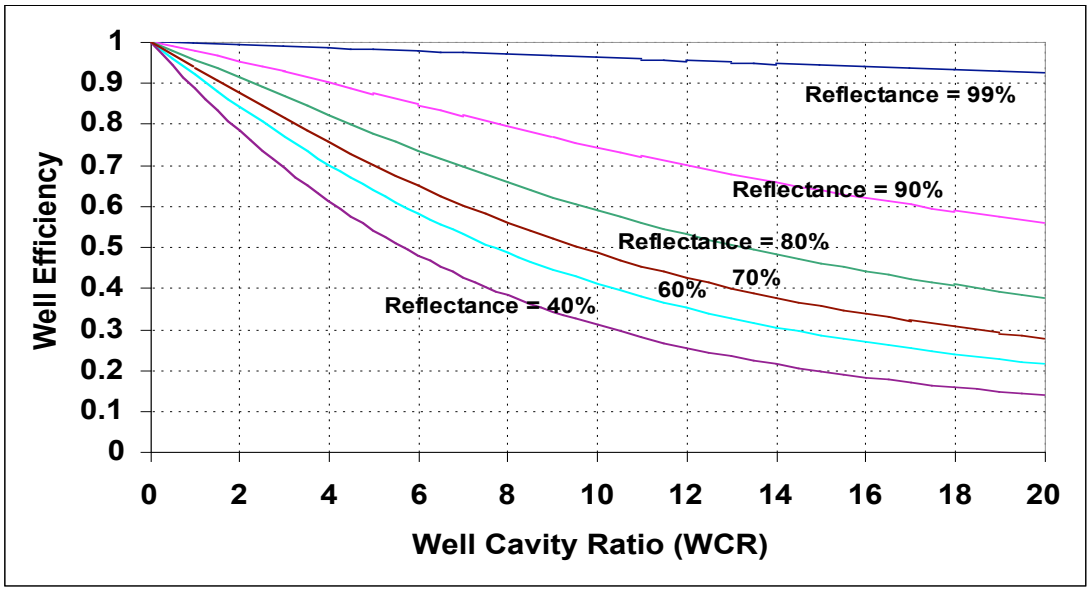

~~Figure 34-8 – Well Efficiency Nomograph~~

3. Well Cavity Ratio (WCR)

The well efficiency for non-specular or non-tubular light wells is based on the average weighted reflectance of the walls of the light well and the well cavity ratio. The well cavity ratio (WCR) is determined by the geometry of the skylight well and shall be determined using either Equation 146-D or Equation 146-E of the Standards and repeated here as Equation 3-5 and Equation 3-6 respectively. ~~The well cavity ratio (WCR) is determined by the geometry of the skylight well and shall be determined using either equation below.~~

Equation 5-5 – Well Cavity Ratio for Rectangular Wells

$$\text{WCR} = \left(\frac{5 \times [\text{well height}\,(\text{well length} + \text{well width})]}{\text{well length} \times \text{well width}}\right)$$ *;or*

Equation 5-3~~6~~ – Well Cavity Ratio for Non-rectangular-shaped Wells:

$$\text{WCR} = \left(\frac{2.5 \times \text{well height} \times \text{well perimeter}}{\text{well area}}\right)$$

Where the well ~~length, width,~~ perimeter, and well area are measured at the bottom of the well.

Example 5-3

Question

What is the daylit area associated with the skylight shown in Figure Error! **No text of specified style in document.-2**~~Figure Error! **No text of specified style in document. 8**Figure Error! **No text of specified style in document. 6**Figure 0-8~~?

Answer
The daylit area of the skylight is calculated from the length and width of the skylight footprint, and from 70% of the ceiling height (there are no permanent partitions or nearby windows/skylights). The length of the daylit area is the length of the skylight (8') plus the floor-to-ceiling height on each end times 70% (70% of 20=14; 14' + 14'), for a total daylit area length of 36'. The width of the daylit area is the width of the skylight (4') plus 70% of the floor-to-ceiling height on each end (14'+ 14') for a total daylit area length of 32'. The daylit area is its length times its width, or 36' x 32' =1,152 ft².

Example 5-4

Question

A room has a window area of 80 ft², and the highest window has window head height of 7 feet (vertical height measured floor to top of window). The exterior wall that is adjacent to the daylit area has ~~an area~~ a height of ~~260 ft²~~ 10ft (wall vertical height measured floor to ceiling~~; wall area includes openings~~) and width of 26 ft. The window glazing has a visible light transmittance (VLT) of 0.50. Do the daylit area switching requirements apply in this room?

Answer
Yes. The effective aperture, EA = (80 x 0.50)/(26 x 10) = 0.15, which is greater than 0.1~~The window wall ratio (WWR) for the room is 80 ft² / 260 ft² = 0.31. The effective aperture, EA = 0.31 x 0.50 = 0.155, which is greater than 0.1~~ (exception for inadequate daylight does not apply). Daylighting control credits are available for the room if automatic daylighting controls are installed (see §146).

Example 5-5

Question

A large room has 4' by 8' skylights spaced on 40-foot centers. The skylight glazing has a visible light transmittance of 50% and has 3-foot deep vertical light wells with a surface reflectance of 80%. The ceiling height is 20 feet. What is the effective aperture of the skylighting system?

Answer
As shown in question 4-6, the daylit area under a single 4' x 8' skylight is 36 by 32 feet, for a daylit area under a single skylight of 1,152 ft^2. Since the spacing is greater than the daylit area dimensions, there is no overlap of daylit areas under skylights and calculations of effective aperture can be performed on a single representative skylight. From the equation below, the remaining piece of information is the well efficiency.

$$\text{Effective Aperture} = \frac{0.85 \text{ x Total Skylight Area x Glazing Visible Light Transmittance x Well Efficiency}}{\text{Daylit Area Under Skylights}}$$

$$\text{Effective Aperture} = \frac{0.85 \text{ x} \sum \text{Skylight Area x VT x Well Efficiency}}{\text{Daylit Area Under Skylights}}$$

To calculate the well efficiency, first calculate the well cavity ratio (WCR):

$$\text{WCR} = \left(\frac{5 \times [\text{well height}\,(\text{well length} + \text{well width})]}{\text{well length} \times \text{well width}}\right) = \left(\frac{5 \times 3\,(8+4)}{8 \times 4}\right) = 5.6$$

From looking at ~~the nomograph in Figure 3-8Figure 4-8~~Table 146-A of the Standards ~~and plotting on the 80% reflectance line that corresponds to a 5.6 well cavity ratio,~~ one finds that the light well with 80% reflectance and WCR of 5.6 has a 75% well efficiency (interpolating between WCR 4 and 6 values for 80% reflectance). Thus the effective aperture of the skylights is:

$$\text{Effective Aperture} = \frac{0.85 \text{ x } 32 \text{ x } 0.5 \text{ x } 0.75}{1{,}152} = 0.0089$$

Since the effective aperture is greater than 0.006, requirements for skylighting controls will apply to this system.

Example 5-6

Question
How close together do the skylights in the previous question have to be to have an effective aperture of 0.011?

Answer
To have a higher effective aperture for the same skylight dimensions, ceiling height etc, the daylit area under skylights must overlap so there is more total skylight area per total daylit floor area under skylights. To solve this, calculate the previous effective aperture equation keeping constant skylight area, glazing transmittance and setting Effective aperture to 0.011.

$$\text{Effective Aperture} = \frac{0.85 \text{ x } 32 \text{ x } 0.5 \text{ x } 0.75}{\text{Daylit Area Under Skylights}} = 0.011$$

$$\text{Daylit Area Under Skylights} = \frac{0.85 \text{ x } 32 \text{ x } 0.5 \text{ x } 0.75}{0.011} = 927 \text{ ft}^2$$

Thus if the skylights are spaced 30 ft apart in one dimension and less than (927)/(30) = 30.9 ft in the other direction the effective aperture will be greater than 0.011.
This calculation can be used to estimate maximum spacing of skylights in large open spaces to comply with the minimum effective apertures prescriptively required in §143(c).

Example 5-7

Question
A 4' by 4' skylight having a glazing transmittance of 82% is placed on top of a light well that has a 4 foot tall vertical section with a 95% reflectance which is above a diffuser with 92% transmittance and a 3' deep 45° splayed light well with 80% reflectance. Also in the light well is a louver with an 85%transmittance when it is full open. What is the overall well efficiency and the overall glazing VLT including accessories? What is the daylit area under the skylight if the suspended ceiling height is 10 feet?

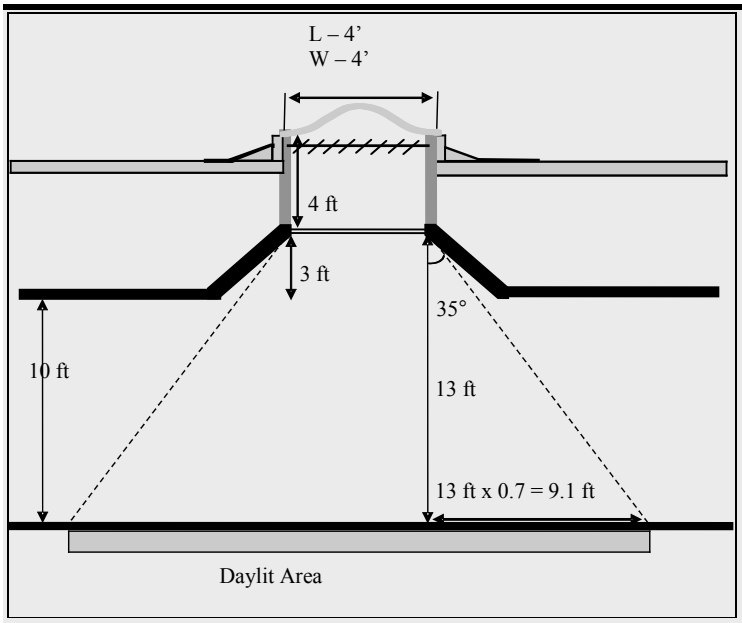

Answer

The overall well efficiency is the product of the vertical well efficiency and the splayed well efficiency. The well cavity ratio (WCR) of the vertical well is calculated by:

$$\text{WCR} = \left(\frac{5 \times \text{well height}\left(\text{well length} + \text{well width}\right)}{\text{well length} \times \text{well width}}\right) = \left(\frac{5 \times 4\left(4+4\right)}{4 \times 4}\right) = 10$$

For a WCR of 10 and a reflectance of 95%, the well efficiency taken from ~~the nomograph in Figure 146-A in~~Table 146-A of the Standards is 85% (interpolating between 90% and 99% reflectances for WCR 10).. ~~This nomograph is reprinted above in Figure 3-8~~Figure 4-8.

The calculation of WCR of the splayed well is based upon the width and length at the bottom of the well which for a 45° splay is 10 ' by 10'. Thus the WCR for the splayed well is:

$$\text{WCR} = \left(\frac{5 \times \text{well height}\left(\text{well length} + \text{well width}\right)}{\text{well length} \times \text{well width}}\right) = \left(\frac{5 \times 3\left(10+10\right)}{10 \times 10}\right) = 3$$

For a WCR of 3 and a reflectance of 80%, the well efficiency taken from ~~the nomograph in Figure 146-A~~Table 146-A in the Standards is 87%.

The overall well efficiency is 0.85 x 0.87 = 74%.

The overall glazing VLT is the product of the glazing, diffuser and louver transmittances. The louver transmittance is measured in the full open position. The overall transmittance is 0.82 x 0.92 x 0.85 = 64%.

Since the splay opens wider than 0.7 feet out for each foot of height, the daylit zone is measured from the transition between the vertical well and the splayed well. Since this transition is 13 feet above the floor the footprint of the skylight is increased on all sides by 0.7 x 13 ft = 9.1 feet. Thus the daylit area is 9.1+ 4 + 9.1 = 22.2 feet on a side for a total area of 492 ft^2.

Example 5-8

Question

Each of the two rooftop monitors as shown in the below figure, has four 14 ft long by 4 ft tall windows placed end-to-end with a visible transmittance of 60%. Each monitor sits on top of a light well 60 ft long, 5.5 feet wide and 3.75 ft tall with surface reflectance of 80%. The two light wells are 8 feet apart and the ceiling height is 10 feet. The lighting power density of general lighting is 1.5

W/ft^2. What is the daylit area, effective aperture~~, well cavity ratio~~ and the power adjustment factor (PAF) associated with the rooftop monitors?

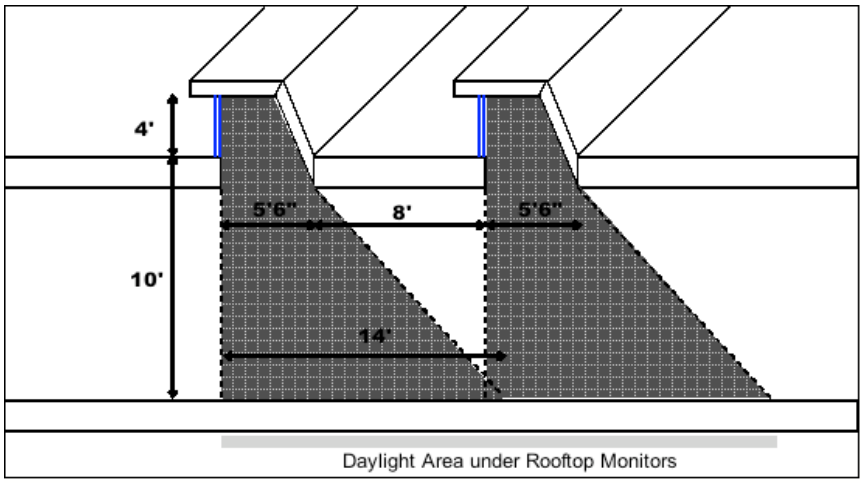

Daylight Area under Rooftop Monitors

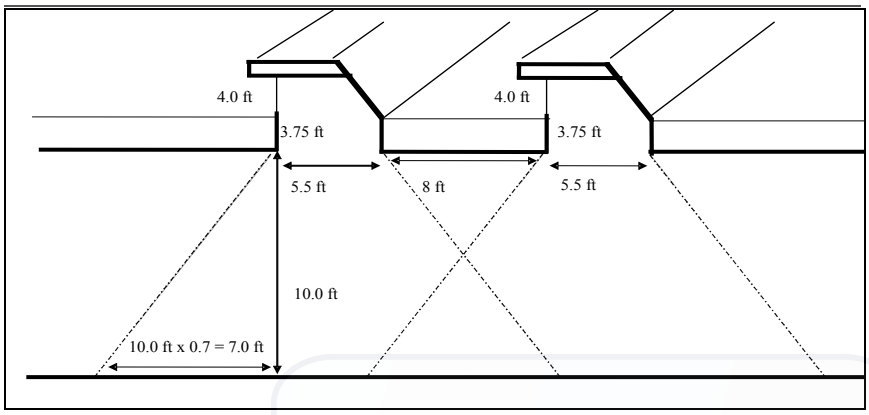

Answer

Standards currently define skylights as glazing having a slope less than 60 degrees from the horizontal with conditioned or unconditioned space below. Since rooftop monitors have a slope greater than 60 degrees, they are therefore considered to be windows.

~~Since the rooftop monitor sits on top of a light well, the monitor would be treated like a skylight. See plan view of skylights and daylit area below. In this case the light well opening beneath the monitor is 60 ft long, 5.5 ft wide and 3.75 ft tall.~~

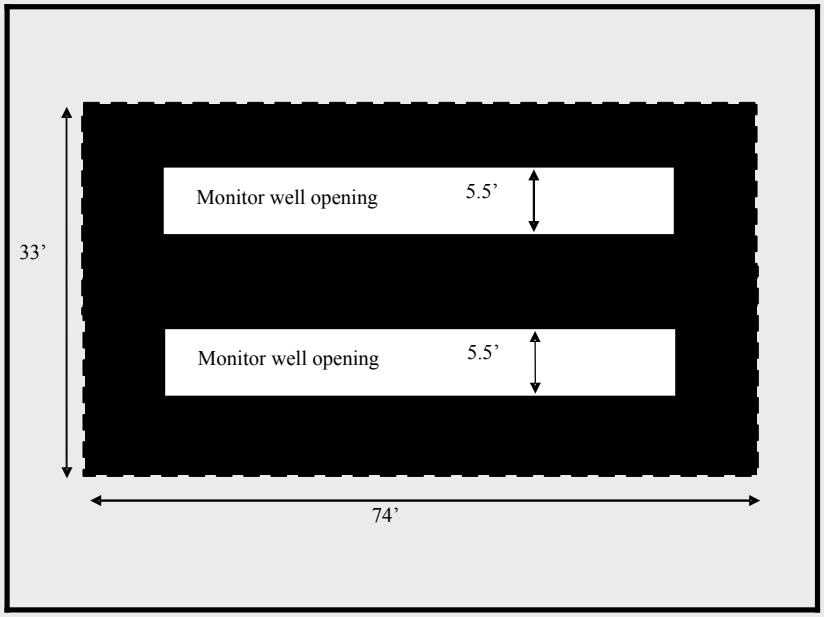

~~[MODIFY THIS PICTURE~~

Daylit Area

Since the rooftop monitor is considered to be the same as a window, the daylit area can be calculated the same way one calculates the primary sidelit daylit area from windows. In this case, the daylit zone starts from the vertical plane of the monitor, since there is no "wall".

Thus, the primary sidelit daylit area depth in this case will be 14' (vertical height from the floor to the top of the monitor). As noted in the diagram above, the two rooftop monitors are positioned 13'6" apart. Thus there is an overlap of 6" in the daylit area depth from the two monitors. Title 24 disallows double-counting this overlap, thus, the overall daylit zone depth from both monitors will be = 14' + 14" – 0'6" = 27'6".

As for the width of the primary sidelit daylit area that is equal to the clerestory width plus 2' on either side of each monitor (as long as the 2' areas do not overlap). In our example, since the monitors are placed end to end, we will count the 2' only at the two ends.
Thus, daylit area width =
(4 monitors in each bay x 14' length of each monitor) + 2' + 2' = 60'.

Thus the total primary sidelit daylit area under rooftop monitors =
Primary sidelit daylit area depth x primary sidelit daylit area width = 27'6"x 60' = 1656 sqft.

~~The daylit area is the footprint of the light well opening plus 70% of the ceiling height in each direction. Since the ceiling height is 10 feet, the daylit area is the light well opening plus an additional 7 feet in each of the four directions. The best way to evaluate the daylit area under skylights is to plot on a roof plan the skylight openings and then around these openings to designate~~
~~the daylit area. The dotted line designating the edge of the daylit area is offset from the skylight opening by 70% of the ceiling height, in this case 7 ft. This plan representation of the daylit area is also useful for electrical contractors so they can readily see which luminaires need to be on manual or automatic daylighting controls. In this example, the light wells are closer together than 14' and~~

~~thus the daylit areas of the two light wells overlap. The overall area of this overlapping daylit area is given by the following:~~

~~Width = (0.7 x 10') + 5.5' + 8' + 5.5' + (0.7 x 10')~~
~~Width = 7' + 5.5' + 8' + 5.5' + 7' = 33 feet~~

~~Length = (0.7 x 10') + 60' + (0.7 x 10')~~
~~Length = 7' + 60' + 7' = 74ft~~
~~Daylit Area = 33 ft x 74ft~~
~~= 2,442 sf~~

Effective Aperture
~~and Wall Cavity Ratio~~

The effective aperture is the fraction of light entering the space as compared to the amount of sunlight on the ~~roof~~ rooftop monitor above the daylit area.

Again we will use the effective aperture formula used for primary sidelit daylit area.

$$\text{Primary Sidelit Effective Aperture} = \frac{\sum \text{Window Area x VT}}{\text{Primary Sidelit Daylit Area}}$$

Thus EA = (2 bays x 4 window per bay x 14' width x ' 4' height) x 60% / 1656 sqft
= 448 x 0.60/1656 = 0.1623

Power Adjustment Factor (PAF)

Since the daylit area due to the rooftop monitors is less than 2,500 sqft, daylighting controls are not required by code, and the space is eligible for a PAF. Based on Table 146-C of the Standards, for a effective aperture of 16.23%, the PAF equals 0.12.

~~For this situation the total glazing area is equivalent to the total skylight area. The visible light transmittance of the glazing was given as 60% and the daylit area was calculated above as 2,442 sf. The remaining piece of information needed to calculate the effective aperture is the well efficiency. The well efficiency is obtained by looking it up on the nomograph in Figure 5-10 as a function of average well surface reflectance and the well cavity ratio of the light well. The well cavity ratio (WCR) is given by:~~

$$\text{WCR} = \left(\frac{5 \times [\text{well height}\,(\text{well length} + \text{well width})]}{\text{well length} \times \text{well width}}\right)$$

~~For the skylight well with a length of 60' a width of 5.5 feet and a height of 3.75 feet, the well cavity ratio is:~~

$$\text{WCR} = \left(\frac{5 \times 3.75\,(60 + 5.5)}{60 \times 5.5}\right) = 3.72$$

~~As shown in Figure 5-10, the well efficiency nomograph has well efficiency on the vertical axis, a series of curves for each well reflectance and the well cavity ratio on the horizontal axis. The skylight well is painted with white paint with a reflectance of 80%. Locating the point on the 80% reflectance curve directly above a well cavity ratio of 3.72 corresponds to a well efficiency of 0.82 on the vertical axis of the graph.~~

~~Given the well efficiency one can calculate the effective aperture for the daylit area underneath the two rooftop monitors.~~

$$\text{Effective Aperture} = \frac{\text{0.85 x Total Skylight Area x Glazing Visible Light Transmittance x Well Efficiency}}{\text{Daylit Area Under Skylights}}$$

~~The total glazing area (skylight area) is the 4 pieces of glass 14 feet by 4 feet in each monitor times the two monitors for a total glazing area of:~~

DRAFT

~~Glazing area = (4 windows/monitor) (4 ft x 14 ft) (2 monitors) = 448 ft^2~~
~~Thus the effective aperture is:~~

$$\text{Effective Aperture} = \frac{0.85 \text{ x } 448 \text{ x } 0.60 \text{ x } 0.82}{2{,}442} = 0.077$$

~~Since the effective aperture is greater than 0.006, daylighting controls are required (§131(c) Exception 1). However, the daylit area is less than 2,500 ft^2, and automatic daylighting controls are not required, but separate control of lights in daylit areas from lights in non-daylit areas is required (§131(c)1. If daylighting controls are installed and the system meets certain criteria, a power adjustment factor (PAF) is available which treats the installed lighting as if there are less installed watts (see Section 5.4.4 of this manual).~~
~~Power Adjustment Factor~~
~~Calculating the Power Adjustment Factor (PAF) for Multi-level Daylighting Controls Under Skylights: From the example above with the general lighting in the space having a lighting power density of 1.5 W/ft^2, the PAF is:~~

$$\text{PAF} = 10 \times 0.077 - \frac{1.5}{10} + 0.2 = 0.82$$

~~This power adjustment factor is very high and reflects that the space is fully daylit almost all daytime hours. The power adjustment factor cannot be greater than 1 as it reduces the installed lighting power of the controlled lighting by this fraction.~~
~~To obtain this Power Adjustment Factor (PAF) credit, the system must meet two criteria:~~
~~1) The control system must be an automatic multi-level daylighting control system as defined in §119(i), §131(b), and §131(c).~~
~~2) The glazing or diffuser must be diffusing as defined by having a haze rating greater than 90% as defined in §143(c). Products that have such a rating include prismatic diffusers, laminated glass with diffusing interlayers, pigmented plastics and the like. The purpose of this requirement is to assure the light is diffused over all sun angles.~~

~~Other methods of diffusion that result in sufficient diffusion of light over the course of the entire year would also be acceptable in lieu of using diffusing glazing. Acceptable alternatives are baffles or reflecting surfaces that ensure over all sun angles encountered during the course of a year that direct beam light is reflected off of a diffuse surface prior to entering the space. This alternative method of diffusion would have to be documented by the designer and approved by the code authority in your jurisdiction.~~

Example 5-9

Question
An office space with a 10-foot ceiling height is daylit with tubular skylights, also known as tubular daylighting devices or TDD's. These TDD's have a an acrylic dome with 90% visible transmittance and a 6 ft deep light shaft, The light shaft is 22" in diameter, has a 95% reflectance and terminates into a 2 ft by 2 ft square adapter with a 92% transmissive lens. This lens has a haze rating greater than 90% (i.e. it is sufficiently diffusing). The eight skylights are placed in two rows with 10 ft by 20 ft on center spacing. This office space has a general lighting power density of 1.1 W/ft^2 and the lights that are in the daylit area under skylights are on multi-level daylighting controls. What PAF should be applied?

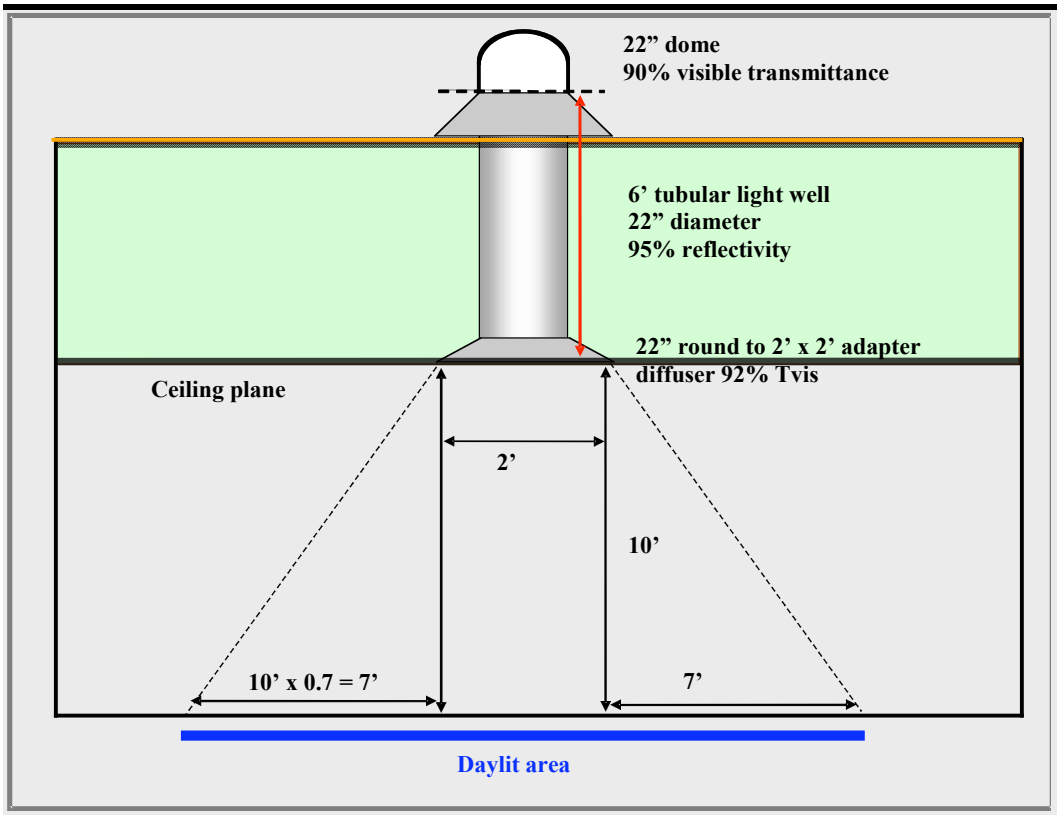

Elevation Plan of Tubular Skylight

Answer:
The Power Adjustment factor is a function of the Effective Aperture of the skylighting system and the LPD of the general lighting in the space. The effective aperture in turn is a function of the skylight area, skylight glazing transmittances (including the transmittances of the diffuser), the well efficiency and the daylit area under skylights.
The skylight area per skylight is:

$$\text{Skylight area} = \frac{\pi \times D^2}{4} = \frac{\pi \times (22''/12'')^2}{4} = 2.64\,\text{sf}$$

The daylit area under a skylight is the footprint of the bottom of the light well plus 70% of the ceiling height in each direction. As shown in Elevation Plan of Tubular Skylight above, the daylit area under a single 2 ft by 2 ft base of the light well is expanded by 7 feet (70% of the 10 ft ceiling height) in each direction for the total daylit area under a single skylight being 16 ft by 16 ft. However, the daylit areas overlap and must not be double counted. The calculation of daylit area under skylights is simplified by plotting on a roof plan the skylight openings and then around these openings to designate the daylit area as shown in Plan View of Tubular Skylight and Electric Lighting below. As shown on the plan, the daylit area under each row of skylights is 16 ft by 46 ft for a total of 736 ft^2. Since there are two rows of skylights, the total daylit area in the room is 1,472 ft^2.

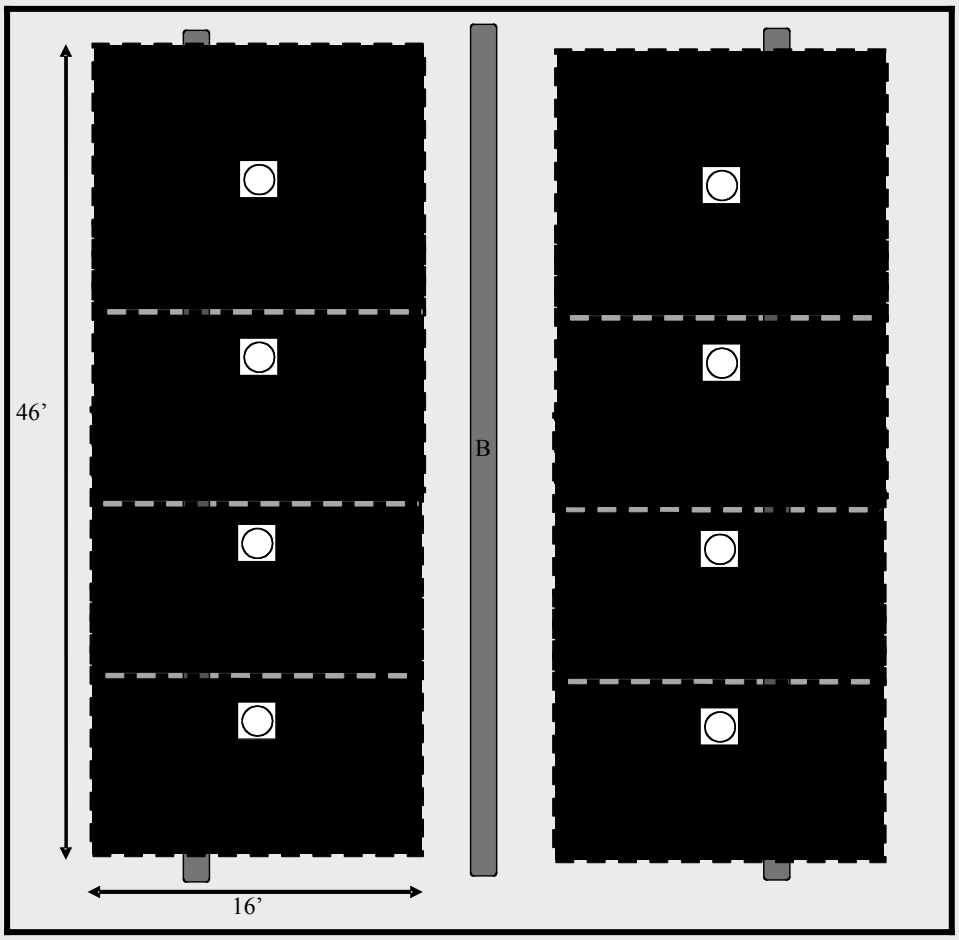

~~Plan View of Tubular Skylight and Electric Lighting~~

~~The well efficiency is calculated by using Table 146-B of the standards. This table provides values for well efficiency of tubular skylight wells based on reflectance of the well and the ratio of skylight well length (L) to the interior diameter of the tubular well (D). the well efficiency nomograph which has lines for various light well reflectances and well cavity ratios. The well cavity ratio (WCR) of all non-rectangular light wells is calculated by equation 146-C of the Standards:~~

$$\text{WCR} = \left(\frac{2.5 \times \text{well height} \times \text{well perimeter}}{\text{well area}}\right)$$

~~This can be redefined in terms of the height over diameter ratio (H/D) of a tubular skylight as follows:~~

$$\text{WCR} = \left(\frac{2.5 \times \text{well height} \times \text{well perimeter}}{\text{well area}}\right) = \left(\frac{2.5 \times \text{H} \times \partial \times \text{D}}{\partial \times \text{D}^2 / 4}\right) = 10 \times \frac{\text{H}}{\text{D}}$$

~~For this example the 6 foot (72 inches) tall 22 inch diameter light well has a HL/D ratio of 72/22 = 3.3. or a well cavity ratio of 10 x 3.3 = 33.0 The well efficiency nomograph in the Standards is for well cavity ratios up to 20. For this example the well cavity ratio in Extended Well Efficiency Nomograph below, is extended out to a WCR of 100. On this graph one can see that tubular skylight with a reflectance of 95% and with a WCR ratio of 33 (an H/D ratio of 3.3) has a well efficiency of approximately 60%.~~

DRAFT

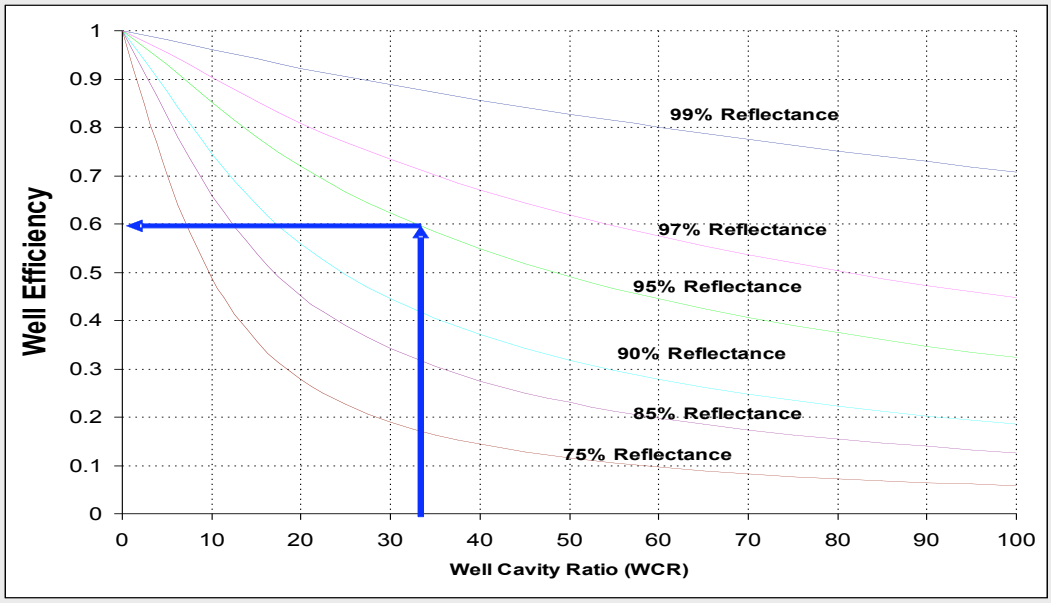

~~Extended Well Efficiency Nomograph~~

~~Based on this L/D ratio and 95% reflectivity of the well, the well efficiency is 0.68 or 68%.~~

~~Combining all of the information given or calculated above, the effective aperture can be calculated for this system.~~

$$\text{Effective Aperture} = \frac{0.85 \text{ x Total Skylight Area x Glazing Visible Light Transmittance x Well Efficiency}}{\text{Daylit Area Under Skylights}}$$

$$\text{Effective Aperture} = \frac{0.85 \text{ x} \sum \text{Skylight Area x VT x Well Efficiency}}{\text{Daylit Area Under Skylights}}$$

~~The glazing visible transmittance is the product of the glazing transmittance of 0.9 and the diffuser glazing transmittance of 0.92. The system effective aperture is:~~

$$\text{Effective Aperture} = \frac{0.85 \text{ x 8 skylights x 2.64 sf/skylight x 0.90 x 0.92 x 0.68}}{1{,}472} = 0.0069$$

~~This system just barely requires daylighting controls since Section 131(c) Exception 1 exempts systems with effective apertures less than 0.006.~~

~~Since the daylit area is less than 2,500 ft^2, a separate manual control for lighting in the daylit area will suffice.~~

~~In Plan View of Tubular Skylight and Electric Lighting above, the lights labeled "A" must be on a separate control from those labeled "B".~~

~~The Power Adjustment Factor (PAF) for electric lighting in daylit areas under skylights and controlled by a multi-level daylighting control meeting the requirements of Section 119(i) is: calculated per Table 146-C of the Standards.~~

$$\text{PAF} = 10 \times \text{Effective Aperture} - \frac{\text{Lighting Power Density}}{10} + 0.2$$

~~Given that the general lighting power density is 1.1 W/ft^2 and the effective aperture is 0.00610068, the PAF is:~~

$$PAF = 10 \times 0.0061 - \frac{1.1}{10} + 0.2 = 0.151$$ ~~0.12.~~

~~Alternatively, if the light wells of the tubular skylights have a 99% reflectance, the well efficiency would be 87% and the resulting effective aperture would be increased to 0.0088. Such a system would have a power adjustment factor of 0.178. One can also increase the effective aperture and thus the PAF by spacing the skylights closer together.~~

5.2.2 Lighting Power Allowances

5.2.2.1. Allowed Lighting Power

The prescriptive approach for lighting involves a comparison of the building's allowed lighting power with its actual lighting power (as adjusted for controls). The actual power shall be less than the allowed power.

There are three methods to determine the allowed lighting power using the prescriptive approach: the complete building, the area category, and the tailored method. The lighting allotment must be based on area intended only for occupancy, or complete lighting plans must be submitted.

5.2.2.2. Indoor Lighting Power Trade-offs

Indoor lighting power trade-offs shall be determined as follows:

A. Complete Building Method
   1. Allowed lighting power determined according to the Complete Building Method may be traded only within a single building. Allowed lighting power shall not be traded between two or more buildings using the Complete Building Method.
   2. Conditioned and unconditioned spaces shall be separate allotments, which shall be met separately without tradeoffs between the separate allotments.

B. Area Category Method
   1. Allowed lighting power determined according to the Area Category Method may be traded between the primary function areas using the Area Category Method.
   2. Conditioned and unconditioned spaces shall be separate allotments, which shall be met separately without tradeoffs between the separate allotments.
   3. EXCEPTION to §146(b)2:. Additional lighting power that is allowed according to the footnotes in Table 146-F shall not be traded. For example, in footnote 1, the allowance for ornamental chandeliers and sconces, when available, is the smaller of 1.0 W/ft^2 or the actual design wattage. If 0.5 W/ft^2 is used, then the allowance is only 0.5 W/ft^2. The is no left over wattage to be traded.

C. Tailored Method
   1. Allowed lighting power for wall display, floor display and ornamental/special effects lighting determined according to the

Tailored Method shall be separate allotments without tradeoffs between the separate allotments.

2. Allowed lighting power for general illumination determined according to the Tailored Method may be traded only within the primary function areas using the Tailored Method.

D. Between Complete Building, Area Category, and Tailored Methods
   1. Allowed lighting power shall not be traded between the Complete Building Method, Area Category Method, or Tailored Method.
   2. EXCEPTION to §146(b)4:. Allowed lighting power may be traded from primary function areas using the Area Category Method to primary function areas using the Tailored Method.

E. No Trade-offs Between Indoor and Outdoor Areas
   1. Trading off lighting power allowances between indoor and outdoor areas shall not be permitted.

F. No Trade-offs Between Conditioned and Unconditioned Indoor Spaces
   1. Conditioned and unconditioned spaces shall be separate allotments, which shall be met separately without tradeoffs between the separate allotments.

5.2.2.3. Nonresidential Type of Use and Function Area Definitions

For the 2008 Standards, there have been a number of definition edits and additions that support and clarify the Types of Use found Table 146-E, and the Primary Function areas found in Tables 146-F and 146-G. refer to these definitions in §101 to determine how to classify a building type of use, or area primary function.

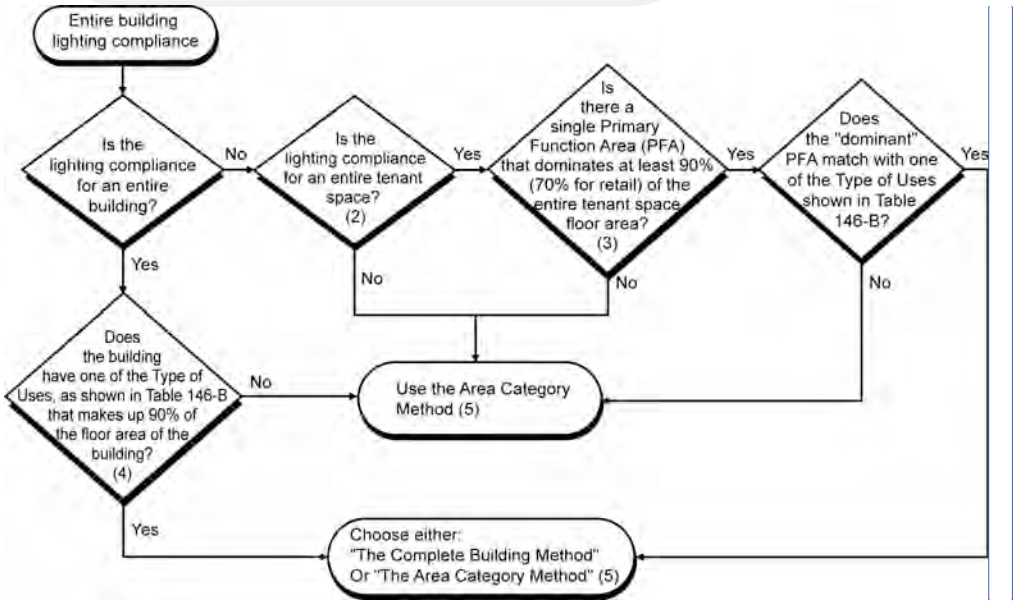

~~*Figure 0-1534-1013 – Lighting Power Density Calculation Flowchart. Complete Building Method and Area Category Method (1)*~~

5.2.3 Miscellaneous Applications

5.2.3.1 High Rise Residential Dwelling Units and Hotel/Motel Guest Rooms - General

§130(b), §150(k)
Chapter 6, Residential Manual

The *Standards* require that lighting in high-rise residential dwelling units and in hotel/motel guest rooms comply with all applicable lighting requirements of the low-rise residential standards.

High efficacy luminaires are required for almost all rooms in the dwelling unit or hotel guest room. Exceptions are made in some rooms if the fixtures are on a separate circuit or are controlled by occupancy switches or dimmers, depending on the type of room. The specific language for these requirements can be found in §150(k) of the 2008 standards.

The dwelling unit requirements apply only to permanently installed luminaires, i.e., luminaires that are part of the building, as opposed to portable luminaires such as torchieres or table lamps that are provided by the occupant. Permanently installed luminaires include ceiling fixtures, chandeliers, vanity lamps, wall sconces and any other type of luminaire that is a permanent part of the house.

Refer to Chapter 5 of the Residential Compliance Manual for additional information about the residential lighting requirements.

5.2.3.1 Theme Parks. Specialty lighting within theme parks are exempt from the lighting power density calculations in §146(c). However, all other lighting must comply with the Standards. The Standards must be enforced for primary function areas that are included in Standards Tables 146-E, F, or G. The primary function areas in theme parks must be quantified in Title 24 lighting documentation, and are not exempt from the lighting power density requirements. These include, retail, restrooms, restaurants, lobbies, ballrooms, theaters and other primary function areas in theme parks. The treatment of these primary function areas is no different for theme parks than for other building projects. However, the lighting that is used strictly for entertainment in theme parks, such as the entertainment production lighting related only to presenting the theme of the theme park, may be exempted from Title 24 lighting power density compliance. An example of a theme park may be a large amusement park, which includes carnival rides, shows, and exhibits.

5.2.3.2 Exit Way and Egress Lighting

Lighting that is required for exit signs subject to the California Building Code and has an input power rating of five watts per illuminated face or less, and exit way or egress illumination that is normally off and that is subject to the California

Building Code, is exempt from lighting power calculations in §146(c). Exit signs must meet the requirements of the Appliance Efficiency Regulations (Title 20).

Exit way and egress lighting systems are regulated by Article 700 of the State Electricity Code (Title 24, Part 3), which specifies that:

A. Emergency systems are those systems legally required and classed as emergency by municipal, state, federal, other codes, or by any governmental agency having jurisdiction.

B. These systems are intended to automatically provide illumination to designated areas in the event of failure of normal power supply.

C. These systems must be separately switched from the general lighting systems.

D. These systems shall be so arranged that only authorized persons have control of the emergency lighting.

E. These systems have an emergency power supply independent of the general lighting power supply, or are equipped with two or more separate and complete systems with independent power supply, each system providing sufficient current for emergency lighting purposes.

Note that §131(a) in the Standards, the area controls of the mandatory measures, specifies that lighting in areas within a building that must be continuously illuminated for reasons of building security or emergency egress are exempt from the switching requirements of the area controls of the mandatory measures for a maximum of 0.3 w/ft2. These lights must be installed in areas designated as security or emergency egress areas on the plans and specifications submitted to the enforcement agency in accordance with §10-103(a)2 of Title 24, Part 1, and must be controlled by switches accessible only to authorized personnel. The remaining lighting in the area, however, is still subject to the area switching requirements.

When applying lighting power adjustment factors in accordance with §146(a)2 to luminaires in a space, exit way, emergency, and egress lighting systems that have not been included in the lighting power calculations in §146(c), or are on a separate circuit and are not controlled by a qualifying control device, are not eligible for these credits.

5.2.3.3 Historic Buildings Exception 1 to §100(a) states that qualified historic buildings, as regulated by the California Historical Building Code (Title 24, Part 8 or California Building Code, Title 24, Part 2, Volume I, Chapter 34, Division II) are not covered by the Standards. However, non-historical components of the buildings, such as new or replacement mechanical, plumbing, and electrical (including lighting) equipment, additions and alterations to historic buildings, and new appliances in historic buildings may need to comply with Building Energy Efficiency Standards and Appliance Standards, as well as other codes. For more information about energy compliance requirements for Historic Buildings, see Section 1.7.1, Building Types Covered, in Chapter 1, the Overview of this manual.

5.3 Prescriptive Approach

In this section is information about the three prescriptive approaches for complying with the lighting Standards: Complete Building method, Area Category Method, and Tailored Method. Following, in section 5.3 is information about using the Tailored Method for complying with the lighting Standards.

5.3.1 Complete Building Method

§146~~(b)1~~(c)1
Table 146-~~B~~E

The complete building method can only be applied when all areas in the entire building are complete (i.e., lighting will be installed throughout the entire building under the permit for which the Title 24 compliance is prepared). The building must consist of one type of use for a minimum of 90% of the floor area of the entire building (in determining the area of the primary type of use, include the following areas if they serve as support for the primary type of use: lobbies, corridors, restrooms and storage closets). ~~Retail and wholesale store buildings shall use this method only if the merchandise sales function area is 70% or greater of the building area. There cannot be any unfinished areas. The retail and wholesale store type of use lighting power allowance shall be used only for single tenant retail and wholesale buildings, or for buildings with multiple tenants if it is known at the time of permit application that the buildings will be entirely made up of retail and wholesale stores. To qualify for retail and wholesale power allowances, documentation must be provided at the time of permitting indicating that the actual tenants are Retail Merchandise Sales and/or Wholesale Showroom tenants.~~
~~The allowed indoor lighting power density for conditioned and unconditioned spaces, such as parking garages and conditioned spaces, shall be separate allotments, which shall be met separately without tradeoffs between the separate allotments.~~

A. Complete Building Method Not Permitted. Retail and wholesale stores, hotels and motels, and high-rise residential buildings shall not use the Complete Building Method. These types of applications may use the Area Category Method or the Tailored Method for complying with the prescriptive lighting Standards. These areas may also use the Performance method for complying with the lighting Standards. See Section 5.4 for more information about the Performance method.

B. Multi-Use Buildings. Exception to 146(c)1: When using the Complete Building Method, if a Parking Garage and other Type of Use are part of a single building, the Parking Garage portion of the building and the remaining portion of the building shall each separately use the Complete Building Method Type of Use categories from Table 146-E. For example, if the bottom two stories of a five story office building is a parking garage, the top three stories can comply using the Office Building Type of Use, and the bottom two stories can comply using the Parking Garage Type of Use.

To determine the allowed lighting power, multiply the complete building conditioned floor area (see definition of conditioned floor area in §101 of the Standards) times the lighting power density for the specific building type, as found in Standards Table 146-~~B~~E.
~~**Note:** High-rise residential and hotel/motel buildings cannot use the complete building method.~~

C. Definition Clarifications. ~~Please n~~Note the distinction between the definitions of a Classroom Building and a School in §101:

Classroom Building is a building or group of buildings that is predominately classrooms used by an organization that provides instruction to students, which may include corridors and stairways, restrooms and small storage closets, faculty offices, and workshops and labs. A classroom building does not include buildings that are not predominantly classroom, including auditorium, gymnasium, kitchen, library, multi-purpose, dining and cafeteria, student union, maintenance staff workroom, or storage buildings.

School is a building or group of buildings that is used by an organization that provides instruction to students, which is predominately classroom buildings but may also include auditorium, gymnasium, kitchen, library, multi-purpose rooms, dining and cafeteria, student union, maintenance staff workroom, and small storage spaces.

Table 5-2 – Standards Table 146-E Complete Building Method Lighting Power Density Values (Watts/ft²)

TYPE OF USE	ALLOWED LIGHTING POWER
Auditoriums	1.5
Classroom building	1.1
Commercial and industrial storage buildings	0.6
Convention centers	1.2
Financial institutions	1.1
General commercial and industrial work buildings	
High bay	1.0
Low bay	1.0
Grocery stores	1.5
Library	1.3
Medical buildings and clinics	1.1
Office buildings	0.85
Parking Garages	0.3
Religious facilities	1.6
Restaurants	1.2
Schools	1.0
Theaters	1.3
All others	0.6

DRAFT

Example 5-10

Question
A 10,000-ft² medical clinic building is to be built. What is its allowed lighting power under the complete building approach?

Answer
From Table 146-B in the Standards, medical buildings and clinics are allowed 1.1 w/ft^2. The allowed lighting power is 10,000 x 1.1 = 11,000 W.

5.3.2 Area Category Method

§146~~(b)2~~(c)2
Table 146-~~C~~F

The area category method is more flexible than the complete building method because it can be used for multiple tenants or partially completed buildings. For purposes of the area category method, an "area" is defined as all contiguous spaces that accommodate or are associated with a single primary function as listed in Standards Table 146-~~C~~F. Areas not covered by the current permit are ignored. When the lighting in these areas is completed later under a new permit the applicant may show compliance with any of the lighting options except the complete building method.

The area category method divides a building into primary function areas. Each function area is defined under occupancy type in §101 in the Standards and in Joint Appendix I. The allowed lighting power is determined by multiplying the area of each function times the lighting power density for that function. Where areas are bounded or separated by interior partitions, the floor space occupied by those interior partitions shall be included in any area. The total allowed watts is the summation of the allowed lighting power for each area covered by the permit application.

When using this method, each function area in the building must be included as a separate area. Boundaries between primary function areas may or may not consist of walls or partitions. For example, kitchen and dining areas within a fast food restaurant may or may not be separated by walls. Also, it is not necessary to separate aisles or entries within primary function areas. However, when the area category method is used to calculate the allowed total lighting power for an entire building, the main entry lobbies, corridors, restrooms, and support functions shall be treated as separate areas.

When using this method, the public and common areas of Multifamily, Dormitory, and Senior Housing refers to exercise rooms, lobbies, hallways, corridors, and stairwells. Square footage of the dwelling units shall not be used to determine the square footage of the common areas. The dwelling units of Multifamily, Dormitory, and Senior Housing shall comply with the applicable lighting requirements in §150(k).

The Transportation Function refers to the ticketing area, waiting area, baggage handling areas, concourse, or other areas not covered by primary functions in Table 146-C in an airport terminal, bus or rail terminal or station, subway or transit station, or a marine terminal.

If at the time of permitting a tenant is not identified for a multi-tenant space, the tenant leased space allowance from Standards Table 146-~~C~~F must be used. For example, in a strip mall or other malls, if at the time of permitting a tenant is not identified for a space, the tenant lease space allowance and not the retail merchandise sales must be used. To qualify for a power allowance other than Tenant Lease Space, documentation must be provided to indicate the actual tenant and their type of business at the time of permitting.

Transferring lighting power from one area to another is acceptable only for areas for which lighting plans are being submitted and lighting is being installed as part of the same approved permit. Areas not proposed for lighting improvements are left out both on the allowance side and the installed power side. Allowed and proposed lighting calculations for unconditioned and conditioned spaces must be kept separate, with no trade-offs between the two.
Figure ~~Figure Error! No text **of specified style in document. 15**Figure Error! No text **of specified style in document. 13**Figure 0-16Figure 3-11Figure 4-14~~ shows a function area that has interior, non-bounding partitions (dotted) and bounding partitions (solid). The area is calculated by multiplying the width times the depth, as measured from the center of the interior bounding partitions. If the function area is bounded by exterior walls on one or more sides, the area is calculated by multiplying the width times the depth, as measured from the inside surface of the exterior walls to the center of the interior bounding partitions. If there are no partitions separating the boundary of the function areas on one or more sides, the boundary of the area is determined by a line separating the function areas where no bounding partitions exist. Examples of interior bounding partitions are permanent full height partitions and walls. Movable partitions such as office cubicles partitions and temporary partitions in retail sales areas are not considered interior bounding partitions.

Note that no tradeoffs are allowed between areas that are located within the conditioned floor area of a building and areas that are located in unconditioned areas or outdoor areas. For example, from Standards Table 146-~~C~~F, the lighting power allowance for an unconditioned parking garage is ~~0.4~~0.2 w/ft^2, and no tradeoffs with the conditioned areas or outdoor lighting are available to increase the lighting power allowance above ~~0.4~~0.2 w/ft^2.

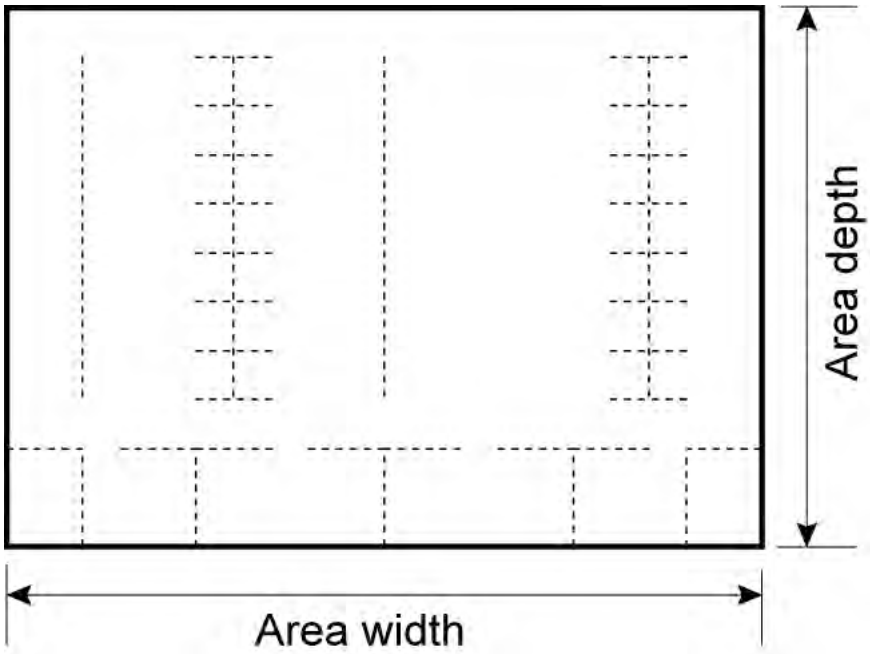

Figure 5-15 – Calculating Lighting Area

~~*Chandeliers and Sconces (*)*~~

~~*§146(b)3.iii*~~

~~Certain function areas use decorative lighting in the form of ornamental chandeliers or sconces. Areas shown in Table 146-C in the Standards, with a single asterisk (*) qualify for an additional lighting allotment of up to 1.0 w/ft².~~ ~~The additional power for chandeliers and/or sconces is a use-it-or-loose-it allowance that may be added to the allowed lighting power under the area category method. Ornamental chandeliers are ceiling-mounted or suspended decorative luminaires that use glass crystal, ornamental metal or other decorative materials. Sconces are wall mounted decorative lighting fixtures.~~

DRAFT

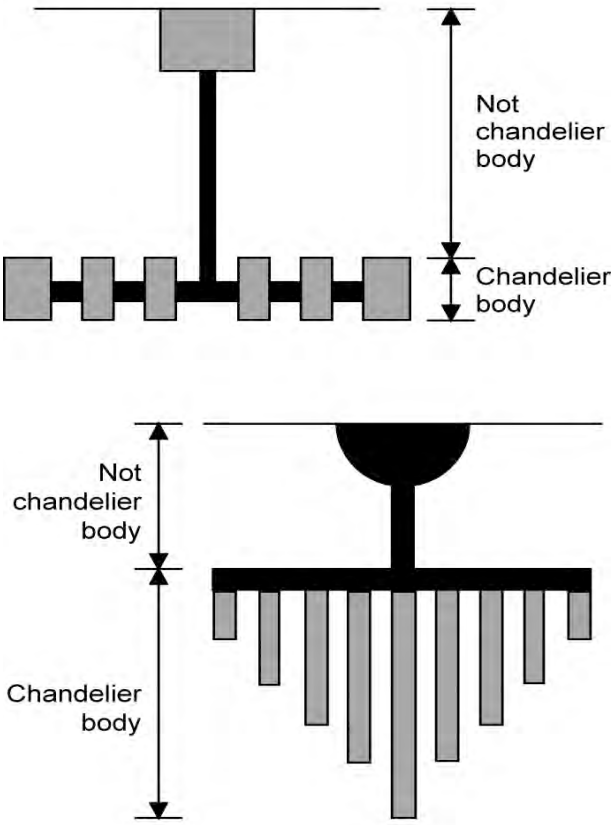

~~*Figure 0-1734-1215 – Chandelier Dimensions*~~

~~*Specialized Work Tasks (**)*~~

~~The spaces in Table 146-C in the Standards that are marked with two asterisks (**) may qualify for additional lighting power if the plans clearly identify special visual tasks and special lighting equipment is shown on the plans to provide illumination for these tasks. Tasks that are performed less than two hours per day or poor quality tasks that can be improved are not eligible for this specialized task work allowance.~~

~~The additional allowance is either 0.5 w/ft² times the area of the task space required for an art, craft assembly or manufacturing operation; or the actual design wattage of the luminaire(s) providing illuminance to the specialized task area. The area or location of each specific task must be shown on the plans. This is a use-it-or-lose-it allowance.~~

~~*Precision Commercial and Industrial Work (***)*~~

~~The spaces in Table 146-C in the Standards that are marked with three asterisks (**) may qualify for additional lighting power if the plans clearly identify special visual tasks and special lighting equipment to provide illumination for these tasks. Tasks that are~~

~~performed less than two hours per day or poor quality tasks that can be improved are not eligible for this specialized task work allowance.~~

~~The additional allowance is either 1.0 W/ft² times the area of the task space required for the precision work or the actual design wattage of the luminaire(s) providing illuminance to the specialized task area. The area or location of each specific task must be shown on the plans. This is a use-it-or-lose-it allowance.~~

A. Footnotes to Table 146-F

For some function areas in Table 146-F are footnote indicators of [1], [2], [3]. or [4]. At the bottom of Table 146-F are the footnotes. The allowances are informally called "use-it-or-lose-it" allowances because these additional allowances are always the smaller of the listed numeric value in W/ft^2 or the actual design.

When there is a footnote for a Primary Function area in Table 146-F, additional lighting power allowances are available as follows:

1. Footnote [1] is shown only after the following Primary Function areas:
   a. Auditorium
   b. Civic Meeting Place
   c. Convention, conference multipurpose and meeting centers
   d. Dining
   e. Financial Transactions
   f. Hotel Function Area
   g. Hotel Lobby
   h. Main Entry Lobby
   i. Malls and Atria
   j. Religious Worship
   k. Theater – Motion Picture
   l. Theater – Performance
   m. Waiting Area

For all of the Primary Function areas in Table 146-F with footnote [1], The smallest of the following values may be added to the allowed lighting power for ornamental chandeliers and sconces that are in addition to and switched or dimmed on circuits different from the circuits for general lighting:

i. 1.0 W/ft^2 times the area of the task space that the chandelier or sconce is in; or
ii. The actual design wattage of the chandelier or sconce.

2. Footnote [2] is shown only after the following Primary Function areas:
   a. Auto Repair
   b. Electrical, Mechanical, Telephone Rooms
   c. Low Bay and High Bay General Commercial and Industrial Work

For all of the Primary Function areas in Table 146-F with footnote [2], The smallest of the following values may be added to the allowed lighting power for specialized task work:

i. 0.5 W/ft^2 times the area of the task space required for an art, craft assembly or manufacturing operation; , or
ii. The actual design wattage of the luminaire(s) providing illuminance to the specialized task area.

For spaces employing this allowance, the plans shall clearly identify all task spaces using these tasks and the lighting equipment designed to illuminate these tasks. Tasks that are performed less than two hours per day or poor quality tasks that can be improved are not eligible for this specialized task work allowance.

3. Footnote [3] is shown only after Precision General Commercial and Industrial Work

The smallest of the following values may be added to the allowed power for precision commercial and industrial work:

i. 1.0 W/ft^2 times the area of the task space required for the precision work; , or
ii. The actual design wattage of the luminaire(s) providing the illuminance to the precision task area.

For spaces employing this allowance, the plans shall clearly identify all task spaces using these tasks and the lighting equipment designed to illuminate these tasks. Tasks that are performed less than two hours per day or poor quality tasks that can be improved are not eligible for this precision task work allowance.

4. Footnote [4] is shown only after Laboratory, Scientific

The smallest of the following values may be added to the allowed lighting power for specialized task work in a Scientific Laboratory:

i. 0.2 W/ft^2 times the area of the task space required for a lab in a school, or
ii. The actual design wattage of the luminaire(s) providing illuminance to the specialized task area.

DRAFT

Example 5-11

Question
A small bank building has the following area distribution:

Corridors	800 ft^2
Main Entry Lobby	200 ft^2
Financial Transactions	1,200 ft^2
Manager's Office	200 ft^2

What is the allowed lighting power for this building under the area category method?

Answer

The following Lighting Power Densities apply (from Table 146-C in the Standards):

Space	LPD	Area	Allowed Watts
Corridors	0.6 W	800 ft^2	480
Main Entry	1.5 W	200 ft^2	300
Financial Transactions	1.2 W	1200 ft^2	1440
Manager's Office	1.~~2~~1 W	200 ft^2	~~240~~220
Total			~~2460~~2440 W

Financial Transactions in this example are assumed to include all the spaces in which financial transactions for the public are taking place. The allowed lighting power for this building is ~~2460~~2440 W.

Example 5-12

Question

A 10,000-ft^2 multi-use building is to be built consisting of:

A) 500 ft^2 main entry lobby,
B) 2,000 ft^2 corridors and restroom,
C) 3,000 ft^2 grocery store,
D) 2,500 ft^2 retail, and
E) 2,000 ft^2 future development.

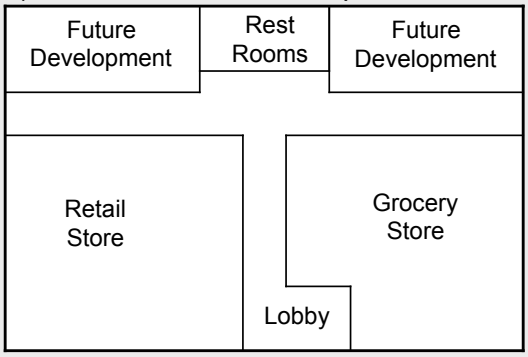

What is the allowed lighting power under the area category method?

Answer

Space	LPD	Area	Allowed Watts
A) Main Entry	1.5 W/ft²	500 ft²	750
B) Corridors and Restrooms	0.6 W/ft²	2,000 ft²	1,200
C) Grocery Sales	1.6 W/ft²	3,000 ft²	4,800
D) Retail Store	~~1.7~~1.6 W/ft²	2,500 ft²	~~4,250~~ 4000
TOTAL		8,000 ft²	~~11,000~~10,750

with 2,000 ft² for future development.

Example 5-13

DRAFT

Question
What is the wattage allowance for a 10 cubic foot chandelier with 5-50 W lamps in a 300 ft² bank entry lobby?
Answer
The wattage based on the task space is 1 W/ft² x 300 ft² = 300 W
The wattage based on actual design watts is 250 W.
The wattage allowance for the chandelier is the smaller of the two values, or 250 W.

DRAFT

~~Table 034-3 – Standards Table 146-CF Area Category Method - Lighting Power Density Values (Watts/ft²)~~

~~PRIMARY FUNCTION~~	~~ALLOWED LIGHTING POWER~~
~~Auditorium~~	~~1.5*~~
~~Auto repair~~	~~1.1 **~~
~~Classrooms, lecture, training, vocational room~~	~~1.2~~
~~Civic Meeting Place~~	~~1.3*~~
~~Commercial and industrial storage~~	~~0.6~~
~~Convention, conference, multipurpose and meeting centers~~	~~1.4*~~
~~Corridors, restrooms, stairs and support areas~~	~~0.6~~
~~Dining~~	~~1.1*~~
~~Electrical, mechanical rooms~~	~~0.7 **~~
~~Exercise center, gymnasium~~	~~1.0~~
~~Exhibit, museum~~	~~2.0~~
~~Financial transactions~~	~~1.2*~~
~~General commercial and industrial work~~	
~~High bay~~	~~1.1**~~
~~Low bay~~	~~1.0 **~~
~~Precision~~	~~1.3 ***~~
~~Grocery sales~~	~~1.6~~
~~Housing, Public and Commons Areas~~	
~~Multi-family~~	~~1.0~~
~~Dormitory, Senior Housing~~	~~1.5~~
~~Hotel function area~~	~~1.5*~~
~~Kitchen, food preparation~~	~~1.6~~
~~Laundry~~	~~0.9~~
~~Library~~	
~~Reading areas~~	~~1.2~~
~~Stacks~~	~~1.5~~
~~Lobbies~~	
~~Hotel lobby~~	~~1.1*~~
~~Main entry lobby~~	~~1.5*~~
~~Locker/dressing room~~	~~0.8~~
~~Lounge/recreation~~	~~1.1~~
~~Malls and atria~~	~~1.2*~~
~~Medical and clinical care~~	~~1.2~~
~~Office~~	~~1.2~~
~~Parking garage~~	~~0.4~~
~~Religious worship~~	~~1.5*~~
~~Retail merchandise sales, wholesale showrooms~~	~~1.7~~
~~Tenant lease space~~	~~1.0~~
~~Transportation function~~	~~1.2~~
~~Theaters~~	

DRAFT

~~PRIMARY FUNCTION~~	~~ALLOWED LIGHTING POWER~~
~~Motion picture~~	~~0.9*~~
~~Performance~~	~~1.4*~~
~~Waiting area~~	~~1.1*~~
~~All other~~	~~0.6~~

~~** The smallest of the following values may be added to the allowed lighting power for ornamental chandeliers and sconces that are switched or dimmed on circuits different from the circuits for general lighting:~~

~~*a. One watt per square foot times the area of the task space that the chandelier or sconce is in; or*~~

~~*b. The actual design wattage of the chandelier or sconce.*~~

~~*** The smallest of the following values may be added to the allowed lighting power for specialized task work.*~~

~~*a. One half watt per square foot times the area of the task space required for an art, craft assembly or manufacturing operation is performed). For spaces employing this allowance, submit plans under §10-103 of Title 24, Part 1 clearly identifying all task spaces for using this task and the lighting equipment designed to illuminate them. Tasks that are performed less than two hours a day, or poor quality tasks that can be improved shall not be employed to justify use this allowance.*~~

~~*b. The actual design wattage of the luminaire (s) providing illuminance to the task area(s).*~~

~~**** The smallest of the following values may be added to the allowed lighting power for precision commercial or industrial work*~~

~~*a. One watt per square foot times the area of the task space required for the precision work. For spaces employing this allowance, submit plans under §10-103 of Title 24, Part 1 clearly identifying all task spaces for using this task and the lighting equipment designed to illuminate them. Tasks that are performed less than two hours a day, or poor quality tasks that can be improved shall not be employed to justify use this allowance.*~~

~~*b. The actual design wattage of the luminaire (s) providing illuminance to the task area(s)*~~

DRAFT

DRAFT

Table 5-3 – Standards Table 146-F Area Category Method - Lighting Power Density Values (Watts/ft²)

PRIMARY FUNCTION		ALLOWED LIGHTING POWER (W/ft²)	PRIMARY FUNCTION		ALLOWED LIGHTING POWER (W/ft²)
Auditorium		1.5 [1]	Laboratory, Scientific		1.4 [4]
Auto Repair		0.9 [2]	Laundry		0.9
Beauty Salon		1.7	Library	Reading areas	1.2
Civic Meeting Place		1.3 [1]		Stacks	1.5
Classrooms, lecture, training, vocational room		1.2	Lobbies	Hotel lobby	1.1 [1]
Commercial and industrial storage (conditioned. & unconditioned.)		0.6		Main entry lobby	1.5 [1]
Commercial and industrial storage (refrigerated)		0.7	Locker/dressing room		0.8
Convention, conference, multipurpose and meeting centers		1.4 [1]	Lounge/recreation		1.1
Corridors, restrooms, stairs, and support areas		0.6	Malls and atria		1.2 [1]
Dining		1.1 [1]	Medical and clinical care		1.2
Electrical, mechanical, telephone rooms		0.7 [2]	Offices	> 250 square feet	0.9
Exercise center, gymnasium		1.0		≤ 250 square feet	1.1
Exhibit, museum		2.0	Parking garage	Parking Area	0.2
Financial transactions		1.2 [1]		Ramps and Entries	0.6
General commercial and industrial work	Low bay	1.0 [2]	Religious worship		1.5 [1]
	High bay	0.9 [2]	Retail merchandise sales, wholesale showrooms		1.6
	Precision	1.2 [3]	Tenant lease space		1.0
Grocery sales		1.6	Theaters	Motion picture	0.9 [1]
Hotel function area		1.5 [1]		Performance	1.4 [1]
Housing, Public and Commons Areas	Multi-family, Dormitory	1.0	Transportation Function		1.2
	Senior Housing	1.5	Waiting area		1.1 [1]
Kitchen, food preparation		1.6	All other		0.6

FOOTNOTES

1 The smallest of the following values may be added to the allowed lighting power for ornamental chandeliers and sconces that are in addition to and switched or dimmed on circuits different from the circuits for general lighting:

a. One watt per square foot times the area of the task space that the chandelier or sconce is in; or

b. The actual design wattage of the chandelier or sconce.

2. The smallest of the following values may be added to the allowed lighting power for specialized task work

a. 0.5 watt per square foot times the area of the task space required for an art, craft assembly or manufacturing operation; , or

b. The actual design wattage of the luminaire(s) providing illuminance to the specialized task area

For spaces employing this allowance, the plans shall clearly identify all task spaces using these tasks and the lighting equipment designed to illuminate these tasks. Tasks that are performed less than two hours per day or poor quality tasks that can be improved are not eligible for this specialized task work allowance.

3. The smallest of the following values may be added to the allowed power for precision commercial and industrial work:

a. One watt per square foot times the area of the task space required for the precision work; , or

b. The actual design wattage of the luminaire(s) providing the illuminance to the precision task area.

For spaces employing this allowance, the plans shall clearly identify all task spaces using these tasks and the lighting equipment designed to illuminate these tasks. Tasks that are performed less than two hours per day or poor quality tasks that can be improved are not eligible for this precision task work allowance.

4 The smallest of the following values may be added to the allowed lighting power for specialized task work:

a. 0.2 watt per square foot times the area of the task space required for a lab in a school, or

b. The actual design wattage of the luminaire(s) providing illuminance to the specialized task area

DRAFT

5.3.3 Tailored Method

§146~~(b)3~~(c)3
Table 146-G

The 2008 version of Title 24 allows use of Tailored Method of compliance for most buildings and spaces without the 30% floor area restriction that was part of Title 24-2005. Use of Tailored compliance is appropriate when the building or space has function types which are allowed display and/or ornamental lighting. It may also be helpful when a building and/or areas have spaces with higher room cavity ratios (RCR's) such as those with an RCR of 3.5 or higher. Tailored compliance has several components (wall display, floor display, ornamental and very valuable display lighting) that are "Use it or lose it" allowances. Therefore, if a lighting design does not include these components, the allowed wattage under the Tailored Method of compliance may actually be less than if the Area Method or Whole Building Method of compliance is used.

~~For occupancies such as retail merchandise sales, exhibit/ museum and the maximum allowed lighting power is determined for each space or activity when the tailored method is used.~~

~~In general, the tailored method can only be used for spaces whose combined area does not exceed 30% of the entire building that is otherwise using the area category method. However, the tailored method may be used for up to 100% of the entire building area of retail merchandise sales and exhibit/museum. Also, if a single function area within the building exceeds 30% of the floor area of the entire building, the tailored method may be used for that entire function area alone, with the remaining spaces using the area category method. To qualify for a tailored power allowance, documentation must be provided at the time of permitting to indicate the actual building or tenant space occupant and their type of business or activity.~~

~~The tailored method and the area category method cannot be used for the same floor area. The floor area for calculations based on the tailored method must be subtracted from the floor area for the remainder of the building lighting calculations.~~

~~Trade-offs of lighting power between the tailored method and area category methods are not allowed.~~

~~The difference between the tailored method and the area category method is that the tailored method takes into account each task activity in each enclosed space or task area as the basis for determining the lighting power allotment (as opposed to functional areas, which may have several different tasks). Because the tailored method is based on task activities, this method requires the most detail on the plans, and in some cases, requires documentation of the actual lighting tasks. The tailored method may allow more lighting power than the other two methods when it is justified.~~

~~The task allotments are defined in terms of the illuminance category for each task. The Illuminating Engineering Society of North America (IESNA) uses illuminance category and foot-candle levels for determining design lighting levels. Because the task allotments are based on the same categories as the IESNA design lighting levels, this method allows designers to translate their design parameters directly into allowed lighting power levels.~~

~~When using this method, the public and common areas of high-rise Multifamily buildings refer to exercise rooms, hallways, lobbies, corridors, and stairwells.~~

~~The Transportation Function refers to the ticketing area, waiting area, baggage handling areas, concourse, or other areas not covered by primary functions in In an airport terminal, bus or rail terminal or station, subway or transit station, or a marine terminal, the Transportation Function refers to the ticketing area, waiting area, baggage handling areas, concourse, or other areas not covered by primary functions in Table 146-C 146-F in an airport terminal, bus or rail terminal or station, subway or transit station, or a marine terminal.~~

Allowed lighting power may be traded from Primary Function areas using the Area Category Method to Primary Function areas using the Tailored Method. However, trade-offs may not be traded from the Tailored Method to the Area Category Method.

In 2008, some of the Primary Function areas in Table 146-G have been renamed, and some of the Primary Function area definitions have been edited and clarified. Refer to the definitions in §101 to appropriately classify a primary function area according to the current definitions.

Note: As a reminder, in many buildings the tailored method may actually result in less allowed lighting power than other methods. Larger allowances generally result from special lighting needs in a substantial portion of the building or from control credits.

~~*Determining Illuminance Categories*~~

~~*§146(b)3*~~ ~~*Table 146-D 146-G*~~

~~The first step in identifying the allowed lighting power when using the tailored method is to determine the illumination category (IESNA illuminance category) for each task. Illumination categories are determined according to the task activity that will be performed. For each task, the appropriate illuminance category is found either in Table 146-D 146-G in the Standards or in tables and procedures found in the IESNA Handbook, Ninth Edition (IESNA HB).~~
~~Some primary functions in column 2 are assigned a specific illumination category, while others are referred to the IESNA HB. For the primary functions that refer to IESNA HB, use the IESNA HB to determine the illumination category. If there are more than one IESNA illumination categories for a given primary function, use the one that most closely matches the actual function of the space.~~
~~Selection of each illumination category not listed in Standards Table 146-D 146-G (ones that refer to IESNA HB) must be supported by a justification on the plans.~~
~~Note that the primary functions that are assigned a specific illumination category in column 2 are those that are generally allowed one or more special allowances, such as wall, floor, ornamental, and very valuable display allowances. By contrast, there are no special display lighting allowances in Table 146-D 146-G for those primary functions that are referred to the IESNA HB.~~

~~**Note:** All illumination categories E and higher require special consideration. See explanatory sections on following pages.~~

~~*Determining LPD Values*~~

~~After determining the illuminance category, the next step is to find the lighting power density (LPD), in watts per square foot (w/ft²) or watts per linear foot (w/lf), for each category. The LPD is selected from Table 146-F 146-I in the Standards and depends on the illuminance category, which is defined either in Standards Table 146-D 146-G or in the IESNA Handbook and the room cavity ratio (RCR) of the space (see below).~~

A. Room Cavity Ratio (RCR)

~~For the tailored method, the maximum adjusted LPD assigned to illuminance categories A through G depends on the RCR of the space. See Table 146-F 146-G in the Standards.~~

The room cavity ratio must be determined for a space using the Tailored Lighting Method.

The lighting level in a room is affected by the amount of light its fixtures provide and by the configuration of the room, expressed as the room cavity ratio (RCR). Small cramped rooms are more difficult to light and have a high RCR. Large open rooms are easier to light and have a low RCR. Since lighting fixtures are not as effective in a room with a high RCR, the Standards allow a greater LPD to compensate for this effect.

The RCR is based on the entire space bounded by floor-to-ceiling partitions. If a task area within a larger space is not bounded by floor to ceiling partitions, the RCR of the entire space must be used for the task area. The exception to this rule allows for imaginary or virtual walls when the boundaries are established by "high stack" elements (library stacks and storage shelves) or high partial walls defined as "perimeter full height partitions" described in section 146-B.-i wall display.

Note: For use in calculating the RCR of the space the walls are not required to be display walls as is required under 146-B.-i of the code.

The RCR is calculated from one of the following formulas:

Rectangular Shaped Rooms

$$RCR = \frac{5 \times H \times (L + W)}{A}$$

Where:

RCR = The room cavity ratio

H = The room cavity height, vertical distance measured from the work plane to the center line of the lighting fixture

L = The room length

W = The room width

A = The room area

Non-Rectangular Shaped Rooms

$$RCR = \frac{[2.5 \times H \times P]}{A}$$

Where:

RCR = The room cavity ratio

H = The room cavity height (see equation above)

A = The room area

P = The room perimeter

A = The room area

These two methods yield the same result and the second more general form of calculating RCR may be used in all instances, if desirable.

It is not necessary to ~~calculate~~ document RCR values for rooms with an RCR less than 3.5. Rooms with a RCR higher than 3.5 are allowed higher LPDs under the tailored method. Table ~~Table Table Table 3-4~~ gives typical RCR values calculated for rooms with the task surface at desk height (2.5 ft above the floor). This table is useful in assessing whether or not a room is likely to have an RCR greater than 3.5.

A special situation occurs when illuminating stacks of shelves in libraries, warehouses, and similar spaces. In this situation, the lighting requirements are to illuminate the vertical stack rather than the horizontal floor area (see example below). In stack areas the RCR is assumed to be greater than seven. The non-stack areas are treated normally.

DRAFT

Table 5-4 – Typical RCRs

(Task Height 2.5 ft Above Floor, for Flush/Recessed Luminaires)

Room Length (ft)	Room Width (ft)				
	8	12	16	20	24
5	8.9	7.8	7.2	6.9	6.6
8	6.9	5.7	5.2	4.8	4.6
12	. . .	4.6	4.0	3.7	3.5
16	. . .	. . .	3.4	3.1	3.0
20	. . .	. . .	. . .	2.8	2.5
24	. . .	. . .	. . .	. . .	2.3
Room Cavity Height = 5.5 ft (eight feet from floor to luminaire)					
5	12.2	10.6	9.8	9.4	9.1
8	9.4	7.8	7.0	6.6	6.3
12	. . .	6.3	5.5	5.0	4.7
16	. . .	. . .	4.7	4.2	3.9
20	. . .	. . .	. . .	3.8	3.4
24	. . .	. . .	. . .	. . .	3.1
Room Cavity Height = 7.5 ft (ten feet from floor to luminaire)					

B. Calculate Allowed General Lighting Power

§146(b)3
Table ~~146-D~~ 146-G

The Tailored Method shall be used only on projects with primary function areas that do not use the Area Category Method.

For all spaces using the Tailored Method, determine the general lighting power allowance according to §146(c)3A, as follows:

1. Determine Illuminance Category
   a) If a specific IESNA Illuminance Category is listed in Column 2 (shown as capital letters B through E) of Table 146-G, then such illuminance category shall be used.
   b) If "IESNA HB" is listed in Column 2 of Table 146-G, determine the illuminance category for each lighting primary function type according to categories specified in the Ninth Edition of the IESNA Lighting Handbook (IESNA HB) using the "Design Guide" for illuminance.
   c) When using the IESNA HB, tasks that are performed less than two hour a day, or poor quality tasks that can be improved shall not be employed to justify the use of illuminance categories E, F, or G.

2. Determine Area.
   a) Determine the area of each primary function using the Tailored Method.

b) Areas that use the Area Category Method shall not be used to determine Tailored Method areas.

3. Determine RCR (discussed in previous section)
   a) Determine the room cavity ration (RCR) for each primary function area.
   b) The RCR shall be calculated using either Equation 146-G or Equation 146-H.

4. Calculate Allowed General Lighting Power
   a) Multiply the area of each primary function by the allowed lighting power density for the illuminance category and RCR for each primary function area according to Table 146-I.
   b) The product or the actual installed lighting power for the primary function, whichever is less is the Allowed General Lighting Power for the space.

~~*C.1. General Lighting Power Allowance*~~

~~There are two types of lighting power allowances under the tailored method: the general lighting power allowance (column 2 of Standards Table 146-D 146-G or IESNA Handbook) and specific lighting power allowances (columns 3-5 of Standards Table 146-D 146-G).~~

~~The general power lighting power allowance is determined in accordance with paragraphs 1-6 below:~~

- ~~If a specific IESNA Illuminance Category is listed in Column 2 of Standards Table 146-D 146-G, then such illuminance category must be used. Otherwise, determine the category for each lighting task according to categories specified in the IESNA Lighting Handbook (IESNA HB), using the "Design Guide" for illuminance. It is permissible to have more than one task type in a space. For spaces employing tasks E, F, or G, submit plans under §10-103 of Title 24, Part 1 clearly identifying all task spaces for such categories and the lighting equipment designed to illuminate them. Tasks that are performed less than two hours a day, or poor quality tasks that can be improved cannot be employed to justify use of E, F, or G.~~
- ~~Determine the area of each task. Areas without tasks shall be identified as non-task. The total of all task areas and non-task areas must be equal to the area of the space.~~
- ~~Determine the room cavity ratio (RCR) and area of each space. The RCR must be calculated using either Standards Equation 146-D 146-G or Equation 146-E 146-H.~~
- ~~Multiply the area of each task by the allowed lighting power density for the task according to Standards Table 146-F 146-I.~~

~~The product, or the actual installed lighting power for the task, whichever is less, is the allowed lighting power for the task.~~

- ~~For non-task areas, the allowed lighting power density shall be 50% of the adjacent task area or that permitted for Category D, whichever is lower. Multiply the non-task area by the allowed lighting power density.~~

1. ~~Add the allowed lighting power of all tasks and non-task areas. This is the allowed general lighting power for the space.~~

~~C.2. Specific Lighting Power Allowance~~Determine Additional Allowed Power

~~Specific lighting power allowances include wall display power (W/ft) (W/ft column 3 from Table 146-G), allowed floor display power (W/ft² column 4 from Table 146-G), allowed and ornamental/special effect lighting (W/ft² column 5 from Table 146-G). Also and allowed very valuable display power (W/ft2) (columns 3-6 of Standards Table 146-D). for retail, museums and religious worship.~~

~~Wall Display Power~~

~~Some of the primary functions listed in Table 146-D 146-G in the Standards are allowed additional lighting power for wall displays. The allowance is determined by multiplying the value in Standards Table 146-D 146-G (in watts per linear foot) by the length of display walls (in feet) that surround the space. This is a use-it-or-lose-it allowance so the allowance is the lesser of the allowed power or the installed power.~~

~~The length of display walls may include perimeter walls, including closable openings and permanent full height interior partitions. The wall display allowance may be adjusted for luminaire mounting heights that are greater than 13 ft 11-foot 6-inches above the finished floor (see Table 146-E 146- H in the Standards).~~

~~Qualifying wall lighting systems shall be mounted within 6 ft of 10 feet of the wall and shall be of a lighting system type appropriate for wall lighting. Suitable lighting systems include lighting tracks, wallwashers, valance lights, cove lighting, or adjustable accent light including adjustable or fixed luminaires with PAR, R, MR, AR or other projector lamp types.~~

~~Allowed Floor Display Power~~

~~Some of the primary functions listed in Table 146-D 146-G in the Standards are allowed additional lighting power for floor displays. The allowance is determined by multiplying the power allowance in Standards Table 146-D 146-G (w/ft²) by the total area of the~~

~~space. This is a use-it-or-lose-it allowance so the allowance is the lesser of the allowed power or the installed power.~~

~~The floor display allowance may be adjusted for luminaire mounting heights that are greater than 13 ft 11-foot 6-inches above the finished floor (see Table 146-E 146-H in the Standards).~~

~~Qualifying floor display lighting systems shall be mounted no closer than 6 ft 2-feet to a wall and shall be a lighting system type such as track lighting, adjustable or fixed luminaires with PAR, R, MR, AR, or other projector lamp types or employing optics providing directional display light from non-directional lamps.~~

~~Except for lighting for very valuable merchandise that is external to display cases as defined below, lighting mounted inside of display cases shall also be considered floor display lighting.~~

~~*Allowed Ornamental/Special Effect Lighting*~~

~~Some of the primary functions listed in Table 146-D 146-G in the Standards are allowed additional lighting power for ornamental or special effects lighting. The allowance is determined by multiplying the power allowance in Standards Table 146-D 146-G (w/ft²) by the total area of the space. This is a use-it-or-lose-it allowance so the allowance is the lesser of the allowed power or the installed power.~~

~~Qualifying ornamental luminaires include chandeliers, sconces, lanterns, neon and cold cathode, light emitting diodes, theatrical projectors, moving lights, and light color panels when used in a decorative manner that does not serve as display lighting.~~

~~Ornamental/special effects lighting shall not be the only light source in the space.~~

~~*Allowed Very Valuable Display Power (W/ft²)*~~

~~Some of the primary functions listed in Table 146-D in the The Standards are allowed allow additional lighting power for the display of very valuable merchandise. Typical spaces are in museums, religious facilities and retail stores. The allowance is the smaller of the product of power allowance in Standards Table 146-D (w/ft²) and of 1 w/ft² times the area of the space, or multiplying 16 w/ft² times the area of the display case. by 20 w/ft². This is a use-it-or-lose-it allowance so the allowance is the lesser of the allowed power or the installed power.~~

~~Qualifying lighting includes internal display case lighting or external lighting employing highly directional luminaires specifically designed to illuminate the case or inspection area without spill light. To qualify for this allowance, cases shall contain jewelry, coins, fine china or crystal, precious stones,~~

~~silver, small art objects and artifacts, and/or valuable collections the selling display of which involves customer viewer inspection of very fine detail from outside of a locked case. Mounting Height Adjustment~~

~~When a space requires that luminaires for wall or floor display lighting be mounted at a height of 13 ft greater than 11-foot 6-inches or higher, additional lighting power is permitted. Table 146-E 146-H in the Standards lists mounting height adjustments for various mounting heights. The appropriate multiplier is applied to the power allowance for wall or floor display lighting shown in Standards Table 146-D 146-G.~~

~~When there is more than one mounting height condition, they should must be separated into different task areas for purposes of applying the mounting height adjustments. The boundaries of these separate areas should be clearly shown on the plans, and the mounting height in each should also be shown with a section diagram.~~

~~*Determining Area of a Task Primary Function*~~

~~In order to determine the allowed lighting power, the task areas primary function areas need to be identified. For illuminance categories A, B, C D, E, F, and G, the task function areas are the areas of each task function space that has a separate illuminance requirement. If the task function area in bounded by walls or partitions, then the area of each task space function area is determined by measuring the dimensions from inside the bounding partitions. The area is calculated by multiplying the width times the depth, as measured from the inside of the bounding partitions. The floor area occupied by the interior partitions is not included in the floor area of the function area. However, if the task function area is not bounded by walls and partitions, then the actual area of the task function may be used to determine the allowable power.~~

~~*Determining Allowed Watts*~~

~~After the LPD and task for the primary function area is assigned to each space or task primary function area is established, the allowed watts may be calculated. There are two cases for allowed watts:~~

- ~~For illuminance categories A through D and for the gross sales floor area, the allowed watts are calculated simply by multiplying the LPD (w/ft²) by the area of the space (ft²).~~
- ~~For illuminance categories E through I, gross sales wall areas and feature floor displays, and very valuable display cases the allowed watts are the lesser of: the LPD (w/ft²) multiplied by the function area, floor display area or the very valuable display case area. of the task (ft²) to obtain allotted watts, or the design watts of the luminaires assigned to the task function area, floor display area or the very valuable display case area.~~

~~For wall display the allowed watts are the lesser of: the LPD (w/lin ft) multiplied by the length of display wall or the design watts of the luminaires assigned to wall display.~~

~~The sum of the allowed watts for all spaces and tasks is the building allowed lighting power, in watts, as determined by the tailored method.~~

~~*Tradeoffs*~~

~~Only the general portion of the lighting power determined in §146 (b) (c) 3 A in the Standards above can be used for tradeoffs among the various occupancy or task types of the permitted space. The allowed wall display lighting power, the allowed floor display lighting power, the allowed ornamental/special effect lighting power, and the allowed lighting power for very valuable displays are "use-it-or-lose-it" power allowances that shall not be traded off.~~

~~*Allocation Restrictions of Task Lighting*~~

~~When using the tailored method, the determination of task lighting is based on need. Therefore, lighting plans must be submitted that show the actual task lighting application. Task lighting allotments from walls, floors or special applications cannot be traded off for use as general lighting.~~

C. Determine Additional Allowed Power

§146(b)3
Table ~~146-D~~ 146-G

Determine additional allowed power for display and decorative lighting according to Sections 146(c)3B. Displays that are installed against a wall shall not qualify for the floor display lighting power allowances. Floor displays shall not qualify for the wall display allowances.

Additional allowed power for display and decorative lighting is determined as follows:

1. Determine the additional wall display lighting power if allowed by column 3 of TABLE 146-G. If there is no power allowance listed in column 3 for a Primary Function, then no additional wall display lighting power is allowed for that Primary Function. If allowed, the additional wall display lighting power is the smaller of:

    a) Multiply the length of the display wall lengths times the allowed power density watts per linear foot (W/ft) in column 3 of TABLE 146-G, if applicable, or
    b) The actual power of wall lighting systems.

How to Determine Wall Length
The length of display walls shall include the length of the perimeter walls, including closable openings and permanent full height interior partitions.

Definition of Permanent Partitions
Permanent full height partitions are those which extend from the floor to within 2 feet of the ceiling or are taller than 10 feet, and are permanently anchored to the floor.

Commercial and industrial storage stacks are not permanent full height partitions.

Include Height Multiplier if Appropriate
For display lighting mounting height of 11' 6" above the finished floor or higher, this amount may be increased by multiplying the product by the appropriate factor from TABLE 146-H.

Qualifying Wall Lighting System
Qualifying wall lighting systems shall be mounted within ten feet of the wall and shall be of a lighting system type appropriate for wall lighting including a lighting track, wallwasher, valance, cove, or accent light including adjustable or fixed luminaires with PAR, R, MR, AR, or other projector lamp types.

2. Determine the additional floor display lighting power if allowed by column 4 of TABLE 146-G. If there is no power allowance listed in column 4 for a Primary Function, then no additional floor display lighting power is allowed for that Primary Function. If allowed, the additional floor display lighting power is the smaller of

a) Multiply the area of the primary function using the Tailored Method times the allowed floor display lighting power density listed in column 4 of TABLE 146-G, if applicable, or
b) The actual power of floor display lighting systems.

Include Height Multiplier if Appropriate
For display lighting mounting height of 11'6"' above finished floor or higher, this amount may be increased by multiplying the product by the appropriate factor from TABLE 146-H.

Qualifying Wall Lighting System
Qualifying floor display lighting systems shall be mounted no closer than two feet to a wall and shall be a lighting system type such as track lighting, adjustable or fixed luminaires with PAR, R, MR, AR, or other projector lamp types or employing optics providing directional display light from non-directional lamps.

Except for lighting that is external to display cases as defined below, lighting mounted inside of display cases shall also be considered floor display lighting.

DRAFT

3. Determine the additional ornamental and special effects lighting power if allowed by column 5 of TABLE 146-G. If there is no power allowance listed in column 5 for a Primary Function, then no additional ornamental or special effects lighting power is allowed for that Primary Function. If allowed, the additional ornamental and special effects lighting power is the smaller of:

    a) Multiply the area of the primary function using the Tailored Method times the allowed ornamental/special effects lighting power density specified in column 5 of TABLE 146-G, if applicable, or
    b) The actual power of allowed ornamental/special effects lighting luminaires.

Qualifying Ornamental/ Special Effects Lighting
Qualifying ornamental luminaires include chandeliers, sconces, lanterns, neon and cold cathode, light emitting diodes, theatrical projectors, moving lights, and light color panels when used in a decorative manner that does not serve as display lighting.

Must Not Be Only Light Source
Ornamental/special effects lighting shall not be the only light source in the space.

4. Determine additional lighting power for display cases presenting very valuable merchandise or other very valuable display items only for retail merchandise sales, museum, and religious worship.

If applicable, additional lighting power for display cases presenting very valuable merchandise or other very valuable display items is the smallest of the following three options:

a) Multiply the area of the primary function using the Tailored Method times 1.0 W/ft^2; or
b) Multiply the area of the display case and 16 W/ft^2, or
c) The actual power of lighting for very valuable displays

Qualifying Very Valuable Display Lighting
Qualifying lighting includes internal display case lighting or external lighting employing highly directional luminaires specifically designed to illuminate the case or inspection area without spill light.

To qualify for this allowance, cases shall contain jewelry, coins, fine china or crystal, precious stones, silver, small art objects and artifacts, and/or valuable collections the display of which involves customer inspection of very fine detail from outside of a locked case.

5. Only the allowed general lighting power determined in accordance with §146(c)3A above shall be used for tradeoffs among the various occupancy or task types of the permitted space.

Use-It-Or-Lose-It
The additional allowed wall display lighting power, the additional allowed floor display lighting power, the additional allowed ornamental/special effect lighting power, and the additional allowed lighting power for very valuable displays are "use it or lose it" power allowances that shall not be traded off.

DRAFT

Table 5-3 – Standards Table ~~146-D~~ 146-G Tailored Method Special Lighting Power Allowances

Primary Function	Illumination Category	Wall Display Power (W/ft)	Allowed Floor Display Power (W/ft²)	Allowed Ornamental/ Special Effect Lighting
Auditorium	D	2.25	0.3	0.5
Civic Meeting Place	D	3.15	0.2	0.5
Commercial and industrial storage				
Inactive	B			
Active: bulky items; large labels	C			
Active: small items; small labels	D			
Convention, conference, multipurpose and meeting centers	D	2.5	0.4	0.5
Correction Facility cells and day rooms	D	0	0	0
Dining	B	1.5	0.6	0.6
Dressing Room	D	0	0	0
Education Facilities				
Classrooms, lecture, training,, vocational room	D	5.5	0	0
Science Labs	E	5.5	0	0
Exercise center, gymnasium	IESNA HB	0	0	0
Exhibit, museum	C	20.0	1.4	0.7
Financial Transactions	D	3.15	0.2	0.6
Food Service Facilities				
Butcher Shop, Food Display, Gallery, Kitchen, Scullery	E	0	0	0
All other	C	0	0	0
Grocery store	D	9.9	1.1	0
Housing, Public and Commons Areas				
Multi-family	D	0	0	0.9
Dormitory, Senior Housing	D	0	0	0.9
Hotel function area	D	2.25	0.2	0.5
Laundry	D	0	0	0
Library (Reading Areas & Stacks) [1]	D	0	0	0.6
Lobbies:				
Hotel lobby	C	3.15	0.2	0.6
Main entry lobby	C	3.15	0.2	0
Locker [1]	C	0	0	0
Lounge/recreation	C	7	0	0.7
Malls and atria	D	3.5	0.5	0.6
Medical and clinical care	IESNA HB	0	0	0
Office				
Open Office; Intensive VDT use	D	0	0	0
Open Office; Intermittent VDT use	E	0	0	0
Private Office	E	0	0	0
Police or fire stations	IESNA HB	0	0	0
Religious worship	D	1.5	0.5	0.5
Retail merchandise sales, wholesale showrooms	D	17.0	1.2	0.7
Public rest areas along state and federal roadways	IESNA HB	0	0	0
Stairways and corridors; toilets and washrooms	B	0	0	0
Tenant lease space	C	0	0	0

DRAFT

Primary Function	Illumination Category	Wall Display Power (W/ft)	Allowed Floor Display Power (W/ft²)	Allowed Ornamental/ Special Effect Lighting
Theaters:				
Motion picture	C	3	0	0.6
Performance	D	6	0	0.6
Transportation Function	D	3.15	0.3	0.6
Waiting area	C	3.15	0.2	0.6
All other not included above	IESNA HB	0	0	0
[1] Library stacks and locker rooms may use a room cavity ration (RCR) or > 7 in Table 146-I				

Table 5-~~34~~ – Standards Table ~~146-E~~ 146-H Adjustments for Mounting Height above Floor

Height in feet above finished floor and bottom of luminaire(s)	Floor Display Multiply by	Wall Display Multiply by
~~12~~ 11-6 or less	1.0	1.0
~~13~~	~~1.05~~	
~~14~~	~~1.10~~	
~~15~~	~~1.15~~	
> 11-6 to ≤ 16	~~1.0~~ 1.2	1.15
> 16-0 to ≤ 20	~~1.21~~ 1.4	1.35
~~17~~	~~1.47~~	
~~18~~	~~1.65~~	
~~19~~	~~1.84~~	~~1.35~~
~~20 or more~~ >20-0	~~2.04~~ 2.0	1.75

Table 5-~~45~~ – Standards Table ~~146-F~~ 146-I Illuminance Categories A Through G Lighting Power Density Values (Watts/ft²)

IESNA Illuminance Category	RCR<3.5	3.5 < RCR < 7.0	RCR>7.0
A	0.2	0.3	0.4
B	0.4	0.5	0.7
C	0.6	0.8	1.1
D	0.9	1.2	1.4
E	1.3	1.8	2.5
F	2.7	3.5	4.7
G	8.1	10.5	13.7

DRAFT

Example 5-14

Question
A private office is 12 ft wide, by 12 ft long, by 9 ft high. The lighting system uses recessed ceiling fixtures. The task surface is at desk height (2.5 ft above the floor). What is the room cavity ratio?
Answer
The room cavity height is the distance from the ceiling (center line of luminaires) to the task surface (desk height). This is 9 ft – 2.5 ft = 6.5 ft.
RCR = [5 x H x (L + W)] / Area
RCR = [5 x 6.5 x (12 + 12)] / (12 x 12) = 5.42

Possible additional examples with respect to Tailored Method compliance *(drawings are preliminary final artwork to be developed)*

Example 3-17A

Question A: This large retail store with a sales area that has a 14 foot high ceiling and full height perimeter wall also has several other walls and a high fixture element in the space. Based on the definition of "full-height" partitions (per Section 146-3-B-i. of the code) which components qualify for the wall display allocation?

Answer to Question A:
Per Section 146-3-B-i. of the code only perimeter walls and "full height" interior partitions qualify for the wall display allocation. Therefore in this example the perimeter wall as well as the 11-foot high divider wall qualify. The low divider wall and high fixtures do not qualify.

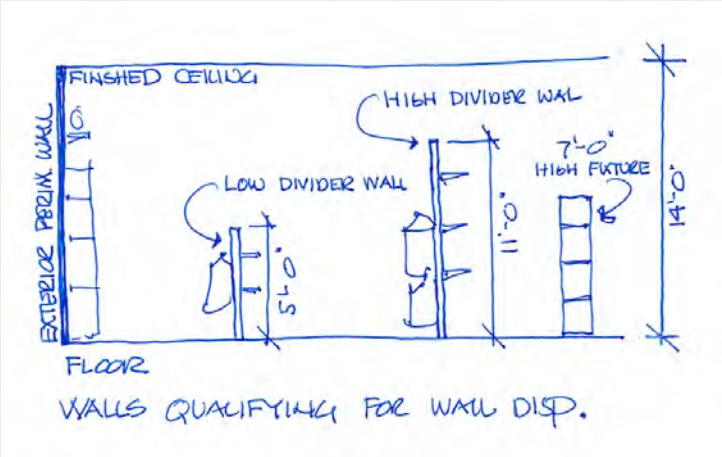

To calculate the allowed wall display watts the length of the exterior partition wall and the high divider wall are determined from Plans and/or elevations. The lengths of these walls is then multiplied by the allowed lineal watts per foot as shown in Table 146-G column 3. The total of these wattages is the maximum allowed wall display watts for this space.

NOTE: Wall display is a "use it or lose it" category allocation, therefore actual allowed watts is the lesser of the maximum allowed watts or total wattage of the wall display luminaires used in the design.

Example 3-17B

Question B: In this example Condition A has 2X4 troffers placed three feet from a perimeter sales wall as well as fluorescent wall-washers five feet from the sales wall. Condition B has fluorescent wall-washers three feet from the wall and PAR adjustable accent lights five feet from the wall. Which luminaires qualify for the wall display lighting allocation.

Answer to Question A:
Per Section 146-3-B-i. of the code Qualifying lighting must be mounted within Ten feet of the wall and appropriate wall lighting luminaires. (luminaires with asymmetric distribution toward the wall or adjustable –directed toward the wall)

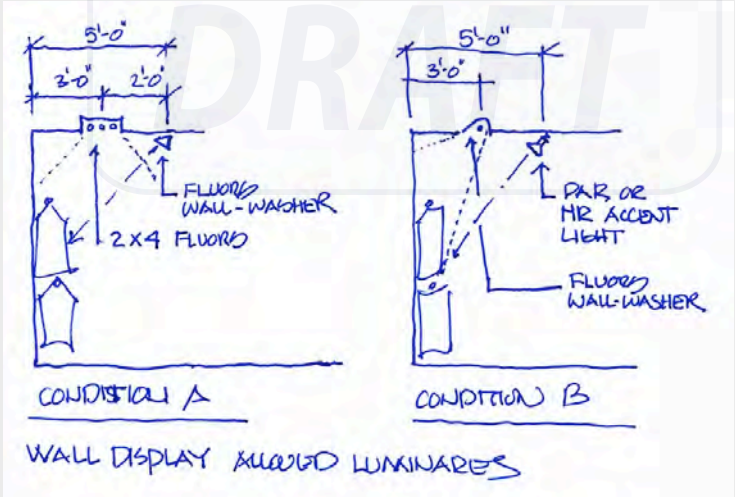

CONDITION A
While both luminaires are within ten feet of the wall only the wall-washer qualifies for the wall display allocation. The 2X4 is a general lighting luminaire with symmetric versus asymmetric distribution and doe not qualify for the allocation.

CONDITION B
Both luminaires are within ten feet of the wall and both qualify for the wall display allocation. The fluorescent wall-washer has an asymmetric distribution and the PAR accent light at five feet from the wall is directional and is lamped with a projector lamp.

Example 3-17C

Question C: A museum space has directional accent lighting luminaires on track mounted to the ceiling. The first track is three feet from the perimeter wall of the exhibit space and the second track is nine feet from the wall. There is a third track (not shown) that is fifteen feet into the space. To what display category should these luminaires be assigned under Section 146-3-B of the code

Answer to Question C:
Per Section 146-3-B-I & ii. of the code Wall display luminaires must be within 10-feet of the wall and directional and floor displays must be at least two feet away from the wall and also directional.

Using the above criteria the allocations for the two conditions shown are as follows:

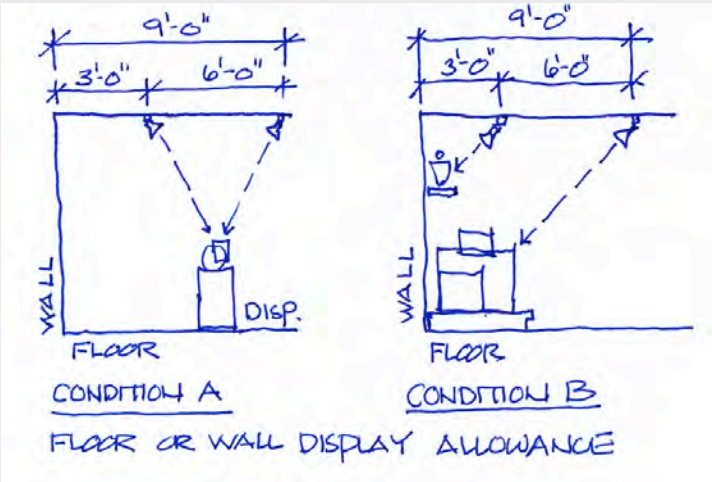

CONDITION A
Both sets of luminaires shown are at least two feet away from the wall and are directed onto a floor exhibit (display) therefore they both qualify for the floor display allocation. The third track with directional luminaires also qualifies as floor display.

CONDITION B
Both sets of luminaires shown are also closer than ten feet to the wall and are directed onto a wall exhibit (display) therefore they both, when directed toward the wall qualify for the wall display allocation. The third track with directional luminaire (15 feet from the wall) doe not qualify for wall display, only floor display

NOTE: Luminaires within a two foot to ten foot zone may be assigned to either wall or floor display depending on the focus direction of the luminaires. However only one classification wall or floor can be used for luminaire compliance submittal not both.

Example 3-17D

Question D: A high ceiling space with allowed display lighting has wall-washers mounted on the ceiling near the wall and accent lights mounted on suspended track in the center of the space. Because of the eighteen foot high ceiling does the display lighting qualify for a mounting height factor adjustment?

Answer to Question D:
Per Section 146-3-B-I & ii. of the code some but not all of the display lighting qualifies for the mounting height adjustment.

The wall directional lighting at the ceiling Is above 11 foot 6 inches which qualifies It for an adjustment of a 1.35 factor per Table 146-H of the code. However the track is suspended at eleven feet which excludes it from an adjustment factor. It must use the default factor of 1 with the allowed LPD as shown in column 4 in Table 146-G

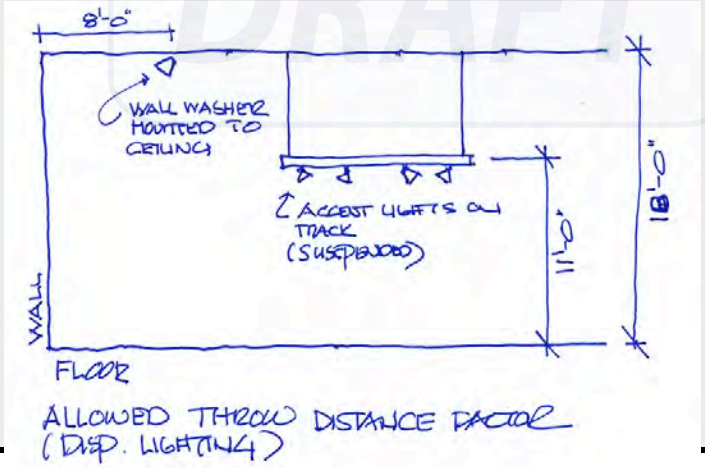

Example 5-15

Question
~~The~~ A private office ~~in the above example~~ is to comply under illuminance category E (found in the IESNA Lighting Handbook). What is the allowed lighting power?
Answer
The RCR is 5.4 and the area of the office is 144 ft². The allowed LPD for ~~task~~ IESNA illuminance category E from ~~the IESNA Lighting Handbook illuminance~~ Standards Table 146-I is 1.8 w/ft² (RCR of 5.4) Therefore, the allowed power for this office is 1.8 w/ft² X 144 ft² = 259 watts.

Example 5-16

Question
A 5,500-ft² retail store with an RCR of 4.0 has:
5,000 ft² of gross sales floor area.
200 ft² of restrooms with a RCR of 6.0.
300 ft² of corridors with a RCR of 6.5.
100 ft² of very valuable merchandize case top with 1,200 W of actual lighting.
Ornamental/special effects lighting is being used as part of the retail scheme
300 linear ft of parameter wall including closeable openings.
What is the allowed general lighting, wall display, floor display, ornamental/special effect, and very valuable display wattage in this store using the tailored method?
Answer
From Standards Table ~~146-D~~ 146-G, column 2, the general power illumination category for retail is category D. From Standards Table ~~146-F~~ 146-I, the LPD for illumination category of D and RCR of 4.0 is 1.2 w/ft². Therefore, the allowed general lighting power is 1.2 w/ft² X 5,000 ft² = **6,000 W**.
From IESNA Handbook, restrooms are at illuminance category C. From Table ~~146-F~~ 146-I in the Standards, at illuminance category C and RCR of 6.0, the LPD is 0.8 w/ft², therefore, the allowed power for the restrooms is 200 ft² x 0.8 W/ft² = **160 W.**
From IESNA Handbook, corridors are at illuminance category C. From Table ~~146-F~~ 146-I in the Standards, at illuminance category C and RCR of 6.5, the LPD is 0.8 w/ft², therefore, the allowed power is 300 ft² x 0.8 W/ft² = **240 W.**
The wall display lighting is computed from the entire wall parameter including all closeable openings times the wall display power allowance. Therefore, the allowed wattage is 300 ft x ~~21~~ 17w/ft = ~~**6,300 W**~~ **5,100W**. The allowance is taken from column three of Standards Table ~~146-D~~ 146-G.
The floor display allowance is computed from the area of the entire space with floor displays times the floor display lighting power density. Therefore, the allowed wattage is 5,000 ft² x ~~1.5~~ 1.2 w/ft² = ~~**7,500 W**~~ **6,000W**. The allowance is taken from column four of ~~146-D~~ 146-G in the Standards.
The ornamental/special effect allowance is computed from the area of the entire space with floor displays times the ornamental/special effect lighting power density. Therefore, the allowed wattage is 5,000 ft² x 0.7 w/ft² = **3,500 W**. The allowance is taken from column five of ~~146-D~~ 146-G in the Standards.
The allowed wattage for very valuable display case top is smaller of the ~~1.3~~ 1.0 w/ft² ~~(from column five of Standards Table 146-D)~~ and the gross sales area (5,000 ft²), or ~~20~~ 16 w/ft² times the actual area of the case tops (100 ft²). The maximum allowed power is the smaller of ~~1.3~~ 1.0 w/ft² X 5,000 ft² = ~~6,500~~ 5,000 watts, or ~~20~~ 16 w/ft² X 100 ft² = ~~2,000~~ 1,600 watts. Therefore, the maximum allowed power is ~~**2,000**~~ **1,600 W**.
Therefore, the total allowed lighting wattage is 6,000 + 160 + 240 + 5,100 + ~~7.500~~ 6,000 + 3,500 + ~~2,000~~ 1,600 = ~~**19,400 W**~~. **22,600 W**. ~~Please~~ note that in tailored method, the allowed wattage for

each lighting task activity is of the use-it-or-lose-it kind, which prohibits tradeoffs between different tasks.

Example 5-17

Question
If in the question above, the actual design wattages for floor display and very valuable display are 5,000 and 1,000 W respectively, what are the maximum allowed floor display and very valuable display power allowances?
Answer
Since the floor display and very valuable display allowances are use-it-or-lose-it allowances, the maximum power allowed is the smaller of allowed watts for floor display ~~(7,500 W)~~ (6,000W) and very valuable display ~~(2,000 W)~~ (1,600W) or the actual design watts for floor display (5,000 W) and very valuable display (1,000 W). Therefore, the maximum allowed watts for floor display and very valuable display are the 5,000 and 1,000 W actual design watts, not 6000W and 1,600W maximum allowed watts.

Example 5-18

Question
How is the RCR determined for the library reading room/stack area shown in below?

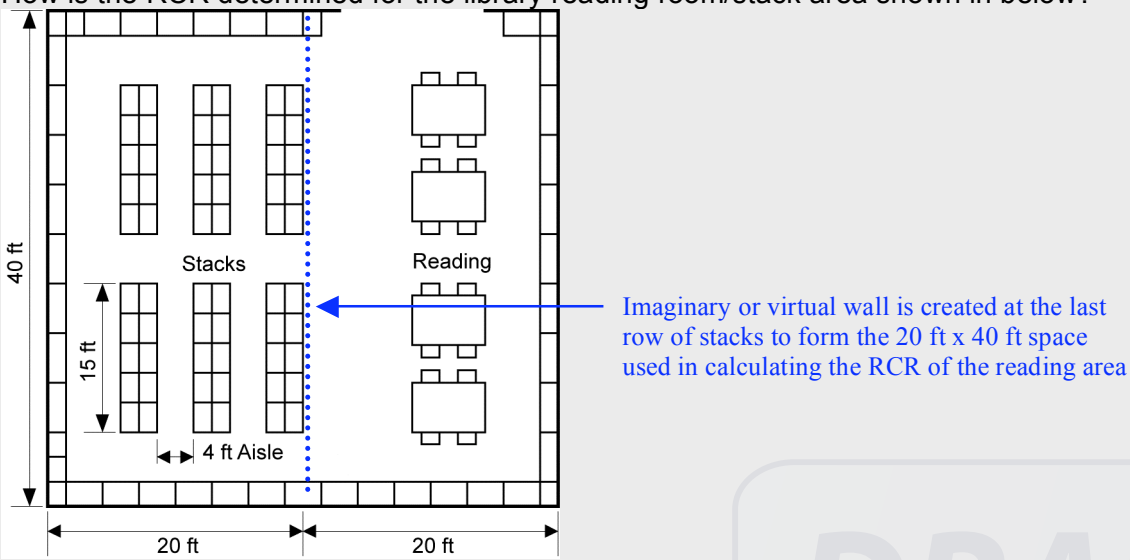

Answer
A RCR value of 7 may be assumed for the stack area. The reading area RCR is calculated based on the reading area room dimensions (20 ft x 40 ft) and on the room cavity height.

DRAFT

5.4 Performance Approach

The performance approach provides an alternative method to the prescriptive approach for establishing the allowed lighting power for the building.

Under the performance approach, the energy use of the building is modeled using a computer program approved by the Energy Commission. In this energy analysis, the standard lighting power density for the building is determined by the computer program based on occupancy type, in accordance with either the complete building, area category, or tailored rules described above. This standard lighting power density is used to determine the energy budget for the building.
When a lighting permit is sought under the performance approach, the applicant uses a proposed lighting power density to determine whether or not the building meets the energy budget. If it does, this proposed lighting power density is automatically translated into the allowed lighting power for the building (by multiplying by the area of the building).

If the building envelope or mechanical systems are included in the performance analysis (because they are part of the current permit application), then the performance approach allows energy trade-offs between systems that can let the allowed lighting power go higher than any other method. Alternatively, it allows lighting power to be traded away to other systems, which would result in a lower allowed lighting power. This flexibility in establishing allowed lighting power is one of the more attractive benefits of the performance approach.

When tailored lighting is used to justify increases in the lighting load, a lower lighting load cannot be modeled for credit. The standard design building uses the lesser of allowed w/ft^2, or actual lighting power, to be installed in the building. The proposed design building uses the actual lighting power to be installed as detailed on the lighting plans. This value must be equal to, or greater than, the allowed w/ft^2.

DRAFT

5.5 Calculating the Lighting Power

Once the allowed lighting power is determined by one of the prescriptive methods or the performance approach, it is compared to the actual lighting power (adjusted for controls). The designed or actual lighting power is simply the sum of the wattages of all planned permanent and portable lighting fixtures in the building, based on the same floor area as was used to calculate the allowed lighting power. The actual lighting power may be adjusted through lighting control credits, called Power Adjustment Factors (Table 146-C), if optional automatic lighting controls are installed.
The actual lighting power does not necessarily include every light in the building. There are a number of lighting applications that are exempted from the Standards limits on lighting power.

5.5.1 Exempt Lighting

§146(a)~~5~~3

The following lighting applications are exempt from the actual lighting power used to compare with the allowed lighting power for compliance with §146(c). However, some of the applications listed below are regulated by other sections of the Standards. For example, lighting in hotel/motel guest rooms is exempt from §146(c), but it is regulated in §150(k) in accordance with §130(b).

A. In theme parks: lighting for themes and special effects. Regular spaces such as administrative offices and retail areas are *not* exempt.

B. Studio I~~L~~ighting for film~~, video~~ or photography~~ studios~~ provided that these lighting systems are separately switched from a general lighting system.

C. Lighting for dance floors, ~~and~~ lighting for theatrical and other live performances, and theatrical lighting used for religious worship, provided that these lighting systems are additions to a general lighting system and are controlled by a multiscene or theatrical cross-fade control station accessible only to authorized operators.

D. In civic facilities, transportation facilities, convention centers, and hotel function areas: lighting for temporary exhibits if the lighting is an addition to a general lighting system and is separately controlled from a panel accessible only to authorized operators.

E. Lighting installed by the manufacturer in refrigerated cases, walk-in freezers, vending machines, food preparation equipment, and scientific and industrial equipment.

F. In medical and clinical buildings: examination and surgical lights, low-level night lights, and lighting integral to medical equipment, provided that these lighting systems are additions to and separately switched from a general lighting system.

G. Lighting for plant growth or maintenance~~ equipped with an automatic 24-hour time switch with program backup capabilities to prevent the loss of the switch's program and time setting for at least 10 hours if power is interrupted.~~, if it is controlled by a multi-level astronomical time-switch control that complies with §119(h);

H. Lighting equipment that is for sale.

I. Lighting demonstration equipment in lighting education facilities.

J. Lighting that is required for exit signs subject to the California Building Code. ~~with a maximum lamp input power rating of five watts per illuminated face or less. (~~Exit signs shall meet the requirements of the Appliance Efficiency Regulations.~~)~~

K. Exitway or egress illumination that is normally off and that is subject to the California Building Code.

   i. Lighting in guestrooms in hotel/motel buildings: lighting in hotel/motel guestrooms shall comply with the applicable provisions in §150(k) in accordance with §130(b)

L. In high-rise residential buildings dwelling units: lighting in high-rise residential dwelling units shall comply with the applicable provisions in §150(k) in accordance with §130(b)~~Living quarters in high-rise residential buildings, except that such lighting shall comply with the requirements for low-rise residential buildings~~ (see Chapter 6 of the Residential Compliance Manual).

M. Temporary lighting systems, as defined in §101.

N. Lighting in occupancy group U buildings less than 1,000 ft^2.

O. Lighting in unconditioned agricultural buildings less than 2,500 ft^2.

P. Lighting systems in qualified historic buildings, as defined in the State Historic Building Code (Title 24, Part 8), are exempt from the lighting power allowances if they consist solely of historic lighting components or replicas of historic lighting components. All other lighting systems in qualified historic buildings, or non-historic parts of those lighting systems, shall comply with the lighting power allowances.

Q. Lighting in ~~P~~parking garages for seven or less vehicles. Lighting in parking garages for seven or less vehicles shall comply with the applicable provisions of Section 150(k).

R. Lighting for signs. Signs shall comply with Section 148. ~~Internally illuminated, externally illuminated, and unfiltered signs. (These signs are exempt from the actual lighting power used to compare with the allowed lighting power. However, sign energy requirements in §148 apply to all internally illuminated and externally illuminated signs, whether they are used indoors or outdoors.)~~

S. Lighting in a videoconferencing studio: Up to 2.5 watts per square foot of lighting in a videoconferencing studio provided the videoconferencing lighting is in addition to and separately switched from a general lighting system, all of the lighting is controlled by a multiscene programmable control system, and the video conferencing studio has permanently installed videoconferencing cameras, audio equipment, and playback equipment.

T. Lighting for automatic teller machines that are located inside parking garages.

5.5.2 Actual Lighting Power Calculation

§146(a)

For calculating the actual lighting power, wattages of all planned permanent, and portable (including planned portable), including hard wired and plug-in lighting systems shown on the plans at the time of permitting, must be considered (except those exempt under §146(a)3). This includes track lighting systems, chandeliers, portable free standing lights, lights attached to workstation panels, movable displays and cabinets, and internally illuminated case work for task or display purposes. ~~Sufficient supporting evidence (from manufacturer's catalogs or values from independent testing lab reports) must be submitted to and accepted by the building authority.~~ The individual signing the lighting plans must clearly indicate on the plans the actual power for the portable lighting systems in the area (§146(a)2).

The calculation of actual lighting power is accomplished with the following steps:

1. Determine the watts for each type of fixture. This includes both the lamp and the ballast wattage. These are interdependent, so the wattage of a particular lamp/ballast combination is best determined from reputable manufacturer's test data. Default values from ~~ACM Manual~~ Reference Nonresidential Appendix ~~NB~~NA8 may be used for standard lamp and ballast combinations.
2. Determine the number of each fixture type in the design.
3. Multiply the fixture wattages by the numbers of fixtures and sum to obtain the building total actual lighting power in watts (this includes wattages of portable lighting systems ~~for office spaces~~).
4. Adjust for ~~lighting control credits~~Power Adjustment Factors (PAF), if applicable.

A. Portable Lighting Systems

§146(a)~~1~~

For all spaces, the actual wattage of all planned permanent and portable lighting ~~shown on the plans at the time of permitting~~ must be included in determining the actual lighting power density. The individual signing the lighting plans must clearly indicate the actual power for the planned permanent and portable lighting systems in the area.

However, for offices of any size, the first 0.2 watts per square feet of portable lighting is not used for determining the actual installed lighting power density. For example, if 0.3 watts per square feet of portable lighting is planned in an office, then only 0.1 watts per square feet (0.3 minus 0.2 = 0.1) will be added to the actual installed lighting power density.

~~Portable lighting fixtures are often added to office spaces after the building is occupied. If the actual wattage of portable lighting is not known at the time of permitting, then the Standards require that an additional lighting power of 0.2 w/ft^2 be included in determining the actual lighting power density. Enclosed~~

~~office spaces with areas equal to or less than 250 ft^2 enclosed by floor-to-ceiling permanent partitions are exempt from this requirement. Note that the portable lighting requirement applies to all office spaces regardless of the primary function area of the building. This requirement will apply to most buildings with typical open office type of layouts. However, once portable lighting systems have been installed in the space, the building official may require that the actual lighting power of the space be recalculated and resubmitted taking into account the actual wattage of the installed portable systems.~~
~~If portable lighting is shown on the plans, the documentation must include information on luminaire layout (accompanied by furniture layout including modular furniture walls, shelves and cabinets), location, brand, model, and performance characteristics of all luminaires in the space. The designer is responsible for providing all of the information that the building inspector may need to clearly understand that less than 0.2 w/ft^2 of portable lighting will be needed.~~

Example 5-1~~22~~
Question
A retail building has two enclosed office spaces (120 ft^2 each) with floor-to-ceiling permanent partitions, for store managers. Should calculations for installed lighting power ~~include an additional 0.2 w/ft^2 to~~ account for portable lighting for these spaces?
Answer
~~No~~Yes. ~~The enclosed spaces are exempt from the additional 0.2 w/ft^2 requirement because their area does not exceed 250 ft^2.~~ All office spaces are required to account for portable lighting, regardless of the size of the office.
Example 5-2~~23~~
Question
An 8,000-ft^2 office building is to be built. At the time of permit application, the actual wattage of planned portable lighting for the office area is not known and no portable lighting is shown on the plans. Further, the percentage of office areas versus support areas is not known at the time of permitting. Using the complete building method, how does this affect the installed lighting power calculation for the building?
Answer
The Standards require that ~~a~~ portable lighting power in excess of 0.2 w/ft^2 be included in the calculation of installed lighting power for office buildings ~~with areas greater than 250 ft^2. However, since the percentage of office areas versus support areas is not known in the building, the 0.2 w/ft^2 should be added to the installed lighting power of the permanent fixtures installed in the entire 8,000 ft^2 of office space.~~ If it can be assumed that no more than 0.2 w/ft^2 of portable lighting will be installed in the office spaces, the portable lighting is not required to be included in determining the actual lighting power density. However, if more than 0.2 w/ft^2 of portable lighting will be installed in the office spaces, then portable lighting in excess of 0.2 w/ft^2 is required to be included in determining the actual lighting power density. The building inspector may require Title 24 documentation be resubmitted after the portable lighting has been installed.
Example 5-3~~24~~
Question
An 8,000-ft^2 office building is to be built. The building contains 2,000 ft^2 of corridors, restrooms, and storage rooms. ~~At the time of permit application,~~ T~~t~~he actual wattage of planned portable lighting for the office area is 0.3 w/ft^2 ~~not known and no portable lighting is shown on the plans~~. Using the complete building method, how does this affect the installed lighting power calculation for the building?
Answer

The Standards require that ~~a~~ portable lighting power in excess of 0.2 w/ft^2 be included in the calculation of installed lighting power for office buildings ~~with areas greater than 250 ft^2~~. Therefore, ~~0.2~~ 0.1 w/ft^2 ~~should~~ must be added to the installed lighting power of the permanent fixtures installed in the 6,000 ft^2 of office space. ~~All other spaces (2,000 ft^2 of corridors, restrooms, and storage rooms) are exempt from this requirement~~.

Example **Error! No text of specified style in document.**4-4~~25~~

Question

~~A small 200 ft^2 office building is to be built. At the time of permit application, the actual wattage of the planned portable lighting is not known and no portable lighting is shown on the plans. How does this alter the installed lighting power calculation?~~

~~Answer~~

~~The installed lighting power calculation remains unaltered. No portable lighting power is required to be included in the calculation of installed lighting power for office buildings with areas equal to or less than 250 ft^2.~~

A general commercial area will have portable lighting. Because this area is not an office, is the portable lighting excluded in determining the actual lighting power density?

Answer

No, portable lighting is not excluded in determining the actual lighting power density in general commercial areas or any other function areas. The Standards require that all planned portable and permanent lighting be included in determining the actual lighting power density, regardless of the building type of use or function of the area.

Example **Error! No text of specified style in document.**4-5~~26~~

Question

~~A 5,000 ft^2 retail building, which includes a 300 ft^2 administrative office space and other spaces (as listed below), is to be built. At the time of permit application, the actual wattage of planned portable lighting is not known and no portable lighting is shown on the plans. How will the installed lighting power for the building be calculated?~~

~~Function~~	~~Area~~
~~Office~~	~~300~~
~~Common Restrooms~~	~~200~~
~~Common Corridors~~	~~500~~
~~Retail Function~~	~~3,000~~
~~Total Building Area~~	~~4,000~~

~~Answer~~

~~Although office is *not* the primary function of the building, an additional 0.2 w/ft^2 must be added to the installed lighting power because the area of the space is greater than 250 ft^2. The remaining area is exempt from this requirement.~~

B. Multiple Interlocked Lighting Systems Serving a Space

§146(a)1

When multiple interlocked lighting systems serve an auditorium, convention center, conference room, multipurpose room, or theater, the watts of all systems except the system with the highest wattage may be excluded if the lighting systems are interlocked with a non-programmable double throw switch to prevent simultaneous operation.

Question

An auditorium will have two lighting systems. Only one lighting system will ever be needed at a time. When added together, these two lighting systems exceed the power allowances. However, individually they comply with the Standards. Can a preset dimming system that prevents

simultaneous operation of more than one lighting system be used so that one of the lighting systems may be excluded from the actual lighting power density?
Answer
No, a preset dimming system does not qualify for the multiple interlocked lighting system provision. The only approved type of control that will allow the smaller wattage of the two lighting systems to be excluded from the actual lighting power density is a non-programmable double throw switch.
Question
A restaurant will have two lighting systems. Only one lighting system will ever be used at a time. When added together, these two lighting systems exceed the power allowances. However, individually they comply with the Standards. Can a non-programmable double throw switch be used so that one of the lighting systems may be excluded from the actual lighting power density?
Answer
No, a restaurant does not qualify for the multiple interlocked lighting system provision. The only function areas that qualify are an auditorium, convention center, conference room, multipurpose room, or theater.

5.5.3 Determining Luminaire Wattage

§130(d)
Nonresidential Appendix NA-8 2008

~~For most fixture types, determining the luminaire wattage is straightforward. ACM Manual Appendix NB shows typical luminaire power for a wide range of lamp and ballast types and these values may be used as a default. There are, however, a few types that require special consideration.~~

The Standards determine the luminaire wattage to be counted towards calculating installed indoor lighting power based on lamps, ballasts, and luminaire type. Depending on the lighting technology used in the luminaire, there are various methods for determining luminaire wattage in §130(d) of the 2008 Standards. The various methods are described below.

Actual wattage installed may require obtaining information from manufacturer cut sheets, catalog data, or from the permanent, pre-printed factory-installed labels, depending on the type of luminaire. Reference Nonresidential Appendix NA8 may be used as a default to determine luminaire wattage for some fluorescent, high intensity discharge, and 12-volt tungsten halogen lighting systems. However, luminaire wattage for lighting systems which are not specifically listed in NA8-2008 cannot be determined using default wattages listed in NA8.

***~~Medium Screw Base~~ A. Line-Voltage* Sockets**

§130(d~~e~~)1

~~The wattage of incandescent or tungsten-halogen luminaires with medium screw base sockets and not containing permanently installed ballasts shall be the maximum relamping rated wattage of the luminaire, as listed on a permanent factory-installed label, as specified by UL 1598. Medium screw base sockets are typically found in fixtures that require a screw-in type lamp. They are the most common lamp bases for incandescent lamps (the ordinary type of light bulb that generates light from a glowing filament). These bases are used for a wide range of lamp wattages. These fixtures present a special situation when calculating~~

~~actual lighting power, because the wattage of the lamps can be easily changed at any time. For luminaires with modular components that allow conversion between screw-based and pin-based sockets without changing the luminaire housing or wiring, it shall be assumed that an incandescent lamp of the maximum relamping wattage available for that system will be used. The plans should specify the maximum allowed lighting power for each luminaire so that installers understand not to install luminaires with higher ratings.~~
A medium screw-base socket, which is one type of line-voltage socket, can accommodate a variety of different lamp technologies, including general service incandescent, halogen, reflector, and compact fluorescent lamps, ranging in wattages from 2-1/2 to 250 watts per socket. Line-voltage sockets include a variety of screw, pin, and bayonet types of bases, for which there is no transformer, ballast, or power supply between the mains power and the lamp.

The wattage of a luminaire with line-voltage sockets is determined by the rating of the luminaire, as described below, and not by the wattage of the initial lamp installed in the luminaire.

There are different requirements for determining the wattage of recessed luminaires than there are for determining the wattage of luminaires which are not recessed, as follows:

1. **Line-Voltage Luminaires Which Are Not Recessed –**shall be the maximum relamping rated wattage of the luminaire, as listed on a permanent, pre-printed, factory-installed label, as specified by UL 1598. Permanently installed luminaries which are not recessed include the following types:
    a. Surface mounted; to a ceiling, wall, or under-cabinet
    b. Pendant mounted; typically from a ceiling
    c. Mounted on a pole, a method most often used for outdoor lighting
    d. Under-cabinet mounted

The pre-printed, factory-installed wattage label shall not consist of peel-off or peel-down layers or other methods which allow the rated wattage to be changed after the luminaire has been shipped from the manufacturer.

2. **Line-Voltage Luminaires Which Are Recessed** - shall be the larger of 'a.' or 'b.' below:
    a. The maximum relamping rated wattage of the recessed luminaire, as listed on a permanent, pre-printed, factory-installed label, as specified by UL 1598, or the following, or
    b. If the relamping rated wattage on the label is smaller than the wattages listed below, then the wattages listed below must be used. The wattages listed below are determined by the aperture diameter and mounting height of the luminaire, as follows.
        i. 50 watts per socket for luminaires with housings or trims with an aperture diameter less than 5 inches regardless of mounting height; or
        ii. 50 watts per socket for luminaires with housings or trims with an aperture diameter of greater than or equal to 5 inches and a mounting height of 11 feet or less, or

iii. 60 watts per socket for luminaires with housings or trims with an aperture diameter of greater than or equal to 5 inches and a mounting height of greater than 11 feet but less than 15 feet; or

iv. 75 watts per socket for luminaires with housings or trims with an aperture diameter of greater than or equal to 5 inches and a mounting height of 15 feet or more.

For clarity, Table 5-??? shows the above information in a table.

Table 5-??? –Recessed Luminaire with Line voltage Lamp Holders

Input wattage per socket shall be larger of what is listed on the UL label, or the wattage listed below, depending on the aperture and mounting height of the luminaire.

		Recessed Luminaire Aperture							
		≤3”	4”	5”	5”	7”	8”	9”	≥10”
Mounting Height	≤ 8’	50W	50W	50W	50W	50W	50W	50W	50W
	9’	50W	50W	50W	50W	50W	50W	50W	50W
	10’	50W	50W	50W	50W	50W	50W	50W	50W
	11’	50W	50W	50W	50W	50W	50W	50W	50W
	>11’	50W	50W	60W	60W	60W	60W	60W	60W
	13’	50W	50W	60W	60W	60W	60W	60W	60W
	<15’	50W	50W	60W	60W	60W	60W	60W	60W
	15’	50W	50W	75W	75W	75W	75W	75W	75W
	≥16’	50W	50W	75W	75W	75W	75W	75W	75W

B. Luminaires with Modular Components

§130(d)1C

For luminaires designed to accommodate a variety of trims or modular components that allow the conversion between screw-based and pin-based sockets without changing the luminaire housing or wiring, the highest wattage designated by the correlated marking on a permanent, pre-printed, factory-installed label on the luminaire housing shall be used.

C. Luminaires with Permanently or Remotely Installed Ballasts

§130(~~c~~d)2

The wattage of luminaires with permanently installed or remotely installed ballasts shall be the operating input wattage of the rated lamp/ballast combination based on values published in manufacturer’s catalogs based on values from independent testing lab reports as specified by UL 1598. ~~For compact fluorescent luminaires with permanently installed ballasts that are capable of operating a range of lamp wattages, the highest operating input wattage of the rated lamp/ballast combination must be used for determining the luminaire wattage.~~

The wattage of a compact fluorescent or high intensity discharge luminaire that can accommodate a range of wattages without changing the luminaire housing, ballast, or wiring shall be the larger of:

a. The installed wattage, or

b. The average wattage of the lamp/ballast combinations for which the luminaire is rated.

An example of a compact fluorescent luminaire which is rated for use with 26, 32, or 42 watt compact fluorescent lamps without changing the luminaire housing, ballast or wiring is shown below:

Initial Lamp Wattage Installed	Installed Wattage
26 watts	33.33 watts
32 watts	33.33 watts
42 watts	42 watts

D. Line Voltage Track and Busway Lighting

§130(~~c~~d)3~~, §130(c)4~~

There are two types voltages used with track and busway lighting systems: ~~tracks on~~ line-voltage tracks and busway, and low-voltage tracks and busway. Line-voltage ~~tracks~~ includes tracks and busway that operate on 90 through 480 volts. Low-voltage ~~tracks~~ includes tracks and busway that operate on less than 90 volts.

The wattage for low-voltage track lighting is determined according to §130(d)4, and is described later in this chapter. The wattage for line-voltage track and busway is determined as follows:

~~Line-Voltage Tracks~~

~~The wattage for track lights on line-voltage tracks - including plug in busways used for lighting - shall be determined by one of the following two methods:~~

~~1.Volt-ampere (VA) rating of the branch circuit(s) feeding the tracks, or the higher of:~~

- ~~Wattage (or VA) rating of an integral current limiter controlling the track system, or~~
- ~~15 watts per linear foot of the track~~

~~For branch circuits with multiple tracks, with every track equipped with an integral current limiter, the rating shall be the higher of 15 watts per linear foot or the sum of the wattage (or VA) rating of all current limiters controlling the tracks. For branch circuits that have a mix of tracks with and without current limiters, the wattage of the tracks without integral current limiters shall be determined by method 2 below.~~

~~2. The higher of 45 W per linear foot of the track or total wattage of all of the luminaires included in the system. Determine the wattage of each luminaire (track head) according to § 130 (c) of the Standards. Luminaire wattage for incandescent track heads shall meet the requirements of S § 130 (c) 1, based on the maximum relamping rated wattage as listed on a permanent factory-installed label. Luminaire wattage for~~

~~fluorescent and high intensity discharge (HID) track heads shall meet the requirements of § 130 (c) 2, based on the operating input wattage of the rated lamp/ballast combination. Luminaire wattage for low-voltage track heads (when mounted on line-voltage track) shall meet the requirements of § 130 (c) 5, based on the maximum rated wattage of the transformer on each track head. This method applies to single and multi circuit track.~~

~~When using an integral current limiter, such device shall be permanently attached to or an integral part of the track. The VA rating of the current limiter shall be clearly marked on the device and readily available for the building officials' field inspection without opening coverplates, fixtures or panels. Access to wiring connections shall employ tamper resistant hardware and a conspicuous label shall be permanently affixed to the wiring compartment warning against removing, tampering with, rewiring, or bypassing the device.~~

~~If a current limiter is used to achieve compliance for tracks, the manufacturer of the current limiting device must certify to the commission that the device complies with all of the applicable requirements of Standards §130 (c) 3 and Section 5.4.3 of this manual, Determining Luminaire Wattage.~~

~~Low-Voltage Tracks~~

~~Low-voltage tracks, cable conductors, rail conductors, and other low voltage flexible lighting systems which are serviced through permanently installed transformers must use the specified rated wattage of the transformer feeding the system, as shown on a permanent factory-installed label per UL-1574 or UL-1598, as the actual lighting power of the track.~~

~~In some situations, extra length of track is desired to provide greater flexibility in locating lighting fixtures. In these cases, the designer can limit the actual lighting power by providing interlock switching that limits the circuits (and therefore the electric capacity) of track lighting that can be operated simultaneously.~~

1. **Track and Busway Rated More Than 20 Amperes**. The wattage of line voltage busway and track rated for more than 20 amperes shall be the total volt-ampere rating of the branch circuit feeding the busway or track.
2. **Track and Busway Rated 20 Amperes or Less.** For convenience and versatility, there are four different options for determining the wattage of line voltage busway and track rated for 20 amperes or less, as follows:
   1. Use the VA rating of the branch circuit feeding the track or busway
   2. Use the higher of 'i' or 'ii' below:

i. The higher of the rated wattage of all of the luminaires included in the system, where wattage is determined according to §130(d)(1, 2, 4, 5, or 6) as applicable, or
ii. 45 watts per linear foot of track or busway, or

3. When using a track lighting integral current limiter which has been certified to the Energy Commission according to §119(l), use the higher of 'i' or 'ii' below:
   i. The VA rating of the integral current limiter controlling the track or busway, or
   ii. 12.5 watts per linear foot of track or busway

   Note: There are changes to the 2008 requirements for track lighting integral current limiters. Track lighting integral current limiters that were certified only under the provisions of the 2005 Standards must be re-certified under the requirements of the 2008 Standards. Track lighting integral current limiters which have not been certified to the Energy Commission under the requirements in the 2008 Standards shall not be installed.
4. When using a dedicated track lighting supplementary overcurrent protection panel, use the sum of the ampere (A) rating of all of the overcurrent protection devices times the branch circuit voltages.

   The supplementary overcurrent protection panel shall meet all of the following requirements:
   i. Be listed as defined in §101, and
   ii. Be used only with line voltage track lighting; and
   iii. Be permanently installed in an electrical equipment room, or permanently installed adjacent to the lighting panel board providing supplementary overcurrent protection for the track lighting circuits served by the supplementary over current protection panel; and
   iv. Be prominently labeled

   NOTICE: This Panel for Track Lighting Energy Code Compliance Only. The overcurrent protection devices in this panel shall only be replaced with the same or lower amperage. No other overcurrent protective device shall be added to this panel. Adding to, or replacement of existing overcurrent protective device(s) with higher continuous ampere rating, will void the panel listing and require re-submittal and re-certification of California Title 24, Part 6 compliance documentation.

E. Low-Voltage Lighting

§130(d)4

This method applies to any low-voltage lighting system having a transformer, including low-voltage track lighting, or individual low-voltage luminaires.

The wattage of luminaires or lighting systems with permanently installed or remotely installed transformers shall be determined as follows:

1. The rated wattage of the lamp/transformer combination, listed on a permanent, pre-printed, factory-installed label, as specified by UL, and

2. For luminaires with transformers rated greater than 50 watts, the factory-installed wattage label shall not consist of peel-off or peel-down layers or other methods which allow the rated wattage to be changed after the luminaire or lighting system has been shipped from the manufacturer.

F. LED Lighting Source Systems

§130(d5)

LED lighting source systems shall be the maximum rated input wattage of the system as defined in §101. LED lighting system wattage shall be tested in accordance with Reference Joint Appendix JA8 or IES LM-79-08. The maximum rated input wattage shall be listed on a permanent, pre-printed, factory-installed label as specified by Underwriters Laboratories (UL).

~~Other~~ G. Miscellaneous Lighting Systems

§130~~(c)5~~(d)6

~~The wattage for all other lighting equipment (lighting systems that are not addressed in §130 (c) 1-4) shall be the maximum rated wattage of that lighting system, or operating input wattage of the system, listed on a permanent factory-installed label, or published in manufacturer's catalogs, based on independent testing lab reports as specified by UL 1574 or UL 1598.~~

This method applies only to lighting systems which have not already been addressed by another subsection of §130(d), and is primarily intended to address new technologies. This method shall not be applied to incandescent, fluorescent, HID, or LED luminaires because these lighting technologies are already addressed in different subsections of §130(d).

The wattage of all other miscellaneous lighting equipment shall be the maximum rated wattage of the lighting equipment, or operating input wattage of the system, listed on a permanent, pre-printed, factory-installed label, or published in manufacturer's catalogs, based on independent testing lab reports as specified by UL 1574 or UL 1598.

H. GU-24 Lamps, Luminaires, and Adaptors

§130(e)

GU-24 Lamps, Luminaires, and Adaptors installed in California shall meet the following requirements:

1. Lamps with GU-24 bases shall have a minimum efficacy no lower than specified in Table 150-C.
2. The wattage of luminaires with GU-24 sockets shall be the operating input wattage as listed on a permanent, pre-printed, factory-installed label on the luminaire housing, as specified by UL. Luminaires with GU-24 sockets shall not be rated for any lighting system that has an efficacy lower than specified in Table 150-C.
3. Luminaires with GU-24 sockets shall not have modular components allowing conversion to any lighting system that has an efficacy lower than specified in Table 150-C.
4. There shall be no adaptors that convert a GU-24 socket to any other type of lighting system that has an efficacy lower than specified in Table 150-C.

Example 5-6~~27~~

Question

What is the wattage of a 6 ft length of track lighting that has three 150 W listed fixtures with 60 W, medium base lamps proposed, assuming this track is not equipped with a current limiter?

Answer
Based on medium base socket fixtures the total wattage is 450 W (three fixtures at 150 listed W each).
Based on the length of track the wattage is 270 W (6 ft x 45 w/ft).
Therefore, the actual lighting power of the track is the larger of the two, or 450 W.

Example 5-7~~28~~

Question

What is the wattage of a 20-foot track system that is equipped with an integral current limiter rated at 400 watts?

Answer

If the integral current limited has been certified to the Energy Commission, t~~T~~he wattage of the track is the higher of:
~~15~~12.5 w/lf X 20 ft of track = ~~300~~250 watts, or
the wattage rating of the current limiter which is 400 watts.
Therefore, the wattage of this track is the greater of the two, or 400 watts.
If the integral current limiter has not been certified to the Energy Commission, this method for determining wattage shall not be used.

Example 5-8~~29~~

Question

If in the example above, the track is not equipped with a current limiter and is equipped with 350 watts of track heads, what would be the wattage of the track?

Answer

In the absence of a current limiter, the wattage of the track is the higher of:
the maximum relamping rated wattage of all of the luminaires included in the system (350 watts), or
45 watts per linear foot of the track which is 45 w/lf X 25 ft = 1,125 watts.
Therefore, the wattage of the track is 1,125 watts.

Example 5-9~~30~~

Question

A 20-amp branch circuit is supplying two line-voltage tacks. Only one of the tracks is equipped with an integral current limiter. How are the wattages of the tracks on this branch circuit is determined?

Answer

The wattage of the track may be calculated using one of the following options:
Option 1. The wattage of the current limiter (or~~15~~12.5W /ft if greater), plus 45W/ft of the second track, or
Option 2. The VA of the branch circuit that supplies both tracks.

DRAFT

~~Automatic Lighting Control Credits~~

5.5.4 Reduction of Wattage Through Controls

§146(a)~~4~~ 2

The controlled watts of connected lighting within the building may be adjusted to take credit for the benefits of certain types of automatic lighting controls. A list of the controls that qualify for these credits is shown in Table146-~~A~~C in the Standards.

The lighting control credits set out "Power Adjustment Factors~~.~~" (PAF). These are multipliers that allow the actual lighting power to be reduced, giving a lower adjusted lighting power. This makes it easier to meet the allowed lighting power requirement. A credit is only permitted when the control types indicated in Table146-~~A~~C are used.

In order to qualify for the power savings adjustment, the control system or device must be certified to the Energy Commission (see Section 5.2.1 **Error! Reference source not found.**~~Lighting Equipment Certification~~), and must control all of the fixtures for which credit is claimed; only controlled luminaires are eligible for lighting control credit. Exit way, emergency, egress and other lighting systems that are on a separate circuit and are not controlled by a qualifying control device, are not eligible for these credits. PAFs shall not be available for lighting controls that are required by Title 24, Part 6.

At least 50% of the light output of the controlled luminaire must fall within the applicable type of space listed in Standards Table146-~~A~~C. Additionally, credits may not be combined, with the exception of those listed as combined controls in Standards Table 146-~~A~~C.

~~1.~~A. Multi-Level Occupant Sensors/Switching

A~~n~~ multi-level occupant sensor combined with multi-level circuitry and switching in accordance with §146(a)2D, used in ~~some spaces may qualify for the power adjustment factor. Eligible spaces include~~ any space ≤ to 250 square feet enclosed by floor to ceiling partitions, any size classrooms, corridors, conference rooms, or waiting rooms qualifies for a power adjustment factor. The multi-level occupant sensor must be certified to the Energy Commission according to the applicable requirements in §119, and shall meet the multi-level lighting control requirements of §131(b) in the Standards, including the following:

a. The sensor shall have an automatic OFF function that turns off all the lights within 30 minutes after the area has been vacated. For example, the sensor may turn off the lights in five minutes after the area has been vacated because 5 minutes is within 30 minutes.

b. The sensor shall have either an automatically or manually controlled ON function.

c. The sensor shall have wiring capabilities so that each switch function activates a portion of the lights.

d. One control step must be able to activate between ~~5~~30-70% of the design lighting power in a room either through an automatic or manual action, and may be a switching or dimming system~~, and one step must activate less than 35% of the design lighting power. The multi-level control can be accomplished by switches "downstream" of the occupancy sensor~~.

e. The lighting shall achieve a reasonably uniform level of illuminance.

In addition, the occupant sensor must meet the "multi-level circuitry" requirements described in the following section.

Occupant Sensors with multi-level circuitry

An occupant sensor used in a room ~~small office (~~less than or equal to 250 ft^2~~-~~) shall have the following features (§146(a)2D ~~E~~):

a. Upon entering the room, a first stage of control activates between 3~~5~~0-70% of the lights in the space automatically or by manually turning on a switch.

b. After that action occurs, the following actions must be able to occur based upon manual control by the occupant:
   i. Activating the alternate set of lights.
   ii. Activating 100% of the lights.
   iii. Deactivating all lights.

c. When the room is unoccupied, all of the lights must automatically turn off.

d. When the room is reoccupied, no more than 70% of the lights can be turned back on automatically or from a single switch action. This prevents the use of standard line voltage switches to perform this type of control. This control can be accomplished by special bi-level occupancy sensors or by the use of a standard occupancy sensor and a sentry switch that defaults back to the off position when it is de-energized.

Non-qualifying Circuit for Occupancy Sensor Credit Example

Figure 5-1~~Figure 5-16~~ shows an occupant sensor wired in series with a conventional double wall switch. This circuit meets the mandatory lighting control requirements including multi-level control in §131(b) and the shut-off requirements in §131(d). But in this circuit does not qualify for the control credits for a occupancy sensor with "multi-level circuitry" as described in §146(a)4 because if the occupant leaves the room with all of the lights on, the next time ~~she~~the occupant comes back into the room the occupant sensor will turn all of the lights back on. The requirement in §146(a)~~4~~2D says that the first level of lighting to come back on must "activate between ~~5~~30% -70% of the lights."

~~If the conventional switches were replaced with sentry switches which return both switches to the off position each time power is interrupted for an extended periods of time, this would then quality for the compliance credit for occupancy sensors with "multi-level circuitry" as described in §146(a)4.~~

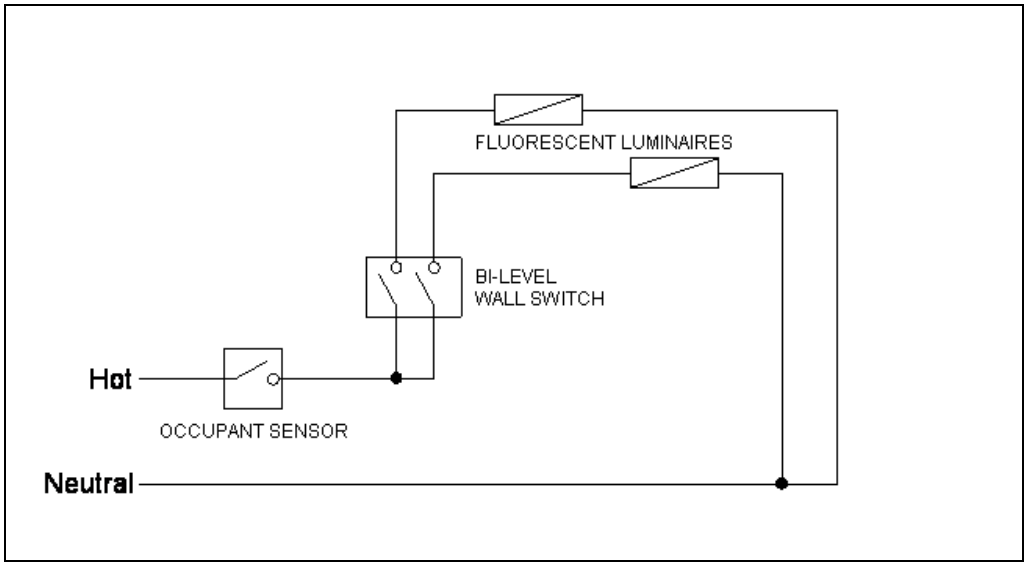

Figure 5-1~~16~~ – Occupancy Sensor with Manual Multi-level Switches

If the conventional switches were replaced with electrically held, normally open, latching wall switches (sometimes called a sentry switch), which returns both switches to the off position each time power is interrupted for an extended periods of time, this would then quality for the compliance credit for occupancy sensors with "multi-level circuitry" as described in §146(a)4. The electrically held, normally open, latching wall switch must be used in conjunction with an occupancy sensor to provide manual on/automatic off operation as shown in Figure 5-17.

Latching Wall Switch

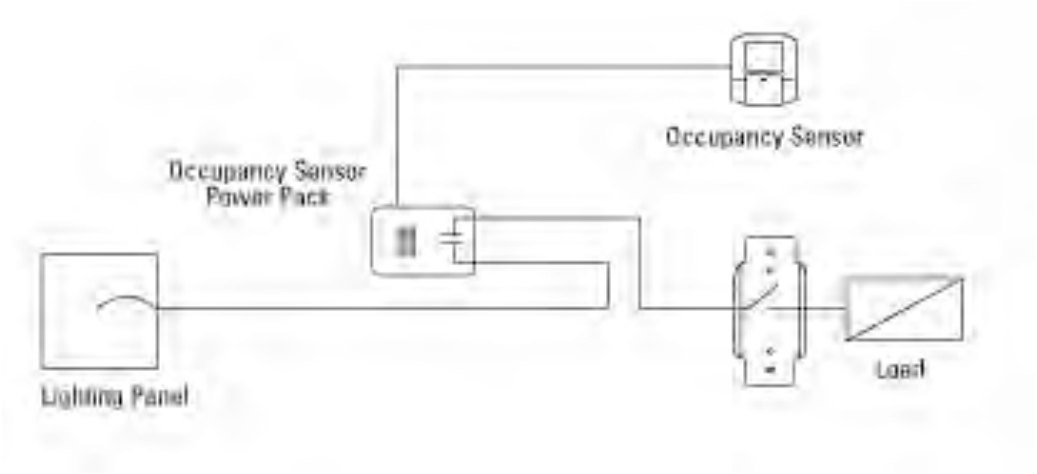

Figure 5-2~~17~~ – Electrically Held, Normally Open, Latching Wall Switch With Occupancy Sensor

~~Private Office~~Small Rooms (≤250 ft^2) with an Occupant Sensor and Multi-Level Controls Example

The schematic in Figure 5-~~Figure 5-17~~ shows a private office with an occupant sensor and multi-level controls. The luminaires remain off unless manually switched on by the occupant either through a manual action by the occupant or automatically to between ~~5~~30-70% of the design lighting power; and switch off automatically shortly after the occupant has left the space. This time delay can be varied but must be 30 minutes or less. The occupant sensor is integrated into the switch faceplate. A double wall switch is required, to allow override of each circuit separately. Each luminaire has three lamps powered by two ballasts in an "inboard/outboard" arrangement; the control system supplies each luminaire with two switched hot wires and one neutral. This system qualifies for a power adjustment factor of 0.20. Occupant sensing systems should be set to manual-on wherever possible to maximize energy savings.

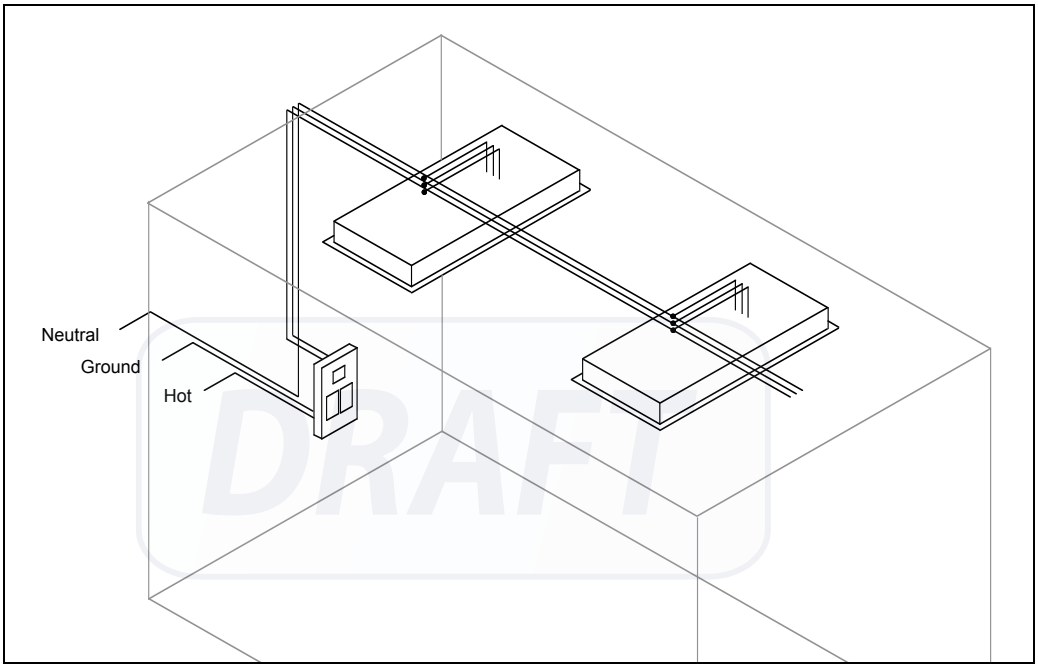

Figure 5-3~~18~~ – Occupant Sensors with Multi-Level Control: "Inboard/Outboard" Approach.

~~***Other Control Credits***~~

~~Table 146-A of the Standards also provides control credits for the following technologies and spaces:~~

B. Hallway/Stack Multi-Level Occupancy Sensor

Multi-level ~~O~~occupant sensor ~~controlled multi-level switches~~ or occupant sensor controlled dimming systems that reduce the lighting power at least 50% when no persons are present, in the following types of spaces qualify for a PAF:

a. ~~h~~Hallways of hotel/motels

b. ~~c~~Commercial and industrial storage stack areas (maximum two aisles per sensor), and

c. ~~l~~Library stacks (maximum two aisles per sensor).

This can be accomplished by placing half of the lighting in these areas on an occupancy sensor and the remainder on a manual switch. Only the fraction of the lighting that is on the occupancy sensor qualifies for the credit (§146(a)2~~4~~D "controlled watts of any luminaire…").

To qualify for the PAF the multi-level occupant sensor must be certified to the Energy Commission according to the applicable requirements in §119.

If an occupant sensor controlled dimming system is used to qualify for the PAF, all dimming ballasts for T5 and T8 linear fluorescents shall be electronic and shall be certified to the Energy Commission with a minimum relative system efficiency (RSE) in accordance with Table 146-D. Please see Chapter 5.x.x for additional information about RSE.

C. Dimming Systems for Hotels/Motels, Restaurants, Auditoriums, and Theaters.

Dimming systems including manual and multi-scene programmable systems in hotels/motels, restaurants, auditoriums, and theaters qualify for a PAF. To qualify for this PAF all dimming ballasts for T5 and T8 linear fluorescents shall be electronic and shall be certified to the Energy Commission with a minimum relative system efficiency (RSE) in accordance with Table 146-D. Please see Chapter 5.x.x for additional information about RSE

D. Manual Dimming of Dimmable Electronic Ballasts all Buildings

Manual dimming ~~with automatic load control~~ of dimmable electronic ballasts in all building types qualifies for a PAF. To qualify for this PAF, all dimming ballasts for T5 and T8 linear fluorescents shall be electronic and shall be certified to the Energy Commission with a minimum relative system efficiency (RSE) in accordance with Table 146-D. Please see Chapter 5.x.x for additional information about RSE. ~~. This control system allows load shedding (dimming lights) initiated by the utilities or other~~

~~grid system operators in the event of an electricity shortage. To qualify for this credit the dimming system in the building must have a control system that is ready to respond to a load curtailment or real time pricing signal. Such a system is enabled to dim all lights receiving the control credit below a fixed setting or to a fraction of their setting at the time the signal is received.~~

E. Demand Responsive Lighting Control for all Buildings

A demand responsive lighting control allows load shedding (dimming or switching off of lights) initiated by the utilities or other grid system operators in the event of an electricity shortage. To qualify for this PAF the lighting must be controlled by a control system that is ready to respond to a load curtailment or real time pricing signal. Such a system is enabled to dim or switch off the lights receiving the control credit below a fixed setting or to a fraction of their setting at the time the signal is received.

There are two types of demand response lighting control systems that qualify for a PAF in all buildings. Only those lamps that are controlled through the demand responsive lighting control qualify for this PAF. The two types of control systems are as follows:

a. A demand responsive lighting control that reduces lighting power consumption in response to a demand responsive signal through the use of multi-level switching. The multi-level switching shall meet the uniformity requirements of §131(b). Only those lamps that are switch off when receiving the demand responsive signal qualify for this PAF.

   This PAF shall not be available for lighting controls required by Title 24, Part 6.

b. A demand responsive lighting control that reduces lighting power consumption in response to a demand responsive signal when used in combination with manual dimming of dimmable electronic ballasts.

   To qualify for this PAF, all dimming ballasts for T5 and T8 linear fluorescents shall be electronic and shall be certified to the Energy Commission with a minimum relative system efficiency (RSE) in accordance with Table 146-D. Please see Chapter 5.x.x for additional information about RSE.

F. Combined Controls

Combined controls (either an occupancy sensor with daylighting controls or an occupancy sensor with manual dimming) for any space
less than or equal to 250 ft^2 within a daylit area and enclosed by floor-to-ceiling partitions, or any size classroom, corridor, conference or waiting room.

The power adjustment factors in Standards Table 146-A may not be combined, with the exception of those allowed under the "combined controls" section.

Hotel Corridor with Occupant Sensors and Multi-Level Controls Example

The schematic in Figure 5-~~Figure 5-18~~ shows a hotel corridor with occupant sensors and multi-level controls. Hotel/motel corridors are eligible for lighting power control credits if they are equipped with occupant sensor controlled multi-level switches or dimming systems that reduce the lighting power at least 50% when no people are present. Luminaires are wired on alternate circuits so that half remain on permanently, and the other half switch on automatically when an occupant is detected. Two occupant sensors are mounted in opposite corners of the ceiling and operate at low voltage supplied by a power pack behind the switch faceplate. The occupant sensors are connected, to ensure that the system can detect hotel guests at either end of the corridor. The control system supplies each luminaire with one switched hot wire and one neutral. A double wall switch is provided, although it is not required in public areas (§131(a) in the Standards). This system qualifies for a power adjustment factor of 0.25. Note that external staircases and corridors are classified as outdoor lighting and so are required to be controlled by a photoelectric switch or time clock.

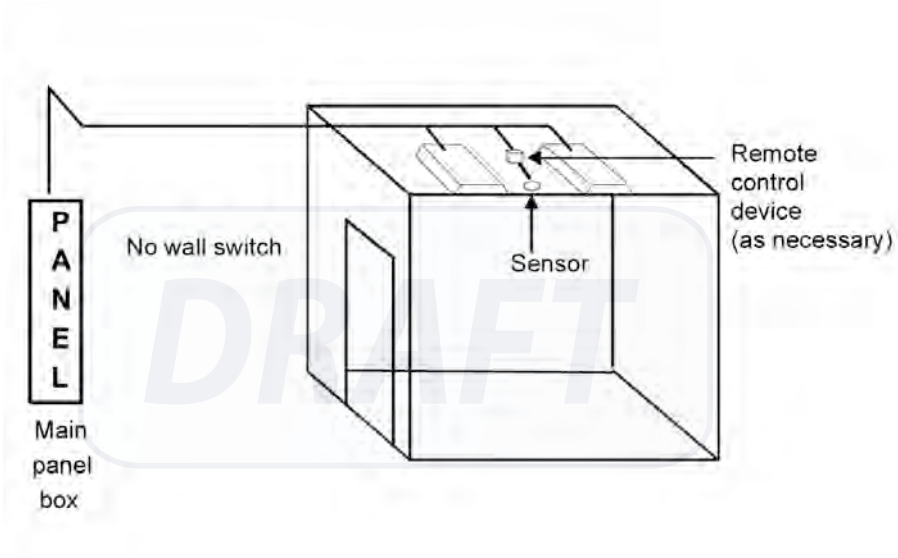

Figure 5-19– Occupant Sensors with Multi-Level Control: Alternate Luminaire Approach

G. Daylighting Control Credits

§146(a)4. E.

Control credits as defined by §146(a)~~4~~2E in the Standards permit a reduction in the computed lighting power in a building based on special allowances for installing controls that save more energy than the basic mandatory controls required by §131. These credits are based upon power adjustment factors (PAFs) which

when multiplied by the wattage of the controlled lighting, is subtracted from the installed lighting power to yield the calculated lighting power. A lighting system prescriptively complies when the calculated lighting power is less than or equal to the allowed indoor lighting power.

Under the performance compliance approach, a~~A~~utomatic daylighting control credits for side-lighting and skylights, listed Table 146-~~A~~C, are NOT available when automatic daylighting controls are ~~installed as a result of~~required under the mandatory ~~requirements,~~or prescriptive ~~requirements or performance approach compliance~~standards. These credits are only available in spaces where daylighting and controls are not already required by mandatory requirements or prescriptive or performance approach requirements. For example, if performance approach is used to install skylights in addition to what is prescriptively required and the daylit area is greater than 2500 square feet, control credits are not available for the automatic daylighting controls associated with additional skylights since there are mandatory requirements for these controls.

Automatic daylight control devices include stepped dimming, continuous dimming, and stepped switching devices. For definitions of these terms see §101 of the standards or the definitions in the Joint Appendix I.

Installing controls that have power adjustment factors increases the efficiency of the lighting system and this efficiency is captured in both the prescriptive and performance documentation of lighting system wattage. The control credits can be used when more installed lighting capacity is required, or for exceeding the requirements of the energy code to gain credit for building rating systems such as LEED[1] or CHPS[2].

For controlled lighting to receive a reduction in its calculated wattage from a daylighting control power adjustment factor, it must be in the daylit area and comply with the restrictions associated with the specific power adjustment factor.

For automatic daylighting controls with windows, the PAF is a function of dimming versus switching controls, the glazing VLT (Section 3.2.8) and the window to wall ratio (WWR) [Section 5.2.1.4
Error! Reference source not found.].

For automatic multi-level daylighting controls with skylights, the power adjustment factors are only applied to controlled general lighting in the daylit area under skylights. To qualify for the power adjustment credits, the control must conform to the requirements of §119(i) automatic multi-level daylighting controls, and the skylight glazing or diffuser must have a haze rating greater than 90%. The haze rating greater than 90% indicates that the glazing

[1] LEED stands for Leadership in Energy and Environmental Design and is a rating program of the U. S. Green Building Council.

[2] CHPS is the Collaborative for High Performance Schools, which has a rating program for K-12 schools, which is based in part on exceeding the Title 24 standards.

is diffusing. Ask the manufacturer for documentation of the haze rating of the skylight glazing or diffuser before specifying their product.

The power adjustment factors for automatic multi-level daylighting controls with skylights are a function of the effective aperture, EA, and the lighting power density of the controlled lighting, LPD, as given by the following equation:
PAF = 10 x EA – (LPD/10) + 0.2
The calculation of effective aperture, EA, is described in Section 5.2.1.4
Error! Reference source not found..
Daylighting control credits are only available for luminaires within daylit zones, as defined in Section **Error! Reference source not found.**~~5.2.1.4 Daylighting Controls~~. The daylight control system shall comply with §119(e), §119(f), and §119(g). The power adjustment factor is a function of the lighting power density of the general lighting in the space, and the effective aperture of the windows or skylights.

Bookstack Area with an Automatic Daylight Dimming System
The schematic in Figure 5-4~~Figure 5-19~~ shows a library bookstack area with an automatic daylight dimming system. The luminaires remain off when the space is daylit, and dim up progressively when daylight levels are low. The photocell is mounted in the ceiling, looking out of the window to provide open-loop control. Each luminaire has a dimming ballast; the control system supplies each luminaire with one switched hot, one neutral and one control wire (consisting of a low voltage twisted pair). A double wall switch is provided, although it is not required in public areas [§131(a) in the Standards]. This system is installed in a room with a 30% window wall ratio and clear double-pane windows with 65% visible light transmittance; it therefore qualifies for the maximum power adjustment factor of 0.40.

DRAFT

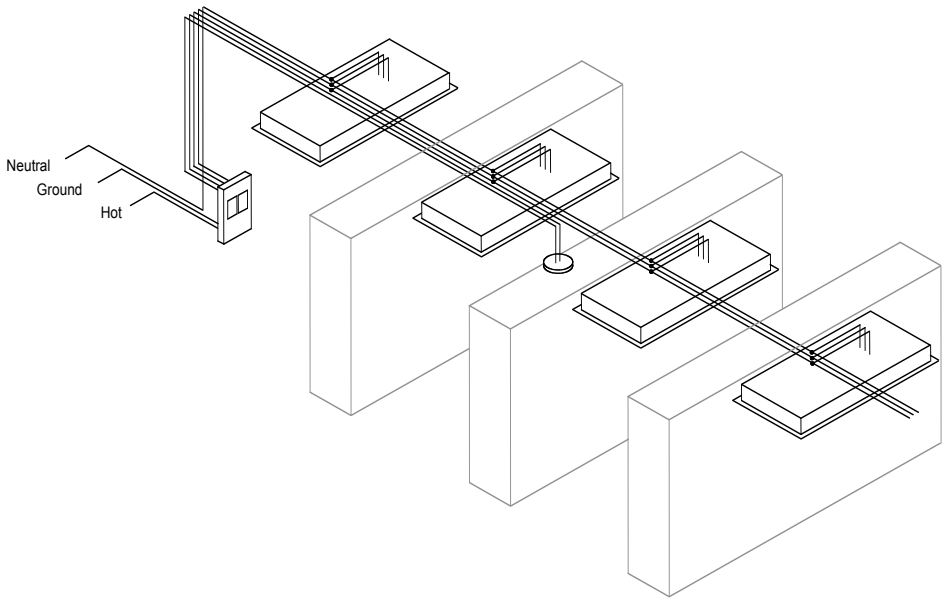

Figure 5-~~419~~ – Photocell Dimming

DRAFT

Table 5-18 – Standards Table 146-A Lighting Power Adjustment Factors

~~TYPE OF CONTROL~~	~~TYPE OF SPACE~~	~~FACTOR~~
~~Occupant sensor with "manual ON" or bi-level automatic ON combined with multi-level circuitry and switching~~	~~Any space ≤ 250 square feet enclosed by floor-to-ceiling partitions; any size classroom, corridor, conference or waiting room~~	~~0.20~~
~~Occupant sensor controlled multi-level switching or dimming system that reduces lighting power at least 50% when no persons are present~~	~~Hallways of hotels/motels~~	~~0.25~~
	~~Commercial and Industrial Storage stack areas (max. 2 aisles per sensor)~~	~~0.15~~
	~~Library Stacks (maximum 2 aisles per sensor)~~	~~0.15~~
~~Dimming system~~		
~~– Manual~~	~~Hotels/motels, restaurants, auditoriums, theaters~~	~~0.10~~
~~– Multiscene programmable~~	~~Hotels/motels, restaurants, auditoriums, theaters~~	~~0.20~~
~~Manual dimming with automatic load control of dimmable electronic ballasts.~~	~~All building types~~	~~0.25~~
~~Combined controls~~		
~~Occupant sensor With "manual ON" or bi-level automatic ON combined with multi-level circuitry and switching in conjunction with daylighting controls~~	~~Any space ≤ 250 square feet within a daylit area and enclosed by floor-to-ceiling partitions, any size classroom, corridor, conference or waiting room.~~	~~0.10 (may be added to daylighting control credit)~~
~~Manual Dimming with Dimmable Electronic Ballasts and Occupant sensor with "manual ON" or automatic ON to less than 50% power and switching~~	~~Any space ≤ 250 square feet enclosed by floor-to-ceiling partitions; any size classroom, corridor, conference or waiting room~~	~~0.25~~
~~Automatic Daylighting Controls with Windows (Stepped Switching or Stepped Dimming/Continuous Dimmed)~~		
~~(Numbers on the left side of a slash apply to Stepped Switching or Stepped Dimming. Numbers on the right side of a slash apply to Continuous Dimming)~~		

~~WINDOWS – Window Wall Ratio~~			
~~Glazing Type~~	~~< 20%~~	~~20% to 40%~~	~~> 40%~~
~~VLT ≥ 60%~~	~~0.20/0.30~~	~~0.30/0.40~~	~~0.40/0.40~~
~~VLT ≥ 35 and < 60%~~	~~0/0~~	~~0.20/0.30~~	~~0.30/0.40~~
~~VLT < 35%~~	~~0/0~~	~~0/0~~	~~0.20/0.40~~
~~Automatic Multi-Level Daylighting Controls with Skylights~~			

DRAFT

~~TYPE OF CONTROL~~	~~TYPE OF SPACE~~	~~FACTOR~~
~~Glazing Type - Skylights~~	~~Factor~~	
~~Glazing material or diffuser with ASTM D1003 haze measurement greater than 90%~~	$10 \times \text{Effective Aperture} - \frac{\text{Lighting Power Density}}{10} + 0.2$ ~~WHERE~~ ~~Effective Aperture is as calculated in the Equation 146-A.~~ ~~Lighting Power Density is the lighting power density of general lighting~~	

TABLE 5-xxx LIGHTING POWER ADJUSTMENT FACTORS

TYPE OF CONTROL		*TYPE OF SPACE*	*FACTOR*
Multi-level occupant sensor (see Note 2) combined with multi-level circuitry and switching in accordance with Section 146(a)(2)(D)		*Any space ≤ 250 square feet enclosed by floor-to-ceiling partitions; any size classroom, corridor, conference or waiting room.*	*0.20*
Multi-level occupant sensor (see Note 2) that reduces lighting power at least 50% when no persons are present. May be a switching or dimming (see Note 3) system.		*Hallways of hotels/motels , multi-family, dormitory, and senior housing*	*0.25*
		Commercial and Industrial Storage stack areas (max. 2 aisles per sensor)	*0.15*
		Library Stacks (maximum 2 aisles per sensor)	*0.15*
Dimming system	*Manual*	*Hotels/motels, restaurants, auditoriums, theaters*	*0.10*
	Multiscene programmable	*Hotels/motels, restaurants, auditoriums, theaters*	*0.20*
Demand responsive lighting control that reduces lighting power consumption in response to a demand response signal. (See Note 1)		*All building types*	*0.05*
Manual dimming of dimmable electronic ballasts. (see Note 3)		*All building types*	*0.10*
Demand responsive lighting control that reduces lighting power consumption in response to a demand response signal when used in combination with manual dimming of dimmable electronic ballasts. (see Note 3)		*All building types*	*0.15*
Combined controls	*Multi-level occupant sensor (see Note 2) combined with multi-level circuitry and switching in accordance with Section 146(a)(2)(D) combined with automatic multi-level daylighting controls*	*Any space ≤ 250 square feet within a daylit area and enclosed by floor-to-ceiling partitions, any size classroom, corridor, conference or waiting room. The PAF may be added to the daylighting control credit*	*0.10*

DRAFT

	Manual dimming of dimmable electronic ballasts (see Note 3) when used in combination with a multi-level occupant sensor combined with multi-level circuitry and switching in accordance with Section 146(a)(2)(D).	*Any space ≤ 250 square feet enclosed by floor-to-ceiling partitions; any size classroom, corridor, conference or waiting room*				*0.25*
Automatic multi-level daylighting controls (See Note 1)	*Total primary sidelit daylight areas less than 2,500 ft² in an enclosed space and all secondary sidelit areas. (see Note 4)*		*Effective Aperture*			
		General Lighting Power Density (W/ft²)	*>10% and ≤20%*	*>20% and ≤35%*	*>35% and ≤65%*	*> 65%*
		All	*0.12*	*0.20*	*0.25*	*0.30*
	Total skylit daylight areas in an enclosed space less than 2,500 square feet, and where glazing material or diffuser has ASTM D1003 haze measurement greater than 90%		*Effective Aperture*			
		General Lighting Power Density (W/ft²)	*0.6% ≤ EA < 1%*	*1% ≤ EA < 1.4%*	*1.4% ≤ EA < 1.8%*	*1.8% ≤ EA*
		LPD < 0.7	*0.24*	*0.30*	*0.32*	*0.34*
		0.7 ≤ LPD< 1.0	*0.18*	*0.26*	*0.30*	*0.32*
		1.0 ≤ LPD < 1.4	*0.12*	*0.22*	*0.26*	*0.28*
		1.4 ≤ LPD	*0.08*	*0.20*	*0.24*	*0.28*

NOTES FOR TABLE 146-C:

1. *PAFs shall not be available for lighting controls required by Title 24, Part 6.*
2. *To qualify for the PAF the multi-level occupant sensor shall comply with the applicable requirements of Section 119.*
3. *To qualify for the PAF all dimming ballasts for T5 and T8 linear fluorescent lamps shall be electronic and shall be certified to the Energy Commission with a minimum RSE in accordance with Table 146-D.*
4. *If the primary sidelit daylight area and the secondary sidelit daylight area are controlled together, the PAF is determined based on the secondary sidelit effective aperture for both the primary sidelit daylight area and the secondary sidelit daylight area.*

Example 5-10~~31~~

Question

A lot of occupant sensors can be set to “manual-on” or “automatic-on” – which one is better?
Answer

The nonresidential lighting Standards allow either manual–or automatic-on, although best practice guidance recommends manual on to avoid nuisance switching, for instance during daylight hours when lights are not required, or when someone enters a room only briefly, or when someone passes the open doorway of a room with an occupant sensor. Manual-on also maximizes energy savings. Automatic-on may offer added convenience in storerooms, restrooms and similar spaces.

Example 5-11~~32~~

Question

A multi-scene programmable controller is used to control display lighting in a store. Can a power adjustment factor be applied?

Answer

The 0.2 power adjustment factor for multiscene programmable controllers is only available for the general lighting of hotels/motels, restaurants, auditoriums and theaters. However, special lighting power allowances are available for retail display lighting under the tailored compliance method.

Example 5-12~~33~~

Question

Can I provide multi-level control with occupant sensors just by wiring an occupant sensor in series with a wall switch? Will such a combination qualify for a power adjustment factor?

Answer

This arrangement will meet the mandatory requirements for multi-level control in §131(b) and automatic shut-off control in §131(d). But this configuration does not qualify for a power adjustment factor credit because if one leaves the room with all of the lights on, the next time the lights are turned on, all the lights will be on. Special circuitry is required. Many control system manufacturers offer products specifically for bi-level occupant sensing systems, many of which use a double wall switch with an occupant sensor integrated into the switch faceplate, or an integrated power pack that supplies an occupant sensor in the ceiling. See Section 5.4.4 Non-qualifying Circuit for Occupancy Sensor Credit Example~~Non-qualifying Circuit for Occupancy Sensor Credit Example~~.

Example 5-13~~34~~

Question

Where can I find guidance on how to commission lighting controls? I need information on where to position sensors, how to set time delays and how to get the best performance from my system.

Answer

Many manufacturers provide comprehensive guidance on the design and commissioning of systems; this guidance is often tailored to the characteristics of their own products and is therefore the best advice available. More general information can be obtained from best practices guidance such as The Advanced Lighting Guidelines which can be downloaded free of charge at http://www.newbuildings.org, or from the Lighting Controls Association website http://www.aboutlightingcontrols.org.

DRAFT

5.7 Compliance and Enforcement

5.7.1 Indoor Lighting Compliance Documents ~~Lighting Plan Check Documents~~

At the time a building permit application is submitted to the building department, the applicant also submits plans and energy compliance documentation. This section describes the recommended forms and procedures for documenting compliance with the lighting requirements of the Standards. It does not describe the details of the requirements. The following discussion is addressed to the designer preparing construction and compliance documents, and to the building department plan checkers who are examining those documents for compliance with the Standards.

The use of each form is briefly described below, and complete instructions for each form are presented in the following subsections. These forms may be included in the lighting equipment schedules on the plans, provided the information is in a similar format as the suggested form.

- ~~*LTG-1-C: Certificate of Compliance*:~~
  ~~This form is required for every job, and it is required to appear on the plans.~~
- ~~*LTG-2-C: Interior Lighting Schedule:*~~
  ~~This form is required for all submittals.~~
- ~~*LTG-3-C: Portable Lighting Worksheet:*~~
  ~~This form is required for all submittals.~~
- ~~*LTG-4-C: Lighting Controls Credit Worksheet:*~~
  ~~This form should only be required when calculating control credit watts. See Standards Table 146-A for lighting control credits.~~
- ~~*LTG-5-C: Interior Lighting Power Allowance Worksheet:*~~
  ~~This form is required when calculating the Lighting Power Allowance using the Complete Building, Area Category, or Tailored Method for compliance.~~
- ~~*LTG-6-C: Tailored Method Worksheet:*~~
  ~~This form should only be required when calculating the Lighting Power Allowance using the Tailored Method.~~
- ~~*LTG-7-C: Room Cavity Ratio Worksheet:*~~
  ~~This form should only be required when using the Tailored Method. The Room Cavity Ratio is required in the Tailored Method Worksheet.~~
- ~~*LTG-8-C: Common Lighting Systems Method:*~~
  ~~This form is only used when showing compliance using the Common Lighting Systems Method.~~
- ~~*LTG-9-C: LINE VOLTAGE TRACK LIGHTING WORKSHEET:*~~
  ~~This form is only used when line voltage track lighting is used.~~
- ~~*OLTG-4-C: Worksheet for Signs:*~~
  ~~See instructions for OLTG-4-C, Sign Worksheet in Chapter 6, Outdoor Lighting and Signs Chapter.~~

~~5.12.1 LTG-1-C: Certificate of Compliance~~

~~The LTG-1-C Certificate of Compliance form is in three parts. Each part; if required below must appear on the plans (usually near the front of the electrical drawings). A copy of these forms should also be submitted to the building~~

~~department along with the rest of the compliance submittal at the time of building permit application. With building department approval, the applicant may use alternative formats of these forms (rather than the official Energy Commission forms), provided the information is the same and in a similar format.~~

~~LTG-1-C, Part 1 of 4 and 2 of 4 are required for all submittals. LTG-1-C, Part 3 of 4 submittal is only required if control credits are claimed.~~

~~LTG-1-C Part 1 of 4~~

~~Project Description~~

~~1.PROJECT NAME is the title of the project, as shown on the plans and known to the building department.~~

~~1.DATE is the date of preparation of the compliance submittal package. It should be on or after the date of the plans, and on or before the date of the building permit application.~~

~~1.PROJECT ADDRESS is the address of the project as shown on the plans and as known to the building department.~~

~~1.PRINCIPAL DESIGNER - LIGHTING is the person responsible for the preparation of the lighting plans, one of two people who sign the STATEMENT OF COMPLIANCE (see below). The person's telephone number is given to facilitate response to any questions that arise.~~

~~1.DOCUMENTATION AUTHOR is the person who prepared the energy compliance documentation. This may or may not be the principal designer (it may be a person specializing in energy standards compliance work). This person is not subject to the Business and Profession's Code. The person's telephone number is given to facilitate response to any questions that arise.~~

~~1.ENFORCEMENT AGENCY USE is reserved for building department record keeping purposes.~~

~~General Information~~

~~1.DATE OF PLANS is the last revision date of the plans. If the plans are revised after this date, it may be necessary to resubmit the compliance documentation to reflect the altered design. The building department will determine whether or not the revisions require this.~~

~~2.BUILDING CONDITIONED FLOOR AREA has specific meaning under the Standards. Refer to Joint Appendix I for a discussion of this definition.~~

~~3.The number entered here should match the floor area entered on form ENV-1-CC-05.~~

~~4.CLIMATE ZONE of the building. Refer to Joint Appendix I.~~

~~5.BUILDING TYPE is specified because there are special requirements for high-rise residential and hotel/motel guest room occupancies. All other occupancies that fall under the Nonresidential Standards are designated "Nonresidential" here. It is possible for a building to include more than one building type. See §149 in the Standards for the formal definitions of these occupancies.~~

~~6.CONDITIONED SPACE is a space that is directly or indirectly air-conditioned. Check this box if the building includes conditioned spaces where lighting systems are being installed. Tradeoffs are not allowed between conditioned and unconditioned spaces.~~

7. ~~UNCONDITIONED SPACE is a space that is not directly or indirectly air-conditioned. Check this box if the building includes unconditioned spaces where lighting systems are being installed. Tradeoffs are not allowed between conditioned and unconditioned spaces.~~
8. ~~INDOOR AND OUTDOOR SIGNS are internally illuminated signs that are located either indoor or outdoor. If these signs are present, the Form OLTG-4-C must be filled out along with either LTG-1-C or OLTG-1-C.~~
9. ~~PHASE OF CONSTRUCTION indicates the status of the building project described in the documents. Refer to Joint Appendix I for detailed definitions.~~
   - ~~NEW CONSTRUCTION should be checked for all new buildings, newly conditioned space (see §149 in the Standards) or for new construction in existing buildings (tenant improvements, see Section **????.**) that are submitted for envelope compliance.~~
   - ~~ADDITION should be checked for an addition which is not treated as a stand-alone building, but which uses Option 2 described in §149 in the Standards.~~
   - ~~ALTERATION should be checked for alterations to existing building lighting systems. See Section ???.~~
   - ~~METHOD OF COMPLIANCE indicates which method is being used and documented with this submittal:~~
   - ~~PERFORMANCE should be checked when the performance method is used to show compliance. All required performance documentation must be included in the plan check submittal when this method is used.~~
   - ~~COMPLETE BUILDING should be checked if the lighting system complies using the complete building method, as documented on the LTG-2-C Form~~
   - ~~AREA CATEGORY should be checked if the lighting system complies using the area category method, as documented on the LTG-2-C form~~
   - ~~TAILORED should be checked if the tailored method of lighting compliance, with supporting documentation (LTG-6-CC-05 and LTG-7-C) is submitted.~~
   - ~~COMMON LIGHTING should be checked if the common lighting method of lighting compliance, with supporting documentation (LTG-8-C) is submitted.~~

~~Lighting Mandatory Measures~~

~~This portion requests the location of notes clarifying the inclusion of the mandatory requirements. Notes should be included on the plans to demonstrate compliance with mandatory requirements of the Standards.~~

~~Following are prototype examples of the notes that should be rewritten to actual conditions. A note for each of the items listed should be included, even if the note states "not applicable".~~

~~Building Lighting Shut-off~~

~~The building lighting shut-off system consists of an automatic time switch, with a zone for each floor.~~

~~**Override for Building Lighting Shut-off**~~
~~The automatic building shut-off system is provided with a manual accessible override switch in sight of the lights. The area of override is not to exceed 5,000 square feet.~~
~~**Automatic Control Devices Certified**~~
~~All automatic control devices specified are certified; all alternate equipment shall be certified and installed as directed by the manufacturer.~~
~~**Fluorescent Ballast and Luminaires Certified**~~
~~All fluorescent fixtures subject to certification and specified for the projects are certified.~~
~~**Individual Room/Area Controls**~~
~~Each room and area in this building is equipped with a separate switch or occupancy sensor device for each area with floor-to-ceiling walls.~~
~~**Uniform Reduction for Individual Rooms**~~
~~All rooms and areas greater than 100 square feet and more than 0.8 watts per square foot of lighting load shall be controlled with Multi-level switching for uniform reduction of lighting within the room.~~

~~**Daylit Area Control**~~
~~All rooms that are greater than 250 square feet and contain windows and skylights, that allow for the effective use of daylight in the area shall have 50% of the lighting power in each daylit area controlled by a separate switch; or~~
~~The effective use of daylight throughout cannot be accomplished because the windows are continuously shaded by a building on the adjacent lot. Diagram of shading during different times of year is included on plans.~~
~~The above notes are only examples of wording. Each mandatory measure that requires a separate note should be listed on the plans.~~

~~To verify certification, use one of the following options:~~
~~The Energy Hotline (1-800-772-3300) can verify certification of appliances not found in the above directories.~~

- ~~The Energy Commission's Web Site includes listings of energy efficient appliances for several appliance types. The web site address is http://www.energy.ca.gov/efficiency/appliances/.~~
- ~~The complete appliance databases can be downloaded from the California Energy Commission's Internet~~

  ~~(http://www.energy.ca.gov/appliances/appliance/excel_based_files/). This requires database software (spreadsheet programs cannot handle some of the larger files). To use the data, a user must download the database file (or files), download a brand file and a manufacturer file and then decompress these files. The data can be sorted and manipulated.~~

~~Documenting the mandatory measures on the plans is accomplished through a confirmation statement, notes and actual equipment location as identified on the plans. The plans should clearly indicate the location and type of all mandatory control devices; such as manual switches, reduced level control, daylit area, controls, building shut-off and overrides, and exterior light controls.~~

~~*Lighting Worksheet*~~
~~Check the appropriate boxes to indicate which worksheet(s) are being included with the certificate of compliance.~~

~~***LTG-1-C Part 2 of 4***~~
~~Part 2 of LTG-1-C is used to indicate compliance by showing that the installed indoor lighting power is lower than the lighting power allowance.~~

~~*Installed Indoor Lighting Power for Conditioned and Unconditioned Spaces:*~~

- ~~Indicate the installed lighting for conditioned spaces from form LTG-2-C~~
- ~~Indicate installed lighting power from LTG-2-C, portable lighting from LTG-2-C, and any lighting controls credits from LTG-4-C. Sum to determine total installed lighting power.~~
- ~~Indicate lighting control credit for conditioned spaces form LTG-4-C~~
- ~~Indicate the conditioned space adjusted installed lighting power~~
- ~~Indicate the installed lighting for unconditioned spaces from LTG-2-C~~
- ~~Indicate lighting control credit for unconditioned spaces from LTG-4-C~~
- ~~Indicate the unconditioned space adjusted installed lighting power~~

~~*Allowed Indoor Lighting Power*~~

- ~~Indicate which method of compliance is being used and indicate the total allowance from the corresponding worksheet.~~

~~*Alternate Compliance*~~

- ~~Check the appropriate box if the performance or area category method is being used for compliance.~~

- ~~Indicate the allowed indoor lighting power for unconditioned spaces from LTG-5-C~~

~~*Mandatory Lighting Measures for Indoor Lighting and Daylit Areas*~~
~~The Mandatory Automatic Controls portion is where those devices that meet the mandatory control requirements are listed, that would include devices for building shut-off, individual room control and control of exterior lights.~~

1. ~~CONTROL LOCATION lists the location(s), room number(s), area number(s), or description of the controls and should match the plans.~~
2. ~~CONTROL IDENTIFICATION lists the symbol of the control and should match the plans.~~
3. ~~CONTROL TYPE lists the type of certified control device used to meet the mandatory automatic control requirement, such as automatic time switch, dimming, photosensor, etc.~~
4. ~~SPACE CONTROLLED lists the location of controlled lights.~~

~~Check the box(s) if the controls are used for daylighting.~~

~~*Notes to Field -This space is for use by the building department plans examiner to alert the field inspector to look for important inspection items.*~~
~~Typical controls may be covered by general notation.~~

~~LTG-1-C Part 3 of 4~~

~~LTG-1-C, Part 3 of 4 submittal is only required if control credits are claimed.~~
~~Controls for Credit in Conditioned and Unconditioned Spaces~~
~~The Controls for Credit portion is similar to the Mandatory Automatic Controls portion. The only difference is in the last column, LUMINAIRES CONTROLLED.~~

1. ~~CONTROL LOCATION lists the location(s) or room number(s) of the controls and should match the plans.~~
2. ~~CONTROL IDENTIFICATION lists the symbol of the control and should match the plans.~~
3. ~~CONTROL TYPE lists the type of certified control device used to meet the automatic control requirement. Such controls are, occupant, daylight, dimming sensors etc.~~
4. ~~LUMINAIRES CONTROLLED should list the luminaire type and quantity controlled for credit.~~
5. ~~TYPE should use the same name as on the plans.~~
6. ~~# OF LUMINAIRES should indicate the number of luminaires of that type that are controlled by the control type. A general plan notation on the plans may cover all typical controls.~~

~~This space is for use by the building department plans examiner to alert the field inspector to look for important inspection items.~~

~~LTG-1-C Part 4 of 4~~
~~Acceptance Requirements~~
~~The Designer is required to check the box for each type of lighting system in the building when an acceptance test is required. Below each box that is checked the Designer is required to list the equipment that must be tested and the number of systems to be tested in parentheses. The Designer should think abut who will be conducting the tests and list this person in the section titled "Test Performed By". Those who are allowed to conduct the tests are the installing contractor, design professional or an agent selected by the owner.~~

~~Statement of Compliance~~
~~The Statement of Compliance is signed by the person responsible for preparation of the plans for the building. This person is also responsible for the energy compliance documentation, even if the actual work is delegated to someone else (the Documentation Author described above). It is necessary that the compliance documentation be consistent with the plans. The Business and Professions Code governs who is qualified to prepare plans, and therefore to sign this statement; check the appropriate box that describes the signer's eligibility.~~
~~Applicable sections from the Business and Professions Code (based on the edition in effect as of August 2000), referenced on the Certificate of Compliance, are provided below.~~

~~5.12.3 LTG-2-C: Indoor Lighting Schedule~~

~~LTG-2-C, Part 1 of 2, is used to describe the lighting fixtures and control devices designed to be installed in the building. The Installed Lighting Power for Conditioned Spaces is calculated by completing this form.~~

~~1.LUMINAIRE NAMES shall be listed by name or symbol.~~

~~2.DESCRIPTION should indicate a short list of the technical features.~~

~~3.LAMP TYPE is the type of lamps such as T-8, T-5, high output (HO), etc.~~

~~4.NUMBER OF LAMPS PER LUMINAIRE is the number of lamps per luminaire.~~

~~5.WATTS PER LAMP is watts per lamp including ballast losses and ballast factor. This is not the nominal lamp wattage published by the manufacturer.~~

~~6.NUMBER OF BALLASTS PER LUMINAIRE is the number of ballasts per each luminaire.~~

~~7.WATTS PER LUMINAIRE is the total watts per luminaire including lamps, ballasts, and all loses and ballast factors. This number is equal to WATTS PER LAMPS multiplied by NUMBER OF LAMPS PER LUMINAIRE.~~

~~8.If CEC DEFAULT is checked, this indicates the wattage is a standard value from the data in ACM Manual Appendix NB. If this column is not checked, nonstandard values must be substantiated with manufacturer's data sheets.~~

~~9.NUMBER OF LUMINAIRES is the number of similar luminaires in the space.~~

~~10.INSTALLED WATTS is total installed watts for similar luminaire installed in the space, which is the product of WATTS PER LUMINAIRE and NUMBER OF LUMINAIRES.~~

~~Subtotal the total watts for each luminaire, add portable lighting watts, if any from Ltg-3-C, and subtract the control credits, if any, from form LTG-4-C. The results are the actual lighting power (adjusted) for conditioned spaces of the building. This total cannot be greater than the lighting power allowance calculated below.~~

~~LTG-2-C, Part 2 of 2, is used to describe the lighting fixtures and control devices designed to be installed in the building. The Installed Lighting Power for Unconditioned Spaces is calculated by completing this form.~~

~~The instructions for filling LTG-2-C, Part 2 of 2 are similar to instructions LTG-2-C, Part 2 of 1 described above, except this form is to be used for unconditioned spaces.~~

~~5.12.4 LTG-3-C: Portable Lighting Worksheet~~

~~LTG-3-C should be used to identify and account for all portable lighting fixtures in office areas in buildings, both planned and unplanned. Note that this applies to all office spaces with planned portable lighting systems regardless of the primary function area of the building and does not apply to enclosed (floor-to-ceiling permanent partition) office spaces with floor areas less than 250 ft^2. Use Table 1 for unspecified portable lighting systems. Most buildings with typical open office type of layouts should use this approach. Use Table 2 if the specific portable lighting systems to be installed in the office space are known and documented on the plans. The documentation must include specific features of the portable lighting, and identify the specific task areas that each portable~~

~~lighting equipment will illuminate. Use Table 3 if no portable lighting fixtures are planned for the office space(s) and if detailed documentation of the lighting levels by overhead lighting are provided to show that they meet the lighting requirements of that space.~~

~~If lighting system documentation shows less than 0.2 W/ft^2 of portable lighting, the designer must demonstrate that the lighting design meets lighting needs without additional portable lighting. This must be demonstrated by a detailed point calculation method analysis using a lighting simulation tool. Average illuminance calculations are not acceptable for determining that a lighting system meets lighting requirements of the space. All assumptions used in the simulation model of the lighting design must be submitted as an attachment to Form LTG-3-C. This documentation must include information on luminaire layout (accompanied by furniture layout including modular furniture walls, shelves and cabinets), location, brand, model, and performance characteristics of all luminaires in the space. In addition, the documentation must include the coefficient of utilization (CU) for the luminaires, luminaire spacing, surface reflectance, ballast factors, lamp lumens, various loss factors, and all lighting design calculations. The resultant minimum-to-maximum or minimum-to-average ratios (typically generated by lighting simulation tools) must also be included in the submittal. The designer is responsible for providing all of the information that the building inspector may need to clearly understand that less than 0.2 W/ft^2 of portable lighting will be needed, including describing the Design Intent (based on IESNA recommended design criteria) and including the target illumination ratios for comparison to the proposed lighting design.~~

~~Table 1 Portable Lighting not Shown on Plans~~

1. ~~ROOM # OR ZONE ID – Enter the name of the room number or zone ID for space(s) that have more than 250 square feet of floor area B. The DEFAULT lighting power density for this space is 0.2 w/ft^2.~~
2. ~~DEFAULT – 0.2 w/ft^2 is the default lighting power density for portable lighting.~~
3. ~~AREA (ft^2) – Enter room or zone office area for the floor area of the space identified in COLUMN A.~~
4. ~~TOTAL WATTS (B x C) – Enter the total watts for each room or zone by multiplying the values in COLUMNS B and C.~~
5. ~~COLUMN TOTALS – Sum the values in each of COLUMNS C and D and enter the result in the boxes at the bottom of Table 1A.~~

~~Table 2 Detailed Lighting Design - Portable Lighting Shown on Plans~~

1. ~~ROOM # OR ZONE ID – Enter the name of the room number or zone ID for the space(s) that contains the task area(s) for which specific portable lighting system(s) and associated task areas have been shown on the plans. Use a separate line for each task area.~~
2. ~~PORTABLE LIGHTING DESCRIPTION(S) PER TASK AREA – Enter the type of lamp and fixture used for portable task lighting to illuminate each task area and include a detailed lighting design demonstrating how the lighting design meets the illumination needs throughout the space. Note that supporting documents include output forms from lighting software and drawings that clearly show the location, brand, model, and performance characteristics of all luminaires in the space. In addition, all~~

~~properties of the space that effect lighting performance (like surface reflectance and furniture layout) must be clearly summarized on documentation attached to Form LTG-1-C Part 3 of 3. The information needs to be traceable to specific types of portable lighting products that will be installed.~~

~~3.LUMINAIRE(S) WATTS PER TASK AREA – Enter the total number of watts for all portable lighting used to illuminate each task area.~~

~~4.TASK AREA (ft^2) is the surface area in the space that will be served by the portable light. This may not be the same as the actual partition-to-partition area of the cubicle. It may be limited to the actual area served by the task lighting, or be limited to the desk area in the cubicle. There may be more than one task area in each ROOM # OR ZONE ID identified in COLUMN A. Each task area must be identified on the plans in a fashion that can be matched to the list of portable lighting.~~

~~5.NUMBER OF TASK AREAS – Enter the number of task areas in column D for each room or zone identified in COLUMN A.~~

~~6.TOTAL AREA (ft^2) [D x E] – Enter the results of COLUMN D multiplied times COLUMN E.~~

~~7.TOTAL WATTS (C x E) – Enter the results of COLUMN C multiplied times COLUMN E.~~

~~8.COLUMN TOTALS – Sum up the values in each of COLUMNS F and G and enter the result in the boxes at the bottom of Table 2.~~

~~9.ROOM # OR ZONE ID – Enter the name of the room number or zone ID for space(s) for which no portable lighting is required (as established by supporting documents and drawings). Note that supporting documents include output forms from lighting software and drawings that clearly show the location, brand, model, and performance characteristics of all luminaires in the space. In addition, all properties of the space that effect lighting performance (like surface reflectance and furniture layout) must be clearly summarized on documentation attached to Form LTG-3-C.~~

~~10.TOTAL AREA (ft^2) – Enter the areas of the spaces listed in A.~~

~~Building Summary – Portable Lighting~~

- ~~TOTAL AREA (ft2) – Enter the sum of the total areas from Tables 1, 2, and 3.~~
- ~~TOTAL WATTS - Enter the total watts of portable lighting from Tables 1 and 2. This number is entered on forms LTG-1-C under portable lighting.~~

DRAFT

~~5.12.5 LTG-4-C: Lighting Controls Credit Worksheet~~

~~1.LTG-4-C, Part 1 of 2, is used to report the control credits for conditioned spaces. When certain types of automatic lighting controls listed in Table 146-A in the Standards are used, a credit is permitted. This table also lists some restrictions that must be met in order to take credit for the controls.~~

- ~~Lighting control credits are documented on form LTG-4-C. This requires a specific listing of each device that is used for credit and listing those luminaires controlled by that device.~~

- ~~ROOM – List the room where the control device is controlling luminaires.~~
- ~~DESCRIPTION – List a description of that device.~~
- ~~PLANS – Indicate where on the plan set the controls are shown.~~
- ~~ROOM AREA – Indicate the area of the room in which the controls are located.~~
- ~~WWR – Indicate the window wall ratio for determining the daylighting control credit and described in the section on Effective Aperture. The window wall ratio for the window in the room should be used for vertical daylighting configurations.~~
- ~~VLT – Indicate the visible light transmittance of the aperture. The visible light transmittance is discussed in the section on Visible Light Transmittance (VLT).~~

~~1.SKYLIGHT EFFECT APERTURE – Show the skylight effective aperture – as computed from Standards Equation 146-A (§146 in the Standards) for horizontal daylighting configurations.~~

~~1.WATTS OF CONTROL LIGHTING – The total watts of controlled lighting in each room.~~

~~1.ADJUSTMENT FACTOR – Indicate the power adjustment factor for that specific control device from Table 146-A in the Standards.~~

~~1.CONTROL CREDIT – The product of COLUMN G (Watts of Control Lighting) and COLUMN H (Lighting Adjustment Factor).~~

~~1.The total control credit watts (entered on LTG-4-C) is the sum of the control credit watts in COLUMN J. This credit is subtracted from the total installed watts to determine the actual lighting power (adjusted).~~

~~1.LTG-4-C, Part 2 of 2, is used to report the control credits for unconditioned spaces. The instructions for filling LTG-4-C, Part 2 of 2 are similar to LTG-4-C; Part 1 of 2 described above, except this form is to be used for unconditioned spaces.~~

~~5.12.6 LTG-5-C5: Indoor Lighting Power Allowance~~

~~Allowed Lighting Power~~

~~The lighting power allowance is determined by calculating the maximum total watts of lighting that may be installed. There are four different methods that may be used. These methods may not be mixed in the same building permit application.~~

~~Complete Building Method~~

~~This method may only be used when plans and specifications for the entire building are included in the permit application.~~

~~Area Category Method~~

~~This method may be used when different primary function areas of a building are included in the permit application.~~

~~1.AREA CATEGORY is taken from Table 146-C in the Standards for the primary function of the area. If the building has a mixture of areas, each function area must be listed separately.~~

~~2.WATTS PER SF for that building type is taken from Standards Table 146-C and entered here.~~

~~3.AREA (SF) is the floor area of the primary function area, which is calculated by multiplying the width times the depth, as measured from the center of the interior bounding partitions. If the function area is bounded by exterior walls on one or more sides, the area is calculated by multiplying the width times the depth, as measured from the inside surface of the exterior walls to the center of the interior bounding partitions. If there are no partitions separating the boundary of the function areas on one or more sides, the boundary of the area is determined by a line separating the function areas where no bounding partitions exist.~~

~~4.ALLOWED WATTS is the product of the watts per square foot times the primary function area. This becomes the lighting power allowance for the area.~~

~~The sum of the lighting power allowance for each primary function area is the lighting power allowance for the building.~~

~~***Tailored Method***~~

~~When the tailored method is used, the LTG-6-C form, or a similar form, must be included in the compliance submittal.~~

~~*Unconditioned Spaces*~~

~~This method may be used when different unconditioned areas complete building method type of uses and the area category method primary function areas of a building are included in the permit application.~~

~~1.AREA CATEGORY is taken from Table 146-C in the Standards for the primary function of the area. If the building has a mixture of areas, each function area must be listed separately.~~

~~2.WATTS PER SF for that building type is taken from Standards Table 146-C and entered here.~~

~~3.AREA (SF) is the floor area of the primary function area measured from the inside of bounding partitions (see the section B. Area Category Method).~~

~~4.ALLOWED WATTS is the product of the watts per square foot times the primary function area. This becomes the Lighting Power Allowance for the area.~~

~~The sum of the Lighting Power Allowance for each primary function area is the Lighting Power Allowance for the building.~~

~~***Tailored Method - Unconditioned Spaces***~~

~~When the Tailored Method is used for unconditioned areas of the building, the LTG-6-C form, or a similar form, must be included in the compliance submittal.~~

DRAFT

~~5.12.7 LTG-6-C: Tailored Method Worksheet~~

~~The tailored method is the most detailed method of calculation for the lighting power allowance. The lighting power allowance is determined based on the individual needs of each task. This method is appropriate for buildings that have unusual lighting needs and in some cases, may increase the lighting power~~

~~allowance to meet those needs. For a complete description of this method, refer to Section 5.2.2.~~
~~If there are both conditioned and unconditioned spaces in a building and the tailored method is used to determine the allowed lighting power for both types of spaces, separate tailored method worksheets (LTG-6-C) must be filled out, one for conditioned spaces and one for unconditioned spaces. Each form must clearly indicate if it is used for conditioned or unconditioned spaces. Note that unconditioned spaces are all those areas that are not directly or indirectly conditioned. The conditioned and unconditioned allowances must be kept separated because when the performance method is used to show compliance for the entire building, the tailored LPD lighting for only the conditioned space must be entered for both the standards and proposed buildings. Inclusion of the unconditioned LPD would result in erroneous HVAC load calculations.~~

~~***LTG-6-C: Part 1 of 3***~~
~~This form should be submitted with all tailored method applications. It summarizes the results of the different parts of LTG-6-C, and includes the lighting power allowance calculations for illuminance categories A through G.~~

~~*Tailored Method Summary*~~

1. ~~The ALLOWED WATTS is the summation for the building, included at the top of Part 1 of form LTG-6-C.~~
2. ~~LINE 1 is the BUILDING TOTAL ALLOWED WATTS for illuminance categories A through G. This value is obtained from the bottom right corner of this form.~~
3. ~~LINE 2 is the BUILDING TOTAL ALLOWED WATTS for display and ornamental/special effects lighting. This value is obtained from the total watts entries on LTG-6-C, Part 2, and Part 3. Each allotment is separately calculated and entered into the appropriate box on this form.~~
4. ~~LINE 3 is the sum of lines 1, 2, and 3. The TOTAL ALLOWED WATTS is the lighting power allowance using the tailored method.~~

~~*Tailored LPD- Illuminance*~~
~~To complete the lower portion of Part 1 of this form, complete the following steps.~~

5. ~~COLUMN A - lists the room number of space designation and should correspond with the plans.~~
6. ~~COLUMN B - lists the task or activity that will occur in the room or space. If a space also contains a non-task area, this area should be entered on a separate line from the task area.~~
7. ~~COLUMN C - lists the illuminance category for the room or space. This is determined by using the IES Handbook, Ninth Edition, 2000.~~
8. ~~COLUMN D - lists the room cavity ratio (RCR) of each room or space. A RCR of less than 3.5 may be assumed for any room. *Error! Reference source not found.* includes the RCR of simple spaces. The LTG-7-C form may be used to calculate an RCR greater than or equal to 3.5.~~
9. ~~COLUMN E - lists the actual floor area of the room or space from the plans. The area is determined by measuring from the inside of the partitions that bound the task area.~~

10. ~~COLUMN F - lists the lighting Power allowance density from Table 146-F in the Standards using the illuminance category (COLUMN C) and room cavity ratio (COLUMN D) for each room.~~
11. ~~COLUMN G - is the product of the floor area times lighting power allowance density. The total for all rooms or spaces that contain task activities that fall within illuminance categories A through G is entered in line 1 at the top of LTG-6-C, Part 1.~~

~~LTG-6-C: Part 2 of 3~~

~~Display Lighting: Walls~~

~~When public areas include feature display lighting, it must be documented according to the display lighting procedure. To complete Part 2 of LTG-6-C, complete the following steps.~~

1. ~~COLUMN A - lists the name of the task.~~
2. ~~COLUMN B - lists the mounting height for display luminaires. Section 5.2.2.1 contains a discussion on how to determine the mounting height.~~
3. ~~COLUMN C - lists the mounting height adjustment factor for display luminaires. Select the proper factor from Standards Table 146-E and show in this column.~~
4. ~~COLUMN D - lists the wall length of the display from the plans. This length must be totaled at the bottom of the column.~~
5. ~~COLUMN E lists the lighting power allowance from Standards Table 146-D for wall display luminaires.~~
6. ~~COLUMN F - is the product of the mounting height adjustment factor (COLUMN C) times the lighted display wall length (COLUMN D) times lighting power allowance density (COLUMN E).~~
7. ~~COLUMN G - lists the luminaire name (consistent with LTG-1-C and LTG-2-C) that is illuminating the display. If more than one luminaire type is used to illuminate the display, each type must be listed separately. Multiple lines on this form may be used for this list.~~
8. ~~COLUMN H - lists the quantity of luminaires used to illuminate the display. If track lighting is used, and the plans do not indicate the number of fixtures to be used on the track, the actual length of track is entered in this column.~~
9. ~~COLUMN I - lists the total wattage of each luminaire type (including ballasts for fluorescent or high intensity discharge fixtures). For track and incandescent medium base socket fixtures, see Section ??? for how to determine the watts of these types of luminaires. If track lighting is used and the fixtures are not shown on the plans, enter 45 watts per foot of track in this column.~~
10. ~~COLUMN J - is the product of the quantity of luminaires (COLUMN H) times the watts per luminaire (COLUMN I). If more than one luminaire type is used to illuminate the task or activity, the subtotal for all the luminaires illuminating the task should be indicated in this column on a separate line of the form.~~
11. ~~COLUMN K - is the lesser of either the allotted watts (COLUMN F) or the design watts (COLUMN J).~~
12. ~~The sum of the allowed watts in COLUMN K is entered on Line 2, Part 1 of LTG-6-C.~~

~~*Display Lighting - Floors*~~

~~When retail spaces include sales floor display lighting, the lighting must be documented according to the display lighting procedure established in the section above on ***????.***.~~

~~Complete the upper portion of Part 3 of this LTG-6-C, using the following steps.~~

1. ~~COLUMN A - lists the name of the sales floor display. See the section above on *Error! Reference source not found.* for more information on the definition of Sales Floor Display Lighting.~~
2. ~~COLUMN B - lists the mounting height of the display luminaires. Section 5.1.2.2 contains a discussion on how to determine the mounting height of floor display luminaires.~~
3. ~~COLUMN C - lists the mounting height adjustment factor for floor display luminaires, found in Table146-D in the Standards.~~
4. ~~COLUMN D - lists the area of each space with floor displays from the plans. This area must be totaled at the bottom of the column.~~
5. ~~COLUMN E - lists the Lighting Power Allowance density from Standards Table 146-D using the mounting height adjustment factors (COLUMNS C and D) for display luminaires. This allowance will always be based on illuminance category G.~~
6. ~~COLUMN F - is the product of the mounting height adjustment factor (COLUMN C), the task area (COLUMN D) and the lighting power density (COLUMN E).~~
7. ~~COLUMN G - lists the luminaire name (consistent with LTG-1-C and LTG-2-C) that is illuminating the display. If more than one luminaire type is used to illuminate the display, each type must be separately listed. Multiple lines on this form may be used for this list.~~
8. ~~COLUMN H - lists the quantity of luminaires used to illuminate the display. If track lighting is used, and the plans do not indicate the number of fixtures to be used on the track, the actual length of the track is entered in this column.~~
9. ~~COLUMN I - lists the total wattage of each luminaire type (including ballasts for fluorescent or high intensity discharge fixtures). For track and incandescent medium base socket fixtures, see the section above on **Error! Reference source not found.** for how to determine the watts of these types of luminaires. If track lighting is used, and the fixtures are not shown on the plans, enter 45 watts per foot of track in this column.~~
10. ~~COLUMN J - is the product of the quantity of luminaires (COLUMN H) times the watts per luminaire (COLUMN I). If more than one luminaire type is used to illuminate the task or activity, the subtotal for all the luminaires illuminating the task should be indicated in this column on a separate line of the form.~~
11. ~~COLUMN K - is the lesser of either the allotted watts (COLUMN F) or the design watts (COLUMN J).~~
12. ~~The sum of the allowed watts for floor display lighting in COLUMN K is entered on Line 2, Part 1 of LTG-6-C.~~

~~***LTG-6-C: Part 3 of 3***~~

~~Ornamental and Special Effects Lighting includes chandeliers, sconces, lanterns, neon and cold cathode, light emitting diodes (LEDs), theatrical projectors, moving lights and light color panels (used decoratively, not as display~~

~~lighting). If allowed in Standards Table 146-D column 5, use this form to compute the power allowance.~~

1. ~~COLUMN A - lists the name of the luminaire or lighting type.~~
2. ~~COLUMN B - lists area of the space that contains the chandelier or special effects lighting.~~
3. ~~COLUMN C - lists the lighting power allowance density from COLUMN 5 of Standards Table 146-D.~~
4. ~~COLUMN D - is the product of the area (COLUMN B) and the lighting power density (COLUMN C).~~
5. ~~COLUMN E - lists the luminaire name (consistent with LTG-1-C and LTG-2-C). Multiple lines on this form may be used to list multiple luminaires.~~
6. ~~COLUMN F - lists the quantity of luminaires used for ornamental or special effects lighting. If track lighting is used, and the plans do not indicate the number of fixtures to be used on the track, the actual length of track is entered in this column.~~
7. ~~COLUMN G - lists the total wattage of each luminaire type (including ballasts for fluorescent or high intensity discharge fixtures). For track, and incandescent medium base socket fixtures, see the section above on ?????. for how to determine the watts of these types of luminaires. If track lighting is used, and the fixtures are not shown on the plans, enter 45 Watts per foot of track in this column.~~
8. ~~COLUMN H - is the product of the quantity of luminaires (COLUMN F) times the watts per luminaire (COLUMN G). If more than one luminaire type is used to illuminate the task or activity, the subtotal for all the luminaires illuminating the task should be indicated in this column on a separate line of the form.~~
9. ~~COLUMN I - is the lesser of either the allotted watts (COLUMN D) or the design watts (COLUMN H).~~

~~The sum of the allowed watts for ornamental/special effects lighting in COLUMN I is entered on Line 2, Part 1 of LTG-6-C.~~

~~*Very Valuable Merchandise Display Cases that contain jewelry and other valuable merchandise are Lighting Power Allowance for each square foot of lighted display case counter top, as shown in Table 146-D in the Standards. These displays may include jewelry, coins, fine china or crystal, precious stones, silver or other precious metal, small art objects and artifacts, or other valuable collections that require inspection of fine detail from outside a locked case.*~~

1. ~~COLUMN A - lists the name of the luminaire or location.~~
2. ~~COLUMN B - lists area of the space.~~
3. ~~COLUMN C - lists the Lighting Power Allowance density from Column 5 of Standards Table 146-D.~~
4. ~~COLUMN D - is the product of the area (COLUMN B) and the lighting power density (COLUMN C).~~
5. ~~COLUMN E - lists area of the display case.~~
6. ~~COLUMN F - is already listed and is 20 watts per square foot.~~
7. ~~COLUMN G - is the product of the area (COLUMN E) and the lighting power density (COLUMN F = 20 watts per square foot).~~
8. ~~COLUMN H - lists the luminaire code (consistent with LTG-1-C and LTG-2-C). Multiple lines on this form may be used to list multiple luminaires.~~

9. ~~COLUMN I - lists the quantity of luminaires used for very valuable display lighting. If track lighting is used, and the plans do not indicate the number of fixtures to be used on the track, the actual length of track is entered in this column.~~
10. ~~COLUMN J - lists the total wattage of each luminaire type (including ballasts for fluorescent or high intensity discharge fixtures). For track and incandescent medium base socket fixtures, see the section on ???. for how to determine the watts of these types of luminaires. If track lighting is used, and the fixtures are not shown on the plans, 45 watts per foot of track is entered in this column.~~
11. ~~COLUMN K - is the product of the quantity of luminaires (COLUMN I) times the watts per luminaire (COLUMN J). If more than one luminaire type is used to illuminate the task or activity, the subtotal for all the luminaires illuminating the task should be indicated in this column on a separate line of the form.~~
12. ~~COLUMN L - is the lesser of either the allotted watts for the space area (COLUMN D), the allotted watts for the very valuable display area (Column G), or the design watts (COLUMN K).~~

~~The sum of the allowed watts for ornamental/special effects lighting in COLUMN L is entered on Line 2, Part 1 of LTG-6-C.~~

~~As with all applications in illuminance category G, the allowed lighting watts for feature displays may not exceed the actual installed wattage. This prevents unused display lighting allotments from being used in other areas of the store.~~

~~5.12.8 LTG-7-C: Room Cavity Ratio Worksheet (>3.5)~~

~~Form LTG-7-C is an optional form to be used only in conjunction with the Tailored Method and form LTG-6-C. LTG-7-C documents the calculation of room cavity ratios (RCRs) that are greater than or equal to 3.5 for spaces in illuminance categories A-G.~~

~~Rooms in a building which are relatively large generally have a high RCR. If the RCR is greater than or equal to 3.5, a higher LPD is allowed. If the RCR is less than 3.5, it does not need to be included on this form.~~

~~The form has two sections: **Rectangular Spaces** is for rooms with four 90° walls, and **Non-rectangular Spaces** is for all other room types (including oblique four walled and circular rooms).~~

~~Rectangular Spaces~~

1. ~~COLUMN A - lists each room's number, and should correspond to the plans.~~
2. ~~COLUMN B - lists the task/activity description for the room. If the room has multiple tasks or activities, use the dominant activity for the room in this column.~~
3. ~~COLUMN C - lists the length (L) of the room, measured in feet, from the interior surfaces of opposing walls. The length is typically the longest distance between two parallel walls in the room.~~
4. ~~COLUMN D - lists the width (W) of the room, measured in feet, from the interior surfaces of opposing walls. The width is typically the smallest distance between two parallel walls in the room.~~

5. ~~COLUMN E - lists the vertical distance, measured in feet, from the work plane to the center line of the lighting fixture. This measurement is called the room cavity height (H).~~
6. ~~COLUMN F - is 5 times the product of the room cavity height H (from COLUMN E) and the sum of the room length and width (L from COLUMN C plus W from COLUMN D), all divided by the room area L (from COLUMN C) times room width (W from COLUMN D). This quantity is the RCR and should be entered in COLUMN D of Part 1 of LTG-6-C for tasks with illuminance categories A-G.~~

~~***Non-rectangular Spaces***~~

1. ~~COLUMN A - lists each room's number, and should correspond with the plans.~~

8. ~~COLUMN B - lists the area or activity description for the room. If the room has multiple tasks or activities, use the dominant activity for the room in this column.~~
9. ~~COLUMN C - lists the interior area (A) of the room in square feet. This should be determined by whatever means appropriate for the shape of the room.~~
10. ~~COLUMN D - lists the room perimeter (P) measured in feet along the interior surfaces of the walls that define the boundaries of the room. For rooms with angled walls, this is the sum of the interior lengths of each wall in the room. For circular rooms, this is the interior radius of the room, squared, times pi (3.413).~~
11. ~~COLUMN E - lists the vertical distance, measured in feet, from the work plane to the center line of the lighting fixture. This measurement is called the room cavity height (H).~~
12. ~~COLUMN F - is 2.5 times the product of the room cavity height H (from COLUMN E) and room perimeter P (from COLUMN D), all divided by the room area A (from COLUMN C). This quantity is the RCR and should be entered in COLUMN D of Part 1 of LTG-6-C for tasks with illuminance categories A-G.~~

~~5.12.9 LTG-8-C: Common Lighting Systems Method Worksheet~~

~~Complete and submit form LTG-8-C (Common Lighting Systems) only if selecting the Common Lighting Systems method of allowed lighting power to determine if an indoor lighting system complies with the prescriptive requirements (§146 in the Standards). This method is only for building types shown in Standards Table 146-B, Complete Building Method Lighting Power Density Values. In addition, the lighting power density listed in Standards Table 146-B for that building type must be at least 1.0 w/ft^2.~~

1. ~~SPACE NAME -- Insert the name or number of the space. Use a new row for each space in the building area.~~

1. ~~SPACE AREA -- Insert the area (square feet) of the space.~~

1. ~~LUMINAIRE TYPE OR CODE -- Insert the luminaire type, or the luminaire code shown in the luminaire schedule on the plans.~~

~~1.LUMINAIRE POWER -- Insert the power used by each luminaire of the type shown on this line, in watts. This is the total power including the ballast or transformer (or lamp, if no ballast or transformer is required to operate that lamp) when operating the lamp.~~

~~1.Energy Commission DEFAULT -- Check the "Y" box if the luminaire power in the previous column is from Appendix NB in the Nonresidential ACM Manual, or check the "N" box if the power shown is from the ballast manufacturer's literature. Include a copy of the ballast manufacturer's specification sheet if that is the source for the luminaire power shown in the previous column.~~

~~1.LUMINAIRE SPACING OR LAYOUT -- Indicate the distance between luminaire centers in rows and columns, similar to the method used in column 3 of the Standards Table for common lighting systems.~~

~~5.12.10 LTG-9-C: Line Voltage Track Lighting Worksheet~~

~~LTG-9-C should be used to identify and account for all line voltage track lighting. (Line voltage track typically operates around 120 volts or greater). Completing this form and entering the results on LTG-2-C calculate the installed lighting power for line voltage track lighting.~~

~~To determine luminaire wattage incorporated into the installed lighting power for line voltage track lighting, use one of the two Methods described in 5.4.3 of the Nonresidential Manual.~~

~~Method 1 - Volt-Ampere (VA) Rating of the Branch Circuit(s) Feeding the Tracks or the Wattage of Integral Current Limiters~~

~~1.COLUMN A - list the name or number that identifies the branch circuit feeding the track. This column must be filled for all branch circuits feeding track lighting systems.~~

~~2.COLUMN B - list the volt-ampere rating of the branch circuit identified in column A. Fill out this column only when you are using the VA of the branch circuit to determine the wattage of the track(s). If integral current limiters are used to determine the wattage of the tracks, leave this column blank.~~

~~3.COLUMN C - Check the boxes to indicate if integral current limiters are used. Columns (C) thru (G) must only be filled out if the current limiter option is used to determine the wattages of all or some of the tracks connected to the branch circuit. These columns may be left blank if the branch circuit option is used to determine the wattage of the track(s)~~

~~4.COLUMN D – If the box(es) in column (C) is checked, list the wattage of the current limiter.~~

~~5.COLUMN E – List the length of the track.~~

~~6.COLUMN F – If the track is equipped with an integral current limiter, multiply the value in column (E) by 15 watts per linear foot. If the track is not equipped with an integral current limiter, multiply the value in column (E) by 45 watts per linear foot.~~

~~7.COLUMN G – List the wattage of the track, which is the higher of columns (D) or (F)~~

~~8.SUB-TOTALS – Sub-totals are the sum of all track watts listed in column (G). If the branch circuit option is used to determine the wattage of the track(s), sub-total is the value listed in column (B).~~

~~9.TOTAL WATTS – Total watts are the sum of all sub-totals.~~

~~***Method 2 - Use The Higher Of:***~~

~~***45 watts per linear foot of track, or the maximum relamping rated wattage of all luminaires.***~~

~~1.COLUMN A - list the name or number that identifies the track lighting.~~
~~2.COLUMN B - list the linear feet of track lighting identified in column A~~
~~3.COLUMN C - is 45 watts per linear feet. This number is required for using Method 2.~~
~~4.COLUMN D - Multiply the number in column B by the number in column C.~~
~~5.COLUMN E - Determine the rated wattage of each luminaire (track head) that will be installed on the line voltage track identified in column A according to~~
~~§130 (c) of the Standards. Luminaire wattage for incandescent track heads shall be the maximum relamping rated wattage as listed on a permanent factory-installed label according to §130 (c) 1. Luminaire wattage for fluorescent and high intensity discharge (HID) track heads shall be the operating input wattage of the rated lamp/ballast combination according to §130 (c) 2. Luminaire wattage for low-voltage track heads (when mounted on line-voltage track) shall be the maximum rated wattage of the transformer on each track head according to §130 (c) 5. Add up the wattage for every luminaire that will be installed on the identified track and enter the total amount as the rated wattage.~~
~~6.COLUMN F - list the larger number from column D or column E. This is the installed lighting power for the track listed in column A. Add up all of the numbers in column F and list the total at the bottom. Enter this number in LTG-2-C for the installed lighting power of the track lighting systems determined by this method.~~

~~5.12.11 OLTG-4-C: Indoor Signs Worksheet~~

~~Complete and submit OLTG-4-C to show compliance for all indoor and outdoor signs. Refer to OLTG-4-C Worksheet and Plan Check Documents instructions in this manual's Chapter 6, the Outdoor Lighting and Signs Chapter. For indoor and outdoor Signs, either LTG-1-C or OLTG-1-C Certificate of Compliance may be used in conjunction with OLTG-4-C.~~

- *LTG-1C: Certificate of Compliance*:
  This form is required for every job, and it is required to appear on the plans.
- *LTG-2C: Interior Lighting Schedule:*
  This form is required for all submittals.
- *LTG-3C: Lighting Controls Credit Worksheet:*
  This form should only be required when calculating control credit watts. See Standards Table 146-C for lighting control credits.
- *LTG-4C: Interior Lighting Power Allowance Worksheet:*
  This form is required when calculating the Lighting Power Allowance

using the Complete Building, Area Category, or Tailored Method for compliance.

- *LTG-5C: Tailored Method Worksheet:*
  This form should only be required when calculating the Lighting Power Allowance using the Tailored Method.
- *LTG-6C: Room Cavity Ratio Worksheet:*
  This form should only be required when using the Tailored Method. The Room Cavity Ratio is required in the Tailored Method Worksheet.
- *LTG-7C: LINE VOLTAGE TRACK LIGHTING WORKSHEET:*
  This form is only used when line voltage track lighting is used.

5.7.2 LTG-1C: Certificate of Compliance

The LTG-1C Certificate of Compliance form is in three parts. Each part; if required below must appear on the plans (usually near the front of the electrical drawings). A copy of these forms should also be submitted to the building department along with the rest of the compliance submittal at the time of building permit application. With building department approval, the applicant may use alternative formats of these forms (rather than the official Energy Commission forms), provided the information is the same and in a similar format.

LTG-1C Part 1 of 3 Field Inspection Energy Checklist

Project Description

1. PROJECT NAME is the title of the project, as shown on the plans and known to the building department.
2. BUILDING TYPE is specified because there are special requirements for high-rise residential and hotel/motel guest room occupancies. All other occupancies that fall under the Nonresidential Standards are designated "Nonresidential" here. It is possible for a building to include more than one building type. See §149 in the Standards for the formal definitions of these occupancies. All appropriate boxes shall be checked as appropriate:
   - Nonresidential if the project includes nonresidential indoor lighting;
   - Addition Alone if the project is only an addition;
   - High Rise Residential if the project is a high rise residential project
   - Existing + Addition/Alteration if the project consists of an existing plus an addition, an existing plus an alteration, or an existing plus and addition plus and alteration.
   - Hotel/Motel Guest Room if the project is a motel or hotel guest rooms. If this box is checked, the residential lighting CF6R-LTG must also be completed and submitted
   - Relocateble if the project is a relocateable classroom
3. DATE is the date of preparation of the compliance submittal package. It should be on or after the date of the plans, and on or before the date of the building permit application.
4. PROJECT ADDRESS is the address of the project as shown on the plans and as known to the building department.
5. CLIMATE ZONE of the building. Refer to Joint Appendix I. 2

6. TOTAL CONDITIONED FLOOR AREA has specific meaning under the Standards. Refer to Joint Appendix I for a discussion of this definition.
7. ADDITIONAL FLOOR AREA is the new floor area added to the building.
8. FIELD INSPECTION ENERGY CHECKLIST is for the field inspector to use to verify that all luminaires and controls have been installed.
   - Luminaire Description is a description of the rated type of luminaire in accordance with §130(d)
   - # Lamps is the total number of lamps in the luminaire
   - Lighting Control is the type of lighting control(s) used to control the luminaire
   - Mandatory Controls are those controls required according to §131.
   - Description is a descrption of the lighting control as listed in §119 or §131
   - Location is the room or area in which the control is located.

LTG-1C Part 2 of 3 Certificate of Compliance

Project Description

1. PROJECT NAME is the title of the project, as shown on the plans and known to the building department.
2. DATE is the date of preparation of the compliance submittal package. It should be on or after the date of the plans, and on or before the date of the building permit application.
3. PROJECT ADDRESS is the address of the project as shown on the plans and as known to the building department.
4. CLIMATE ZONE of the building. Refer to Joint Appendix I. 2
5. TOTAL CONDITIONED FLOOR AREA has specific meaning under the Standards. Refer to Joint Appendix I for a discussion of this definition.

General Information

6. BUILDING TYPE is specified because there are special requirements for high-rise residential and hotel/motel guest room occupancies. All other occupancies that fall under the Nonresidential Standards are designated "Nonresidential" here. It is possible for a building to include more than one building type. See §149 in the Standards for the formal definitions of these occupancies. All appropriate boxes shall be checked as appropriate:
   - Nonresidential if the project includes nonresidential indoor lighting;
   - High Rise Residential if the project is a high rise residential project
   - Hotel/Motel Guest Room if the project is a motel or hotel guest rooms. If this box is checked, the residential lighting CF6R-LTG must also be completed and submitted
   - Relocateble if the project is a relocateable classroom
   - Conditioned Space is a space that is directly or indirectly air-conditioned. Check this box if the building includes conditioned spaces where lighting systems are being installed. Tradeoffs are not allowed between conditioned and unconditioned spaces.

- Unconditioned Space is a space that is not directly or indirectly air-conditioned. Check this box if the building includes unconditioned spaces where lighting systems are being installed. Tradeoffs are not allowed between conditioned and unconditioned spaces.

9. PHASE OF CONSTRUCTION indicates the status of the building project described in the documents. Refer to Joint Appendix I for detailed definitions.
   - NEW CONSTRUCTION should be checked for all new buildings, newly conditioned space (see §149 in the Standards) or for new construction in existing buildings (tenant improvements, see Section **Error! Reference source not found.**~~????.~~) that are submitted for envelope compliance.
   - ADDITION should be checked for an addition which is not treated as a stand-alone building, but which uses Option 2 described in §149 in the Standards.
   - ALTERATION should be checked for alterations to existing building lighting systems. See Section ???.

Statement of Compliance

10. DOCUMENTATION AUTHOR is the person who prepared the energy compliance documentation. This may or may not be the principal designer (it may be a person specializing in energy standards compliance work). This person is not subject to the Business and Profession's Code. The person's telephone number is given to facilitate response to any questions that arise.
11. PRINCIPAL DESIGNER - LIGHTING is the person responsible for the preparation of the lighting plans, one of two people who sign the STATEMENT OF COMPLIANCE (see below). The person's telephone number is given to facilitate response to any questions that arise.

Gary Flamm Stopped Here. The remaining text is old text that still needs to be evaluated line-by-line to be consistent with the revised 2009 forms.

Lighting Mandatory Measures

This portion requests the location of notes clarifying the inclusion of the mandatory requirements. Notes should be included on the plans to demonstrate compliance with mandatory requirements of the Standards.

Following are prototype examples of the notes that should be rewritten to actual conditions. A note for each of the items listed should be included, even if the note states "not applicable".

Building Lighting Shut-off

The building lighting shut-off system consists of an automatic time switch, with a zone for each floor.

Override for Building Lighting Shut-off

The automatic building shut-off system is provided with a manual accessible override switch in sight of the lights. The area of override is not to exceed 5,000 square feet.

Automatic Control Devices Certified

All automatic control devices specified are certified; all alternate equipment shall be certified and installed as directed by the manufacturer.

Fluorescent Ballast and Luminaires Certified

All fluorescent fixtures subject to certification and specified for the projects are certified.

Individual Room/Area Controls

Each room and area in this building is equipped with a separate switch or occupancy sensor device for each area with floor-to-ceiling walls.

Uniform Reduction for Individual Rooms

All rooms and areas greater than 100 square feet and more than 0.8 watts per square foot of lighting load shall be controlled with Multi-level switching for uniform reduction of lighting within the room.

Daylit Area Control

All rooms that are greater than 250 square feet and contain windows and skylights, that allow for the effective use of daylight in the area shall have 50% of the lighting power in each daylit area controlled by a separate switch; or

The effective use of daylight throughout cannot be accomplished because the windows are continuously shaded by a building on the adjacent lot. Diagram of shading during different times of year is included on plans.

The above notes are only examples of wording. Each mandatory measure that requires a separate note should be listed on the plans.

To verify certification, use one of the following options:

The Energy Hotline (1-800-772-3300) can verify certification of appliances not found in the above directories.

- The Energy Commission's Web Site includes listings of energy efficient appliances for several appliance types. The web site address is http://www.energy.ca.gov/efficiency/appliances/.
- The complete appliance databases can be downloaded from the California Energy Commission's Internet

  (http://www.energy.ca.gov/appliances/appliance/excel_based_files/). This requires database software (spreadsheet programs cannot handle some of the larger files). To use the data, a user must download the database file (or files), download a brand file and a manufacturer file and then decompress these files. The data can be sorted and manipulated.

Documenting the mandatory measures on the plans is accomplished through a confirmation statement, notes and actual equipment location as identified on the plans. The plans should clearly indicate the location and type of all mandatory control devices; such as manual switches, reduced level control, daylit area, controls, building shut-off and overrides, and exterior light controls.

Lighting Worksheet
Check the appropriate boxes to indicate which worksheet(s) are being included with the certificate of compliance.

LTG-1C Part 2 of 4
Part 2 of LTG-1-C is used to indicate compliance by showing that the installed indoor lighting power is lower than the lighting power allowance.

Installed Indoor Lighting Power for Conditioned and Unconditioned Spaces:

- Indicate the installed lighting for conditioned spaces from form LTG-2-C
- Indicate installed lighting power from LTG-2-C, portable lighting from LTG-2-C, and any lighting controls credits from LTG-4-C. Sum to determine total installed lighting power.
- Indicate lighting control credit for conditioned spaces form LTG-4-C
- Indicate the conditioned space adjusted installed lighting power
- Indicate the installed lighting for unconditioned spaces from LTG-2-C
- Indicate lighting control credit for unconditioned spaces from LTG-4-C
- Indicate the unconditioned space adjusted installed lighting power

Allowed Indoor Lighting Power

- Indicate which method of compliance is being used and indicate the total allowance from the corresponding worksheet.

Alternate Compliance

- Check the appropriate box if the performance or area category method is being used for compliance.

- Indicate the allowed indoor lighting power for unconditioned spaces from LTG-5-C

Mandatory Lighting Measures for Indoor Lighting and Daylit Areas
The Mandatory Automatic Controls portion is where those devices that meet the mandatory control requirements are listed, that would include devices for building shut-off, individual room control and control of exterior lights.

1. CONTROL LOCATION lists the location(s), room number(s), area number(s), or description of the controls and should match the plans.
2. CONTROL IDENTIFICATION lists the symbol of the control and should match the plans.
3. CONTROL TYPE lists the type of certified control device used to meet the mandatory automatic control requirement, such as automatic time switch, dimming, photosensor, etc.
4. SPACE CONTROLLED lists the location of controlled lights.

Check the box(s) if the controls are used for daylighting.

Notes to Field -This space is for use by the building department plans examiner to alert the field inspector to look for important inspection items.
Typical controls may be covered by general notation.

LTG-1C Part 3 of 4

LTG-1-C, Part 3 of 4 submittal is only required if control credits are claimed.
Controls for Credit in Conditioned and Unconditioned Spaces
The Controls for Credit portion is similar to the Mandatory Automatic Controls portion. The only difference is in the last column, LUMINAIRES CONTROLLED.

1. CONTROL LOCATION lists the location(s) or room number(s) of the controls and should match the plans.
2. CONTROL IDENTIFICATION lists the symbol of the control and should match the plans.
3. CONTROL TYPE lists the type of certified control device used to meet the automatic control requirement. Such controls are, occupant, daylight, dimming sensors etc.
4. LUMINAIRES CONTROLLED should list the luminaire type and quantity controlled for credit.
5. TYPE should use the same name as on the plans.
6. # OF LUMINAIRES should indicate the number of luminaires of that type that are controlled by the control type. A general plan notation on the plans may cover all typical controls.

This space is for use by the building department plans examiner to alert the field inspector to look for important inspection items.

LTG-1C Part 4 of 4
Acceptance Requirements
The Designer is required to check the box for each type of lighting system in the building when an acceptance test is required. Below each box that is checked the Designer is required to list the equipment that must be tested and the number of systems to be tested in parentheses. The Designer should think abut who will be conducting the tests and list this person in the section titled “Test Performed By”. Those who are allowed to conduct the tests are the installing contractor, design professional or an agent selected by the owner.

Statement of Compliance
The Statement of Compliance is signed by the person responsible for preparation of the plans for the building. This person is also responsible for the energy compliance documentation, even if the actual work is delegated to someone else (the Documentation Author described above). It is necessary that the compliance documentation be consistent with the plans. The Business and Professions Code governs who is qualified to prepare plans, and therefore to sign this statement; check the appropriate box that describes the signer’s eligibility.

Applicable sections from the Business and Professions Code (based on the edition in effect as of August 2000), referenced on the Certificate of Compliance, are provided below.

5.7.3 LTG-2C: Indoor Lighting Schedule

LTG-2-C, Part 1 of 2, is used to describe the lighting fixtures and control devices designed to be installed in the building. The Installed Lighting Power for Conditioned Spaces is calculated by completing this form.

1. LUMINAIRE NAMES shall be listed by name or symbol.
2. DESCRIPTION should indicate a short list of the technical features.
3. LAMP TYPE is the type of lamps such as T-8, T-5, high output (HO), etc.
4. NUMBER OF LAMPS PER LUMINAIRE is the number of lamps per luminaire.
5. WATTS PER LAMP is watts per lamp including ballast losses and ballast factor. This is not the nominal lamp wattage published by the manufacturer.
6. NUMBER OF BALLASTS PER LUMINAIRE is the number of ballasts per each luminaire.
7. WATTS PER LUMINAIRE is the total watts per luminaire including lamps, ballasts, and all loses and ballast factors. This number is equal to WATTS PER LAMPS multiplied by NUMBER OF LAMPS PER LUMINAIRE.
8. If CEC DEFAULT is checked, this indicates the wattage is a standard value from the data in ACM Manual Appendix NB. If this column is not checked, nonstandard values must be substantiated with manufacturer's data sheets.
9. NUMBER OF LUMINAIRES is the number of similar luminaires in the space.
10. INSTALLED WATTS is total installed watts for similar luminaire installed in the space, which is the product of WATTS PER LUMINAIRE and NUMBER OF LUMINAIRES.

Subtotal the total watts for each luminaire, add portable lighting watts, if any from Ltg-3-C, and subtract the control credits, if any, from form LTG-4-C. The results are the actual lighting power (adjusted) for conditioned spaces of the building. This total cannot be greater than the lighting power allowance calculated below.

LTG-2-C, Part 2 of 2, is used to describe the lighting fixtures and control devices designed to be installed in the building. The Installed Lighting Power for Unconditioned Spaces is calculated by completing this form.

The instructions for filling LTG-2-C, Part 2 of 2 are similar to instructions LTG-2-C, Part 2 of 1 described above, except this form is to be used for unconditioned spaces.

5.7.4 LTG-3C: Lighting Controls Credit Worksheet

1. LTG-4-C, Part 1 of 2, is used to report the control credits for conditioned spaces. When certain types of automatic lighting controls listed in Table 146-A in the Standards are used, a credit is permitted. This table also lists some restrictions that must be met in order to take credit for the controls.

- Lighting control credits are documented on form LTG-4-C. This requires a specific listing of each device that is used for credit and listing those luminaires controlled by that device.
- ROOM – List the room where the control device is controlling luminaires.
- DESCRIPTION – List a description of that device.
- PLANS – Indicate where on the plan set the controls are shown.
- ROOM AREA – Indicate the area of the room in which the controls are located.
- WWR – Indicate the window wall ratio for determining the daylighting control credit and described in the section on Effective Aperture. The window wall ratio for the window in the room should be used for vertical daylighting configurations.
- VLT – Indicate the visible light transmittance of the aperture. The visible light transmittance is discussed in the section on Visible Light Transmittance (VLT).

2. SKYLIGHT EFFECT APERTURE – Show the skylight effective aperture as computed from Standards Equation 146-A (§146 in the Standards) for horizontal daylighting configurations.
3. WATTS OF CONTROL LIGHTING – The total watts of controlled lighting in each room.
4. ADJUSTMENT FACTOR – Indicate the power adjustment factor for that specific control device from Table 146-A in the Standards.
5. CONTROL CREDIT – The product of COLUMN G (Watts of Control Lighting) and COLUMN H (Lighting Adjustment Factor).
6. The total control credit watts (entered on LTG-4-C) is the sum of the control credit watts in COLUMN J. This credit is subtracted from the total installed watts to determine the actual lighting power (adjusted).
7. LTG-4-C, Part 2 of 2, is used to report the control credits for unconditioned spaces. The instructions for filling LTG-4-C, Part 2 of 2 are similar to LTG-4-C; Part 1 of 2 described above, except this form is to be used for unconditioned spaces.

5.7.5 LTG-4C: Indoor Lighting Power Allowance

Allowed Lighting Power

The lighting power allowance is determined by calculating the maximum total watts of lighting that may be installed. There are four different methods that may be used. These methods may not be mixed in the same building permit application.

Complete Building Method

This method may only be used when plans and specifications for the entire building are included in the permit application.

Area Category Method

This method may be used when different primary function areas of a building are included in the permit application.

1. AREA CATEGORY is taken from Table 146-C in the Standards for the primary function of the area. If the building has a mixture of areas, each function area must be listed separately.
2. WATTS PER SF for that building type is taken from Standards Table 146-C and entered here.
3. AREA (SF) is the floor area of the primary function area, which is calculated by multiplying the width times the depth, as measured from the center of the interior bounding partitions. If the function area is bounded by exterior walls on one or more sides, the area is calculated by multiplying the width times the depth, as measured from the inside surface of the exterior walls to the center of the interior bounding partitions. If there are no partitions separating the boundary of the function areas on one or more sides, the boundary of the area is determined by a line separating the function areas where no bounding partitions exist.
4. ALLOWED WATTS is the product of the watts per square foot times the primary function area. This becomes the lighting power allowance for the area.

The sum of the lighting power allowance for each primary function area is the lighting power allowance for the building.

Tailored Method

When the tailored method is used, the LTG-6-C form, or a similar form, must be included in the compliance submittal.

Unconditioned Spaces

This method may be used when different unconditioned areas complete building method type of uses and the area category method primary function areas of a building are included in the permit application.

1. AREA CATEGORY is taken from Table 146-C in the Standards for the primary function of the area. If the building has a mixture of areas, each function area must be listed separately.
2. WATTS PER SF for that building type is taken from Standards Table 146-C and entered here.
3. AREA (SF) is the floor area of the primary function area measured from the inside of bounding partitions (see the section B. Area Category Method).
4. ALLOWED WATTS is the product of the watts per square foot times the primary function area. This becomes the Lighting Power Allowance for the area.

The sum of the Lighting Power Allowance for each primary function area is the Lighting Power Allowance for the building.

Tailored Method - Unconditioned Spaces

When the Tailored Method is used for unconditioned areas of the building, the LTG-6-C form, or a similar form, must be included in the compliance submittal.

5.7.6 LTG-5C: Tailored Method Worksheet

The tailored method is the most detailed method of calculation for the lighting power allowance. The lighting power allowance is determined based on the

individual needs of each task. This method is appropriate for buildings that have unusual lighting needs and in some cases, may increase the lighting power allowance to meet those needs. For a complete description of this method, refer to Section 5.2.2.
If there are both conditioned and unconditioned spaces in a building and the tailored method is used to determine the allowed lighting power for both types of spaces, separate tailored method worksheets (LTG-6-C) must be filled out, one for conditioned spaces and one for unconditioned spaces. Each form must clearly indicate if it is used for conditioned or unconditioned spaces. Note that unconditioned spaces are all those areas that are not directly or indirectly conditioned. The conditioned and unconditioned allowances must be kept separated because when the performance method is used to show compliance for the entire building, the tailored LPD lighting for only the conditioned space must be entered for both the standards and proposed buildings. Inclusion of the unconditioned LPD would result in erroneous HVAC load calculations.

LTG-5C: Part 1 of 3
This form should be submitted with all tailored method applications. It summarizes the results of the different parts of LTG-6-C, and includes the lighting power allowance calculations for illuminance categories A through G.

Tailored Method Summary

1. The ALLOWED WATTS is the summation for the building, included at the top of Part 1 of form LTG-6-C.
2. LINE 1 is the BUILDING TOTAL ALLOWED WATTS for illuminance categories A through G. This value is obtained from the bottom right corner of this form.
3. LINE 2 is the BUILDING TOTAL ALLOWED WATTS for display and ornamental/special effects lighting. This value is obtained from the total watts entries on LTG-6-C, Part 2, and Part 3. Each allotment is separately calculated and entered into the appropriate box on this form.
4. LINE 3 is the sum of lines 1, 2, and 3. The TOTAL ALLOWED WATTS is the lighting power allowance using the tailored method.

Tailored LPD- Illuminance
To complete the lower portion of Part 1 of this form, complete the following steps.

5. COLUMN A - lists the room number of space designation and should correspond with the plans.
6. COLUMN B - lists the task or activity that will occur in the room or space. If a space also contains a non-task area, this area should be entered on a separate line from the task area.
7. COLUMN C - lists the illuminance category for the room or space. This is determined by using the IES Handbook, Ninth Edition, 2000.
8. COLUMN D - lists the room cavity ratio (RCR) of each room or space. A RCR of less than 3.5 may be assumed for any room. *Error! Reference source not found.* includes the RCR of simple spaces. The LTG-7-C form may be used to calculate an RCR greater than or equal to 3.5.

9. COLUMN E - lists the actual floor area of the room or space from the plans. The area is determined by measuring from the inside of the partitions that bound the task area.
10. COLUMN F - lists the lighting Power allowance density from Table 146-F in the Standards using the illuminance category (COLUMN C) and room cavity ratio (COLUMN D) for each room.
11. COLUMN G - is the product of the floor area times lighting power allowance density. The total for all rooms or spaces that contain task activities that fall within illuminance categories A through G is entered in line 1 at the top of LTG-6-C, Part 1.

LTG-5C: Part 2 of 3

Display Lighting: Walls

When public areas include feature display lighting, it must be documented according to the display lighting procedure. To complete Part 2 of LTG-6-C, complete the following steps.

1. COLUMN A - lists the name of the task.
2. COLUMN B - lists the mounting height for display luminaires. Section 5.2.2.1 contains a discussion on how to determine the mounting height.
3. COLUMN C - lists the mounting height adjustment factor for display luminaires. Select the proper factor from Standards Table 146-E and show in this column.
4. COLUMN D - lists the wall length of the display from the plans. This length must be totaled at the bottom of the column.
5. COLUMN E lists the lighting power allowance from Standards Table 146-D for wall display luminaires.
6. COLUMN F - is the product of the mounting height adjustment factor (COLUMN C) times the lighted display wall length (COLUMN D) times lighting power allowance density (COLUMN E).
7. COLUMN G - lists the luminaire name (consistent with LTG-1-C and LTG-2-C) that is illuminating the display. If more than one luminaire type is used to illuminate the display, each type must be listed separately. Multiple lines on this form may be used for this list.
8. COLUMN H - lists the quantity of luminaires used to illuminate the display. If track lighting is used, and the plans do not indicate the number of fixtures to be used on the track, the actual length of track is entered in this column.
9. COLUMN I - lists the total wattage of each luminaire type (including ballasts for fluorescent or high intensity discharge fixtures). For track and incandescent medium base socket fixtures, see Section ??? for how to determine the watts of these types of luminaires. If track lighting is used and the fixtures are not shown on the plans, enter 45 watts per foot of track in this column.
10. COLUMN J - is the product of the quantity of luminaires (COLUMN H) times the watts per luminaire (COLUMN I). If more than one luminaire type is used to illuminate the task or activity, the subtotal for all the luminaires illuminating the task should be indicated in this column on a separate line of the form.
11. COLUMN K - is the lesser of either the allotted watts (COLUMN F) or the design watts (COLUMN J).

12. The sum of the allowed watts in COLUMN K is entered on Line 2, Part 1 of LTG-6-C.

Display Lighting - Floors

When retail spaces include sales floor display lighting, the lighting must be documented according to the display lighting procedure established in the section above on *Error! Reference source not found.*~~**????.**~~.

Complete the upper portion of Part 3 of this LTG-6-C, using the following steps.

1. COLUMN A - lists the name of the sales floor display. See the section above on *Error! Reference source not found.* for more information on the definition of Sales Floor Display Lighting.
2. COLUMN B - lists the mounting height of the display luminaires. Section 5.1.2.2 contains a discussion on how to determine the mounting height of floor display luminaires.
3. COLUMN C - lists the mounting height adjustment factor for floor display luminaires, found in Table146-D in the Standards.
4. COLUMN D - lists the area of each space with floor displays from the plans. This area must be totaled at the bottom of the column.
5. COLUMN E - lists the Lighting Power Allowance density from Standards Table 146-D using the mounting height adjustment factors (COLUMNS C and D) for display luminaires. This allowance will always be based on illuminance category G.
6. COLUMN F - is the product of the mounting height adjustment factor (COLUMN C), the task area (COLUMN D) and the lighting power density (COLUMN E).
7. COLUMN G - lists the luminaire name (consistent with LTG-1-C and LTG-2-C) that is illuminating the display. If more than one luminaire type is used to illuminate the display, each type must be separately listed. Multiple lines on this form may be used for this list.
8. COLUMN H - lists the quantity of luminaires used to illuminate the display. If track lighting is used, and the plans do not indicate the number of fixtures to be used on the track, the actual length of the track is entered in this column.
9. COLUMN I - lists the total wattage of each luminaire type (including ballasts for fluorescent or high intensity discharge fixtures). For track and incandescent medium base socket fixtures, see the section above on **Error! Reference source not found.** for how to determine the watts of these types of luminaires. If track lighting is used, and the fixtures are not shown on the plans, enter 45 watts per foot of track in this column.
10. COLUMN J - is the product of the quantity of luminaires (COLUMN H) times the watts per luminaire (COLUMN I). If more than one luminaire type is used to illuminate the task or activity, the subtotal for all the luminaires illuminating the task should be indicated in this column on a separate line of the form.
11. COLUMN K - is the lesser of either the allotted watts (COLUMN F) or the design watts (COLUMN J).
12. The sum of the allowed watts for floor display lighting in COLUMN K is entered on Line 2, Part 1 of LTG-6-C.

LTG-5C: Part 3 of 3

Ornamental and Special Effects Lighting includes chandeliers, sconces, lanterns, neon and cold cathode, light emitting diodes (LEDs), theatrical projectors, moving lights and light color panels (used decoratively, not as display lighting). If allowed in Standards Table 146-D column 5, use this form to compute the power allowance.

1. COLUMN A - lists the name of the luminaire or lighting type.
2. COLUMN B - lists area of the space that contains the chandelier or special effects lighting.
3. COLUMN C - lists the lighting power allowance density from COLUMN 5 of Standards Table 146-D.
4. COLUMN D - is the product of the area (COLUMN B) and the lighting power density (COLUMN C).
5. COLUMN E - lists the luminaire name (consistent with LTG-1-C and LTG-2-C). Multiple lines on this form may be used to list multiple luminaires.
6. COLUMN F - lists the quantity of luminaires used for ornamental or special effects lighting. If track lighting is used, and the plans do not indicate the number of fixtures to be used on the track, the actual length of track is entered in this column.
7. COLUMN G - lists the total wattage of each luminaire type (including ballasts for fluorescent or high intensity discharge fixtures). For track, and incandescent medium base socket fixtures, see the section above on ?????. for how to determine the watts of these types of luminaires. If track lighting is used, and the fixtures are not shown on the plans, enter 45 Watts per foot of track in this column.
8. COLUMN H - is the product of the quantity of luminaires (COLUMN F) times the watts per luminaire (COLUMN G). If more than one luminaire type is used to illuminate the task or activity, the subtotal for all the luminaires illuminating the task should be indicated in this column on a separate line of the form.
9. COLUMN I - is the lesser of either the allotted watts (COLUMN D) or the design watts (COLUMN H).

The sum of the allowed watts for ornamental/special effects lighting in COLUMN I is entered on Line 2, Part 1 of LTG-6-C.

Very Valuable Merchandise Display Cases that contain jewelry and other valuable merchandise are Lighting Power Allowance for each square foot of lighted display case counter top, as shown in Table 146 D in the Standards. These displays may include jewelry, coins, fine china or crystal, precious stones, silver or other precious metal, small art objects and artifacts, or other valuable collections that require inspection of fine detail from outside a locked case.

1. COLUMN A - lists the name of the luminaire or location.
2. COLUMN B - lists area of the space.
3. COLUMN C - lists the Lighting Power Allowance density from Column 5 of Standards Table 146-D.
4. COLUMN D - is the product of the area (COLUMN B) and the lighting power density (COLUMN C).
5. COLUMN E - lists area of the display case.
6. COLUMN F - is already listed and is 20 watts per square foot.

7. COLUMN G - is the product of the area (COLUMN E) and the lighting power density (COLUMN F = 20 watts per square foot).
8. COLUMN H - lists the luminaire code (consistent with LTG-1-C and LTG-2-C). Multiple lines on this form may be used to list multiple luminaires.
9. COLUMN I - lists the quantity of luminaires used for very valuable display lighting. If track lighting is used, and the plans do not indicate the number of fixtures to be used on the track, the actual length of track is entered in this column.
10. COLUMN J - lists the total wattage of each luminaire type (including ballasts for fluorescent or high intensity discharge fixtures). For track and incandescent medium base socket fixtures, see the section on ???. for how to determine the watts of these types of luminaires. If track lighting is used, and the fixtures are not shown on the plans, 45 watts per foot of track is entered in this column.
11. COLUMN K - is the product of the quantity of luminaires (COLUMN I) times the watts per luminaire (COLUMN J). If more than one luminaire type is used to illuminate the task or activity, the subtotal for all the luminaires illuminating the task should be indicated in this column on a separate line of the form.
12. COLUMN L - is the lesser of either the allotted watts for the space area (COLUMN D), the allotted watts for the very valuable display area (Column G), or the design watts (COLUMN K).

The sum of the allowed watts for ornamental/special effects lighting in COLUMN L is entered on Line 2, Part 1 of LTG-6-C.

As with all applications in illuminance category G, the allowed lighting watts for feature displays may not exceed the actual installed wattage. This prevents unused display lighting allotments from being used in other areas of the store.

5.7.7 LTG-6C: Room Cavity Ratio Worksheet (>3.5)

Form LTG-7-C is an optional form to be used only in conjunction with the Tailored Method and form LTG-6-C. LTG-7-C documents the calculation of room cavity ratios (RCRs) that are greater than or equal to 3.5 for spaces in illuminance categories A-G.

Rooms in a building which are relatively large generally have a high RCR. If the RCR is greater than or equal to 3.5, a higher LPD is allowed. If the RCR is less than 3.5, it does not need to be included on this form.

The form has two sections: **Rectangular Spaces** is for rooms with four 90° walls, and **Non-rectangular Spaces** is for all other room types (including oblique four walled and circular rooms).

Rectangular Spaces

1. COLUMN A - lists each room's number, and should correspond to the plans.
2. COLUMN B - lists the task/activity description for the room. If the room has multiple tasks or activities, use the dominant activity for the room in this column.
3. COLUMN C - lists the length (L) of the room, measured in feet, from the interior surfaces of opposing walls. The length is typically the longest distance between two parallel walls in the room.

4. COLUMN D - lists the width (W) of the room, measured in feet, from the interior surfaces of opposing walls. The width is typically the smallest distance between two parallel walls in the room.
5. COLUMN E - lists the vertical distance, measured in feet, from the work plane to the center line of the lighting fixture. This measurement is called the room cavity height (H).
6. COLUMN F - is 5 times the product of the room cavity height H (from COLUMN E) and the sum of the room length and width (L from COLUMN C plus W from COLUMN D), all divided by the room area L (from COLUMN C) times room width (W from COLUMN D). This quantity is the RCR and should be entered in COLUMN D of Part 1 of LTG-6-C for tasks with illuminance categories A-G.

Non-rectangular Spaces

7. COLUMN A - lists each room's number, and should correspond with the plans.
8. COLUMN B - lists the area or activity description for the room. If the room has multiple tasks or activities, use the dominant activity for the room in this column.
9. COLUMN C - lists the interior area (A) of the room in square feet. This should be determined by whatever means appropriate for the shape of the room.
10. COLUMN D - lists the room perimeter (P) measured in feet along the interior surfaces of the walls that define the boundaries of the room. For rooms with angled walls, this is the sum of the interior lengths of each wall in the room. For circular rooms, this is the interior radius of the room, squared, times pi (3.413).
11. COLUMN E - lists the vertical distance, measured in feet, from the work plane to the center line of the lighting fixture. This measurement is called the room cavity height (H).
12. COLUMN F - is 2.5 times the product of the room cavity height H (from COLUMN E) and room perimeter P (from COLUMN D), all divided by the room area A (from COLUMN C). This quantity is the RCR and should be entered in COLUMN D of Part 1 of LTG-6-C for tasks with illuminance categories A-G.

5.7.8 LTG-7C: Line Voltage Track Lighting Worksheet

LTG-9-C should be used to identify and account for all line voltage track lighting. (Line voltage track typically operates around 120 volts or greater). Completing this form and entering the results on LTG-2-C calculate the installed lighting power for line voltage track lighting.

To determine luminaire wattage incorporated into the installed lighting power for line voltage track lighting, use one of the two Methods described in 5.4.3 of the Nonresidential Manual.

Method 1 - Volt-Ampere (VA) Rating of the Branch Circuit(s) Feeding the Tracks or the Wattage of Integral Current Limiters

1. COLUMN A - list the name or number that identifies the branch circuit feeding the track. This column must be filled for all branch circuits feeding track lighting systems.
2. COLUMN B - list the volt-ampere rating of the branch circuit identified in column A. Fill out this column only when you are using the VA of the branch circuit to determine the wattage of the track(s). If integral current limiters are used to determine the wattage of the tracks, leave this column blank.
3. COLUMN C - Check the boxes to indicate if integral current limiters are used. Columns (C) thru (G) must only be filled out if the current limiter option is used to determine the wattages of all or some of the tracks connected to the branch circuit. These columns may be left blank if the branch circuit option is used to determine the wattage of the track(s)
4. COLUMN D – If the box(es) in column (C) is checked, list the wattage of the current limiter.
5. COLUMN E – List the length of the track.
6. COLUMN F – If the track is equipped with an integral current limiter, multiply the value in column (E) by 15 watts per linear foot. If the track is not equipped with an integral current limiter, multiply the value in column (E) by 45 watts per linear foot.
7. COLUMN G – List the wattage of the track, which is the higher of columns (D) or (F)
8. SUB-TOTALS –Sub-totals are the sum of all track watts listed in column (G). If the branch circuit option is used to determine the wattage of the track(s), sub-total is the value listed in column (B).
9. TOTAL WATTS – Total watts are the sum of all sub-totals.

Method 2 - Use The Higher Of:

45 watts per linear foot of track, or the maximum relamping rated wattage of all luminaires.

1. COLUMN A - list the name or number that identifies the track lighting.
2. COLUMN B - list the linear feet of track lighting identified in column A
3. COLUMN C - is 45 watts per linear feet. This number is required for using Method 2.
4. COLUMN D - Multiply the number in column B by the number in column C.
5. COLUMN E - Determine the rated wattage of each luminaire (track head) that will be installed on the line voltage track identified in column A according to
   §130 (c) of the Standards. Luminaire wattage for incandescent track heads shall be the maximum relamping rated wattage as listed on a permanent factory-installed label according to §130 (c) 1. Luminaire wattage for fluorescent and high intensity discharge (HID) track heads shall be the operating input wattage of the rated lamp/ballast combination according to §130 (c) 2. Luminaire wattage for low-voltage track heads (when mounted on line-voltage track) shall be the maximum rated wattage of the transformer on each track head according to §130

(c) 5. Add up the wattage for every luminaire that will be installed on the identified track and enter the total amount as the rated wattage.

6. COLUMN F - list the larger number from column D or column E. This is the installed lighting power for the track listed in column A. Add up all of the numbers in column F and list the total at the bottom. Enter this number in LTG-2-C for the installed lighting power of the track lighting systems determined by this method.

DRAFT

5.8 Installation Certificate

Narrative still needed

5.8.1 Certificate of Acceptance

Acceptance tests are used to verify that lighting controls were installed and calibrated correctly. These tests require that a responsible party certify that controls are installed and calibrated properly. This responsible party is typically the contractor who installed the lighting controls. To verify that they are calibrated properly, the responsible party must conduct a test and make modifications to the control until it passes the test. The test results must be recorded on acceptance test forms and are part of the building documentation. These forms must be filled out before the building authority grants a certificate of occupancy.

The Standards have acceptance test requirements for:

- Manual daylighting controls
- Automatic daylighting controls.
- Occupancy sensors.
- Automatic time-switch controls.

A detailed description of each acceptance test can be found in Chapter 10 of this manual, Acceptance Requirements.

DRAFT

6. Outdoor Lighting ~~and Signs~~

6.1 Overview
- 6.1.1 History and Background
- 6.1.2 Scope and Application
  - A Tradeoffs
  - B Lighting Applications Not Regulated
- 6.1.3 Summary of Requirements
  - A Mandatory Measures
  - B Lighting Power
  - C Signs

6.2 Mandatory Measures
- 6.2.1 Certification
- 6.2.2 Minimum Lamp Efficacy
- 6.2.3 Cut-Off Luminaires
- 6.2.4 Automatic Shutoff Controls
- 6.2.5 Multi-Level Switching

6.3 Lighting Zones and Outdoor Lighting Ordinances
- 6.3.1 Overview
- 6.3.2 Outdoor Lighting Zones
- 6.3.3 Lighting Zone Adjustments by Local Jurisdictions
  - A Options for Parks…
  - B Options for Rural…
  - C Options for Urban…
  - D How to Determine..
  - E How to Use US…
  - F Energy Commission web…
  - G Examples for ….
- 6.3.4 Amending Outdoor Ordinances by Local Jurisdictions

6.4 Outdoor Lighting Power Compliance
- 6.4.1 Maximum Outdoor Lighting Power
- 6.4.2 Illuminated Area

6.5 General Hardscape Lighting Power Allowance
- 6.5.1 General Hardscape Power Trade-Offs
- 6.5.2 Area Wattage Allowances (AWA)
- 6.5.3 Linear Wattage Allowances (LWA)
- 6.5.4 Initial Wattage Allowances (IWA)

6.6 Additional Lighting Power Allowances for Specific Applications
- 6.6.1 Specific Allowances Power Trade-Offs
- 6.6.2 Wattage Allowances per Application (Watts)
- 6.6.3 Wattage Allowances per Unit Length (Watts per linear foot)
- 6.6.4 Wattage Allowance per Hardscape Area (Watts per square foot)
- 6.6.5 Wattage Allowances per Specific Areas (Wattage per square foot)
- 6.6.6 Further Discussion about Additional Lighting Power Allowances for Specific Applications
  - A Building Facades
  - B Sales Frontage
  - C Vehicle Service Stations

DRAFT

D Under Canopies
E Ornamental Lighting
F Drive-Up Windows
G Guarded Facilities

6.7 Additional Lighting Power Allowances for Lighting Ordinance Requirements
6.7.1 Local Lighting Ordinance Allowances Power Trade-Offs
6.7.2 Additional Lighting Power

6.8 Alterations and Additional for Outdoor Lighting
6.8.1 Outdoor Lighting Additions – Mandatory and Lighting Power Density Requirements
6.8.2 Outdoor Lighting Alterations
6.8.3 Outdoor Lighting Alterations – Mandatory Requirements
6.8.4 Outdoor Lighting Alterations – Lighting Power Allowance Requirements

6.9 Compliance and Enforcement
6.9.1 Outdoor Lighting Plan Check Documents
6.9.2 Installation Certificate
6.9.3 Certificate of Acceptance

This chapter covers the requirements for outdoor lighting design and installation, including controls. This section applies to all outdoor lighting, whether attached to buildings, poles, structures or self supporting, including but not limited to, hardscape areas including parking lots, lighting for building entrances, sales and non-sales canopies; lighting for all outdoor sales areas; and lighting for building facades. It is addressed primarily to lighting designers or electrical engineers and to enforcement agency personnel responsible for lighting and electrical plan checking and inspection. Chapter 5 addresses outdoor lighting applications, and chapter 7 addresses sign lighting applications.

DRAFT

6.1 Overview

The outdoor lighting ~~and sign~~ energy standards conserve energy, reduce winter peak electric demand, and are technically feasible and cost effective. They set minimum control requirements, maximum allowable power levels, minimum efficacy requirements, and require cutoff classification for large luminaires.

The lighting power allowances are based on current Illuminating Engineering Society of North America (IESNA) recommendations for the quantity and design parameters of illumination, current industry practices, and efficient sources and equipment that are readily available. Data indicates that the IESNA recommendations provide more than adequate illumination, since a 2002 baseline survey of current outdoor lighting practice in California suggests that the majority of establishments currently are illuminated at substantially lower levels than IESNA recommendations.[1]

Outdoor lighting ~~and sign lighting are~~is addressed in this chapter. Lighting in unconditioned buildings is addressed in Chapter 5~~.~~

[1] Integrated Energy Systems Productivity and Building Science, Outdoor Lighting Baseline Assessment, New Buildings Institute, August 12, 2002

The Standards do not allow tradeoffs between outdoor lighting power allowances and indoor lighting, ~~or~~ sign lighting, HVAC, building envelope, or water heating (§147(a)).

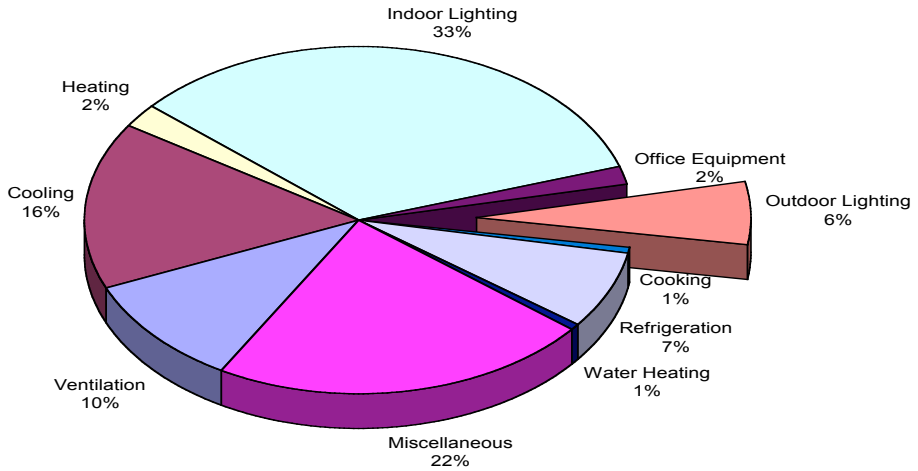

Figure 6-1 – Energy Consumption by End-Use

6.1.1 History and Background

DRAFT

In response to the 2000 electricity crisis, the legislature charged the Energy Commission to develop outdoor lighting energy efficiency standards that are technologically feasible and cost-effective. The intent of the legislature was that the Standards would provide ongoing reliability to the electricity system and reduce energy consumption.

Regulations for lighting have been on the books in California since 1977, but have only addressed indoor lighting through control requirements and maximum allowable lighting power. ~~With the~~In 2005 Standards the scope ~~is~~was expanded to include outdoor lighting applications as well as indoor applications in unconditioned buildings.

The ~~2005~~2008 Outdoor Lighting Standards evolved over a ~~two~~three-year period through a dynamic, open, public process. The Energy Commission encouraged all interested persons to participate in a series of public hearings and workshops through which the Energy Commission gathered information and viewed presentations on energy efficiency possibilities from a variety of perspectives. The Energy Commission hired a consulting team that included a number of nationally recognized outdoor lighting experts to assist in the development of the Standards. The Energy Commission also solicited ideas, proposals, and comments from a number of interested parties.

There is a significant structural change in the application of the 2008 Outdoor Lighting Standards. In the initial version of the Title 24 Outdoor Lighting Standards (2005) an outdoor site was segmented into function areas similar to

the structure used for compliance with the Area Category Method for nonresidential indoor lighting. In an effort to provide clarity and simplify compliance documentation, the 2008 Outdoor Lighting Standards are structured according to a new "layered" approach. With the new layered approach, the first layer of allowed lighting power is for general hardscape for the entire site. After that layer of allowed lighting power has been determined, additional layers of lighting power are allowed for specific areas. For example, allowed power for sales lot frontage for a car lot would be determined by layering the hardscape, sales lot, and sales frontage allowances.

6.1.2 Scope and Application

~~Prior to 2005, the Standards only applied to interior and outdoor lighting that was associated with conditioned buildings; that is buildings that are heated or cooled. The Standards now address lighting in unconditioned buildings (§146) as well as general site illumination and specific outdoor lighting applications (§147).~~ The outdoor lighting applications that are addressed by the Standards are shown in the first two columns of Table 6-1~~Table 16-1~~. The first column is general site illumination applications, which allow for tradeoffs. The second column is specific outdoor lighting applications.~~, each of which must comply on their own without tradeoffs~~. The lighting applications in the third column are not regulated (either controls or lighting power). The Standards include control requirements as well as limits on installed lighting power. ~~The Standards also apply to internally illuminated and externally illuminated signs.~~

A. Tradeoffs

The Standards do not allow tradeoffs between outdoor lighting power allowances and indoor lighting, sign lighting, HVAC, building envelope, or water heating [(§147(a)].

~~Lighting tradeoffs are allowed between the lighting applications included in Standards Table 147-A General Illumination of the Site, which includes hardscape areas, building entrance without canopies, and outdoor sales lots.~~

~~The Standards do not allow tradeoffs between outdoor lighting power allowances and indoor lighting or sign lighting, HVAC, building envelope, or water heating [(§147(a)]. No tradeoffs are allowed between the specific lighting applications in Standards Table 147-B (so called use-it or lose-it allowances), or between the lighting applications included in Standards Table 147-B and Standards Table 147-A.~~

Allowed lighting power determined according to §147(d)1 for general hardscape lighting may be traded to specific applications in §147(d)2, provided the luminaires used to determine the illuminated area are installed as designed. This means that if luminaires used to determine the total illuminated area are removed from the design, resulting in a smaller illuminated area, then the general hardscape lighting power allowance must also be reduced accordingly.

Allowed lighting power for specific applications shall not be traded between specific applications, or to hardscape lighting in §147(d)1. This means that for each and every specific application, the allowed lighting power is the smaller of

DRAFT

the allowed power determined for that specific application according to §147(d)2, or the actual installed lighting power that is used in that specific application.

Allowed lighting power determined according to §147(d)3 for additional lighting power allowances for local ordinance shall not be traded to specific applications in §147(d)2 or to hardscape areas not covered by the local ordinance. These additional power allowances are "use-it or lose-it" allowances.

Trading off lighting power allowances between outdoor and indoor areas shall not be permitted.

Table 6-1 – Scope of the Outdoor Lighting Requirements

Lighting Applications Covered		Lighting Applications Not Regulated
General Hardscape (tradeoffs permitted)	Specific Applications (tradeoffs not permitted)	(only as detailed in §147)
The general hardscape area of a site shall include parking lot(s), roadway(s), driveway(s), sidewalk(s), walkway(s), bikeway(s), plaza(s), and other improved area(s) that are illuminated.	Canopies: Sales and Non-sales Drive-Up Windows Emergency Vehicle Facilities. Entrances or Exits Facades Guard Stations Ornamental Lighting Outdoor Dining Primary Entrances for Senior Care Facilities, Police Stations, Hospitals, Fire Stations, and Emergency Vehicle Facilities Sales Frontage and Lots Special Security Lighting for Retail Parking and Pedestrian Hardscape Student Pick-up/Drop-off zone Vehicle Service Station: Canopies, Hardscape, and Uncovered Fuel Dispenser	Temporary Required & regulated by FAA Required & regulated by the Coast Guard. For public streets, roadways, highways, and traffic signage lighting, and occurring in the public right-of-way. For sports and athletic fields, and children's playground. For industrial sites For AMT required by law For public monuments. Signs For water features subject to Article 680 of the California Electrical Code. For tunnels, bridges, stairs, wheelchair elevator lifts For ramps that are other than parking garage ramps. Landscape lighting. For themes and special effects. For theatrical and other outdoor live performances For qualified historic buildings
Other outdoor lighting applications that are not included in Standards Tables 147-A, 147-B or 147-C are assumed to be not regulated by these Standards. This includes decorative gas lighting~~, lighting for theatrical purposes, including, stage, and film and video production,~~ and emergency lighting powered by an emergency source as defined by the California electrical code. The text in the above list of lighting applications that are not regulated has been shortened for brevity. Please see Section 6.1.2 B below for details about lighting applications not regulated.		

DRAFT

B. Lighting Applications Not Regulated

When a luminaire is installed only to illuminate one or more of the following applications, the lighting power for that luminaire shall be exempt from §147(b). The Standards clarify that at least 50% of the light from the luminaire must fall on an application to qualify as being installed for that application.

A. Temporary outdoor lighting. Temporary Lighting is defined in §101 as a lighting installation with plug-in connections that

does not persist beyond 60 consecutive days or more than 120 days per year.

B. Lighting required and regulated by the Federal Aviation Administration, and the Coast Guard.

C. Lighting for public streets, roadways, highways, and traffic signage lighting, including lighting for driveway entrances occurring in the public right-of-way.

D. Lighting for sports and athletic fields, and children's playground.

E. Lighting for industrial sites, including but not limited to, rail yards, maritime shipyards and docks, piers and marinas, chemical and petroleum processing plants, and aviation facilities.

F. Lighting specifically for Automated Teller Machines as required by California Financial Code Section 13040, or required by law through a local ordinance.

G. Lighting of public monuments.

H. Signs. Signs shall meet the requirements of §148.

I. Lighting used in or around swimming pools, water features, or other locations subject to Article 680 of the California Electrical Code. Only lighting that is specifically subject to Article 680 of the California Electrical Code is exempt from §147(b). Article 680 addresses lighting installed directly above the water in an outdoor pool; spa, hot tub, fountain, or pool lighting in an area extending between 5 feet and 10 feet horizontally from the inside walls of a pool; and underwater luminaires. Refer to Article 680 of the California Electrical Code for specific language.

J. Lighting of tunnels, bridges, stairs, wheelchair elevator lifts for American with Disabilities Act (ADA) compliance, and ramps that are other than parking garage ramps.

K. Landscape lighting. Landscape lighting is defined in §101 as lighting that is recessed into or mounted on the ground, paving, or raised deck, which is mounted less than 42" above grade or mounted onto trees or trellises, and that is intended to be aimed only at landscape features. Lighting installed for a purpose other than landscape, such as walkway lighting, shall not be considered exempt landscape lighting if only incidental lighting from the walkway luminaires happens to spill onto the landscape.

L. In theme parks: outdoor lighting for themes and special effects. However, all non-theme lighting, such as area lighting for a parking lot, shall not be considered theme lighting, even if the area luminaires are mounted on the same poles as the theme lighting.

M. Lighting for outdoor theatrical and other outdoor live performances, provided that these lighting systems are additions to area lighting systems and are controlled by a multiscene or theatrical cross-fade control station accessible only to authorized operators.

DRAFT

N. Outdoor lighting systems for qualified historic buildings, as defined in the California Historic Building Code (Title 24, Part 8), if they consist solely of historic lighting components or replicas of historic lighting components. If lighting systems for qualified historic buildings contain some historic lighting components or replicas of historic components, combined with other lighting components, only those historic or historic replica components are exempt. All other outdoor lighting systems for qualified historic buildings shall comply with §147(b).

6.1.3 Summary of Requirements

§119, §130, §132, and §147 ~~and §148~~

A. Mandatory Measures

The Standards require that outdoor lighting be automatically controlled so that it is turned off during daytime hours and during other times when it is not needed. The mandatory measures also require that most of these controls be certified by the manufacturer and listed in the Energy Commission directories. Luminaires with lamps larger than 175 watts must be classified as cutoff so that the majority of the light is directed toward the ground. Luminaires with lamps larger than 60 watts must also be high efficacy or controlled by a motion sensor. More detail on the mandatory measures is provided in Section 6.2~~???~~.

B. Lighting Power

The installed power for outdoor lighting applications shall be determined in accordance with §130(d) or Nonresidential Appendix NA-8.The requirements for determining luminaire input power for outdoor lighting applications are identical to the requirements for indoor lighting. See Section 5.4 for additional information about determining installed lighting power.

The ~~2005~~ Standards limit the lighting power for general hardscape area of a site ~~illumination~~ and for specific outdoor lighting applications as follows:~~.~~

(a) Lighting power allowances for the general hardscape area of a site shall include parking lot(s), roadway(s), driveway(s), sidewalk(s), walkway(s), bikeway(s), plaza(s), and other improved area(s) that are illuminated..

~~General site illumination includes parking lots, driveways, walkways, building entrances, sales lots, and other paved areas of the site (see column one of Table 1-1). The Standards provide a separate allowance for each of these general site lighting applications, but tradeoffs are permitted among these applications. Essentially, one outdoor lighting budget can be calculated for all these general site applications together. Section **Error! Reference source not found.** has more information on general site illumination~~.

DRAFT

(b) Additional lighting power allowances are available for specific applications in accordance with Table 147-B for the appropriate lighting zone.

(c) Additional lighting power allowances may also be available for hardscape areas, including parking lots, site roadways, driveways, sidewalks, walkways or bikeways, when specific light levels are required by law through a local ordinance, and provided the local ordinance meets the public process requirements in §10-114 for adopting those specific light levels.

~~Specific outdoor lighting applications include building facades, canopies, ornamental lighting, and the front row of car lots (outdoor sales frontage) [see column two of Table 1-1 for a complete list]). Trade-offs are not permitted for specific lighting applications. Each application must comply on its own. Section **Error! Reference source not found.** has more information on specific lighting applications.~~

The allowable lighting power for both general site illumination and specific applications are based on four separate outdoor Lighting Zones. The Lighting Zones characterize ambient lighting in the surrounding areas. Sites with higher ambient lighting levels (Zones 3 or 4) have a larger allowance than sites with lower ambient lighting levels (Zones 1 or 2). Section 6.3 has more information on Lighting Zones.

C. Signs

Lighting Standards for both indoor and outdoor signs are separately addressed in Chapter 7.

DRAFT

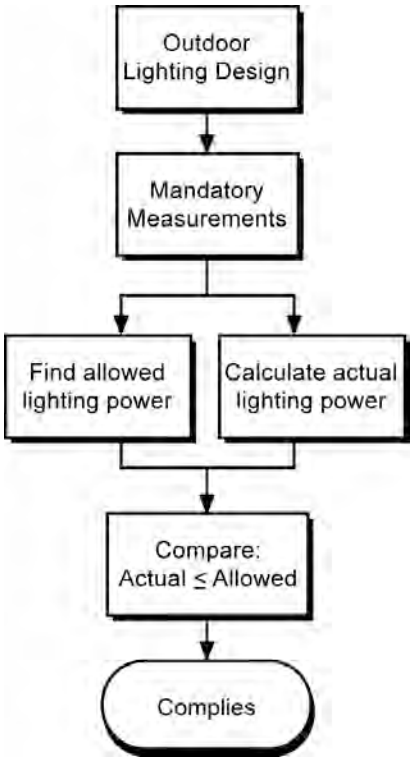

Figure 6-22 – Outdoor Lighting Compliance Flowchart

Signs

Lighting Standards for both indoor and outdoor signs are separately addressed in Chapter 7

Installed Power

§130 (c)

The installed power for outdoor lighting applications shall be determined in accordance with §130 (cd). The requirements for determining luminaire input power for outdoor lighting applications are identical to the requirements for indoor lighting. Please see Chapter 5,section 5..4 for additional information about determining installed lighting power. Luminaire power for pin-based and high intensity discharge lighting system types that are listed in ACM Manual Appendix NB may be used as an alternative to determine the wattage of outdoor luminaires. However, luminaires with screw-base sockets, and lighting systems which allow the addition or relocation of luminaires without altering the wiring of the system must be determined in accordance with §130 (c). Please see Chapter 5.4.3 of the Nonresidential Manual, Determining Luminaire Wattage, for additional discussion on installed power. Unlike indoor lighting, no power credits are offered for automatic controls. However, automatic controls are required by the mandatory measures.

DRAFT

6.2 __Mandatory Measures

The mandatory features and devices must be included in all outdoor lighting projects when they are applicable. These features have been proven to be cost-effective over a wide range of outdoor lighting applications. The mandatory measures require that the performance of certain equipment be certified by the manufacturers, that lighting systems have controls for efficient operation, that luminaires rated 100 watts or greater be high efficacy or be controlled by a motion sensor and that luminaires using lamps rated greater than 175 watts direct the majority of light toward the ground (cutoff type). Mandatory measures for outdoor lighting and signs are specified in §119, §130, and §132. These are similar to the mandatory measures for indoor lighting. Even if the design has errors and has specified incorrect features and devices, the installer is responsible to meet all of the applicable requirements that he or she installs. The installer is also required to sign the appropriate Installation Certificate to verify correct installation. See Section 6.8.2 for information on the Installation Certificate.

6.2.1 Certification

§119

Manufacturers of certain lighting control products shall certify the performance of their products to the California Energy Commission. It is the responsibility of the designer, however, to specify products that meet these requirements. Code enforcement officials, in turn, check that the lighting controls specified are indeed certified.

The certification requirement applies to photo controls, astronomical time switches, and automatic controls. Many of these requirements are part of standard practice in California and should be well understood by those responsible for designing or installing lighting systems.

All automatic outdoor lighting control devices must be certified by the manufacturer before they can be installed in a building. The manufacturer must certify the devices to the Energy Commission. Once a device is certified, it is listed in the Directory of Automatic Lighting Control Devices. Call the Energy Hotline at 1-800-772-3300 to obtain more information.

All control devices must have instructions for installation and start-up calibration, must be installed in accordance with such directions. ~~, and~~Occupancy and motion sensors must have a status signal (visual or audio) that warns of failure or malfunction. Photocell sensors and other devices may be considered exempt from this requirement if the status signal is infeasible because of inadequate power.

DRAFT

Example 6-1~~1~~

Question

What are the mandatory outdoor lighting requirements?

Answer

The mandatory outdoor lighting requirements include:

Minimum lamp efficacy requirements

- Cutoff requirements
- Automatic shutoff controls, and
- Multi-level switching

All lighting controls must meet the requirements of §119 of the Standards

Example 6-2

Question

What is the responsibility of the lighting designer with regard to using lighting controls that are certified by the Energy Commission and listed in the Energy Commission directories?

Answer

It is the responsibility of the manufacturer to certify the controls and to present the data to the Energy Commission so that it can be listed in the Energy Commission directories. ~~It is the responsibility of the lighting designer to specify controls that have been certified and listed.~~

Example 6-3

Question

What is the responsibility of the designer with regard to using lighting controls that are certified by the Energy Commission and listed in the Energy Commission directories?

Answer

It is the responsibility of the designer to specify only lighting controls that have been listed certified and listed in the Energy Commission directories.

Example 6-4

Question

What is the responsibility of the installer with regard to using lighting controls that are certified by the Energy Commission and listed in the Energy Commission directories?

Answer

It is the responsibility of the installer to install only controls that are certified by the Energy Commission and listed in the Energy Commission directories. It is also the responsibility of the installer to sign the Installation Certificate.

DRAFT

6.2.2 Minimum Lamp Efficacy

§132(a)

All outdoor luminaires with lamps rated over 100 watts must either: have a lamp efficacy of at least 60 lumens per watt or be controlled by a motion sensor. Lamp efficacy, for the purposes of complying with §132 (a), is the rated initial lamp lumens divided by the rated lamp power (watts), without including auxiliaries such as ballasts.

This requirement will mostly impact fixtures that are designed for mercury vapor lamps and larger wattage incandescent lamps. Most linear fluorescent, metal halide, and high-pressure sodium lamps have a lamp efficacy greater than 60 lumens per watt and will easily comply. A motion sensor is a device that automatically turns lights off soon after an area is vacated.

The minimum lamp efficacy does not apply, however, to the following applications:

1. Lighting required by a health or life safety statute, ordinance, or regulation, including but not limited to, emergency lighting.
2. Lighting used in or around swimming pools, water features, or other locations subject to Article 680 of the California Electrical Code. Only lighting that is specifically subject to Article 680 is exempt from the minimum lamp efficacy requirements. Article 680 addresses lighting installed directly above the water in an outdoor pool; spa, hot tub, or fountain, pool lighting in an area extending between 5 feet and 10 feet horizontally from the inside walls of a pool; spa, hot tub, or fountain lighting within 5 feet from the inside walls of the spa, hot tub, or fountain; and underwater luminaires. Please refer to Article 680 of the California Electric Code for specific language.
3. Searchlights.
4. Theme lighting for use in theme parks.
5. Lighting for film or live performances.
6. Temporary outdoor lighting. Temporary lighting is defined in §101.
7. Light emitting diode, light emitting capacitors, neon and cold cathode lighting.
8. Sign lighting.

DRAFT

Example 6-~~35~~

Question

I am installing luminaires with 26-watt pin-based compact fluorescent lamps on a school campus. The compact fluorescent lamps have an efficacy of less than 60 lumens per watt. Am I required to put these lamps on a motion sensor to comply with §132(a)?

Answer

No, even though the pin-based lamps are rated at less than 60 lumens per watt, they are less than 100 watt. Therefore, motions sensors are not required to comply with §132(a).

Example 6-64

Question

I am installing outdoor fixtures with screw-based sockets and I intend to use 60-W incandescent lamps. Am I required to put these fixtures on motion sensors?

Answer

For fixtures with screw-based sockets it depends on the maximum relamping rated wattage of the fixtures, not on the wattage of the lamps that are used. If the maximum relamping rated wattage of a screw-based fixture, as listed on a permanent factory-installed label is less than or equal to 100 watts then motion sensors are not required. However, if the maximum relamping rated wattage of the fixture, as listed on permanent factory-installed labels is more than 100 watts, or if the fixture is not labeled, then motion sensors will be required.

6.2.3 Cut-Off Luminaires

§132 (b)

Outdoor luminaires that use lamps rated greater than 175 watts in the following areas are required to be of the cutoff type:

~~(d)~~(a) Hardscape areas including parking lots and service stations hardscape

~~(e)~~(b) Building entrances

~~(f)~~(c) All sales and non-sales canopies

~~(g)~~(d) Outdoor dining

~~(h)~~(e) All outdoor sales areas

DRAFT

Both full-cutoff and cutoff luminaires meet the requirements of this section but only cutoff luminaires are required. To comply with this requirement the luminaire must be rated as "cutoff" in a photometric test report that includes any tilt or other non-level mounting condition of the installed luminaire. A cutoff luminaire is one where no more than 2.5 percent~~%~~ of the light output extends above the horizon (90 degrees above nadir[2]) and no more than 10 percent~~%~~ of the light output at or above a vertical angle of 80 degrees above nadir. The definition of cutoff, full cutoff, etc. is illustrated in Figure 6-1.

Cutoff is not required for outdoor luminaires when they are used to illuminate the following:

(a) ~~Internally illuminated, externally illuminated, and unfiltered s~~Signs.

(b) Lighting for building facades, public monuments, statues, and vertical surfaces of bridges.

(c) Lighting required by a health or life safety statute, ordinance, or regulation, including but not limited to, emergency lighting.

(d) Temporary outdoor lighting as defined by §101.

[2] Nadir is in the direction of straight down, as would be indicated by a plumb line. Ninety degrees above nadir is horizontal. Eighty degrees above nadir is 10 degrees below horizontal.

(e) Lighting used in or around swimming pools, water features, or other locations subject to Article 680 of the California Electrical Code. Only lighting that is specifically subject to Article 680 is exempt from the cutoff requirements. Article 680 addresses lighting installed directly above the water in an outdoor pool; spa, hot tub, or fountain, pool lighting in an area extending between 5 feet and 10 feet horizontally from the inside walls of a pool; spa, hot tub, or fountain lighting within 5 feet from the inside walls of the spa, hot tub, or fountain; and underwater luminaires. Please refer to Article 680 of the California Electric Code for specific language.

(f) Replacement of existing pole mounted luminaires in hardscape areas meeting all of the following conditions:

i. Where the existing luminaire does not meet the luminaire cutoff requirements in §132(b); and

ii. Spacing between existing poles is greater than six times the mounting height of the existing luminaires; and

iii. Where no additional poles are being added to the site; and

iv. Where new wiring to the luminaires is not being installed; and

v. Provided that the connected lighting power wattage is not increased.

DRAFT

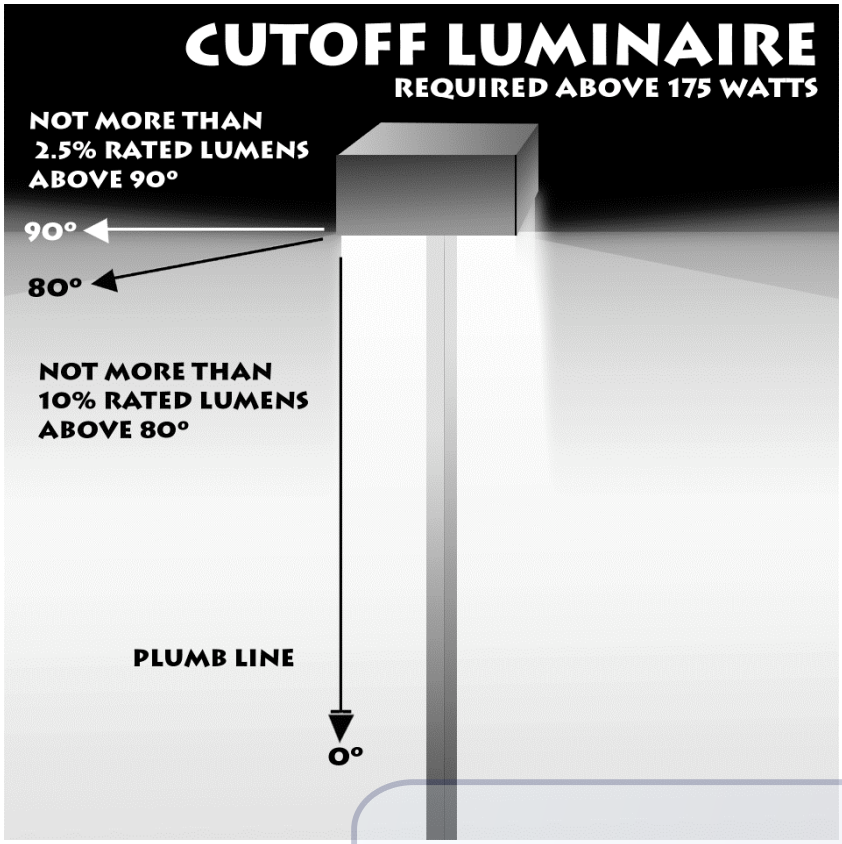

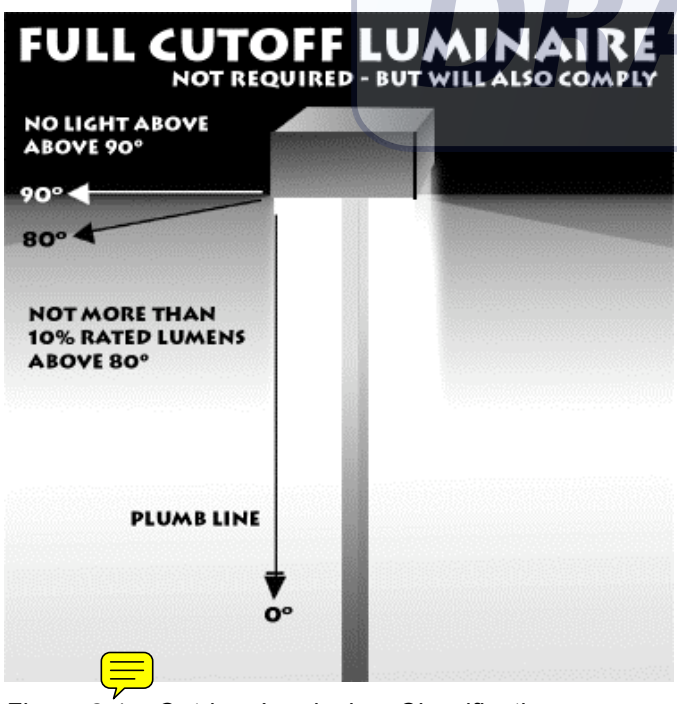

DRAFT

Figure 6-1 – Outdoor Luminaires Classifications

Example 6-~~5~~7

Question

Am I required to use cutoff luminaires in a rail yard?

Answer

No, only luminaires in areas such as hardscape areas, building entrances, canopies, or outdoor sales areas are required to meet the cutoff requirement. However, in this example, the parking lot outside the rail yard must be equipped with cutoff fixtures.

Example 6-~~6~~8

Question

Can full-cutoff luminaires be used to meet the cutoff requirements of the Standards in addition to cutoff luminaires?

Answer

Yes, you may use full-cutoff luminaires to meet the requirements of this section. Full cutoff luminaires have superior optics that can very effectively reduce or eliminate disability and discomfort glare, and other negative impacts of high intensity unshielded lighting.

Example 6-~~7~~9

Question

A parking lot adjacent to a building is being illuminated by 250-watt wallpacks mounted on the side of the building. Do these wall packs have to be cutoff luminaires? The wall packs are also illuminating the façade of the building, but their main purpose is for parking lot illumination.

Answer

Yes, these 250-watt wallpacks will have to be cutoff luminaires because their main purpose is for parking lot illumination. Luminaire mounting methods or locations do not necessarily determine the purpose of the illumination. Each luminaire must be appropriately assigned to the function area that it is illuminating, whether it is mounted to a pole, building, or other structure. Only wallpacks that are 175-watt or less can be non-cutoff.

Example 6-~~8~~10

Question

Can we use 250-watt, non-cutoff wallpacks for building façade lighting?

Answer

No, Even though façade lighting is exempt from the cutoff requirements, you cannot use non-cutoff wallpacks for façade lighting since most of the light from these fixtures will not illuminate the façade to which they are attached. ~~Only cutoff wallpacks will ensure that most~~Most 'wallpack' style luminaires do not direct the majority of the light exiting the fixture ~~will illuminate~~onto the façade~~, rather than other areas, such as the parking lots near by~~. Only wallpacks that are 175-watt or less can be non-cutoff.

Example 6-~~9~~11

Question

If a cutoff or full-cutoff luminaire is mounted at a tilt does it still meet the cutoff requirement?

Answer

It depends. Luminaires that meet the cutoff requirements when mounted at 90° to nadir may or may not comply with the cutoff requirement when they are mounted at a tilt. In order for a tilted luminaire to meet this requirement a photometric test report must be provided showing that the luminaire meets the cutoff requirements at the proposed tilt, or other non-level mounting condition. In most cases, a substantial tilt will result in a luminaire that does not meet the cutoff limits.

6.2.4 Automatic Shutoff Controls

§132(c)1.

All permanently installed outdoor lighting must be controlled by a photocontrol or astronomical time switch that automatically turns off the outdoor lighting when daylight is available.

Automatic time switch control devices used to control outdoor lighting shall:

(a) Be capable of programming different schedules for weekdays and weekends; and

(b) Have program backup capabilities that prevent the loss of the device's schedules for at least 7 days, and the device's time and date setting for at least 72 ~~program and time setting for at least 10~~ hours if power is interrupted.

Outdoor astronomical time-switch controls used to control outdoor lighting shall:

~~1.~~(a) Contain at least 2 separately programmable channels per function area; and

~~2.~~(b) Have the ability to independently offset the on and off times for each channel by 0 to 99 minutes before or after sunrise or sunset; and

~~3.~~(c) Have sunrise and sunset prediction accuracy within +/- 15 minutes and timekeeping accuracy within 5 minutes per year; and

~~4.~~(d) Store ~~time zone, longitude and latitude in non-volatile memory~~ astronomical time parameters (used to develop longitude, latitude, time zone) for at least 7 days if power is interrupted; and

~~5.~~(e) Display date/time, sunrise and sunset; and

~~6.~~(f) Have an automatic daylight savings time adjustment; and

~~7.~~(g) Have automatic time switch capabilities specified in §119 (c).

This requirement does not apply for lighting in ~~parking garages,~~ tunnels, and large covered areas that require illumination during daylight hours.

Controls used to meet this requirement shall be certified by the manufacturer and listed in the Energy Commission directory.

DRAFT

6.2.5 Multi-Level Switching

§132(c)2.

For building facades, parking lots, ~~garages,~~ sales and non-sales canopies, ~~and all~~ outdoor sales areas and student pick-up/drop-off zones, where two or more luminaires are used, automatic time switch controls are required to provide the owner with the ability to turn off the lighting when it is not needed, ~~or~~ and to reduce the lighting power by at least 50 percent~~%~~ but not exceeding 80 percent~~%~~ when the lighting is not needed. This switching scenario is sometimes referred to as multi-level switching. Continuous dimming control strategies also satisfy this requirement as long as their dimming range encompasses the 50 percent~~%~~ to 80 percent~~%~~ power reduction range. The control must be certified to the Energy Commission in accordance with the applicable requirements of §119.

~~Exceptions apply to~~ The following applications are not required to use multi-level switching:

~~a)~~(a) Lighting required by a health or life safety statute, ordinance, or regulation, including but not limited to, emergency lighting.

~~b)~~(b) Lighting for steps or stairs that require illumination during daylight hours.

~~c)~~(c) Lighting that is controlled by both a motion sensor and photocontrol.

~~d)~~(d) Lighting for facilities that have equal lighting requirements at all hours and are designed to operate continuously. This may include a business that has substantial and continuous on-site traffic 24 hours a day. A grocery store that is open 24 hours a day typically does not need 100% of the parking lot lighting on all night long. The parking lot for a business that closes at night would not have equal lighting requirements at all hours.

~~e)~~(e) Temporary outdoor lighting as defined by §101.

~~a) Internally illuminated, externally illuminated, and unfiltered signs~~

(f) Signs. See Chapter 7 for a discussion of the requirements for sign lighting lighting controls (§133).

There are a number of options available to meet the requirements of this section. Automatic controls to reduce outdoor lighting by at least 50 percent but not exceeding 80 percent are required with all of these strategies. Following are a few examples:

~~A.~~(a) Dimmable lighting systems can be used to meet the outdoor multi-level switching requirements. For HID fixtures, the high-low strategy (i.e.: Having options of 100% or 60% of full rated lighting power) or continuous dimming capable of reducing the connected lighting power by 50 percent~~%~~ to 80 percent~~%~~ may be used. For HID and LED fixtures, stepped dimming is acceptable provided that all the steps are within

the 50 percent% to 80 percent% range. LED continuous dimming strategies are acceptable as long as their dimming capacity encompasses the 50 percent% to 80 percent% range. LEDs represent an attractive choice as they can be inexpensively and reliably dimmed.

B.(b) When there are two or more fixtures on a single pole, the fixtures can be switched separately

C.(c) Every other fixture or pole can be switched separately. This is also known as checkerboard switching

D.(d) Every other row of fixtures or poles can be switched separately

E.(e) The front half of a parking lot can be switched separately from the back half or sides of the parking lot

F.(f) Equip the lighting systems with motion sensors and photoelectric switches. This option works well with fluorescent and LED sources. HID sources may employ the hi-lohigh-low strategy with motion sensors.

Automatic controls to reduce outdoor lighting by at least 50 percent% but not exceeding 80 percent%b are required with all of these strategies

Example 6-1012

Question

Will a circuit breaker meet the multi-level switching requirements?

Answer

No, circuit breakers are not considered automatic switching. The Standards define automatic as being capable of operating without human intervention.

Example 6-1113

Question

The Standards specify that the automatic multi-level switch must be able to reduce the outdoor lighting power by at least 50%, but not exceeding 80%, for certain lighting applications. Can any point between 50% and 80% be chosen to satisfy this requirement?

Answer

Yes, any point between 50% and 80% will satisfy this requirement. This may be a single point or multiple points, as long as they are within this range. Continuous dimming systems also satisfy this requirement as long as their dimming capacity falls in the 50% to 80% range.

DRAFT

6.3 Lighting Zones and Outdoor Lighting Ordinances

6.3.1 Overview

§10-114

An important part of the Standards is to base the outdoor lighting power that is allowed, on how bright the surrounding conditions are. The Standards contain lighting power allowances for newly installed equipment and specific alterations that are dependent on which Lighting Zone the project is located in.

Also, the Standards allow additional outdoor lighting power to be installed when there are average or minimum light levels required by local ordinance. A local jurisdiction may officially adopt specific outdoor light levels, which shall be expressed as average or minimum footcandle levels, by following a public process that allows for formal public notification, review, and comment about the proposed change.

Some local or regional codes and ordinances may also limit the maximum lighting level, prohibit light trespass, or have night sky requirements. California Title 24 lighting energy Standards do not address these issues. However, there would be no conflict between the California Title 24 energy Standards and such local codes and ordinances.

6.3.2 Outdoor Lighting Zones

The technical basis for the~~se~~ differences in outdoor lighting zones described by the Illuminating Engineering Society of North America (IESNA), is that the eyes adapt to darker surrounding conditions, and less light is needed to properly see; when the surrounding conditions get brighter, more light is needed to see. The least power is allowed in Lighting Zone 1 and increasingly more power is allowed in Lighting Zones 2, 3, and 4. Providing greater power than is needed potentially leads to debilitating glare, to an increasing spiral of brightness as over-bright projects become the surrounding conditions for future projects causing future projects to unnecessarily require greater power, and to wasting of energy.

The Energy Commission defines the boundaries of Lighting Zones based on U.S. Census Bureau boundaries for urban and rural areas as well as the legal boundaries of wilderness and park areas (see Standards Table 10-114-A). By default, government designated parks, recreation areas and wildlife preserves are Lighting Zone 1; rural areas are Lighting Zone 2; and urban areas are Lighting Zone 3. Lighting Zone 4 is a special use district that may be created by a local government.

DRAFT

Table 6-2 – Standards Table 10-114-A Lighting Zone Characteristics and Rules for Amendments by Local Jurisdictions

Zone	Ambient Illumination	State wide Default Location	Moving Up to Higher Zones	Moving Down to Lower Zones
LZ1	Dark	Government designated parks, recreation areas, and wildlife preserves. Those that are wholly contained within a higher lighting zone may be considered by the local government as part of that lighting zone.	A government designated park, recreation area, wildlife preserve, or portions thereof, can be designated as LZ2 or LZ3 if they are contained within such a zone.	Not applicable.
LZ2	Low	Rural areas, as defined by the 2000 U.S. Census.	Special districts within a default LZ2 zone may be designated as LZ3 or LZ4 by a local jurisdiction. Examples include special commercial districts or areas with special security considerations located within a rural area.	Special districts and government designated parks within a default LZ2 zone maybe designated as LZ1 by the local jurisdiction for lower illumination standards, without any size limits.
LZ3	Medium	Urban areas, as defined by the 2000 U.S. Census.	Special districts within a default LZ3 may be designated as a LZ4 by local jurisdiction for high intensity nighttime use, such as entertainment or commercial districts or areas with special security considerations requiring very high light levels.	Special districts and government designated parks within a default LZ3 zone may be designated as LZ1 or LZ2 by the local jurisdiction, without any size limits.
LZ4	High	None.	Not applicable.	Not applicable.

6.3.3 Lighting Zone Adjustments by Local Jurisdictions

§10-114
Table 10-114-A

DRAFT

The Energy Commission sets statewide default Lighting Zones. However, the jurisdictions (usually a city or county), may change the zones to accommodate local conditions. Local governments may designate a portion of Lighting Zones 2 or 3 as Lighting Zone 4. The local jurisdiction also may designate a portion of Lighting Zone 3 to Lighting Zone 2 or even Lighting Zone 1. When a local jurisdiction adopts changes to the Lighting Zone boundaries, it must follow a public process that allows for formal public notification, review, and comment about the proposed change. The local jurisdiction also must provide the Energy Commission with detailed information about the new Lighting Zone boundaries, and submit a justification that the new Lighting Zones are consistent with the specifications in §10-114 of the Standards.

The Energy Commission has the authority to disallow Lighting Zone changes if it finds the changes to be inconsistent with the specification of Standards Table 10-114-A or §10-114.

Following is a summary of the provisions of §10-114:

A. Options for Parks, Recreation Areas and Wildlife Preserves

The default for government designated parks, recreation areas, and wildlife preserves is Lighting Zone 1. The local jurisdiction having authority over the property will know if the property is a government designated park, recreation area, or wildlife preserve. However, when a park, recreation area, wildlife preserve, or portions thereof, are surrounded by urban areas (as defined by the U.S. Census Bureau), such areas may be designated as Lighting Zone 3 by adoption of the local jurisdiction. Similarly, a Lighting Zone 2 designation can be adopted if the area is surrounded by rural areas (as defined by the U.S. Census Bureau).

B. Options for Rural Areas

The default for rural areas, as defined by the U.S. Census Bureau, is Lighting Zone 2. However, local jurisdictions having building permit authority may designate certain areas as either Lighting Zone 3 or Lighting Zone 4 if the local jurisdiction determines that ambient lighting levels are higher than typical for a rural area. Examples of areas that might be designated Lighting Zone 3 are special commercial districts or areas with special security considerations.

Local jurisdictions also may designate default Lighting Zone 2 areas as Lighting Zone 1, which would establish lower lighting power for outdoor areas with lower surrounding brightness. An example of an area that might be changed to Lighting Zone 1 would include an underdeveloped area within a default Lighting Zone 2 area.

C. Options for Urban Areas

The default for urban areas, as defined by the U.S. Census Bureau, is Lighting Zone 3. Local jurisdictions may designate areas to Lighting Zone 4 for high intensity nighttime use, such as entertainment or commercial districts or areas with special security considerations requiring very high light levels.

Local jurisdictions also may designate areas as Lighting Zone 2 or even Lighting Zone 1 if they deem that this is appropriate.

DRAFT

D. How to Determine the Lighting Zone for an Outdoor Lighting Project

Permit applicants may determine the Lighting Zone for a particular property through the following steps:

Step 1 - Check with the local jurisdiction having authority over permitting of the property. The local jurisdiction will know if the property is a government designated park, recreation area, or wildlife preserve, and therefore in default Lighting Zone 1. The local jurisdiction also may know if the property is contained within the physical boundaries of a Lighting Zone for which a locally-adopted change has been made. However, verify through step 3 that a locally-adopted change has been submitted to the Energy Commission.

Step 2 - Look at the U.S. Census website to determine if the property is within a rural (statewide default Lighting Zone 2) or urban (statewide default Lighting Zone 3) census tract.

Step 3 - Check the Energy Commission's website to determine if the property is contained within the physical boundaries of a Lighting Zone that has been changed through a local jurisdiction adoption process.

E. How to Use the U.S. 2000 Census map to determine the default Lighting Zone (LZ)

Go to the US Census page, year 2000 geographic map

http://factfinder.census.gov/servlet/AdvancedGeoSearchMapFramesetServlet?_lang=en&_command=getPlacenames

The US Census Website provides a handy way to determine if a property is in rural (statewide default Lighting Zone 2) or urban (statewide default Lighting Zone 3) census tract.

A link to the U.S. Census Bureau can be found on the California Energy Commission web site: http://www.energy.ca.gov.

F. Energy Commission Web-based List

The Energy Commission maintains a web-based list of local adjustments to the default Lighting Zones. Jurisdictions are required to notify the Energy Commission of the change in designation, with a detailed specification that includes the following information:

~~(b)~~(a) The boundaries of the adopted Lighting Zones, consisting of the county name, the city name if any, the zip code(s) of the re-designated areas, and a description of the physical boundaries within each zip code.

~~(c)~~(b) A description of the public process that was conducted in adopting the Lighting Zone changes.

~~(d)~~(c) An explanation of how the adopted Lighting Zone changes are consistent with the specifications in the Standards.

DRAFT

G. Examples for Defining Physical Boundaries

Using Metes and bounds is a good method to use for defining the physical boundaries of an adopted Lighting Zone.

Metes and bounds is a system that uses physical features of the local geography, along with directions and distances, to define and describe the boundaries of a parcel of land. The boundaries are described in a running prose style, working around the parcel of the land in sequence, from a point of beginning, returning back to the same point. The term "metes" refers to a boundary defined by the measurement of each straight run, specified by a distance between the terminal points, and an orientation or direction.. The term

"bounds" refers to a more general boundary descriptions, such as along a certain watercourse or public road way.

Following are ~~There are basically two ways to~~ examples of using metes and bounds to define the physical boundaries of an adopted Lighting Zone: ~~by defining either a single corridor, or defining an area within specific boundaries.~~

~~1. Examples of defining a single corridor:~~

~~1.~~8. Properties with frontage on Mazi Memorial Expressway, between Hana Avenue and Elizabeth Street to a depth of 50 feet from each frontage property line.

~~2.~~9. The area 500 feet east of Interstate 5, from 500 feet north of Gary Ave to 250 feet south of West William Way.

~~3.~~10. The area of the Sara Bike Trail starting at Chris Avenue and going east to Eurlyne Park, the width of a path which is from the edge of the South Fork of the Payam River on one side, to 100 feet beyond the paved bike trail, or to private property lines, whichever is shorter, on the other side.

~~2. Example of using an area within specific, well-delineated boundaries:~~

~~1.~~11. The area that is bounded by the Nelson River on the west, Hudler Lane on the south, Jon Road on the east, and the boundary of Beverly County on the north.

Note: The physical boundaries of a changed Lighting Zone are not required to coincide with the physical boundaries of a census tract.

DRAFT

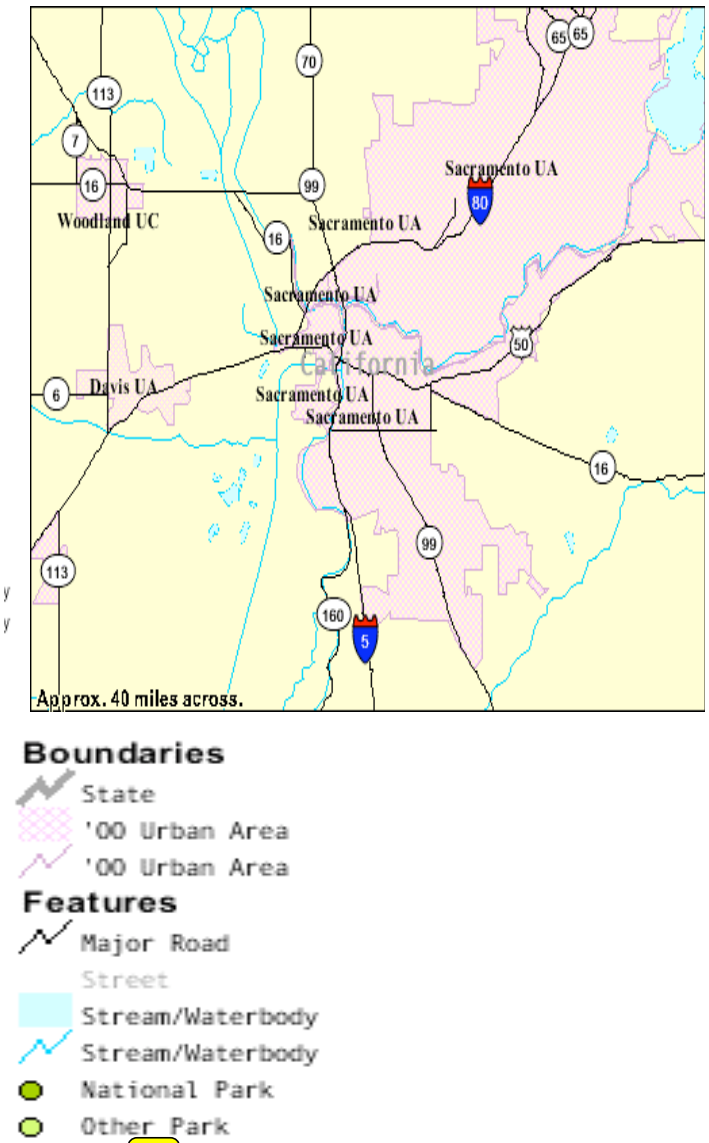

Figure 6-2 – Example of US Census Bureau Information

DRAFT

Example 6-12

Question

I want to have the default outdoor Lighting Zone for a particular piece of property changed. How do I accomplish that?

Answer

Check with the local jurisdiction having authority over the property and ask them what you need to do to petition them to have the default outdoor Lighting Zone officially adjusted.

6.3.4 Amending Outdoor Ordinances by Local Jurisdictions

§147(d)4 allows additional outdoor lighting power to be installed when there are local ordinance requirements for average or minimum footcandle levels. In accordance with §10-114, a local jurisdiction may officially adopt specific outdoor light levels, which shall be expressed as average or minimum footcandle levels, by following a public process that allows for formal public notification, review, and comment about the proposed. Local jurisdictions who adopt specific outdoor light levels shall notify the Commission by providing the following materials to the executive director:

(a) A description of the adopted specific light levels, consisting of all of the following details:

i. The minimum or average light levels adopted

ii. The applications where these light levels apply, and

iii. The county name, city name if any, and zip code(s) of all areas covered by the local ordinance.

(b) A description of the public process that was conducted in adopting the specific light levels.

DRAFT

The Standards only recognize light level ordinances which have officially been adopted by a local jurisdiction having authority, provided those ordinances have been registered with the Energy Commission as described above. The Standards do not recognize minimum light level requirements which have not been registered to the Commission, or minimum light level specifications established by other parties, such as retailers or other business.

6.4 __Outdoor Lighting Power ~~Allowances~~Compliance

An outdoor lighting installation complies with Standards if the actual outdoor lighting power is no greater than the allowed outdoor lighting power. This section describes the procedures and methods for complying with §147(a through d).

The allowed lighting power is determined by measuring the area or length of the lighting application and multiplying this area or length times the Lighting Power Allowance, which is expressed either in W/ft² or W/ft, respectively. The allowed lighting power must be calculated for either the general ~~illumination~~ hardscape lighting of the site, ~~or~~ for specific applications, and for areas covered under local minimum light level ordinances.

The area of the lighting application must be defined exclusive of any areas on the site that are not illuminated. ~~All outdoor luminaires must be assigned to a specific function area that each is respectively illuminating~~.

The actual lighting power of outdoor lighting is the total watts of all lighting systems (including ballast or transformer loss). See §147(~~b~~c).

The allowed outdoor lighting power is calculated by Lighting Zone as defined in §10-114. Local governments may amend Lighting Zones in compliance with §10-114. See section 6.3.4 for more information about amending outdoor ordinances by local jurisdictions.

6.4.1 Maximum Outdoor Lighting Power

The Standards establish maximum outdoor lighting power that can be installed. The allowed outdoor lighting power must be determined according to the Outdoor Lighting Zone in which the site is located. See section 6.3 for more information about Outdoor Lighting Zones.

The wattage of outdoor luminaires must be determined in accordance with §130(d). See section 5.5.3 for more information about determining luminaire wattage. The information in section 5.5.3 also applies to determining luminaire wattage for outdoor luminaires.

The total allowed lighting power is the combined total of all of the allowed lighting power layers. There are lighting power allowances for general hardscape lighting and lighting power allowances for specific applications. Some applications may also qualify for additional lighting power allowances for a local ordinance.

An outdoor lighting installation complies with the lighting power requirements if the actual outdoor lighting power installed is no greater than the allowed outdoor lighting power calculated under §147(d). The allowed lighting power shall be the combined total of the sum of the general hardscape lighting allowance determined in accordance with Section 147(d)1, the sum of the additional lighting power allowance for specific applications determined in accordance with Section 147(d)2, and the sum of the additional lighting power allowances for local ordinance determined in accordance with Section 147(d)3.

6.4.2 Illuminated Area

With indoor lighting applications, the entire floor area is considered to be illuminated for the purpose of determining the allowed lighting power. However, for outdoor lighting applications, the number of luminaires, their mounting heights and their layout affect the illuminated area and therefore the allowed lighting power.

The area of the lighting application may not include any areas on the site that are not illuminated. The area beyond the last luminaire is considered illuminated only if it is located within five mounting heights of the nearest luminaire.

In plan view of the site, the illuminated area is defined as any hardscape area within a square pattern around each luminaire or pole that is ten times the luminaire mounting height, with the luminaire in the middle of the pattern.

Another way to envision this is to consider an illuminated area from a single luminaire as the area that is five times the mounting height in four direction.

Illuminated areas shall not include any area that is within a building, under a canopy, beyond property lines, or obstructed by a sign or any other structure.

The primary purpose for validating the illuminated area is to not include any areas that are not illuminated. Areas that are illuminated by more than one luminaire shall not be double counted. Either an area is illuminated, or it is not illuminated.

When luminaires are located further apart than ten times their mounting height, then the illuminated area stops at five times the mounting height of each luminaire.

Planters and small landscape areas are included within the general hardscape area as long as the minor dimension of the inclusion is less than ten feet, and the inclusion is bordered on at least three sides.

Landscape areas that are greater than ten feet wide in the minor dimension are excluded from the general hardscape area calculation, but the perimeter of these exclusions may be included in the linear wattage allowance (LWA) calculation. See Section 6.5.3 for information about the LWA.

DRAFT

~~*6.1 General Site Illumination*~~

~~The Standards establish maximum outdoor lighting power that can be installed. The allowed outdoor lighting power must be determined according to the Outdoor Lighting Zone in which the site is located. Please see section 6.4 for more information about Outdoor Lighting Zones.~~

~~The wattage of outdoor luminaires must be determined in accordance with §130(d). Please see section 6.x for more information about determining the wattage of outdoor luminaires.~~

~~The total allowed lighting power is the combined total of all of the allowed lighting power layers. There are lighting power allowances for general hardscape lighting and lighting power allowances for specific applications. Some applications may also qualify for additional lighting power allowances for a local ordinance.~~

~~An outdoor lighting installation complies with the lighting power requirements if the actual outdoor lighting power installed is no greater than the allowed outdoor lighting power calculated under §147(d). The allowed lighting power shall be the combined total of the sum of the general hardscape lighting allowance determined in accordance with Section 147(d)1, the sum of the additional lighting power allowance for specific applications determined in accordance with Section 147(d)2, and the sum of the additional lighting power allowances for local ordinance determined in accordance with Section 147(d)3.~~

DRAFT

6.5 General Hardscape Lighting Power Allowance

§147(d)1, Table 147-A

~~The Standards impose maximum lighting power limits for general site illumination. General site illumination includes those applications listed in Standards Table 147-A (see also the first column of **Error! Reference source not found.**). These include:~~

- ~~Hardscape for automotive motor vehicular use, including parking lots, driveways and site roadsroadways.~~
- ~~Hardscape for pedestrian use, including plazas, sidewalks, walkways and bikeways.~~
- ~~Building entrances (without canopy).~~
- ~~Outdoor sales lots.~~

Hardscape is defined in §101 as an improvement to a site that is paved and has other structural features, including but not limited to, curbs, plazas, entries, parking lots, site roadways, driveways, walkways, sidewalks, bikeways, water features and pools, storage or service yards, loading docks, amphitheaters, outdoor sales lots, and private monuments and statuary.

~~A single lighting budget may be determined for all of these applications together and tradeoffs may be made between the general site illumination applications. Other outdoor lighting applications are considered *specific applications* as opposed to *general site illumination*. No tradeoffs may be made among or between specific applications.~~

~~The allowed lighting power for general site illumination is calculated by determiningas the area or length of each lighting application and multiplying this area or length times the lighting power allowance, which is expressed either in W/ft² or W/ft, respectively. The area for general illumination of the site may not include areas for specific applications.~~

The allowed lighting power for general hardscape lighting is calculated as the sum of three distinct items~~.~~ as follows:

(a) The first is the Area Wattage Allowance (AWA), which is the area of the illuminated hardscape, and is expressed in W/ ft².

(b) The second is Linear Wattage Allowance (LWA), which is the length of the perimeter of the illuminated hardscape, and is expressed in watts per linear foot.

(c) The third is the Initial Wattage Allowance (IWA), which is a flat allowance for each property, and is expressed in watts.

To determine the total allowed power for general hardscape lighting, add the AWA + LWA + IWA. The AWA, LWA, and IWA are described below.

6.5.1 General Hardscape Power Trade-Offs

Allowed lighting power determined according to §147(d)1 for general hardscape lighting may be traded to specific applications in §147(d)2, provided the hardscape area from which the lighting power is traded continues to be illuminated in accordance with §147(d)1A. This means that if luminaires used originally to determine the total hardscape illuminated area are not installed, then the general hardscape lighting power allowance must also be reduced accordingly, and will not be available to trade-off. However, if the illuminated area remains the same, but luminaire wattage is reduced, then unused allowed lighting power may be traded-off.

6.5.2 Area Wattage Allowances (AWA)

The Area Wattage Allowance (AWA) is the total illuminated hardscape area that is included in the project times the AWA listed in Table 147-A. Multiply the illuminated hardscape area by the AWA from Table 147-A for the appropriate Lighting Zone.

The area for the AWA includes all illuminated hardscape, regardless of whether the area will have an additional lighting power allowances for Specific Applications from the Standards Table 147-B.

~~The actual lighting power of outdoor lighting is the total watts of all lighting systems (including ballast or transformer loss). See §147(b).~~

6.5.3 Linear Wattage Allowances (LWA)

The Linear Wattage Allowance (LWA) is the total hardscape perimeter length that is included in the project times the LWA listed in Table 147-A. Multiply the total hardscape perimeter length by the LWA from Table 147-A for the appropriate Lighting Zone.

The total hardscape perimeter is the length of the actual perimeter of the illuminated hardscape on the property, with specific perimeter additions for building and other area exclusions that have been removed from the AWA calculation above. Generally, if there is an enclosed exclusion in the area AWA calculation, the perimeter may be included in the LWA calculation.

The total hardscape perimeter shall not include portions of hardscape that is not illuminated according to §147(d)1A. The perimeter length for hardscape around landscaped areas and permanent planters shall be determined as follows:

(a) Landscaped areas completely enclosed within the hardscape area, and which have width or length less than ten feet wide, shall not be added to the hardscape perimeter length.

(b) Landscaped areas completely enclosed within the hardscape area, and which width or length are a minimum of ten feet wide, the perimeter of the landscaped areas or permanent planter shall be added to the hardscape perimeter length.

(c) Landscaped edges that are not abutting the hardscape shall not be added to the hardscape perimeter length.

6.5.4 Initial Wattage Allowances (IWA)

The Initial Wattage Allowance (IWA) is allowed to be used one time per site. The purposed of the IWA is to provide additional watts for small sites, or for odd hardscape geometries. Add the IWA from Table 147-A for the appropriate Lighting Zone.

DRAFT

Table 147-A General Hardscape Lighting Power Allowance

Type of Power Allowance	Lighting Zone 1	Lighting Zone 2	Lighting Zone 3	Lighting Zone 4
Area Wattage Allowance (AWA)	0.036 W/ft^2	0.045 W/ft^2	0.092 W/ft^2	0.115 W/ft^2
Linear Wattage Allowance (LWA)	0.36 W/lf	0.45 W/lf	0.92 W/lf	1.15 W/lf
Initial Wattage Allowance (IWA)	340 W	510 W	770 W	1030 W

Example 6-13

Question

In a parking lot in front of a retail store, we are not using the maximum lighting power allowance for the parking lot. Can we use the remaining allowance to illuminate the building entrance and the walkways near the store to a higher level?

Answer

Yes, you may use the unused portion of the power allowance in the parking lot to increase the illumination levels for other ~~general site illumination~~ lighting applications ~~in Standards Table 147-A~~, including building entrance ~~without canopies~~ and walkway areas. ~~However, this tradeoff is not allowed for lighting applications included in Standards Table 147-B.~~

Example 6-14

Question

Lighting for stairs is exempt from the requirements of §147, so is a pole-mounted luminaire that is located at the stairs considered exempt, even though some of the light serves hardscape areas that are not exempt?

Answer

In this example, the luminaire is not regulated by the Standards if the primary purpose for that luminaire is to illuminate the stairs (or other unregulated areas), and majority of light coming from a luminaire falls on stairs. However, the luminaire is regulated by the Standards if majority of the light coming from the luminaire falls on regulated areas, such as hardscape areas. For example, if the luminaire is equipped with optics that directs more than 50% of the light towards the stairs, then the luminaire may be considered stair lighting and therefore exempt. Conversely, the luminaire must be considered hardscape lighting if the lack of proper optical controls results in more than 50% of the light fall on the adjacent hardscape areas. ~~Each luminaire on a site plan must be assigned only one area. It is not the intent of the Standards to assign the wattage of any single outdoor luminaire to more than one area~~

~~Example **Error! No text of specified style in document.** 3~~

~~Question~~

~~A 300 ft long 15 ft wide roadway leads through a wooded area to a hotel entrance in Lighting Zone 2, and the owner wants to light the roadway with luminaires mounted at a height of 20 ft. What is the allowed lighting power for this roadway?~~

~~Answer~~

~~Lighting power for the roadway may be calculated in one of two ways: based on an allowance of 0.08 W/ft² times the area of the pavement plus 5 ft on each side or based on the length of the roadway times 1.5 W/ft. Using the first method, the allowance is the area of 7,500 ft² (300 ft x 25 ft) times the allowance of 0.08 W/ft² or 600 watts. Using the linear foot method, the allowance is 300 ft of length times the allowance of 1.5 W/ft or 450 watts. In this instance, the area method results in a larger lighting power allowance, but this depends on the width of the proposed paved area. A simple calculation (1.5 W/ft ÷ 0.08 W/ft² = 18.75 ft) tells us that the linear foot method will result in more lighting power as long as the width of the roadway (including the 5 ft band on each side) is less than 18.75 ft. In Lighting Zone 3, the breakeven width is 26.67 ft (4.0 W/ft ÷ 0.15 W/ft²).~~

~~If the roadway were located along the property line, then the additional 5 ft band may not be added on the side adjacent to the property line, e.g. the 5 ft band may not extend onto neighboring property.~~

DRAFT

~~Also, the 600 watts calculated above is the maximum power that is allowed and is based on the assumption that the luminaires are spaced in such a way that the entire roadway is illuminated. With the proposed 20 ft mounting height, as long as the luminaires are spaced closer than 120 ft (6 x 20 ft) apart along the roadway, the entire surface may be considered to be illuminated.~~

DRAFT

~~Example 6-15~~

~~Question~~

~~The parking lot illustrated below has two luminaires that are mounted at a height of 25 ft. What is the illuminated hardscape area of general site illumination and what is the allowed lighting power? The lot is located in Lighting Zone 3.~~

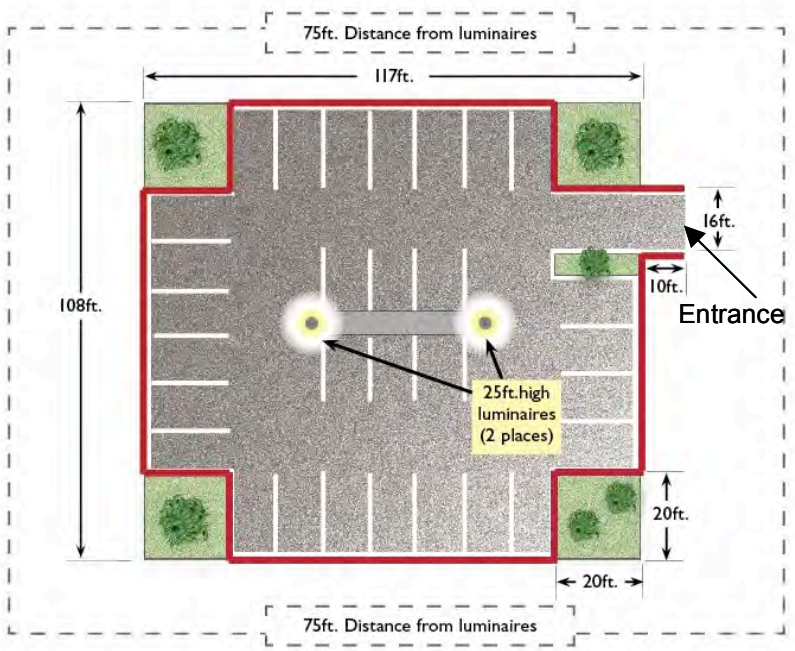

~~Illuminated Area~~

~~108' x 117' = 12,636 ft2~~

~~Plus the driveway~~

~~10' x 16' = 160 ft2~~

~~Minus the landscape cutouts~~

~~(20' x 20') x 4 = 1,600 ft2~~

~~=11,196 ft2~~

~~Plus 5 ft unpaved perimeter~~

~~470 linear ft x 5 ft = 2,305 ft2~~

~~Total Illuminated Area = **13,546 ft2**~~

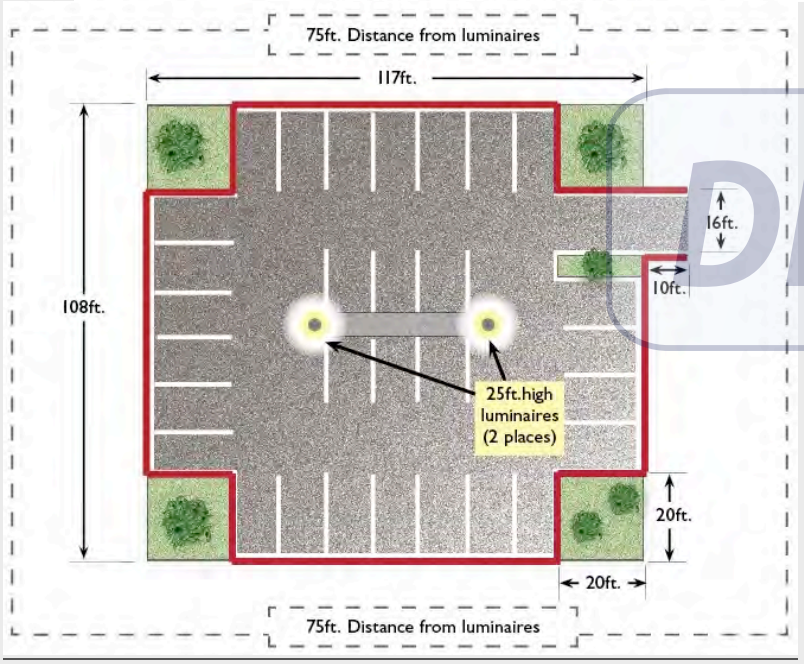

DRAFT

~~Answer~~

~~The two luminaires create a maximum illuminated area that extends 75 ft (3 x 25 ft) in all four directions. The boundary of the maximum illuminated area extends beyond the edges of the parking lot as well as the entrance drive so the entire paved area is considered illuminated. The landscaped island below the entrance driveway is less than 10 ft wide, so it too is included as part of the illuminated area. The landscaped cutouts (20 x 20 ft) in the corners of the parking lot are bound by pavement on only two sides so they are not included. There is an allowance to use the actual paved area plus a 5 foot perimeter of adjacent unpaved land. Once the illuminated paved area is identified, there are a number of ways to do the geometry. One way to calculate the illuminated area is shown in the text box above. Please note that the 5 foot unpaved perimeter follows the contour of the paved areas of the parking lot, and does not include area beyond the property line (to the right of the driveway).~~

~~Example **Error! No text of specified style in document.** 5~~

~~Question~~

~~In the parking lot layout shown above, what would the illuminated area be and what would the maximum allowed lighting power be if the two luminaires were mounted at a height of 15 feet and the two poles were placed 30 feet apart?~~

~~Answer~~

~~If the mounting height is reduced to 15 ft, then the entire paved area from right to left is illuminated (45 feet to the right plus the distance between the poles [assumed to be 1/3 of 117 feet, or around 40 feet] plus 45 feet to the left). However, the top 9 feet and bottom 9 feet of the paved parking lot area must be excluded from the illuminated area of the parking lot.~~

~~6.1.1 Illuminated Area (AWA calculation) and Perimeter (LWA calculation)~~

~~The area of the lighting application may not include any areas on the site that are not illuminated. An area is considered illuminated if it is located within threefive mounting heights of the nearest luminaire. With indoor lighting applications, the entire floor area is considered to be illuminated for the purpose of determining the allowed lighting power. However, for outdoor lighting applications, the number of luminaires, their mounting heights and their layout affect the illuminated area and therefore the allowed lighting power.~~

~~In plan view of the site, the illuminated area is defined as any hardscape area within a square pattern around each luminaire or pole that is sixten times the luminaire mounting height, with the luminaire in the middle of the pattern, less any area that is within a building, under a canopy, beyond property lines, or obstructed by a sign or structure.~~

~~i. The illuminated area may include the actual paved area plus 5 ft on either side of the centerline path of travel. The lighting power allowance with this method is watts per ft^2.~~

~~ii. A 25 ft wide area running along the axis of the path of travel and including as much of the paved area of the site roadway, driveway, sidewalk, walkway or~~

DRAFT

~~bikeway as possible. Any overlapping area of another lighting application must be subtracted from the area of the other lighting application. In this case the allowed lighting power is the length of the centerline of the path times the allowed power per unit length. The lighting power allowances are shown as watts per linear foot in Standards Table 147-A for this calculation method.~~

~~With either of the above methods, the illuminated area may not extend beyond the property line.~~

6.6 Additional Lighting Power Allowance for Specific Applications

§147(d)2, Table 147-B

~~Determine the appropriate lighting application from Standards Table 147-A for each portion of general site illumination. Multiply the allowed area, or length if using hardscape method (ii), of each lighting application by the allowed lighting power density from Standards Table 147-A.~~

The lighting power for Specific Applications provides additional lighting power that can be layered in addition to the General Hardscape lighting power allowances as applicable.

Most of a site will be classified as 'General Hardscape' and will be calculated using Table 147-A as the only source of allowance.

Some portions of the site may fit use categories that permit the addition of another lighting allowance for that portion of the site. These Specific Applications are detailed in Table 147-B. Not all of these allowances are based on area.

The single exception to this is the allowance for Hardscape Ornamental Lighting, which is calculated independent of the rest of the Specific Applications, and no regard to the overlap of this Application is made. See section 6.6.4 for more information about the ornamental lighting allowance.

~~Each portion of the illuminated area must be assigned to only one lighting application, and the a~~Assigned lighting applications must be consistent with the actual use of the area. Outdoor lighting definitions in §101 must be used to determine appropriate lighting applications. ~~. Any specific lighting applications (listed in Standards Table 147-B) are excluded from the general site illumination.~~

Special Applications that are based on specific instances on the site are the cumulative total of those instances on the site, with the allowance being accumulated per instance.

Special Applications that are based on the length of an instance on the site are calculated as the product of the total length of the instance and the allowance per linear foot for the Application.

DRAFT

6.6.1 Specific Allowances Power Trade-Offs

Allowed lighting power for specific applications shall not be traded between specific applications, or to hardscape lighting in §147(d)1. This means that for each and every specific application, the allowed lighting power is the smaller of the allowed power determined for that specific application according to §147(d)2, or the actual installed lighting power that is used in that specific application.

6.6.2 Wattage Allowance per Application (watts)

The applications in this category are provided with additional lighting power, in watts per instance, as defined in Table 147-B. Use all that apply as appropriate. Wattage allowances per application are available for the following areas:

1. Building Entrances or Exits.
2. Primary Entrances of Senior Care Facilities, Police Stations, Hospitals, Fire Stations, and Emergency Vehicle Facilities.
3. Drive-Up Windows. See Section 6.6.6.6 for additional information about drive-up windows
4. Vehicle Service Station Uncovered Fuel Dispenser. See Section 6.6.6.3 for additional information about vehicle service stations.

6.6.3 Wattage Allowance per Unit Length (w/linear ft).

The wattage allowance per linear foot is available only for outdoor sales frontage immediately adjacent to the principal viewing location(s) and unobstructed for its viewing length. A corner sales lot may include two adjacent sides provided that a different principal viewing location exists for each side. Luminaires qualifying for this allowance shall be located between the principal viewing location and the frontage outdoor. The outdoor sales frontage allowance is calculated as the product of the total length of qualifying sales frontage times the outdoor sales frontage lighting allowance in Table 147-B. See Section 6.6.6.2 for additional information about sales frontage.

DRAFT

6.6.4 Wattage Allowance per Hardscape Area (W/ft2).

The ornamental lighting allowance on the site is calculated as the product of the total illuminated hardscape for the site times the hardscape ornamental lighting allowance in Table 147-B. Luminaires qualifying for this allowance shall be rated for 100 watts or less as determined in accordance with §130(d), and shall be post-top luminaires, lanterns, pendant luminaires, or chandeliers in accordance with Table 147-B. This additional wattage allowance may be used for any illuminated hardscape area on the site. See Section 6.6.6.5 for additional information about ornamental lighting.

6.6.5 Wattage Allowance per Specific Area (W/ft2).

Applications in this category are provided with additional lighting power, in watts per instance, as defined in Table 147-B. Wattage allowances per specific area are available for the following areas:

A. Building Facades. Only areas of building façade that are illuminated shall qualify for this allowance. Luminaires qualifying for this allowance shall be aimed at the façade and shall be capable of illuminating it without obstruction or interference by permanent building features or other objects. See Section 6.6.6.1 for additional information about building facades.

B. Outdoor Sales Lots. Allowance for uncovered sales lots used exclusively for the display of vehicles or other merchandise for sale. Driveways, parking lots or other non sales areas shall be considered hardscape areas, not outdoor sales lots, even if these areas are completely surrounded by sales lot on all sides. Luminaires qualifying for this allowance shall be within 5 mounting heights of the sales lot area.

C. Vehicle Service Station Hardscape. Allowance for the total illuminated hardscape area less area of buildings, under canopies, off property, or obstructed by signs or structures. Luminaires qualifying for this allowance shall be illuminating the hardscape area and shall not be within a building, below a canopy, beyond property lines, or obstructed by a sign or other structure. See Section 6.6.6.3 for additional information about vehicle service stations.

D. Vehicle Service Station Canopies Allowance for the total area within the drip line of the canopy. Luminaires qualifying for this allowance shall be located under the canopy. See Section 6.6.6.3 for additional information about vehicle service stations.

E. Sales Canopies Allowance for the total area within the drip line of the canopy. Luminaires qualifying for this allowance shall be located under the canopy. See Section 6.6.6.4 for additional information about lighting under canopies.

F. Non-sales Canopies. Allowance for the total area within the drip line of the canopy. Luminaires qualifying for this allowance shall be located under the canopy. See Section 6.6.6.4 for additional information about lighting under canopies.

G. Guard Stations. Allowance up to 1,000 square feet per vehicle lane. Guard stations provide access to secure areas controlled by security personnel who stop and may inspect vehicles and vehicle occupants, including identification, documentation, vehicle license plates, and vehicle contents. Qualifying luminaires shall be within 2 mounting heights of a vehicle lane or the guardhouse. See Section 6.6.6.7 for additional information about guarded facilities.

H. Student Pick-up/Drop-off zone. Allowance for the area of the student pickup/drop-off zone, with or without canopy, for preschool through 12th grade school campuses. A student pick-up/drop off zone is a curbside, controlled traffic area on a school campus where students are picked-up and dropped off from vehicles. The allowed area shall be the smaller of the

DRAFT

actual width or 25 feet, times the smaller of the actual length or 250 feet. Qualifying luminaires shall be within 2 mounting heights of the student pick-up/drop-off zone.

I. Outdoor Dining. Allowance for the total illuminated hardscape of outdoor dining. Outdoor dining areas are hardscape areas used to serve and consume food and beverages. Qualifying luminaires shall be within 2 mounting heights of the hardscape area of outdoor dining.

J. Special Security Lighting for Retail Parking and Pedestrian Hardscape. This additional allowance is for illuminated retail parking and pedestrian hardscape identified as having special security needs. This allowance shall be in addition to the building entrance or exit allowance.

6.6.6 Further Discussion about Additional Lighting Power Allowance for Specific Applications

6.6.6.1 Building Facades

§147(c)2.A.

Building façade is defined in §101 as the exterior surfaces of a building, not including horizontal roofing, signs, and surfaces not visible from any reasonable viewing location. Only areas of building façade that are illuminated shall qualify for this allowance. Luminaires qualifying for this allowance shall be aimed at the façade and shall be capable of illuminating it without obstruction or interference by permanent building features or other objects.

Building facades and architectural features may be illuminated by flood lights, sconces or other lighting attached to the building. Building façade lighting is not permitted in Lighting Zone 1. Façade orientations that are not illuminated and façade areas that are not illuminated because the lighting is obstructed shall not be included. General site illumination, sign lighting, and/or lighting for other specific applications can be attached to the side of a building and not be considered façade lighting. However, every luminaire must be assigned to only one specific lighting application. Unshielded wallpacks mounted on sides of the buildings are not considered façade lighting, since most of the light exiting these fixtures lands on areas other than the building façade.

DRAFT

Courtesy of Horton Lees Brogden Lighting Design, Inc of San Francisco
Photographer: Jay Graham

Figure 6-[illegible] – Façade Lighting

DRAFT

Example 6-16

Question

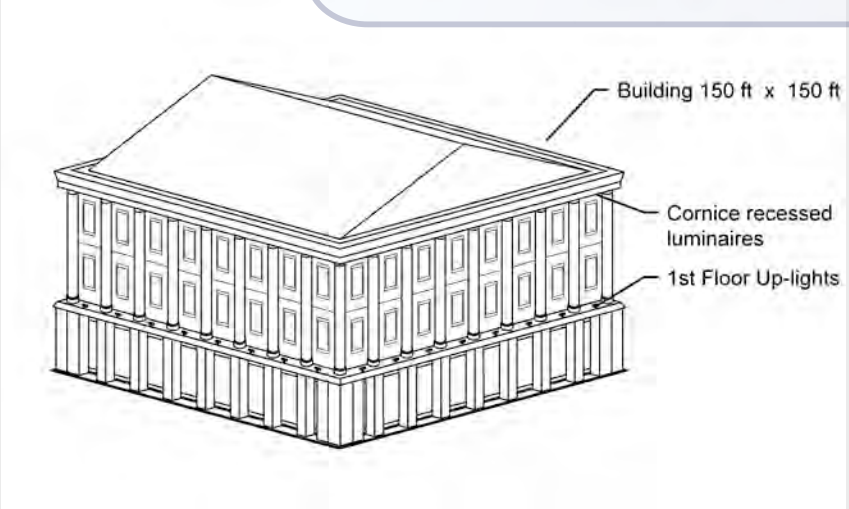

(Lighting Zone 3) wants to illuminate its city hall on two sides. The structure is a three-story building with a colonnade on the second and third floors and a cornice above. The columns are considered important architectural features and the principal goal of the lighting job is to highlight these features. The columns are 30 ft tall x 3 ft in diameter and are spaced at 8 ft. For the purposes of determining the lighting power allowance for the building, what is the surface area to be

illuminated? What is the lighting power allowance? The columns will be illuminated by downlights at the cornice and uplights above the first floor.

Answer

The area of the façade for the purposes of calculating the lighting allowance is the projected area of the illuminated façade. Architectural features such as columns, recesses, facets, etc. are ignored. The illuminated area is therefore 30 ft x 150 ft or 4,500 ft². The façade allowance for Lighting Zone 3 is 0.35 W/ft², so the total power allowed is 1,575 watts.

Example 6-17

Question

I am designing a high-rise building and permanently mounted marquee like lights will be installed along the corners of the building. The lights will be turned on at night, but only for the holiday season, roughly between mid-November and mid-January. The lights consist of a series of 9 watt compact fluorescent luminaires spaced at 12 in. on-center (OC) along all the corners of the building and along the top of the building. Essentially, the lights provide an outline of the building. For the purposes of the outdoor lighting Standards, are these considered façade lighting? Since they will only be used for about two months of the year, are they considered temporary lighting and exempt?

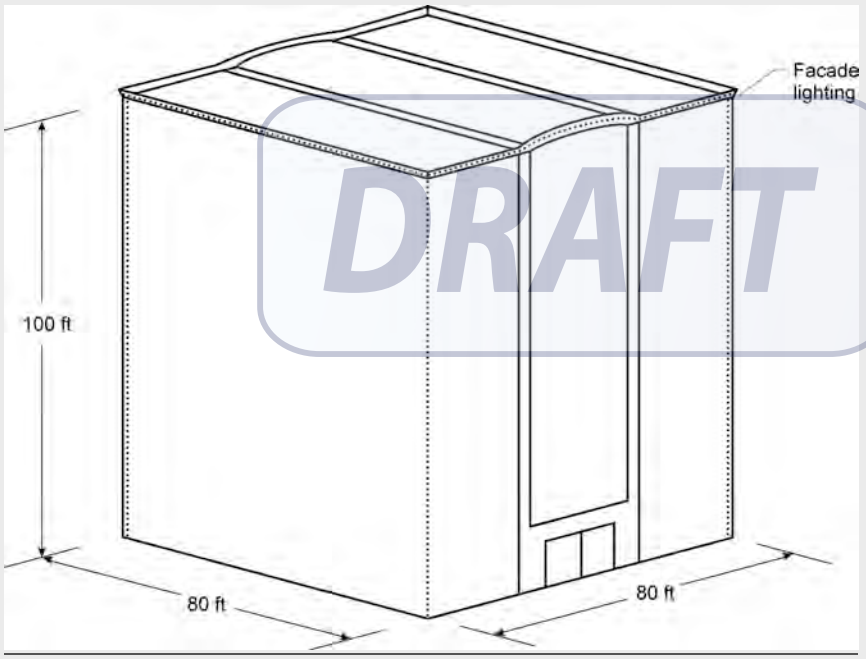

Answer

The lighting is permanent lighting and must comply with the Standards. Temporary lighting is defined in §101 as is a lighting installation with plug-in connections that does not persist beyond 60 consecutive days or more than 120 days per year. Anything that is permanently mounted to the building is considered permanent lighting, and the hours of intended use do not affect its status as permanent lighting.

Since this lighting is primarily used to accent the architectural outline of the building, it may be considered façade lighting. And since all corners of the building are illuminated, all four facades may be considered to be illuminated. The area on each façade is 80 ft x 100 ft or 8,000 ft². The total

illuminated area is four times 8,000 ft² or 32,000 ft². The Lighting Zone 3 allowance for façade lighting is 0.35 W/ft² and the total power allowance for façade lighting is 11,200 watts.

There are 100 ft x 4 plus 80 ft x 4 lamps (a total of 720 lamps) on the building. Each lamp is 13 watts (including the ballast). This data is taken from Appendix NB of the Nonresidential ACM Manual. The installed power is 720 lamps times 13 W/lamp or 9,360 watts. The installed power is less than the allowance so the façade lighting complies. If this building were in Lighting Zone 2, the allowance would be 0.18 W/ft² or a total of 5,760 watts. The lighting design would not comply in Lighting Zone 2.

Example 6-18

Question

In the example above, if only the front corners the building are illuminated, which façade area should be the basis of the allowed lighting calculations?

Answer

Since the corners are at the intersection of two facades (for example, the front and right facades), only one or the other facades areas (but not both) may be used to calculate the power allowance.

Example 6-19

Question

Portions of the front façade of a proposed wholesale store in Lighting Zone 3 are going to be illuminated. The front wall dimensions are 120 ft by 20 ft. There is 250 ft^2 of fenestration in the front wall that is illuminated by the façade lighting. Signs cover another 500 ft^2 of the front wall, and another 400 ft^2 is not illuminated at all. What is the allowed front façade lighting power?

Answer

The gross wall area is 2,400 ft^2 (120x20). However we must subtract all those areas that are not illuminated. Please note that since the 250 ft^2 of fenestration is intended to be illuminated by the façade lighting, this area may be included in the total area eligible for power calculations. The areas not eligible for power calculations include:

500 ft² of signs + 400 ft² of unlighted façade = 900 ft²

Net wall area used for façade lighting: 2,400 ft² – 900 ft² = 1,500 ft²

From Table 147-B, the allowed façade lighting power density in Lighting Zone 3 is 0.35 W/ft²

The calculated allowed power based on net wall area is 1,500 ft² x 0.35 W/ft² = 525 watts.

The allowed power is therefore the smaller of actual façade lighting power or 525 watts.

Example 6-20

Question

Is sign lighting part of my façade lighting?

Answer

If lighting is used only to illuminate a sign then that lighting is not part of the façade lighting. However, the sign area must be subtracted from the façade area so that the area is not double counted. The sign lighting must meet the requirements of the Standards for sign energy efficiency or allowed power.

DRAFT

Example 6-21

Question

Is the lighting of my parapet wall with small wattage lamps decorative lighting considered ornamental or façade lighting?

Answer

Small wattage lamps attached to a building façade is considered façade lighting. Ornamental lighting is defined in Standards as post-top luminaires, lanterns, pendant luminaires, chandeliers, and marquee lighting, which are rated for 100 watts or less as determined in accordance with §130(d).

Example 6-22

Question

If I mount a luminaire on the side of my building to illuminate an area is it considered façade lighting or hardscape lighting?

Answer

It depends on the primary intent of the luminaire. For example, if the luminaire is primarily illuminating the walls (such as a sconce), then it should be considered part of the building façade lighting. If on the other hand, the luminaire is primarily illuminating the parking lot beyond (most wall packs), then it should be part of the hardscape lighting. It should be noted that lighting power tradeoffs are not allowed between building façade and hardscape areas, which means you cannot use both allowances for the same luminaire.

DRAFT

6.6.6.2 Sales Frontage

§147(c)2.B.

This additional allowance is intended to accommodate the retailers need to highlight merchandise to motorists who drive by their lot. Outdoor sales frontage includes car lots, but can also include any sales activity.

Outdoor sales frontage must be immediately adjacent to the principal viewing location(s) and unobstructed for its viewing length. A corner sales lot may include two adjacent sides provided that a different principal viewing location exists for each side. Luminaires qualifying for this allowance shall be located between the principal viewing location and the frontage outdoor. The outdoor sales frontage allowance is calculated as the product of the total length of qualifying sales frontage times the outdoor sales frontage lighting allowance in Table 147-B.

When a sales lot qualifies for the sales frontage allowance, the total sales lot wattage allowance is determined by adding the following three layers

a) General hardscape lighting power allowance

b) Outdoor sales frontage

c) Outdoor sales lot

6.6.6.3 Vehicle Service Stations

§147(c)2.F.

According to the definition in §101, vehicle service station is a gasoline, natural gas, diesel, or other fuel dispensing station. In addition to allowances for building entrances and exits, hardscape ornamental lighting, building façade, and outdoor dining allowances, as appropriate; the total wattage allowance specifically applying to vehicle service station hardscape is determined by adding the following layers, as appropriate:

a) General hardscape lighting power allowance

b) Vehicle service station uncovered fuel dispenser (allowance per fuelling dispenser, with 2 mounting heights of dispenser)

c) Vehicle service station hardscape (less area of buildings, under canopies, off property, or obstructed by signs or other structures)

d) Vehicle service station canopies (within the drip line of the canopy)

The lighting power allowances are listed in Standards Table 147-B.

Source: AEC Photographer: Tom Bergstrom

DRAFT

Source: AEC Photographer: Tom Bergstrom

Figure 6-4 Service Station Hardscape Areas

Example 6-23

Question

Where does canopy lighting area end and hardscape area start?

Answer

Plan view of the horizontal projection of the canopy on the ground establishes the area for under canopy lighting power calculations. This area also referred to as the "drip line" of the canopy. All hardscape areas beyond drip line are considered to be service station hardscape areas.

DRAFT

6.6.6.4 Under Canopies

§147(c)2.D.

According to the definition in §101, a canopy is a permanent structure, other than a parking garage, consisting of a roof and supporting building elements, with the area beneath at least partially open to the elements. A canopy may be freestanding or attached to surrounding structures. A canopy roof may serve as the floor of a structure above.

The definition of a canopy states that a canopy is not a parking garage. A parking garage is defined in §101 as a covered building or structure for the purpose of parking vehicles, which consists of at least a roof over the parking area enclosed with walls on all sides. Parking garages may have fences, rails, partial walls, or other barriers in place of one or more walls. The structure has an entrance(s) and exit(s), and includes areas for vehicle maneuvering to reach the parking spaces.

The lighting power allowance for a canopy depends on its purpose. Service station canopies are treated separately (see the previous section). The two types of canopies addressed in this section are those that are used for sales and those that are not. Non-sales canopies include covered entrances to hotels, office buildings, convention centers and other buildings. Sales canopies specifically cover and protect an outdoor sales area, including garden centers, covered automobile sales lots, and outdoor markets with permanent roofs. The lighting power allowances are listed in Standards Table 147-B.

The area of a canopy is defined as the horizontal projected area, in plan view, directly underneath the canopy. This area is also referred to as the "drip line" of the canopy. Canopy lighting, either sales or non-sales shall comply separately, e.g. trade-offs are not permitted between other specific lighting applications or with general site illumination.

General site lighting or other specific applications lighting, and/or sign lighting that are attached to the sides or top of a canopy, cannot be considered canopy lighting. Every luminaire shall be assigned to only one or the other application. For example, internally illuminated translucent panels on the perimeter of a canopy are considered Sign lighting, while the lighting underneath the canopy and directed towards the ground is canopy lighting.

Source: AEC Photographer: Tom Bergstrom

Figure 6-5 – Canopy Lighting

DRAFT

Example 6-24

Question

The first floor of an office tower in Lighting Zone 3 is setback 20 ft on the street side. The width of the recessed façade is 150 ft. The primary purpose of the setback (and canopy) is to provide a suitable entrance to the office tower; however, space under the canopy is leased as newsstand, a flower cart and a shoeshine stand. These commercial activities occupy about half of the space beneath the canopy. What is the allowed lighting power?

Answer

The total canopy area is 20 ft x 150 ft or 3,000 ft². The General hardscape allowance for the site will need to be separately determined. The canopy allowance is an additional layer allowed only for the canopy area. The 1,500 ft² used for the flower cart, newsstand and shoeshine stand is considered a sales canopy and the allowance is 0.098 W/ft² or a total of 1,362 watts. The other 1,500 ft² is a non-sales canopy and the allowance is 0.408 W/ft² or a total of 612 watts. Tradeoffs are not permitted between the sales portion and the non-sales portions.

6.6.6.5 Ornamental Lighting

§147(c)2.C.

Ornamental lighting is defined in §101 as post-top luminaires, lanterns, pendant luminaires, chandeliers, and marquee lighting. The allowances for ornamental lighting are listed in Standards Table 147-B.

The ornamental lighting allowance on the site is calculated as the product of the total illuminated hardscape for the site times the hardscape ornamental lighting allowance in Table 147-B. This allowance is calculated separately, and is not accumulated into the other allowances. This additional wattage allowance may be used for any illuminated hardscape area on the site.

Luminaires used for ornamental lighting shall have a rated wattage, as listed on a permanent, pre-printed, factory-installed label, of 100 watts or less.

Source: Ted Walson Photographer

Figure – Ornamental Lighting

Example 6-25

Question

Are bollard luminaires considered ornamental lighting?

Answer

No, Ornamental lighting is defined in Standards as post-top luminaires, lanterns, pendant luminaires, chandeliers, and marquee lighting. Bollard luminaires are used for general illumination and ornamental lighting in not used for general illumination.

DRAFT

Example 6-26

Question

An entrance canopy to a hotel in Lighting Zone 3 has marquee lighting around the perimeter and the outside edge of the canopy. The total site hardscape area is 10,000 square feet. Additional downlights are mounted on the underside of the entry canopy. Is the marquee lighting considered ornamental lighting? How much lighting power is permitted?

Answer

The marquee lighting is considered ornamental lighting. The downlights are not considered ornamental lighting. The hardscape ornamental lighting allowance for Lighting Zone 3 is 0.04 W/ft² of hardscape. The total hardscape ornamental lighting for the entire site cannot exceed 10,000 times 0.04 = 400 watts.

6.6.6.6 Drive-up Windows

§147(c)2.G.

Drive-up windows are common for fast food restaurants, banks, and parking lot entrances. In order to qualify, a drive-up window must have someone working behind the "window". Automatic ticket dispensers at parking lots do not count.

The lighting power allowances are listed in Standards Table 147-B as a wattage allowance per application.

The wattage allowance in Lighting Zone 3 is 125 watts for each drive-up window.

Luminaires qualifying for this allowance must be within 2 mounting heights of the sill of the window.

Luminaires qualifying for this allowance shall not be used to determine allowed lighting power for general illumination. Drive-up windows shall comply on their own; tradeoffs are not permitted with other specific lighting applications or with general site illumination. Luminaires qualifying for this allowance cannot be used to determine allowed lighting power for general illumination; for example, this allowance cannot be used for general parking lot illumination.

Source: AEC Photographer: Tom Bergstrom

DRAFT

Figure 6-7 – Drive-up Windows

Example 6-27

Question

A drive-up window in Lighting Zone 2 has width of seven ft. What is the allowed lighting power for this drive-up window?

Answer

The width of a drive-up window in not used for determining the allowed wattage. In Lighting Zone 2, 75 watts is allowed for each drive-up window.

6.6.6.7 Guarded Facilities

Guarded facilities, including gated communities, include the entrance driveway, gatehouse, and guardhouse interior areas that provide access to secure areas controlled by security personnel who stop and may inspect vehicles and vehicle occupants including, identification documentation, vehicle license plates, and vehicle contents.

There is an allowance of up to 1,000 square feet per vehicle lane. Qualifying luminaires shall be within 2 mounting heights of a vehicle lane or the guardhouse.

The power allowance for guarded facilities are listed in Standards Table 147-B.

Example 6-28

Question

A guard station to the research campus of a defense contractor consists of a heated and cooled guard station of 300 ft². Vehicles enter to the right of the station and exit to the left. What is the power allowance? The guard station is located in Lighting Zone 2.

Answer

Since the guard station is air conditioned, it must meet the requirements of indoor conditioned buildings, including HVAC, building envelope, and lighting requirements. The indoor power allowance is determined from the Area Category Method; Table 146-C, General Commercial and Industrial Work). The allowance for the driveway is based on 1,000 ft² per vehicle lane. Assuming there are two lanes, the allowance for Lighting Zone 2 is 2,000 times 0.355 W/ft^2 is 700 watts, in addition to the general hardscape lighting power allowance.

DRAFT

Example 6-29

Question

Is the guarded facility at the entrance to a residential gated community covered by the Standards?

Answer

Yes, residential guarded facilities are covered by the Standards.

Table 147-B Additional Lighting Power Allowance For Specific Applications

All area and distance measurements in plan view unless otherwise noted.

Lighting Application	Lighting Zone 1	Lighting Zone 2	Lighting Zone 3	Lighting Zone 4
WATTAGE ALLOWANCE PER APPLICATION. Use all that apply as appropriate.				
Building Entrances or Exits. Allowance per door. Luminaires qualifying for this allowance shall be within 20 feet of the door.	30 watts	75 watts	100 watts	120 watts
Primary Entrances, Senior Care Facilities, Police Stations, Hospitals, Fire Stations, and Emergency Vehicle Facilities. Allowance per primary entrance(s) only. Primary entrances shall provide access for the general public and shall not be used exclusively for staff or service personnel. This allowance shall be in addition to the building entrance or exit allowance above. Luminaires qualifying for this allowance shall be within 100 feet of the primary entrance.	45 watts	80 watts	120 watts	130 watts
Drive Up Windows. Allowance per customer service location. Luminaires qualifying for this allowance shall be within 2 mounting heights of the sill of the window.	40 watts	75 watts	125 watts	200 watts
Vehicle Service Station Uncovered Fuel Dispenser. Allowance per fueling dispenser. Luminaires qualifying for this allowance shall be within 2 mounting heights of the dispenser.	120 watts	175 watts	185 watts	330 watts
WATTAGE ALLOWANCE PER UNIT LENGTH (w/linear ft). May be used for one or two frontage side(s) per site.				
Outdoor Sales Frontage. Allowance for frontage immediately adjacent to the principal viewing location(s) and unobstructed for its viewing length. A corner sales lot may include two adjacent sides provided that a different principal viewing location exists for each side. Luminaires qualifying for this allowance shall be located between the principal viewing location and the frontage outdoor sales area.	No Allowance	22.5 W per linear ft	36 W per linear ft	45 W per linear ft
WATTAGE ALLOWANCE PER HARDSCAPE AREA (W/ft^2). May be used for any illuminated hardscape area on the site.				
Hardscape Ornamental Lighting. Allowance for the total site illuminated hardscape area. Luminaires qualifying for this allowance shall be rated for 100 watts or less as determined in accordance with Section 130(d), and shall be posttop luminaires, lanterns, pendant luminaires, or chandeliers.	No Allowance	0.02 W/ft^2	0.04 W/ft^2	0.06 W/ft^2
WATTAGE ALLOWANCE PER SPECIFIC AREA (W/ft^2). Use as appropriate provided that none of the following specific applications shall be used for the same area.				
Building Facades. Only areas of building façade that are illuminated shall qualify for this allowance. Luminaires qualifying for this	No Allowanc	0.18 W/ft^2	0.35 W/ft^2	0.50 W/ft^2

DRAFT

allowance shall be aimed at the façade and shall be capable of illuminating it without obstruction or interference by permanent building features or other objects.	e			
Outdoor Sales Lots. Allowance for uncovered sales lots used exclusively for the display of vehicles or other merchandise for sale. Driveways, parking lots or other non sales areas shall be considered hardscape areas even if these areas are completely surrounded by sales lot on all sides. Luminaires qualifying for this allowance shall be within 5 mounting heights of the sales lot area.	0.164 W/ft^2	0.555 W/ft^2	0.758 W/ft^2	1.285 W/ft^2
Vehicle Service Station Hardscape. Allowance for the total illuminated hardscape area less area of buildings, under canopies, off property, or obstructed by signs or structures. Luminaires qualifying for this allowance shall be illuminating the hardscape area and shall not be within a building, below a canopy, beyond property lines, or obstructed by a sign or other structure.	0.014 W/ft^2	0.155 W/ft^2	0.308 W/ft^2	0.485 W/ft^2
Vehicle Service Station Canopies Allowance for the total area within the drip line of the canopy. Luminaires qualifying for this allowance shall be located under the canopy.	0.514 W/ft^2	1.005 W/ft^2	1.358 W/ft^2	2.285 W/ft^2
Sales Canopies Allowance for the total area within the drip line of the canopy. Luminaires qualifying for this allowance shall be located under the canopy.	No Allowance	0.655 W/ft^2	0.908 W/ft^2	1.135 W/ft^2
Non-sales Canopies. Allowance for the total area within the drip line of the canopy. Luminaires qualifying for this allowance shall be located under the canopy.	0.084 W/ft^2	0.205 W/ft^2	0.408 W/ft^2	0.585 W/ft^2
Guard Stations. Allowance up to 1,000 square feet per vehicle lane. Guard stations provide access to secure areas controlled by security personnel who stop and may inspect vehicles and vehicle occupants, including identification, documentation, vehicle license plates, and vehicle contents. Qualifying luminaires shall be within 2 mounting heights of a vehicle lane or the guardhouse.	0.154 W/ft^2	0.355 W/ft^2	0.708 W/ft^2	0.985 W/ft^2
Student Pick-up/Drop-off zone. Allowance for the area of the student pickup/drop-off zone, with or without canopy, for preschool through 12th grade school campuses. A student pick-up/drop off zone is a curbside, controlled traffic area on a school campus where students are picked-up and dropped off from vehicles. The allowed area shall be the smaller of the actual width or 25 feet, times the smaller of the actual length or 250 feet. Qualifying luminaires shall be within 2 mounting heights of the student pick-up/drop-off zone.	No Allowance	0.12 W/ft^2	0.45 W/ft^2	No Allowance
Outdoor Dining. Allowance for the total illuminated hardscape of outdoor dining. Outdoor dining areas are hardscape areas used to serve	0.014 W/ft^2	0.135 W/ft^2	0.258 W/ft^2	0.435 W/ft^2

DRAFT

and consume food and beverages. Qualifying luminaires shall be within 2 mounting heights of the hardscape area of outdoor dining.				
Special Security Lighting for Retail Parking and Pedestrian Hardscape. This additional allowance is for illuminated retail parking and pedestrian hardscape identified as having special security needs. This allowance shall be in addition to the building entrance or exit allowance.	0.007 W/ft^2	0.009 W/ft^2	0.019 W/ft^2	No Allowance

6.7 Additional Lighting Power Allowance for Lighting Ordinance Requirements

§147(d)3, Table 147-C

The general ~~site~~ hardscape outdoor lighting power allowances permit lighting designs that deliver appropriate light levels as recommended by the Illuminating Engineering Society of North America (IESNA). In addition, the lighting power allowances are based on meeting IESNA recommendations for illumination quantity and quality and through the use of reasonably efficient sources and equipment that are readily available on the market. Minimum safety requirements have already been taken into consideration. Conservative assumptions were used in developing the Standards so, most often, it is possible to achieve illumination levels ~~considerably~~ higher than the minimums recommended by IESNA by simply using different performance parameters than were used to develop the lighting power allowances. ~~The different performance parameters could include a more efficacious lighting technology, like pulse-start metal halide lamps or high-pressure sodium lamps, and by using cutoff rather than full-cutoff luminaires.~~

DRAFT

6.7.1 Local Lighting Ordinance Allowances Power Trade-Offs

Allowed lighting power determined according to §147(d)3 for additional lighting power allowances for local ordinance shall not be traded to specific applications in §147(d)2 or to hardscape areas not covered by the local ordinance. These additional power allowances are “use-it or lose-it” allowances.

6.7.2 Additional Lighting Power

~~Adjustments For Local Ordinances~~

~~*Exception 1 to 147(c)1.B.*~~
~~*Table 147-C*~~

Additional lighting power allowances are available when higher light levels are required by law, through an officially adopted local ordinance by the authority having jurisdiction in accordance with §10-114. See section 6.3 for additional information about requirements for applying local lighting ordinances.

~~, and when the allowed lighting power density is inadequate to provide the required higher light levels using efficient lighting technologies (like pulse start metal halide, fluorescent T8 and T5 sources, or high pressure sodium lighting systems), then the allowed lighting power density specified in Table 147-C may be used to meet the higher light levels (See Exception 1 to §147(c)1.B.). This exception applies to general site illumination only and in particular to parking lots, site roadways, driveways, sidewalks, walkways, and bikeways. The higher value from Standards Tables 147-A or 147-C may be used for such applications.~~

~~The LPD values in Table 147-C are based on "average" footcandle levels. If the local ordinance calls for "minimum" footcandle levels, multiply the "average" footcandle levels by a factor of two. For example, if a local ordinance calls for "minimum" of one footcandle level, then instead of using the one footcandle level at 0.07 W/ft2, use two footcandle levels at 0.12 W/ft^2. If multiplying the "average" footcandle levels result in a value that is greater than four footcandles, simply extrapolate the 0.25 W/ft^2 value of the "average" four-footcandle level. For example, a "minimum" of three footcandles is equivalent to six "average" footcandles. Extrapolating for 0.25 W/ft^2 results in 0.38 W/ft^2.~~

The additional lighting power allowances for lighting ordinance requirements provides additional lighting power that can be layered in addition to the General Hardscape and Specific Application lighting power allowances as applicable.

For hardscape areas, including parking lots, site roadways, driveways, sidewalks, walkways or bikeways, when specific light levels are required by law through a local ordinance, and provided the local ordinance meets §10-114, additional lighting power for those hardscape areas covered by the local ordinance requirement shall be the smaller of the additional lighting allowances for local ordinance determined from Table 147-C for the appropriate lighting zone, or the actual installed lighting power meeting the requirements for the allowance.

DRAFT

Table 147- C Additional Lighting Power Allowance For Ordinance Requirements

ADDITIONAL LIGHTING POWER ALLOWANCE (W/ft2) WHEN AVERAGE LIGHT LEVELS ARE REQUIRED BY LOCAL ORDINANCE.				
Required (horizontal footcandles, AVERAGE)	Lighting Zone 1	Lighting Zone 2	Lighting Zone 3	Lighting Zone 4
0.5	0	0	0	0
1.0	0.004	0	0	0
1.5	0.024	0.015	0	0
2.0	0.044	0.035	0	0
3.0	0.084	0.075	0.028	0.005
4.0 or greater	0.124	0.115	0.068	0.045
ADDITIONAL LIGHTING POWER ALLOWANCE (W/ft2) WHEN MINIMUM LIGHT LEVELS ARE REQUIRED BY LOCAL ORDINANCE.				

Required (horizontal footcandles, MINIMUM)	Lighting Zone 1	Lighting Zone 2	Lighting Zone 3	Lighting Zone 4
0.5	0.004	0	0	0
1.0	0.044	0.035	0	0
1.5	0.124	0.115	0.068	0.045
2.0	0.164	0.155	0.108	0.085
3.0	0.164	0.155	0.108	0.085
4.0 or greater	0.164	0.155	0.108	0.085

~~*Table* **Error! No text of specified style in document.**-21 – Standards Table 147-C Required Light Levels by Law through a Local Ordinance~~

~~Required light levels by law through a local ordinance (horizontal foot-candles, average)~~	~~Allowed Lighting Power Density (W/ft²)~~
~~0.5~~	~~0.05~~
~~1.0~~	~~0.07~~
~~1.5~~	~~0.10~~
~~2.0~~	~~0.12~~
~~3.0~~	~~0.19~~
~~4.0 or greater~~	~~0.25~~

DRAFT

~~Example 6-30~~

~~Question~~

~~If the parking lot shown in the previous examples (with 25 ft mounting height) were in a jurisdiction that required a minimum of 2 footcandles of parking lot illumination, what would be the allowed lighting power?~~

~~Answer~~

~~Referring to Standards Table 147-C, the allowed lighting power density for 2 footcandles is 0.12 W/ft², which is lower than the 0.15 allowed for Lighting Zone 3, so no additional power would be permitted. However, if the local ordinance required an average of 3 footcandles, then the maximum lighting power density would be 0.19 W/ft² and lighting power could be increased to 0.19 W/ft² x 17,400 ft² or 3,306 watts.~~

~~Adjustments For Security~~

~~*Exception 2 to 147(c)1.B.*~~ ~~*Table 147-D*~~

~~In some situations higher lighting levels may be required because of special security requirements. Lighting power may be increased by values in Standards Table 147-D for security reasons in three cases:~~

- ~~For retail parking lots in Lighting Zones 1, 2, and 3, the lighting power allowance from Standards Table 147-A may be increased by 25% (multiply the value by 1.25).~~
- ~~For hardscape areas (plazas, pedestrian ways, parking, or roadways) within 100 ft of the entrance of senior housing facilities, the lighting power allowance from Standards Table 147-A may be increased by 25% (multiply the value by 1.25).~~
- ~~For parking lots and walkways within 60 ft of building entrances for law enforcement, fire, ambulance and emergency vehicle facilities, the lighting power allowance from Standards Table 147-A may be doubled (multiply the value by 2.0).~~

~~When the security adjustment is used, the areas affected shall be considered special applications and no tradeoffs are permitted. The area of security lighting is dropped from the area of general site illumination and it is treated as a special use-it-or-lose-it allowance. Luminaires that are used for this special security lighting shall not create illuminated area for the purpose of determining general site illumination.~~

DRAFT

~~*Table* **Error! No text of specified style in document.**~~*~~-3 – Standards Table 147-D Adjustments for Security~~*

~~Function Area~~	~~Multiplier~~
~~Retail parking lots in Lighting Zones 1, 2 and 3~~	~~1.25~~
~~Hardscape areas within 100 feet of the entrance of senior housing facilities in Lighting Zones 1, 2, and 3~~	~~1.25~~
~~Parking lots and walkways within 60 feet of entrances to the building for law enforcement, fire, ambulance and emergency vehicle facilities~~	~~2.0~~

Example 6~~**Error! No text of specified style in document.**~~-2~~7~~

~~Question~~

~~If the parking lot in the previous example served a retail store, what would be the lighting power allowance?~~

~~Answer~~

~~The 2,610 watts may be increased by 25% to 3,262 watts. This is calculated by multiplying the 2,610 watts by 1.25, which is taken from Standards Table 147-D.~~

Example 6-31

Question

What lighting power is permitted for the parking lot shown below? The site is located in Lighting Zone 3.

Answer

~~The 20 ft high luminaires create a maximum illuminated area (three mounting heights) that encompasses the entire lot, so the limits of the illuminated area are defined by the paved areas. The landscaped median in the center of the parking lot is more than 10 ft wide so it is not included in the parking lot area. The landscaped areas that are less than 10 ft wide are included as part of the illuminated area.~~

~~(100 ft x 140 ft) + (100 ft x 20 ft) – (40 ft x 60 ft) = 13,600 ft²~~

~~For Lighting Zone 3, the allowed lighting power is 0.15 W/ft² so the maximum power is 2,040 watts. Each of the four luminaires can be a maximum of about 500 watts.~~

Example 6-32

Question

A parking lot is illuminated from a series of cutoff wallpacks mounted on an adjacent building. The luminaires are mounted at a height of 15 ft above the ground and spaced 50 ft apart. How large is the illuminated area? What are the maximum rated watts that are permitted for each of the luminaires? The building is located in Lighting Zone 2.

Answer

~~The illuminated area extends a distance equal to 3 times the mounting height. The illuminated area therefore extends from the building a distance of 45 ft. The total illuminated area is 45 ft x 290 ft or 13,050 ft². The allowed lighting power in Lighting Zone 2 is 0.08 W/ft² so the maximum power is 1,044 watts. Each luminaire can have a maximum size of about 208 watts.~~

DRAFT

Example 6-33

Question

In the example above, if you substitute sconces for the wall packs and keep the same arrangement on the wall, what would be the allowed lighting power?

Answer

~~In this case, the allowance would be based on façade lighting, not parking lot lighting. Façade lighting is a specific lighting application so no tradeoffs are permitted with parking lot lighting and the luminaries can not be counted toward creating general site illumination. The Lighting Zone 2 allowance for façade lighting is 0.18 W/ft² and the surface being illuminated is the entire wall. The area of the wall is 260 ft x 20 ft or 5,200 ft². The maximum power is 936 watts.~~

Example 6-34

Question

If a pole has a height of 15 ft, what are the dimensions of the square pattern used for power calculations?

Answer

The illuminated area is defined as any area within a square pattern around each luminaire or pole that is ~~six~~ten times the luminaire mounting height, with the luminaire in the middle of the pattern, less any area that is within a building, under a canopy, beyond property lines, or obstructed by a sign or structure. Therefore, for a 15-ft pole, the area will be described by a square that is ~~90~~150 ft (15 ft X ~~6~~10) on each side, or ~~8,100~~22,500 ft^2 (~~90ft~~150ft x ~~90ft~~150ft), minus areas that are beyond the property line or other obstructions.

Example 6-35

Question

If two poles in the center of an illuminated area are a greater distance than ~~6~~10 times the mounting height, will all of the square footage between them be included in the area?

Answer

The illumination area for each pole is determined as the area within a square pattern around each pole that is ~~six~~ten times the luminaire height (usually the pole height). In most applications, for example parking lots, these square patterns will overlap, so the entire area of the parking lot may be used as the basis for the lighting power budget. However, if the poles are so far apart that squares do not overlap, then each square determines the illumination area for each pole for the purpose of lighting budget. In this case the entire parking lot area may not be used for the basis of lighting budget. This procedure means that unlighted areas are not used for allowed power calculations.

~~Example~~ 6-36

Question

Is the parking lot outside of a hospital ("I" occupancy) regulated by the Standards?

Answer

No. Hospitals are "I" type occupancies and are not covered by Title 24 Building Energy Standards. This includes all outdoor areas. The same is true for all other "I" type occupancies such as detention facilities.

DRAFT

Example 6-37

~~Question~~

~~How do I determine if I should use the actual paved area (watts per ft^2 allowance) or a 25-ft wide area (watts per linear foot allowance)?~~

~~Answer~~

~~You may try both lighting budget calculations and choose the one that is most appropriate for to your situation.~~

~~Example **Error! No text of specified style in document.** 15~~

Question

We have a five-story parking garage. The top level is uncovered. What are the lighting Standards requirements for this garage?

Answer

Since the lower four floors have a roof, they are considered indoor unconditioned buildings and must comply with the requirement of Standards Table 146-C. For these levels, indoor compliance forms LTG-1-C, LTG-2-C, and LTG-3-C may be required. The uncovered top floor is considered a

parking lot and therefore must comply with the hardscape requirements of Standards Table 147-A. An outdoor lighting compliance form, such as OLTG-1-C and OLTG-2-C may be required for the top level.

Example 6-38

Question

Our overflow parking lot is covered with gravel. Is this parking lot considered "hardscape" and must it comply with Table 147-A requirements?

Answer

Yes, parking lots covered with gravel, or any other material used to enhance the surface to accommodate parking or travel, such as pavers, asphalt, cement, or other pervious or non-pervious materials are considered hardscape and must comply with the requirements for hardscape areas.

Example 6-39

Question

What is the allowed lighting power for a 15,000 ft^2 retail parking lot located in Lighting Zone 2?

Answer

~~Standards Table 147-A specifies a lighting power density of 0.08 W/ft² for hardscape including parking lots in Lighting Zone 2 (hardscape for automotive use, method i). Since this is a retail parking lot, Standards Table 147-D, permits a multiplier of 1.25, which can be used to increase the allowed power. The maximum allowed lighting power for this parking lot is therefore:~~

~~0.08 W/ft² x 1.25 x 15,000 ft² = 1,500 watts~~

~~Example **Error! No text of specified style in document.** 18~~

Question

We believe that we need more lighting power than Standards allow. Can we use Standards Table 147-C to get more power?

Answer

There must be an officially adopted local ordinance by the jurisdiction having authority that permits higher illumination levels before Standards Table 147-C can be used. Additionally, the jurisdiction must file the adopted local ordinance with the Energy Commission. See Section 6.3.4 for more information about amending outdoor ordinances by local jurisdictiojns.

DRAFT

6.8 *Alterations and Additions for Outdoor Lighting*

§149

The Standards apply to alterations and additions to outdoor lighting systems. In general, additions are the same as new construction such as the mandatory measures and compliance with lighting power density requirements. The application of the Standards to alternations depends on the scope of the proposed improvements. In general, alterations to existing outdoor lighting systems that for any lighting application that is regulated by the Standards,

increase the connected lighting load or replace more than 50% of the luminaires shall meet the requirements.

Some or all mandatory measures may apply to altered components. The mandatory requirements include certification of any new lamps and ballasts that are installed if they are the type regulated by the Appliance Efficiency Regulations. Any new lighting controls must meet minimum performance requirements. In addition, control and circuiting requirements (§130 and §132) may also apply: All outdoor lighting altered components must comply with the requirements of §149(b)1 as follows, "the altered…lighting…shall meet the applicable requirements of §110 through §139";, and §149(b)-1-J as follows, "Alterations to existing outdoor lighting systems that for any lighting application increase the connected lighting load or replace more than 50 percent of the luminaires shall meet the requirements of Section 147.".

Lighting alterations generally refers to replacing the entire luminaire, which includes the housing, lamps, ballasts, and louvers or lenses. Simply replacing the lamps and ballasts in an existing fixture is not considered a lighting alteration. Replacing or installing new wiring (see the following paragraph) represents a lighting alteration according to the requirements of §149(b)1 and a great opportunity to meet the applicable mandatory requirements as described below.

For lighting alterations purposes, rewiring refers to replacement or installation of new wires that serve the circuit between the switches, relays, branch circuits, other control devices, and rewired luminaire(s). In the case where only the wiring in a circuit that connects the switch and the luminaire(s) is being replaced without any alterations to the luminaire(s), the wiring system itself is considered the altered component according to the requirements of §149(b)1 and must therefore meet the lighting control requirements.

6.8.1 Outdoor Lighting Additions – Mandatory and Lighting Power Density Requirements

§149(a)1. §130, §132

Mandatory Requirements

Additions to existing outdoor lighting must meet all of the Standards mandatory measures for the added lighting fixtures. The mandatory requirements include certification of any new lamps and ballasts that are installed if they are the type regulated by the Appliance Efficiency Regulations. Any new lighting controls must meet minimum performance requirements. In addition, control and circuiting requirements apply as follows:

- Minimum lamp efficacy or motion sensors for lamps rated over 100 watts.
- Luminaire cutoff requirements for outdoor lighting fixtures that use lamps rated greater than 175 watts.
- Automatic controls to turn off lights when daylight is available.
- Multi-level switching requirements for the added lighting.

Lighting Power Density Requirements

The outdoor lighting additions must also comply with lighting power allowances of §147, Tables 147-A and 147-B. These requirements are the same as new construction discussed earlier in this Chapter.

Example 6-40

Question

I am adding a new 20,000 ft^2 section to our parking lot. What are the outdoor lighting requirements for the new addition?

Answer

§149(a)1 in the Standards specifies that all additions to existing outdoor lighting systems must comply with prescriptive requirements of §147 and mandatory measures of §130 through §132.

6.8.2 Outdoor Lighting Alterations

§149(b)1.I.

DRAFT

Existing outdoor lighting systems are not required to meet the Standards unless they are altered. However, alterations of existing outdoor lighting systems are subject to requirements similar to those in the Standards for alterations of existing indoor lighting systems. Alterations that increase the connected load, or replace more than 50% of the existing luminaires for each lighting application included in Standards Tables 147-A and 147-B, are required to meet the requirements for newly installed equipment. Additionally, replacing or installing new wiring represents a lighting alteration according to the requirements of §149(b)1.

6.8.3 Outdoor Lighting Alterations – Mandatory Requirements

When altering lighting components in existing outdoor lighting systems mandatory measures apply to the altered lighting systems. The mandatory

requirements include certification of any new lamps and ballasts that are installed if they are the type regulated by the Appliance Efficiency Regulations. Any new lighting controls must meet minimum performance requirements. In addition, control and circuiting requirements (§130 through §132) apply as follows:

- Either minimum lamp efficacy or motion sensors for lamps rated over 100 watts when the entire luminaire is replaced.
- Luminaire cutoff requirements for outdoor lighting fixtures that use lamps rated greater than 175 watts. Replacement of parts of an existing luminaire, including installing new ballasts, lamps, reflector or lens, without replacing the entire luminaire does not trigger luminaire cutoff requirements.
- Automatic controls to turn off lights when daylight is available for luminaries that are altered.
- Multi-level switching requirements if the alteration consists of rewiring.

6.8.4 Outdoor Lighting Alterations – Lighting Power Allowance Requirements

If an alteration involves replacing more than 50% of the lighting fixtures in a given outdoor lighting application or results in an increase in the connected lighting load, compliance with lighting power allowances of Tables 147-A and 147-B are required.

§149(b) 1 I specifies that when more than 50% of luminaires are replaced in a given Lighting Application included in Standards Tables 147-A and 147-B, the alteration requirements apply to that function area only and not the adjacent areas.

When it is necessary to calculate the existing wattage to demonstrate that the alteration does not exceed current lighting power allowances, use the same methodology used for new lighting installations found in Chapter 5.

DRAFT

Example 6-41

Question

We are replacing 20% of the existing 250-watt fixtures in a parking lot. Does the cutoff requirement apply to the new and existing fixtures?

Answer

Existing fixtures are not required to be upgraded to cutoff. §149 (b) in the Standards specifies that all altered components must meet applicable mandatory requirements, including cutoff control for replacements luminaires. Therefore, all new fixtures that are greater than 175 watts must meet the cutoff requirements of the Standards, even if less then 50% of the luminaires on site are replaced. However, there is an exception to §132(b) where replacement of existing pole mounted luminaires in hardscape areas meeting all of the following conditions are not required to comply with the cutoff requirements:

G. Where the existing luminaire does not meet the luminaire cutoff requirements in Section 132(b); and

H. Spacing between existing poles is greater than six times the mounting height of the existing luminaires; and

I. Where no additional poles are being added to the site; and

J. Where new wiring to the luminaires is not being installed; and

K. Provided that the connected lighting power wattage is not increased.

~~However, the existing fixtures are not required to be upgraded to cutoff.~~

Example 6-42

Question

In a service station we are retrofitting all existing light fixtures under the canopy with new lamps, ballasts, reflectors, and lenses, while leaving the fixture housing intact. Does this trigger the alterations requirements for outdoor lighting?

Answer

No, the Standards (§149(b) 1 I), specify that alterations requirements are triggered only when more than 50% of the luminaires are replaced in a given function area, which includes the entire fixture including the internal components and the housing. In this example, since the fixtures are being retrofitted with new components, the alterations requirements of the Standards are not triggered.

Example 6-43

Question

In a service station we are replacing more than 50% of under canopy fixtures. Does this trigger the alteration requirements for outdoor lighting? Do we need to bring non-canopy lighting such as hardscape lighting up to code as well?

Answer

§149(b) 1 I specifies that when more than 50% of luminaires are replaced in a given Lighting Application included in Standards Tables 147-A and 147-B, the alteration requirements apply to that function area only. So, in this example, only the under canopy luminaires must meet the requirements of §147. Hardscape~~s~~ and other outdoor Lighting Applications other than the canopy need not meet these requirements even if they are included in the permit along with the canopy lighting.

DRAFT

Example 6-44

Question

We are adding new light fixtures to the existing lighting systems in a parking lot. Which Standards requirements are triggered by this alteration?

Answer

Since additional load is being added to the parking lot, which is part of the general hardscape lighting. Therefore, the entire ~~parking lot~~general hardscape must comply with the lighting power density requirements for the given Lighting Zone. However, only the newly installed lighting system must comply with the applicable mandatory requirements, including control requirements and cutoff controls.

Example 6-45

Question

I am going to change the ballasts in my façade lighting system. Will I be required to meet the new outdoor lighting standard for façade lighting?
Answer

No, the replacing of only lamps or ballasts in outdoor lighting systems is not considered an alteration and does not trigger compliance with outdoor lighting Standards. Replacing entire fixtures will trigger mandatory requirements for the altered (replaced) fixtures only. Replacing more than 50% of the lighting fixtures or adding to the connected lighting load for any outdoor lighting application will trigger the lighting power density requirements of the Standards.

6.9 Compliance and Enforcement

This section contains information about required outdoor lighting documentation, including outdoor lighting plan check documents in Section 6.9.1, Installation Certificate in Section 6.9.2, and Certificate of Acceptance in Section 6.9.3

6.9.1 Outdoor ~~and Sign~~ Lighting Plan Check Documents

At the time a building permit application is submitted to the building department, the applicant also submits plans and energy compliance documentation. This section describes the recommended forms and procedures for documenting compliance with the outdoor lighting ~~and sign lighting~~ requirements of the Standards. ~~It does not describe the details of the requirements; these are presented in Section ????, Summary of Requirements. The following discussion is addressed to the designer preparing construction documents and compliance, and to the building department plan checkers who are examining those documents for compliance with the Standards.~~

The Administrative Regulations Section 10-103(a)(2) require that the Certificate(s) of Compliance and any applicable supporting documentation be submitted with permit applications enabling the plans examiner to verify that the building or system design specifications shown on construction documentation is consistent with the energy features specified on the Certificate of Compliance in order to determine whether the design complies with the Energy Efficiency Standards. The Certificate of Compliance forms submitted to the enforcement agency to demonstrate compliance must be readily legible and of substantially similar format and informational order as those specified in this compliance manual. See Chapter 2 for additional information about Compliance and Enforcement.

DRAFT

The use of each form is briefly described below, and complete instructions for each form are presented in the following subsections. These forms may be included in the lighting equipment schedules on the plans, provided the information is in a similar format as the suggested form.

~~OLTG-1-C: Is required on plans for all submittals for outdoor lighting. Part 2 of 2 may be incorporated in schedules on the plans. Either LTG-1-C or OLTG-1-C may be used for signs as follows:~~

- ~~Use either LTG-1-C or OLTG-1-C if the project consists of indoor or outdoor signs only.~~
- ~~Use LTG-1-C if the project consists of indoor lighting, and indoor or outdoor signs, but no other outdoor lighting.~~
- ~~Use OLTG-1-C if the project consists of outdoor lighting, and indoor or outdoor signs, but no other indoor lighting.~~
- ~~OLTG-2-C (Parts 1-3): LIGHTING COMPLIANCE SUMMARY – Applicable parts required for ALL outdoor lighting allowances (except for signs).~~
- ~~OLTG-3-C: AREA CALCULATION WORKSHEETS - Applicable parts required for ALL outdoor area calculations.~~
- ~~OLTG-4-C: SIGN LIGHTING COMPLIANCE is required for ALL internally and externally illuminated signs, for both indoor and outdoor signs.~~

6.9.2 OLTG-1-C: Certificate of Compliance

The OLTG-1-C Certificate of Compliance form is in two parts. Both parts must appear on the plans (usually near the front of the electrical drawings). A copy of these forms should also be submitted to the building department along with the rest of the compliance submittal at the time of building permit application. With building department approval, the applicant may use alternative formats of these forms (rather than the official Energy Commission forms), provided the information is the same and in a similar format.

OLTG-1-C Part 1 of 2 Project Description

1. PROJECT NAME is the title of the project, as shown on the plans and known to the building department.
2. DATE is the date of preparation of the compliance submittal package. It should be on or after the date of the plans, and on or before the date of the building permit application.
3. PROJECT ADDRESS is the address of the project as shown on the plans and as known to the building department.
4. PRINCIPAL DESIGNER – OUTDOOR LIGHTING ~~/ SIGN LIGHTING~~ is the person responsible for the preparation of the lighting plans, one of two people who sign the STATEMENT OF COMPLIANCE (see below). The person's telephone number is given to facilitate response to any questions that arise.
5. DOCUMENTATION AUTHOR is the person who prepared the energy compliance documentation. This may or may not be the principal designer (it may be a person specializing in energy standards compliance work). This person is not subject to the Business and Profession's Code. The person's telephone number is given to facilitate response to any questions that arise.

DRAFT

6. ENFORCEMENT AGENCY USE is reserved for building department record keeping purposes.
7. DATE OF PLANS is the last revision date of the plans. If the plans are revised after this date, it may be necessary to resubmit the compliance documentation to reflect the altered design. The building department will determine whether or not the revisions require this.
8. OUTDOOR LIGHTING ZONE of the building according to §10-114. ~~This information is not required if the project consists solely of sign lighting.~~ Refer to Section **6.3**~~**Error! Reference source not found.**~~.

~~1. FUNCTION TYPE is specified because there are special requirements for outdoor lighting and for indoor or outdoor signs.~~

9. PHASE OF CONSTRUCTION indicates the status of the outdoor lighting or sign lighting project described in the documents.
10. NEW CONSTRUCTION should be checked for all new outdoor lighting and sign lighting projects. See Section
11. ADDITION should be checked for an addition which is not treated as a stand-alone outdoor lighting or sign lighting project, which uses are described in Section 6.6.1, Outdoor Lighting Additions.
12. ALTERATION should be checked for alterations to existing outdoor lighting or sign lighting systems. See Section ?????.

DRAFT

Statement of Compliance

The Statement of Compliance is signed by the person responsible for preparation of the plans for the outdoor lighting or sign lighting project. This person is also responsible for the energy compliance documentation, even if the actual work is delegated to someone else (the Documentation Author described above). It is necessary that the compliance documentation be consistent with the plans. The Business and Professions Code governs who is qualified to prepare plans, and therefore to sign this statement; check the appropriate box that describes the signer's eligibility.

Applicable sections from the Business and Professions Code (based on the edition in effect as of August 2000), referenced on the Certificate of Compliance, are provided below:

5537. *(a) This chapter does not prohibit any person from preparing plans, drawings, or specifications for any of the following:*

(1) Single-family dwellings of woodframe construction not more than two stories and basement in height.

(2) Multiple dwellings containing no more than four dwelling units of woodframe construction not more than two stories and basement in height. However, this paragraph shall not be construed as allowing an unlicensed person to design multiple clusters of up to four dwelling units each to form apartment or condominium complexes where the total exceeds four units on any lawfully divided lot.

(3) Garages or other structures appurtenant to buildings described under subdivision (a), of woodframe construction not more than two stories and basement in height.

(4) Agricultural and ranch buildings of woodframe construction, unless the building official having jurisdiction deems that an undue risk to the public health, safety, or welfare is involved.

(b) If any portion of any structure exempted by this section deviates from substantial compliance with conventional framing requirements for woodframe construction found in the most recent edition of Title 24 of the California Code of Regulations or tables of limitation for woodframe construction, as defined by the applicable building code duly adopted by the local jurisdiction or the state, the building official having jurisdiction shall require the preparation of plans, drawings, specifications, or calculations for that portion by, or under the responsible control of, a licensed architect or registered engineer. The documents for that portion shall bear the stamp and signature of the licensee who is responsible for their preparation. Substantial compliance for purposes of this section is not intended to restrict the ability of the building officials to approve plans pursuant to existing law and is only intended to clarify the intent of Chapter 405 of the Statutes of 1985.

5537.2. *This chapter shall not be construed as authorizing a licensed contractor to perform design services beyond those described in Section 5537 or in Chapter 9 (commencing with Section 7000), unless those services are performed by or under the direct supervision of a person licensed to practice architecture under this chapter, or a professional or civil engineer licensed pursuant to Chapter 7 (commencing with Section 6700) of Division 3, insofar as the professional or civil engineer practices the profession for which he or she is registered under that chapter.*

However, this section does not prohibit a licensed contractor from performing any of the services permitted by Chapter 9 (commencing with Section 7000) of Division 3 within the classification for which the license is issued. Those services may include the preparation of shop and field drawings for work which he or she has contracted or offered to perform, and designing systems and facilities which are necessary to the completion of contracting services which he or she has contracted or offered to perform.

However, a licensed contractor may not use the title "architect," unless he or she holds a license as required in this chapter.

5538. *This chapter does not prohibit any person from furnishing either alone or with contractors, if required by Chapter 9 (commencing with Section 7000) of Division 3, labor and materials, with or without plans, drawings, specifications, instruments of service, or other data covering such labor and materials to be used for any of the following:*

(a) For nonstructural or nonseismic storefronts, interior alterations or additions, fixtures, cabinetwork, furniture, or other appliances or equipment.

(b) For any nonstructural or nonseismic work necessary to provide for their installation.

(c) For any nonstructural or nonseismic alterations or additions to any building necessary to or attendant upon the installation of those storefronts, interior alterations or additions, fixtures, cabinetwork, furniture, appliances, or equipment, provided those alterations do not change or affect the structural system or safety of the building.

6737.1. *(a) This chapter does not prohibit any person from preparing plans, drawings, or specifications for any of the following:*

(1) Single-family dwellings of woodframe construction not more than two stories and basement in height.

(2) Multiple dwellings containing no more than four dwelling units of woodframe construction not more than two stories and basement in height. However, this paragraph shall not be construed as allowing an unlicensed person to design multiple clusters of up to four dwelling units each to form apartment or condominium complexes where the total exceeds four units on any lawfully divided lot.

(3) Garages or other structures appurtenant to buildings described under subdivision (a), of woodframe construction not more than two stories and basement in height.

(4) Agricultural and ranch buildings of woodframe construction, unless the building official having jurisdiction deems that an undue risk to the public health, safety or welfare is involved.

(b) If any portion of any structure exempted by this section deviates from substantial compliance with conventional framing requirements for woodframe construction found in the most recent edition of Title 24 of the California Administrative Code or tables of limitation for woodframe construction, as defined by the applicable building code duly adopted by the local jurisdiction or the state, the building official having jurisdiction shall require the preparation of plans, drawings, specifications, or calculations for that portion by, or under the direct supervision of, a licensed architect or registered engineer. The documents for that portion shall bear the stamp and signature of the licensee who is responsible for their preparation.

6737.3. *A contractor, licensed under Chapter 9 (commencing with Section 7000) of Division 3, is exempt from the provisions of this chapter relating to the practice of electrical or mechanical engineering so long as the services he or she holds himself or herself out as able to perform or does perform, which services are subject to the provisions of this chapter, are performed by, or under the responsible supervision of a registered electrical or mechanical engineer insofar as the electrical or mechanical engineer practices the branch of engineering for which he or she is registered.*

This section shall not prohibit a licensed contractor, while engaged in the business of contracting for the installation of electrical or mechanical systems or facilities, from designing those systems or facilities in accordance with applicable construction codes and standards for work to be performed and supervised by that contractor within the classification for which his or her license is issued, or from preparing electrical or mechanical shop or field drawings for work which he or she has contracted to perform. Nothing in this section is

intended to imply that a licensed contractor may design work that is to be installed by another person.

Lighting Mandatory Measures

This portion requests the location of notes clarifying the inclusion of the mandatory requirements. Notes should be included on the plans to demonstrate compliance with mandatory requirements of the Standards.

Following are prototype examples of the notes that should be rewritten to actual conditions. A note for each of the items listed should be included, even if the note states “not applicable”.

Determining installed lighting power:

- Installed lighting power has been determined in accordance with §130(c)1.

Controls for inefficient lighting systems:

- All outdoor luminaires with lamps rated over 100 watts must either: have a lamp efficacy of at least 60 lumens per watt; or be controlled by a motion sensor (§132(a)).

Outdoor luminaire cutoff:

- Outdoor luminaires that use lamps rated greater than 175 watts (§132 (b)) in the hardscape areas, parking lots, building entrances, canopies and all outdoor sales areas will be required to be designated cutoff in a photometric test report that includes any tilt or other non-level mounting conditions.

DRAFT

Controls to turn off the lights during the day:

- All permanently installed outdoor lighting must be controlled by a photoelectric switch or astronomical time switch that automatically turns off the outdoor lighting when daylight is available (§132 (c)1).

Controls to provide the option to turn off a portion of the lights:

- For lighting of building facades, parking lots, garages, sales and non-sales canopies, and all outdoor sales areas, automatic controls are required to provide the owner with the ability to turn off the lighting or to reduce the lighting power by at least 50% but not exceeding 80% when the lighting is not needed (§132(c)2).

The above notes are only examples of wording. Each mandatory measure that requires a separate note should be listed on the plans.

To verify certification, use one of the following options:

- The Energy Hotline (see above) can verify certification of appliances not found in the above directories.

- The Energy Commission's Web Site includes listings of energy efficient appliances for several appliance types. The web site address is http://www.energy.ca.gov/efficiency/appliances/.
- The complete appliance databases can be downloaded from the Energy Commission's Internet FTP site (ftp://sna.com/pub/users/efftech/appliances). This requires database software (spreadsheet programs cannot handle some of the larger files). To use the data, a user must download the database file (or files), download a brand file and a manufacturer file and then decompress these files. Then download a description file that provides details on what is contained in each of the data fields. With these files, and using database software, the data can be sorted and manipulated.

Documenting the mandatory measures on the plans is accomplished through a confirmation statement, notes and actual equipment location as identified on the plans. The plans should clearly indicate the location and type of all mandatory control devices; such as motion sensors, photocontrols, astronomical time switches, and automatic time switches.

OLTG-1-C Part 2 of 2

Part 2 of OLTG-1-C documents that mandatory measures, lighting schedules, and automatic controls are in compliance with Standards.

The first section consists of checklists indicating compliance with outdoor lighting power allowance requirements or sign lighting compliance. There are two boxes on each line, one checkbox for indicating that a particular compliance form was filled out, and the other checkbox for indicating the compliance form is "Not Applicable" to the project. One box should be checked for each line.

The second section consists of checklists indicating compliance with outdoor lighting mandatory measures. There are two boxes on each line, one checkbox for indicating compliance with a particular mandatory section in Standards, and the other checkbox for indicating this mandatory measure is "Not Applicable" to the project. One box should be checked for each line.

The third section should be used to describe the lighting control devices designed to be installed.

The information on this form may, with the approval of the building official, be incorporated into equipment schedules on the plans, rather than presented on the OLTG-1-C Part 2 form. If this is done, however, the same information should be included in one schedule in a format similar to the Energy Commission form.

6.9.3 OLTG-2-C

Form OLTG-2-C (Lighting Compliance Summary) shall be completed and submitted for ~~general site~~Specific Application illumination (part 1 of ~~4~~3); for General Hardscape and local ordinance lighting levels ~~or special security requirement multipliers (part~~(parts 2 of ~~4); for specific applications other than vehicle service station without canopies (part~~3 and 3 of ~~4); and, for vehicle service stations without canopies (part 4 of 4~~3). These forms are not required to be on the plans (they may be submitted separately in the energy compliance

package) the designer may include them in the lighting equipment schedules provided the information is in a similar format.

~~OLTG-3-C (Area Calculation Worksheets) must be used to calculate the areas of each application, which is then entered into the appropriate column on OLTG-2-C.~~

Lighting Compliance Summary for ~~General Site Illumination~~Specific Applications

OLTG-2-C Part 1 of ~~4~~3 is for lighting power allowances for general site illumination (Standards Table 147-A). Tradeoffs are normally allowed between general site illumination applications. However, tradeoffs are not allowed for general site illumination applications when using Exception 1 or Exception 2 to §147 (c)1 B. [Use OLTG-2-C Part 2 of ~~4~~3 when applying Exception 1 or Exception 2 to §147 (c)1 B]. The TOTAL INSTALLED WATTS (bottom of COLUMN ~~O~~J) cannot be greater than the ~~TOTAL ALLOTTED WATTS (bottom~~REMAINING GENERAL HARDSCAPE ALLOWANCE (top of COLUMN ~~D~~I).

7. COLUMN A - List the lighting application category from Standards Table 147-A.
8. COLUMN B - List the lineal feet (lf), or square feet (ft^2) of the area as applicable. ~~Use the appropriate OLTG-3-C (Area Calculation Worksheets) to calculate illuminated lengths or areas to enter into this column.~~ Each portion of all illuminated areas shall be assigned only one ~~lighting application~~Specific Application, and the applications shall be consistent with the actual use of the area.
9. COLUMN C - List the allotted lighting power density (LPD) in watts per lineal foot (lf) or watts per square foot (ft^2) from Standards Table 147-A. The LPD must correspond with the lighting zone (LZ) checked in OLTG-1-C.
10. COLUMN D - Calculate the allotted watts by multiplying COLUMNS B x C.
11. COLUMN E is the code for each luminaire type as it is described by name, type or symbol on the plans.
12. COLUMN F - Luminaire description is the type of lighting fixture (shoe box, cobra head, vertical/horizontal burn, etc).
13. COLUMN G - Cutoff designation is the IESNA cutoff designation, such as full-cutoff, cutoff, semi-cutoff and non-cutoff.
14. COLUMN H - Type lamp is the type of lamp (incandescent, fluorescent or high-intensity discharge, LED, etc.).
15. COLUMN I - Number of lamps per luminaire is the number of lamps in each luminaire or fixture.
16. COLUMN J - Watts per lamp is the listed watts per lamp.
17. COLUMN K - Number ballasts per luminaire is the number of ballasts in each luminaire or fixture.

DRAFT

18. COLUMN L - Watts per luminaire are to be determined in accordance with §130 (c). An alternate method to determine luminaire power for pin-based fluorescent and high intensity discharge (HID) lighting systems is to use the watts that are listed in ACM Manual Appendix NB. However, luminaires with screw-base sockets (other than HID fixtures manufactured with hard-wired HID ballasts), and lighting systems which allow the addition or relocation of luminaires without altering the wiring of the system must be determined in accordance with §130 (c).
19. COLUMN M - Check (➽) if Energy Commission default indicates that the luminaire wattages used for pin-based fluorescent or for high intensity discharge lighting systems are from the Energy Commission defaults in ACM Manual Appendix NB.
20. COLUMN N - Number of luminaires is the number of luminaires or fixtures used to illuminate this lighting application
21. COLUMN O - Calculate installed watts. Multiply the watts per luminaire by the number of luminaires (L x N) and enter the total.
22. COLUMN P – Calculates the difference between the Specific Application allowance and the actual watts. If the actual wattage is below the allowance, a value of '0' is placed in the box. If the actual wattage is greater than the Specific Application allowance, the deficit value is placed in the box, and must be accounted in the General Hardscape allowance calculations further in the form.

Lighting Compliance Summary ~~for~~(General Hardscape Allowance and Local ~~Ordinance or Special Security Requirements~~Ordinances)

OLTG-2-C Part 2 of ~~4~~3 is to be used to calculate the overall General Hardscape Allowance (at the top) and for Exception 1 to §147(c)1.B when specific light levels are required by law through a local ordinance and the lighting power densities specified in Standards Table 147-C are used, and for Exception 2 to §147(c)1.B. when special security requirement multipliers from Standards Table 147-D are used (at the bottom). Tradeoffs are NOT allowed between these applications. For each row, the installed watts (COLUMN O) cannot be greater than the allotted watts (COLUMN D).

5. ~~COLUMN A - List the lighting application category from Standards Table 147-A.~~COLUMN A - List the illuminated area as classified in the local ordinance language. This shall be treated as a Specific Application for the purposes of these calculations.
6. COLUMN B - List the ~~lineal feet (lf), or~~ square feet (ft^2) of the area as applicable. ~~Use the appropriate OLTG-3-C (Area Calculation Worksheets) to calculate the illuminated area.~~ Each portion of all illuminated areas shall be assigned only one lighting application, and the applications shall be consistent with the actual use of the area.
7. COLUMN C - List the allotted lighting power density (LPD) in watts per ~~lineal foot (lf) or watts~~ per square foot (ft^2) from Standards Table 147-A. The LPD must correspond with the Lighting Zone (LZ) checked in OLTG-1-C.

8. ~~COLUMN D Either list the multiplier for special security requirements from Standards Table 147-D, if applicable, or write, "147-C" to indicate that the alternate power allowances from Standards Table 147-C are being used. The multipliers can be used only when Exception 2 to §147(c)1.B. applies.~~ COLUMN D – Calculate the percentage of the General Hardscape that this Local Ordinance applies to. This is used to increase the General Hardscape allowance by the portion of the site that is applicable, but not for other portions of the site. Standards Table 147-C can be used only when there is a law through a local ordinance requiring specific lighting levels.
9. COLUMN E - Calculate the ~~allotted watts. When using special security multipliers from Standards Table 147-D multiply columns (B~~ General Hardscape allowance (COLUMN D x ~~C x D). When using lighting power allowances from Standards Table 147-C multiply columns (B x C~~General Hardscape Allowance as calculated at the top right of the form).
10. COLUMN F – Insert the Local Ordinance allowance from Table 147-C.
11. COLUMN G – Calculate the Allowed Watts, which is the sum of COLUMN E (General Hardscape Allowance) and the product of COLUMNS B and F (Local Ordinance Area and Additional Allowance for Local Ordinance).
12. COLUMN H - The code for each luminaire type is described by its name, type or symbol as shown on the plans.
13. COLUMN I - Luminaire description is the type of lighting fixture (shoe box, cobra head, vertical/horizontal burn, etc).
14. COLUMN J - Cutoff designation is the IESNA cutoff designation, such as full cutoff, cutoff, semi cutoff and non cutoff.
15. COLUMN K - Type lamp is the type of lamp (incandescent, fluorescent or high-intensity discharge, LED, etc.).
16. COLUMN L - Number of lamps per luminaire is the number of lamps in each luminaire or fixture.
17. COLUMN M - Watts per lamp is the listed watts per lamp.
18. COLUMN N - Number ballasts per luminaire is the number of ballasts in each luminaire or fixture.
19. COLUMN O - Watts per luminaire are to be determined in accordance with §130 (c). An alternate method to determine luminaire power for pin-based fluorescent and high intensity discharge (HID) lighting systems is to use the watts that are listed in ACM Manual Appendix NB. However, luminaires with screw-base sockets (other than HID fixtures manufactured with hard-wired HID ballasts), and lighting systems which allow the addition or relocation of luminaires without altering the wiring of the system must be determined in accordance with §130 (c).

~~15.~~20. COLUMN P - The number of luminaires is the number of luminaires or fixtures used to illuminate this general lighting application.

DRAFT

~~16.~~21. COLUMN ~~P~~Q - Installed watts multiply the watts per luminaire by the number of luminaires (~~M x~~ O x P) and enter the total. ~~For each line, the installed watts (COLUMN P) cannot be greater than the Allotted watts (COLUMN E).~~

Installed Lighting Power Allowance for ~~Specific Applications~~General Hardscape

OLTG-2-C Part 3 of ~~4~~3 is for ~~specific applications~~calculating the remaining General Hardscape Allowance (Standards Table 147-~~B), other than vehicle service station without canopies. Tradeoffs are not allowed between specific applications~~A).

~~1. COLUMN A - List the lighting application category from Standards Table 147-B.~~

~~1. COLUMN B - List the lineal feet (lf), or square feet (ft^2) of the area as applicable. Use the appropriate OLTG-3-C (Area Calculation Worksheets) to calculate the illuminated area. Each portion of all illuminated areas shall be assigned only one lighting application, and the applications shall be consistent with the actual use of the area.~~

~~1. COLUMN C - List the allotted lighting power density (LPD) in watts per lineal foot or watts per square foot from Standards Table 147-B. The LPD must correspond with the Lighting Zone (LZ) checked in OLTG-1-C.~~

~~1. COLUMN D - Calculate the allotted watts by multiplying columns (B x C).~~

11. ~~COLUMN E~~COLUMN A (top) - List the General Hardscape Allowance from OLTG-2-C, 2 of 3.

12. COLUMN B (top) – List the General Allowance Used for Local Ordinance Areas from OLTG-2-C, 2 of 3.

13. COLUMN C (top) – Calculate the Remaining General Hardscape Allowance (COLUMN A – COLUMN B)

~~5.~~*14.* COLUMN A - The code for each luminaire type is described by name, type or symbol as shown on the plans.

~~6.~~15. COLUMN ~~F~~ B - Luminaire description lists the type of lighting fixture (shoe box, cobra head, vertical/horizontal burn, etc).

~~1.~~ COLUMN ~~G - Cutoff designation is the IESNA cutoff designation, such as full-cutoff, cutoff, semi-cutoff and non-cutoff.~~

~~1. COLUMN H - Type lamp is the type of lamp (incandescent, fluorescent or high-intensity discharge, LED, etc.).~~

~~1. COLUMN I - Number of lamps per luminaire is the number of lamps in each luminaire or fixture.~~

~~1. COLUMN J - Watts per lamp is the listed watts per lamp.~~

~~1. COLUMN K - Number ballasts per luminaire is the number of ballasts in each luminaire or fixture.~~

~~1. COLUMN L - Watts per luminaire are to be determined in accordance with §130(c). An alternate method to determine luminaire power for pin-~~

DRAFT

~~based fluorescent and high intensity discharge (HID) lighting systems is to use the watts that are listed in ACM Manual Appendix NB. However, luminaires with screw-base sockets (other than HID fixtures manufactured with hard-wired HID ballasts), and lighting systems which allow the addition or relocation of luminaires without altering the wiring of the system must be determined in accordance with §130(c).~~

1. ~~COLUMN M - Check (➽) if Energy Commission default indicates that the luminaire wattages used for pin-based fluorescent or for high intensity discharge lighting systems are from the Energy Commission defaults in ACM Manual Appendix NB.~~

6. ~~COLUMN N - Number of luminaires is the number of luminaires or fixtures used to illuminate this specific lighting application.~~

6. ~~COLUMN O - To find design watts, multiply the watts per luminaire by number of luminaires (L x N).~~

6. ~~COLUMN P - The allowed watts for each line is the smaller of allotted watts (COLUMN D) or design watts (COLUMN O).~~

~~***Installed Lighting Power Allowance for Vehicle Service Stations without Canopies***~~

16. ~~OLTG-2~~ C - Cutoff designation is the IESNA cutoff designation, such as full-cutoff, cutoff, semi-cutoff and non-cutoff.
17. COLUMN D - Type lamp is the type of lamp (incandescent, fluorescent or high-intensity discharge, LED, etc.).
18. COLUMN E - Number of lamps per luminaire is the number of lamps in each luminaire or fixture.
19. COLUMN F - Watts per lamp is the listed watts per lamp.
20. COLUMN G - Number ballasts per luminaire is the number of ballasts in each luminaire or fixture.
21. COLUMN H - Watts per luminaire are to be determined in accordance with §130(c). An alternate method to determine luminaire power for pin-based fluorescent and high intensity discharge (HID) lighting systems is to use the watts that are listed in ACM Manual Appendix NB. However, luminaires with screw-base sockets (other than HID fixtures manufactured with hard-wired HID ballasts), and lighting systems which allow the addition or relocation of luminaires without altering the wiring of the system must be determined in accordance with §130(c).
22. ~~COLUMN M - Check (➽) if Energy Commission default indicates that the luminaire wattages used for pin-based fluorescent or for high intensity discharge lighting systems are from the Energy Commission defaults in ACM Manual Appendix NB~~COLUMN I - Number of luminaires is the number of luminaires or fixtures used to illuminate this specific lighting application.
23. COLUMN J - To find design watts, multiply the watts per luminaire by ~~the~~ number of luminaires (~~L~~ H x ~~N~~I).

DRAFT

24. BOTTOM OF COLUMN J - The total installed watts for each line is the sum of allotted watts (COLUMN J). The bottom of COLUMN J must be less than or equal to COLUMN C (top).

6.9.4 Installation Certificate

During the construction process, the general contractor or specialty subcontractors are required to complete various construction certificates. These certificates verify that the contractor is aware of the requirements of the building energy efficiency standards, and that the actual construction/installation meets the requirements.

Installation Certificates are required to be completed and submitted to certify compliance of regulated energy features such as luminaires and outdoor lighting controls. The licensed person responsible for the construction, or for the installation of a regulated energy feature must ensure their construction or installation work is done in accordance with the approved plans and specifications for the outdoor lighting system, and must complete and sign an Installation Certificate to certify that the installed features, materials, components or manufactured devices for which they are responsible, conform to the plans and specifications and the Certificate of Compliance documents approved by the enforcement agency for the building. A copy of the completed signed and dated Installation Certificate must be posted at the building site for review by the enforcement agency in conjunction with requests for final inspection for the building. See Chapter 2.2.3 for more information about the Installation Certificate.

6.9.5 Certificate of Acceptance

Acceptance Requirements

Before an occupancy permit is granted for a new building or space, or a new lighting system serving a building, space, or site is operated for normal use, all outdoor lighting controls serving the site shall be certified as meeting the Acceptance Requirements for Code Compliance. A Certificate of Acceptance shall be submitted to the enforcement agency under §10-103(a) of Title 24, Part 1.

DRAFT

The acceptance requirements that apply to outdoor lighting controls include the following:

(a) Certifies plans, specifications, installation certificates, and operating and maintenance information meet the requirements of Part 6.

(b) Certified that outdoor lighting controls meet the applicable requirements of §119 and §132.

Acceptance testing must be conducted, and a Certificate of Acceptance must be completed and submitted before the enforcement agency can issue the certificate of occupancy. The procedures for performing the acceptance tests

are documented in Reference Nonresidential Appendix NA7. See the following chapters for more information about outdoor lighting control acceptance requirements.

- Chapter 2.2.4 Certificate of Acceptance
- Chapter 10.1 Acceptance Requirements
- Chapter 10.7 Testing Procedures for Lighting Equipment
- Chapter 10.9 Outdoor Lighting forms For Acceptance Requirements

DRAFT

7. Sign Lighting

7.1 Overview
7.1.1 History
7.1.2 Scope and Application
7.1.3 Summary of Requirements

7.2 Mandatory Measures
7.2.1 Certification
7.2.2 Sign Lighting Installed Wattage
7.2.3 Automatic Lighting Controls
7.2.4 Dimming Controls
7.2.5 Demand Responsive Electronic Message Center Controls

7.3 Sign Lighting Energy Requirements
7.3.1 Performance Approach
7.3.2 Prescriptive Approach
7.3.3 Additional and Alterations
7.3.4 Sign Alterations

7.4 Sign Lighting Plan Check Documents
7.4.1 SLTG-C: Certificate of Compliance
A: (Part 1 of 2) Project Description and Mandatory Sign Lighting Controls
B: (Part 2 of 2) Compliance Method

7.5 Lighting Inspection

DRAFT

~~30.1~~Overview

The sign lighting energy standards conserve energy, reduce peak electric demand, and are technically feasible and cost effective. They set minimum control requirements, maximum allowable power levels and minimum efficacy requirements.

Sign lighting is addressed in this chapter.

The Standards do not allow tradeoffs between sign lighting power allowances and other end uses including outdoor lighting, ~~or~~ indoor lighting, HVAC, building envelope, or water heating (§147(a)).

7.1.1 History and Background

Regulations for lighting have been in effect in California since 1977, but until the adoption of the 2005 Standards only addressed indoor lighting, inside spaces that were air conditioned or heated, and only outdoor lighting that was connected to a lighting panel when the lighting panel was located inside a conditioned building. The 2005 Standards expanded the scope to include most outdoor lighting applications, indoor and outdoor sign lighting applications, and indoor lighting applications in unconditioned buildings.

The 2008 Sign Lighting Standards evolved over a three year period through a dynamic, open, public process. The Energy Commission solicited ideas, proposals, and comments from a number of interested parties, and encouraged all interested persons to participate in a series of public hearings and workshops through which the Energy Commission gathered information and viewed presentations on energy efficiency possibilities from a variety of perspectives. The Energy Commission hired a consulting team that included a number of nationally recognized lighting experts to assist in the development of the Standards.

7.1.2 Scope and Application

The 2008 sign lighting Standards address both indoor and outdoor signs. The Standards include control requirements for all illuminated signs (§133), as well as set limits on installed lighting power for internally illuminated and externally illuminated signs(§148).

No Tradeoffs

The Standards do not allow tradeoffs between sign lighting power allowances and indoor lighting or outdoor lighting, HVAC, building envelope, or water heating

7.1.3 Summary of Requirements

§119, §133, §148 and §149

A. Mandatory Measures

The Standards require that indoor and outdoor sign lighting be automatically controlled so that it is turned off during daytime hours and during other times when it is not needed. These controls must be certified by the manufacturer to the Energy Commission and listed in the Energy Commission directories. More detail on the mandatory measures is provided in Section 7.2~~1.2~~.

In brief, the mandatory sign lighting requirements include:

- Automatic shutoff controls,
- Dimming controls, and
- Demand responsive controls for electronic message centers

All lighting controls must meet the requirements of §119 of the Standards as applicable. The sign energy Standards are the same throughout the state and are independent of outdoor Lighting Zones.

B.

Sign Lighting Power

Sign lighting Standards apply to both indoor and outdoor signs and contain both prescriptive and performance approaches. The performance approach specifies a maximum lighting power that can be installed, expressed in W/ft² of sign area. The prescriptive requirements specify that the signs shall be illuminated with efficient lighting sources (electronic ballasts, high efficacy lamps, efficient power supplies and efficient transformers). Table 1-1 below summarizes the performance and prescriptive sign compliance approaches. Detailed requirements are given in Section 1.3.

Table 71-11 – Sign Compliance Alternatives

Performance Approach (See Section 7.3.1 for more information about the Performance Approach)	
Type of Sign	Allowed Lighting Power
Internally Illuminated	12 W/ft²
Externally Illuminated	2.3 W/ft²
Prescriptive Approach (See Section 7.3.2 for more information about the Prescriptive Approach)	
Signs illuminated by only or more of the following light sources: 1. High pressure sodium 2. Pulse-start or ceramic metal halide with a ballast efficiency ≥ 88%, per ANSI C82.6-2005 3. Pulse-start metal halide ≤ 320 watt, ≠ 250 or 175 watt, and with a ballast efficiency ≥ 80%, per ANSI C82.6-2005 4. Neon and cold cathode with a transformer or power supply having: a. Efficiency ≥ 75% with output current< 50 mA, or b. Efficiency ≥ 68% with output current ≥ 50 mA, c. where efficiency is defined as the ratio of output wattage to input wattage at 100% tubing load 5. Fluorescent lamps with a minimum color rendering index (CRI) of 80 6. Light emitting diodes (LEDs) with a power supply efficiency ≥ 80% EXCEPT LEDs powered with 120 volt AC to lower voltage AC or DC power supplies rated ≤ 250 watt must comply with Appliance Efficiency Regulations (Title 20) 7. Compact fluorescent lamps that do not contain medium based sockets. (E24/E26) 8. Electronic ballasts ≥ 20 kHz,	

7.2 Mandatory Measures

The mandatory features and devices must be included in all sign lighting projects when they are applicable. These features have been proven to be cost-effective over a wide range of sign lighting applications. The mandatory measures require that the performance of lighting controls be certified by the manufacturers to the Energy Commission, and that sign lighting systems have controls for efficient operation. Mandatory measures for signs are specified in

§119, §130, and §133. These are similar to the mandatory measures for indoor and outdoor lighting.

7.2.1 Certification of Lighting Controls

§119

Manufacturers of lighting control products shall certify the performance of their products to the California Energy Commission in accordance with the applicable provisions in §119. It is the responsibility of the designer, however, to specify products that meet these requirements. Code enforcement officials, in turn, check that the lighting controls specified are indeed certified.

The certification requirement applies to photo-controls, astronomical time switches, and automatic controls. Lighting control devices may be individual devices or systems consisting of two or more components, such as an Energy Management Control System (EMCS), Many of these requirements are part of standard practice in California and should be well understood by those responsible for designing or installing the sign lighting.

All automatic sign lighting control devices must be certified by the manufacturer with the Energy Commission before they can be installed. Once a device is certified, it is listed in the Directory of Automatic Lighting Control Devices. Call the Energy Hotline at 1-800-772-3300 to obtain more information.

All control devices must have instructions for installation and start-up calibration, must be installed in accordance with such directions, and must have a status signal (visual or audio) that warns of failure or malfunction.

7.2.2 Sign Lighting ~~Equipment~~ Installed Wattage

§130(d).

The lighting wattage of signs shall be determined in accordance with the applicable provisions of §130(d). The rules for determining lighting wattage are discussed in detail in Section 5.5, Calculating Lighting Power for Nonresidential Indoor Lighting.

7.2.3 Automatic Lighting Controls

§133(a)1 and §133(a) 2.

-All signs, both indoor and outdoor, with permanently connected lighting shall be controlled with an automatic time switch control that complies with the applicable requirements of §119.

All outdoor signs shall be controlled with a photocontrol or outdoor astronomical time switch control. However, outdoor signs in tunnels and large covered areas that require illumination during daylight hours are not required to be controlled with a photocontrol or outdoor astronomical time switch control.

~~7.1.1~~ Controls used to meet these requirements shall be certified by the manufacturer and listed in the Energy Commission directory.

7.2.4 Dimming Controls

§133(a) 3.

All outdoor signs with permanently connected lighting must be controlled with a dimmer that provides the ability to automatically reduce sign power by a minimum of 65 percent during nighttime hours.

The dimming control requirements do not apply to:

- Signs that are illuminated for less than one hour per day during daylight hours.
- Outdoor signs in tunnels and large covered areas that require illumination during daylight hours.
- Metal halide, high pressure sodium, cold cathode, and neon lamps used to illuminate signs or parts of signs.

Controls used to meet these requirements shall be certified by the manufacturer and listed in the Energy Commission directory.

7.2.5 Demand Responsive Electronic Message Center Controls

§133(a) 4.

All electronic message centers (EMCs) with a new connected lighting greater than 15 kW must have a control capable of reducing the lighting power by at least 30 percent upon receiving a demand response signal sent by the local utility.

The demand responsive controls do not apply to EMCs required by a health or life safety statue, ordinance, or regulation, including but not limited to exit signs and traffic signs. The requirements apply to all other types of signs.

Example 7-1~~1~~

Question

What are the mandatory sign lighting requirements for indoor signs?

Answer

The mandatory sign lighting requirements for indoor signs include:

1. An automatic time switch control that complies with the applicable requirements of Section 119.

2. Large indoor electronic message centers (EMC) (lighting power load > 15 kW) shall be capable of reducing lighting power ≥ 30% when receiving a demand response signal sent out by the local utility. However, EMCs required by a health or life safety statue, ordinance, or regulation are not required to be controlled by a demand response

Example 7-2

Question

What are the mandatory sign lighting requirements for outdoor signs?

Answer

The mandatory sign lighting requirements for outdoor signs include:

1. An automatic time switch control that complies with the applicable requirements of Section 119.
2. A photocontrol or outdoor astronomical time switch control.
3. All outdoor signs that are illuminated both day and night shall be controlled with a dimmer that provides the ability to automatically reduce sign power by a minimum of 65% percent during nighttime hours.
4. Large outdoor electronic message centers (EMC) (lighting power load > 15 kW) shall be capable of reducing lighting power ≥ 30% when receiving a demand response signal sent out by the local utility. However, EMCs required by a health or life safety statue, ordinance, or regulation are not required to be controlled by a demand response

Example 7-3

Question

Are there any situations when a photocontrol or outdoor astronomical time switch is not required for outdoor signs?

Answer

Yes, photocontrols or outdoor astronomical time switch controls are not required for outdoor signs in tunnels and large covered areas that require illumination during daylight hours.

DRAFT

Example 7-4

Question

How do I determine if an outdoor sign is illuminated both day and night so as to require the ability to automatically reduce sign power by a minimum of 65% percent during nighttime hours?

Answer

All outdoor signs that are illuminated at night, and for one of more hours per day during daylight hours, shall be considered to be illuminated both day and night.

Example 7-5

Question

Are there situations when an outdoor sign that is illuminated both day and night is not required to be controlled with a dimmer that provides the ability to automatically reduce sign power by a minimum of 65% percent during nighttime hours?

Answer

Yes, following are the two exceptions when an outdoor sign that is illuminated both day and night is not required to be controlled with a dimmer that provides the ability to automatically reduce sign power by a minimum of 65% percent during nighttime hours:

1. Outdoor signs in tunnels and large covered areas that require illumination during daylight hours.
2. Metal halide, high pressure sodium, cold cathode, and neon lamps used to illuminated signs or parts of signs.

Example 7-6

Question

What is the responsibility of the sign lighting designer with regard to using lighting controls that are certified by the Energy Commission and listed in the Energy Commission directories?

Answer

It is the responsibility of the manufacturer to certify the controls and to present the data to the Energy Commission so that it can be listed in the Energy Commission directories. It is the responsibility of the sign lighting designer to specify controls that have been certified and listed.

7.3 Sign Lighting Energy Requirements

The sign lighting energy Standards apply to all internally illuminated (cabinet) signs, externally illuminated signs, unfiltered light emitting diodes (LEDs), and unfiltered neon, whether used indoors or outdoors. Examples are internally illuminated and externally illuminated signs, including billboards, and off-premise and on-premise signs.

§148 does not apply to unfiltered incandescent lamps that are not part of an electronic message center (EMC), internally illuminated sign, or an externally illuminated sign. In addition, §148 does not apply to traffic signs or exit signs. Exit signs and traffic signs must meet the requirements of the *Appliance Efficiency Regulations (Title 20)*.

Even though the Title 24 Standards take into consideration Outdoor Lighting Zones (OLZs) for outdoor lighting applications like parking lots, the outdoor sign energy Standards are the same throughout the state and are independent of outdoor Lighting Zones.

§148 provides two alternative ways to comply with the sign Standards. Both alternatives encourage the use of readily available, cost-effective lighting technology. The two alternatives are as follows:

1. Alternative 1 - Performance Approach. This option sets the maximum power (watts) per ft^2 of sign. This approach allows sign makers maximum flexibility. It enables companies to introduce, develop and use any promising new lighting technology as long as it meets the power allowance. There are no constraints on the types of lighting equipment that a sign maker can use to comply under this approach, just as long the manufacturer does not exceed the maximum watts allowed for a sign of that size.

   The maximum allowed lighting power is determined according to §148(a), and wattage must be determined according to the applicable provision of §130(d). Section §130(d) establishes how to determine lighting wattages depending upon the type of lighting technology used.

2. Alternative 2 - Prescriptive Approach. This option uses specific, energy-efficient lighting technologies. This option provides a simple prescriptive approach for using these energy efficient technologies that are already being used by many in the sign industry.

   The specific energy efficient lighting technologies are listed in §148(b),

~~The lighting power used for indoor signs must be counted toward the indoor sign lighting power allowances. The exception is exit signs that use 5 watts or less per illuminated face. These are not required to be counted toward the sign lighting power allowance.~~

~~The Standards apply to unfiltered signs, and to the unfiltered section of internally or externally illuminated signs, with an exception. The Standards do not apply to unfiltered incandescent lamps that are not part of an electronic message center (EMC), an internally illuminated sign, or an externally illuminated sign.~~

DRAFT

7.3.1 ~~Component~~ Performance Approach

§148(a) 1.

The first alternative for internally illuminated signs (~~component~~ performance approach) sets a maximum power allowance of 12 W/ft^2 times the area of the sign face. For double-faced signs, only the area of a single face can be used to determine the allowed lighting power. However, for deep sign cabinets where the lamps are isolated by an opaque divider so that they illuminate only one sign face, or for irregular shaped signs where the faces are not parallel and the lamps are shielded by an opaque divider so that they illuminate only one sign face, then the total area of all of the sign faces can be used to determine the allowed lighting power. See Figure 7-4, Figure 7-5 and Figure 7-6.

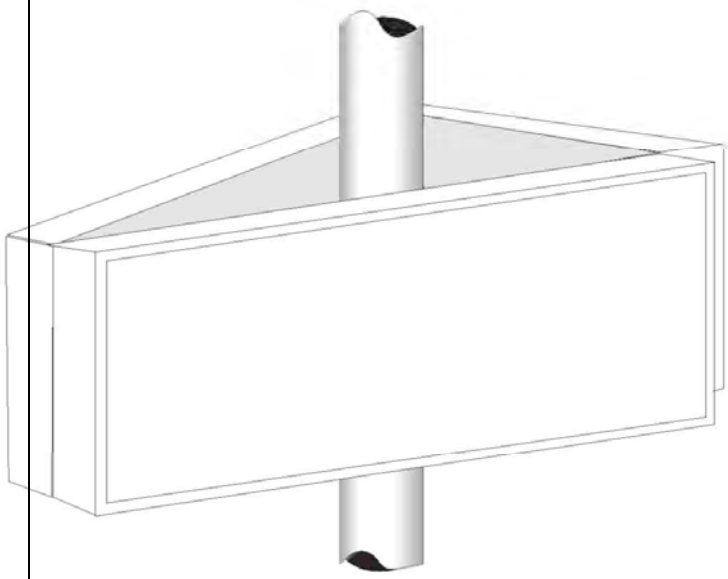

Figure 7-1 – Multi-faced sign
Include Area from Each Face When Separated by Opaque Divider

For externally illuminated signs the maximum allowed lighting power is 2.3 W/ft^2 times the area that is illuminated without obstruction or interference. One or more fixtures must illuminate the sign area. See Standards §148 (a) 2.

7.3.2 Prescriptive Approach~~h~~

§148(b)

The second alternative (prescriptive approach) requires that the sign be illuminated only with one or more of the following light sources, ~~(~~as applicable:~~) or that all light sources be powered by electronic ballasts with a fundamental output frequency not less than 20 kHz:~~

1. High pressure sodium.
2. Pulse start or ceramic metal halide lamps served by a ballast that has a minimum efficiency of 88%.
3. Pulse start metal halide lamps that are 320 watts or smaller, are not 250 watt or 175 watt lamps, and are served by a ballast that has a minimum efficiency of 80%.

   For pulse start and ceramic metal lamps, the Standards define ballast efficiency as the measured output wattage to the lamp divided by the measured operating input wattage when tested according to ANSI C82.6-2005

4. Neon or cold cathode lamps with transformer or power supply efficiency greater than or equal to following:

   ~~4.1~~A. A minimum efficiency of 75% when the transformer or power supply rated output current is less than 50 mA, or

   ~~4.2~~B. A minimum efficiency of 68% when the transformer or power supply rated output current is 50 mA or greater

   For neon and cold cathode lamps, the Standards define power supply efficiency as the ratio of the output wattage to the input wattage is at 100% tubing load.

5. Fluorescent lamps with a minimum color rendering index (CRI) of 80.
6. Light emitting diodes (LEDs) with a power supply having an efficiency of 80% or greater.

   For single voltage external power supplies that are designed to convert 120 volt AC input into lower voltage DC or AC output, and which have a nameplate output power less than or equal to 250 watts, comply with the applicable requirements of the Appliance Efficiency Regulations (Title 20). See Exception to §148 (b) 5.

7. Compact fluorescent lamps that do not contain a medium base socket (E24/E26).
8. Electronic ballasts with a fundamental output frequency not less than 20 kHz

No other light sources can be used on a sign complying under this option.

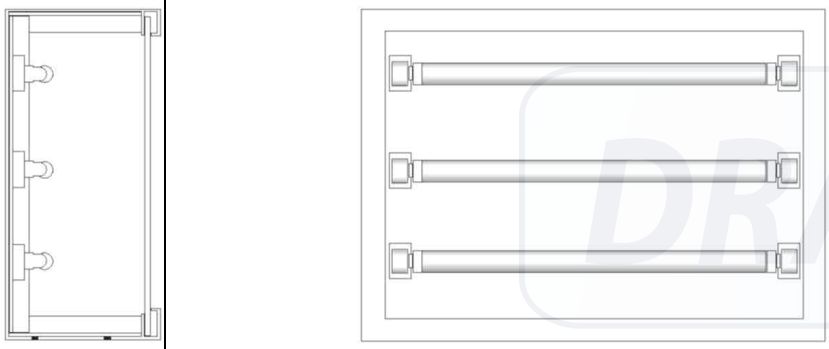

Figure 7-2 – Single-faced Internally Illuminated Cabinet Sign with Fluorescent Lamp and Translucent Face

DRAFT

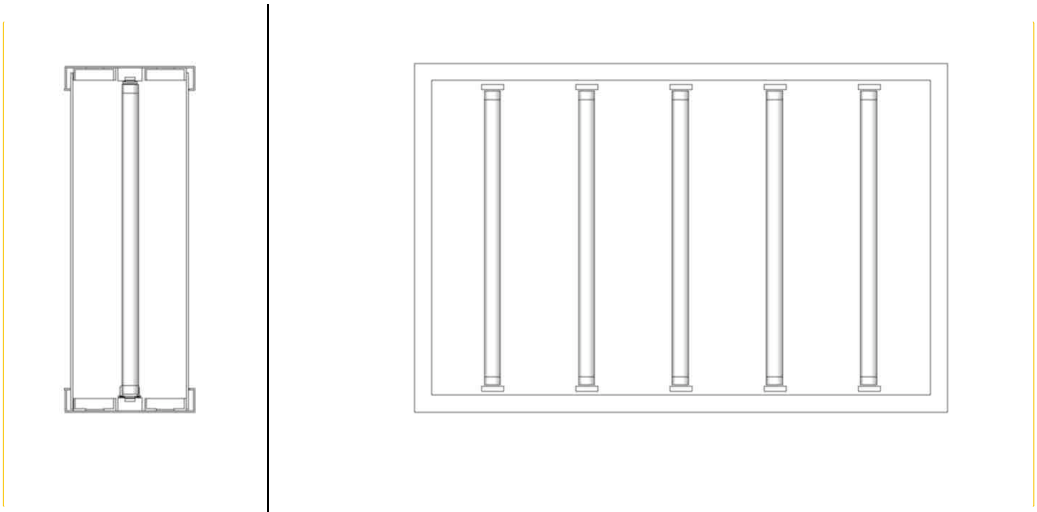

Figure 7-3 – Double-faced Internally Illuminated Cabinet Sign with Fluorescent Lamp and Translucent Faces

A sign may consist of multiple components, where some components are regulated, and some components are not regulated. For example, a single sign structure may have a regulated internally illuminated cabinet, plus regulated externally illuminated letters which are attached to a brick pedestal, plus unregulated unfiltered incandescent "chaser" lamps forming an illuminated arrow. For example, Figure 1-1 shows an arrow which is not part of an electronic message center (EMC) using incandescent lamps. If the lamps are not covered by a lens then only the control regulations (§133) apply to the sign. This type of unfiltered incandescent sign is not regulated by §148.

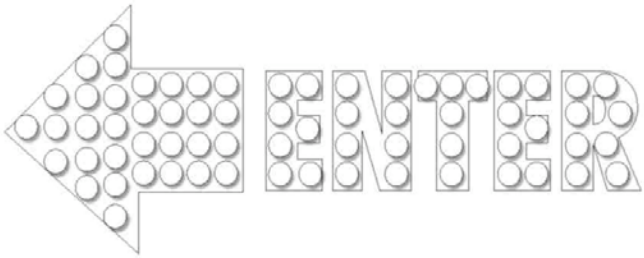

Figure 7-4 – Unfiltered Sign

Figure 7-2 shows an externally illuminated sign using flood lighting, which is regulated by the energy Standards. The power (wattage) used for these lighting components must comply with the performance approach, or use only lighting technologies approved according to §148(b).

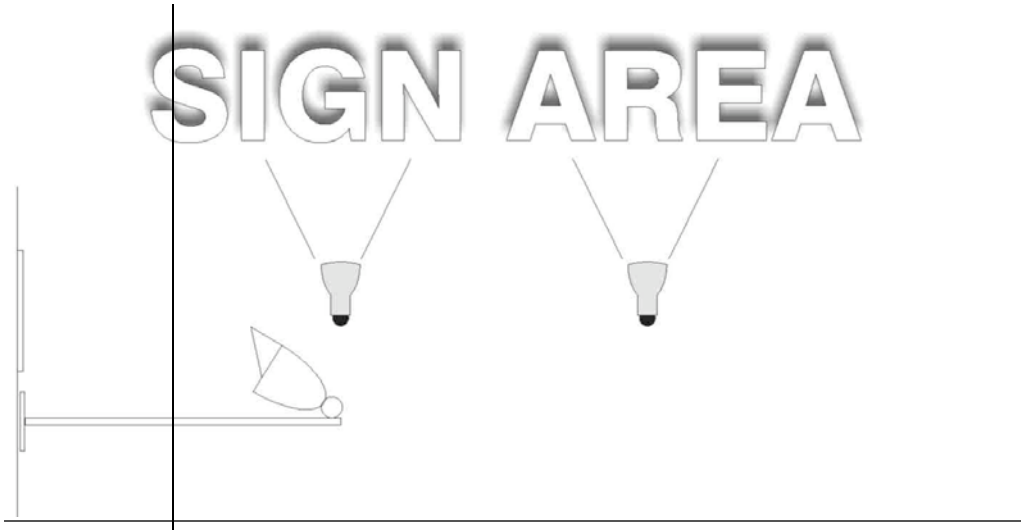

Figure 7-5 – Externally Illuminated Sign Using Flood Lighting

Example 7-7

Question

Can I use neon or cold cathode lights in my sign and comply with the Standards under Alternative 2 (Prescriptive Approach)?

Answer

Yes, neon and cold cathode lights are allowed under the prescriptive approach, provided that the transformers or power supplies have an efficiency of 75% or greater for output currents less than 50 mA and 68% or greater for output currents 50 mA or greater.

Example 7-8

Question

Do signs inside a theater lobby or other indoor environments need to comply with the sign requirements?

Answer

Yes, all internally and externally illuminated signs whether indoor or outdoor must comply with either the prescriptive or ~~component~~ performance approach.

Example 7-9

Question

My sign is equipped with both hardwired compact fluorescent lamps and incandescent lamps. Can my sign comply under the prescriptive approach?

Answer

No. Since your sign is not exclusively equipped with energy efficient technologies allowed under the prescriptive approach (incandescent sources are not allowed), it therefore must comply under the

~~component~~ performance approach. Your other option is to replace the incandescent sources with an energy efficient option that is permitted under the prescriptive approach, such as LED, pulse start or ceramic metal halide, or hard-wired CFL sources.

Example 7-10

Question

My sign has three parts, an internally illuminated panel sign equipped with electronic ballasts, ~~and two~~and two unfiltered 30 mA neon signs on top and bottom of the panel sign displaying an illuminated arrow equipped with power supplies with an efficiency of 76%. Does this sign comply with the prescriptive approach?

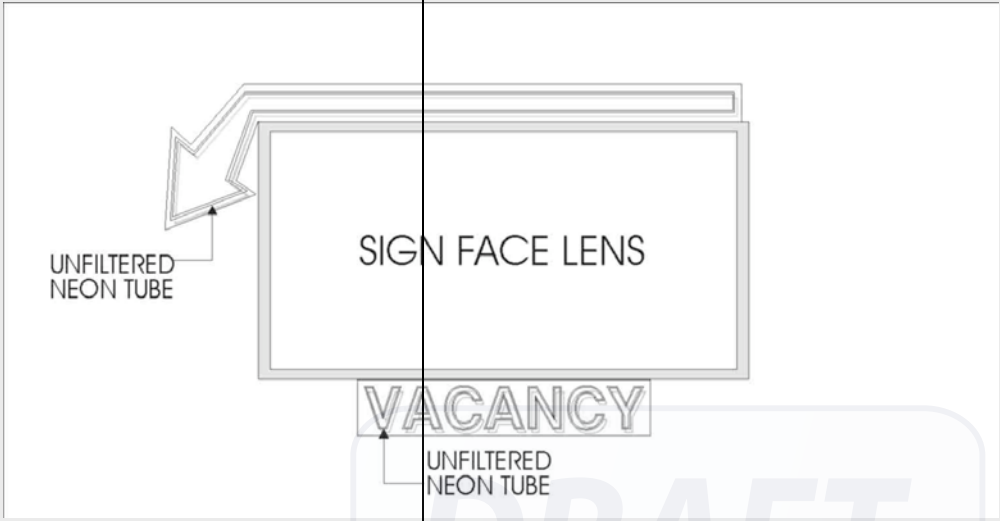

Answer

Yes, this sign is essentially made up of three different signs; an internally illuminated panel sign equipped with electronic ballast that complies with the prescriptive approach and two unfiltered neon signs with efficient power supplies also that comply with the prescriptive approach. Therefore the entire sign complies with the Standards.

Example 7-11

Question

Are signs required to comply with Outdoor Lighting Zone requirements?

Answer

No. Outdoor Lighting Zones do not apply in any way to signs. The Sign Energy Efficiency Standards are the same throughout the state; they do not vary with Outdoor Lighting Zones.

~~i.~~7.3.3 Additions and Alterations

§149(a) 1. and §149(b) ~~1. G.~~ H

All new signs regardless of whether they are installed in conjunction with an indoor or outdoor addition or alteration to a building or outdoor lighting system

must meet the requirements for newly installed equipment, as required by §119, §130, §133 and §148.

~~ii.~~7.3.4 Sign Alterations

§149(b)-1- ~~J.~~K

Existing indoor and outdoor internally illuminated and externally illuminated signs that are altered as specified by §149(b)-1-K are required to meet the requirements of §148 of the Standards. Altered components of existing indoor and outdoor internally and externally illuminated signs must also meet the requirements of §130-(d)-2, if ~~Component~~ Performance Approach is used for compliance.

The lighting power requirements (either prescriptive or ~~component~~ performance) are triggered by alterations to existing internally or externally illuminated signs when any of the following occurs as result of the alteration as specified in §149(b)1:

- The connected lighting power is increased.
- More than 50% of the ballasts are replaced and rewired.
- The sign is relocated to a different location on the same site or on a different site.

The lighting power requirements are not triggered when just the lamps are replaced, the sign face is replaced or the ballasts are replaced (without rewiring).

These signs must comply with either alternative (a)~~1~~ or alternative (b)~~2~~ of §148. Sign ballast rewiring that triggers the alterations requirements generally involves rewiring from parallel to series or visa versa, or when a ballast(s) is relocated within the same sign requiring relocating the wires. This does not include routine in-place ballast replacements.

Example 7-12

Question

We are replacing 60% of the ballasts in a sign. Must we replace the remaining ballasts in the sign in order to comply with the Standards?

Answer

It depends. If more than 50% of the ballasts are being replaced, and the replacement involves rewiring the ballasts, then the alteration requirements apply to the whole sign. If more than 50% of the ballasts are being replaced during regular maintenance, and the ballasts are not being rewired, then the sign is not required to meet the Standards requirements. However, when existing wiring will allow the direct replacement of a magnetic ballast with a high efficiency high frequency electronic fluorescent ballast, even though Standards do not require the electronic ballast, the sign owner is encouraged to replace the magnetic ballasts with an electronic ballast.

Example 7-13

Question

I have a strip mall full of signs. Must I immediately bring all of these signs into energy efficiency compliance even if I'm not going to alter them?

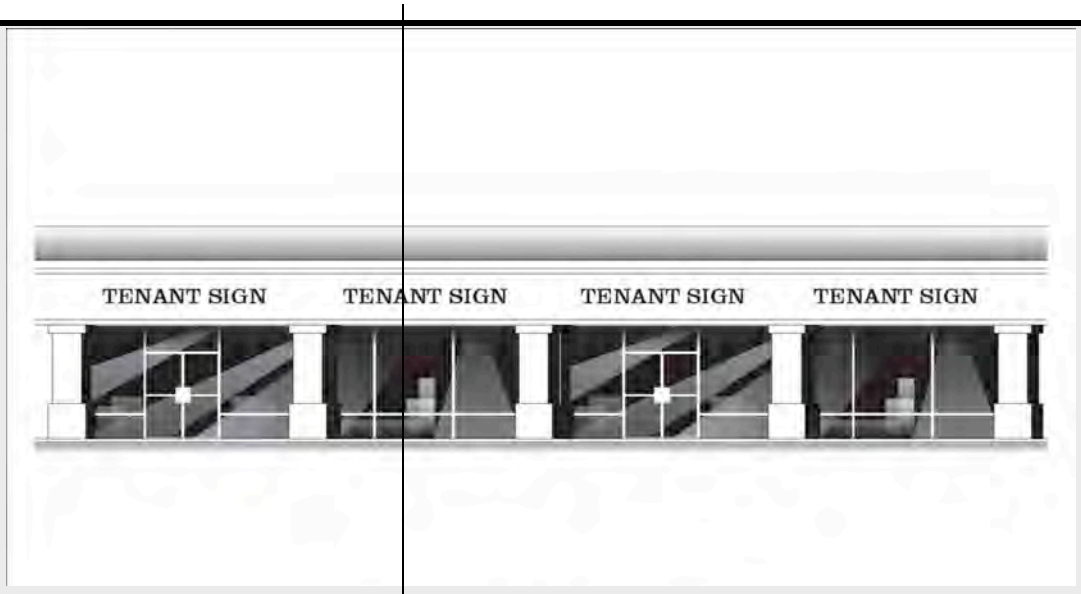

Answer

No, only those signs in which at least 50% of the ballasts are replaced and rewired, or those signs that are moved to a new location (on the same property or different property) must comply with either Alternative 1 or 2 of §148. Also, all newly installed signs must also comply with either Alternative 1 or 2.

7.4 Sign Lighting Plan Check Documents

At the time a building permit application is submitted to the building department, the applicant also submits plans and energy compliance documentation. This section describes the required forms and procedures for documenting compliance with the sign lighting requirements of the Standards. It does not describe the details of the requirements; these are presented in Section 1.1.3, Summary of Requirements. The following discussion is addressed to the designer preparing construction documents and compliance, and to the building department plan checkers who are examining those documents for compliance with the Standards.

For the 2005 Standards, the sign lighting compliance forms were located with a set of outdoor lighting compliance forms (OLTG). However, for the 2008 Standards, the sign lighting compliance forms are stand alone forms (SLTG). There are only two parts to the 2008 sign lighting compliance forms, which can be printed as a single page, double sided form for most sign lighting applications.

The use of each part of the sign lighting compliance form is described below, and complete instructions for each part is presented in the following subsection

~~1.1.1~~7.4.1 SLTG-C: Certificate of Compliance (Sign Lighting)

The SLTG-C Certificate of Compliance form is in two parts. A copy of these forms must be submitted to the building department at the time of building permit application. With building department approval, the applicant may use alternative formats of these forms (rather than the official Energy Commission forms), provided the information is the same and in a similar format.

A. SLTG-C Part 1 of 2 Project Description and Mandatory Sign Lighting Controls

1. PROJECT NAME is the title of the project.
2. PHASE OF CONSTRUCTION indicates the status of the sign lighting project described in the documents.
   a. NEW CONSTRUCTION should be checked for all new sign lighting projects. See Section 1.1.1 gives the Summary of Requirements.
   b. ADDITION should be checked for an addition which is not treated as a sign lighting project, which uses are described in Section 1.3.3, Sign -Additions and Alterations.
   c. ALTERATION should be checked for alterations to existing outdoor lighting or sign lighting systems. See Section Sign Additions and Alterations. .
3. FUNCTION TYPE indicates if the signs are outdoor or indoor signs.
4. DATE is the date of preparation of the compliance submittal package. It should be on or after the date of any plans, and on or before the date of the building permit application.
5. PROJECT ADDRESS is the address of the project as shown on any plans and as known to the building department.
6. COMPLIANCE METHOD USED indicates if the method of compliance used is the Maximum Allowed Lighting Power (Performance Approach), or the Alternate Lighting Sources (Prescriptive Approach). This information must match the information listed in SLTG-C, Part 2 of 2.
7. MANDATORY SIGN LIGHTING CONTROLS is a checklist to verify that all mandatory controls have been installed.
   a. Check yes or no: All signs with permanently connected lighting are controlled with an automatic time switch control that complies with the applicable requirements of §119
   b. Check yes or no to each of the following:
      i. All outdoor signs are controlled with a photo control or outdoor astronomical time switch control.
      ii. A photo control or outdoor astronomical time switch control is not required because the outdoor signs are in tunnels or large covered areas that require illumination during daylight hours.
   c. Check yes or no to each of the following:

i. All outdoor signs are controlled with a dimmer that provides the ability to automatically reduce sign power by a minimum of 65 percent during nighttime hours.

ii. Outdoor signs are not required to be controlled with a dimmer that provides the ability to automatically reduce sign power by a minimum of 65 percent during nighttime hours because the signs are illuminated for less than one hour per day during daylight hours.

iii. Outdoor signs are not required to be controlled with a dimmer that provides the ability to automatically reduce sign power by a minimum of 65 percent during nighttime hours because the signs are in tunnels or large covered areas that require illumination during daylight hours.

iv. Outdoor signs are not required to be controlled with a dimmer that provides the ability to automatically reduce sign power by a minimum of 65 percent during nighttime hours because only metal halide, high pressure sodium, cold cathode, or neon lamps are used to illuminated signs or parts of signs.

d. Check yes, no, or not applicable (N/A) to each of the following:

i. An Electronic Message Center (EMC) having a new connected lighting power load greater than 15 kW has a control installed is capable of reducing the lighting power by a minimum of 30 percent when receiving a demand response signal that is sent out by the local utility.

ii. A control is not required to reduce the lighting power by a minimum of 30 percent when receiving a demand response signal that is sent out by the local utility because the EMC is required by a health or life safety statue, ordinance, or regulation, including but not limited to exit signs and traffic signs.

8. STATEMENT OF COMPLIANCE is signed by the person responsible for preparation of the plans for the sign lighting project. This person is also responsible for the energy compliance documentation, even if the actual work is delegated to someone else (the Documentation Author described below). It is necessary that the compliance documentation be consistent with any plans.

   The Business and Professions Code governs who is qualified to prepare plans, and therefore to sign this statement; check the appropriate box that describes the signer's eligibility. See additional information below.

9. DOCUMENTATION AUTHOR is the person who prepared the energy compliance documentation. This may or may not be the principal designer (it may be a person specializing in energy standards compliance work). This person is not subject to the Business and Profession's Code. The person's telephone number is given to facilitate response to any questions that arise.

10. PRINCIPAL DESIGNER – SIGN LIGHTING is the person responsible for the preparation of lighting plans, one of two people who sign the

STATEMENT OF COMPLIANCE (see below). The person's telephone number is given to facilitate response to any questions that arise.

Applicable sections from the Business and Professions Code (based on the edition in effect as of August 2000), referenced on the Certificate of Compliance, are provided below:

5537. *(a) This chapter does not prohibit any person from preparing plans, drawings, or specifications for any of the following:*

(1) Single-family dwellings of woodframe construction not more than two stories and basement in height.

(2) Multiple dwellings containing no more than four dwelling units of woodframe construction not more than two stories and basement in height. However, this paragraph shall not be construed as allowing an unlicensed person to design multiple clusters of up to four dwelling units each to form apartment or condominium complexes where the total exceeds four units on any lawfully divided lot.

(3) Garages or other structures appurtenant to buildings described under subdivision (a), of woodframe construction not more than two stories and basement in height.

(4) Agricultural and ranch buildings of woodframe construction, unless the building official having jurisdiction deems that an undue risk to the public health, safety, or welfare is involved.

(b) If any portion of any structure exempted by this section deviates from substantial compliance with conventional framing requirements for woodframe construction found in the most recent edition of Title 24 of the California Code of Regulations or tables of limitation for woodframe construction, as defined by the applicable building code duly adopted by the local jurisdiction or the state, the building official having jurisdiction shall require the preparation of plans, drawings, specifications, or calculations for that portion by, or under the responsible control of, a licensed architect or registered engineer. The documents for that portion shall bear the stamp and signature of the licensee who is responsible for their preparation. Substantial compliance for purposes of this section is not intended to restrict the ability of the building officials to approve plans pursuant to existing law and is only intended to clarify the intent of Chapter 405 of the Statutes of 1985.

5537.2. *This chapter shall not be construed as authorizing a licensed contractor to perform design services beyond those described in Section 5537 or in Chapter 9 (commencing with Section 7000), unless those services are performed by or under the direct supervision of a person licensed to practice architecture under this chapter, or a professional or civil engineer licensed pursuant to Chapter 7 (commencing with Section 6700) of Division 3, insofar as the professional or civil engineer*

practices the profession for which he or she is registered under that chapter.

However, this section does not prohibit a licensed contractor from performing any of the services permitted by Chapter 9 (commencing with Section 7000) of Division 3 within the classification for which the license is issued. Those services may include the preparation of shop and field drawings for work which he or she has contracted or offered to perform, and designing systems and facilities which are necessary to the completion of contracting services which he or she has contracted or offered to perform.

However, a licensed contractor may not use the title "architect," unless he or she holds a license as required in this chapter.

5538. *This chapter does not prohibit any person from furnishing either alone or with contractors, if required by Chapter 9 (commencing with Section 7000) of Division 3, labor and materials, with or without plans, drawings, specifications, instruments of service, or other data covering such labor and materials to be used for any of the following:*

(a) For nonstructural or nonseismic storefronts, interior alterations or additions, fixtures, cabinetwork, furniture, or other appliances or equipment.

(b) For any nonstructural or nonseismic work necessary to provide for their installation.

(c) For any nonstructural or nonseismic alterations or additions to any building necessary to or attendant upon the installation of those storefronts, interior alterations or additions, fixtures, cabinetwork, furniture, appliances, or equipment, provided those alterations do not change or affect the structural system or safety of the building.

6737.1. *(a) This chapter does not prohibit any person from preparing plans, drawings, or specifications for any of the following:*

(1) Single-family dwellings of woodframe construction not more than two stories and basement in height.

(2) Multiple dwellings containing no more than four dwelling units of woodframe construction not more than two stories and basement in height. However, this paragraph shall not be construed as allowing an unlicensed person to design multiple clusters of up to four dwelling units each to form apartment or condominium complexes where the total exceeds four units on any lawfully divided lot.

(3) Garages or other structures appurtenant to buildings described under subdivision (a), of woodframe construction not more than two stories and basement in height.

(4) Agricultural and ranch buildings of woodframe construction, unless the building official having jurisdiction deems that an undue risk to the public health, safety or welfare is involved.

(b) If any portion of any structure exempted by this section deviates from substantial compliance with conventional framing requirements for woodframe construction found in the most recent edition of Title 24 of the California Administrative Code or tables of limitation for woodframe construction, as defined by the applicable building code duly adopted by the local jurisdiction or the state, the building official having jurisdiction shall require the preparation of plans, drawings, specifications, or calculations for that portion by, or under the direct supervision of, a licensed architect or registered engineer. The documents for that portion shall bear the stamp and signature of the licensee who is responsible for their preparation.

6737.3. *A contractor, licensed under Chapter 9 (commencing with Section 7000) of Division 3, is exempt from the provisions of this chapter relating to the practice of electrical or mechanical engineering so long as the services he or she holds himself or herself out as able to perform or does perform, which services are subject to the provisions of this chapter, are performed by, or under the responsible supervision of a registered electrical or mechanical engineer insofar as the electrical or mechanical engineer practices the branch of engineering for which he or she is registered.*

This section shall not prohibit a licensed contractor, while engaged in the business of contracting for the installation of electrical or mechanical systems or facilities, from designing those systems or facilities in accordance with applicable construction codes and standards for work to be performed and supervised by that contractor within the classification for which his or her license is issued, or from preparing electrical or mechanical shop or field drawings for work which he or she has contracted to perform. Nothing in this section is intended to imply that a licensed contractor may design work that is to be installed by another person.

- The Energy Hotline (see above) can verify certification of appliances not found in the above directories.
- The Energy Commission's Web Site includes listings of energy efficient appliances for several appliance types. The web site address is http://www.energy.ca.gov/efficiency/appliances/.
- The complete appliance databases can be downloaded from the Energy Commission's Internet FTP site (ftp://sna.com/pub/users/efftech/appliances). This requires database software (spreadsheet programs cannot handle some of the larger files). To use the data, a user must download the database file (or files), download a brand file and a manufacturer file and then

decompress these files. Then download a description file that provides details on what is contained in each of the data fields. With these files, and using database software, the data can be sorted and manipulated.

B. SLTG-C Part 2 of 2 Compliance Method

Part 2 of 2 of the SLTG-C documents the compliance of sign lighting in accordance with §148.

There are two compliance options for signs. Alternative 1 is based on complying with lighting power allowances per square foot of sign. Alternative 2 is based on utilizing only specific lighting technologies. Unfiltered signs (signs consisting of bare incandescent lamps not a part of an electronic message center, internally or externally illuminated sign are not regulated). For hybrid signs, consisting of one or more components of internally illuminated, externally illuminated, and unfiltered components, each regulated component shall comply with Standards separately.

1. PROJECT NAME is the title of the project. This name must match the information listed on SLTG-C Part 1 of 2.
2. PHASE OF CONSTRUCTION must match the information listed on SLTG-C Part 1 of 2.
3. FUNCTION TYPE must match the information listed on SLTG-C Part 1 of 2
4. TOTAL SIGN AREA is the total sign areas of all signs listed on this Certificate Of Compliance as shown at the bottom of column C.
5. DATE must match the information listed on SLTG-C Part 1 of 2
6. PROJECT ADDRESS must match the information listed on SLTG-C Part 1 of 2
7. COMPLIANCE METHOD

   Fill in COLUMN A and COLUMN B for all signs, regardless of compliance method

   a. *COLUMN A - The code for each sign type, as it is described by name, type or symbol on the plans.*
   b. *COLUMN B – a description of the sign, where the sign is located, and/or where the sign(s) can be located on the plans.*

   Fill In COLUMNS C through H only for signs complying with the Maximum Allowed Lighting Power method.

   c. *COLUMN C - The area of the sign in square feet. Total all rows on the bottom row of this table.*
   d. *COLUMN D - List "I" if the sign is internally illuminated, and list "E" if the sign is externally illuminated. If a sign has both internally and*

DRAFT

externally illuminated components, enter the sign components on separate lines.

e. *COLUMN E - If the sign or sign component is internally illuminated, enter "12" watts per square foot, if the sign or sign component is externally illuminated, enter "2.3" watts per square foot.*

f. *COLUMN F - Calculate the allotted watts (COLUMNS C X E).*

g. *COLUMN G – Calculate the total installed watts in the sign, as determined according to the applicable provisions of §130(d).*

h. *COLUMN H - Enter "Y" if COLUMN F is smaller than COLUMN G, the sign complies under the Maximum Allowed Lighting Power method. If COLUMN G is larger than COLUMN F, enter "N", the sign does not comply using this method. (However, the sign may still comply using the Alternative Light Source method if only approved technologies are used).*

Fill In COLUMN I only for signs complying with the Alternative Light Source method.

i. *COLUMN I – List numbers 1 through 10 as appropriate for each Alternative Light Source installed in the signs. List all numbers that apply from the list of compliant technologies shown below, for the sign shown on that row of the table:*

1. High pressure sodium lamps
2. Pulse start or ceramic metal halide lamps served by a ballast with ≥88% efficiency
3. Pulse start metal halide lamps that are ≤ 320 watts, are not 250 watt or 175 watt lamps, and are served by a ballast with ≥80% efficiency
4. Neon or cold cathode lamps with transformer or power supply efficiency ≥ 75% with rated output current < 50 mA
5. Neon or cold cathode lamps with transformer or power supply efficiency ≥ with rated output current ≥ 50 mA
6. Fluorescent lamps with a minimum color rendering index (CRI) of 80
7. Light emitting diodes (LEDs) with a power supply with ≥ 80% efficiency
8. Single voltage LED external power supplies designed to convert 120 volt AC input into lower voltage DC or AC output, having a nameplate output power less than or equal to 250 watts, and certified to the Energy Commission as complying with the applicable requirements of the Appliance Efficiency Regulations (Title 20)
9. Compact fluorescent lamps that do not contain a medium screw base sockets (E24/E26)
10. Electronic ballasts with a fundamental output frequency ≥ 20 kHz

DRAFT

~~1.2~~7.5 *Lighting Inspection*

The electrical building inspection process for energy compliance is carried out along with the other building inspections performed by the building department. The inspector relies upon the plans and upon the SLTG-C Certificate of Compliance form.

~~*1.1 Reference/Glossary*~~

~~The following are terms that are used in this section, defined in Joint Appendix I and have application to compliance with the sign lighting requirements of the Standards.~~

- ~~Electronic message center~~
- ~~Filtered~~
- ~~UL~~
- ~~Unfiltered~~

DRAFT

8. Refrigerated Warehouses

8.1 Introduction

This section of the nonresidential compliance manual addresses refrigerated warehouses. Since regulation of refrigerated warehouses is new for the 2008 Standards (§126), a separate section covering the majority of the refrigerated warehouse requirements has been provided. The Standards described in this section of the manual address refrigerated space insulation levels, under slab heating in freezers, evaporator fan controls, compressor part load efficiency in specific applications, condenser sizing, condenser fan power and condenser fan controls. Other sections of the Manual address interior lighting power (Chapter 5), cool roofs (Section 3.4), and outdoor lighting power (Chapter r), which may be installed in conjunction with refrigerated warehouses.

8.1.1 Organization and Content

This section of the manual focuses on Standards provisions unique to refrigerated warehouses. All buildings regulated under Title 24 must also comply with the General Provisions of the Standards (§100 – §102, §110 – §111) and requirements addressing Additions and Alterations (§149). These topics are generally addressed in Sections 1 and 2 of the Manual and in the Reference Appendices.

8.1.2 Mandatory Measures and Compliance Approaches

The energy efficiency requirements for refrigerated warehouses are all mandatory. There are no prescriptive requirements or performance compliance paths for refrigerated warehouses. Since the provisions are all mandatory, there are no tradeoffs allowed between the various requirements. The application must demonstrate compliance with each of the mandatory measures. Exceptions to each mandatory requirement where provided are described in each of the mandatory measure sections below.

8.1.3 Scope and Application

§126

Section 126 of the 2008 Standards addresses the energy efficiency of refrigerated spaces within buildings, including both coolers and freezers. Coolers are defined as refrigerated spaces cooled between 32°F (0 °C) and 55°-F (13 °C). Freezers are defined as refrigerated spaces cooled below 32°F (0 °C). The 2008 Title 24

Building Energy Efficiency Standards do not address walk-in refrigerators and freezers, as these are covered by the Title 20 Appliance Efficiency Regulations. A ~~walk~~ walk-in refrigerator or freezer is defined as a refrigerated space less than 3000 ft^2 ~~square feet~~ in floor area.

Additionally, areas within refrigerated warehouses designed solely for the purpose of quick chilling or quick freezing of products are exempt from the Standards. Quick chilling and freezing spaces are defined as spaces with a design refrigeration evaporator capacity of greater than 240 Btu/hr-ft^2 of floor space, which is equivalent to 2 tons ~~of refrigeration~~ /per 100ft^2 of floor space, at conditions prevailing during system operation (applied conditions) ~~at the applied conditions~~.

The intent of the Standards is to regulate storage space, not quick chilling space or process equipment. Recognizing that there is often a variety of space types and equipment connected to a particular suction group in a refrigerated warehouse, it is not always possible to ~~address~~identify compressor plant equipment that serve~~serving~~ the storage space only. It would be outside the intent of the Standards to apply the compressor plant requirements to an industrial process that is not covered by the Standards, while ~~when~~ a small storage space is also attached to the suction group. Similarly, it would be outside of the intent of the Standards to exclude a compressor plant connected to a suction group serving a large storage space covered by the Standards on the basis of a small process cooler or quick chill space also connected to the same suction group. For the purposes of compliance with the Standards, the compressor plant requirements apply when 80 percent or more of the design ~~capacity~~load connected to the suction group is to serve storage space(s). A suction group refers to one or more compressors that are connected to one or more refrigeration loads, that all operate at a common suction pressure.

A variety of space types and processes may be served by a compressor plant at different suction temperatures. When all of these compressors share a common condenser loop, it is impossible to address only the equipment serving the long-term storage spaces. For purposes of compliance with the Standards, the provisions addressing condensers apply when the total design load of all long-term storage spaces served by compressors using a common condenser loop is greater than or equal to 80 percent of the total design load.

Example 8-1

Question

A space within a refrigerated warehouse is used for quick chilling of product during a portion of the season, and long term storage for the remainder of the season. The design evaporator capacity is 300 Btu/hr-square foot at the applied conditions. Is this space required to meet the Standards?

Answer

Yes. While the design evaporator capacity exceeds 240 Btu/hr- ft^2, this space is not used ~~soley~~solely for quick chilling and therefore must comply.

~~The intent of the Standards is to regulate storage space, not quick chilling space or process equipment. Recognizing that there is often a variety of space types and equipment connected to a particular suction group in a refrigerated warehouse, it is not always possible to address compressor plant equipment serving the storage space only. It would be outside the intent of the Standards to apply the compressor plant requirements to an industrial process when a small storage space is also attached to the suction group. Similarly, it would be outside of the intent of the Standards to exclude a compressor plant connected to a suction group serving a large storage space on the basis of a small process cooler or quick chill space also connected to the same suction group. For the purposes of compliance with the Standards, the compressor plant requirements apply when 80 percent or more of the design capacity connected to the suction group is storage space.~~

~~A variety of space types and processes may be served by a compressor plant at different suction temperatures. When all of these compressors share a common condenser loop, it is impossible to address only the equipment serving the long term storage spaces. For purposes of compliance with the Standards, the provisions addressing condensers apply when the total design load of all long term storage spaces served by compressors using a common condenser loop is greater than or equal to 80 percent of the total design load, then the condenser provisions apply.~~

Example 8-2

Question

A new compressor plant serves both storage and quick chilling space. The design capacity of the storage space is 500 tons. The design capacity of the quick chilling space is 50 tons. Is the compressor plant required to meet the requirements of the Standards?

Answer

Yes. Since more than 80 percent of the design capacity of the system is serving storage space, the compressor plant requirements apply.

8.2 Building Envelope

This part of the refrigerated warehouse section (§126(a) and §126(b)) addresses mandatory requirements for refrigerated space insulation R-value and ~~underslab~~under slab heating.

8.2.1 Opaque Envelope Insulation

§126(a)	

The minimum ~~aged~~ R-values of insulation applied to the enclosing surfaces of cold storage and frozen storage spaces are shown in Table 8-1.

Table 8-1 Refrigerated Warehouse ~~Aged~~ Insulation Values

SPACE	SURFACE	MNIMUM ~~AGED~~ R-VALUE (°F·hr·ft^2/Btu)
Frozen Storage	Roof/Ceiling	R-36
	Wall	R-36
	Floor	R-36
Cold Storage	Roof/Ceiling	R-28
	Wall	R-28

The R-values shown in Table 8-1 apply to all surfaces enclosing a refrigerated space, including refrigerated spaces adjoining conditioned spaces, other refrigerated spaces, unconditioned buffer spaces and the outdoors. The R-values are the nominal insulation ~~aged~~ R-values ~~-~~and do not include the R-value of other building materials or internal or external "film" resistances. The R-values shown in Table 8-1 are independent of the thermal mass of the enclosing surface.

Example 8-3

Question

A refrigerated warehouse designed to store produce at 45°F (7 °C) is constructed from tilt-up concrete walls and concrete roof sections. What is the minimum R-value of the wall and roof insulation?

Answer

Since the storage temperature is between 32°F (0 °C) and 55°F (13 °C), the space is defined as cold storage. The minimum R-value of the wall and roof insulation according to Table 8-1 is R-28.

DRAFT

Example 8-4

Question

A refrigerated warehouse is constructed of a wall section consisting of 4 inches of concrete, 6 inches of medium density (2 lb/ft^3)foam insulation and another 4 inches of concrete. The nominal ~~aged~~ R-value of the foam insulation is R-5.8 per inch. What is the R-value of this wall section for code compliance purposes?

Answer

The insulating value of the concrete walls is ignored. The ~~aged~~ R-value of this wall section for code compliance purposes is based on the 6 inches of foam insulation at R-5.8 per inch, or R-34.8.

8.2.2 Underfloor Heating

§126(b)

Underfloor heating systems should be used under frozen storage warehouses to prevent soil freezing and expansion. Underfloor heating can be electric resistance, forced air, or heated fluid; however, u~~U~~nderfloor heating systems utilizing electric resistance heating elements are not permitted unless they are thermostatically controlled and disabled during the summer on-peak period. The summer on peak period is defined by the supplying electric utility, but generally occurs from 12 PM to 6 PM weekdays during the months of May through October. The control system used to control any electric resistance underfloor heating elements must turn the elements off during this period. The control system used to control electric resistance underfloor heating elements must be shown on the building drawings and the control sequence demonstrating compliance with this requirement must be documented on the drawings and in the control system specifications.

8.3 Mechanical Systems

8.3.1 Overview

This section addresses mandatory requirements for mechanical systems serving refrigerated spaces. Mechanical system components addressed by the standards include evaporators (air units), compressors, condensers, and refrigeration system controls. The requirements for each of these components are described in the following sections.

The requirements apply to all system and component types with the exception of the specific exclusions noted in the 2008 Standards (§126). The following figures identify some of the common system and component configurations that fall under the 2008 Standards (§126).

Figure 8-1 is a schematic of a single stage system with direct expansion (DX) evaporator coils. Figure 8-2 identifies a single stage system with flooded evaporator coils, while Figure 8-3 shows a single stage system with pump recirculated evaporators. Figure 8-4 is a schematic of a typical two-stage system with an intercooler between the compressor stages.

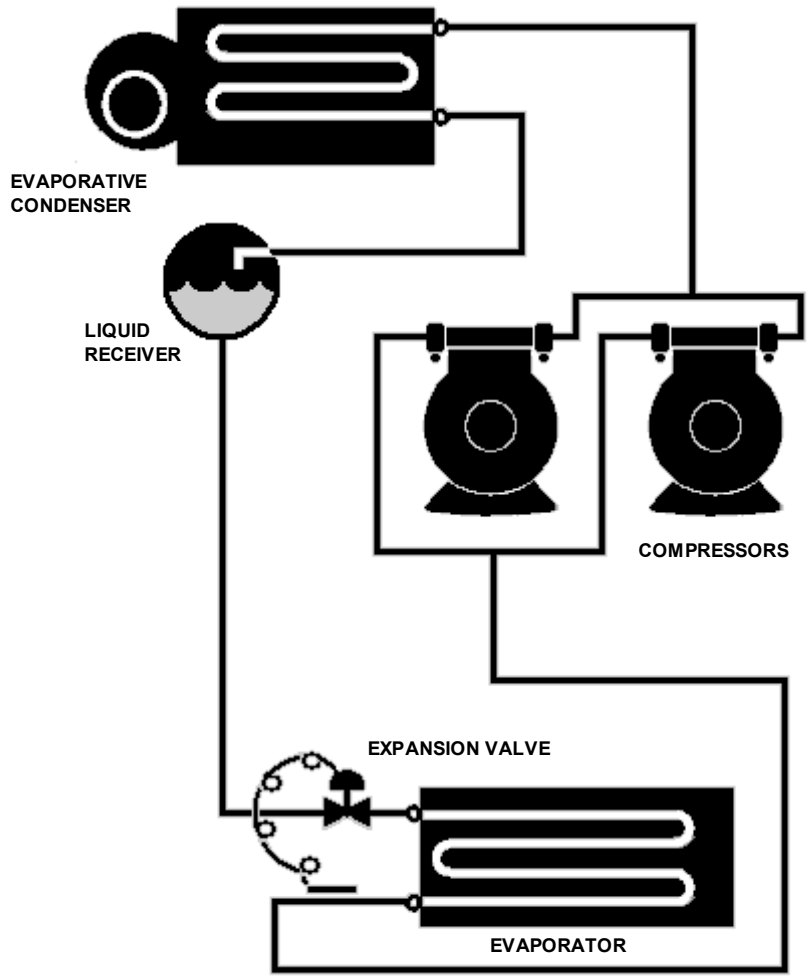

Figure 8-1. Single Stage System with ~~Direct Expansion~~DX Evaporator Coil

DRAFT

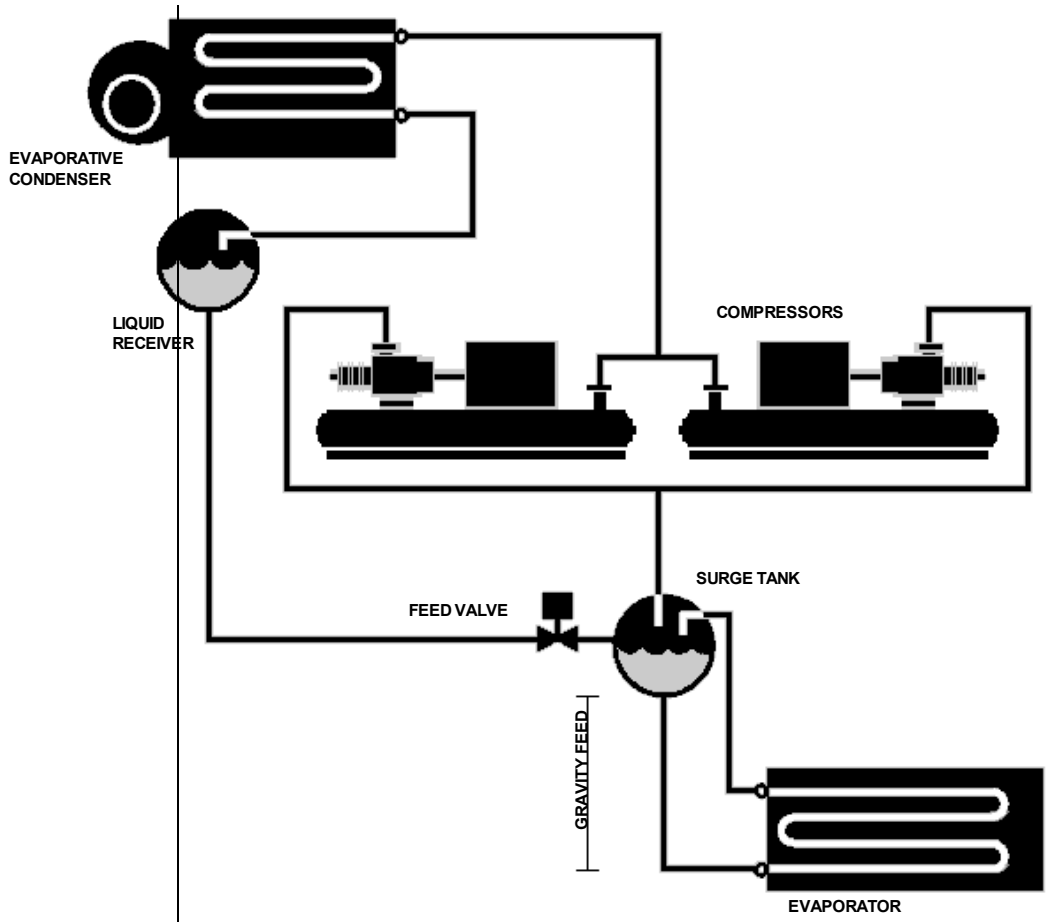

Figure 8-2. Single Stage System with Flooded Evaporator Coil

DRAFT

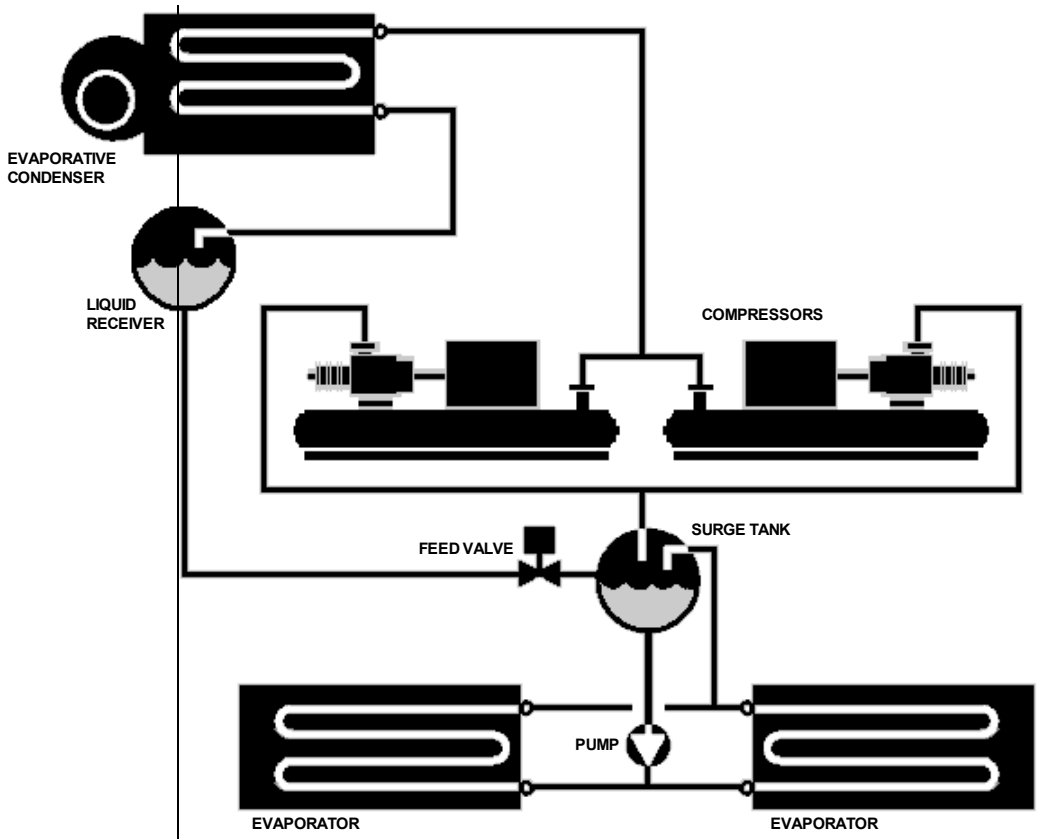

Figure 8-3. Single Stage System with Pump Recirculated Evaporator Coils

DRAFT

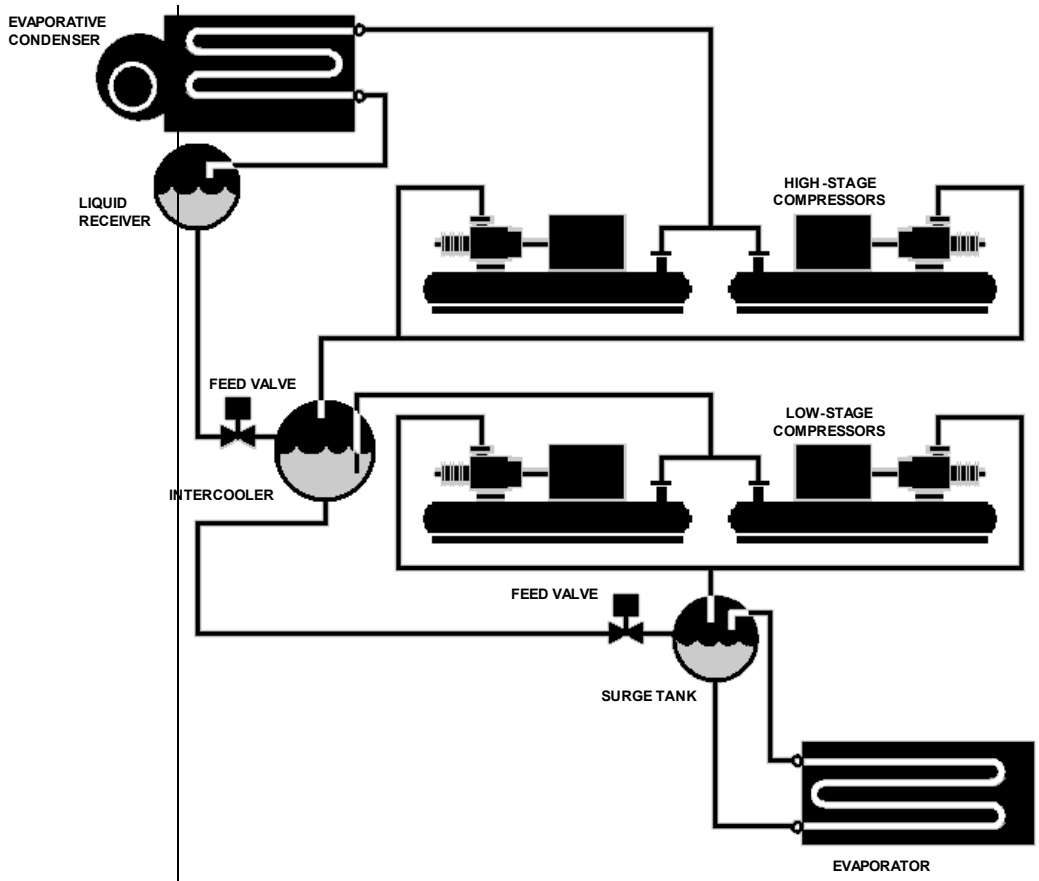

Figure 8-4. Two--Stage System with Flooded Evaporator Coil

8.3.2 Evaporators

§126(c)

Fan powered evaporators used in coolers and freezers have limits on the fan motor type for small fan motors and requirements for fan speed control. Single phase fan motors less than 1 horsepower operated at less than 460 volts must be electronically commutated. This requirement is designed to reduce fan power in small evaporator fans, and is consistent with the requirements of the Title 20 Appliance Efficiency Regulations. Documentation must be submitted to the code enforcement authority that documents the use of electronically commutated motors in the fan powered evaporators containing single phase fan motors smaller than 1 hp.

In addition to the requirement for electronically commutated motors in small evaporator fans, the speed of all evaporator fans must be controlled in response to space conditions using a continuously variable control method. Two-speed control is not an acceptable method. Units are generally controlled based on local space temperature, but other conditions, such as relative humidity, uniformity of air flow, and product temperature may also apply. Maintaining

product quality should always be the first consideration. In most cases, variable frequency drives are used to control the speed of evaporator fan motors, although controllers designed to vary the speed of electronically commutated motors may be used to control these types of motors.

The fan speed must be controlled according to space conditions. A common strategy for controlling fan speed is to use a controller that measures the difference between the space temperature and the space temperature setpoint, and sends a control signal proportional to the temperature difference. A variable frequency drive is used to reduce fan speed as the space temperature setpoint is met. There is no requirement for minimum speed (~~ on~~ how much the speed of the fan is reduced when~~once~~ the room is at setpoint temperature)~~ is met~~, although variable speed control of air unit fans has been successfully ~~and reliably implemented~~used with minimum speeds of 80~~%~~ percent or lower on direct expansion coils ~~with minimum speeds of 80%~~ and 70~~%~~ percent or lower on flooded or recirculated coils~~ with minimum speeds of 70%.~~~~although reductions to 30% to 50% of the design fan speed are common.~~ The minimum fan speed setting is up to the discretion of the system designer and operator, but the capability to reduce the fan speed in response to space conditions must be provided. The fan speed may be adjusted to maintain adequate air circulation in order to insure product integrity and safety.

For refrigerated spaces that are not solely for ~~precooling~~quick-chilling or quick-freezing of product (~~ie.~~i.e. used for cold storage part of the year), variable speed control must be implemented when the spaces are ~~used to store product~~not performing quick-cooling.

The intent of this requirement is to take advantage of the “third-power” fan law. Due to the physics of the “Fan Laws,” the required fan motor power reduces approximately by the cube of the fan speed, while the airflow is proportional to the fan speed. As a result, running a fan at 80 percent~~%~~ speed requires roughly 55 percent~~%~~ power while providing nearly 80 percent~~%~~ air flow, allowing for a significant percentage of the maximum fan air flow for a fraction of the required power. The figure below shows the correlation between fan speed and both required fan power and approximate airflow.

DRAFT

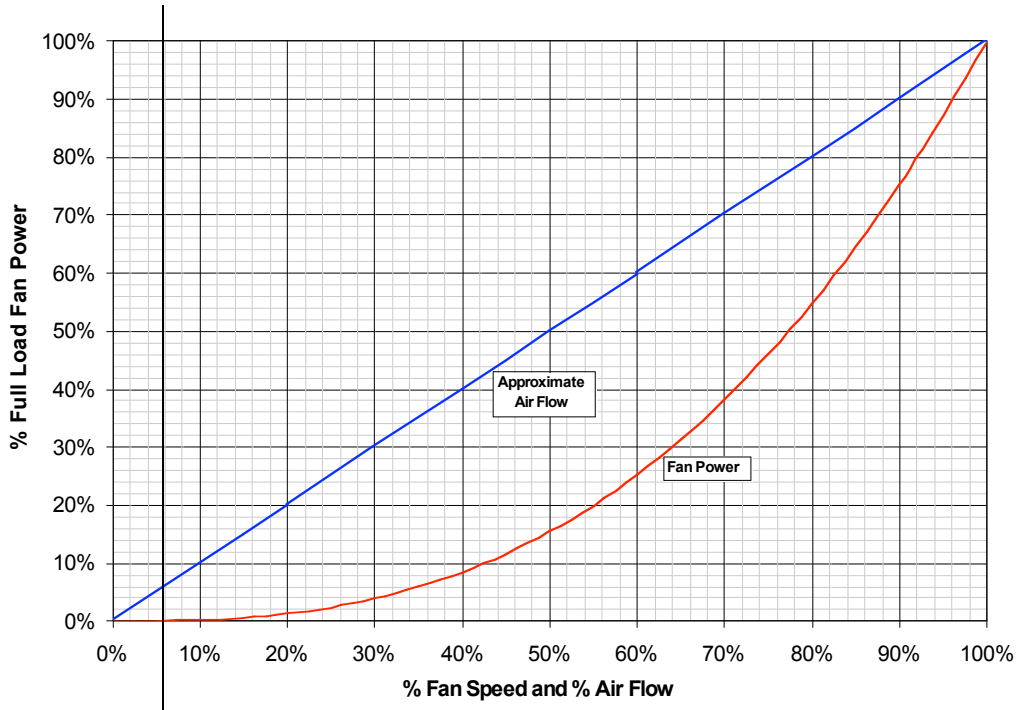

Figure 8-5. Relationship between Fan Speed and Required Power

~~While reducing fan speeds can result in significant power savings, varying speed in response to space temperature~~Correct operation of fan speed control requires the associated system suction pressure~~s~~ to be ~~set~~controlled such that the design capacity of the ~~coil~~evaporator is ~~achieved~~maintained. If the suction pressure ~~set-point~~setpoint is too high relative to the desired room temperature, the evaporator fans will run at 100~~%~~ percent speed and ~~the~~ energy savings ~~won't~~will not be realized. System controls should be provided to maintain suction pressure at design conditions and if floating suction pressure control is utilized, suction pressure should float up only after fan speed is at minimum and should float back down prior to increasing fan speed. ~~While raising the suction pressure set-point improves compressor performance, the compressor energy savings is usually less than what would be achieved with a lower suction pressure and evaporator fans running at reduced speeds.~~

Varying the speed of the evaporator fans, rather than continuous full-speed operation coupled with on/off liquid control, ~~motor~~ allows the cooling capacity to vary to match the load~~causes the delivered cooling energy to vary~~. This can cause operational problems in systems where the compressor cannot reduce ~~output~~capacity in response to the reduced evaporator ~~fan speed~~load. This situation is common in small air-cooled unitary systems utilizing a single compressor. Evaporators served by a single compressor ~~without the ability to "unload"~~less than 50 hp, which typically have limited unloading capability, are exempt from this requirement (EXCEPTION to Section 126(c)2 and §126(e)2). ~~This situation is common in small, unitary systems utilizing a single air-cooled compressor.~~

Example 8-5

Question

~~VFD control of evaporator fans in liquid overfeed systems (in progress)~~A split system with a packaged air-cooled condensing unit utilizing a single 30~~-HP~~hp compressor serves two direct expansion coils in a 3,200 square-foot cooler. ~~The compressor does not have the ability to unload or vary capacity, and the evaporators each have two 1-HP fan motors.~~ Are the evaporator fans required to have variable speed control?

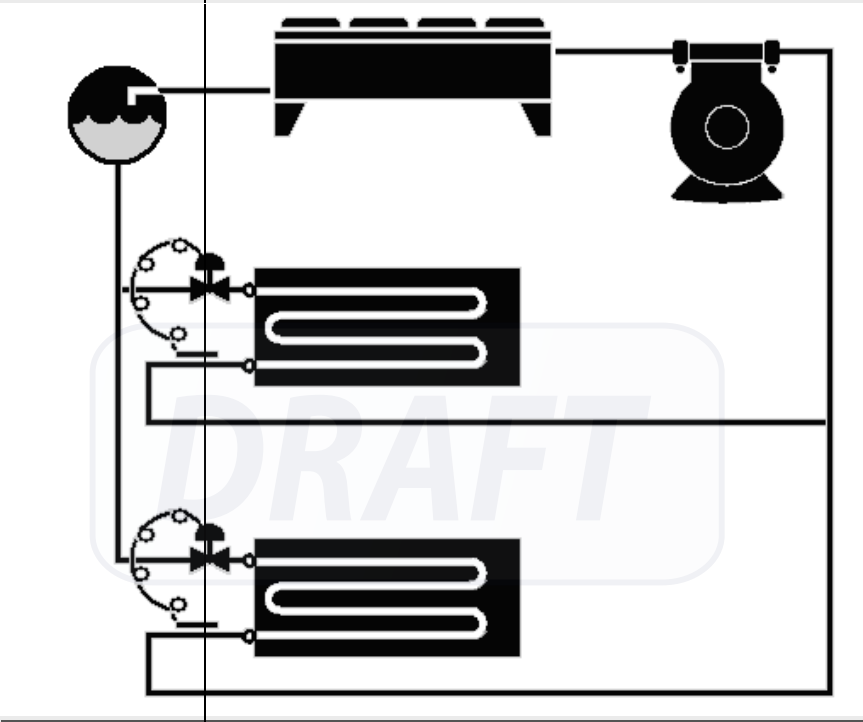

Answer

No. Since the system has a single compressor less than 50~~-HP~~hp ~~that does not have the ability to vary capacity,~~ the evaporator fans are exempt from the variable speed requirement.

~~Varying the speed of the evaporator fan motor causes the delivered cooling energy to vary. This can cause operational problems in systems where the compressor cannot reduce output in response to the reduced evaporator fan speed. Thus, evaporators served by a single compressor without the ability to "unload" are exempt from this requirement. This situation is common in small, unitary systems utilizing a single air-cooled compressor or tandem compressors operating in parallel.~~

Example 8-6

~~VFD control of evaporator fans in DX systems (in progress)~~Question

A split system with a packaged air-cooled condensing unit, utilizing two reciprocating 40~~50-HP~~hp compressors connected in parallel, serves multiple direct expansion coils in a 10,000 square-foot cooler. ~~Each evaporator has three 1.5-HP fan motors.~~ Are the evaporator fans required to have variable speed control?

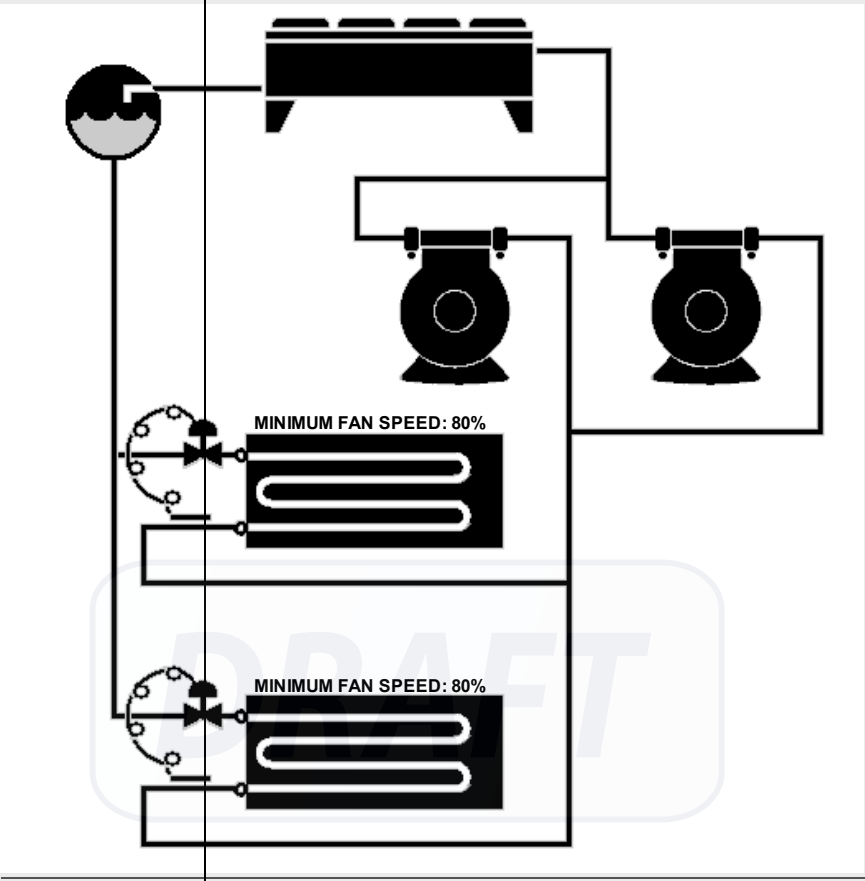

Answer

Yes. Since the evaporators are served by more than one compressor, they must have variable speed control. In order to facilitate the implementation of variable speed control of the evaporator fans, the compressors should have the ability to vary capacity to maintain a stable suction pressure. Since the evaporators are direct expansion coils, the controls should ~~should be able to allow~~include a minimum fan speed of approximately 80~~%~~ percent or less ~~(subject to product quality requirements)~~.

Example 8-7

Question

A ~~cooler warehouse~~freezer uses a number of flooded evaporator coils with two 1~~-HP~~hp fan motors each that are served by a single 75~~-HP~~hp screw compressor. Do the evaporator fans need to have variable speed control?

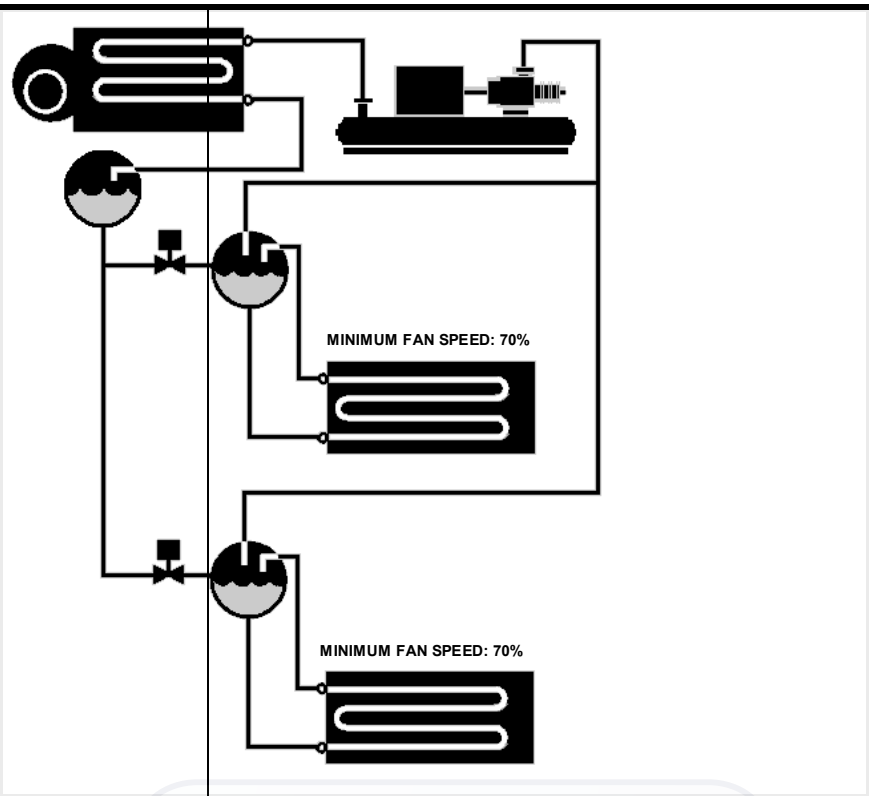

Answer

Since the ~~screw~~ compressor is equal to or greater than 50 hp ~~has to have the ability to vary capacity~~, the evaporator fans must have variable speed control even though there is only one compressor serving the system. Since the evaporators are flooded coils, the control system should ~~be able to allow~~include a minimum fan speed of approximately 70~~%~~ percent or lower. ~~(subject to product quality requirements).~~

Example 8-8

Question

A -20°-F (-29 °C) freezer has a number of recirculated evaporator coils that were ~~designed~~selected to ~~operate~~meet the design load at a 10°-F (-12 °C) temperature difference (TD). The evaporator fan motors ~~are on~~utilize variable speed drives and the control system varies the fan speed in response to space temperature. What should the freezer saturated suction temperature be in order to achieve ~~significant evaporator fan power savings?~~proper control and savings?

Answer

Since the coils were designed at a 10°-F (-12 °C) TD and the target freezer temperature is -20°-F (-7 °C), the saturated suction temperature at the evaporator should be ~~set at approximately~~ -30°-F (34 °C) (-20° F minus 10° F); with the compressor controlled at a lower temperature, based on the design piping pressure drop. For example with 2°-F (-17 °C) piping losses the compressor control setpoint would be -32° F (-36 °C). ~~.~~

8.3.3 Condensers

§126(d)

All refrigeration systems using ammonia as the refrigerant must be evaporatively cooled. This requirement may be met by an evaporative condenser or by use of a water-cooled condenser connected to a closed loop fluid cooler or cooling tower. Air cooled condensers and groundwater condensers are not permitted in ammonia systems. The condensers (whether evaporative condensers or water-cooled condenser plus cooling tower/fluid cooler) must be sized to provide sufficient heat rejection capacity under design conditions while maintaining a specified maximum "approach" temperature that varies by climate. When determining design heat rejection rates, reserve or backup compressors are not included in the total heat rejection calculations. The approach temperature is defined as the difference between the saturated condensing temperature and the outdoor wet-bulb temperature. Designers should use the 0.5~~%~~ percent design wet-bulb temperature from Table 2-3 – Design Day Data for California Cities in the Reference Joint Appendices JA2 to demonstrate compliance with this requirement. The approach temperature requirements are listed in Table 8-2.

Condenser fans for evaporative condensers must be continuously variable speed. Variable frequency drives are commonly used to provide continuously variable speed control of condenser fans. The condensing temperature control system must be designed to control all fans serving a common condenser loop in unison. Thus, the fan speed of all fans within a single condenser or set of condensers serving a common high side or cooling water loop should modulate together, rather than running some fans at full flow while controlling the condensing temperature by varying the speed of a single fan. Once the fan speed has been reduced to a minimum level, fans may be shut down while modulating the speed of the remaining fans to maintain the condensing temperature set point.

The minimum saturated condensing temperature setpoint for systems utilizing evaporative condensers must be 70°F (21°C) or less. To provide stable system operation at the minimum condensing temperature, all components in the system must be capable of operating at a saturated condensing temperature less than or equal to the minimum saturated condensing temperature setpoint.

To minimize overall system energy consumption, the condensing temperature setpoint in evaporatively cooled systems must be reset using outdoor wet bulb temperature (i.e. variable setpoint control) rather than controlling to a single setpoint.

Alternative setpoint control strategies may be utilized which achieve similar results to the prescribed wet bulb following control method; controlling fan speed by utilizing calculations or mapped performance to minimizing total compressor and condenser fan power. These controls are uncommon but may be used if

the control method is sufficiently described and proven to the satisfaction of the building official.

Table 8-2. Approach Temperature Requirements for Evaporative Condensers

0.5% Design wet-bulb temperature from Table 2-3	Maximum Approach Temperature
≤ 76°F (24°C)	20°F (-7°C)
Between 76°F (24°C) and 78°F (26°C)	19°F (-7°C)
≥ 78°F (26°C)	18°F (-8°C)

Example 8-~~7~~9

Question

~~A~~ The refrigerated warehouse compressor plant ~~contains~~ shown below has ~~several~~ a backup or "swing" compressor~~s~~. Does the heat rejection from this ~~backup or swing~~ compressor~~s~~ need to be included in the ~~approach temperature~~condenser sizing calculations?

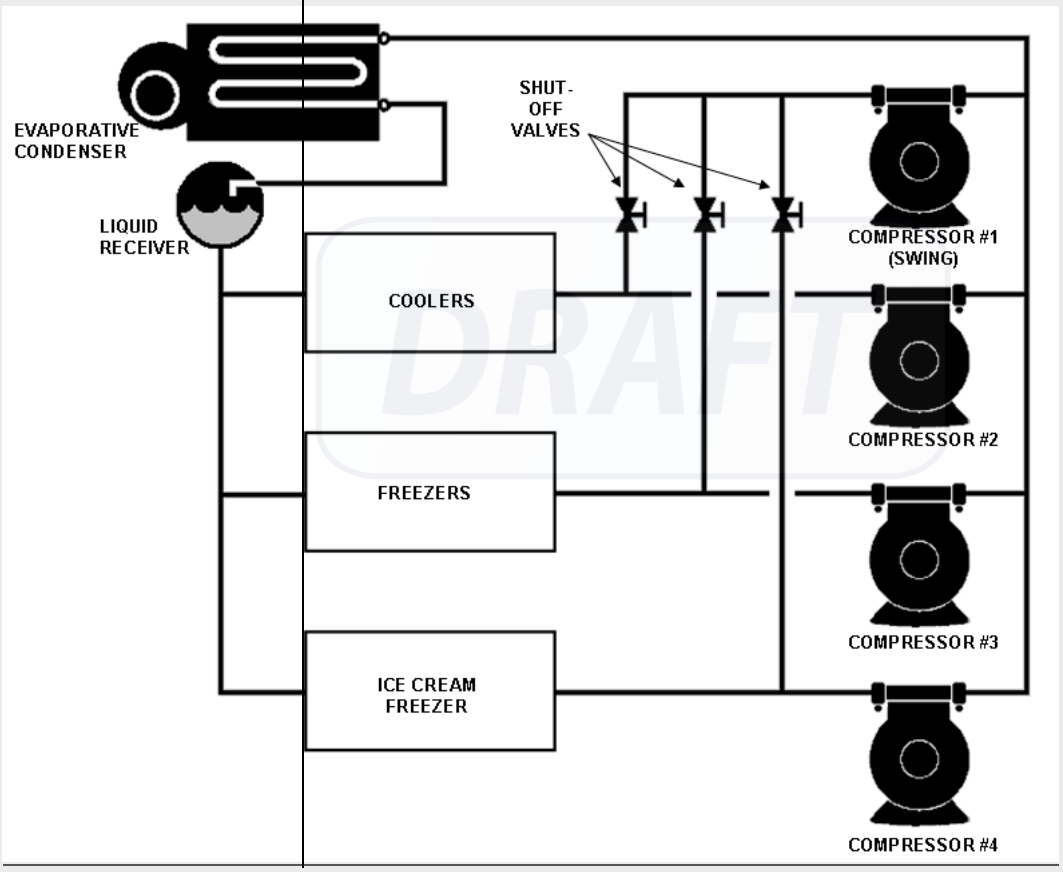

Answer

No. ~~Only the compressors that are expected to operate simultaneously are included in the approach temperature calculations~~The heat rejection calculations for purposes of this Standard exclude ~~the~~ compressor(s) ~~(in this example, compressor #1)~~ that are used solely for backup. In

this case, the calculations would include the heat of rejection from C~~c~~ompressors 2, 3, and 4 and would exclude Compressor 1.

Example 8-10

Question

A system is to be designed with an evaporative condenser~~.~~ in a location where the 0.5~~%~~ percent design ~~wetbulb~~wet bulb temperature is 72°-F (22°C). What is the maximum design approach?

Answer

Since the 0.5~~%~~ percent design wet-bulb temperature is less than 76°-F (24 °C), the maximum design approach per Table 8-2 is 20°-F (-7 °C). The design condensing temperature would be 92° F (33.3 °C) (72° F plus 20° F).

~~Condenser fans for evaporative condensers must be continuously variable speed. Variable frequency drives are commonly used to provide continuously variable speed control of condenser fans. The condensing temperature control system must be designed to control all fans serving a common condenser loop in unison. Thus, the fan speed of all fans within a single condenser or set of condensers serving a common refrigerant high side or cooling water loop should modulate together, rather than running some fans at full flow while controlling the condensing temperature by varying the speed of a single fan. Once the fan speed has been reduced to a minimum level, fans may be shut down while modulating the speed of the remaining fans to maintain the condensing temperature set point.~~

~~The minimum saturated condensing temperature setpoint for systems utilizing evaporative condensers must be 70°F or less. To provide stable system operation at the minimum condensing temperature, all components in the system must be capable of operating at a saturated condensing temperature less than or equal to the minimum saturated condensing temperature setpoint.~~

~~To minimize overall system energy consumption, the condensing temperature setpoint in evaporatively cooled systems must be reset with eitherusing outdoor wetbulbwet bulb temperature (i.e. variable setpoint control) rather than controlling to a single setpoint.~~

~~Alternative setpoint control strategies may be utilized which achieve similar results to the prescribed wet bulb following control method; controlling fan speed by utilizing calculations or mapped performance to minimizing total compressor and condenser fan power. These controls are uncommon but may be used if the~~

~~control method is sufficiently described and proven to the satisfaction of the building official.~~
~~or refrigerant system demand or should allow the saturated condensing temperature to "float" to the minimum condensing temperature setpoint.~~

Example 8-11

Question

A refrigerated ~~wharehouse~~warehouse with evaporative condensers is being commissioned. The control system designer has utilized a ~~wetbulb~~wet bulb-following control strategy to reset the system saturated condensing temperature (SCT) ~~set-point~~setpoint. The refrigeration engineer has calculated that adding a TD of 15°-F (-9 °C) above the ambient ~~wetbulb~~wet bulb temperature should provide a saturated condensing temperature ~~set-point~~setpoint that minimizes the combined compressor and condenser fan power usage throughout the year. What might the system SCT and SCT ~~set-point~~setpoint trends look like over an example day?

Answer

The following figure illustrates what the actual saturated condensing temperature and SCT ~~set-point~~setpoints ~~might look like~~could be over an example day using the ~~wetbulb~~wet bulb-following control strategy with a 15°-F (-9 °C) TD and also observing the 70°-F (21-°C)minimum condensing temperature requirement. As the figure shows, the SCT ~~set-point~~setpoint is continuously reset 15° F (-9 °C)- above the ambient ~~wetbulb~~wet bulb temperature until the minimum SCT ~~set-point~~setpoint of 70° F is reached. The figure also shows a maximum SCT ~~set-point~~setpoint (in this example, 90° F (32.2 °C)) which may be utilized to limit the *maximum* control ~~set-point~~setpoint, regardless of the ambient temperature value or TD parameter.

DRAFT

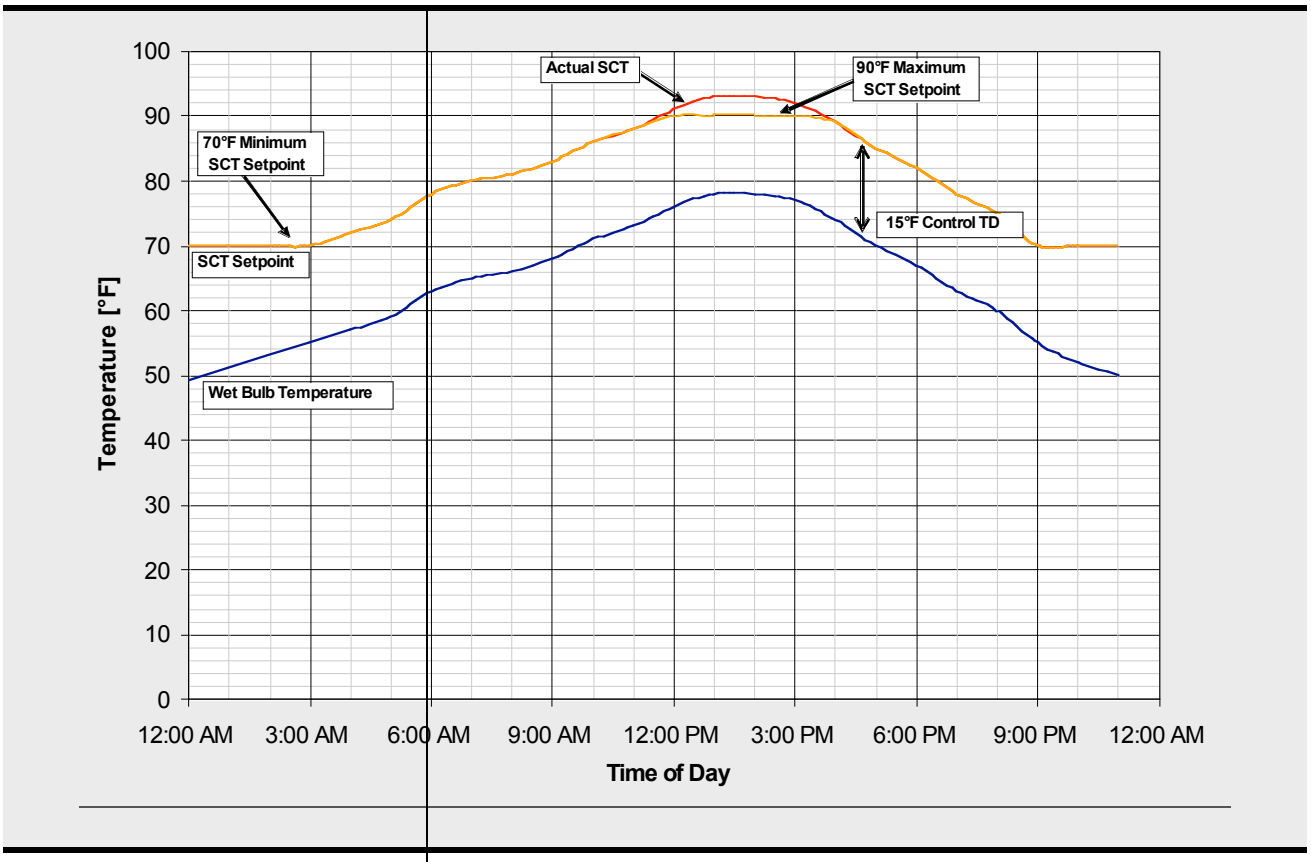

Air cooled condensers are permitted in systems using refrigerants other than ammonia. The condensers must be sized to provide sufficient heat rejection capacity under design conditions while maintaining a specified maximum "approach" temperature that varies according to the temperature of the refrigerated spaces served by the system. The approach temperature is defined as the difference between the saturated condensing temperature and the outdoor dry-bulb temperature. When determining design heat rejection rates for the purpose of determining minimum condenser capacity in this Standard, reserve or backup compressors are not included in the total heat rejection calculations.

Designers should use the 0.5~~%~~ percent design dry-bulb temperature from Table 2-3 – Design Day Data for California Cities in the Reference Joint Appendices JA2 to demonstrate compliance with this requirement. The approach temperature requirements are shown in Table 8-3.

Table 8-3. Approach Temperature Requirements for Air-Cooled Condensers

Refrigerated Space Type	Space temperature	Maximum Approach Temperature
Cooler	≥ 32°F (0 °C)	15°F (-9 °C)
Freezer	< 32°F (0 °C)	10°F (-12 °C)

One and two compressor u~~U~~nitary condensing units, that is, compressor(s) and a condenser~~s~~ designed and rated as a single piece of equipment, with compressor(s) totaling less than 100 hp and with individual compressor systems of less than 50 hp are exempt from the approach temperature requirements.

To improve efficiency of small fractional horsepower motors commonly used in air-cooled condensers and to maintain consistency with the Title 20 Appliance Efficiency Regulations, all single phase condenser fan motors less than 1 horsepower and less than 460 V must be either permanent split capacitor or electronically commutated motors. Documentation must be submitted to the code enforcement authority that documents the use of electronically commutated motors in the condenser fans.

Condenser fans for air-cooled condensers must be continuously variable speed. Variable frequency drives are commonly used to provide continuously variable speed control of condenser fans although controllers designed to vary the speed of electronically commutated motors may be used to control these types of motors. The condensing temperature control system must be designed to control all fans serving a common condenser loop in unison. Thus, the fan speed of all fans within a single condenser or set of condensers serving a common ~~refrigerant or cooling water loop~~high side should modulate together, rather than running some fans at full flow while controlling the condensing temperature by varying the speed of a single fan. Once the fan speed has been reduced to a minimum level, fans may be shut down while modulating the speed of the remaining fans to maintain the condensing temperature set point.

The minimum saturated condensing temperature setpoint for systems utilizing air-cooled condensers must be 70°F (21°C) or less. To provide stable system operation at the minimum condensing temperature, all components in the system must be capable of operating at a saturated condensing temperature less than or equal to the minimum condensing temperature setpoint.

To minimize overall system energy consumption, the condensing temperature setpoint in air cooled systems must be reset ~~with~~ using~~either~~ outdoor ~~drybulb~~dry bulb temperature~~ or refrigerant system demand or should allow the saturated condensing temperature to "float" to the minimum condensing temperature setpoint~~ (i.e. variable setpoint control) rather than controlling to a single setpoint or staging fans with fixed pressure or ambient setpoints.

Alternative setpoint control strategies may be utilized which achieve similar results to the prescribed dry bulb following control method; controlling fan speed by utilizing calculations or mapped performance to minimizing total compressor and condenser fan power. These controls are uncommon but may be used if the control method is sufficiently described and proven to the satisfaction of the building official.

Example 8-~~8~~12	
Question	

An air-cooled condenser is being sized for a system that has half of its installed capacity serving cooler space and the other half serving freezer space. What is the design ~~condensing temperature~~ approach to be added to the design ~~drybulb~~dry bulb temperature?

Answer

Using~~Per~~ Table 8-3, condensers for coolers have a design approach of 15°-F (-9 °C) and for freezers ~~have~~ a design approach of 10°-F (12 °C). When a system serves both freezer and cooler spaces, a weighted average should be used based on the installed capacity. To calculate the weighted average, multiply the percent of the total installed capacity dedicated to coolers by 15°-F (-9 °C). Next, multiply the percent of the total installed capacity dedicated to freezers by 10°-F (-12°C). The sum of the two results is the design condensing temperature approach. In this example, the installed capacity is evenly split between freezer and cooler space. As a result, the design ~~condensing temperature~~ approach for the air-cooled condenser is 12.5°-F (-10.8 °C) ([50%*15]+[50%*10] = 7.5 + 5 = 12.5).

Example 8-13

Question

A cold storage facility with an air-cooled condenser is being commissioned. The control system designer has utilized a ~~drybulb~~dry bulb-following control strategy to reset the system saturated condensing temperature (SCT) ~~set-point~~setpoint. The refrigeration engineer has calculated that adding a TD of 11°-F (-12 °C) above the ambient ~~drybulb~~dry bulb temperature should provide a saturated condensing temperature ~~set-point~~setpoint that minimizes the combined compressor and condenser fan power usage throughout the year. What might the system SCT and SCT ~~set-point~~setpoint trends look like over an example day?

Answer

The following figure illustrates ~~what~~ the actual saturated condensing temperature and SCT ~~set-point~~setpoints ~~might look like~~ over an example day using the ~~drybulb~~dry bulb-following control strategy with a 11°-F (-12 °C) TD and also observing the 70°-F (21°C) minimum condensing temperature requirement. As the figure shows, the SCT ~~set-point~~setpoint is continuously reset 11° F (-12°C) above the ambient ~~drybulb~~dry bulb temperature until the minimum SCT setpoint of 70°-F (21 °C) is reached. The figure also shows a maximum SCT ~~set-point~~setpoint (in this example, 90°-F (32.2 °C)) which may be utilized to limit the *maximum* control ~~set-point~~setpoint, regardless of the ambient temperature value or TD parameter.

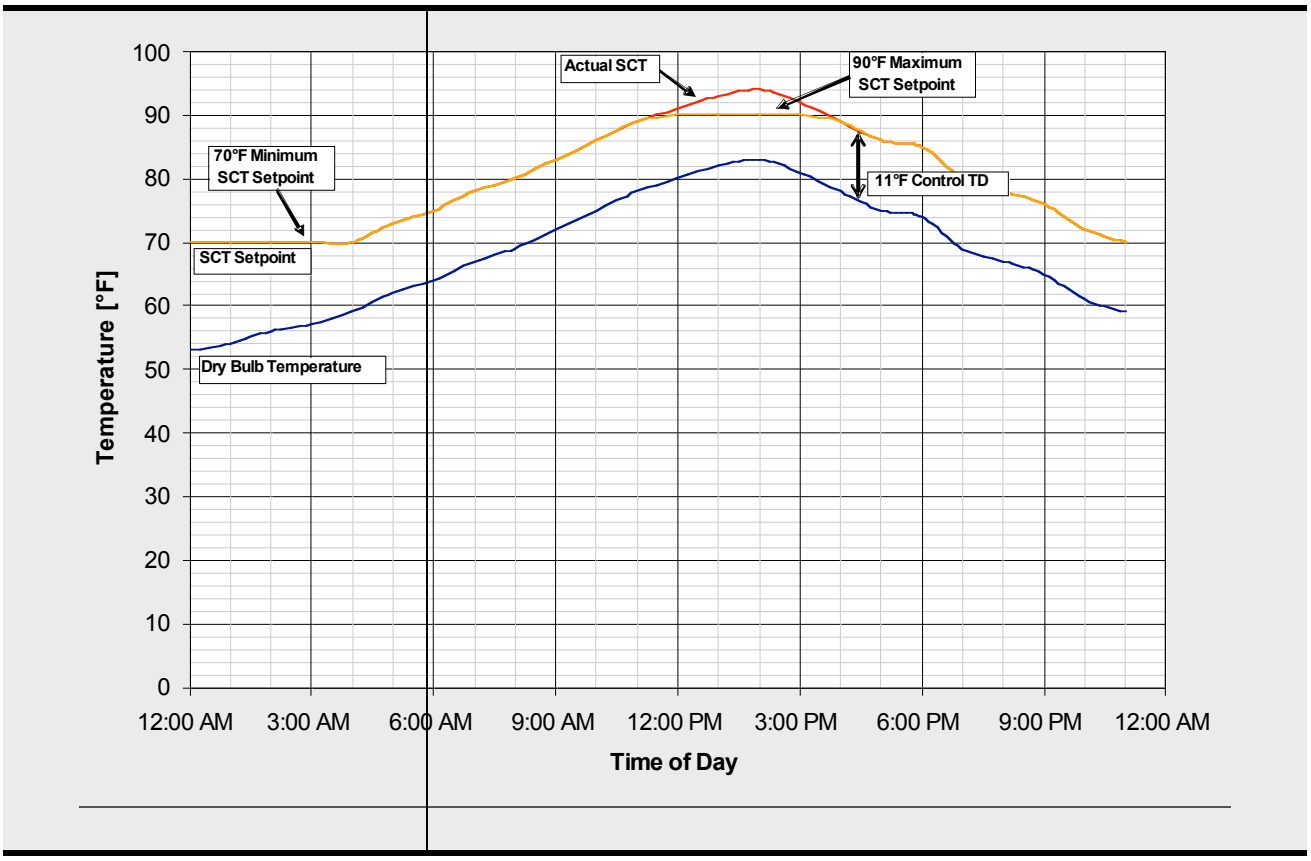

8.3.4 Compressors

§126(e)

To provide stable operation in compliance with the condensing temperature controls described above compressors and all associated components (oil cooling systems, oil separators.) must be designed to operate at a minimum condensing temperature of 70°F (21 °C) or less. Note, oil separator sizing is often governed by the combination of the minimum condensing temperature and the maximum suction temperature. Suction temperatures above the design value may occur under floating suction temperature control schemes.

Since cooling load generally varies through the day and through the year, ~~many systems operate at less than design capacity, screw~~ compressor system designs~~s~~ should address part load efficiency through the use of efficient unloading devices, variable frequency drives on compressor motors, or multiple compressors assigned to a particular suction group.

Screw compressors applied to refrigerated warehouses ~~should~~shall ~~also~~ incorporate ~~a provision for~~the capability to automatically vary~~ing~~ the volume ratio (i.e. variable Vi) in order to optimize efficiency at off-design operating conditions.

Part load efficiency is especially important when a suction group is served by a single compressor, Single screw compressors greater than 50 hp serving a single suction group must utilize a variable speed drive as the primary means of capacity control, or provide documentation that demonstrates the part load efficiency of the compressor. Single -compressor systems include systems served by backup or swing compressors. ~~For the purpose of the Standards, a single compressor system is defined as a system where the suction group is designed to be served by a single operating compressor or set of compressors that turn on and off in unison.~~

Part load efficiency for the purpose of demonstrating compliance with this section of the Standards is defined as the ratio of the compressor input power at 50~~%~~ percent of the rated capacity to the input power of the compressor at 100~~%~~ percent of the rated capacity. The input power at 50~~%~~ percent and 100~~%~~ percent of the rated capacity must be reported at the design suction and condensing temperatures, with 0°-F (-18 °C) subcooling and 10°-F (-12 °C) non-productive suction superheat in the ratings. The ratio of the input power at 50~~%~~ percent and 100~~%~~ percent of rated capacity must be less than or equal to 0.~~605~~860~~. T~~, with the input power ~~is~~ expressed as brake input (shaft) horsepower.

Example 8-~~9~~14 Question Data supplied by the manufacturer of an ammonia screw compressor shows the following performance characteristics:	

DRAFT

Percent of Full Load (%)	Capacity (TR)	Power (BHP)	Performance Factor (TR/BHP)
100%	378.2	894.1	0.423
90%	340.4	841	0.405
80%	302.5	788.4	0.384
70%	264.7	736.8	0.359
60%	226.9	687	0.330
50%	189.1	639.7	0.296
40%	151.3	595.4	0.254
30%	113.5	555	0.205
20%	75.6	519	0.146
10%	46	494.3	0.093

Percent of Full Load (%)	Capacity (Tons)	Power (BHP)	Performance Factor (BHP / Ton)
100%	79.8	69.7	0.9
90%	71.8	64.1	0.9
80%	63.8	57.9	0.9
70%	55.9	51.6	0.9
60%	47.9	45.3	0.9
50%	39.9	40.1	1.0
40%	31.9	36.2	1.1
30%	23.9	31.4	1.3
20%	16	27.2	1.7
10%	8	24.4	3.1

Does this compressor meet the part load efficiency criterion specified in §126(e) to be exempt from the requirement to use variable speed control?

Answer

No. The ratio of the brake ~~hp~~horse power (BHP) at 50% of full load to full load is 639.7/894.1 = 0.72. Since the ratio is greater than 0.~~58~~60, the compressor must ~~vary speed in response to the refrigeration load if it is the only dedicated compressor serving a suction group~~utilize variable speed control.

Example 8-15

Question

The system shown below has three 200-hp~~HP~~ compressors serving three different suction levels and one 200-hp~~HP~~ backup or swing compressor that can be valved into any of the three suction lines. Does this count as having more than one compressor per suction group and exempt the compressors from the requirements in §126(e) 2?

DRAFT

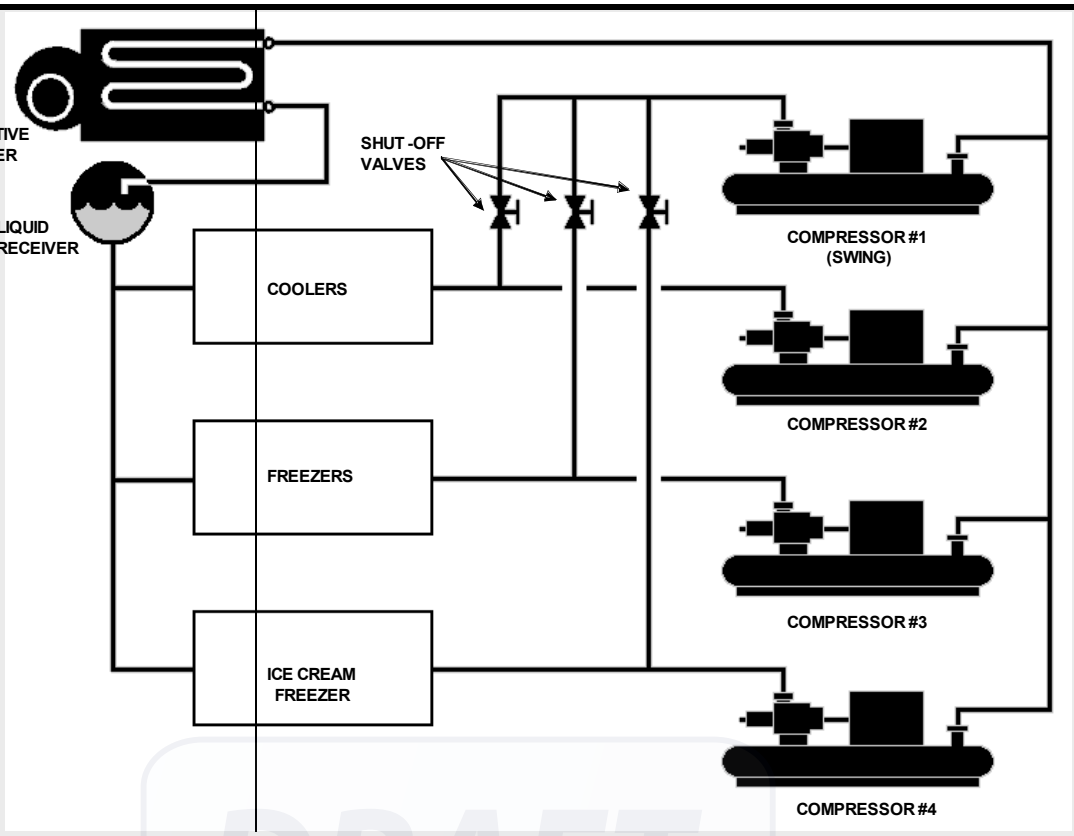

Answer

No. The exemption to §126(e)2 only applies when a suction group has two or more dedicated compressors. A compressor that is used solely as backup does not count as a dedicated compressor. As a result, compressors 2, 3, and 4 in the example above must comply with §126(e) 2 and use variable speed control unless the ratio of the BHP at 50~~%~~ percent of full load to full load is less than 0.~~58~~60.

~~Percent of Full Load (%)~~	~~Capacity (Tons)~~	~~Power (BHP)~~	~~Performance Factor (BHP / Ton)~~
~~100%~~	~~79.8~~	~~69.7~~	~~0.9~~
~~90%~~	~~71.8~~	~~64.1~~	~~0.9~~
~~80%~~	~~63.8~~	~~57.9~~	~~0.9~~
~~70%~~	~~55.9~~	~~51.6~~	~~0.9~~
~~60%~~	~~47.9~~	~~45.3~~	~~0.9~~
~~50%~~	~~39.9~~	~~40.4~~	~~1~~
~~40%~~	~~31.9~~	~~36.2~~	~~1.1~~
~~30%~~	~~23.9~~	~~31.4~~	~~1.3~~
~~20%~~	~~16~~	~~27.2~~	~~1.7~~
~~10%~~	~~8~~	~~24.4~~	~~3.1~~

~~Does this compressor meet the part load efficiency criterion specified in §126(e)?~~

~~Answer~~

~~Yes. The ratio of the brake hp at 50% of full load to full load is 40.4/69.7 = 0.58. Since the ratio is less than 0.6, the compressor meets the part-load performance criterion.~~

8.4 Additions and Alterations

§149

Requirements related to additions and alterations are covered by the Standards in §149. Definitions relevant to refrigerated warehouses include:

- An addition is a change to an existing refrigerated warehouse that increases refrigerated floor area and volume. See §149(a)1.
- When an unconditioned or conditioned building; or unconditioned or conditioned part of a building adds refrigeration equipment so that it becomes refrigerated, this area is treated as an addition.
- An alteration is a change to an existing building that is not an addition or repair. An alteration could include installing new evaporators, a new lighting system, or a change to the building envelope, such as adding insulation. See §149(b)1.
- A repair is the reconstruction or renewal of any part of an existing building or equipment for the purpose of its maintenance. For example, a repair could include the replacement of an existing evaporator or condenser. See §149(c).

When refrigeration is provided for an alteration or addition by expanding an existing system, that existing system need not comply with the mandatory measures for refrigerated warehouses. However, any addition or altered space ~~or addition~~ must meet all applicable mandatory requirements. Repairs must not increase the preexisting energy consumption of the repaired component, system, or equipment; otherwise, it is considered to be an alteration.

Example 8-~~10~~16

Question

The new construction is an addition to an existing refrigerated warehouse. The new space is served by an existing refrigeration plant. Does the refrigeration plant need to be updated to meet the Standards?

Answer

No. The new construction must comply with the Standards; however, the existing refrigeration equipment is exempt from the Standards.

Example 8-~~11~~17

Question

The new construction includes an addition to refrigerated space and expansion of the existing refrigeration plant. Is the existing refrigeration equipment subject to the Standards requirements?

Answer

No. Only the new equipment installed in the added refrigerated space is subject to the requirements of the Standards. If the equipment added to the existing plant is served by a separate high side condenser loop, then the new compressors and condensers must comply with the Standards. If the new equipment shares the same high side condenser loop, then it does not need to comply with the Standards.

Example 8-~~12~~18

Question

An upgrade to an existing refrigerated storage space includes replacing all of the existing evaporators with new evaporators. Do the new evaporators need to comply with the Standards?

Answer

Yes. A complete renovation of the evaporators in the space is considered to be an alteration. The alteration requirements apply when all of the evaporators in the space are changed.

Example 8-~~13~~19

Question

An existing refrigerated storage space is adding additional evaporators to meet an increase in the refrigeration load. Do the new evaporators need to comply with the Standards?

Answer

No. The alteration requirements apply only when all of the evaporators in the space are changed.

Example 8-~~14~~20

Question

An existing evaporator is being replaced by a new evaporator as part of system maintenance. Does the new evaporator need to comply with the Standards?

Answer

No. Replacement of an evaporator during system maintenance is considered a repair. However, the energy consumption of the new evaporator must not exceed that of the equipment it replaced.

DRAFT

9. Performance Approach

This chapter summarizes the whole building performance approach to compliance. It includes a discussion of computer methods, the procedures involved in determining the energy budget and the proposed building's energy use, and how to plan check performance compliance. The basic procedure is to show that the Time Dependent Valuation (TDV) energy of the proposed design is less than or equal to the TDV energy of the standard design, where the standard design is a building like the proposed design, but one that complies exactly with both of the mandatory measures and the prescriptive requirements.

The performance method is the most detailed and flexible compliance path. The energy performance of a proposed building design can be calculated according to actual building geometry and site placement. Credit for certain conservation features, such as a daylit atrium, cannot be taken in the prescriptive approach, but could be evaluated with an approved computer program.

The contents of this chapter are organized as follows:

- Section 9.1 describes the basic concepts and procedures involved in using the performance approach
- Section 9.2 describes analysis procedures used to demonstrate compliance, including the rules used to generate the annual energy budget
- Section 9.3 reviews the basic scenarios for compliance, including cases when the permit application includes less than a whole building
- Section 9.4 outlines the enforcement and compliance process, including the plan check documents required when using the performance approach

This chapter is not a substitute for the compliance supplement of any particular approved computer program or for the detail provided in the Nonresidential ACM Manual.

DRAFT

9.1 Performance Concepts

The Warren-Alquist Act requires "performance standards," which establish an energy budget for the building in terms of energy consumption per square foot of floor space. This requires a complex calculation of the estimated energy consumption of the building, and the calculation is best suited for a computer. The Energy Commission uses a public domain computer program to do these calculations. For compliance purposes it also approves the use of privately developed computer programs as alternatives to the public domain computer program. The public domain computer program and the Commission-approved privately developed programs are officially called alternative calculation methods (ACMs). The rules for approval of privately developed ACMs are contained in

the *Residential and Nonresidential Alternative Calculation Method Approval Manuals* that are commonly referred to as "*ACM Manuals*."
It's easiest to talk about these programs as "compliance software," and we will use that term throughout this manual.

9.1.1 Minimum Capabilities

Approved programs must simulate or model the thermal behavior of buildings and the interaction of their space conditioning, lighting and service water heating systems. The calculations include:

- Heat gain and heat loss through walls, roof/ceilings, doors, floors, windows, and skylights
- Solar gain from windows, skylights, and opaque surfaces
- Heat storage effects of different types of thermal mass
- Building operating schedules for people, lighting, equipment and ventilation
- Space conditioning system operation including equipment part load performance.

9.1.2 CEC Approval

DRAFT

Alternative calculation methods must be approved by the CEC. Approval involves the demonstration of minimum modeling capabilities, required input and output, and adequate user documentation. The program must be able to:

- Automatically calculate the custom energy budget
- Calculate the energy use of the proposed design in accordance with specific fixed and restricted inputs
- Print the appropriate standardized compliance forms with the required information and format if and only if a proposed building complies. Other reports that do not resemble forms may be printed for non-complying buildings.

Input and output requirements and modeling capabilities are tested by using the program to calculate the energy use of certain prototype buildings under specific conditions, and the results are compared with the results from a reference computer program, which is DOE-2.1E. These requirements for compliance software are spelled out in detail in the Nonresidential ACM Manual.

9.1.3 Time Dependent Valuation (TDV)

Beginning with the 2005 Standards, the “currency” for assessing building performance is time dependent valued (TDV) energy. TDV energy replaces source energy, which has been the currency since the CEC first adopted standards in 1978.

TDV, as the name implies, values energy differently depending on the time it is used. This means that electricity saved on a hot summer afternoon will be worth more in the compliance process than the same amount of electricity saved on a winter morning. The value assigned to energy savings through TDV more closely reflects the market for electricity, gas, propane and other energy sources and provides incentives for measures, such as thermal storage or daylighting, that are more effective during peak periods.

Reference Joint Appendix ~~III~~ JA3 provides more information on TDV energy and detailed TDV data is available from the CEC upon request. §102 states: "TDV multipliers for propane shall be used for all energy obtained from depletable sources other than electricity and natural gas."

Professional Judgment

Certain modeling techniques and compliance assumptions applied to the proposed design are fixed or restricted. That is, there is little or no freedom to choose input values regarding specific input variables for compliance modeling purposes. However, there remain other aspects of computer modeling for which professional judgment is necessary. In those instances, it must be exercised properly in evaluating whether a given assumption is appropriate.

Building departments have full discretion to question the appropriateness of a particular input, especially if the user has not substantiated the value with supporting documentation.

DRAFT

Two questions may be asked in order to resolve whether good judgment has been applied in any particular case:

1. Is the approach or assumption used in modeling the proposed design consistent with the approach or assumption used in generating the energy budget?
   - The rule is to model the proposed design using the same assumption and/or technique used by the program in calculating the energy budget unless drawings and specifications indicate specific differences that warrant conservation credits or penalties.
2. Is a simplifying assumption appropriate for a specific case?
   - If simplification reduces the energy use of the proposed building when compared to a more explicit and detailed modeling assumption, the simplification is not acceptable.

PERFORMANCE CERTIFICATE OF COMPLIANCE Part 2 of 3 **PERF-1**

Nonresidential Sample Building	DATE 1/18/2005

ANNUAL TDV ENERGY USE SUMMARY (kBtu/sqft-yr)

ENERGY COMPONENT	Standard Design	Proposed Design	Compliance Margin
Space Heating	1.74	3.19	-1.45
Space Cooling	169.80	138.91	30.89
Indoor Fans	89.08	90.51	-1.43
Heat Rejection	0.00	0.00	0.00
Pumps & Misc.	0.00	0.00	0.00
Domestic Hot Water	0.00	0.00	0.00
Lighting	95.52	93.69	1.83
Receptacle	64.25	64.25	0.00
Process	23.03	23.03	0.00
TOTALS:	443.41	413.58	29.83

Percent better than Standard: 6.7% (7.1% excluding process)

BUILDING COMPLIES

GENERAL INFORMATION

Building Orientation	(North) 0 deg	Conditioned Floor Area	4,480 sqft.
Number of Stories	2	Unconditioned Floor Area	0 sqft.
Number of Systems	3	Conditioned Footprint Area	2,880 sqft.
Number of Zones	3	Fuel Type	Natural Gas

	Orientation	Gross Area	Glazing Area	Glazing Ratio
Front Elevation	(North)	800 sqft.	320 sqft.	40.0%
Left Elevation	(East)	1,040 sqft.	320 sqft.	30.8%
Rear Elevation	(South)	1,900 sqft.	260 sqft.	13.7%
Right Elevation	(West)	720 sqft.	0 sqft.	0.0%
Total		4,460 sqft.	900 sqft.	20.2%
Roof		2,880 sqft.	0 sqft.	0.0%

	Standard	Proposed
Lighting Power Density	1.314 W/sqft.	1.330 W/sqft.
Prescriptive Env. Heat Loss	931 Btu/h	1,077 Btu/h
Prescriptive Env. Heat Gain	91,938 Btu/h-F	86,777 Btu/h-F

LEED™ Energy & Atmosphere Credit	
Savings vs. Title 24[1]	8.38%
Energy Performance Credit[2]	1 Points

1. excludes process and receptacle 2. see LEED table 8-c or 8-d

Remarks:

DRAFT

Run Initiation Time: 01/18/05 11:45:45 Run Code: 1106077545

EnergyPro 4.0 By EnergySoft User Number: 0000 Job Number: M98000 Page:4 of 21

Figure 9-~~1~~1 – Annual TDV Energy Use Summary (Sample of PERF-1, Part 2 of 3)

Example 9-1

Question

If a PERF-1 shows that the proposed energy use of the "HVAC Fans and Pumps" exceeds the standard design energy budget, but the total energy use is less than the energy budget, does the building still comply?

Answer

Yes. More fan energy is being used by the proposed design, but the "Total" proposed energy use is less than the "Total" standard design energy budget, therefore the building complies.

9.2 Analysis Procedure

§141

This section is a summary of the analysis procedures used in demonstrating compliance with approved compliance software (computer programs). Program users and those checking for enforcement should consult the most current version of the compliance software user's manual and/or on-line Help and associated compliance supplements for specific instructions on the operation of the program.

Although there are numerous requirements for each compliance software input, the data entered into each approved computer program may be organized differently from one program to the next. As a result, it is not possible in this summary to present all variables in their correct order or hierarchy for any one program. The aim is simply to identify the procedures used to calculate the standard design energy budget and the TDV energy use of the proposed building.

9.2.1 General Procedure

Any approved computer program may be used to comply with the Standards. The following steps are a general outline of the process:

- All detailed data for the building component or components must be collected including glazing, wall, door, roof/ceiling, and floor areas, construction assemblies, solar heat gain coefficients, mass characteristics, equipment specifications, lighting, and service water heating information from the drawings and specifications.
  Although most computer programs require the same basic data, some information, and the manner in which it is organized, may vary according to the particular program used. Refer to the compliance supplement that comes with each program for additional details.
  Be sure that the correct climate information has been selected for the building site location (see Joint Appendix ~~II~~2). Compliance software~~s~~ adjust the climate data for each climate zone based on the rules described in Joint Appendix ~~II~~2 and adjusted for local conditions using ASHRAE design data from Joint Appendix 2.
- The program user chooses construction assemblies from Joint Appendix ~~IV~~4~~,~~ ; however, approved software can make certain modifications to the standard construction~~s~~ assemblies in Joint Appendix ~~IV~~ 4 to accommodate project specific conditions.

DRAFT

- Prepare an input file that describes the other thermal aspects of the proposed design according to the rules described in the program's compliance supplement.
  Input values and assumptions must correctly correspond to the proposed design and conform to the required mandatory measures.
- Run the computer program to automatically generate the energy budget of the standard design and calculate the energy use of the proposed design.

Note: When creating any computer input file, use the space provided for the project title information to concisely and uniquely describe the building being modeled. User-designated names should be clear and internally consistent with other buildings being analyzed in the same project. Title names and explanatory comments should assist individuals involved in both the compliance and enforcement process.

9.2.2 Basic Data Entry

The following elements are used by approved computer programs. These elements must be consistent with plans and specifications submitted in the building permit application:

- *Gross Exterior Surfaces*: All gross exterior surfaces, each with its respective area, orientation and tilt.
- *Opaque Exterior Walls:* Each opaque exterior wall construction assembly, as well as wall area, orientation and tilt. Heat capacities, or characteristics necessary to determine the heat capacity (conductivity, mass, volume) of opaque exterior walls, must be included.
- *Doors:* All doors must be included.
- *Opaque Roofs/Ceilings:* Each opaque exterior roof/ceiling construction assembly, as well as roof/ceiling area, solar reflectance and thermal emittance, orientation and tilt. Heat capacity, or characteristics necessary to determine the heat capacity (conductivity, mass, volume) of opaque exterior roof/ceilings, must be included.
- *Raised Floors and Slab Floors:* Each floor construction assembly, as well as floor area.
- *Glass in Walls and Shading:* Each vertical glass area, orientation, tilt, U-factor and solar heat gain coefficient.
- *Horizontal (Skylight) Glass and Shading:* Each horizontal or skylight glass area, orientation, tilt, U-factor and solar heat gain coefficient.
- *Ventilation (Outside) Air:* Ventilation (or outside air) values in cfm/ft².
- *Fan Power:* Fan power must be included. Fan power should be based on either brake horsepower (HP) at ARI conditions, nominal HP at ARI conditions, or brake horsepower at actual

DRAFT

operating conditions (modeled horsepower must be substantiated by information contained in the construction documents).

- *Cooling and Heating Efficiency:* The actual efficiency of the equipment included in the proposed design.
- *HVAC System Type. The basic type of the cooling and heating system (multiple zones or single zone) and the heating system fuel type (fossil fuel or electric).*
- *No Heating or Cooling Installed:* If total heating or cooling capacity is not specified, the TDV energy use will be based on a standard design heating or cooling system (§141(b)).
- *Cooling System Capacity:* Sensible output capacity of the cooling system at ARI conditions.
- *Heating System Capacity:* The output capacity of the heating system.
- *Other System Values:* All other space conditioning system components that are used by approved computer programs.
- Refer to the *ACM Approval Manual* for more detailed information on how each of the above values ~~are~~is used by the computer programs.

9.2.3 Calculating TDV Energy

The compliance software calculates TDV energy for three main components~~; ~~: the space conditioning energy use, the lighting energy use, and the service water heating energy use. It does not include energy for plug loads from computers (even though a default value for the internal gains from plug loads are modeled in the hourly computer simulation), vertical transportation, garage ventilation, outdoor lighting or other miscellaneous energy uses.

The key component of calculating the TDV energy use of the proposed building is that if a feature of the building is not included in the building permit application, the energy use of that feature is equal to that of the standard energy budget (§141(b)). That means that if a permit is submitted for a shell building (envelope only), and the performance approach is used to demonstrate compliance, trade-offs cannot be made between the envelope and the mechanical or lighting system.

DRAFT

Space Conditioning Energy Budget

The space conditioning budget is defined in §141(a)1, as "... the TDV energy used for space conditioning in a standard building in the climate zone and city in which the proposed building is located, calculated with a method approved by the Commission...." The space conditioning energy budget is automatically determined from the program user's inputs from the corresponding elements of the proposed design. This budget is automatically re-calculated each time a compliance run is done.

Lighting Energy Budget

The lighting energy budget is defined in §141(a)2, as "...the TDV energy used for lighting in a standard building calculated with a method approved by the Commission..." The budget consists of the lighting power used by a building based on one of the following criteria:

- When no lighting plans or specifications are submitted for permit, and the occupancy of the building is not known, the standard lighting power density is 1.2 W/ft^2.
- When no lighting plans or specifications are submitted for permit and the occupancy of the building is known, the *standard lighting power density* is equal to the corresponding ~~watt~~ Watt per ~~sf~~^{2} ft^2 value derived in the complete building method~~.~~ of §146(c)1.
- When lighting plans and specifications are submitted for permit, the standard and proposed lighting power density is equal to the corresponding total allowed lighting power (in watts) calculated using either the complete building method, the area category method, or the tailored method (§146(~~b~~c)1, 2 or 3). A complete set of lighting plans and prescriptive forms are required for use of the tailored lighting method in the performance approach.

For all occupancies except hotel guest rooms and high-rise residential living quarters, the proposed lighting power density is expressed in W/ft^2. For residential occupancies (hotel guest rooms or high-rise residential buildings), the approved computer program will set the proposed lighting power density and the standard design LPD at the same the value as specified in the ACM Approval Manual.

Service Water Heating Energy Budget

The service water heating energy budget is defined in §141(a)3 as "...the TDV energy used for service water heating in a standard building calculated in the climate zone in which the proposed building is located, calculated with a method approved by the Commission...." The budget consists of the service water heating energy used by a building assuming the service water heating system meets both the mandatory and prescriptive requirements for water heating.

The service water heating TDV energy use is calculated using a method described in the ACM Manual using the proposed building service water heating system. This system must be consistent with plans and specifications submitted in the building permit application

For high-rise residential buildings, the water heating TDV energy budget is calculated using the methods and assumptions documented in the Residential ACM Manual. The procedure is the same as for low-rise residential buildings.

DRAFT

9.3 Application Scenarios

The performance approach may be used for whole building permit applications or for permit applications that only involve the building envelope or, the mechanical system, or that involve any combination of the building envelope, the mechanical system, and the lighting system together. Lighting cannot be done alone in the performance approach. When less than a whole building is being considered, this is called a permit phase, e.g. the building envelope would be constructed in one permit phase, the mechanical system in another, etc.

9.3.1 Whole Building Compliance

Whole buildings are projects involving buildings where the applicant is applying for permits, and submits plans and specifications for all the features of the building (envelope, mechanical, lighting and service water heating). This could be a first time tenant improvement that involves envelope, mechanical and lighting compliance, or a complete building, where plans and specifications for the entire building are being submitted for permit.

When a whole building is modeled using the performance approach, trade-offs can be made between the envelope, space conditioning, service water heating, and lighting systems that are included in the permit application.

9.3.2 Compliance by Permit Stage

Compliance with only one or more building permit stages can be done using the performance approach except that electrical lighting cannot be done alone. A permit stage is a portion of a whole building permit: either envelope, mechanical, or electrical. In §141(b) it states that only the features of the building that are included in the building permit application can be modeled. This means that trade-offs in energy use are limited to include only those features included in the building permit application.

There are two basic scenarios that occur when performing compliance by permit stage: modeling future construction features that are not included in the permit application, and modeling existing construction that has complied with the Standards.

DRAFT

Modeling Future Construction by Permit Stage

When a feature of a building is not included in the permit application, it is required to default to a feature automatically determined in the computer program. The defaults vary for envelope, mechanical, and lighting. The ACM Manual and the program vendor's compliance supplement contain additional information on the default values.

The default envelope features do not apply when modeling future construction. Usually, this is the first permit requested and at a minimum this feature must be modeled. The proposed building's envelope features are input and an energy budget is automatically generated based on the proposed building's envelope, and/or space conditioning and lighting system.

The default space conditioning system features are fixed if no space conditioning system exists in the building. A standard package gas/electric unit is assumed for each thermal zone in the proposed design. The package system is sized based on the envelope design and whether it meets the prescriptive requirements. If a space conditioning system is included in the permit application, the default space conditioning system is based on the standard design as determined in the ACM Manual.

The default service water heating system features are fixed based on building occupancy. Default service water heating systems are specified for each occupancy type.

The default lighting system features depend on whether or not the occupancy of the building is known. If the building occupancy is known, the allowed lighting power density is determined using the Complete Building Approach for each zone that the occupancy is known. If the building occupancy is not known, 1.2 W/ft^2 is assumed for both the proposed energy use and the energy budget.

Modeling Existing Construction by Permit Stage

When a feature of a building is not included in the permit application, and it is an existing building feature, it is required to *default* to a feature automatically determined in the computer program. The defaults vary for envelope, mechanical, and lighting. The ACM Manual contains additional information on the default values.

The default envelope features are based on the program user's inputs to the computer program. The proposed building's conditioned floor area, glazing, wall, floor/soffit, roof/ceiling, and display perimeter features are input by the program user. The computer program then applies the proposed building's features to the standard design in order to calculate the energy budget. This means that if an application for an envelope permit is not being sought, the computer program will automatically default the features of the standard design to be the same as the features of the proposed design. Only the EXISTING-ENV will be printed to document the existing building.

DRAFT

The default space conditioning system features are fixed based on the building's existing space conditioning system. The program user inputs the existing space conditioning system, including actual sizes and types of equipment. The computer program then applies the proposed building's space conditioning features to the standard design in order to calculate the energy budget. This means that if an application is not being sought for a mechanical permit, the computer program will automatically default the features of the standard design to be the same as the features of the proposed design. No mechanical forms will be printed.

The default service water heating system features are fixed based on building occupancy. Default service water heating systems are specified for each occupancy type. Water heating information will only be listed as "existing".

The default lighting system features are based on the known occupancy of the building. The allowed lighting power density is determined based on the actual lighting power density of the building. The computer program then applies the proposed building's features to the standard design in order to calculate the energy budget. This means that if an application for a lighting permit is not being sought, the computer program will automatically default the features of the standard design to be the same as the features of the proposed design. No LTG form will be printed. All reported lighting will be reported on the PERF-1 Performance Certificate of Compliance.

9.3.3 Additions Performance Compliance

An addition is treated similar to a new building in the performance approach. Since both new conditioned floor area and volume are created with an addition, all systems serving the addition will require compliance to be demonstrated. This means that either the prescriptive or performance approach can be used for each stage of the construction of the addition.

Note: When existing space conditioning or water heating is extended from the existing building to serve the addition, those systems do not need to comply.

Addition Only

Additions that show compliance with the performance approach, independent of the existing building, must meet the requirements for new buildings. In §149(a)2, it states that the envelope and indoor lighting in the conditioned space of the addition, and any newly installed space conditioning or service water heating system serving the addition, must meet the mandatory measures and the energy budget determined in the performance run.

- If the permit is done in stages, the rules for each permit stage apply to the addition performance run.
- If the whole addition is included in the permit application, the rules for whole buildings apply.

Existing Plus Addition

Additions may also show compliance by *either:*

1. Demonstrating that efficiency improvements to the envelope component of the existing building, as well as certain lighting and mechanical improvements, offset substandard addition performance (see §149(a)2.B.ii), or
2. That the existing building combined with the addition meets the present Standards (per §149(b)).

DRAFT

In the Standards, §149(a)2 states that the envelope and indoor lighting in the conditioned space of the addition, and any newly installed space conditioning or service water heating system serving the addition, must meet the mandatory measures just as if it was an addition only. It also allows the applicant to improve the energy efficiency of the existing building so that the entire building meets the energy budget that would apply, if the existing building was unchanged, and the addition complied on its own. Changes to features in the existing building are considered alterations. Therefore, the credit that is allowed for tradeoff by improving existing building features is limited to the amount the new feature in the existing building *exceeds* the minimum standard for a new building as described in §149(b)2.B. In this analysis, features that are changed in the existing building to an efficiency less than that required by §149(b) will result in an energy penalty.

It is important to note that the term "entire building" means the ensemble of all enclosed space in a building, including the space for which a permit is sought, plus all conditioned and unconditioned space within the structure. However, the inclusion of the unconditioned spaces do not affect the overall performance budget of the building as the lighting allowances cannot be traded off between the conditioned and unconditioned spaces, and the installed lighting in the unconditioned portion of the building does not affect the heating and cooling budget of the building. To show compliance with this approach you need to follow the instructions in the computer program's compliance supplement.

When using this compliance approach it is important to take into account all changes in the building's features that are removed from or added to the existing building. Documentation of the existing building's features is required to be submitted with the permit application if this method is used.

Example 9-2

Question

3,000 ft^2 of conditioned space is being added to an existing office building. 60% of the lights in the existing office space are being replaced with more efficient fixtures. Can credit be taken for the improved lights in the existing building to comply through the existing-plus-addition performance approach?

Answer

Credit can only be taken for lighting efficiency improvements resulting in a lower lighting power density than is required to meet §146 of the Standards. Otherwise, credit may be taken for improvement(s) to the envelope component only. Lighting in the existing building must meet all prescriptive requirements in this case (more than 50% of the lights replaced or the connected load is increased).

DRAFT

9.3.4 Alterations Performance Compliance

Using the performance approach for an alteration is similar to demonstrating compliance with an addition.

Alterations of the Permitted Space

Altered spaces can show compliance with the performance approach independent of the remainder of the existing building, and must meet the requirements for the newly altered components of the building~~s~~ as specified in Sections 149(b)2.B and C. In the Standards, §149(b)2 states that the envelope and lighting of the alteration, and any newly installed space conditioning or service water heating system serving the alteration, must meet the mandatory measures and the permitted space alone shall comply with the energy budget determined using Commission-approved compliance software~~an alternative computer program~~.

If the permit is done in stages, the rules for each permit stage apply to the alteration performance run.

Alterations in Existing Buildings~~Entire Existing Buildings Plus Alteration~~

Alterations may also show compliance by demonstrating that efficiency improvements to parts of the existing building not initially included in the desired alteration offset decreased performance of the initial alteration compared to an alteration meeting the prescriptive alteration requirement. In the Standards, §149(a)2 states that envelope, lighting, space conditioning or service water heating system alterations~~,~~ must meet the mandatory measures. This approach allows the applicant to improve the energy efficiency of the existing building so that it meets the energy budget that would apply to the entire building if the existing building other than the portion being altered was unchanged. However, changes to features in the existing building are considered alterations. Therefore, the credit that is allowed for tradeoff by improving existing building features is limited to the amount the new feature in the existing building exceeds the minimum standard for a new building as described in §149(b)2.B. In this analysis, features that are changed in the existing building to an efficiency less than that required by §149(b) will result in an energy penalty.

To show compliance with this approach you need to follow the instructions in the computer program's compliance supplement. When using this compliance approach, it is important to take into account all changes in the building's features that are removed from or added to the existing building as a part of the alteration. Documentation of the existing building's features is required to be submitted with the permit application if this method is used.

Existing-Plus-Additions-Plus-Alterations

For additions, the most flexible compliance method is to consider the entire existing building along with the addition (Existing + Addition + Alteration)[1]. The rules for this method are documented in the program vendor's compliance program supplement. Compliance is shown using an approved computer program. Through this method, credit may be taken for energy efficiency features added to the existing building. When prescriptive approach is used, compliance can be demonstrated if the altered component meets or exceeds the

[1] This method may also ~~is~~ be used whenever an alteration is made to existing buildings, whether or not there is an addition to the building at the same time.

requirements of §149(b)1 for that component. When the performance approach is used, the altered component must meet or exceed the requirements in §149(b)2, or another alteration(s) must be made to the existing building, which exceeds the requirements of §149(b)2 that saves the additional energy necessary to at least make up for the alteration(s) that fail to meet §149(b)2. Alternatively, when there is an addition, the addition could be designed to exceed prescriptive requirements to offset proposed existing building alterations that do not meet prescriptive requirements. The rest of this section assumes that the performance approach is used to demonstrate compliance. Altered components not meeting the requirements of §149(b)2 will result in an energy "penalty" in the compliance calculation.

In general the following rules apply to Existing + Addition + Alteration:

1. For roof/ceiling insulation, the altered components must meet or exceed the requirements of Tables 143-A, B, or C.
2. For roofing products (cool roofs), the altered components must meet or exceed the requirements of Section 149(b)1B.
3. For wall insulation, the altered components must meet or exceed the requirements of Tables 143-A, B, or C.
4. For floor/soffit insulation, the altered components must meet or exceed the requirements of Tables 143-A, B, or C.
5. Altered fenestration components must meet or exceed the U-factor and SHGC requirements of Tables 143-A, B, or C, in order to result in an energy "credit" in the performance calculation. The allowed glass area shall be the smaller of the Subsections a and b below:

    a. The proposed glass area,

    b. The larger of::

        1. The existing glass area; or

        2. The area allowed in §143(a)5A.
6. For space conditioning equipment and ducts, the altered components must meet or exceed the requirements of §149(b)1C, 149(b)1Di or §149(b)1Diib, and §149(b)1E.
7. For service water heating systems, the altered component must meet or exceed the requirements of §145.
8. For lighting systems, the altered must meet or exceed the requirements of §149(b)1F and 149(b)1H.

The proposed design budget is based on the actual value of the altered component(s). If the altered component values (proposed design) meets or exceeds the requirements of §149(b)2B (items 1 through 8 above), then there will be an energy credit for the difference between the proposed design and the standard design, where the standard design is based on the existing condition of that component. The existing condition may be based on documentation at the time of application for the alteration permit. If the altered component does not

DRAFT

meet the requirements of §149(b)2B (items 1 through 8 above), there will be an energy penalty for the difference between the proposed design and the standard design, where the standard design is based on having that component meet the requirements in §149(b)2B.

Therefore, it is important to note that the standards budget is calculated in two different ways depending upon whether the altered component meets or fails to meet the prescriptive requirements for the component that are described in §149(b)2B (items 1 through 8 above);

1. if the altered component meets or exceeds the prescriptive requirements §149(b)2B, the standards budget is based on the actual value for the component; and
2. if the altered component fails to meet the prescriptive requirements, then the standards budget will be based on prescriptive requirements for that component §149(b)2B.

Alterations may include previous improvements that were made to the building after original permit (when the existing building was first constructed). The upgraded efficiency value of that component will be the proposed design and the standard design will be based on the vintage of the original building. The permit applicant must provide evidence that the previous improvements were made subsequent to the original construction of the building. Such evidence may involve receipt, signed statement from previous owners, or in case where previous owners are not available, signed statement of the current owner or other record.

Note that previous improvements that have been used to achieve compliance for previous additions and alterations should not be considered for compliance for subsequent additions and alterations. In this case the efficiency value of the previously altered component should be shown as the standard design. In this case, existing insulation and glazing that are to be considered as unchanged for the purposes of achieving compliance are modeled in both the standard and proposed designs as they presently exist when this can be ascertained, and modeled in both the standard and proposed design as vintage table values when existing conditions are not readily discernible. The compliance software performance program will use the modeled existing component values or the vintage table values to develop the Standard budget based on the information described above. For example, if a 1975 building in climate zone 12 was built with U-factor of 0.60 for fenestration and was subsequently upgraded to 0.47 U-factor, then the compliance software performance program would model the existing condition as U-factor of 0.60 and model the proposed condition as U-factor of 0.47. Consequently, the credit would be relative to the difference between U-factors of 0.60 and 0.47.

Note that if in this example, had the fenestration U-factor had been upgraded to any value greater than 0.47 (for example 0.55), which is the Table 143-A requirement for fenestration U-factor in climate zone 12, the alteration would be subject to a penalty for the difference between U-factors of 0,55 and 0.47.

DRAFT

9.3.5 Alternate Performance Compliance Approach

Any addition, alteration or repair may demonstrate compliance by meeting the requirements applicable to new buildings for the entire building. Using this method, the entire building could be shown to comply in permit stages or as a whole building. The rules for new buildings, permit stage compliance, and whole building compliance would apply.

Documentation of the existing building's features is required to be submitted with the permit application if this method is used.

9.4 Enforcement and Compliance

At the time a building permit application is submitted to the building department, the applicant also submits plans and energy compliance documentation. This section describes the forms and procedures for documenting compliance with the performance requirements. The ACM Manual has specific and detailed output/reporting requirements for all approved compliance softwares.

Compliance software output is required to specify the run initiation time, a unique runcode, and the total number of pages of forms printed for each proposed building run on each page whenever a building complies with the Standards and compliance output has been selected. The plan checker is strongly encouraged to verify these output features for a performance compliance submittal to ensure that the submittal is a consistent set of compliance documentation. The ACM Manual forbids ~~an~~ compliance software from printing standard compliance forms for a proposed building design that does not comply. The plan checker should pay special attention to the PERF-1 form and the Exceptional Conditions List on Part 2 of that form. Every item on the Exceptional Conditions List deserves special attention and requires additional documentation such as manufacturer's cut sheets or special features on the plans and in the building specifications.

The compliance software requirements will automatically produce and reiterate the proper set of forms that correspond to the particular proposed building submitted for a permit, but the plan checker should verify the type of compliance and the required forms from the lists below. Whenever an existing building (or building components) is involved in compliance, the plan checker should look for the term EXISTING that identifies EXISTING building components. Similarly if the compliance form indicates a component is REMOVED or ALTERED these changes should be verified. In the types of permit applications where some building components are unknown, the unknown components cannot be entered by the user and cannot be reported on output forms.

The following discussion is addressed primarily to the building department plan checkers who are examining documents submitted to demonstrate compliance with the Standards, and to the designer preparing construction documents and compliance documentation.

DRAFT

Most compliance forms associated with the computer method approach are generated automatically. These reports are similar in information content and layout to their prescriptive method counterparts.

The following summary identifies the forms that are required for performance compliance. All submittals must contain the following information:

- Unless minimal efficiency and default capacities are used in the performance analysis, either equipment cut sheets showing rated capacities, fan bhp, and airflow at ARI conditions, or the installation certificate must be provided.
- Other documentation supporting each non-standard or non-default value used in the performance approach and indicated in the Exceptional Conditions list on the PERF-1 form must also be included.

Other reports that may be generated by a program are:

- Construction Assemblies Worksheet for adjusting and combining assemblies from Joint Appendix ~~IV~~4.
- Formatted Copy of Input.

The following computer generated forms are required by the ACM Manual for a permit application:

Whole Building Compliance (the number of parts is the minimum number of pages).

- PERF-1: Performance Certificate of Compliance
- ENV-1-C: Envelope Certificate of Compliance (2 parts)
- MECH-1-C: Mechanical Certificate of Compliance (1 part).
- MECH-2-C: Air System, Water Side System, Service Hot Water & Pool Requirements (3 parts).
- MECH-3-C: Mechanical Ventilation (1 part).
- LTG-1-C: Lighting Certificate of Compliance (3 parts).

DRAFT

The LTG-4-C (Lighting Controls Credit Worksheet) and LTG-6-C (Tailored Method Summary and Worksheet) forms may be, and typically will be, submitted by hand. When these pages are hand submitted or submitted independently, they will not be included in the page count automatically generated by the computer for a compliance submittal.

Note: The use of the tailored lighting approach requires independent prescriptive compliance for the lighting system.

Compliance By Permit Stage (the number of form parts are the same as indicated above at Whole Building Compliance).

9.4.1 Approaches

Envelope Only

PERF-1: Performance Certificate of Compliance

ENV-1-C: Envelope Certificate of Compliance (2 parts)

Envelope and Mechanical

PERF-1: Performance Certificate of Compliance

ENV-1-C: Envelope Certificate of Compliance (2 parts)

MECH-1-C: Mechanical Certificate of Compliance (1 part)

MECH-2-C: Air System, Water Side System, Service Hot Water & Pool Requirements (3 parts)

MECH-3-C: Mechanical Ventilation (1 part)

Mechanical Only

PERF-1: Performance Certificate of Compliance

MECH-1-C: Mechanical Certificate of Compliance (1 part)

MECH-2-C: Air System, Water Side System, Service Hot Water & Pool Requirements (3 parts)

MECH-3-C: Mechanical Ventilation (1 part)

Possibly existing ENV and/or existing LTG forms: (for partial compliance alteration)

Mechanical and Lighting

PERF-1: Performance Certificate of Compliance

MECH-1-C: Mechanical Certificate of Compliance (1 part)

MECH-2-C: Air System, Water Side System, Service Hot Water & Pool Requirements (3 parts)

MECH-3-C: Mechanical Ventilation (1 part)

LTG-1-C: Lighting Certificate of Compliance (3 parts)

LTG-4-C: Lighting Controls Credit Worksheet (if control credits used)

LTG-6-C (3 parts): Tailored Method Summary and Worksheet (if tailored lighting used)

Existing ENV forms: (for partial compliance alteration)

DRAFT

9.4.2 Compliance Forms

ENV-1-C: Envelope Certificate of Compliance

The performance ENV-1-C Envelope Compliance Summary form has one part. It summarizes the opaque surfaces including surface type, construction type, area, azimuth, and U-factor. Next it summarizes the fenestration surfaces

including fenestration type, area, azimuth, U-factor, frame type and solar heat gain coefficient. Lastly, it includes exterior shading and overhangs including shade type, solar heat gain coefficient, overhang height and overhang width.

For a description of the information contained on the ENV-1-C Envelope Compliance Summary, see ENV-1-C, Part 2 of 2.

ENV-2-C: Envelope Component Method

The envelope component method can be used when fenestration and skylight areas do not exceed prescriptive limits, when roofing meets mandatory performance criteria of Section 118, and when all envelope components meet prescriptive criteria in Section 143 of the Standards.

ENV-3-C: Overall Envelope Method

~~This form is identical to the form required in the prescriptive approach.~~This form is used when the overall envelope approach is used to show envelope compliance. This allows for tradeoffs between different envelope components.

MECH-1-C: Mechanical Certificate of Compliance

The MECH-1-C Mechanical Compliance Summary form is in one part.

For a description of the information contained on the MECH-1-C Mechanical Certificate of Compliance, consult the computer program's compliance supplement.

MECH-2-C: MECH-2-C: Air System, Water Side System, Service Hot Water & Pool Requirements

The MECH-2-C identifies the mechanical equipment modeled in the alternative computer program to show compliance.

For more information on the MECH-2-C, refer to computer program's compliance supplement.

DRAFT

MECH-3-C: Mechanical Ventilation

The MECH-3-C Mechanical Ventilation contains the information on the design outdoor ventilation rate for each space. Refer to the computer program's compliance supplement for more information.

LTG-1-C: Lighting Certificate of Compliance

The LTG-1-C Lighting Certificate of Compliance form is a single part form. It is used to describe the lighting fixtures and control devices designed to be installed in the building.

For a description of the information contained on the LTG-1-C Lighting Certificate of Compliance, see LTG-1-C, Part 2.

If control credits were input by the program user, a copy of the LTG-4-C must accompany the permit application. If the tailored method was used, a copy of the LTG-6-C must accompany the permit application along with a complete set of lighting plans and specifications.

9.4.3 Performance Inspection

Performance approach inspect-ion is identical to other inspections required by the Standards. For information on inspection of envelope, mechanical and lighting systems, refer to Chapter 2, Compliance and Enforcement.

When tailored lighting is used to justify increases in the lighting load, a lower lighting load cannot be modeled for credit. The standard design building uses the lesser of allowed ~~watts~~ Watts per ft^2 or actual lighting power to be installed in the building. The proposed design building uses the actual lighting power to be installed as detailed on the lighting plans. This value must be equal to or greater than the allowed ~~watts~~ Watts per ft^2.

DRAFT

10. Acceptance Requirements

Acceptance requirements ensure that equipment, controls and systems operate as required by the Standards. The activities specified in these requirements have three aspects:

- Visual inspection of the equipment and installation
- Review of the certification requirements, and
- Functional tests of the systems and controls

New Acceptance requirements for 2008

- Building Envelope Acceptance Test for Fenestration (ENV-2A)
- Seven new Mechanical Acceptance Test Requirements (MECH-9A through MECH-15A)
- Two new Outdoor Lighting Acceptance Test (OTLG-2A and OLTG-3A)

The Envelope acceptance requirements are outline in §116 of the Standards. Mechanical acceptance requirements are outlined in section §121, §122 & §§125 and the indoor and outdoor of the Standards. Llighting acceptance requirements are outlined in §1341. Both The envelope, mechanical and lighting acceptance requirements are detailed in Appendix NA7J of the Reference Non-Residential ACM ManualAppendix.

The acceptance process is a way of assuring that the installation was done in a way that meets the requirements of the Standards. This process assures not only that the appropriate equipment was purchased and installed, but that that equipment is operating properly.

10.1 Overview

Acceptance Requirements are defined as implementation of targeted inspection checks and functional and performance testing to determine whether specific building components, equipment, systems, and interfaces between systems conform to the criteria set forth in the Standards and to related construction documents (plans or specifications). Acceptance Requirements improve code compliance effectiveness and help meet the expected level of performance. Acceptance requirements are defined as the application of targeted inspection checks and testing to determine whether specific building systems conform to the criteria set forth in the Standards and to plans or specifications.

Third party review is not required in the Standards except for Air Distribution System Duct Leakage Sealing, which will be verified by a HERS rater as part of the diagnostic testing see §144(k). The Standards permit the Acceptance Agent Acceptance Agent to be the installing contractor, design professional or an agent selected by the owner. The Acceptance Agent Acceptance Agent must be licensed in the State of California as a civil engineer, mechanical engineer,

licensed architect or a licensed contractor performing the applicable work or a person managing work on a structure or type of work described pursuant to Business and Professions Code sections 5537, 5538, and 6737.1as indicated in Reference Nonresidential Appendix NA7.

Th~~is~~e ~~Acceptance Agent~~Acceptance Agent's role should focus on the following areas:

- Review the bid documents to make sure that sensor locations, devices and control sequences are properly documented,
- Review the installation, and ~~perform~~ acceptance test~~s and document results~~documentation, and
- Document the operating and maintenance information, complete installation certificate and indicate test results on the Certificate of Acceptance, and submit the certificate to the building department prior to receiving a final occupancy permit.

The individual tests may be performed by one or more Acceptance Testers under the review of the Acceptance Agent who must co-sign the form. Typical the Acceptance Testers are contractors, engineers or commissioning agents. The individuals who perform the tests are not required to be ~~lisenced~~licensed ~~contactors~~contractors or design professionals only the individual who is signing the Acceptance form must be licensed~~.~~

Acceptance testing is not intended to take the place of commissioning or test and balance procedures that a building owner might incorporate into a building project. It is an adjunct process focusing only on demonstrating compliance with the Standards.

DRAFT

This chapter summarizes the requirements for acceptance testing including:

- Section 10.1~~1.1~~ Overview~~Overview~~ provides an overview of roles, responsibilities and reasons for the acceptance requirements.
- Section 01.2 10.2 Acceptance Testing Process~~Acceptance Testing Process~~ discusses how acceptance testing fits into plan review, construction inspection, system and ~~equipment testing~~functional testing and certification (Certificate of Occupancy).
- Section **10.3**~~1.3~~ **Forms**~~Forms~~ include~~s~~ a list of forms necessary for completing the acceptance requirements.
-
- Section **10.4**~~1.4~~ - **Envelope and Mechanical** Acceptance Testing~~MEnvelope and Mechanical Acceptance Testing~~ addresses requirements for inspecting and testing mechanical systems and ~~equipment~~controls. **Envelope and Mechanical** Acceptance Testing~~Envelope Acceptance Testing~~ addresses requirements for inspecting for fenestration label certificate and verifying the installed matches the energy documentation.
-
- Section **10.5**~~1.5~~ **Lighting Acceptance Testing**~~Lighting Acceptance Testing~~ addresses requirements for inspecting and testing lighting systems and ~~equipment~~controls.
- Outdoor Lighting Acceptance Testing addresses requirements for inspecting and testing outdoor lighting systems.
-

- Section 10.6~~1.6~~ **Test Procedures for Envelope and** Mechanical~~Test Procedures for Mechanical~~ Systems
- Section 1.7 Test Procedures for Lighting Equipment
- Section 10.8~~1.8~~ **Envelope and Mechanical** Forms for Acceptance Requirements~~Mechanical Forms for Acceptance Requirements~~ details the compliance forms used to document the mechanical acceptance testing.
- Section 10.9~~1.9~~ **Lighting Forms for Acceptance Requirements**~~Lighting Forms for Acceptance Requirements~~ details the compliance forms used to document the lighting acceptance testing.

10.1.1 Roles and Responsibilities

~~The installing contractor, engineer of record or owners agent~~ The Acceptance Agent s~~can act as the Acceptance Agent who s~~hall be responsible for reviewing and documenting the inspection and testing results of the acceptance requirement procedures on the Acceptance Test forms (see Section 8.3 Forms). To make sure that the tests are performed, it is critical that the engineer of record or Acceptance Agent document on the ~~MECH-1-C~~Acceptance form and in the construction documents who is to perform these tests and the details of the tests to be performed. This could be integrated into the specifications for testing and air balance, energy management and control system, equipment startup procedures or commissioning. It is quite possible that the work will be performed by a combination of the Test and Balance (TAB) contractor, mechanical/electrical contractor and the Energy Management Control System (EMCS) contractor so roles and responsibilities should clearly be called out to get accurate pricing.

A Certificate of Acceptance signed by the ~~Acceptance Agent~~ Acceptance Agent is required to be submitted to the building department in order to receive the final Certificate of Occupancy. Building departments shall not release a final Certificate of Occupancy unless the submitted Certificate of Acceptance demonstrates that the specified systems and equipment have been shown to be performing in accordance with the Standards. In addition to the Certificate of Acceptance, each test form requires a signature and State of California Contractor's License number or State of California Professional Registration License number~~license number~~, as appropriate, for the party who has ~~performed~~ reviewed the tests. It is important to note that the party or parties who perform the tests are not required to have a contactor's, Architect's or Engineer's license. The license is only required for the person that is eligible to sign the Certificate of Acceptance according to NA7. ~~reviewing each test and the submission package as a whole.~~ Design professionals and contractors should review the contract provided by the owner to make sure it covers the scope of the acceptance testing procedures.

Building officials have authority to require the ~~Acceptance Agent~~ Acceptance Agent to demonstrate competence, to the satisfaction of the building official. ~~Building officials should place extra scrutiny on situations where there may be either real or perceived compromising of the independence of the Acceptance Agent, and exercise their authority to disallow a particular Acceptance Agent from being used in their jurisdiction or disallow Acceptance Agent practices that~~

~~the building official believes will result in compromising of Acceptance Agents independence.~~

10.1.2 When Are Acceptance Tests Required?

In general the Acceptance Tests apply to new equipment and systems installed in either new construction or retrofit applications. The scope of each test and the specific exceptions to this rule are noted in the following paragraphs. If an acceptance test is required, the appropriate form ~~MECH -1-A~~ along with the each specific test must be submitted to the building department before a final occupancy permit can be granted.

Envelope Test Procedures

ENV-2A: Fenestration Acceptance

- Fenestration product shall have either an NFRC Label Certificate or an Energy Commission's Label Certificate FC-1 or FC-2. Verification of the fenestration product matches energy compliance specifications.

Mechanical Test Procedures

MECH-2-A: Ventilation System Acceptance Document

- Variable Air Volume Systems Outdoor Air Acceptance

~~New Construction and Retrofit:~~

- *New Construction and Retrofit:* Applies only to new Variable Air Volume (VAV) systems
-
- Constant Volume Systems Outdoor Air Acceptance
- *New Construction and Retrofit:* Applies only to new Constant Air Volume (CAV) systems

~~New Construction and Retrofit:~~

~~•Applies only to new Constant Air Volume (CAV) systems~~

MECH-3-A: ~~Packaged HVAC System~~Constant-~~v~~Volume, Single-~~z~~Zone, Unitary Air Conditioner and Heat Pump Systems ***Acceptance Document***

~~•Constant Volume Packaged HVAC Systems Acceptance~~

- *New Construction and Retrofit:* Applies only to new constant-volume, single-zone, unitary units with direct expansion (DX) cooling. These units may be cooling only or heating and cooling.

~~New Construction and Retrofit:~~

DRAFT

~~• Applies only to new single-zone units with direct expansion (DX) cooling. These units may be cooling only or heating and cooling.~~

~~*MECH-4-A: Air-Side Economizer* Acceptance~~

~~•*New Construction and Retrofit:* All new equipment with air-side economizers must comply. Units with economizers that are installed at the factory and certified with the Commission do not require equipment testing but do require construction inspection.~~

MECH-~~5~~4-A: Air Distribution Acceptance

- *New Construction (§144K):* Only required for single zone units (heating only, cooling only or heating and cooling) serving 5,000 ft2 of space or less where 25% or more of the duct surface area is in one of the following spaces:
- Outdoors, or
- In a space directly under a roof where the U-factor of the roof is greater than the U-factor of the ceiling, or
- In a space directly under a roof with fixed vents or openings to the outside or unconditioned spaces, or
- In an unconditioned crawlspace; or
- In other unconditioned spaces.

Downshot units with ducts in spaces with insulation on the walls and roof need not be sealed. Units with extensive ductwork on the roof or in an uninsulated attic may need to be sealed (it depends on the surface area ratio).

- *Retrofit (§149):* The same scope limitations for zone size, unit type and ductwork location apply as in new construction. With these constraints, requirements for sealing and testing apply to:

DRAFT

~~*Retrofit:* The same scope limitations for zone size, unit type and ductwork location apply as in new construction. With these constraints, requirements for sealing and testing apply to:~~

- New ductwork serving either new or existing single-zone units (§149D)
- New ductwork as an extension of existing ductwork with either new or existing single-zone units, and
- Existing ductwork where the single-zone unit is being replaced or having a major component replaced (§149E) including:
- Cooling coil
- Furnace
- Condenser coil (split system) or
- Condensing unit (split system)

Different levels of leakage requirements apply to new and existing ductwork (see §149D).

MECH-5-A: Air Economizer Controls Acceptance Document

- *New Construction and Retrofit:* All new equipment with air economizer controls must comply. Units with economizers that are installed at the

factory and certified with the Commission do not require functional testing but do require construction inspection.

MECH-6-A: ~~Demand Control~~Demand-controlled Ventilation Systems Acceptance Document

- *New Construction and Retrofit:* All new DCV controls installed on new or existing ~~packaged~~ HVAC systems must be tested.

MECH-7-A: Supply Fan Variable Flow Controls Acceptance Document

- *New Construction and Retrofit:* All new VAV fan volume controls installed on new or existing systems must be tested.

~~• All new VAV fan volume controls installed on new or existing systems must be tested.~~

MECH-8-A: ~~Hydronic System Control~~Valve Leakage Acceptance Document
~~•Variable Flow Controls~~

- *New Construction and Retrofit:* Applies to chilled and hot water systems ~~that consist of more than three control valves~~that are designed for variable flow. ~~A~~It also applies to new boilers and chillers where there is more than one boiler or chiller in the plant and the primary pumps are connected to a common header.

~~• Applies to chilled and hot water systems.~~
~~•Hydronic System Automatic Isolation Controls~~
~~•New Construction and Retrofit:~~
~~• Applies to new boilers and chillers where there is more than one boiler or chiller in the plant and the primary pumps are connected to a common header.~~

MECH-9-A: Supply Water Temperature Reset Controls Acceptance Document

- *New Construction and Retrofit:* Applies to ~~any~~chilled or hot water systems that has a supply temperature reset control strategy programmed into the building automation system ~~(i.e. chilled, hot, or condenser water)~~.

MECH-10-A: Hydronic System Variable Flow Controls Acceptance Document

- *New Construction and Retrofit:* Applies to any water system~~s~~ that has been designed for variable flow, where the pumps are controlled by variable frequency drives (i.e. chilled and hot water systems; water-loop heat pump and air-conditioning systems).

~~•Hydronic System Supply Water Temperature Reset Controls~~

~~•~~

~~•~~*MECH-11A:* Automatic Demand Shed Control Acceptance

- *New Construction and Retrofit:* Applies to construction inspection of the EMCS interface shed controls and testing.

DRAFT

MECH-12A: Fault Detection & Diagnostics for DX Units

- *New Construction and Retrofit:* Applies to verifying the FDD hardware matches the manufacturer's cut sheet plans specifications. Fault detection is the primary eligibility criteria for DX units to meet the credit requirements in the performance calculation method.

MECH-13A: Automatic Fault Detection & Diagnostics for Air Handling & Zone Terminal Units

- *New Construction and Retrofit:* Applies to verifying that the air handler and the zone terminal units are functional. Only 5% of the terminal boxes (VAV box) shall be tested.

MECH-14A: Distributed Energy Storage DX AC Systems Test

- *New Construction and Retrofit:* Applies to constant and variable volume, direct expansion systems with distributed energy storage (DES/DXAC). This acceptance requirement is an addition to economizer and packaged equipment acceptance.

MECH-15A: Thermal Energy Storage (TES) Systems

- *New Construction and Retrofit:* Applies to thermal energy storage systems that are in conjunction with chilled water air conditioning systems and must meet all eligibility criteria.

~~New Construction and Retrofit:~~

~~•Applies to new constant flow chilled and hot water systems that have a design capacity greater than or equal to 500,000 Btu/hr. Note this is not required for systems that are designed for variable flow.~~

~~•Water loop Heat Pump Controls~~
~~•New Construction and Retrofit:~~

~~• Applies to all new water-loop heat pump systems where the combined loop pumps are greater than 5 hp.~~
~~•Pump Variable Frequency Drive Control~~

~~New Construction and Retrofit:~~

~~•Applies to all new distribution pumps on new variable flow chilled, hydronic heat pump or condenser water systems where the pumps motors are greater than 5 hp.~~

DRAFT

Lighting Test Acceptance Procedures

All of the lighting acceptance tests apply to new equipment and controls installed on new or existing lighting systems. These tests include:

LTG-2-A: Lighting Control Acceptance Document

- *New Construction and Retrofit:* Applies to Occupancy Sensor, Acceptance Manual Daylight Controls Acceptance, and Automatic Time Switch Control Acceptance. Functional testing and verification is required.

LTG-3-A: Automatic Daylight Control Acceptance Document

- *New Construction and Retrofit:* Applies to properly located controls, field calibrated and set appropriate lighting levels.

Outdoor Lighting Acceptance Test Procedures

OLTG-2-A: Lighting Controls

- New Construction and Retrofit: Applies to functional testing and verification of motion sensor location and ensure the sensor coverage is not blocked by obstruction. Verify the sensor signal sensitivity is adequate.

OLTG-3-A: Automatic Daylighting

- *New Construction and Retrofit:* Applies to verification of the outdoor lighting shut-off control and turning off during daytime hours. Verify the astronomical and standard shutoff controls are programmed for weekdays, weekends and holiday schedules.

10.1.3 Why Test for Acceptance?

Building control systems are an integral component of a new building. From simple thermostatic controls and manual light switches to complex building automation systems, controls are an integral part of building health, safety and comfort. They also are a key component of a building's energy efficiency. A PIER report titled, Integrated Design of Small Commercial HVAC Systems, Element 4, http://www.energy.ca.gov/reports/2003-11-17_500-03-082.PDF found the following problems with package rooftop equipment:

DRAFT

- ***Economizers.*** Economizers show a high rate of failure in the study. Of the units equipped with economizers, 64% were not operating correctly. Failure modes included dampers that were stuck or inoperable (38%), sensor or control failure (46%), or poor operation (16%). The average energy impact of inoperable economizers is about 37% of the annual cooling energy.
- ***Refrigerant charge.*** A total of 46% of the units tested were improperly charged, resulting in reductions in cooling capacity and/or unit efficiency. The average energy impact of refrigerant charge problems was about 5% of the annual cooling energy.
- ***Low airflow.*** Low airflow was also a common problem. Overall, 39% of the units tested had very low airflow rates (< 300 cfm/ton). The average ~~flowrate~~flowrate of all units tested was 325 cfm/ton, which is

about 20% less than the ~~flowrate~~flowrates generally used to rate unit efficiency. Reduced airflow results in reduced unit efficiency and cooling capacity. The annual energy impact of low airflow is about 7% of the annual cooling energy.

- ***Cycling fans.*** System fans were found to be cycling on and off with a call for heating or cooling in 38% of the units tested. The supply of continuous fresh air during occupied hours relies on continuous operation of the HVAC unit supply fan.
- ***Unoccupied fan operation.*** Fans were also observed to run continuously during unoccupied periods in 30% of the systems observed. While this practice improves the ventilation of the space, it represents an opportunity to save energy through thermostat setback and fan cycling during unoccupied periods.
- ***Simultaneous heating and cooling.*** Adjacent units controlled by independent thermostats were observed to provide simultaneous heating and cooling to a space in 8% of the units monitored in the study. This was largely due to occupant errors in the set up and use of the thermostats, and poor thermostat placement during construction.
- ***No outdoor air.*** A physical inspection revealed that about 8% of the units were not capable of supplying any outdoor air to the spaces served. In some cases, outdoor air intakes were not provided or were sealed off at the unit. In other instances, outdoor air dampers were stuck shut, preventing outdoor air intake.

- Acceptance testing is a way of assuring that targeted building systems were designed, constructed and started up to the intent of the Standards.

10.2 Acceptance Testing Process

The acceptance requirements require four major check-points to be conducted. They are:

- Plan review
- Construction inspection
- Functional and verification~~Testing~~testing
- Certificate of Occupancy

These will be discussed in more detail below.

DRAFT

10.2.1 Plan Review

~~The installing contractor, engineer of record or owners agent~~ The installing contractor, engineer of record or owners agent or t~~T~~he Acceptance Agent shall be responsible for reviewing the plans and specifications to assure they conform to the acceptance requirements. This is typically done prior to signing a Certificate of Compliance.

In reviewing the plans, the designer will be noting on the ENV-1C, MECH-1-C ~~and~~, LTG-1-C and the OTLG-1C code compliance forms, all of the respective envelope, mechanical and lighting systems that will require acceptance tests,

and the parties responsible for performing the tests. An exhaustive list is required so that that when the acceptance tests are bid, all parties are aware of the scope of acceptance testing on the project.

10.2.2 Construction Inspection

~~The installing contractor, engineer of record or owners agent~~ The installing contractor, engineer of record or owners agent or t~~T~~he Acceptance Agent shall be responsible for performing a construction inspection prior to testing. Reviewing the acceptance requirements with the contractor prior to installation is very useful on several counts.

In some cases, it is most economical to perform testing immediately after installation, assuming the installation of any associated systems and equipment necessary for proper system operation is complete.~~.~~

Awareness of the acceptance test may result in the contractor identifying a design or construction practice that would not comply with the acceptance testing requirements prior to installation.

Purchasing sensors and equipment with calibration certificates reduces the amount of time required for site calibration and may keep overall costs down.

The purpose of the construction inspection is to assure that the equipment that is installed is capable of complying with the requirements of the Standards. Construction inspection also assures that the equipment is installed correctly and is calibrated.

10.2.3 Functional Testing

A~~The installing contractor, engineer of record or owners agent~~ n Acceptance Tester shall be responsible for ~~undertaking~~ performing all required acceptance requirement procedures. The same Acceptance Tester does not need to perform all of the tests. ~~They~~ For each test, the Acceptance Tester shall be responsible for identifying all performance deficiencies, ensuring that they are corrected and ~~again~~ implementing the acceptance requirement procedures again until all specified systems and equipment are performing in accordance with the Standards.

Either the installing contractor, engineer of record or owners agent or ~~The installing contractor, engineer of record or owners agent~~ the Acceptance Agent or Acceptance Tester shall be responsible for documenting the results of the acceptance requirement procedures on the appropriate acceptance test forms and indicate satisfactory completion by signing the Certificate of Acceptance. Regardless of who performs the tests, the Acceptance Agent must review the forms and sign off on them.

DRAFT

10.2.4 Certificate of Occupancy

Building departments shall not release a final Certificate of Occupancy until a Certificate of Acceptance is submitted that demonstrates that the specified systems and equipment have been shown to be performing in accordance with

the Standards. The ~~The installing contractor, engineer of record or owners agent~~ Acceptance Agent upon successful completion of ~~undertaking~~ all required acceptance requirement procedures shall record their State of California Contractor's License number or their State of California Professional Registration License Number on each Certificate of Acceptance that they issue.

10.3 Forms

Acceptance test~~s~~ results are documented using a series of forms. These include a Certificate of Acceptance and individual worksheets to assist in field verification. Table 6-1~~Table 6-1~~ shows the acceptance forms and reference Standards sections:

DRAFT

Table 6-11 – Acceptance Forms

Component	Form Name	Standards Reference	Reference Nonresidential Appendix NA7
Certificate of Acceptance	Combination LTG-1A , OTLG -1A, MECH-1A, and ENV-1A (Combined??)	§10-103	N/A
Envelope	ENV-2A – Fenestration Acceptance	10-111 & §116	NA7.4.1
Mechanical	MECH-2A - Ventilation Systems - Variable Air and Constant Volume Systems	10-103(b)4 & §121(b)2 & §125(a)1	NA7.5.1.1 NA7.5.1.2
-	MECH-3A – Constant-Volume, Single-Zone, Unitary A/C and Heat Pumps	§121(c)2 & §122 & §125(a)2	NA7.5.2
-	MECH-4A - Air Distribution Systems -	§125(a)3 §144(k)	NA7.5.3
-	MECH-5A – Air Economizer Controls	§125(a)4 & §144(e)	NA7.5.4
-	MECH-6A - Demand Control Ventilation (DVC)	§121(c)4 §121(c)4E & §125(a)5	NA7.5.5
	MECH-7A - Supply Fan Variable Flow Controls (VFC)	§125(a)6 & §144(c)2C §144(c)2D	NA7.5.6
-	MECH-8A – Valve Leakage Test	§125(a)8 §125(a)9 & §144(j)1 §144(j)5 §144(j)6	NA7.5.7
	MECH-9A - Supply Water Temperature Reset	§125(a)8 & 144(j)4	NA7.5.8
	MECH-10A - Hydronic System Variable Flow Control	§125(a)7 & §144(j) §144(j)1 §144(j)5 §144(j)6	NA7.5.9
	MECH-11A - Automatic Demand Shed Control Acceptance	§122(h) & 125(a)10	NA7.5.10
	MECH-12A - Fault Detection & Diagnostics for DX Units	§125(a)11	NA7.5.11
	MECH-13A - Automatic Fault Detection & Diagnostics for Air Handling & Zone Terminal Units	§125(a)12	NA7.5.12
	MECH-14A - Distributed Energy Storage DX AC Systems Test	§125(a)13	NA7.5.13
	MECH-15A - Thermal Energy Storage (TES) Systems	§125(a)14	NA7.5.14
Indoor Lighting	LTG-2A - Lighting Controls	§119(d) §119(e) & §131(d)	NA7.6.2, 6.3 and 6.4
	LTG-3A - Automatic Daylighting	§119(f)	NA7.6.1
Outdoor Lighting	OLTG-2A – Outdoor Motion Sensor Acceptance	§119(d) and §132(a)	NA7.7.1
	OLTG-3A– Outdoor Lighting Shut-off Controls	§132(c)	NA7.7.2
Section	Form Name	Standards Reference	ACM Manual Reference Non-residential Appendix Reference

DRAFT

Lighting	LTG-1-A Certificate of Acceptance	§10-103	N/A
	LTG-2-A Lighting Controls	§119(d), §119(e) and §131(d)	NJ NA NA 7.6.2, 7.6.3 and 7.6.4
	LTG-3-A Automatic Daylighting	§119(ef)	NJ NA NA 7.66.1
Mechanical	MECH-1-A Certificate of Acceptance	§10-103	N/A
	MECH-2-A Ventilation Systems – Variable and Constant Volume	§121(b)2 and 125(a)1	NJ NA NA3.17.5.1.1 and 3.2NA 7.5.1.2
	MECH-3-A Packaged HVACConstant volume, Single-zone, Unitary Air Conditioner and Heat Pump Systems	§121(bc)2, §122 and §125(a)2	NJ NA NA4.17.5.2
	MECH-4-A Air Distribution Systems MECH-4-A Air-Side Economizer	§144(ek) and §125(a)3	NA1, NA2 and NJ NA NA7.17.5.3
	MECH-5-A Air Economizer ControlsMECH-5-A Air Distribution Systems	§144(ke) and §125(a)4	NJ NA NA5.17.5.4
	MECH-6-A Demand ControlDemand-controlled Ventilation Systems	§121(c)43, §121(c)4 and §125(a)5	NJ NA NA8.17.5.5
	MECH-7-A Supply Fan VFDVariable Flow Controls	§144(c)2C, §144(c)2D and §125(a)6	NJ NA NA9.17.5.6
	MECH-8-A Hydronic Systems ControlValve Leakage Tests	§144(j)1, §144(j)5, §144(j)6, §125(a)8 and §125(a)9	NJ NA NA10.1 – 10.57.5.7
	MECH-9-A Supply Water Temperature Reset Controls	§144(j)4 and §125(a)8	NA NA7.5.8
	MECH-10-A Hydronic System Variable Flow Controls	§144(j)1, §144(j)5, §144(j)6, §144(j) and §125(a)7	NA NA7.5.9
	MECH-11-A Fault Detection and Diagnostics (FDD) for Packaged Direct Expansion Units	§125(a)11	NA7.5.10
	MECH-12-A Automatic Fault Detection and Diagnostics (FDD) for Air Handling Units and Zone Terminal Units	§125(a)12	NA7.5.11
	MECH-13-A Distributed Energy Storage DX AC Systems	§125(a)13	NA7.5.12
	MECH-14-A Thermal Energy Storage (TES) Systems	§125(a)14	NA7.5.13

The forms listed above can be found in Appendix A.

DRAFT

10.4 Envelope and Mechanical Acceptance Testing Overview

10.4.1 Administration

§10-103-(b)

The administrative requirements contained in the Standards require the envelope and mechanical plans and specifications to contain:

- New Envelope Acceptance requirements for Fenestration; verify label certificate including thermal performance matches building plans and energy compliance.
- Completed acceptance testing forms for mechanical systems and equipment shown in Table 6-1~~Table 1-1~~~~Table 1-2~~, record drawings are provided to the building owners within 90 days of receiving a final occupancy permit,
- ~~operating~~ Operating and maintenance information are provided to the building owner, and
- ~~installation~~ Installation certificates for mechanical equipment (for example factory installed economizers)~~.~~
-

DRAFT

~~*Table 1-2 – Mechanical Acceptance Tests*~~

~~Outdoor Air for Variable Air Volume Systems~~
~~Outdoor Air for Constant Volume Systems~~
~~Package Constant Volume, Single Zone, Unitary Air Conditioner and Heat Pump Systems Controls~~
~~Air Distribution Systems~~
~~Air Side Economizer Controls~~
~~Demand controlled Control Ventilation Systems~~
~~Variable Frequency Drive Fan SystemsSupply Fan Variable Flow Controls~~
~~Hydronic System Variable Flow ControlsValve Leakage Tests~~
~~Hydronic Pump Isolation Controls and DevicesSupply Water Temperature Reset Controls~~
~~Supply Water Reset ControlsHydronic System Variable Flow Controls~~
~~Water Loop Heat Pump Control~~
~~Variable Frequency Drive Pump Systems~~

10.4.2 Field Process

The construction inspection is the first step in performing the acceptance tests. In general, this inspection should identify:

- ~~Mechanical equipment~~Fenestration product, HVAC Equipment, and ~~devices~~ controls are properly specified, properly located, identified, correctly installed, calibrated and set points and schedules established.

- Documentation is available to identify settings and programs for each device, and
- For some air distribution systems (as identified in §116(a) and §144(k)), this may include select tests to verify acceptable leakage rates while access is available.

Functional and Verification Testing is to be performed on the following devices:

Envelope

- ENV-2A — Envelope: Fenestration - NFRC or Energy commissions Label Certificate including site-built fenestration. Label Certificate matches building plans and energy compliance documentation.

Mechanical

- MECH-2A -Minimum ventilation controls for all constant and variable air volume systems
- MECH-3A -Zone temperature and scheduling controls for all ~~package~~ constant volume, single-zone, unitary air conditioner and heat pump systems
- MECH-4A -Duct leakage on a subset of small single-zone systems depending on the ductwork location
- ~~–~~
- MECH-5A - Air~~-side~~ economizer controls for all economizers that are not factory installed and tested
- MECH-6A - ~~Demand control~~All demand-controlled ventilation control systems
- MECH-7A All supply fan variable flow controls ~~Fan volume controls for variable air volume systems~~
- MECH-8A ~~-~~Valve leakage~~Variable flow controls~~ for ~~chilled water and hot water~~ hydronic variable flow systems ~~serving more than 3 coil control valves and~~ and isolation valves on chillers and boilers in plants with more than one chiller or boiler being served by the same primary pumps through a common header~~.~~
- ~~Isolation valves on chillers and boilers in plants with more than one chiller or boiler being served by the same primary pumps through a common header~~
- MECH-9A -Supply water temperature reset control strategies programmed into the building automation system for any water systems (i.e. chilled, hot, or condenser water)~~.constant flow chilled and hot water systems with a design capacity greater than 500,000 Btu/hr~~
- MECH-10A -Hydronic Variable flow controls on any water system where the pumps are controlled by variable frequency drives (i.e. chilled and hot water systems; water-loop heat pump systems)~~.~~
- MECH-11A -Automatic Demand Shed Control
- MECH-12A -Fault Detection & Diagnostic for DX Units
- MECH-13A -Automatic Fault Detection and Diagnostic Systems (AFDD)~~ systems~~
- MECH-14A -Distributed Energy Storage DEC/DX AC systems
- MECH-15A -Thermal Energy Storage (TES) systems

DRAFT

~~Water-loop heat pump isolation valve controls for systems with a combined circulation loop pump horsepower greater than 5 hp~~

~~•Variable frequency drive pump systems~~

10.4.3 Envelope and Mechanical Acceptance Test Issues

Acceptance testing must be tailored for each specific design, job site, and climactic conditions. While the steps for conducting each test and the acceptance criteria remain consistent, the application of the tests to a particular site may vary. The following section discusses some of the known issues that occur when the acceptance tests are applied to a project.

General Issues- Envelope

Importances to the New Envelope Fenestration Acceptance requirements are:

- Verify thermal performance (U-factor and SHGC) matches energy plans, energy compliance documentation and matches purchase order or receipt.
- If the to be installed fenestration thermal performance is equal or better than the specified or listed on the energy documentation then no further re-compliance is required.
- If the to be installed fenestration is less than the energy documentation then re-compliance is required. Installing less efficient fenestration can increase the building's cooling load and change the overall energy use of the building.
- If using the Performance Approach then the weighted average thermal performance per orientation can be used as long it's equal or better than the specified values as noted above; otherwise, re-compliance is required.

DRAFT

General Issues - Mechanical

Combining tests to reduce testing costs

Many of the acceptance tests overlap in terms of activities. For example, both N~~J.3.1~~A7.5.1.1 Ventilation systems for Variable Air and Constant Volume Systems ~~Outdoor Air~~ Acceptance and N~~J.9.1~~A7.5.6 Supply Fan Variable Flow Controls (FVC) Acceptance require that the zone controls be overridden to force the system into full design flow and low flow conditions. Since the bulk of the time for either test is the process of driving the ~~VAV boxes~~zone controls (e.g. VAV boxes) into a set position it makes sense to combine these two tests: performing the superset of activities with the boxes at both design and part-load conditions. There are a number of places where combining tests will save time. These are summarized here and described again in the individual test descriptions ~~below~~.

- Tests that require override of zone controls:

- NJ.3.1NA NA7.5.1.1 Ventilation systems for Variable Air Volume Systems Outdoor Air Acceptance and NJ.9.1NA NA7.5.6 Supply Fan Variable Flow Controls Acceptance.

- Tests that require override of the OSA damper:
  - NJ.3.1NA NA7.5.1.1 Variable Air Volume Systems Outdoor Air Acceptance (or NJ.3.2NA NA7.5.1.2 Constant Volume Systems Outdoor Air Acceptance),
  - NJ.7.1NA NA7.5.4 (Air Side) Economizer Controls Acceptance, and
  - NJ.8.1NA NA7.5.5 Demand ControlDemand -Ceontrolled Ventilation Systems Acceptance.
- Tests that require changing the unit mode of operation:
  - NJ.4.1NA NA7.5.2 Constant Volume, Single-zone, Unitary Packaged HVAC Air Conditioner and Heat Pumps Systems Acceptance and
  - NA NA7.5.4 Air Economizer Controls NJ.7.1 Air Side Economizer Acceptance.
- Tests that require deadheading the circulation pump and overriding control valves: NJ.10.1 Variable Hydronic Flow Controls Acceptance (alternate 2), NJ.10.2 Automatic Isolation Controls Acceptance
  - NA NA7.5.7 Valve Leakage Tests and NJ.10.4 Water-loop Heat Pump Controls Acceptance (alternate 2),. Note that systems with flow measurement capabilities can use alternate 1 for both NJ.10.1 Variable Hydronic Flow Controls Acceptance and NJ.10.4 Water-loop Heat Pump Controls Acceptance which do not require deadheading of the pump but do require closing control valves.
  - NA NA7.5.9 Hydronic System Variable Flow Controls Acceptance.

DRAFT

Internal control delays

Be aware of the potential for delays programmed into many control sequences. The purpose of delays is to prevent the system from controlling too rapidly and becoming unstable. With delays between five to 30 minutes, the acceptance testing can be prolonged considerably.

Examples include the normal time that it takes to stroke a damper (typically several minutes end to end) and anti-recycle timers on refrigerant compressors (typically on the order of 5 to 15 minutes).

Initial conditions

Each test instructs the contractor to return the systems to normal operating condition based on the initial schedules, setpoints, and control parameters. These initial settings shall be recorded prior to initiating the testing process.

Obtain correct control sequences before testing

It is essential to know exactly what the control sequences are before testing begins. Otherwise, the contractor will not be able to customize the test to the particular systems or verify that the systems work as intended. In many cases, the testing will be performed in conjunction with the controls contractor. Also

many of these tests can be performed as part of the equipment/system start-up process.

- Internal e~~E~~lectronic controls are usually documented in the equipment O&M manual.
- With pneumatic controls, you need to review the control drawings to ascertain how the system is being controlled.
- With DDC controls, it is best to review the control programming that is currently loaded in the controllers. It is important to note that the actual control logic is often different from the sequences on the design plans and specifications for a number of reasons including:
    - poorly written or incomplete sequences on the design drawings
    - standard practices by the installing EMCS contractor
    - issues that arose in the field during control system start-up and commissioning.

Functional Testing based on incorrect sequences will not necessarily yield a valid result.

~~Time to Complete~~Estimated Time to Complete

To give the full picture to contractors, the test summaries below ("At-a-Glance") include estimates of the time to complete construction observation as well as ~~equipment testing~~functional testing on each system. These estimates are made for a specific test on a specific system ~~; they~~and need to be aggregated to estimate the total time for completion on all systems associated with the entire building. These estimates need to be used with caution; times will vary depending on a number of factors including the complexity of the controls, the number of control zones, the number of similar tests and other issues. Expect that the first time a test is performed it will take longer. Subsequent tests will take less time as the tester becomes more experienced and familiar with the test.

DRAFT

10.4.4 Sensor Calibration

A variety of sensors are used to control many facets of heating, ventilating, and air conditioning systems. Confirming that a sensor is measuring the respective parameter accurately is crucial to proper system operation and energy performance. For example, if a supply fan variable frequency drive is controlled based on duct static pressure, then it is imperative that the pressure sensor is measuring accurately. A precise definition of calibration is to perform a set of test procedures under specific conditions in order to establish a relationship between the value indicated by a measuring device and the corresponding values that would be realized by the standard being applied. The most common testing standards have been developed by the National Institute of Standards and Technology (NIST). However, the term "calibration" used in the acceptance tests simply refers to verification that the measured value from a sensor will correspond reasonably well (within 10% for pressure or light and within 2°F for temperature) to the actual state of the medium being measured.

The requirement found in a few test procedures for sensor calibration can be met by either having a calibration certificate provided with the sensor from the

manufacturer or through field verification. A calibration certificate from the manufacturer verifies that the particular sensor was tested per a traceable standard (typically NIST) and confirmed to be measuring accurately. A factory-calibrated sensor is assumed to be accurate and requires no further testing. Field verification generally requires checking the measured value from the sensor against a calibrated instrument while the sensor is installed in the system. Typically most sensors can be checked at a single operating point if the expected measurement range does not vary significantly. Any adjustments that are necessary to make the field-installed sensor correspond to the value measured by the calibrated instrument can be made at either the transmitter itself or within the control system database.

The following sensors are required to be checked for calibration.

- Pressure sensors used in variable flow applications (i.e. supply fan or pump variable frequency drive is controlled to maintain a specific pressure setpoint). This is applicable to test procedure(s): NJ9.1NA NA7.5.6 Supply Fan Variable Flow Controls; NJ10.4 Water-loop Heat Pump Controls; and NJ10.5 (Pump) Variable Frequency Drive ControlsNA NA7.5.9 Hydronic System Variable Flow Controls. Accuracy to 10%.
- Temperature sensors used to control field-installed economizers and supply water temperature reset. This is applicable to test procedure(s): NJ7.1NA NA7.5.4 Air Economizer Controls Acceptance; and NJ10.3NA NA7.5.8 Supply Water Temperature Reset Controls. Accuracy to 2°F.
- Carbon dioxide sensors used to implement a demand-controlled ventilation control strategycontrol outside air dampers. This is applicable to test procedure(s): NJ8.1NA NA7.5.5 Demand ControlDemand-controlled Ventilation Systems Acceptance. Accuracy to 75 PPM (parts per million) of CO_2 concentration.
- "System" Flow sensors only if used to control outside airoutdoor air dampers in variable air volume (VAV) systems. There are many different ways to control minimum ventilation in a VAV system, including (but not limited to):
  - Supply/return flow tracking
  - Direct outdoor air flow measurement
  - Constant differential pressure across dedicated ventilation air damper
  - Constant mixed air plenum pressure

The term "system" refers to whatever type of control strategy employed to actively control minimum ventilation air flow. This is applicable to test procedure(s): NA NA7.5.1.1 Variable Air Volume Systems Outdoor Air Acceptance. Overall, the "system" must be able to control flow to within the 10% of the design outdoor air ventilation value.

10.4.5 Air and Water Measurements

Balancing. It is recommended that before an occupancy permit is granted for a new building or space, or a new space-conditioning system serving a building or space is operated for normal use, the system should be balanced in accordance with the procedures defined by the Testing Adjusting and Balancing Bureau

(TABB) National Standards (2003); the National Environmental Balancing Bureau (NEBB) Procedural Standards (1983); or Associated Air Balance Council (AABC) National Standards (1989).

10.4.6 Factory Air-~~Side~~ Economizer Certification Procedure

When a manufacturer supplies an HVAC unit with a factory-installed economizer section certified to meet California Energy Commission economizer quality control requirements, the manufacturer shall be responsible for verifying that the unit meets the ~~following~~ acceptance requirements and providing a Compliance Certificate.

The manufacturer is also responsible for verifying that the high-limit switch on the economizer is set in compliance with Table 144-C of the Standard.

Equipment components shall be certified as passing the inspections or tests shown in Table 10-3.

Table 10-2~~3~~ – Certification of Air-~~Side~~ Economizer Components

Component	Factory Inspect and/or Test
Outdoor Air Temperature or Enthalpy Sensor ~~or Enthalpy~~	~~Enclosure~~ Unit mounted outdoor air temperature or enthalpy sensor is calibrated and properly shielded from direct sunlight.
Return Air Temperature or Enthalpy Sensor (if applicable)	Return air temperature or enthalpy sensor supplied with the unit for field-installation is calibrated.
High-Limit Switch	Test and verify high-limit switch showing compliance with Standards Table 144-C per §144(e)3.
Air-~~Side~~ Economizer Controller	Test and verify that economizer sequences in an integrated fashion per §144(e)2B and can modulate up to 100% ~~outside air~~outdoor air per §144(e)1A..

In addition to component certification, the ~~equipment shall pass the following operational tests~~economizer system shall be functionally tested as detailed in NA7.5.4.2.~~:~~

~~Step 1: Test the equipment under a simulated cooling load and verify the following:~~

- ~~Economizer damper modulates open per §144(e)1.A. to maximum position to satisfy cooling space temperature setpoint.~~
- ~~Return air damper modulates closed and is completely closed when economizer damper is 100% open.~~
- ~~Economizer damper is 100% open before mechanical cooling is enabled.~~
- ~~Relief fan, or return fan (if integral to the unit) is operating or barometric relief dampers (if integral to the unit) freely swing open.~~
- ~~Mechanical cooling is only enabled if cooling space temperature setpoint is not met with economizer at 100% open.~~

~~Step 2: Continue from Step 1 and disable the economizer using the high-limit switch. Verify and document the following:~~

- ~~Economizer damper closes to minimum position.~~
- ~~Return air damper opens to normal operating position.~~

DRAFT

- Relief fan, if applicable, shuts off or barometric relief dampers close. Return fan (if applicable) may still operate even when the economizer is disabled.
- Mechanical cooling remains enabled.

For units with economizers that are factory installed and certified operational by the manufacturer to California Energy Commission economizer quality control requirements, the in-field economizer acceptancefunctional test procedures test doesdo not have to be conducted. However, the Construction Inspection section of the Air Economizer Control acceptance test must be completed. A copy of the manufacturer's certification Compliance certificate Certificate must be attached to the MECH-45-A. All pre-test inspection procedures must be completed.

10.2Alternate Test Procedures for Hydronic System Controls Acceptance

It is important to make sure that control valves are selected to be able to shut off fully against the circulating pump pressure. Failure to do so wastes pump energy and may also cause systems to perform reheat (or recool) to make up for valve leakage. When the acceptance tests were first written, they included a provision that all valve actuators must be reviewed to ensure that they are sufficient to close off against the pump pressure. In a system with hundreds of control valves this is both impractical and costly. Alternate 2 of NJ.10.1 Variable Hydronic Flow Controls tests all of the valves in a hydronic system at the same time to demonstrate the control valve ability to shut off flow.

Alternate 1 of the NJ.10.5 (Pump) Variable Frequency Drive Controls Acceptance required measurement of the hydronic flow and drive power both at full load and 50% flow conditions. This was intended to demonstrate the provision of §144(j)6 that requires a variable speed drive or equivalent control that draws no more than 30% full load power at 50% flow. The purpose of this test in the Standards is to determine if a control other than a variable speed drive can meet or exceed the performance of a variable speed drive. If the pumps are controlled by variable speed drives their power and flow do not need to be measured as they generally meet the 30% power at 50% flow provision if the hydronic loop control pressure is kept constant or is reduced with reduced flow.. Measuring the control loop pressure at full and low flow in Alternate 2 of the NJ.10.5 (Pump) Variable Frequency Drive Controls Acceptance test validates that the VFD control is responding correctly.

- provides the following: name; company name; signature and date signed; as well as license number and expiration date

DRAFT

10.5 Lighting Acceptance Testing Overview

Acceptance requirements can effectively improve code compliance and help determine whether lighting equipment meets operational goals and whether it should be adjusted to increase efficiency and effectiveness.

10.5.1 Administration

§10-103(b)

The administrative requirements contained in the Standards require the lighting plans and specifications to contain:

- Completed acceptance testing forms for automatic daylighting controls, manual daylight switching, occupant sensing devices and automatic shut-off controls.
- Record drawings are provided to the building owners within 90 days of receiving a final occupancy permit, ,
- Operating and maintenance information be provided to the building owner, and
- Requirement for the issuance of installation certificates for daylighting controls, occupant sensing devices and automatic shut-off controls.

For example, the plans and specifications would require automatic shut-off lighting controls. A construction inspection would verify the device location and wiring is complete. Acceptance tests would verify proper zoning, on-off functions and overrides to assure the shut-off system is properly functioning. Owners' manuals and maintenance information would be prepared for delivery to the building owner. Finally, record drawing information, including programming information for the automatic shut-off lighting controls must be submitted to the building owner within 90 days of the issuance of a final occupancy permit.

10.5.2 Constructability Plan Review

DRAFT

Although acceptance testing does not require a plan review to be performed by the construction team, the construction team should review the construction drawings and specifications to understand the scope of the acceptance tests and raise critical issues that might affect the success of the acceptance tests prior to starting construction. Any constructability issues associated with the lighting system should be forwarded to the design team so that necessary modifications can be made prior to equipment procurement and installation. As an example, understanding the construction inspection requirements for manual or automatic daylighting controls (~~NJ6.3~~NA7.6.3 and ~~NJ6.1~~NA7.6.1) could prevent expensive rewiring if the circuiting requirements are understood prior to installing the wiring.

10.5.3 Field Process

Construction Inspection

"Do it right the first time." It is better to check that the wiring plan complies with the acceptance test requirements before installation. The alternative may result in the wiring not passing the construction acceptance test and rewiring.

Construction inspection should occur while wiring is installed. If changes have to be made to circuiting, it is better to do this while a lift is still on site or before obstructions are installed.

Key circuiting issues are:

- Wiring for multi-level control. Lamps, luminaires or rows of luminaires are regularly assigned to different circuits so that light levels can be increased uniformly by switching
- Lighting in the daylit zone has to be on separate circuits from other lighting and, in most cases, must also be wiring for multi-level control.

Construction inspection should also identify:

- Lighting control devices are properly located, calibrated and setpoints or schedules established,
- Documentation is available to identify settings and programs for each device.~~, and~~

Testing is to be performed on the following devices:

- Automatic daylighting controls
- Manual daylighting controls
- Occupancy sensing devices, and
- Automatic shut-off controls

10.5.4 Lighting Acceptance Test Issues

Acceptance testing must be tailored for each specific design, job site, and climactic conditions. While the steps for conducting each test remain consistent, the application of the tests to a particular site may vary. The following section discusses some of the known issues that occur when the acceptance tests are applied to a project.

DRAFT

General Issues

Internal control delays

Be aware of the potential for delays programmed into many control sequences. The purpose of delays is to prevent the system from controlling too rapidly and becoming unstable. With delays between five to 30 minutes, the acceptance testing can be prolonged considerably.

Initial conditions

Each test instructs the contractor to return the systems to normal operating condition based on the initial schedules, setpoints, and control parameters. These should be recorded prior to initiating the testing process.

Obtain correct control sequences before testing

It is essential to know exactly how the control sequences are programmed before testing begins. Otherwise, the contractor will not be able to customize the test to the particular systems or verify that the systems work as intended. Written control sequences often do not include enough detail to test the system against, or they are found to be incorrect. Testing based on incorrect sequences will not necessarily yield a valid result. In addition, to be successful, the contractor will need to know how to manipulate the control system.

~~Time to complete~~Estimated Time to Complete

To give the full picture to contractors, the At-a-Glance includes the time to complete construction observation as well as ~~equipment testing~~functional testing. In addition, the At-A-Glance indicates the time shown is per system (not per building).

10.6 Test Procedures for Envelope and Mechanical Systems

This section includes test and verification procedures for mechanical systems that require acceptance testing as listed below:

- Use the forms ENV-2A for documenting NA7.4.1 Fenestration Acceptance verification results

Use the form MECH-2-A -for documenting
~~NJ.3.1~~~~NA~~ NA7.5.1.1 Variable Air Volume Systems Outdoor Air Acceptance test results

~~NJ.3.2~~~~NA~~ NA7.5.1.2 Constant Volume Systems Outdoor Air Acceptance test results

Use the form MECH-3-A for documenting
~~NJ.4.1~~~~NA~~ NA7.5.2 Constant Volume, ~~Packaged HVAC~~Single-zone, Unitary Air Conditioner and Heat Pump Systems ~~Acceptance~~test results

~~Use the MECH-4-A for~~
~~NJ.7.1 Air-Side Economizer Acceptance~~

Use the form MECH-~~5~~4-A for documenting
~~NJ.5.1~~~~NA~~ NA7.5.3 Air Distribution Systems ~~Acceptance~~ test results

Use the form MECH-5-A for documenting
~~NA~~ NA7.5.4 Air Economizer Controls test results

Use the form MECH-6-A for documenting
~~NJ8.1~~~~NA~~ NA7.5.5 ~~Packaged Systems~~Demand- Controlled Ventilation (DCV) Systems~~Acceptance~~ test results

Use the form MECH-7-A for documenting

DRAFT

☐NJ9.1NA NA7.5.6 Supply Fan Variable Flow Controls test results

Use the form MECH-8-A for documenting

☐NJ10.1 Variable Flow Controls

☐NJ10.2 Automatic Isolation ControlsNA NA7.5.7 Valve Leakage Test results

Use the form MECH-9-A for documenting

☐NJ10.3NA NA7.5.8 Supply Water Temperature Reset Controls test results

☐NJ10.4 Water-loop Heat Pump Controls

Use the form MECH-10-A for

☐NJ10.5 Variable Frequency Drive ControlNA NA7.5.9 Hydronic System Variable Flow Controls test results

Use the form MECH-11-A for documenting

- NA7.5.10 Automatic Demand Shed Control test results

Use the form MECH-12-A for documenting

NA7.5.11 Fault Detection and Diagnostics for Packaged Units test results

Use the form MECH-13-A for documenting

NA7.5.12 FDD for Air Handling Units and Zone Terminal Units test results

Use the form MECH-14-A for documenting

NA7.5.13 Distributed Energy Storage DX AC Units test results

Use the form MECH-15-A for documenting

NA7.5.14 Thermal Energy Storage Units test results

… for AFDD, TES and DES/DXAC

The numbers preceding each test are keyed to the section of the Reference Nonresidential ACM Manual, Appendix NJ NA, where the required tests are is fully documented.

DRAFT

10.6.2 ~~NJ.3.1~~NA7.5.1.1 Ventilation Systems: Variable Air and Constant Volume Systems ~~Outdoor Air Acceptance~~

At-a-Glance

~~NJ.3.1~~NA7.5.1.1 ~~Variable Air Volume Systems Outdoor Air Acceptance~~ Ventilation Systems: Variable Air Systems

Use Form MECH-2-A

Purpose of the Test

This test ensures that adequate ~~outside air~~outdoor air ventilation is provided through the variable air volume air handling unit ~~under all~~at two representative operating conditions. The test consists of measuring ~~outside air~~outdoor air ~~valves~~ values at maximum flow and at or near minimum flow. The test verifies that the minimum volume of ~~outside air~~outdoor air, as required per §121(b)2, is introduced to the air handling unit when the system is in occupied mode at ~~any~~ these two conditions of supply airflow. Note that this test should be performed in conjunction with ~~NJ.9.1~~NA7.5.6 Supply Fan Variable Flow Controls Acceptance test procedures to reduce the overall system testing time as both tests use the same two conditions of airflow for their measurements. Related acceptance tests for these systems include the following:

~~□NJ.7.1~~NA7.5.4 ~~(Air-Side) Economizer Acceptance (if applicable)~~Air Economizer Controls

~~□NJ.8.1~~NA7.5.5 ~~Demand Control~~Demand-~~c~~Controlled Ventilation Systems Acceptance (if applicable)

~~NJ.9.1~~NA7.5.6 Supply Fan Variable Flow Controls Acceptance

DRAFT

Instrumentation

Performance of this test will require measuring ~~outside air~~outdoor ~~flow~~air flow. The instrumentation needed to perform the task may include, but is not limited to:

~~□A means to measure airflow~~An airflow measurement probe (e.g. ~~typically either a velocity pressure probe, or hot wire anemometer~~hot-wire anemometer or velocity pressure probe~~, duct traverse, temperature-split method~~)~~.~~, or

~~□~~If the system was installed with an airflow monitoring station (AFMS) on the ~~outside air~~outdoor air, it can be used for the measurements if it has a calibration certificate or is field calibrated.

Test Conditions
To perform the test, it will be necessary to override the normal operation of the controls. The control system of the air handling unit and ~~variable air volume (VAV) boxes~~zone controls must be complete, including: Supply fan capacity control (typically a variable speed drive) Air~~-Side~~ Economizer control Minimum ~~outside air~~outdoor air damper control ~~VAV box~~Zone airflow control (including zone thermostats and ~~box minimum/maximum flow settings~~VAV boxes~~s~~) All systems must be installed and ready for system operation, including: Duct work VAV boxes Control sensors (temperature, flow, pressure, etc.) Electrical power to air handling unit and control system components Completion of air handling unit start-up procedures, per manufacturer's recommendations Document the initial conditions before executing system overrides or manipulation of the setpoints and schedules. All systems must be returned to normal at the end of the test.
Estimated Time to Complete
Construction inspection: 0.5 hours ~~(review of flow station with calibration certificate)~~ to 2 hours (~~to test calibration of a damper with a calibrated flow curve~~depending on complexity and difficulty in calibrating the "system" controlling outdoor air flow) ~~**Equipment testing**~~**Functional testing**: 1 to 3 hours (depending on the type of zone control and the number of zones)

DRAFT

Acceptance Criteria
System controlling outdoor air flow was calibrated in the field or at the factory ~~Outside airflow station is calibrated (if applicable)~~ ~~Calibration curve of outside air vs. outside air damper position, inlet vane signal, or VFD signal was completed during system TAB procedures.~~ Measured ~~outside air~~outdoor ~~flow~~air-flow reading is within ~~no less than 90~~10% of the total value found on the Standards ~~requirement found on~~ Mechanical Plan Check document MECH-3-C~~C-05 at~~, Column I under the following conditions: ~~□~~Minimum system airflow or 30% of total design flow~~, whichever is greater~~ ~~□~~Design supply airflow ~~□If a dedicated minimum ventilation fan exists, the measured CFM delivered regardless of the speed of the supply fan is within 10% of the total value found on the Standards Mechanical Plan Check document MECH-3-C, Column I10% of design minimum outside air found on Mechanical Plan Check document MECH-3-C column I. Note that this design minimum outside air ventilation rate can be significantly greater than the calculated minimum outside air to account for building pressurization issues, special requirements of the space or the preferences of the owner.~~
Potential Issues and Cautions
Use caution when performing test during winter months in cold climates. Since ~~outside air~~outdoor airflow must remain constant as supply fan flow is reduced, total supply flow can approach 100% ~~outside air~~outdoor air. Be sure that all freeze protection and heating coil controls are functioning before performing test. Coordinate test procedures with the controls contractor since they may be needed to assist with manipulation of the BAS to achieve the desired operating conditions. Ensure economizer and demand- C~~c~~ontrolled ventilation controls are~~is~~ disabled before performing the test.

DRAFT

10.6.3 Test Procedure: ~~NJ.3.1~~NA7.5.1.1 Ventilation Systems: Variable Air Volume Systems ~~Outdoor Air Acceptance~~, Use MECH-2-A

Construction Inspection

~~The system was designed to dynamically maintain the minimum OSA throughout the full range of supply airflow.~~

~~If an outside airflow station is part of the system, it is calibrated~~

~~If the system relies on a calibrated damper, there is a calibration curve of outside air vs. outside air damper position, inlet vane signal, or VFD signal that is documented in the TAB report.~~

The ~~Acceptance Agent~~ Acceptance Agent should review the sequences of operation to ensure that the system has been designed for dynamic control of minimum outdoor air and review the installation to make sure that all of the devices that are part of that sequence are indeed installed.

There are a number of means to dynamically control minimum OSA. A survey of common methods are presented in Chapter 4 of the Nonresidential ~~User's~~Compliance Manual. After validating that the sequence of control will dynamically control outdoor air check the "System is designed to dynamically control minimum OSA" box in the "Construction Inspection" section of MECH-2-A.

There are many ways for the designer to specify an active ventilation air control "system" intended to maintain a constant outdoor air flow rate as supply fan flow rate decreases. For example, a flow station may be installed to measure outdoor air flow rate and modulate the outdoor air dampers accordingly. Or perhaps dampers are modulated to maintain a constant differential pressure across a dedicated outdoor air damper assembly. Regardless of how the outdoor air flow is to be controlled, the sensors, equipment, and control strategy necessary to achieve the desired control must be calibrated as a "system".

Regardless of the method used, the "system" controlling outdoor air flow must be calibrated either at the factory or in the field. Attach the calibration certificate or field calibration results to the acceptance test form and check the calibration certificate box under the "Construction Inspection" section of MECH-2-A.

~~Checkout Procedure if the System Has a Flow Station Installed~~

~~If the manufacturer provides a calibration certificate specifically for the flow station, this is acceptable. Note this includes traditional airflow monitoring stations with an array of pitot tubes or hot-wire anemometers and other calibrated systems to measure flow. There are several manufactured products that correlate flow to a damper's position using a corresponding pressure measurement. If the calibration certificate indicates that the damper has been calibrated across its intended range of operation, this is sufficient. Attach the calibration certificate to the acceptance test form and check the "Calibration certificate" box in the "Construction Inspection" section of MECH-2-A.~~

~~If the manufacturer does not provide a calibration certificate specifically for the flow station, then the flow station must be calibrated in the field with the calibration documented to the satisfaction of the acceptance testing agent. Methods for field calibration of airflow monitoring stations include:~~

1. ~~Traverse across the outside air duct to measure duct velocity, measure duct size, and calculate flow.~~
2. ~~Measure face velocity at various points across outside air intake, measure intake damper size, and calculate flow.~~
3. ~~Traverse across the supply and return ducts to calculate flow (outside airflow can be estimated as the difference between the supply and return flow rates).~~
4. ~~Measure differential pressure across flow station at test ports and use manufacturer's *pressure vs. flow* curve to determine airflow (least desirable since not actually measuring flow).~~

~~After calibrating the flow station to within 10% of measured flow, check the "Field calibration" box in the "Construction Inspection" section of MECH-2-A.~~

DRAFT

~~Checkout Procedure if the System Does Not Have a Flow Station Installed~~

~~If the system does not use an airflow monitoring station to directly measure airflow, the Acceptance Agent should review the sequences of operation to ensure that the system has been designed for dynamic control of minimum outdoor air and review the installation to make sure that all of the devices that are part of that sequence are indeed installed.~~

~~There are a number of means to dynamically control minimum OSA. A survey of common methods are presented in Chapter 4 of the Non-Residential User's Manual. After validating that the sequence of control will dynamically control outside air check the "System is designed to dynamically control minimum OSA" box in the "Construction Inspection" section of MECH-2-A.~~

~~Equipment Testing~~Functional Testing

Step 1: Disable the air~~-side~~ economizer, if applicable. For systems with an air~~-side~~ economizer, disabling the economizer will prevent the ~~outside air~~outdoor air damper from modulating during the test due to atmospheric conditions rather than supply airflow variations. Disabling the economizer is necessary only if the system is in cooling mode and ~~outside~~ outdoor air temperature is below the economizer high limit setpoint. The economizer can be disabled in a number of ways depending on the control strategy used to modulate the ~~outside air~~outdoor air dampers:

- Use the high limit switch by reducing the setpoint (return air value or ~~outside~~ outdoor air value if a comparative or changeover strategy, respectively, is used) below the current OSA dry-bulb or enthalpy measurement

- Disable the economizer damper control loop through software if it is a DDC system.

DRAFT

Step 2: Modify VAV boxes to achieve design airflow. The intent is to measure outdoor air flow when the system is operating at or near the design airflow condition. This point is provided along with the minimum operating point to test the minimum OSA control at either end of its control range. There are a number of ways to achieve design airflow including:

Override all space temperature cooling setpoints to a low temperature (e.g. 60°F cooling) that will force the VAV boxes into full cooling (may be accomplished by a global command or it may have to be done per individual box).

Command all VAV boxes to design flow position (may be accomplished by a global command or it may have to be done per individual box).

Set the VAV box minimum flow setpoint to be the same as maximum flow setpoint (may be accomplished by a global command or it may have to be done per individual box).

Verify and Document

Measured outdoor air flow is within 10% of design outdoor air flow rate found on Mechanical Plan Check document MECH-3-C column I. Outdoor air flow can be measured directly, or indirectly, in a variety of ways. Acceptable methods for measuring outdoor air flow include, but are not limited to the following techniques:

1. Read the outdoor air flow value measured by an air flow monitoring station if one is installed.
2. Traverse across the outdoor air duct to measure duct velocity, measure duct size, and calculate flow.
3. Measure face velocity at various points across outdoor air intake, measure intake damper size, and calculate flow.
4. Traverse across the supply and return ducts to calculate flow (outdoor airflow can be estimated as the difference between the supply and return airflow rates).

System operation stabilizes within 5 minutes. The intent is to ensure the PID control loops are tuned properly so that the system does not hunt.

~~**Step 2: Disable the demand control**~~**demand-controlled** ~~**ventilation, if applicable.** For systems with demand control~~demand-controlled ~~ventilation, this control must be disabled during the test of the minimum OSA control as it may interfere with the setpoint for the minimum OSA control. On a multiple zone system, the demand control~~demand-controlled ~~ventilation will almost assuredly be provided using a DDC control package. Using the DDC software, the reset signal to the minimum OSA control loop can be set to a fixed point equal to the design minimum OSA at full occupancy.~~

Step 3: Drive all VAV boxes to ~~the greater of~~ either the minimum airflow or 30% of total design airflow. The intent is to measure ~~outside air~~outdoor ~~flow~~air flow when the system is operating at or near a minimum flow condition. This point is provided along with the design point to test the minimum OSA control at either end of its control range. If the system has an airflow monitoring station (AFMS) it will test the accuracy of that AFMS at the lowest velocity, its least accurate point. There are a variety of ways to force the VAV boxes to a minimum position depending on the building automation system capabilities and control strategies used, for example:

- Override all space temperature setpoints to a wide range (e.g. 60°F heating and 90°F cooling) that will force the VAV boxes into the deadband (may be accomplished by a global command or it may have to be done per individual box).

- Command all VAV boxes to minimum flow position (may be accomplished by a global command or it may have to be done per individual box).

- Set maximum flow setpoint to be the same as minimum flow setpoint (may be accomplished by a global command or it may have to be done per individual box).

•

In all three cases, you must release or restore the zone or box controls to their pretest settings after the test is complete.

An alternative method is to manually adjust the VFD until the system airflow is at the desired condition. If the VAV boxes are in control they will open up as you are doing this, so you need to provide some time (about 5 minutes) to allow the system to settle. Be warned that although this is acceptable for testing OSA, this would not meet the requirements of test NJ.9.1NA7.5.6 Supply Fan Variable Flow Controls Acceptance for testing the stability of the pressure control loop. These two tests should be done concurrently to minimize cost.

Verify and Document

Measured outside airoutdoor flowair flow is within 10% of design outside airoutdoor air flowrateflow rate found on Mechanical Plan Check document MECH-3-C column I. Outdoor air flow can be measured directly, or indirectly, in a variety of ways. Acceptable methods for measuring outside airoutdoor flowair flow include, but are not limited to the following techniques. The recommendations provided earlier for field airflow measurement methods apply here:.

1. Read the outside airoutdoor flowair flow value measured by an airflowair flow monitoring station if one is installed.
2. Traverse across the outside airoutdoor air duct to measure duct velocity, measure duct size, and calculate flow.
3. Measure face velocity at various points across outside airoutdoor air intake, measure intake damper size, and calculate flow.
4. Traverse across the supply and return ducts to calculate flow (outside airoutdoor flowairflow can be estimated as the difference between the supply and return flow rateairflow rates).

System operation stabilizes within 15 5 minutes. The intent is to ensure the PID control loops are tuned properly so that the system does not hunt.

Step 4: Drive all VAV boxes to achieve design airflow. The intent is to measure outside airoutdoor flowairflow when the system is operating at or near full design flow condition. This typically occurs when all of the VAV boxes are operating at maximum cooling flow rateair flow rate. There are a variety of ways to force the VAV boxes to a maximum cooling position depending on the building automation system capabilities and control strategies used, for example:

- Override all space temperature setpoints to be below current space conditions to force the VAV box into maximum cooling (may be accomplished by a global command or it may have to be done per individual box).

- Command all VAV boxes to maximum flow position (may be accomplished by a global command or it may have to be done per individual box).

DRAFT

~~In either case, you must release or restore the zone or box controls to their pretest settings after the test is complete.~~

~~Again, we do not recommend simply forcing the supply fan VFD to a maximum speed since building pressure/return fan/exhaust damper control strategies may adversely impact overall system and outside air~~outdoor ~~flow~~air ~~rate~~flow rates~~. It is much better to allow the system to react as intended under "normal" operating conditions.~~

Verify and Document

Measured ~~outside air~~outdoor ~~flow~~air flow is within 10% of design ~~outside air~~outdoor air flow rate found on Mechanical Plan Check document MECH-3-C column I. ~~Acceptable methods for measuring outside airflow include, but are not limited to the following techniques.~~ The ~~recommendations~~ methodologies provided earlier for conducting field airflow measurements ~~methods~~ also apply here.

~~1. Read the airflow value measured by the flow station.~~

~~2. Traverse across the outside air duct to measure duct velocity, measure duct size, and calculate flow.~~

~~3. Measure face velocity at various points across outside air intake, measure intake damper size, and calculate flow.~~

~~4. Traverse across the supply and return ducts to calculate flow (outside airflow can be estimated as the difference between the supply and return flow rates).~~

System operation stabilizes within ~~15~~ 5 minutes. The intent is to ensure the PID control loops are tuned properly so that the system does not hunt.

Step ~~5~~4: Return system back to normal operating condition. Ensure all schedules, setpoints, operating conditions, and control parameters are placed back at their initial conditions. Release any overrides on the economizer or demand ventilation controls.

DRAFT

Exception to ~~Equipment Testing~~Functional Testing Procedures

Air handling systems that have a dedicated fan providing ventilation air to the unit would be exempt from measuring ventilation airflow at minimum and maximum supply airflow conditions. An independent ventilation air fan will deliver a constant minimum ~~outside air~~outdoor air volume to the air handling unit regardless of the speed of the supply fan. Therefore, the only verification needed for this system type would be to measure the actual CFM delivered by the dedicated ventilation air fan.

Verify and Document

Measured ~~outside air~~outdoor ~~flow~~air flow is within 10% of design ~~outside air~~outdoor air flow rate found on Mechanical Plan Check document MECH-3-C column I. The methodologies provided earlier for conducting field airflow measurements also apply here.~~Acceptable methods for measuring outside airflow include, but are not limited to:~~

~~Read the airflow value measured by the flow station.~~

- ~~Traverse across the outside air duct to measure duct velocity, measure duct size, and calculate flow.~~

- ~~Measure face velocity at various points across outside air intake, measure intake damper size, and calculate flow.~~

- ~~Traverse across the supply and return ducts to calculate flow (outside airflow can be estimated as the difference between the supply and return flow rates)~~

~~1..1~~10.6.4 NA7.5.1.2 Constant Volume Systems Outdoor Air Acceptance

At-a-Glance

~~NJ.3.2~~NA7.5.1.2 Constant Volume Systems Outdoor Air Acceptance Use Form MECH-2~~-~~A
Purpose of the Test
The purpose of the test is to ensure that adequate ~~outside air~~outdoor air ventilation is provided through the constant volume air handling unit to the spaces served under all operating conditions. The intent of the test is to verify that the minimum volume of ~~outside air~~outdoor air, as required per §121(b)2, is introduced to the air handling unit during typical space occupancy. Note that systems requiring demand ventilation controls per §121(c)3 must conform to §121(c)4~~.~~E regarding the minimum ventilation rate when the system is in occupied mode. Related acceptance tests for these systems include the following: ~~NJ.4.1~~NA7.5.2 Constant~~V-v~~Volume, Single-zone, Unitary Air Conditioners and Heat Pump Systems ~~Packaged HVAC Systems Acceptance~~ ~~NJ.7.1~~NA7.5.4 ~~(Air-Side)~~Air Economizer ~~Acceptance~~ Controls (if applicable) ~~NJ.8.1~~NA7.5.5 ~~Demand Control~~Demand- C~~c~~ontrolled Ventilation Systems Acceptance (if applicable)
Instrumentation
Performance of this test will require measuring ~~outside air~~outdoor ~~flow~~air flow. The instrumentation needed to perform the task may include, but is not limited to: ~~-~~A means to measure airflow (typically either a velocity pressure probe or hot wire anemometer) ~~-~~If the system was installed with an airflow monitoring station (AFMS) on the ~~outside air~~outdoor air it can be used for the measurements if it has a calibration certificate or is field calibrated.

DRAFT

Test Conditions
To perform the test, it may be necessary to override the control system of the air handling unit. The control system of the air handling unit must be complete. **All systems must be installed and ready for system operation, including**: Air-~~side~~ economizer controls ~~-~~Duct work ~~-~~Control sensors (temperature, flow, thermostats, etc.) ~~-~~Electrical power to air handling unit and control system components~~unit~~ ~~-~~Completion of air handling unit start-up procedures, per manufacturer's recommendations ~~-~~Document the initial conditions before overrides or manipulation of the setpoints and schedules. All systems must be returned to normal at the end of the test. Note: Systems requiring demand ventilation controls per §121(c)3 must conform to §121(c)4~~.~~E regarding the minimum ventilation rate (refer to ~~NJ.8.1~~NA7.5.5 ~~Demand Control~~Demand-~~C~~controlled Ventilation Systems Acceptance Test).
Estimated Time to Complete
Construction inspection: 0.5 hours ~~**Equipment testing**~~**Functional testing**: 1 hour (depending on difficulty in measuring outdoor air flow)
Acceptance Criteria
System has a ~~fixed or motorized minimum outdoor air damper, or economizer, capable~~means of maintaining the~~a~~ minimum outdoor air damper position. Minimum damper position is marked on the outdoor air damper Measured ~~outside air~~outdoor ~~flow~~air flow is within 10% of ~~design outside air flowrate~~the total value ~~-~~found on the Standards Mechanical Plan Check document MECH-3-C column I. ~~Note that this design minimum outside air ventilation rate can be significantly greater than the calculated minimum outside air to account for building pressurization issues, special requirements of the space or the preferences of the owner.~~
Potential Issues and Cautions
Do not attempt to set the minimum damper position and perform the acceptance test at the same time. The acceptance test verifies the outdoor airflow of the system after calibration and system set-up is complete. Testing costs can be reduced by conducting the acceptance test immediately after set-up is concluded.

DRAFT

~~1..2~~10.6.5 Test Procedure: ~~NJ.3.2~~NA7.5.1.2 Constant Volume Systems Outdoor Air Acceptance, Use Form MECH-2-A

Construction Inspection

System has a ~~fixed or motorized minimum outdoor air damper, or economizer, capable~~means of maintaining a minimum outdoor air damper position.

- Packaged HVAC systems without an economizer will most likely have a fixed ~~outside air~~outdoor air damper that can be adjusted manually.

- Small packaged HVAC systems (< 20 tons) with an economizer will most likely have a controller/actuator that will control the outside and return air dampers (for example, a Honeywell W7459A economizer control package). The economizer control package is responsible for maintaining a minimum ventilation damper position as necessary and will most likely receive operation signals from either a thermostat or through a connection to a central DDC system.

- Large packaged HVAC systems (> 20 tons) will most likely have either a stand-alone economizer controller/actuator package (for example, a Honeywell W7459A) or a control package similar to a built-up system (i.e. outside and return air dampers controlled by a DDC signal). The stand-alone economizer package may receive operation signals from a thermostat, an internal DDC controller, or a central DDC system. The "built-up" style economizer will most likely be controlled by an internal DDC controller or a central DDC system. Some large package systems may also have a dedicated ~~outside air~~outdoor air damper/actuator, independent of the economizer control strategy.

- Built-up HVAC system can control the outside and return dampers through a single actuator and damper linkages or through independent actuators and control signals. The control signals will most likely come from a central DDC system. Some built-up systems may also have a dedicated ~~outside air~~outdoor air damper/actuator, independent of the economizer control strategy.

Minimum position is marked on the outdoor air damper. The intent is that if the damper position is moved for any reason, it can be returned to the proper position to maintain design minimum outdoor air flow requirements.

~~Equipment Testing~~Functional Testing

Step 1: Disable the air~~-side~~ economizer, if applicable. For systems with an air~~-side~~ economizer, disabling the economizer will prevent the ~~outside air~~outdoor air damper from modulating during the test due to atmospheric conditions rather than supply airflow variations. Disabling the economizer is necessary only if the system is in cooling mode and ~~outside air~~outdoor air temperature is below the economizer high limit setpoint. The economizer can be disabled in a number of ways depending on the control strategy used to modulate the ~~outside air~~outdoor air dampers:

- Use the high-limit switch by reducing the setpoint (return air value or ~~outside air~~outdoor air value if a comparative or changeover strategy, respectively, is used) below the current OSA dry-bulb or enthalpy measurement

- Disable the economizer damper control loop through software if it is a DDC system.

DRAFT

~~**Step 2: Disable the demand controldemand-controlled ventilation, if applicable.** For systems with demand controldemand-controlled ventilation, this control must be disabled during the test of the minimum OSA control as it may interfere with the setpoint for the minimum OSA control. On a multiple zone system, the demand controldemand-controlled ventilation will almost assuredly be provided using a DDC control package. Using the DDC software, the reset signal to the minimum OSA control loop can be set to a fixed point equal to the design minimum OSA at full occupancy.~~

Verify and Document

Measured outdoor air flow is within 10% of design outdoor air flow rate found on Mechanical Plan Check document MECH-3-C column I. Outdoor air flow can be measured directly, or indirectly, in a variety of ways. Acceptable methods for measuring outdoor air flow include, but are not limited to the following techniques:

1. Read the outdoor air flow value measured by an air flow monitoring station if one is installed.
2. Traverse across the outdoor air duct to measure duct velocity, measure duct size, and calculate flow.
3. Measure face velocity at various points across outdoor air intake, measure intake damper size, and calculate flow.
4. Traverse across the supply and return ducts to calculate flow (outdoor airflow can be estimated as the difference between the supply and return airflow rates).

~~Measured outside airflow is within 10% of design outside air flowrate found on Mechanical Plan Check document MECH-3-C column I. Acceptable methods for measuring outside airflow include, but are not limited to, the following techniques. The recommendations provided earlier for field airflow measurement methods apply here.~~

- ~~Traverse across the outside air duct to measure duct velocity, measure duct size, and calculate flow.~~
- ~~Measure face velocity at various points across outside air intake, measure intake damper size, and calculate flow.~~
- ~~Traverse across the supply and return ducts to calculate flow (outside airflow can be estimated as the difference between the supply and return flow rates).~~

DRAFT

Step ~~3~~2: Return system back to normal operating condition. Ensure all schedules, setpoints, operating conditions, and control parameters are placed back at their initial conditions. Release any overrides on the economizer or demand ventilation controls.

1..310.6.6 NA7.5.2 Constant Volume, Packaged HVACSingle-zone, Unitary Air Conditioner and Heat Pumps Systems Acceptance

At-a-Glance

NJ.4.1NA7.5.2 Constant Volume Packaged HVAC, Single-zone, Unitary Air Conditioner and Heat Pumps Systems Acceptance Use Form MECH-3 A
Purpose of the Test
The purpose of the test is to verify the individual components of a constant volume packaged HVAC , single-zone, unitary air conditioner and heat pump system function correctly, including: thermostat installation and programming, and supply fan, heating, cooling, and damper operation. Testing of the economizer, outdoor air ventilation, and demand controldemand-controlled ventilation are located in the following sections: NJ.3.2NA7.5.1.2 Constant Volume System Outdoor Air Acceptance NJ.7.1NA7.5.4 (Air-Side)Air Economizer Controls Acceptance (if applicable) NJ.8.1NA7.5.5 Demand Control Demand- Ceontrolled Ventilation Systems Acceptance. (if applicable)
Instrumentation
None required
Test Conditions
Packaged uUnit and thermostat installation and programming must be complete. HVAC system must be installed and ready for system operation, including completion of all start-up procedures, per manufacturer's recommendations. Document the initial conditions before overrides or manipulation of the setpoints and schedules. All systems must be returned to normal at the end of the test.
Time to CompleteEstimated Time to Complete
Construction inspection: 0.5 to 1 hour (depending on familiarity with thermostat programming) **Equipment test**: 1 to 2 hours
Acceptance Criteria
Thermostat is located within the space-conditioning zone that is served by the respective HVAC system The tThermostat is wired to the unit correctly (note this can be inferred from the acceptance tests).meets the temperature adjustment and dead band requirements of Standards Section 122(b). The heating and cooling setpoints and schedules have been programmed into a thermostat or central DDC system. The heating and cooling setpoints can be adjusted to least 5°F apart.Occupied, unoccupied, and holiday schedules have been programmed per the facility's schedule Pre-occupancy purge has been programmed to meet the requirements of Standards Section 121(c)2.

Acceptance Criteria
The following modes of operation function correctly: **Occupied heating mode operation**: The supply fan operates continuously, all heating stages operate, cooling is not enabled, and the outdoor air damper is at minimum position. **Occupied operation with no heating or cooling load**: The supply fan operates continuously, heating or cooling are not enabled, and the outdoor air damper is at minimum position. **Occupied cooling mode operation without economizer**: The supply fan operates continuously, all cooling stages operate, heating is not enabled, and outside damper is at minimum position. **Unoccupied operation with no heating or cooling load**: The supply fan shuts off, heating or cooling are not enabled, and the outdoor air damper is closed. **Unoccupied operation with heating load**: The supply cycles ON, heating is enabled, cooling is not enabled, and the outdoor air damper is either closed or at minimum position. **Unoccupied cooling mode operation without economizer**: The supply cycles ON, cooling is enabled, heating is not enabled, and the outdoor air damper is either closed or at minimum position. **Override mode**: System reverts to occupied mode, the supply fan turns ON for duration of override, heating or cooling is enabled as necessary, outdoor air damper opens to minimum position.
Potential Issues and Cautions
Ensure that the supply fan runs continuously in occupied mode and cycles appropriately in unoccupied mode. Cycling refers to the supply fan running only when heating or cooling is enabled. When testing the manual override, it may be necessary to adjust the length of the override period to minimize test time. Be sure to reset the override period back to the correct length of time. Overall test time may be reduced (especially for rooftop HVAC units controlled by thermostats) if two people perform the test - one to manipulate the thermostat while someone else verifies operation at the packaged unit. The Standards do not mandate the actual differential between occupied and unoccupied setpoints, only that the system must be adjustable down to 55°F for heating and up to 85°F for cooling and that the thermostat can be set for a 5°F deadband. Setback control is only required for climates where the winter median of extremes is less than or equal to 32°F. Setup control is only required for climates where the 0.5% summer design dry-bulb temperature is greater than or equal to 100°F.

DRAFT

~~1..~~410.6.7 Test Procedure: ~~NJ.4.1~~NA7.5.2 Constant Volume ~~Packaged HVAC~~, Single-zone, Unitary Air Conditioner and Heat Pumps Systems Acceptance, Use Form MECH-3~~-~~A

Test Comments

The following acceptance test procedures are applicable to systems controlled by individual thermostats, internal DDC, or central DDC systems. Most of the tests can be performed through simple manipulation of the individual thermostat or the DDC system controlling each packaged HVAC unit. Specific details and examples of how to perform each test are provided below.

Construction Inspection

Thermostat, or temperature sensor, is located within the zone that the respective HVAC system serves.

Thermostat is wired to the unit correctly. Note that this can be inferred from the acceptance tests.

1. In particular, ensure that multiple stage terminals (i.e., 1st and 2nd stage wires) on the thermostat, both cooling and heating stages, are wired to the corresponding circuits at the unit.

2. Verify that no factory-installed or field-installed jumpers exist across the 1st and 2nd stage cooling terminals at the unit (this will ensure that only the economizer can be enabled as the 1st stage of cooling).

3. For heat pump only, verify the "O" terminal on the thermostat is wired to the reversing valve at the unit.

4. For heat pump only, verify thermostat dip switch or programmable software is set to heat pump.

Thermostat ~~is capable of achieving a 5°F deadband between heating and cooling setpoints~~meets the temperature adjustment and dead band requirements of Standards Section 122(b).

~~Setup and setback (unoccupied) setpoints have been enabled (if required).~~

Occupied, unoccupied, and holiday schedules have been programmed~~.~~ ~~Schedules are programmed into an individual thermostat or central DDC system. Note that some thermostat brands require that the thermostat be in the "program" mode of operation in order for time schedules to be enabled.~~ per the facility's schedule

Pre-occupancy purge has been programmed to meet the requirements of Standards Section ~~per~~ §121(c)2. This is most easily accomplished by scheduling the unit to start one hour prior to actual occupancy.

~~Equipment Testing~~Functional Testing

The following procedures are applicable to systems controlled by a programmable thermostat, internal DDC (packaged systems only), or central DDC system.

Step 1: Disable economizer control and demand-controlled ventilation systems (if applicable) to prevent unexpected interactions.

The economizer can be disabled by setting the high-limit setpoint at its maximum value and the demand-controlled ventilation system can be disabled by setting CO_2 setpoint well below current zone CO_2 concentration.

Step ~~1~~2: Simulate a heating ~~load~~ demand during occupied condition. (Mode ~~A~~ #A on MECH-3~~-~~A form).

☐Set "occupied" time schedule to include actual time or adjust time to be within the "occupied" time schedule (which ever is easier).

☐Set heating setpoint above actual space temperature.

Verify and Document

☐Supply fan operates continually during occupied condition.

☐Ensure all available heating stages operate. This may require raising the heating setpoint even further so that multiple heating stages can become enabled. For example, many programmable thermostats and DDC control algorithms use time delays and deviation from setpoint to enable multiple heating stages. Setting the heating setpoint very high should prevent the 1st stage of heat from meeting setpoint and allow the system adequate time to enable the 2nd or 3rd stages.

☐No c~~C~~ooling is ~~not enabled~~provided by the unit.

☐~~Outside air~~Outdoor air damper is open to minimum ventilation position (Note: Outdoor ventilation air requirements will be tested under section ~~NJ.3.2~~NA7.5.1.2 **Constant Volume System Outdoor Air Acceptance**).

Step ~~2~~3: Simulate operation in the dead band ~~operation~~ during occupied condition.
(Mode #B~~B~~ on MECH-3~~-~~A form)

☐Set "occupied" time schedule to include actual time or adjust time to be within the "occupied" time schedule (which ever is easier).

☐Adjust heating and cooling setpoints so that actual space temperature is between the two values.

Verify and Document

☐Supply fan operates continually during occupied condition.

☐Neither h~~H~~eating nor cooling ~~should not be enabled~~is provided by the unit.

☐~~Outside air~~Outdoor air damper is open to minimum ventilation position.

DRAFT

Step ~~3~~4: ~~For systems without an economizer, s~~Simulate a cooling ~~load~~ demand during occupied condition. (Mode #C on MECH-3-A form) ~~Mode F~~

☐Set "occupied" time schedule to include actual time or adjust time to be within the "occupied" time schedule (which ever is easier).

☐Set cooling setpoint below actual space temperature.

Verify and Document

☐Supply fan operates continually during occupied condition.

☐Ensure all available cooling stages operate. This may require lowering the cooling setpoint even further so that multiple cooling stages can become enabled. For example, many programmable thermostats and DDC control algorithms use time delays and deviation from setpoint to enable multiple cooling stages. Setting the cooling setpoint very low should prevent the 1st stage of cooling from meeting setpoint and allow the system adequate time to enable the 2nd stage.

☐No h~~H~~eating is ~~not enabled~~provided by the unit.

☐~~Outside air~~Outdoor air damper is open to minimum ventilation position.

Step ~~4~~5: Simulate operation in the dead band ~~operation~~ during unoccupied condition.
(Mode #D on MECH-3-A form) ~~Mode D~~

☐Set "unoccupied" time schedule to include actual time or adjust time to be within the "unoccupied" time schedule (which ever is easier).

☐Ensure actual space temperature is in between unoccupied heating and cooling setpoints. Adjust each setpoint as necessary to achieve desired control.

Verify and Document

☐Supply fan shuts OFF during unoccupied condition.

☐Neither heating nor cooling is ~~enabled~~provided by the unit.

☐~~Outside air~~Outdoor air damper is ~~completely shut~~fully closed.

Step ~~5~~6: Simulate heating ~~load~~ demand during unoccupied condition. (Mode #E on MECH-3-A form)

~~**Mode C** Note: This test is only applicable for all systems in a climate where the design winter median of extremes is less than or equal to 32°F(that are not exempt by §122(e)2.A).~~

☐Set "unoccupied" time schedule to include actual time or adjust time to be within the "unoccupied" time schedule (which ever is easier).

☐Set heating setpoint above actual space temperature.

DRAFT

Verify and Document

☐Supply fan cycles on with call for heating.

☐Heating is ~~enabled~~provided by the unit.

☐No c~~C~~ooling is ~~not enabled~~provided by the unit.

Outdoor air damper is either fully closed or at minimum position

Step ~~6~~7: ~~For systems without an economizer, s~~Simulate cooling ~~load demand~~ during unoccupied condition.~~—~~ (Mode #F on MECH-3-A form)

~~Mode G Note: systems with an economizer will be tested for proper system operation under a cooling load in section NJ.7.1 Economizer Acceptance. This test is only applicable for those systems in a climate where the 0.5% summer design dry-bulb temperature is greater than or equal to 100°F (other systems are exempted by §122(e)2.B).~~

☐Set "unoccupied" time schedule to include actual time or adjust time to be within the "unoccupied" time schedule (which ever is easier).

☐Set cooling setpoint above actual space temperature.

Verify and Document

☐Supply fan cycles on with call for cooling.

☐No h~~H~~eating is ~~not enabled~~provided by the unit.

☐Cooling is ~~enabled~~provided by the unit.

☐~~Outside air~~Outdoor air damper is either fully closed or at minimum position.

DRAFT

Step ~~7~~8: Simulate manual override during unoccupied condition.~~–~~ (Mode #G on MECH-3-A form)~~Mode E~~

☐Set "unoccupied" time schedule to include actual time or adjust time to be within the "unoccupied" time schedule (which ever is easier).

☐Engage the manual override. This could entail pushing an override button, triggering an occupancy sensor, or enabling some other form of override control.

Verify and Document

☐System reverts back to an "occupied" condition. For a DDC control system, verify the "active" heating and cooling setpoints correspond to those programmed for the occupied condition. For a programmable thermostat, the thermostat may display that it is in the "occupied" mode.

☐~~Supply fan turns on and stays on for the duration of the timed override period.~~

☐~~Heating or cooling is enabled as necessary to maintain space temperature setpoint. Actual operation of the equipment depends on whether heating or cooling is needed at the time of the test.~~

☐~~Outside air damper opens to minimum ventilation position and remains open for the duration of the timed override period. If the system has an economizer and there is call for cooling during the manual override, then the economizer should be enabled as necessary.~~

☐System reverts back to an "unoccupied" condition ~~at the end of the timed override~~when manual override time period expires. It may be necessary to adjust the length of the override period to minimize test time.

~~Step 8: For systems with an economizer, simulate cooling load during occupied condition (Mode H).~~

☐~~Set "occupied" time schedule to include actual time or adjust time to be within the "occupied" time schedule (which ever is easier).~~

☐~~Set cooling setpoint below actual space temperature.~~

~~Verify and Document~~

☐~~Supply fan operates continually during occupied condition.~~

☐~~Ensure all available cooling stages operate. This may require lowering the cooling setpoint even further so that multiple cooling stages can become enabled. For example, many programmable thermostats and DDC control algorithms use time delays and deviation from setpoint to enable multiple cooling stages. Setting the cooling setpoint very low should prevent the 1st stage of cooling from meeting setpoint and allow the system adequate time to enable the 2nd stage.~~

☐~~Heating is not enabled~~

☐~~System passes tests for economizer in **NJ.7.1 Air-Side Economizer Acceptance** and documented on form **MECH-4-A.**~~

~~Step 9: For systems with an economizer, simulate cooling load during unoccupied condition (Mode I).~~

☐~~Set "unoccupied" time schedule to include actual time or adjust time to be within the "unoccupied" time schedule (which ever is easier).~~

☐~~Set cooling setpoint above actual space temperature.~~

~~Verify and Document~~

☐~~Supply fan cycles on with call for cooling.~~

☐~~Heating is not enabled.~~

☐~~Cooling is enabled.~~

DRAFT

~~Outside air damper is closed.~~

~~System passes tests for economizer in **NJ.7.1 Air-Side Economizer Acceptance** and documented on form **MECH-4-A.**~~

Step ~~10~~9: Return system back to normal operating condition.

Ensure all schedules, setpoints, operating conditions, overrides, and control parameters are placed back at their initial conditions.

10.6.8 NA7.5.3 Air Distribution Systems Acceptance

At-a-Glance

NA7.5.3 Air Distribution Systems Acceptance Use Form MECH-4-A
Purpose of the Test
The purpose of this test is to verify all duct work associated with all non-exempt constant volume, single-zone, HVAC units (i.e. air conditioners, heat pumps, and furnaces) meet the material, installation, and insulation R-values per Standards Section §124(a) and leakage requirements outlined in Standards Section §144(k) for new duct systems or §149(b)1D for existing duct systems. As detailed in the Standard, this test is only required for single-zone units serving less than 5,000 ft^2 of floor area where 25% or more of the duct surface area is in one of the following spaces: Outdoors, or In a space directly under a roof where the U-factor of the roof is greater than the U-factor of the ceiling, or In a space directly under a roof with fixed vents or openings to the outside or unconditioned spaces, or In an unconditioned crawlspace; or In other unconditioned spaces. Within this criteria, this test applies to both new duct systems and to existing duct systems which are either being extended per Section 149(b)1D or the space conditioning system is altered by the installation or replacement of space conditioning equipment per Section 149(b)1E, including: replacement of the air handler; outdoor condensing unit of a split system air conditioner or heat pump; cooling or heating coil; or the furnace heat exchanger. Existing duct systems do not have to be tested if they are insulated or sealed with asbestos.

DRAFT

Instrumentation
Performance of this test will require measuring airflow. Equipment used: Fan flowmeter (a fan with a calibrated orifice used to pressurize the ducts) accuracy within 3% of measured flow. Contact CalCerts, CBPCA, or CHEERS for proper equipment. Digital manometer (pressure meter) accuracy within 0.2 Pascals. Duct leakage tests must be verified by a ~~certified~~ third party HERS ~~rating~~rater who has been~~agency~~ certified by a HERS provider that has been approved by the California Energy Commission. There are currently three company's that certify HERS raters. They can be found at http://www.CalCerts.com, http://www.CBPCA.org/ or http://www.CHEERS.org.
Test Conditions
For new construction all ductwork must be accessible for visual inspection. Hence, visual inspection must be performed before the ceiling is installed. All ductwork and grilles should be in place before performing the fan flow test to ensure system depicts normal operating configuration. Hence, testing must occur after visual inspection and installation of the diffusers. HVAC system must be installed and ready for system operation, including completion of all start-up procedures, per manufacturer's recommendations.
~~Time to Complete~~Estimated Time to Complete
Construction Inspection: 0.5 to 2 hours (depending on duct access for visual inspections and availability of construction material documentation –(-i.e. cut sheets, etc.) Equipment Test: 3 to 6 hours (depending on how long it takes to seal all supply diffusers and return grills and whether total system airflow is measured rather than calculated)
Acceptance Criteria
Flexible ducts are not compressed or constricted in any way. Duct connections meet the requirements of Standards Section 124 (new ducts only). Joints and seams are properly sealed according to requirements of Standards Section 124 (new ducts only). Duct R-values meet the minimum requirements of Standards Section 124(a) (new ducts only). Insulation is protected from damage and suitable for outdoor usage per Standards Section 124(f) (new ducts only). The leakage fraction for new HVAC ducts does not exceed 6% per Standards Section 144(k), where the leakage fraction is calculated by dividing total measured leakage flow rate by the total fan system flow rate. The leakage fraction for existing HVAC ducts does not exceed either 15% or overall system leakage is reduced by a 60% per Standard Sections 149(b)1D. The leakage fraction is calculated by either dividing total measured leakage flow rate by the total fan system flow rate *OR* by comparing "pre-modification" and "post-modification" measured system leakage values. Obtain HERS Rater field verification as described in Reference Nonresidential Appendix NA1. ~~as required by SNA5~~

DRAFT

Potential Issues and Cautions
If this test is to be applied to existing duct systems that are having alterations made to the ducts or the HVAC equipment attached to the ducts, test the system leakage before making the alterations. Ensure all of the supply and return diffusers/grills are sealed tightly, all access panels are in place, and duct ends are sealed tightly prior to leakage testing. After the test, remember to remove all blockages from the supply and return ducts (i.e., where the supply and return ducts at the HVAC unit were blanked off). Seal any holes drilled in the supply and return ducts for the static pressure probes. Since a certified California HERS rater must also verify duct leakage performance, it may be prudent to coordinate this test with the HERS rater so that the HERS rater can witness/verify the test simultaneously.

10.6.9 Test Procedure: NA7.5.3 Air Distribution Systems Acceptance, Use Form MECH-4-A

Scope of the Requirements

This test only applies to single-zone units serving less than 5,000 ft^2 of floor area where 25% or more of the duct surface area is in one of the following spaces:

Outdoors, or

In a space directly under a roof where the U-factor of the roof is greater than the U-factor of the ceiling, or

In a space directly under a roof with fixed vents or openings to the outside or unconditioned spaces, or

In an unconditioned crawlspace; or

In other unconditioned spaces

DRAFT

Within this criteria, this test applies to both new duct systems and to existing duct systems which are either being extended per Section 149(b)1D or the space conditioning system is altered by the installation or replacement of space conditioning equipment per Section 149(b)1E, including: replacement of the air handler; outdoor condensing unit of a split system air conditioner or heat pump; cooling or heating coil; or the furnace heat exchanger. Existing duct systems do not have to be tested if they are insulated or sealed with asbestos.

Purpose (Intent) of Test

The duct work of these small single-zone systems with ducts in unconditioned spaces must meet the duct leakage requirements of §144(k) for new ducts or §149(b)1D for existing ducts. However only new duct systems or the extension of existing ducts must meet the requirements of §124, including construction materials, installation, and insulation R-values. Existing ducts are not required

to be brought up to current standards in terms of insulation, or requirements for joint seams and fasteners.

Construction Inspection

The first component of the construction inspection is to assure that the duct system falls under the scope this test (see above *Scope of the Requirements*). The rest of the construction inspections apply to new duct systems or extensions of existing ducts only.

Perform a brief review of the drawings and construction to verify that the following items are specified in the construction set and installed in the field. A comprehensive review of each duct is not required.

Drawbands are either stainless steel worm-drive hose clamps or UV-resistant nylon duct ties. Verify compliance by reviewing material cut sheets and visual inspection.

Flexible ducts are not constricted in any way. For example, ensure the flex duct is not compressed against immovable objects, squeezed through openings, or contorted into extreme configurations (i.e., 180° angles). Flex duct that is constricted can increase system static pressure as well as compromise insulation values. Verify compliance through visual inspection.

Duct inspection and leakage tests shall be performed before access to ductwork and associated connections are blocked by permanently installed construction material. The intent here is to ensure construction modifications can be made, if necessary, before access to the ductwork is restricted.

Joints and seams are not sealed with a cloth-back rubber adhesive tape unless used in combination with mastic and drawbands. Verify compliance through visual inspection.

Duct R-values are verified. Duct insulation R-value shall comply with §124(a), 124(c), and 124(d), and can be verified by reviewing material cut sheets and through visual inspection.

Insulation is protected from damage, or suitable for outdoor usage, per §124(f). Verify compliance by reviewing material cut sheets and through visual inspection.

Functional Testing

Refer to the *Scope of the Requirements* section above to determine when this test is required. When required, the test will often be conducted by the installer and verified by a HERS rater using the procedures outlined in ~~the Non~~Reference ~~Rresidential~~Nonresidential ~~ACM Manual~~, Appendix NA2. ~~RA3NG~~, ~~Section RA3.1.44.3.8.2~~ and documented on compliance form, MECH-4-A.

The primary metric calculated is the leakage fraction of **total fan flow**. Total fan flow is based on the cooling capacity of heating and cooling equipment and

based on the heating capacity of heating only equipment. As described in Nonresidential Appendix Section NA2.3.6, ~~Total~~total fan flow is determined to be 400 cfm/ton for cooling or heating/cooling equipment where a ton of cooling capacity is equal to 12 kBtu/h of cooling capacity.~~.~~ For heating only equipment, total fan flow is 21.7 cfm per kBtuh rated output capacity. The cooling and heating capacity of equipment can be found on the product nameplate .

For new duct systems, the installer blocks off all of the supply and return registers or diffusers and pressurizes the ducts with a fan flowmeter to 25 Pascals (Pa) and records the leakage airflow measured by the fan flowmeter. This leakage amount at 25 Pa is divided by the total fan flow to generate the leakage percentage value. If this leakage percentage is less than or equal to 6%, the system passes. If the system does not pass, then the installer should look ~~of~~locate and seal ~~all~~any ~~accessible~~ leaks/~~ and seal any~~ gaps until the system conforms to the maximum 6% leakage requirement. It is easier to find leaks with the ducts pressurized as one can often feel the air escaping from larger leaks/gaps.

For existing duct systems that are having additional ducts added or are having major repairs or replacement of equipment connected to the ducts, the leakage rate of the existing duct system should be tested first before any alterations proceed. This leakage amount is the **Pre-test** leakage value. After the additional ducts or equipment repairs or replacements conducted, then the ducts are sealed along any fittings or joints. After blocking off all supply and return registers or diffusers, the ducts are then pressurized using a fan flowmeter to 25 Pascals (Pa) and the fan flowmeter measures the **final test** leakage rate at 25 Pa. This final test leakage amount at 25 Pa is divided by the total fan flow to generate the leakage percentage value. If this leakage percentage is less than or equal to 15%, the system passes. If the system does not pass, then the installer should ~~look~~locate and seal ~~of all~~any accessible leaks/~~ and seal any~~ gaps. It is easier to find leaks with the ducts pressurized as one can often feel the air escaping from larger leaks/gaps.

If after all accessible leaks are sealed, the leakage percentage is still above 15%, the installer has two options:

If the final test leakage is 60% lower than the pre-test leakage rate and a visual inspection finds no accessible leaks, crushed ducts, animal infestation, rusted ducts etc., this will be sufficient to pass this requirement.

If the system meets neither the 15% leakage percentage nor was it possible to reduce the pre-tested leakage value by 60%, then the system must pass a visual inspection by a HERS rater. Unlike the other methods of compliance this method cannot be sampled – every system must be inspected by the HERS rater.

After completing the air distribution system acceptance test, the installer shall affix a sticker to the air handler access door describing if the system met the prescriptive leakage requirements (6% leakage for new systems and 15% for existing systems) or if the system failed to meet this standard but that all accessible leaks were sealed. The installer supplies the stickers and can have their company logo on them. However, the preceding- information must be on the sticker in 14 pt font or larger.

DRAFT

Document management

After conducting the air distribution system acceptance test, the installer or the permit applicant ~~will~~must arrange to have ~~contact the~~a HERS rater ~~rater so that the results can be validated~~perform the required third party verification. ~~The~~Copies of the *Construction Inspection (part 1 of 2)* and the *Installer Certification (part 2 of 2)* ~~portion~~sections of the MECH-4-A ~~will~~should be sent to the HERS Provider, HERS rater, the Builder (General Contractor or Construction Manager), the Building Owner at Occupancy and a copy must be posted at the construction site and made available for all applicable inspections by the enforcement agency ~~the Building Department~~.

The HERS rater ~~will~~must ~~validate the results~~perform field verification and diagnostic testing ~~by filling out the HERS Rater Compliance Statement portion of MECH-4-A~~, document the results on a Certificate of Field Verification and Diagnostic Testing, and send copies of the Certificate of Field Verification and Diagnostic Testing to the Builder (General Contractor or Construction Manager), the Building Owner at Occupancy, and a copy must be ~~the~~ posted at the construction site and made available for all applicable inspections by the enforcement agency~~Building Department~~. If the test complies by virtue of the tested leakage (6% for new ducts and 15% for existing duct) or by virtue of a 60% leakage reduction after the system was repaired or altered, the building permit applicant may choose for the HERS field verification to be completed for the permitted space conditioning unit alone, or alternatively as part of a designated sample group of up to seven space conditioning units for which the same installing company has completed work that requires field verification and diagnostic testing for compliance. If the sampling method is chosen, the HERS rater ~~will~~must randomly select one system from the group for verification ~~sample ducts system by installer, having only to sample every one out of seven systems~~. For existing duct systems that fail both the 15% leakage rate and the 60% reduction in leakage, the HERS rater ~~will~~must validate all of these systems (100% sampling) by visual inspection. Refer to Nonresidential Appendix Section NA1.5 for additional information about sampling.

Reference material from Reference ~~Rresidential~~Residential~~Nonresidential ACM Manual~~ Appendix ~~RANA2.NG~~

Below are excerpts of air distribution system acceptance testing requirements from ~~the~~ Reference ~~Residential~~Nonresidential~~ACM Manual~~ Appendix Section ~~NGRA3.1:~~NA2.1 Air Distribution Diagnostic Measurement and Field Verification ~~Standard Procedure for Determining the Energy Efficiencies of Single-Zone Nonresidential Air Distribution Systems in Buffer Spaces or Outdoors~~.

~~RANG.3.4.11.2~~NA2.2 Instrumentation Specifications

The instrumentation for the air distribution diagnostic measurements shall conform to the following specifications:

DRAFT

~~NG.4.1.RA3.1.2.1~~NA2.2.1 Pressure Measurements

All pressure measurements shall be measured with measurement systems (i.e. sensor plus data acquisition system) having an accuracy of ±0.2 Pa. All pressure measurements within the duct system shall be made with static pressure probes. Dwyer A303 or equivalent.

~~NG.4.1.2RA3.1.2.2~~NA2.2.2 Duct Leakage Measurements

~~The measurement of~~duct leakage air flows during duct leakage testing shall be measured with digital gauges that have an accuracy of ±3% or better~~of measured flow using digital gauges~~.

~~RA3.1.2.3 Calibration~~

All instrumentation used for duct leakage diagnostic measurements shall be calibrated according to the manufacturer's calibration procedure to conform to the ~~above~~ accuracy requirement specified Section ~~RA3.1.2~~NA2.2. All testers performing diagnostic tests shall obtain evidence from the manufacturer that the equipment meets the accuracy specifications. The evidence shall include equipment model, serial number, the name and signature of the person of the test laboratory verifying the accuracy, and the instrument accuracy. All diagnostic testing equipment is subject to re-calibration when the period of the manufacturer's guaranteed accuracy expires.

~~NG.4.2RA3.1.3 Apparatus~~

~~RA3.1.3NG.4.2.1~~ NA2.2.3 Duct Pressurization Apparatus

The apparatus for fan pressurization duct leakage measurements shall consist of a duct pressurization and flow measurement device meeting the specifications in Section ~~NGRA.34.1.2.~~NA2.2.

~~RA3.1.4.2~~ NA2.3.6 ~~NG.4.3.7 TotaSystem~~Total Fan Flow

~~F~~The total fan flow for an air conditioner or a heat pump for all climate zones shall be equal to 400 cfm/rated ton with rated tons defined by unit scheduled capacity at the conditions the unit's ARI rating standard from Section 112 of the Standards. Airflow through heating only furnaces shall be based on 21.7 cfm/kBtuh rated output

~~or the purpose of establishing duct leakage criteria, the system fan flow shall be calculated using RA3.1.4.2.1, RA3.1.4.2.2, or RA3.1.4.2.3.~~

~~The total fan flow for an air conditioner or a heat pump for **all climate zones** shall be equal to 400 cfm/rated ton with rated tons defined by unit scheduled capacity at the conditions the unit's ARI rating standard from Section 112 of the Standard. Air flow through heating only furnaces shall be based on 21.7 cfm/kBtuh rated output capacity.~~

~~RA3.1.4.3~~ NA2.3.8 ~~NG.4.3.8.2~~ Diagnostic Duct Leakage

DRAFT

Diagnostic duct leakage measurement is used by installers and raters to verify that total leakage meets the criteria for any sealed duct system specified in the compliance documents. Table ~~NGRA-3.1.2~~NA2-2 shows the leakage criteria and test procedures that may be used to demonstrate compliance. ~~In addition to the minimum tests shown, existing duct systems may be tested to show they comply with the criteria for new duct systems.~~

Table ~~RA3.1-2~~NA2-2~~5 – NG-3~~ Duct Leakage Tests

Case	User and Application	Leakage criteria, % of total fan flow	Procedure
Sealed and tested new duct systems	Installer Testing HERS Rater Testing	6%	NA2.3.8.1~~RA3.1.4.3.1~~ ~~NG 4.3.8.2.1 &~~
Sealed and tested altered existing duct systems	Installer Testing HERS Rater Testing	15% Total Duct Leakage	NA2.3.8.1~~RA3.1.4.3.1~~ ~~NG 4.3.8.2.1 & RA3.1.4.3.1~~
	Installer Testing and Inspection HERS Rater Testing and Verification	60% Reduction in Leakage and Visual Inspection	NA2.3.8.2~~RA3.1.4.3.5~~ NA2.3.8.4~~RA3.1.4.3.6~~ ~~RA3.1.4.3.7~~ ~~NG 4.3.8.2.2~~ ~~RC4.3.6 and RC4.3.7~~
	Installer Testing and Inspection HERS Rater Testing and Verification	Fails Leakage Test but All Accessible Ducts are Sealed And Visual Inspection	NA2.3.8.3~~RA3.1.4.3.6~~ NA2.3.8.4~~RA3.1.4.3.7~~ ~~RA3.1.4.3.8~~ ~~NG 4.3.8.2.3~~ ~~RC4.3.6 and RC4.3.7~~

~~NG.4.3.8.2.1~~ NA2.3.8.1~~RA3.1.4.3.1~~ Total Duct Leakage Test from Fan Pressurization of Ducts

The objective of this procedure is for an installer to determine or a rater to verify the total leakage of a new or altered duct system. The total duct leakage shall be determined by pressurizing ~~both~~ the entire duct system to +25 Pa ~~supply and return ducts to 25 Pascals~~ with respect to outside with all ceiling diffusers/grilles and HVAC equipment installed. When existing ducts are to be altered, this test shall be performed prior to and after duct sealing. The following procedure shall be used for the fan pressurization tests:

DRAFT

Verify that the air handler, supply and return plenums and all the connectors, transition pieces, duct boots and registers are installed. The entire system shall be included in the test.

For newly installed or altered ducts, verify that cloth backed rubber adhesive duct tape has not been used.

Seal all the supply and return registers, except for one return register or the system fan access. Verify that all outdoor air dampers and /or economizers are sealed prior to pressurizing the system.

Attach the fan flowmeter device to the duct system at the unsealed register or access door.

Install a static pressure probe at a supply.

Adjust the fan flowmeter to produce a + 25 Pa~~scal~~ (0.1 in water) pressure ~~difference between~~ at the supply plenum with respect to ~~duct and~~ the outside or with respect to the building space with the entry door open to the outside.

Record the flow through the flowmeter ($Q_{total,25}$) - this is the total duct leakage flow at 25 Pa~~scals~~.

Divide the leakage flow by the total fan flow determined by the procedure in Section3.1.4.2 and convert to a percentage. If the leakage flow percentage is less than the criteria from Table ~~RA3.1-2~~NA2-2 the system passes. ~~6% for new duct systems or less than 15% for altered duct systems, the system passes.~~

Duct systems that have passed this total leakage test will be sampled by a HERS rater to show compliance.

DRAFT

NA2.3.8.2~~RANG3.1.4.3.5 4.3.8.2.2~~ Leakage Reduction~~Improvement~~ from Fan Pressurization of Ducts

For altered existing duct systems ~~which~~that have a higher leakage percentage than the Total Duct leakage criteria in Section NA2.3.8.1~~RA3.1.4.3.1NG 4.3.8.2.1 or Leakage Outside RA3.1.4.3.1.4 test~~, the objective of this test is to show that the original leakage is reduced through duct sealing as specified in ~~Table~~ **Error! Reference source not found.**~~Table RA3.1-2~~NA2.2~~NG 3~~. -The following procedure shall be used:

Use the procedure in NA2.3.8.1~~RA3.1.4.3.1 NG 4.3.8.2.1~~ to measure the leakage before commencing duct sealing.

After sealing is complete use the same procedure to measure the leakage after duct sealing.

Subtract the sealed leakage from the original leakage and divide the remainder by the original leakage. If the leakage reduction is 60 percent~~%~~ or greater of the original leakage, the system passes.

Complete the Visual Inspection specified in NA2.3.8.4~~RA3.1.4.3.7NG 4.3.8.2.4~~.

Duct systems that have passed this leakage reduction test and the visual inspection test ~~will~~must then be ~~sampled~~verified by a HERS rater to ~~show~~demonstrate compliance.

~~NG 4.3.8.2.3 Sealing~~NA2.3.8.3~~RA3.1.4.3.6~~ Sealing of All Accessible Leaks

For altered existing duct systems that do not pass the Total Leakage test NA2.3.8.1~~RA3.1.4.3.1~~, or~~Leakage to Outside (RA3.1.4.3.3) or~~ Leakage Improvement (NA2.3.8.2~~RA3.1.4.3.4~~) tests, ~~(NG 4.3.8.2.1),~~ the objective of this test is to show that all accessible leaks are sealed.~~ and that excessively damaged ducts have been replaced.~~ The following procedure shall be used:

- At a minimum, complete the procedure in NA2.3.8.1~~RA3.1.4.3.1~~ to measure the leakage before commencing duct sealing.
- Seal all accessible ducts.
- After sealing is complete use the same procedure to measure the leakage after duct sealing.

~~Complete each of the leakage tests~~

- Complete the Visual Inspection as specified in NA2.3.8.4~~RA3.1.4.3.8NG 4.3.8.2.4~~.

All duct systems that could not pass either the total leakage test or the leakage ~~improvement~~reduction test ~~will~~must be ~~tested~~verified by a HERS rater to ~~show~~demonstrate compliance. This is a sampling rate of 100%.

~~NG 4.3.8.2.4~~NA2.3.8.4~~RA3.1.4.3.8~~ Visual Inspection of Accessible Duct Sealing

For altered existing duct systems that fail to be sealed to 15% of total fan flow, the objective of this inspection is to confirm that all accessible leaks have been sealed~~ and that excessively damaged ducts have been replaced~~. The following procedure shall be used:

1. Visually inspect to verify that the following locations have been sealed:

   Connections to plenums and other connections to the forced air unit

   Refrigerant line and other penetrations into the forced air unit

   Air handler door panel (do not use permanent sealing material, metal tape is acceptable)

   Register boots sealed to surrounding material

   Connections between lengths of duct, as well as connections to takeoffs, wyes, tees, and splitter boxes.

2. Visually inspect to verify that portions of the duct system that are excessively damaged have been replaced. Ducts that are considered to be excessively damaged are:

   Flex ducts with the vapor barrier split or cracked with a total linear split or crack length greater than 12 inches

   Crushed ducts where cross-sectional area is reduced by 30% or more

DRAFT

Metal ducts with rust or corrosion resulting in leaks greater than 2 inches in any dimension

Ducts that have been subject to animal infestation resulting in leaks greater than 2 inches in any dimension

NA2.3.8.5~~NG 4.3.8.4~~ Labeling requirements for tested systems

A sticker shall be affixed to the exterior surface of the air handler access door with the following text in 14 point font describing the following:

California Air Distribution Acceptance (Duct Leakage) Certification

"The leakage of the air distribution ducts was found to be ___CFM @ 25 Pascals or ___% of total fan flow.

This system (check one):

☐ Has a leakage rate that is **equal to or lower** than the prescriptive requirement of 6% leakage for new duct systems or 15% leakage for alterations to existing systems. It meets the prescriptive requirements of California Title 24 Energy Efficiency Standards.

☐ Has a leakage rate **higher than** 6% leakage for new duct systems or 15% leakage for altered existing systems. It does NOT meet ~~the meet~~ or exceed the prescriptive requirements of the Title 24 standards. However, all accessible ducts were sealed.

Signed: _____

Print name: _____

Print Company Name:_____

Print Contractor License No:_____

Print Contractor Phone No:_____

Do not remove this sticker

DRAFT

10.6.10 NA7.5.4 Air Economizer Controls Acceptance

At-a-Glance

~~NJ.7.1~~NA7.5.4 ~~(~~Air ~~-Side)~~ Economizer Controls Acceptance Use Form MECH-~~4~~5~~-~~A
Purpose of the Test
The purpose of functionally testing an air~~-side~~ economizer cycle is to verify that an HVAC system uses ~~outside air~~outdoor air to satisfy space cooling loads when ~~outside air~~outdoor air conditions are acceptable. There are two types of economizer controls~~:~~; ~~stand-alone~~Stand-alone packages and DDC controls. The stand-alone packages are commonly associated with small unitary rooftop ~~packaged~~ HVAC equipment and DDC controls are typically associated with built-up or large packaged air handling systems. Test procedures for both economizer control types are provided. ~~□~~ For units with economizers that are factory installed and certified operational by the manufacturer to California Energy Commission economizer quality control requirements, the ~~in~~ in-field economizer functional tests~~acceptance~~ ~~test does~~do not have to be conducted. A copy of the ~~certification~~ manufacturer's certificate must be attached to the MECH-~~4~~5~~-~~A.~~ All pre-test inspections must be completed regardless of whether the economizer is factory or field installed.~~ However, the Construction Inspection, including compliance with high temperature lockout temperature setpoint, must be completed regardless of whether the economizer is field or factory installed.
Instrumentation
None required
Test Conditions
Equipment installation is complete (including HVAC unit, duct work, sensors, control system, thermostats). ~~Simple systems~~Non-DDC DX systems are required to have a two-stage thermostat. HVAC system must be ready for system operation, including completion of all start-up procedures per manufacturer's recommendations. For those units having DDC controls, it may be necessary to use the building automation system (BAS) to override or temporarily modify the variable(s) to achieve the desired control. BAS programming for the economizer, cooling valve control, and related safeties must be complete. For built-up systems all interlocks and safeties must be operable--for example, freeze protection, limit switches, static pressure cut-out, etc. Document the initial conditions before overrides or manipulation of the settings. All systems must be returned to normal at the end of the test.
~~Time to Complete~~Estimated Time to Complete
Construction Inspection: 0.5 to 1 hours (depending on familiarity with the controls) ~~Equipment Testing~~Functional testing: 0.5 to 2 hours (depending on familiarity with the controls and issues that arise during testing)

DRAFT

Acceptance Criteria
If the economizer is factory installed and certified, a valid factory certificate is required for acceptance. No additional equipment tests are necessary. Air~~-Side~~ Economizer lockout setpoint complies with Table 144-C per Standards Section 144(e)3. Outside sensor location accurately reads true outdoor air temperature and is not affected by exhaust air or other heat sources. All sensors are located appropriately to achieve the desired control. During economizer mode, the ~~outside air~~outdoor air damper modulates open to a maximum position and return air damper modulates 100% closed. The ~~outside air~~outdoor air damper is 100% open before mechanical cooling is enabled and for units 75,000 Btuh and larger remains at 100% open while mechanical cooling is enabled (economizer integration when used for compliance). When the economizer is disabled, the ~~outside air~~outdoor air damper closes to a minimum position, the return damper modulates 100% open, and mechanical cooling remains enabled.
Potential Issues and Cautions
If conditions are below freezing when test is performed, coil(s) may freeze when operating at 100% ~~outside air~~outdoor air. Outdoor air and relief dampers should be closed when the system is in unoccupied and warm-up modes, preventing problems with unconditioned air entering the building during unoccupied hours. If the damper interlocks fail and the outdoor air damper does not open before the return damper closes, damage to the air handling unit or associated duct work may occur. Air~~-Side~~ Economizers with poor mixing can have excessively stratified air streams that can cause comfort problems or freezestat trips. Mixing problems are more likely to occur as the VAV system reduces flow, leading to reduced velocities in the mixing box and through the dampers. Check for exterior doors standing open and other signs of building over-pressurization when all units are on full economizer cooling (100% OSA).

DRAFT

~~1..7~~10.6.11 Test Procedure: ~~NJ.7.1~~NA7.5.4 Air~~-Side~~ Economizer Acceptance, Use Form MECH-4~~-~~A

Purpose (Intent) of Test

There are basically two types of economizer controls: 1) stand-alone packages (~~i.e.~~e.g. Honeywell W7459A, Trane Precedent or Voyager, Carrier Durablade, which are most common); and 2) DDC controls. The stand-alone packages are most commonly associated with rooftop packaged HVAC equipment and DDC controls are typically associated with built-up or large packaged air handling systems. Test procedures for both economizer control types have been developed and a brief description of each control strategy is provided below.

If the economizer is factory installed and certified **by the manufacturer to the California Energy Commission,** no field testing is required.

The typical economizer control will have the following components: a controller (stand alone or DDC); an actuator that will drive both outside

and return air dampers (sometimes separate actuators in built-up systems); an ~~outside air~~outdoor air sensor; a return air sensor where differential high-limit controls are used; and a mixed/discharge air temperature sensor to which the economizer is controlled. The sensor types used to measure outside and return air include dry-bulb temperature sensors, enthalpy sensors, and electronic enthalpy sensors (a combination of dry-bulb and enthalpy).

In general, a first-stage call for cooling from the zone thermostat will enable the economizer controller, which will either allow the ~~outside air~~outdoor air damper to open fully if ~~outside air~~outdoor air conditions are suitable or enable the compressor. The four strategies available for economizer control are: 1) fixed dry-bulb; 2) fixed enthalpy; 3) differential dry-bulb; and 4) differential enthalpy. The fixed dry-bulb and enthalpy strategies both compare ~~outside air~~outdoor air conditions to a "fixed" setpoint to determine if the economizer can be enabled, whereas differential dry-bulb and enthalpy strategies compares ~~outside air~~outdoor air and return air conditions to enable the economizer when ~~outside air~~outdoor air conditions are more favorable. When the zone thermostat calls for a second-stage of cooling, the compressor is enabled to provide mechanical cooling. The economizer is considered integrated if the economizer can operate simultaneously with the compressor or chilled water coil. If the controls disable the economizer when the compressor (or chilled water coil) is on, it is considered non-integrated. Where economizers are required by the Standards, they must have integrated controls.

Construction Inspection

Air~~-Side~~ Economizer high temperature lockout setpoint complies with Standards Table 144-C per §144(e)3. For DDC control systems, the lockout setpoint should be a control parameter in the sequence of operations that can be verified for compliance. For stand-alone packages, the lockout setpoint is determined by settings on the controller (for example A, B, C, D settings on the Honeywell W7459A controller or dip switches on a Trane control package). Consult with manufacturer's literature to determine the appropriate A, B, C, D or dip switch settings. Note that snap disks may not comply with lockout requirements in some climate zones. A snap disk is a thermostat-type control device with a fixed setpoint. The snap disk will close the economizer circuit when air temperature is below setpoint and open the circuit when the air temperature exceeds setpoint. Snap disks are not adjustable and can disable the economizer anywhere between 65°F and 70°F. Hence, snap disks will fail unless the manufacturer can provide documentation verifying the snap disk operating temperature complies with Standards Table 144-C. The control complies if the high limit lockout setpoint is less than the values specified in the table.

DRAFT

Table – Standards Table 144-C Air Economizer High Limit Shut Off Control Requirements

Device Type	Climate Zones	Required High Limit (Economizer Off When):	
		Equation	Description
Fixed Dry Bulb	1, 2, 3, 5, 11, 13, 14, 15 & 16	T_{OA} > 75ºF	~~Outside air~~Outdoor air temperature exceeds 75ºF
	4, 6, 7, 8, 9, 10 & 12	T_{OA} > 70ºF	~~Outside air~~Outdoor air temperature exceeds 70°F
Differential Dry Bulb	All	$T_{OA} > T_{RA}$	~~Outside air~~Outdoor air temperature exceeds return air temperature
Fixed Enthalpy[a]	4, 6, 7, 8, 9, 10 & 12	h_{OA} > 28 Btu/lb[b]	~~Outside air~~Outdoor air enthalpy exceeds 28 Btu/lb of dry air[b]
Electronic Enthalpy	All	(T_{OA}, RH_{OA}) > A	~~Outside air~~Outdoor air temperature/RH exceeds the "A" set-point curve[c]
Differential Enthalpy	All	$h_{OA} > h_{RA}$	~~Outside air~~Outdoor air enthalpy exceeds return air enthalpy
a Fixed Enthalpy Controls are prohibited in climate zones 1, 2, 3, 5, 11, 13, 14, 15 & 16.			
b At altitudes substantially different than sea level, the Fixed Enthalpy limit value shall be set to the enthalpy value at 75°F and 50% relative humidity. As an example, at approximately 6000 foot elevation the fixed enthalpy limit is approximately 30.7 Btu/lb.			
c Set point "A" corresponds to a curve on the psychometric chart that goes through a point at approximately 75°F and 40% relative humidity and is nearly parallel to dry bulb lines at low humidity levels and nearly parallel to enthalpy lines at high humidity levels.			

- For stand-alone packages only, verify that a two-stage thermostat is used, and that the system is wired so that the economizer is the first stage of cooling and the compressor is the second stage. The two-stage space thermostat must have wires connected to Y1 and Y2 on the thermostat landed on the respective Y1 and Y2 terminals at the unit. There should not be any jumpers installed across Y1 and Y2 at the thermostat or the unit. For York units in particular, verify that the "J1" jumper located on the OEM board has been removed. The units come from the factory with the "J1" jumper installed and must be removed in the field (the "J1" jumper is the same as having a jumper across the Y1 and Y2 terminals – the compressor and economizer come on simultaneously on a call for cooling, which effectively makes the economizer inoperable). Note that if a single-stage thermostat is installed, there should not be any jumper between Y1 and Y2.

- Air~~-Side~~ Economizer outside (lockout) sensor location is adequate to achieve the desired control. ~~Outside air~~Outdoor air sensors should be located away from building exhausts and other heat sources like air-cooled condensers and cooling towers; should be open to the air but not exposed to direct sunlight (unless it is provided with a radiation shield); and could be located either directly in the air stream or remote from the unit (for example mounted on a north-facing wall).

- Ensure all systems have some method of relief to prevent over pressurization of the building. Most packaged HVAC units with stand-alone economizer controls will typically have barometric dampers to exhaust the return air

DRAFT

when the return dampers are fully closed and the unit is in economizer mode. Built-up and larger packaged air handling units may control return fans, relief dampers, or dedicated relief fans to actively maintain building pressurization when the unit is in economizer mode.

~~*Equipment Testing*~~*Functional Testing*

Since the test procedures vary significantly between stand-alone packages and DDC controls, the procedures for each system type are provided. In addition, there can be significant differences in test procedures between various stand-alone packages themselves. Contact your equipment supplier to see if they have equipment and test protocols that will allow you to easily field test their economizer to ACM ~~NJ.7.1~~NA7.5.4 Air~~-Side~~ Economizer Acceptance for filling out form MECH-4~~-~~A. While it would not be feasible to cover every variation, three of the most common stand-alone packages are discussed below. The common feature of these procedures is that they all exercise the economizer function either by enabling an on-board diagnostic function or by "fooling" the control by inserting resistors that simulate mild weather conditions while the system is in cooling mode.

Stand-alone Package

Trane Voyager and Precedent Series. Both of these control packages have internal test sequences that can be used to verify proper system operation. Each operating mode is enabled by providing a momentary (2 second) jump across the test terminals.

Step 1. Use internal test sequences to enable operating modes.

Refer to manufacturer's literature for detailed description of the procedures, however the basic steps are outlined below:

- ~~☐~~1st jumper – supply fan is enabled
- ~~☐~~2nd jumper – economizer mode is enabled
- ~~☐~~3rd jumper – compressor is enabled
- ~~☐~~4th jumper – heating stage is enabled

DRAFT

Verify and Document

- ~~☐Outside air~~Outdoor air damper is at minimum position when the supply fan is enabled.
- ~~☐~~The ~~outside air~~outdoor air damper opens completely and the return damper closes completely during economizer mode.
- ~~☐Outside air~~Outdoor air damper is at minimum position when the compressor is enabled.

- ~~Outside air~~Outdoor air damper is at minimum position when heating is enabled.

- Verify the mixed/discharge cut-out sensor wire is landed on the SA terminal on the OEM board. If the sensor wire is not landed on the SA terminal, the economizer will not operate.

Step 2. Return system to normal operation.

Taking the system out of test mode can be accomplished by shutting power off to the unit. The unit will return to normal operation when power is restored.

Verify and Document

- Final economizer changeover dip-switch settings comply with Standards Table 144-C per §144(e)3.

Honeywell controllers. There are many Honeywell controllers available, but the most common is the W7459A series and most of the procedures used to check out this controller can be used on the others as well (always refer to manufacturer's literature for additional information). All Honeywell controllers have an ~~adjustment pot with "A, B, C, D" settings. For a fixed changeover strategy, the position of the adjustment pot with respect to the A, B, C, D settings will determine the economizer lockout setpoint. For a differential changeover strategy, the controller should be on the "D" setting. Note that the controllers typically come from the factory with the adjustment pot at the "D" setting, but this does not mean a differential control strategy is being used. The easiest way to verify a differential changeover strategy is to look at the S_R and + terminals on the controller. If standard sensor wires are connected to the terminals, then it is a differential control strategy. If there is a 620 Ohm resister jumpered across these terminals, then a fixed control strategy is being used.~~

~~Step 1. Simulate a cooling load and enable the economizer.~~

~~The simplest way to determine if the controller is functioning is to:~~

- ~~Turn the unit OFF at the disconnect.~~

- ~~Install a 1.2K Ohm resister across the S_O and + terminals on the controller (this is the outside air~~outdoor air ~~temperature sensor).~~

Install a 620 Ohm resister across the S_R and + terminals on the adjustment pot with "A, B, C, D" settings. For a fixed changeover strategy, the position of the adjustment pot with respect to the A, B, C, D settings will determine the economizer lockout setpoint. For a differential changeover strategy, the controller should be on the "D" setting. Note that the controllers typically come from the factory with the adjustment pot at the "D" setting, but this does not mean a differential control strategy is being used. The easiest way to verify a differential changeover strategy is to look at the S_R and + terminals on the controller. If standard sensor wires are connected to the terminals, then it is a differential control strategy. If there is a 620 Ohm resister jumpered across these terminals, then a fixed control strategy is being used.

DRAFT

Step 1. Simulate a cooling load and enable the economizer.

The simplest way to determine if the controller is functioning is to:

Turn the unit OFF at the disconnect.

Install a 1.2K Ohm resister across the S_O and + terminals on the controller (this is the outdoor air temperature sensor).

☐ controller (this resister is already installed for a fixed control strategy and must only be installed if there is a return air sensor).

☐ Turn the economizer setpoint adjustment pot all the way to the "A" setting.

☐ Install a jumper across the R and Y1 terminals at the unit terminal strip.

☐ Disconnect the wire from the Y2 terminal at the unit terminal strip (this will prevent the 2nd stage of cooling from being enabled during the test).

☐ Turn the unit back ON at the disconnect.

Verify and Document

☐ ~~Outside air~~Outdoor air dampers open fully. Adjust linkages, if necessary, to ensure dampers are at the desired position.

☐ Return air dampers close completely. Adjust linkages, if necessary, to ensure dampers are at the desired position.

☐ Compressor does not run.

Step 2. Simulate a cooling load and disable the economizer.

Continuing from above:

☐ Turn the unit OFF at the disconnect.

☐ Leave the 1.2K Ohm resister across the S_O and + terminals and 620 Ohm resister across the S_R and + terminals in place.

☐ Turn the economizer setpoint adjustment pot all the way to the "D" setting.

☐ Leave jumper across the R and Y1 terminals at the unit terminal strip.

☐ Leave Y2 disconnected.

☐ Turn the unit back ON at the disconnect.

DRAFT

Verify and Document

- ~~Outside air~~Outdoor air dampers close to minimum position. Adjust linkages, if necessary, to ensure dampers are at the desired position.

- Return air dampers open completely. Adjust linkages, if necessary, to ensure dampers are at the desired position.

- Compressor operates.

Step 3: Return system back to normal operating condition.

Remove all jumpers and reconnect all wires.

Verify and Document

- Final economizer changeover setting (A, B, C, D) complies with Standards Table 144-C per §144(e)3. Consult with manufacturer's literature to determine the appropriate A, B, C, D setting for both fixed dry-bulb or enthalpy control strategies. The controller must be set on "D" for all differential control strategies.

Carrier Durablade. Most Carrier HVAC units utilize the "Durablade" economizer control package, which uses a single damper "blade" that slides on a worm gear across both the outside and return air streams. Blade position is determined by end-switches that will cut power to the drive-motor when desired damper position is reached. Typically the economizer will be controlled by either a fixed dry-bulb or fixed enthalpy control strategy. Enthalpy control typically utilizes a customized Honeywell controller and the checkout procedures outlined above can be used to determine economizer functionality. The following test procedures should be followed for a fixed dry-bulb strategy.

Step 1. Simulate a cooling load and enable the economizer.

The simplest way to determine if the economizer is functioning is to:

- Turn the unit OFF at the disconnect.

- Install a jumper across the ~~outside air~~outdoor air temperature thermostat.

- Install a jumper across the R and Y1 terminals at the unit terminal strip.

- Disconnect the wire from the Y2 terminal at the unit terminal strip (this will prevent the 2nd stage of cooling from being enabled during the test).

- Turn the unit back ON at the disconnect.

Verify and Document

- Damper blade slides completely across the return air duct and mixed air plenum is open to the ~~outside air~~outdoor air intake. Adjust end-switches as necessary to achieve the desired position.

DRAFT

- ☐ Compressor does not run.

Step 2. Simulate a cooling load and disable the economizer.

Continuing from above:

- ☐ Turn the unit OFF at the disconnect.
- ☐ Remove the jumper and disconnect the ~~outside air~~outdoor air sensor completely from the circuit.
- ☐ Leave Y2 disconnected.
- ☐ Turn the unit back ON at the disconnect.

Verify and Document

- ☐ Damper blade returns to minimum ~~outside air~~outdoor air position. Adjust end switches as necessary to achieve the desired position.
- ☐ Compressor operates.

Step 3: Return system back to normal operating condition.

Remove all jumpers and reconnect all wires.

Verify and Document

- ☐ Final economizer changeover setting complies with Standards Table 144-C per §144(e)3.

DDC Controls

Step 1. Simulate a cooling load and enable the economizer.

Simulating a cooling load and enabling the economizer can be accomplished by:

- ☐ Commanding the discharge air temperature setpoint to be lower than current discharge conditions.
- ☐ For a fixed dry-bulb or enthalpy control strategy, raising the economizer lockout setpoint to be above current ~~outside air~~outdoor air conditions (if this is not the case already) to enable the economizer.
- ☐ For a differential dry-bulb or enthalpy control strategy; raising the return air conditions to be above current ~~outside air~~outdoor air conditions (if this is not the case already) to enable the economizer.

Verify and Document

- ☐ ~~Outside air~~Outdoor air damper modulates open to a maximum position.

DRAFT

- Return air damper modulates closed and is 100% closed when the ~~outside air~~outdoor air dampers are 100% open. Return dampers should close tight to minimize leakage.

- ~~Outside air~~Outdoor air damper is 100% open before mechanical cooling is enabled. This implies that cooling coil valves in chilled water systems should not modulate or compressors in DX systems should not start until the unit is in 100% economizer mode. Depending on the speed of the PID loop, it is possible that mechanical cooling could be commanded on before the ~~outside air~~outdoor air dampers actually stroke fully open. If this occurs, it does not mean the system has failed the test. One option is to watch the output of the PID loop and verify that the *COMMAND* sent to the ~~outside air~~outdoor air damper reaches 100% before a command is sent to the mechanical cooling devices.

- Although space pressurization requirements are not part of the current Standards, most systems employ some form of control strategy to maintain space pressure during economizer mode. Control strategies can include, but are not limited to: 1) return fan speed control; 2) dedicated relief fans; or 3) relief damper controls. Observe that the space served by the air handling unit being tested does not appear to experience any pressurization problems (i.e., perimeter doors pushed open or excessive airflow between zones served by different units).

Step 2. Simulate a cooling load and disable the economizer.

Continuing from the procedures outlined in Step 1:

- Keep the discharge air temperature setpoint lower than current discharge conditions.

- For a fixed dry-bulb or enthalpy control strategy, lower the economizer lockout setpoint to be below current ~~outside air~~outdoor air conditions (if this is not the case already) to disable the economizer.

- For a differential dry-bulb or enthalpy control strategy; lower the return air conditions to be below current ~~outside air~~outdoor air conditions (if this is not the case already) to disable the economizer.

Verify and Document

- ~~Outside air~~Outdoor air damper closes to a minimum position.

- Return air damper opens to normal operating position when the system is not in economizer mode.

- Mechanical cooling remains enabled to satisfy discharge air temperature setpoint.

DRAFT

Step 3: Return system back to normal operating condition.

Ensure all schedules, setpoints, operating conditions, and control parameters are placed back at their initial conditions.

DRAFT

8.6.9 NJ.5.1 Air Distribution Acceptance

At-a-Glance

Distribution Acceptance MECH-5-A
Test
his test is to verify all duct work associated with all non-exempt constant volume, single-zone, HVAC units at pumps, and furnaces) meet the material, installation, and insulation R-values per §124(a) requirements nstruction materials, installation, insulation R-values, and that duct leakage does not exceed the maximum on per §144(k) for new duct systems or §149(b)1D for existing duct systems. Standard this test is only required for single-zone units serving 5,000 ft^2 of space or less where 25% or e area is in one of the following spaces: here the U-factor of the roof is greater than the U-factor of the ceiling, or th fixed vents or openings to the outside or unconditioned spaces, or r , this test applies to both new duct systems and to existing duct systems which are either being extended ng system is altered by the installation or replacement of space conditioning equipment including: andler; outdoor condensing unit of a split system air conditioner or heat pump; cooling or heating coil; or nger. Existing duct systems do not have to be tested if they are insulated or sealed with asbestos.
n
his test will require measuring airflow. Equipment used: ated orifice used to pressurize the ducts) accuracy within 3% of measured flow. Contact CalCerts, CBPCA, equipment. r) accuracy within 0.2 Pascals. s must be verified by a certified HERS rating agency certified by the California Energy Commission. There pany's that certify HERS raters. They can be found at http://www.CalCerts.com, http://www.CBPCA.org/ or g.
s
tion all ductwork must be accessible for visual inspection. Hence, visual inspection must be performed d. grilles should be in place before performing the fan flow test to ensure system depicts normal operating esting must occur after visual inspection and installation of the diffusers. ust be installed and ready for system operation, including completion of all start-up procedures, per nendations.
ete
ection: 0.5 to 2 hours (depending on duct access for visual inspections and availability of construction — i.e. cut sheets, etc.) 3 to 6 hours (depending on how long it takes to seal all supply diffusers and return grills and whether total ured rather than calculated)
iteria

DRAFT

~~e not constricted in any way.~~ ~~either stainless steel worm-drive hose clamps or UV-resistant nylon duct ties. Joints and seams are not k rubber adhesive tape unless used in combination with mastic and drawbands.~~ ~~mply with Standards and insulation is protected from damage per Standards.~~ ~~tems, the leakage fraction for the HVAC duct system does not exceed 6%, where the leakage fraction is otal measured leakage flow rate by the total fan system flow rate.~~ ~~systems (covered by Standard Sections 149b1(D or E), the leakage fraction for the HVAC duct system 15% or leakage is reduced by a 60%. The leakage fraction is calculated by dividing total measured e total fan system flow rate.~~ ~~insulation and leakage verified by a Home Energy Rating System (HERS) rater.~~
~~s and Cautions~~
~~e applied to existing duct systems that are having alterations made to the ducts or the HVAC equipment est the system leakage before making the alterations.~~ ~~supply and return diffusers/grills are sealed tightly, all access panels are in place, and duct ends are sealed esting.~~ ~~member to remove all blockages from the supply and return ducts (i.e., where the supply and return ducts at nked off). Seal any holes drilled in the supply and return ducts for the static pressure probes.~~ ~~California HERS rater must also verify duct leakage performance, it may be prudent to coordinate this test that the HERS rater can witness/verify the test simultaneously.~~

~~1..1Test Procedure: NJ.5.1 Air Distribution Acceptance, Use Form MECH-5-A~~

DRAFT

~~***Scope of the Requirements***~~

~~This test only applies to single-zone units serving 5,000 ft^2 of space or less where 25% or more of the duct surface area is in one of the following spaces:~~

- ~~Outdoors, or~~
- ~~In a space directly under a roof where the U-factor of the roof is greater than the U-factor of the ceiling, or~~
- ~~In a space directly under a roof with fixed vents or openings to the outside or unconditioned spaces, or~~
- ~~In an unconditioned crawlspace; or~~
- ~~In other unconditioned spaces~~

~~Within this criteria, this test applies to both new duct systems and to existing duct systems which are either being extended or the space conditioning system is altered by the installation or replacement of space conditioning equipment including: replacement of the air handler; outdoor condensing unit of a split system air conditioner or heat pump; cooling or heating coil; or the furnace heat exchanger. Existing duct systems do not have to be tested if they are insulated or sealed with asbestos.~~

~~***Purpose (Intent) of Test***~~

~~The duct work of these small single-zone systems with ducts in unconditioned spaces must meet the requirements of §144(k) for duct leakage and new duct systems must meet the requirements of §124 including construction materials, installation, and insulation R-values.~~

~~***Construction Inspection***~~

~~The first component of the construction inspection is to assure that the duct system falls under the scope this test (see above *Scope of the Requirements*). Most of the rest of the construction inspection applies to new duct systems. For existing duct system the purpose of this test is to assure the ducts do not leak excessively and do not require that existing ducts~~

have to be brought up to current standards in terms of insulation, or requirements for fasteners. Perform a brief review of the drawings and construction to verify that the following items are specified in the construction set and installed in the field. A comprehensive review of each duct is not required.

- Drawbands are either stainless steel worm-drive hose clamps or UV-resistant nylon duct ties. Verify compliance by reviewing material cut sheets and visual inspection.
- Flexible ducts are not constricted in any way. For example, ensure the flex duct is not compressed against immovable objects, squeezed through openings, or contorted into extreme configurations (i.e., 180° angles). Flex duct that is constricted can increase system static pressure as well as compromise insulation values. Verify compliance through visual inspection.
- Duct leakage tests shall be performed before access to ductwork and associated connections are blocked by permanently installed construction material. The intent here is to ensure construction modifications can be made, if necessary, before access to the ductwork is restricted.
- Joints and seams are not sealed with a cloth-back rubber adhesive tape unless used in combination with mastic and drawbands. Verify compliance through visual inspection.
- Duct R-values are verified. Duct insulation R-value shall comply with §124(a), 124(c), and 124(d), and can be verified by reviewing material cut sheets and through visual inspection.
- Insulation is protected from damage per §124(f). Verify compliance by reviewing material cut sheets and through visual inspection.

Equipment Testing

Refer to the Scope section above for where this test is required. Where it is required the test will often be conducted by the installer and verified by a HERS rater using the procedures outlined in the Nonresidential ACM Manual, Appendix NG, Section 4.3.8.2 and documented on compliance form, MECH-5-A.

The primary metric calculated is the leakage fraction of **total fan flow**. Total fan flow is based on the cooling capacity of heating and cooling equipment and based on the heating capacity of heating only equipment. Total fan flow is determined to be 400 cfm/ton for cooling or heating and cooling equipment where a ton of cooling capacity is equal to 12 kBtu/h of cooling capacity. . For heating only equipment, total fan flow is 21.77 cfm per kBtu. The cooling and heating capacity of equipment can be found on the product nameplate.

For new duct systems, the installer blocks off all of the supply and return registers or diffusers and pressurizes the ducts with a fan flowmeter to 25 Pascals (Pa) and records the leakage airflow measured by the fan flowmeter. This leakage amount at 25 Pa is divided by the total fan flow for the leakage percentage. If this leakage percentage is less than or equal to 6%, the system passes. If the system does not pass, then the installer should look of all accessible leaks and seal any gaps. It is easier to find leaks with the ducts pressurized as one can often feel the air escaping from larger gaps.

For existing duct systems that are having additional ducts added or are having major repairs or replacement of equipment connected to the ducts, the leakage rate of the existing duct system should be tested first before any alterations proceed. This leakage amount is the **Pre-test** leakage value. After the additional ducts or equipment repairs or replacements conducted, then the ducts are sealed along any fittings or joints. After blocking off all supply and return registers or diffusers, the ducts are then pressurized using a fan flowmeter to 25 Pascals (Pa) and the fan flowmeter measures the **final test** leakage rate at 25 Pa. This final test leakage amount at 25 Pa is divided by the total fan flow for the leakage percentage. If this leakage percentage is less than or equal to 15%, the system passes. If the system does not pass, then the installer should look of all accessible leaks and seal any gaps. It is easier to find leaks with the ducts pressurized as one can often feel the air escaping from larger gaps.

If after all accessible leaks are sealed, the leakage percentage is still above 15%, the installer has two options:

DRAFT

If the final test leakage is 60% lower than the pre-test leakage rate and a visual inspection finds no accessible leaks, crushed ducts, animal infestation, rusted ducts etc., this will be sufficient to pass this requirement.

If the system meets neither the 15% leakage percentage nor was it possible to reduce the pre-tested leakage value by 60%, then the system must pass a visual inspection by a HERS rater. Unlike the other methods of compliance this method cannot be sampled – every system must be inspected by the HERS rater.

After completing the air distribution acceptance test, the installer shall affix a sticker to the air handler access door describing if the system met the prescriptive leakage requirements (6% leakage for new systems and 15% for existing systems or if the system) or if the system failed to meet this standard but that all accessible leaks were sealed. The installer supplies the stickers and can have their company logo on them. However, the following information must be on the sticker in 14 pt font or larger.

Document management

After conducting the air distribution acceptance test, the installer will contact the HERS rater so that the results can be validated. The *Construction Inspection* and the *Installer Certification* portion of MECH-5-A will be sent to the HERS Provider, the Builder (General Contractor or Construction Manager), the Building Owner at Occupancy and the Building Department.

The HERS rater will validate the results by filling out the HERS Rater Compliance Statement portion of MECH-5-A and send copies to the Builder (General Contractor or Construction Manager), the Building Owner at Occupancy and the Building Department. If the test complies by virtue of the tested leakage (6% for new ducts and 15% for existing ducts) or by virtue of a 60% leakage reduction before the system was repaired or altered, the HERS rater will sample ducts system by installer, having only to sample every one out of seven systems. For existing duct systems that fail both the 15% leakage rate and the 60% reduction in leakage, the HERS rater will validate all of these systems (100% sampling) by visual inspection.

DRAFT

Reference material from ACM Manual Appendix NJ

Below are excerpts of air distribution acceptance testing requirements from ACM Manual Appendix NG Standard Procedure for Determining the Energy Efficiencies of Single-Zone Nonresidential Air Distribution Systems in Buffer Spaces or Outdoors

NG.4.1 Instrumentation Specifications

The instrumentation for the air distribution diagnostic measurements shall conform to the following specifications:

NG.4.1.1 Pressure Measurements

All pressure measurements shall be measured with measurement systems (i.e. sensor plus data acquisition system) having an accuracy of ± 0.2 Pa. All pressure measurements within the duct system shall be made with static pressure probes.

NG.4.1.2 Duct Leakage Measurements

The measurement of air flows during duct leakage testing shall have an accuracy of ±3% of measured flow using digital gauges.

~~All instrumentation used for duct leakage diagnostic measurements shall be calibrated according to the manufacturer's calibration procedure to conform to the above accuracy requirement. All testers performing diagnostic tests shall obtain evidence from the manufacturer that the equipment meets the accuracy specifications. The evidence shall include equipment model, serial number, the name and signature of the person of the test laboratory verifying the accuracy, and the instrument accuracy. All diagnostic testing equipment is subject to re-calibration when the period of the manufacturer's guaranteed accuracy expires.~~

~~*NG.4.2 Apparatus*~~

~~*NG.4.2.1 Duct Pressurization*~~

~~The apparatus for fan pressurization duct leakage measurements shall consist of a duct pressurization and flow measurement device meeting the specifications in Section NG.4.1.2.~~

~~*NG.4.3.7 Total Fan Flow*~~

~~The total fan flow for an air conditioner or a heat pump for **all climate zones** shall be equal to 400 cfm/rated ton with rated tons defined by unit scheduled capacity at the conditions the unit's ARI rating standard from Section 112 of the Standard. Airflow through heating only furnaces shall be based on 21.7 cfm/kBtuh rated output capacity.~~

~~*NG.4.3.8.2 Diagnostic Duct Leakage*~~

~~Diagnostic duct leakage measurement is used by installers and raters to verify that total leakage meets the criteria for any sealed duct system specified in the compliance documents.~~

California Air Distribution Acceptance (Duct Leakage) Certification

"The leakage of the air distribution ducts was found to be ___CFM @ 25 Pascals or ___% of total fan flow.

This system (check one):

☐ Has a leakage rate that is **equal to or lower** than the prescriptive requirement of 6% leakage for new duct systems or 15% leakage for alterations to existing systems. It meets the prescriptive requirements of California Title 24 Energy Efficiency Standards.

☐ Has a leakage rate **higher than** 6% leakage for new duct systems or 15% leakage for altered existing systems. It does NOT meet the meet or exceed the prescriptive requirements of the Title 24 standards. However, all accessible ducts were sealed.

Signed: _____

Print name: _____

Print Company Name:_____

Print Contractor License No:_____

Print Contractor Phone No:_____

Do not remove sticker

DRAFT

Table NG-3 shows the leakage criteria and test procedures that may be used to demonstrate compliance. In addition to the minimum tests shown, existing duct systems may be tested to show they comply with the criteria for new duct systems.

Table 1-5 – NG-3 Duct Leakage Tests

	on	of total fan flow	
new duct systems	g		
altered existing duct systems	g	akage	
	d Inspection g and Verification	eakage and Visual Inspection	3.7
	d Inspection g and Verification	but All Accessible Ducts are on	3.7

NG.4.3.8.2.1 Total Duct Leakage Test from Fan Pressurization of Ducts

The objective of this procedure is for an installer to determine or a rater to verify the total leakage of a new or altered duct system. The total duct leakage shall be determined by pressurizing both the supply and return ducts to 25 Pascals with all ceiling diffusers/grilles and HVAC equipment installed. When existing ducts are to be altered, this test shall be performed prior to and after duct sealing. The following procedure shall be used for the fan pressurization tests:

- Verify that the air handler, supply and return plenums and all the connectors, transition pieces, duct boots and registers are installed. The entire system shall be included in the test.
- For newly installed or altered ducts, verify that cloth backed rubber adhesive duct tape has not been used.
- Seal all the supply and return registers, except for one return register or the system fan access. Verify that all outside air dampers and /or economizers are sealed prior to pressurizing the system.
- Attach the fan flowmeter device to the duct system at the unsealed register or access door.
- Install a static pressure probe at a supply.
- Adjust the fan flowmeter to produce a 25 Pascal (0.1 in water) pressure difference between the supply duct and the outside or the building space with the entry door open to the outside.
- Record the flow through the flowmeter ($Q_{total,25}$) - this is the total duct leakage flow at 25 Pascals.
- Divide the leakage flow by the total fan flow and convert to a percentage. If the leakage flow percentage is less than 6% for new duct systems or less than 15% for altered duct systems, the system passes.
- Duct systems that have passed this total leakage test will be sampled by a HERS rater to show compliance.

NG 4.3.8.2.2 Leakage Improvement from Fan Pressurization of Ducts

For altered existing duct systems which have a higher leakage percentage than the Total Duct leakage criteria in Section NG 4.3.8.2.1, the objective of this test is to show that the original leakage is reduced through duct sealing as specified in Table NG-3. The following procedure shall be used:

- Use the procedure in NG 4.3.8.2.1 to measure the leakage before commencing duct sealing.
- After sealing is complete use the same procedure to measure the leakage after duct sealing.
- Subtract the sealed leakage from the original leakage and divide the remainder by the original leakage. If the leakage reduction is 60% or greater of the original leakage, the system passes.
- Complete the Visual Inspection specified in NG 4.3.8.2.4.

DRAFT

~~Duct systems that have passed this leakage reduction test and the visual inspection test will be sampled by a HERS rater to show compliance.~~

~~*NG 4.3.8.2.3 Sealing of All Accessible Leaks*~~

~~For altered existing duct systems that do not pass the Total Leakage test (NG 4.3.8.2.1), the objective of this test is to show that all accessible leaks are sealed and that excessively damaged ducts have been replaced. The following procedure shall be used:~~

- ~~Complete each of the leakage tests~~
- ~~Complete the Visual Inspection as specified in NG 4.3.8.2.4.~~

~~All duct systems that could not pass either the total leakage test or the leakage improvement test will be tested by a HERS rater to show compliance. This is a sampling rate of 100%.~~

~~*NG 4.3.8.2.4 Visual Inspection of Accessible Duct Sealing*~~

~~For altered existing duct systems that fail to be sealed to 15% of total fan flow, the objective of this inspection is to confirm that all accessible leaks have been sealed and that excessively damaged ducts have been replaced. The following procedure shall be used:~~

- ~~Visually inspect to verify that the following locations have been sealed:~~
- ~~Connections to plenums and other connections to the forced air unit~~
- ~~Refrigerant line and other penetrations into the forced air unit~~
- ~~Air handler door panel (do not use permanent sealing material, metal tape is acceptable)~~
- ~~Register boots sealed to surrounding material~~
- ~~Connections between lengths of duct, as well as connections to takeoffs, wyes, tees, and splitter boxes.~~
- ~~Visually inspect to verify that portions of the duct system that are excessively damaged have been replaced. Ducts that are considered to be excessively damaged are:~~
- ~~Flex ducts with the vapor barrier split or cracked with a total linear split or crack length greater than 12 inches~~
- ~~Crushed ducts where cross-sectional area is reduced by 30% or more~~
- ~~Metal ducts with rust or corrosion resulting in leaks greater than 2 inches in any dimension~~
- ~~Ducts that have been subject to animal infestation resulting in leaks greater than 2 inches in any dimension~~

DRAFT

~~*NG 4.3.8.4 Labeling requirements for tested systems*~~

1..210.6.12 A sticker shall be affixed to the exterior surface of the air handler access door with the following text in 14 point font: NA7.5.5 Demand ControlDemand-controlled Ventilation Systems Acceptance

ir Distribution Acceptance (Duct Leakage) Certification
- of the air distribution ducts was found to be ___CFM @ 25 Pascals or ___% of total fan

(check one):
age rate that is **equal to or lower** than the prescriptive requirement of 6% leakage for new
6% leakage for alterations to existing systems. It meets the prescriptive requirements of
Energy Efficiency Standards.
:age rate **higher than** 6% leakage for new duct systems or 15% leakage for altered existing
OT meet the meet or exceed the prescriptive requirements of the Title 24 standards.
sible ducts were sealed.
_____
_____
_____
ny Name:_____
tor License No:_____
tor Phone No:_____
_____Do not remove sticker"

At-a-Glance

NJ.8.1NA7.5.5 Demand ControlDemand-controlled Ventilation Systems Acceptance
Use Form MECH-6-A

DRAFT

Purpose of the Test

The purpose of the test is to verify that systems required to employ demand controldemand-Ceontrolled ventilation (refer to §121(c)3) can vary outside ventilation flow rates based on maintaining interior carbon dioxide (CO_2) concentration setpoints. Demand controlDemand-c Controlled ventilation refers to an HVAC system's ability to reduce outside airoutdoor air ventilation flow below design values when the space served is at less than design occupancy. CO_2 is a good indicator of occupancy load and is the basis used for modulating ventilation flow rates.

Instrumentation
To perform the test, it may be necessary to vary and possibly measure (if calibration is necessary) ambient CO_2 levels. The instrumentation needed to perform the task may include, but is not limited to: ~~□~~Hand-held reference CO_2 probe calibrated to +/-10 ppm Calibrated gas
Test Conditions
Equipment installation is complete (including HVAC unit, duct work, sensors, and control system). HVAC system must be ready for system operation, including completion of all start-up procedures per manufacturer's recommendations. Building automation system (BAS) programming (if applicable) for the air handler and ~~demand control~~demand Controlled ~~-controlled~~ ventilation strategy must be complete. To perform the test, it may be necessary to use BAS to override or temporarily modify the CO_2 sensor reading. Air~~-Side~~ Economizer is disabled so that it will not interfere with ~~outside air~~outdoor air damper operation during test. Document the initial conditions before overrides or manipulation of the settings. All systems must be returned to normal at the end of the test.
~~Time to Complete~~Estimated Time to Complete
Construction inspection: 0.5 to 1 hours (depending on CO_2 sensor calibration) **~~Equipment testing~~Functional testing**: 1 to 2 hours (depending on how ambient CO_2 concentration levels are manipulated, system response time to variations in CO_2)
Acceptance Criteria
Each CO_2 sensor is factory calibrated (with calibration certificate) or field calibrated. Each CO_2 sensor is wired correctly to the controls to ensure proper control of the outdoor air damper. Each CO_2 sensor is located correctly within the space 1 to 6 feet above the floor. Interior CO_2 concentration setpoint is ≤600 ppm plus ~~outside air~~outdoor air CO_2 value if dynamically measured or ≤1000 ppm if no OSA sensor is provided. A minimum OSA setting is provided whenever the system is in Occupied mode per Standard §121(c)4E regardless of space CO_2 readings. A maximum OSA damper position for DCV control can be established per the exception to §121(c)4C, regardless of space CO_2 readings. The ~~outside air~~outdoor air damper modulates open when the CO_2 concentration within the space exceeds setpoint, The ~~outside air~~outdoor air damper modulates closed (toward minimum position) when the CO_2 concentration within the space is below setpoint.

DRAFT

Potential Issues and Cautions
Lock out the economizer control during the test. ~~Outside air~~Outdoor air damper may not modulate correctly if the economizer control strategy is controlling damper operation.
Overall test time may be reduced (especially for rooftop HVAC units) if two people perform the test - one to vary the CO_2 concentration while someone else verifies operation of the ~~outside air~~outdoor air dampers.
During the testing of the DCV controls, the outside damper will modulate open.~~.~~ Care should be taken to prevent freezing of coils when testing with cold temperatures outside.

~~1..3~~10.6.13 Test Procedure: ~~NJ.8.1~~NA7.5.5 ~~Demand Control~~Demand-~~c~~ Controlled Ventilation Systems Acceptance, Use Form MECH-6-A

Test Comments and Applicability

The Standards require that only HVAC systems with the following characteristics must employ ~~demand control~~demand-~~c~~ Controlled ventilation:

- ~~-~~Single-zone systems. The intent was to limit the ~~demand control~~demand-~~c~~ Controlled ventilation requirement to systems that primarily serve spaces with variable occupancy. Keep in mind, however, that it is possible that a facility may have a majority of spaces with fixed occupancy and only a few variable occupancy zones that meet the requirement, but still must implement ~~demand control~~demand-~~c~~ Controlled ventilation for those variable occupancy zones. Single-zone HVAC systems can include, but are not limited to: 1) constant volume packaged units with stand-alone economizer controllers (e.g., Honeywell W7340 Logic Module); or 2) constant volume systems with individual dampers/actuators and either stand-alone or centralized DDC control.

- ~~-~~The HVAC system must have an economizer. The reason for this requirement is that the system must have the ability to modulate ~~outside air~~outdoor ~~flow~~air flow.

- ~~-~~Spaces served with specific use types or have the following occupancy densities, as described in the Uniform Building Code (UBC) Chapter 10, must utilize DCV control:

  - Assembly areas, concentrated use (without fixed seating); or
  - Auction rooms; or
  - Assembly areas, less concentrated use; or
  - Occupancy density of 40 square feet per person or less. Occupancy density is calculated using UBC Section 1003.2.2.2.2 for spaces without fixed seating and UBC Section 1003.2.2.2.3 for spaces with fixed seating. However, classrooms are exempt from the

DRAFT

~~demand control~~demand-~~c~~ Controlled ventilation requirement.

The Standards state that the system will maintain a minimum ventilation flow rate no less than the value calculated per §121(c)4.E. ~~This doesn't necessarily require that the system deliver less than design minimum, but it can if §121(c)4.E. is satisfied.~~

Construction Inspection

- ~~□~~The CO_2 sensor is located within the control zone(s) between ~~1~~ 3 ft and 6 ft above the floor or at the anticipated level of the occupant's heads. This is the critical range for measuring CO_2 since most occupants will be typically either sitting or standing within the space.

- ~~□~~CO_2 sensor is either factory calibrated or field calibrated. A calibration certificate from the manufacturer will satisfy this requirement. In order to perform a field calibration check, follow the calibration procedures provided by the manufacturer. Some sensor manufacturers may require using equipment-specific calibration kits (kits may include trace gas samples and other hand-held devices) whereas others may be calibrated simply by using a pre-calibrated hand-held CO_2 measuring device and making proper adjustments through the sensor or ventilation controller.

- ~~□Sensor is wired correctly to the controls to ensure proper control of the outdoor air damper. For stand-alone economizer controller/actuators, this means that the CO2 sensor lead wires are landed on the proper terminals and sensor polarity is correct. For DDC controlled systems, ensure CO_2 sensor value is being read – this will ensure that the sensor is connected to the DDC control panel correctly.~~

- ~~□~~Interior CO_2 concentration setpoint is ≤ 600 ppm plus ~~outside air~~outdoor air CO_2 value if outside concentration is measured dynamically. Else setpoint is ≤ 1000 ppm. ~~Outside air~~Outdoor air CO_2 concentration can be determined by three methods: 1) assume a value of 400 ppm without any direct measurement; 2) measure outside concentration dynamically to continually adjust interior concentration setpoint; or 3) measure outside concentration one time during system checkout and use this value continually to determine inside concentration setpoint.

DRAFT

~~Equipment Testing~~Functional Testing

Step 1: ~~Defeat~~ Disable the economizer.

~~Defeating~~ Disabling the economizer will prevent the ~~outside air~~outdoor air damper from modulating during the test due to atmospheric conditions rather than CO_2 variations. The economizer can be ~~defeated~~ disabled in a number of ways depending on the control strategy used to modulate the ~~outside air~~outdoor air ~~dampers,~~dampers; however the simplest method would be to change the economizer changeover setpoint below current atmospheric conditions. The

changeover setpoint is the value that will lock out the economizer, example control strategies include:

- ~~Outside air~~Outdoor air dry-bulb temperature or enthalpy.

- Comparison between outside and return air temperature or enthalpy.

Step 2: Simulate a high space ~~CO_2 load~~occupancy.

The intent of this test is to ensure the ~~outside air~~outdoor air damper modulates open when the CO_2 concentration within the space exceeds setpoint. Simulating a high ~~CO_2~~ space ~~load~~ occupancy can be accomplished by, but not limited to: 1) commanding the setpoint value to be slightly below current concentration level; or 2) exposing the sensor to a known concentration of source gas (i.e. canister of CO_2 gas with a concentration greater than setpoint). ~~or 3) exposing the sensor to an unknown concentration (i.e. breathing excessively onto the sensor – human breath will provide a very high concentration of CO_2).~~ In all cases you should endeavor to simulate a condition just slightly above the current CO_2 ~~Regardless~~ setpoint. Regardless of the method used to simulate a high CO_2 load, ensure the condition persists long enough for the HVAC system to respond.

Verify and Document

Ensure the ~~outside air~~outdoor air damper modulates open. If the CO2 setpoint is lowered just below current concentration levels, the ~~outside air~~outdoor air damper will modulate open and the increased ~~outside air~~outdoor air should bring interior concentrations down to meet and maintain the new setpoint. If a known concentration of CO2 gas was used to simulate an elevated concentration, then the ~~outside air~~outdoor air damper may modulate fully open since the "measured" concentration will not be influenced by the increase in ~~outside air~~outdoor air (Note that §121(c)4~~.~~C states that outdoor ventilation rate is not required to exceed design minimum value calculated in §121(b)2, regardless of CO2 concentration. Therefore, the ~~outside air~~outdoor air damper may only open to a position that provides the design minimum flow rate). If an unknown concentration was used to simulate a high load, then the ~~outside air~~outdoor air damper could modulate open and closed since the "measured" concentration may vary considerably throughout the test.

Step 3: Simulate a low occupant density~~CO_2 load~~.

The intent of this test is to ensure the ~~outside air~~outdoor air damper modulates towards minimum position when the CO_2 concentration within the space is below setpoint. Eventually the ~~outside air~~outdoor air damper should close to a position that provides minimum ventilation flow rate per §121(c)4~~.~~E, regardless of how far the measured interior concentration is below setpoint. Simulating a low occupant density ~~CO_2 load~~ can be accomplished by, but not limited to: 1) commanding the setpoint value to be ~~slightly~~ significantly higher than current concentration level; 2) exposing the sensor to a known concentration of source gas (i.e. canister of CO_2 gas with a concentration less than setpoint); or open doors and windows to reduce CO_2 concentration in the space. In each case you want the CO_2~~.~~ reading to be well below the setpoint. R~~R~~egardless of the

DRAFT

method used to simulate a low occupant density~~CO_2 load~~, ensure the condition persists long enough for the HVAC system to respond.

Verify and Document

Ensure the ~~outside air~~outdoor air damper modulates towards minimum position. If setpoint is raised just above current concentration levels, the ~~outside air~~outdoor air damper will modulate closed and the reduced ~~outside air~~outdoor air should bring interior concentrations up to meet and maintain the new setpoint. If necessary, continue to adjust the setpoint upward until the ~~outside air~~outdoor air damper closes to a minimum position. If a known concentration of CO_2 gas was used to simulate a lowered concentration, then the ~~outside air~~outdoor air damper will most likely modulate to minimum position since the "measured" concentration will not be influenced by the decrease in ~~outside air~~outdoor air.

Step 4: Return system back to normal operating condition.

Ensure all schedules, setpoints, operating conditions, and control parameters are placed back at their initial conditions.

~~1.~~410.6.14 ~~NJ.9.1~~NA7.5.6 Supply Fan Variable Flow Controls Acceptance

DRAFT

At-a-Glance

~~NJ.9.1~~NA7.5.6 Supply Fan Variable Flow Controls Acceptance Use Form MECH-7-A
Purpose of the Test
The purpose of the test is to ensure that the supply fan in a variable air volume application modulates to meet system airflow demand. In most applications, the individual variable air valve (VAV) boxes serving each space will modulate the amount of air delivered to the space based on heating and cooling requirements. As a result, the total supply airflow provided by the central air handling unit must also vary to maintain sufficient airflow through each VAV box. Airflow is typically controlled using a variable frequency drive (VFD) to modulate supply fan speed and vary system airflow. The most common strategy for controlling the VFD is to measure and maintain static pressure within the duct. Related acceptance tests for these systems include the following: ~~NJ.3.1~~NA7.5.1.1 Variable Air Volume Systems Outdoor Air Acceptance

Instrumentation
The instrumentation needed to perform the task may include, but is not limited to: ☐Differential pressure gauge If applicable, supply air temperature reset should be disabled during testing to prevent any unwanted interaction. All systems and components must be installed and ready for system operation, including: ☐Duct work ☐VAV boxes ☐Static pressure sensor(s) (note multiple sensors with separate control loops are often used on large systems with multiple branches) ☐Electrical power to air handling unit ☐Air handling unit start-up procedures are complete, per manufacturer's recommendations

Test Conditions
BAS programming for the operation of the air handling unit and VAV boxes must be complete, including but not limited to: ☐Supply fan VFD control VAV box control (including zone temperature sensors and maximum/minimum flow rates) Before testing, ensure all schedules, setpoints, operating conditions, and control parameters are documented. All systems must be returned to normal at the end of the test. ☐This test can and should be performed in conjunction with ~~NJ.3.1~~NA7.5.1.1 **Variable Air Volume Systems Outdoor Air Acceptance** test procedures.
~~Time to Complete~~Estimated Time to Complete
Construction inspection: 0.5 to 1.5 hours (depending on sensor calibration and minimum VFD speed verification) ~~Equipment testing~~Functional testing: 1 to 2 hours (depending on how total fan power at design airflow is determined and system control stability)

DRAFT

Acceptance Criteria
Static pressure sensor(s) is factory calibrated (with calibration certificate) or field calibrated. For systems without DDC controls to the zone level the pressure sensor setpoint is less than 1/3 of the supply fan design static pressure. For systems with DDC controls with VAV boxes reporting to the central control panel, the pressure setpoint is reset by zone demand (box damper position or a trim and respond algorithm). At full flow: Supply fan maintains discharge static pressure within ±10% of the current operating control static pressure setpoint Supply fan controls ~~speed~~ stabilizes within ~~1~~5 minute~~s~~ period. At minimum flow (at least 30% of total design flow): ~~VFD reduces supply fan speed to meet flow conditions~~Supply fan controls modulate to decrease capacity. ~~Supply fan maintains discharge static pressure within ±10% of control static pressure setpoint~~ ~~Control static pressure setpoint at minimum flow is no greater than control static pressure setpoint at full flow.~~ Current operating setpoint has decreased (for systems with DDC to the zone level) Supply fan maintains discharge static pressure within +/- 10% of the current operating setpoint. ~~System operation stabilizes within 15 minutes~~
Potential Issues and Cautions
Ensure that all disabled reset sequences are enabled upon completion of this test. Coordinate test procedures with the controls contractor since they may be needed to assist with manipulation of the BAS to achieve the desired operating conditions.

DRAFT

~~1..5~~10.6.15 Test Procedure: ~~NJ.9.1~~NA7.5.6 Supply Fan Variable Flow Controls Acceptance, Use Form MECH-7-A

Construction Inspection

- ☐ Discharge static pressure sensor is factory calibrated or field calibrated. Calibration certificates from the manufacturer are acceptable. Performing a field calibration check requires measuring static pressure as close to the existing sensor as possible using a calibrated hand-held measuring device and comparing the field measured value to the value measured by the BAS (building automation system). If the value measured by the BAS is within 10% of the field-measured value, the sensor is considered calibrated.

~~Equipment Testing~~Functional Testing

- ☐ Supply air temperature reset should be disabled during testing to prevent any unwanted interaction.

Step 1: Drive all VAV boxes to achieve full airflow.

The intent is to verify proper supply fan operation at or near full flow condition. This typically occurs when all of the VAV boxes are operating at maximum cooling flow rate. There are a variety of ways to force the VAV boxes to a maximum cooling position depending on the building automation system capabilities and control strategies used, for example:

- ☐ Command all VAV boxes to maximum flow position (may be accomplished by a global command or it may have to be done per individual box or zone thermostat).

- ☐ Space temperature setpoint can be lowered below current space conditions to force the VAV box into maximum cooling (may be accomplished by a global command or it may have to be done per individual box or zone thermostat).

For this test, you cannot simply adjust the fan VFD to a maximum speed since the purpose of the test is to show the stability of the pressure control loop that automatically controls the fan speed. The fan speed must be in AUTO to discern this.

Verify and Document

- ☐ Supply fan maintains discharge static pressure setpoint within ±10% of the current operating set point.. Verification can be accomplished by simply reading the value measured by calibrated pressure sensor and comparing it to setpoint.

- ☐ System operation stabilizes within ~~1~~5 minutes. The intent is to ensure the PID control loops are tuned properly so that the system does not hunt.

DRAFT

Step 2: Drive all VAV boxes to ~~the greater of the minimum airflow or 30% of total design airflow~~a low airflow condition.

The intent is to verify proper supply fan operation when the system is at or near minimum flow conditions. This typically occurs when all of the VAV boxes are operating at minimum cooling flow rate. There are a variety of ways to force the VAV boxes to a minimum position depending on the building automation system capabilities and control strategies used, for example:

- ☐ Command all VAV boxes to minimum flow position (may be accomplished by a global command or it may have to be done per individual box).

- ☐ Set maximum flow setpoint to be the same as minimum flow setpoint (may be accomplished by a global command or it may have to be done per individual box).

- ☐ Space temperature setpoint can be raised above current space conditions to force the VAV box into minimum cooling or heating mode (may be accomplished by a global command or it may have to be done per individual box or per zone thermostat).

Again, you cannot simply override the VFD as it would negate the purpose of the test.

Verify and Document

- ☐ VFD reduces supply fan speed to meet flow conditions.

- ☐ Supply fan maintains discharge static pressure setpoint within ±10% of the current operating set point. Verification can be accomplished by simply reading the value measured by calibrated pressure sensor and comparing it to setpoint.

- ☐ System operation stabilizes within ~~1~~5 minutes. The intent is to ensure the PID control loops are tuned properly so that the system does not hunt.

Step 3: Return system back to normal operating condition. Ensure all schedules, setpoints, operating conditions, and control parameters are placed back at their initial conditions.

DRAFT

~~1..6~~10.6.16 ~~NJ.10.1~~NA7.5.7 ~~Variable Hydronic Flow Controls Acceptance~~Valve Leakage Acceptance~~Test~~

At-a-Glance

~~NJ.10.1~~NA7.5.7 ~~Variable (Hydronic) Flow Controls Acceptance~~Valve Leakage Acceptance ~~Test~~ Use Form MECH-8~~-~~A
Purpose of the Test
The purpose of this test is to ensure that ~~all chilled or heating water configurations with more than 3 control valves are designed and operated so that total system flow changes as load requirements fluctuate, i.e., the design incorporates two-way control valves at some if not all of the coils. A cooling and heating load is typically met by modulating the amount of water that flows through the respective coil using a control valve. The Standards require that total system flow rate vary as a function of load; that is, the flow rate should decrease when the system calls for less than design flow.~~control valves serving variable flow systems are designed to withstand the pump pressure over the full range of operation. Valves with insufficient actuators will lift under certain conditions causing water to leak trough and loss of control. This test applies to the variable flow systems covered by §144(j)1 Chilled and hot-water variable flow systems, §144(j)2 chiller isolation valves, §144(j)3 boiler isolation valves, and §144(j)4 water-cooled air conditioner and hydronic heat pump systems. Related acceptance tests for these systems include the following: ~~NJ.10.2 Automatic Isolation Controls Acceptance~~ ~~NJ.10.5~~NA7.5.9 ~~(Pump)Variable Frequency Drive Controls Acceptance~~Hydronic System Variable Flow Control Acceptance Testing time will be greatly reduced if these acceptance tests are done simultaneously. ~~NOTE: There are two alternative tests applicable to this measure depending on system design: Alternate 1 – with flow measurement and Alternate 2 – without flow measurement. The Acceptance Agent may select either of these two tests to comply.~~
Instrumentation
Performance of this test will require measuring ~~total hydronic system flow rate~~differential pressure across pumps. The instrumentation needed to perform the task may include, but is not limited to: Differential pressure gauge or Handheld hydronic manometer For accurate comparison with the pump curves it is important that you use the taps on the pump casing for these measurements. Taps on the inlet and discharge piping to the pumps will not correlate to the pump curves.

DRAFT

Test Conditions
The whole hydronic system must be complete – all coils, control valves, and pumps installed; all piping is pressure tested, flushed, cleaned, filled with water; BAS controls, if applicable. All equipment start-up procedures are complete, per manufacturer's recommendations. Document the initial conditions before overrides or manipulation of the BAS. All systems must be returned to normal at the end of the test.
~~Time to Complete~~Estimated Time to Complete
Construction inspection: 0.5 to 2 hours (depending on availability of construction documentation and complexity of the system.) **~~Equipment testing~~Functional testing**: ~~1~~ 30 minutes to ~~4~~ 3 hours (depending on the complexity of the system and the number of valves)
Acceptance Criteria
Provisions have been made for variable flow: System has no flow when all coils are closed and the pump is turned on. ~~At minimum flow, system achieves the greater of 1)50% or less design flow; or 2)minimum flow required by equipment manufacturer for proper operation of any unit.~~ ~~On a change in flow, pumps achieve setpoint within 15 minutes without excessive hunting.~~
Potential Issues and Cautions
The ~~Acceptance Agent~~ Acceptance Agent will likely need access to the EMCS during testing Running a pump in a "deadhead" condition (no flow) for more than 5 minutes can damage the pump seals or motor. Care must be taken to set up the test so that the pump only needs to run for 5 minutes or less. If balance valves are used for isolation of three-way valves or pumps, their initial position must be noted prior to using them for shut off of flow so that they can be returned to their initial position at the end of the test.

DRAFT

Scope of test

This test is required for the variable flow systems covered by §144(j)1 Chilled and hot-water variable flow systems, §144(j)2 chiller isolation valves, §144(j)3 boiler isolation valves, and §144(j)4 water-cooled air conditioner and hydronic heat pump systems.~~for hydronic systems with more than 3 automatic control valves, typically systems with more than 3 coils.~~

~~***ALTERNATE 1- With Flow Measurement Test Procedure: NJ.10.1 Variable Hydronic Flow Controls, Use Form MECH-8-A***~~

~~***Construction Inspection***~~

~~Ensure all valve and piping arrangements were installed per the design drawings in order to achieve the desired control. This refers to each heat exchanger or coil having its own two-way control valve, flow measuring devices, if applicable, are located adequately to achieve accurate measurements (i.e. sufficient straight-line piping before and~~

~~after the meter), and the piping arrangements are correct (for example, there may be three-way valves located at one or more of the coils to ensure system minimum flow rates can be achieved).~~

~~***Equipment Testing***~~

~~**Step 1: Open all control valves.** The intent of this test is to ensure that the system operates at design conditions when the system calls for full flow. Opening the control valves can be achieved in a variety of ways, such as: resetting control setpoints so that valves respond accordingly, commanding the valves directly using the DDC control system (i.e. building automation system), or applying a fixed amount of air pressure to an actuator or valve in the case of a pneumatic control system.~~

~~***Verify and Document***~~

- ~~System operation achieves design conditions within ±5%.~~

~~**Step 2: Close control valves.** The intent of this test is to ensure that system flow rate decreases when the system calls for less-than-design flow. This test must only be performed on hydronic systems that are exempt from the variable frequency drive control requirement per §144(j)6. Closing the control valves can be achieved in a variety of ways, examples of which include: resetting control setpoints so that valves respond accordingly; commanding the valves directly using the DDC control system (i.e., building automation system); or applying a fixed amount of air pressure to an actuator or valve in the case of a pneumatic control system.~~

~~***Verify and Document***~~

- ~~The design flow control strategy achieves required flow reductions. §144(j)1 requires that a variable flow system reduce system flow by the greater of: 1) minimum flow required by the equipment manufacturer for proper operation of the unit (i.e. chillers, boilers, etc) or 2) 50% or less of the design system flow rate. This number should be on the plans.~~

- ~~Ensure each control valve closes completely under normal operating pressure. The intent is to make sure that the actuator valve torque requirements are adequate to shut the valve under normal operating system pressure. Verifying complete closure can include, but is not limited to: 1) visually inspect for full valve stem travel and listen for leakage through the valve; 2) flow switches or meters, if installed, do not detect any flow; 3) differential pressure measured across the device (coil, heat exchanger, etc.) is zero; or 4) differential temperature across the device (coil, heat exchanger, etc.) is zero because if the valve were leaking, energy would be either added to or extracted from the fluid flowing through the device.~~

DRAFT

~~**Step 3: Return system back to normal operating condition.** Ensure all schedules, setpoints, operating conditions, and control parameters are placed back at their initial conditions.~~

~~Alternate 2 –~~ No Flow Measurement

- Test Procedure: ~~NJ.10.1~~NA7.5.9 ~~Variable Hydronic Flow Controls Acceptance~~Valve Leakage Test, Use Form MECH-8-A)

Construction Inspection

Collect the pump curve submittal and note the impeller size. This establishes the curve that the pump should be operating on. It is not uncommon to find that a pump shipped with a different impeller even though the correct impeller is indicated on the plate of the pump.

- Ensure all valve and piping arrangements were installed per the design drawings in order to achieve the desired control. This refers to each heat exchanger or coil having its own two-way control valve, flow measuring devices, if applicable, are located adequately to achieve accurate measurements (i.e. sufficient straight-line piping before and after the meter), and the piping arrangements are correct (for example there may be three-way valves located at one or more of the coils to ensure system minimum flow rates can be achieved).

~~Equipment Testing~~Functional Testing

Step 1: Deadhead One Pump. The intent of this test is to establish a baseline pump pressure for use in checking the ability of all valves to close across the system. Use manual isolation or balance valves at the inlet or bypass of all three way valves and close it off. If a balance valve is used mark its current position so that it can be reset after the test.

Isolate one circulation pump and make sure that all chillers or boilers are off. Close off the isolation valve at the pumps discharge and turn the pump on for not more than 5 minutes. Measure and note the pressure across the pump at this "deadhead" condition. If the system is piped primary/secondary make sure this is a secondary pump. At the end of the measurement turn off the pump and open the discharge valve at the pump.

DRAFT

Verify and Document

Step 2: Close control valves. The intent of this test is to ensure that all two-way valves can modulate fully closed and have actuators that can fully close across an operating pump. With the chillers or boiler still off, start the same pump that was used in Step 1 and drive all HX or coil control valves closed. Closing the control valves can be achieved in a variety of ways, examples of which include: resetting control setpoints so that valves respond accordingly; commanding the valves directly using the DDC control system (i.e., building automation system); or applying a fixed amount of air pressure to an actuator or valve in the case of a pneumatic control system. Make sure that the pump operates for no more than 5 minutes in this "deadhead" condition.

Verify and Document

- Ensure each control valve closes completely under normal operating pressure. The intent is to make sure that the actuator-valve torque requirements are adequate to shut the valve under normal operating system pressure. Verifying complete closure shall be done by measuring the pressure across the operating pump. If the pressure is more than 5% less than that previously measured the test fails as one or more valves have not fully closed. Diagnose and fix the problem then retest.

Step 3: Return system back to normal operating condition. Ensure all schedules, setpoints, isolation and balance valves, operating conditions, and control parameters are placed back at their initial conditions.

~~10.1.1 NJ.10.2 Automatic Isolation Controls Acceptance~~

~~At-a-Glance~~

~~solation Controls Acceptance~~ ~~A~~
~~d by central chilled water and heating hot water plants that consist of multiple pieces of equipment that~~ ~~eet total system load. Often, each piece of equipment is sized so that only a particular unit will operate at~~ ~~he performance characteristics of that unit and its ability to serve the load. For example, a 600-ton cooling~~ ~~two 300-ton chillers, with one unit operating when the load is less than 300 tons and both operating to~~ ~~ifyy that each piece of equipment is automatically isolated from the condenser, chilled or hot water flow~~ ~~on; that is, the isolation valves serving each piece of equipment open fully before the equipment is started~~ ~~equipment is turned off. Note for equipment with dedicated pumps and check valves, automatic isolation~~ ~~not required.~~ ~~ese systems include the following:~~ ~~Controls Acceptance~~
~~cessary to verify correct operation of the isolation valves during start-up and shutdown and that the valves~~ ~~e is no instrumentation needed to perform this task.~~
~~with the respective isolation valve, must be installed and started up.~~ ~~t" and "stop" commands for the equipment, then programming of the start/stop sequences and control~~ ~~te.~~ ~~st be complete – all coils, control valves, and pumps installed; all piping is pressure tested, flushed,~~ ~~r; BAS controls, if applicable.~~ ~~before overrides or manipulation of the BAS. All systems must be returned to normal at the end of the test.~~

DRAFT

~~o 1 hours (depending on availability of construction documentation – i.e. plumbing drawings, material cut etc.)~~ ~~**testing**: 0.5 to 1 hours (depending on familiarity with BAS, method employed to verify tight valve closure, n equipment shutdown and valve closure)~~
~~d with the respective equipment opens fully upon start-up and closes fully upon shutdown.~~ ~~hen fully closed.~~
~~**ons**~~
~~l with manipulating the BAS. Therefore, a controls contractor should be on-site to assist with completing quences.~~

~~***Test Procedure: NJ.10.2 Automatic Isolation Controls Acceptance, Use Form MECH-8-A***~~

~~*Construction Inspection*~~

~~Ensure all valve and piping arrangements were installed per the design drawings in order to achieve the desired control. If the pumps are dedicated to the chillers or boilers, each piece of equipment must have its own isolation valve and is mounted in such a manner that process water cannot flow through the equipment when that unit is not operating.~~

~~1.7~~10.6.17 NA7.5.8 Supply Water Temperature Reset Controls Acceptance

At-a-Glance

~~NJ.10.3~~NA7.5.8 Supply Water Temperature Reset Controls Acceptance Use Form MECH-~~8~~9~~-~~A
Purpose of the Test
The intent of the test is to ensure that both the chilled water and hot water supply temperatures are automatically reset based on either building loads or ~~outside air~~outdoor air temperature, as indicated in the control sequences. Many HVAC systems are served by central chilled and heating hot water plants. The supply water operating temperatures must meet peak loads when the system is operating at design conditions. As the loads vary, the supply water temperatures can be adjusted to satisfy the new operating conditions. Typically the chilled water supply temperature can be raised as the cooling load decreases, and heating hot water supply temperature can be lowered as the heating load decreases. This requirement only applies to chilled and hot water systems that are not designed for variable flow and that have a design capacity greater than or equal to 500 MBh (thousand BTU's per hour).

DRAFT

Instrumentation
Performance of this test will require measuring water temperatures as well as possibly air temperatures. The instrumentation needed to perform the task may include, but is not limited to: Hand-held temperature probe
Test Conditions
To perform the test, it may be necessary to use the building automation system (BAS) to manipulate system operation to achieve the desired control. BAS programming for the operation of the chillers, boilers, air handling units, and pumps must be complete, including but not limited to: Supply water temperature control Equipment start-stop control All control sensors installed and calibrated Control loops are tuned All systems must be installed and ready for system operation, including: Chillers, boilers, pumps, air handling units, valves, piping, etc. All piping is pressure tested, flushed, cleaned, and filled with water Control sensors (temperature, humidity, flow, pressure, etc.) Electrical power to all equipment Start-up procedures for all pieces of equipment are complete, per manufacturer's recommendations Document the initial conditions before overrides or manipulation of the BAS. All systems must be returned to normal at the end of the test.
~~Time to Complete~~**Estimated Time to Complete**
Construction inspection: 0.5 to 1 hours (depending on availability of construction documentation (i.e. plumbing drawings, material cut sheets, specifications, etc) as well as sensor calibration.) ~~Equipment testing~~**Functional testing**: 1 to 2 hours (depending on familiarity with BAS, method employed to vary operating parameters, and time interval between control command and system response)
Acceptance Criteria
Supply water temperature sensors are either factory calibrated (with calibration certificates) or field calibrated. Sensor performance complies with specifications. Supply water reset works.

DRAFT

Potential Problems and Cautions
If the heating hot water temperature reset is tested when there is minimal heating load, make sure to test the low end of the reset first (coldest hot water supply temperature). If the hottest supply water temperature is tested first, it could be difficult to dissipate the heat in the hot water loop without artificially creating a heating load. Waiting for a small heating load to dissipate the heat in the loop could add significant time to the test procedure. Where humidity control is required, chilled water supply water reset is not recommended.

Test Procedure: ~~NJ.10.3~~NA7.5.8 Supply Water Temperature Reset Controls Acceptance, Use Form MECH-~~8~~9~~-~~A

Test Comments

The most common control variables used to reset supply water temperature setpoint include, but are not limited to: coil valve position; ~~outside air~~outdoor air temperature; and space conditioning parameters like humidity. Examples of each control strategy are provided below.

- Coil valve position. A central energy management system is used to monitor cooling coil and/or heating coil valve positions to determine when the supply water temperature can be reset. The following example highlights a common heating hot water control strategy, in which all heating coil valve positions (central heating and re-heat coils) are monitored to determine current valve position. If all heating valves are less than 94% open, then the hot water supply temperature will be incrementally lowered until one valve opens to 94% and then the setpoint is maintained. If any valve opens to more than 98% open, then the hot water supply temperature will be incrementally raised and maintained until one valve drops back down to 94% open. A similar control strategy can be used to reset the chilled water supply temperature. The chilled and hot water temperature setpoint values will be determined by the designer and should be available from either the design narrative, specifications, or control drawings.

- ~~Outside air~~Outdoor air temperature. Another very common control strategy is to reset supply water temperature based on ~~outside air~~outdoor air temperature. Depending on the building type, internal loads, and design conditions, the designer may develop a relationship between the chilled and hot water supply temperatures necessary to satisfy building loads at various ~~outside air~~outdoor air temperatures. For example, hot water temperature may be reset linearly between 90°F and 140°F when ~~outside air~~outdoor air temperature is above 50°F and below 35°F, respectively. Actual supply water and ~~outside air~~outdoor air temperatures will be determined by the designer and should be available from either the design narrative, specifications, or control drawings.

- Humidity control. For special applications like hospitals, museums, semiconductor fabrication and laboratories, the cooling coil control may be based on maintaining a constant relative humidity within the space for not only comfort but also indoor air quality and moisture

DRAFT

control (i.e. mold issues). Therefore, the temperature of the chilled water delivered to the coil should be sufficient to remove moisture from the supply air stream and the chilled water temperature can be reset upwards as the latent load decreases. Actual chilled water temperature setpoint reset schedule will be determined by the designer and should be available from either the design narrative, specifications, or control drawings.

Construction Inspection

- Temperature sensors are either factory calibrated or field calibrated. Depending on the control strategy used to reset supply water temperature, sensors can include, but are not limited to: 1) supply water temperature sensor; and ~~outside air~~outdoor air temperature sensor (if used for reset). Calibration certificates from the manufacturer are acceptable. Field calibration requires using either a secondary temperature reference or placing the sensor in a known temperature environment (typically either ice water or a calibrated dry-well bath). When field calibrating temperature sensors, it is recommended that you perform a "through system" calibration that compares the reference reading to the reading at the EMCS front end or inside the controller (e.g. it includes any signal degradation due to wiring and transducer error).

- Sensor locations are adequate to achieve accurate measurements. Water temperature sensors will typically be located in immersion wells on the supply side of each piece of equipment, and the equipment will be controlled accordingly to meet supply temperature setpoint. Location of the ~~outside air~~outdoor air temperature sensor is much more critical. The sensor should not be exposed to direct sun (preferably mounted on a north-facing wall with a protective cover) or any other heat sources like exhaust streams, cooling towers, or generation equipment.

- Sensors comply with specifications. Proper control depends on the installation of good sensors. Review all sensor cut sheets and verify installed sensors meet all performance requirements as detailed in the specifications.

~~Equipment Testing~~Functional Testing

Step 1. Achieve maximum supply water temperature setpoint (coldest for chilled water and warmest for heating water). Manually change the control variable in order to reset supply water temperature. For a valve position control strategy, command at least one coil valve to 100% open. An alternate method would be to adjust discharge air temperature or zone temperature setpoints to drive a valve into a 100% open condition. For an ~~outside air~~outdoor air temperature control strategy, override actual ~~outside air~~outdoor air sensor to exceed maximum water temperature boundary value. For example, if the control strategy calls for 42°F chilled water when ~~outside air~~outdoor air temperature is above 70°F, command the sensor to read 72°F. For a humidity control sequence, command the humidity setpoint to be 5% below actual humidity conditions.

Verify and Document

- ☐ Chilled and/or heating hot water supply temperature setpoint is reset to the appropriate value determined by the designer per the control strategy.

- ☐ Actual supply water temperature changes to meet the new setpoint. It may take a few minutes for the water temperature to change depending on system conditions and equipment operation.

Step 2. Achieve minimum supply water temperature setpoint (warmest for chilled water and coldest for heating water). Manually change the control variable in order to reset supply water temperature. For a valve position control strategy, command all coil valves to only be partially open. Continuing with one of the examples above, if supply water temperature is reset when a valve is less than 94% open, command all valves to be 90% open. An alternate method would be to adjust discharge air temperature or zone temperature setpoints to drive a valve into a partially open condition. For an ~~outside air~~outdoor air temperature control strategy, override actual ~~outside air~~outdoor air sensor to exceed minimum water temperature boundary value. For example, if the control strategy calls for 90°F heating water when ~~outside air~~outdoor air temperature is above 50°F, command the sensor to read 52°F.

Verify and Document

- ☐ Chilled and/or heating hot water supply temperature setpoint is reset to the appropriate value determined by the designer per the control strategy.

- ☐ Actual supply water temperature changes to meet the new setpoint. It may take a few minutes for the water temperature to change depending on system conditions and equipment operation.

DRAFT

Step 3: Return system back to normal operating condition. Ensure all schedules, setpoints, operating conditions, and control parameters are placed back at their initial conditions.

~~10.1.1 NJ.10.4 Water-loop Heat Pump Controls Acceptance~~

~~At-a-Glance~~

~~Heat Pump Controls Acceptance~~ ~~-A~~
~~ms with total loop pump capacity greater than 5 hp, two-way isolation valves are required at each heat ose when the heat pump's compressor has cycled off. This causes the flow through the loop to vary addition, each individual loop pump with a motor greater than 5 hp is required to have a VSD to control mps may ride the pump curve).~~ ~~ese systems include the following:~~ ~~ency Drive Controls Acceptance~~ ~~rmed in conjunction with NJ.10.5 (Pump) Variable Frequency Drive Controls Acceptance test if a VFD is~~ ~~ests for this measure: Alternate 1 – with flow measurement and Alternate 2 – without flow measurement. may select either of the two tests to perform.~~
~~uire measuring total hydronic system flow rate and pump power. The instrumentation needed to perform ut is not limited to:~~
~~system will be used to manipulate system operation to achieve the desired control. At a minimum, the peration of the heat pumps, control valves, and water pumps must be complete, including:~~ ~~ves~~ ~~ling start stop and flow controls~~ ~~nd ready for system operation, including:~~ ~~ilers, pumps, control valves, piping, etc.~~ ~~shed, cleaned, and filled with water~~ ~~low, pressure, etc.)~~ ~~nt~~ ~~es of equipment are complete, per manufacturer's recommendations~~ ~~before overrides or manipulation of the control system. All systems must be returned to normal at the~~
~~hours (depending on the number of heat pumps and the quality of the documentation.)~~ ~~sting: 2 to 4 hours (depending on familiarity with BAS, method employed to vary operating parameters, ight valve closure, VFD test if applicable)~~
~~vings (two-way control valves, sensors)~~

DRAFT

~~ons~~
~~d with manipulating the control system if not familiar with the programming language. Therefore, a uld be on-site to assist with commanding the heat pumps and adjusting system operation.~~

~~***Test Procedure: NJ.10.4 Water-loop Heat Pump Controls Acceptance, Use Form MECH-8-A, (Alternate 1 – with flow measurement)***~~

~~*Test Comments*~~

~~A typical water-loop heat pump system may consist of the following equipment: 1) water-source heat pumps; 2) one or more circulation pumps (possibly with VFDs); 3) cooling tower (used to dissipate excess heat from the loop); and 4) hot water heating unit (used to add heat to the loop as necessary). A common strategy for controlling the circulation pump VFD would be to maintain a constant system pressure, or differential pressure between supply and return, within the water circuit with the greatest pressure drop (typically the most remote heat pump in the loop). This control strategy would require the installation of a differential pressure sensor preferably far down the loop. The boilers and towers may have a by-pass line and primary pumps to ensure minimum loop flow is maintained. If the water-loop circulating pump is controlled by a VFD, the VFD performance tests are executed in NJ10.5 (Pump) Variable Frequency Drive Controls procedures.~~

~~***Construction Inspection***~~

- ~~Ensure all valve and piping arrangements were installed per the design drawings in order to achieve the desired control. This refers to each heat pump having its own two-way control valve and is mounted in such a manner that process water cannot flow through the unit when it is not operating.~~
- ~~Verify all valve and hydronic connection pressure ratings meet specifications. Verification includes reviewing equipment specification cut sheets.~~

DRAFT

~~***Equipment Testing***~~***Functional Testing***

~~**Step 1. Start all heat pumps.** Command all heat pumps to be enabled, which can be accomplished by simply commanding each unit to operate or by adjusting space temperature setpoints to be outside the existing space temperature.~~

~~***Verify and Document***~~

- ~~System operation achieves design conditions within ±5%. All of the two-way control valves should automatically open when the corresponding heat pump is operating, and the system should operate at or near design flow rate.~~

~~**Step 2. Adjust system to test two-way control valves.** Command several heat pumps to be disabled, which can be accomplished by simply commanding each unit OFF or by adjusting space temperature setpoints to be within the existing space temperature.~~

~~***Verify and Document***~~

- ~~For the units commanded OFF, the two-way control valves should automatically close upon compressor shut down.~~
- ~~Ensure each two-way control valve closes completely under normal operating pressure. The intent is to make sure that the actuator-valve torque requirements are adequate to shut the valve under~~

~~normal operating system pressure. Complete closure can be verified if measured system flow has reduced by an amount equivalent to the cumulative flow of the disabled heat pumps.~~

~~Step 3: Return system back to normal operating condition. Ensure all schedules, setpoints, operating conditions, and control parameters are placed back at their initial conditions.~~

~~***Test Procedure: NJ.10.4 Water-loop Heat Pump Controls Acceptance, Use Form MECH-8-A, (Alternate 2 – without flow measurement) Construction Inspection***~~

~~Ensure all valve and piping arrangements were installed per the design drawings in order to achieve the desired control. This refers to each heat pump having its own two-way control valve and is mounted in such a manner that process water cannot flow through the unit when it is not operating.~~

~~***Equipment Testing****Functional Testing*~~

~~**Step 1: Deadhead One Loop Pump.** The intent of this test is to establish a baseline pump pressure for use in checking the ability of all isolation valves to close across the system.~~

~~Isolate one loop pump and make sure that all towers, boilers and heat pumps are off. Close off the isolation valve at the pumps discharge and turn the pump on for not more than 5 minutes. Measure and note the pressure across the pump at this "deadhead" condition. If the system is piped primary/secondary, make sure this is a secondary pump. At the end of the measurement turn off the pump and open the discharge valve at the pump.~~

~~***Verify and Document***~~

~~Note the "deadhead" pressure of the circulation pump. This will be used in the next test.~~

~~**Step 2: Close all heat pump control valves.** Temporarily disable all heat pumps so that their two-way isolation valves close. The intent of this test is to ensure that all two-way valves can modulate fully closed and have actuators that can fully close across an operating pump. With the towers and boilers still off, start the same pump that was used in Step 1. Closing the heat pump isolation valves can be achieved in a variety of ways, examples of which include: resetting all thermostats to put them into the dead band (where no heating or cooling is called for); or commanding the heat pumps directly using the DDC control system (i.e., building automation system). Make sure that the pump operates for no more than 5 minutes in this "deadhead" condition.~~

~~***Verify and Document***~~

~~Ensure each control valve closes completely under normal operating pressure. The intent is to make sure that the actuator-valve torque requirements are adequate to shut the valve under normal operating system pressure. Verifying complete closure shall be done by measuring the pressure across the operating pump. If the pressure is more than 5% less than that previously measured the test fails as one or more valves have not fully closed. Diagnose and fix the problem, then retest.~~

~~**Step 3: Return system back to normal operating condition.** Ensure all schedules, setpoints, isolation and balance valves, operating conditions, and control parameters are placed back at their initial conditions.~~

DRAFT

~~1..8~~10.6.18 NA7.5.9 ~~Pump Variable Frequency Drive Controls Acceptance~~Hydronic System Variable Flow Control Acceptance

At-a-Glance

~~NJ.10.5~~NA7.5.9 ~~(Pump) Variable Frequency Drive Controls Acceptance~~Hydronic System Variable Flow Control Acceptance Use Form MECH-~~8~~10-A
Purpose of the Test
All hydronic variable flow chilled water and water-loop heat pump systems with circulating pumps larger than 5 hp shall vary system flow rate by modulating pump speed using a variable frequency drive (VFD) or equivalent. As the loads within the building fluctuate, control valves should modulate the amount of water passing through each coil and add or remove the desired amount of energy from the air stream to satisfy the load. In the case of water-loop heat pumps, each two-way control valve associated with a heat pump will be closed when that unit is not operating The purpose of the test is to ensure that, as each control valve modulates, the pump variable frequency drive (VFD) responds accordingly to meet system water flow requirements. Note, this is not required on heating hot water systems with variable flow designs or for condensing water serving only water cooled chillers. Related acceptance tests for these systems include the following: ~~NJ.10.1~~NA7.5.7 ~~Variable (Hydronic) Flow Controls Acceptance~~Valve Leakage Test (if applicable) ~~NOTE: There are two possible tests applicable to this measure depending on system design: Alternate 1 – with Flow Meters and Alternate 2 – Without Flow Meters. The person conducting the acceptance test must select one of the two tests to perform depending on system configuration.~~
Instrumentation
The instrumentation needed to perform the task may include, but is not limited to: ~~-~~Differential pressure gauge

DRAFT

Test Conditions
To perform the test, it will be necessary to use the control system to manipulate system operation to achieve the desired control. At a minimum, control system programming for the operation of the central equipment, control valves, and pumps must be complete, including, but not limited to: Equipment start-stop control All control sensors installed and calibrated Control loops are tuned All systems must be installed and ready for system operation, including: Heat pumps, cooling towers, boilers, pumps, control valves, piping, etc. All piping is pressure tested, flushed, cleaned, and filled with water Control sensors (temperature, flow, pressure, etc.) Electrical power to all equipment Start-up procedures for all pieces of equipment are complete, per manufacturer's recommendations Document the initial conditions before overrides or manipulation of the BAS. All systems must be returned to normal at the end of the test.
~~Time to Complete~~Estimated Time to Complete
Construction inspection: 0.5 to 1 hour (depending on availability of construction documentation – i.e. plumbing drawings, material cut sheets, specifications, etc – as well as sensor calibration) ~~Equipment testing~~Functional testing: 2 to 4 hours (depending on familiarity with BAS, method employed to vary operating parameters, verification method for system flow and VFD power)
Acceptance Criteria
Differential pressure sensor is either factory calibrated (with calibration certificates) or field calibrated. Pressure sensor is located at or near the most remote HX or control valve. System controls to the setpoint stably.
Potential Problems and Cautions
Difficulties could be encountered with manipulating the control system if not familiar with the programming language. Therefore, a controls contractor should be on-site to assist with adjusting system operation and overriding controls.

DRAFT

Test Procedure: ***~~NJ.10.5~~NA7.5.9*** ***~~(Pump) Variable Frequency Drive Controls Acceptance~~Hydronic System Variable Flow Control Acceptance~~, comments and construction inspection common to both Alternative 1 (without flow meters) and Alternative 2 (with flow meters)~~***

Test Comments

§144(j)6 permits two general ~~VFD control strategies~~variable flow control strategies: ~~one based on system flow; and the other based on differential system pressure~~supply pressure reset by coil demand for systems with DDC controls to the coil level and fixed pressure setpoint control for all others. ~~The most common control strategy employed to control the pump VFD is to maintain~~

~~constant differential pressure between supply and return within the water circuit with the greatest pressure drop (typically the most remote heat exchanger or coil in the loop). A flow-based control strategy would require either the calculation or direct measurement of system flow in order to control the pump speed effectively. Regardless of the control strategy employed, the intent of the test is to ensure that as each control valve modulates, the pump VFD responds accordingly to meet system water flow requirements.~~

- ~~□~~It is recommended that minimum VFD speed setpoint be verified. If the minimum speed is ~~too low~~below ~~6hz~~6Hz (10%) the pump motor might overheat~~, equipment may not operate correctly~~. However, if the minimum speed is too high, the system will not be allowed to turn down and the full energy savings of the VFD will not be achieved. ~~Guidance for setting minimum speed setpoint is provided below~~To achieve the highest energy savings the minimum speed should be between 6~~-hz~~Hz and 10H~~hz~~ for variable flow systems. It is important to note that this minimum speed can be provided in the EMCS or at the VSD. It should be provided at only one or the other as providing it on both sometimes causes a cumulative minimum that is much larger than the one intended.~~:~~

~~1. The VFD minimum speed setpoint should meet the equipment manufacturer's requirements, including pump motors, hot water heating unit, and cooling tower. Typically most motor manufacturers do not recommend operating for extended periods of time below a designated speed because heat build-up in the motor can adversely effect winding insulation and motor efficiency. Chillers and heating hot water units may also require a specific flow rate through the unit to ensure proper operation. For example, in a primary-only chilled water system, the chiller manufacturer will dictate the minimum flow rate of chilled water through the evaporator.~~

~~2. VFD minimum setpoint should not be below the point where energy use increases. Both the drive and motor efficiencies decrease at reduced load and eventually a point is reached where a continued reduction in load (i.e., speed) results in an increase in energy usage. Depending on the system characteristics and equipment served, other factors may dictate minimum VFD speed (i.e., equipment manufacturer's requirements), but the minimum speed maintained by the VFD should never be set below this power inflection point. Many VFDs can measure and display power usage on its control screen and it is a simple process of reducing system speed and watching power consumption to determine the inflection point. If the VFD cannot measure power, measuring motor amperage would be a good substitute – inflection point is reached when motor amperage starts to increase.~~

Construction Inspection

- ~~□~~Sensor location is adequate to achieve the desired control. System pressure or differential pressure sensor must be located near the most distant heat exchanger or coil. Verify actual sensor location matches design drawings.

- ~~□~~The differential pressure sensor (if applicable) is either factory calibrated or field calibrated. Calibration certificates from the manufacturer are acceptable. Field calibration would require

measuring system pressure, or differential pressure, as close to the existing sensor as possible using a calibrated hand-held measuring device and comparing the field measured value to the value measured by the BAS.

Test Procedure: ~~NJ.10.5~~NA7.5.9 ~~(Pump) Variable Frequency Drive Controls Acceptance~~Hydronic System Variable Flow Control Acceptance, Use Form ~~MECH-8-A~~MECH-10-A, ~~(Alternate 1 – for systems without flow meters)~~

It is acceptable to use this method to verify VFD operation even if the control does have a flow meter. This method compares VFD speed and pressure at full and minimum flow. If at minimum flow, VFD speed is decreased and system pressure is no greater than at full flow, the system is compliant.

~~Equipment Testing~~Functional Testing

Step 1. Open ~~all~~ control valves to simulate high demand. ~~Ensure all~~Open control valves ~~are 100%~~ to achieve between 90% to 100% of design flow~~open~~. Opening the control valves can be achieved in a variety of ways, such as: resetting control setpoints so that valves respond accordingly, commanding the valves directly using the DDC control system (i.e., building automation system), or applying a fixed amount of air pressure to an actuator or valve in the case of a pneumatic control system.

Verify and Document

- Make note of VFD output – it should be close to 100% speed
- Record system pressure ~~at loop pressure sensor control point~~as measured by the EMCS or as indicated by a hand held reading at the sensor for non-DDC systems.

Record the system pressure setpoint

The pressure should be within 5% of the setpoint

- System pressure should stabilize within 5 minutes.

DRAFT

Step 2. Close control valves to simulate low demand~~Modulate control valves closed~~. Close coil control valves to achieve less than 50% of the design flow. Closing control valves can be accomplished by simply commanding each valve to a specific position or by adjusting temperature setpoints to be within the existing temperature range.

Verify and Document

Make note of VFD output – it should be well below 50% speed

Record system pressure as measured by the EMCS or as indicated by a hand held reading at the sensor for non-DDC systems.

Record the system pressure setpoint

The pressure should be within 5% of the setpoint

System pressure should stabilize within 5 minutes.

- ~~Spot check to ensure that valves are closed.~~

- ~~As the control valves close, the VFD should reduce pump speed. Reduction in pump speed should be commensurate with the expected decrease in water flow.~~

- ~~Record system pressure at loop pressure sensor control point~~

- ~~System pressure can be no greater at minimum flow than at full flow.~~

- ~~Ensure system operation stabilizes within 5 minutes after initiating a valve closure procedure. The intent is to verify that the VFD control PID loop is tuned properly so that changes in system pressure (differential pressure-based control strategy), or flow (flow-based control strategy) due to valve position do not cause excessive hunting of the VFD to achieve proper system flow.~~

Step 3. Return system back to normal operating condition. Ensure all schedules, setpoints, operating conditions, and control parameters are placed back at their initial conditions.

~~***Test Procedure: NJ.10.5 (Pump) Variable Frequency Drive Controls Acceptance, Use Form MECH-8-A, (Alternate 2 – for systems with flow meters)***~~

~~This test assures that power draw of the VFD and pump at 50% flow is no greater than 30% of power draw at full flow.~~

~~***Equipment Testing***~~***Functional Testing***

~~**Step 1. Open all control valves.** Ensure all control valves are 100% open. Opening the control valves can be achieved in a variety of ways, such as: resetting control setpoints so that valves respond accordingly, commanding the valves directly using the DDC control system (i.e., building automation system), or applying a fixed amount of air pressure to an actuator or valve in the case of a pneumatic control system.~~

DRAFT

~~***Verify and Document***~~

- ~~System operation achieves design conditions within ±5%. All of the two-way control valves should open fully and the system should operate at or near design flow rate. Verifying system flow rate can be accomplished by reading flow measured with installed flow meter.~~

~~**Step 2. Modulate control valves closed.** Closing control valves can be accomplished by simply commanding each valve to a specific position or by adjusting temperature setpoints to be within the existing temperature range.~~

Verify and Document

- Ensure each two-way control valve closes completely under normal operating pressure. The intent is to make sure that the actuator-valve torque requirements are adequate to close the valve under normal operating system pressure. Complete closure can be verifying that the measured system flow has reduced by an amount equivalent to the cumulative flow of the closed coils.
- As the control valves close, the VFD should reduce pump speed. Reduction in pump speed should be commensurate with the expected decrease in water flow.
- Ensure system operation stabilizes within 5 minutes after initiating a valve closure procedure. The intent is to verify that the VFD control PID loop is tuned properly so that changes in system pressure (differential pressure-based control) or flow (flow-based control strategy) due to valve position do not cause excessive hunting of the VFD to achieve proper system flow.

Step 3. Adjust system operation to achieve 50% flow. The intent of this test is to verify pump input power meets the required reduction stipulated in §144(j)6 at 50% design flow. Review all heat exchanger and coil flow rates and vary valve position as necessary to achieve a 50% flow condition.

Verify and Document

- The input power consumption for the pump motor/VFD does not exceed 30% of full-load power at a 50% flow condition. Input power can be verified by reading power (kW) directly from the drive if the system has the capability, or a power meter can be used. Otherwise, measure voltage and amperage at each leg of the VFD, assume a reasonable part-load system power factor, and calculate power based on: 1.73*Voltave*Ampave*power factor. At 30% of full-load power, the power factor may range from 50%-70%. It is preferable to verify power factor using motor manufacturer performance data.
- Note: If there are any large imbalances (±10% or greater for voltage and ±20% or greater for amperage) between each leg, this may be indicative of an electrical system problem which could impact system operation and equipment life.

Step 4. Adjust system operation to verify system minimum flow. There may be situations where the water flow rate required by the heat exchangers or coils could be far less than the minimum flow rate programmed into the VFD (refer to the discussion in the Test Comments section). The intent of this test is to verify the VFD maintains minimum pump speed, regardless of actual flow requirements. To execute this test, command all but a few of the heat exchangers or coils fully closed. The cumulative flow rate through the coils still open should be much less than minimum flow set at the VFD.

Verify and Document

- The VFD maintains pump speed at minimum programmed value.

Step 5: Return system back to normal operating condition. Ensure all schedules, setpoints, operating conditions, and control parameters are placed back at their initial conditions.

DRAFT

10.6.19 NA7.5.10 Automatic Demand Shed Control Acceptance

At-a-Glance

NA7.5.10 Automatic Demand Shed Control Acceptance Use Form MECH-11-A
Purpose of the Test
Starting in 2008, all control systems with DDC to the zone level are required to enable centralized demand shed at non-critical control zones from a single software or hardware point in the system §122(h). Field studies have shown that in typical commercial buildings resetting the zone temperatures up by 2°F to 4°F during on-peak times can reduce the peak electrical cooling demand by as much as 30%. This test is to ensure that the central demand shed sequences have been properly programmed into the DDC system
Instrumentation
The instrumentation needed to perform the task may include, but is not limited to: The front end computer to the DDC system
Test Conditions
To perform the test, it will be necessary to use the control system to manipulate system operation to achieve the desired control. The entire HVAC and control system must be complete to perform this test.
Estimated Time to Complete
Construction inspection: 0.5 hour to review the EMCS programming Functional testing: 0.5 to 1 hour (depending on familiarity with BAS)
Acceptance Criteria
The control system changes the setpoints of non-critical zones on activation of a single central hardware or software point then restores the initial setpoints when the point is released.
Potential Problems and Cautions
Difficulties could be encountered with manipulating the control system if not familiar with the programming language. Therefore, a controls contractor should be on-site to assist with the testing.

DRAFT

Test Procedure: NA7.5.10 Automatic Demand Shed Control Acceptance

Construction Inspection

- Review EMCS programming and note which zones were included and excluded from the demand shed. Typically all zones should be included with the possible exception of:
- Equipment rooms (like telecom or data centers)

- Rooms where precise conditioning is required to protect products or experiments (like art galleries, rare-book storage or laboratories)
- Areas where precise temperature is required for health (like many spaces in hospitals)

- Note the current operating setpoints of a number of non-critical and critical zones. Also note the value for resetting the non-critical zones, and whether this is instantaneous or limited to a rate of change (e.g. 1°F/x mins).

Functional Testing

Step 1. Engage the demand control signal. This can be done by either jumpering the digital contact or simply overriding its ~~condtion~~condition in the EMCS front end. Wait 5-10 minutes to let the changes take effect.

Verify and Document

That the setpoints in the non-critical spaces increase by the proper amount

That the setpoints in the critical spaces do not change

Step 2. Disengage the demand control signal. This can be done by either removing the jumper from the digital contact or simply releasing the override of the point in the EMCS front end. Wait 5-10 minutes to let the changes take effect.

Verify and Document

That the setpoints in the non-critical spaces return to their original setpoint

That the setpoints in the critical spaces do not change

Step 3. Return system back to normal operating condition. Ensure all schedules, setpoints, operating conditions, and control parameters are placed back at their initial conditions.

DRAFT

10.6.20 NA7.5.11 Packaged Unit FDD Controls Acceptance

At-a-Glance

NA7.5.10 Fault Detection and Diagnostics ~~Packaged Unit~~ FDD for Package Direct-Expansion Units ~~Controls~~ Acceptance Use Form MECH-12-A
Purpose of the Test
The purpose of this test is to verify proper fault detection and reporting for automated fault detection and diagnostics systems for packaged units. Automated FDD systems ensure proper equipment operation by identifying and diagnosing common equipment problems such as improper refrigerant charge, low airflow or faulty economizer operation. Qualifying FDD systems receive a compliance credit when using the performance approach. A system that does not meet the eligibility requirements may still be installed, but no compliance credit will be given.
Benefits of the Test
The test ensures that the FDD system can detect and report common faults such as an improper refrigerant charge or a reduction in airflow due to a dirty filter or coil. FDD systems help to maintain equipment efficiency closer to rated conditions over the life of the equipment.
Instrumentation
The system test for refrigerant charge requires no extra sensors, since the unit should be already equipped with suction and liquid line temperature and pressure sensors. The system test for airflow requires a fan flowmeter, flow grid or flow capture hood with accuracy to 7% of full airflow and static pressure transducer with accuracy to +/- 0.2 Pa. Temperature sensor calibration requires a digital thermometer with accuracy of +/- 0.1% of reading + 1.3˚F and resolution to 0.2˚F.
Test Conditions
Packaged unit and thermostat installation and programming must be complete. HVAC system must be installed and ready for system operation, including completion of all start-up procedures, per manufacturer's recommendations. The system operating modes should already have been tested. If the system includes a field-installed air economizer, the economizer should already have been tested per procedures under forms ~~MECH-4-A~~MECH-2A.
Estimated Time to Complete
Construction inspection: 0.5 hour Functional testing: 1 to 2 hours FDD systems can have the capability to report alarms to a remote server, which are then accessible via a Web interface. It may be helpful to have two persons conducting the test – one to perform testing on the unit and a second to verify reporting of the alarm to the remote interface.

DRAFT

Acceptance Criteria
The system is able to detect a low airflow condition and report the fault. The system is able to detect if refrigerant charge is low or high and report the fault.
Potential Problems and Cautions
Compared to the pressure sensors, the temperature sensors can have a longer response time to reach a steady-state condition. Therefore, the FDD algorithms may have trouble working properly during transitional states – for example, when the fan or compressor first turns on. The tester should be aware of the potential for false alarms that may occur during testing. The refrigerant charge test is designed to detect a high or low refrigerant charge. If the charge is acceptable it is not necessary to force a low charge condition by removing refrigerant from the system.

Construction Inspection

To qualify for the automated FDD compliance credit, the system must have the following capabilities:

1. The unit must include a factory-installed economizer, and limit the economizer dead band to no more than 2°F. Field-installed economizers tend to be more prone to problems; factory-installed economizers will prevent the need to additional testing in the field.
2. The unit should include direct-drive actuators on outside air and return air dampers. Direct-drive actuators and gear-driven connections provide greater mechanical reliability than linkage driven systems that can become loose with wear and fall out of adjustment.
3. The unit shall include an integrated economizer with either differential dry-bulb or differential enthalpy control. Differential dry-bulb or enthalpy control provides greater energy savings than a fixed setpoint.
4. The unit shall include a low temperature lockout on the compressor to prevent coil freeze-up or comfort problems. This situation could occur during cold outside air conditions, or if the compressor continues to operate when the outside air temperature falls below 55˚F. If the discharge air temperature falls below an adjustable setpoint (i.e. 40 to 45˚F), the outside air dampers would modulate closed until the supply air temperature reaches the setpoint.
5. Outside air and return air dampers shall have maximum leakage rates conforming to ASHRAE 90.1-2004. Economizers, when fully open, often do not provide 100% outdoor air due to return air leakage. ASHRAE 90.1-2004 requires blade and jamb seals on outside air dampers for economizers. This also ensures that outside air dampers

DRAFT

can close completely during pre-occupancy warm-up or setback periods.

6. The unit shall have an adjustable expansion control device such as a thermostatic expansion valve (TXV). Units equipped with TXVs or electronic expansion valves are more tolerant of changes in refrigerant charge and maintain efficiency over a wider range of charge conditions.
7. To improve the ability to troubleshoot charge and compressor operation, a high-pressure refrigerant port will be located on the liquid line. A low-pressure refrigerant port will be located on the suction line. Subcooling is determined by measuring the liquid line pressure and comparing the saturation temperature to the actual liquid temperature.
8. The following sensors should be permanently installed to monitor system operation and the controller should have the capability of displaying the value of each parameter:
   - Refrigerant suction pressure
   - Refrigerant suction temperature
   - Liquid line pressure
   - Liquid line temperature
   - Outside air temperature
   - Outside air relative humidity
   - Return air temperature
   - Return air relative humidity
   - Supply air temperature
   - Supply air relative humidity.

DRAFT

Having pressure sensors hardwired will eliminate the need to tap into the refrigerant circuit. Permanent temperature measurements will prevent inaccuracies caused by pipe surface measurements when the ambient temperature varies significantly from the refrigerant temperature. Note that the diagnostic techniques used by the FDD controller may eliminate the need for some of the sensors listed above.

9. The controller will provide system status by indicating the following conditions:
   - Compressor enabled
   - Economizer enabled
   - Free cooling available
   - Mixed air low limit cycle active
   - Heating enabled.

The unit controller shall have the capability to manually initiate each operating mode so that the operation of compressors, economizers, fans, and heating system can be independently tested and verified. This will eliminate the need for using jumpers to initiate the different operating modes.

Functional Testing

1. **Test low airflow condition**. Packaged equipment is typically designed to operate in the airflow range of 350 to 400 cfm per ton of cooling. Lower airflows will reduce equipment performance.
    a. Replace the existing filter with a dirty filter or obstruction to reduce the supply airflow. This can be done by either obstructing part of the filter media, or by installing a second filter in series with (in front of) the existing filter.
    b. The system airflow may be tested using (i) supply plenum pressure matching, (ii) a flow grid measurement, or (iii) a flow capture hood measurement at the return grille(s) according to procedures in section 3.3 of Reference Appendix RA3.
        i. For an airflow measurement using supply plenum pressure matching, the apparatus for measuring the system fan flow shall consist of a duct pressurization and flow measurement device (subsequently referred to as a fan flowmeter) meeting the specifications in RA3.3.1, a static pressure transducer meeting the specifications in Section RA3.3.1, and an air barrier between the return duct system and the air handler inlet.
            1. The measuring device shall be attached at the air handler blower compartment door. All registers shall be in their normal operating condition. The static pressure probe shall be fixed, or alternatively at the inlet to a return from the conditioned space. The measuring device shall be attached at a point where all the fan airflow shall flow through it.
            2. When the air handler blower compartment door is used an air barrier must be placed between the return duct system and the air handler inlet(s). All registers shall

DRAFT

be in their normal operating condition.

3. The static pressure probe shall be fixed to the supply plenum at the location specified in Section RA3.3.1.1 of Reference Appendix RA3 so that it is not moved during this test.
4. With the system fan on at the maximum speed used in the installation, measure the pressure difference between the supply plenum and the conditioned space (Psp). Psp is the target pressure to be maintained during the tests.
5. If the fan flowmeter is to be connected to the air handler at the access door, block the return duct system from the plenum upstream of the air handler fan and flowmeter.
6. Attach the fan flowmeter at the air handler access, or alternatively at the inlet to the return from the conditioned space.
7. Turn on the system fan and the fan flowmeter and adjust the flowmeter until the pressure between the supply plenum and conditioned space matches Psp. Record the airflow through the flowmeter in cfm.
8. If the system fan and flowmeter can not produce enough flow to reach Psp, record the maximum flow (Qmax) and pressure (Pmax) between the supply plenum and the conditioned space. Correction of the flowmeter reading to adjust for the difference between the test pressure and operating pressure is made by the following equation:

$$Qah = Qmax \times (Psp/Ptest)^{0.5}$$

Where Psp is the normal operating pressure and Ptest is the static pressure with the flowmeter in place

ii. A flow capture hood may be used to measure airflow at the return register(s). The hood dimensions must be greater than the dimensions of the return grilles for this

DRAFT

test. All registers should be fully open and the air filter should be installed. The flow hood should be calibrated with an accuracy level of 7% of fan flow or better.

iii. A flow grid and static pressure transducer may be used to measure system airflow. The grid should be positioned so that all airflow passes through the flow grid. A static pressure transducer is installed in the supply plenum in the location described in Reference Appendix RA3, section 3.3.1.1. The transducer should have accuracy to +/- 0.2 Pa. Static pressure measurements are taken with and without the flow grid in place. Correction for pressure drop across the flow grid is handled by the following equation:

Qah = Qmax x (Psp/Ptest) ^0.5

Where Psp is the normal operating pressure and Ptest is the static pressure with the flow grid in place

c. Divide the airflow by the nominal tons of the air conditioner. If the measured airflow is at least 10% lower than 350 cfm/ton, verify that the system reports a fault.

d. Restore the filter back to its original condition.

2. **Test refrigerant charge**. Refrigerant charge is commonly tested either through measurements of superheat or subcooling, or by direct weight measurement of the refrigerant. A superheat value that is higher than the design value for the system is an indication of low refrigerant charge. When the charge is low, the refrigerant in the evaporator boils off quickly and the remaining heat is transferred to the gas as superheat. Packaged systems with thermostatic expansion valves are designed to ensure a constant amount of superheat. Too much subcooling is an indication that the system is overcharged. A related indication is a discharge pressure that is too high, especially at high cooling loads.

The refrigerant charge test for systems equipped with thermostatic expansion valves or electronic expansion valves requires measurements of subcooling and superheat. Subcooling and superheat can be determined from suction line and liquid line pressure and temperature sensor readings.

a. Determine the amount of subcooling by taking the difference between the liquid line temperature and the saturation temperature at the liquid line pressure. Subcooling = $T_{condenser,sat} - T_{liquid}$

DRAFT

b. Determine the target subcooling specified by the manufacturer.
c. Calculate the difference between the target subcooling and measured subcooling. If the difference is less than 4˚F, the system passes.
d. If the difference is greater than +4˚F, the charge is too high and the installer should remove refrigerant. If the charge is too high verify that the FDD controller reports a fault.
e. If the difference is less than -4˚F, the charge is too low and the installer should add refrigerant. If the charge is too low, verify that the FDD controller reports a fault.
f. Determine the superheat by taking the difference between the suction line temperature and the saturation temperature at the suction line pressure.
Superheat = $T_{suction} – T_{evaporator,sat}$
g. Determine the target superheat specified by the manufacturer if the information is available.
h. Calculate the difference between the target superheat and measured superheat. If the difference is within the manufacturer's superheat range, the system passes. If manufacturer data is not available, and the superheat is between 3˚F and 30˚F, the system passes.
i. If the superheat is too high verify that the FDD controller reports a low charge fault. If the superheat is too low verify that the FDD controller reports a high charge fault.

DRAFT

3. Calibrate outside air, return air and mixed air temperature sensors.

a. Fill an insulated cup (foam) with crushed ice. The ice shall completely fill the cup. Add water to fill the cup.

b. Insert two sensors into the center of the ice bath and attach them to the digital thermometer.

c. Let the temperatures stabilize. The temperatures should be 32˚F +/- 1˚F. If the temperature is off by more than 1˚F, make corrections according to the manufacturer's instructions. If the temperature is off by more than 2˚F, the sensors should be replaced.

10.6.21 NA7.5.12 FDD for Air Handling Units and Zone Terminal Units Acceptance

At-a-Glance

NA7.5.12 Automatic Fault Detection Diagnostics (FDD) for Air Handling Units and Zone TermU and Zone Terminal Units Acceptance Use Form MECH-13-A
Purpose of the Test
Fault detection and diagnostics can also be used to detect common faults with air handling units and zone terminal units. Many FDD tools are standalone software products that process trend data offline. Maintenance problems with built-up air handlers and variable air volume boxes are often not detected by energy management systems because the required data and analytical tools are not available. Because of the large volume of data requiring analysis it is more practical to perform the FDD analysis within the distributed unit controllers. The acceptance tests are designed to verify that the system detects common faults in air handling units and terminal units. FDD systems for air handling units and zone terminal units require DDC controls to the zone level. Successful completion of this test provides a compliance credit when using the performance approach. An FDD system that does not pass this test may still be installed, but no compliance credit will be given.
Benefits of the Test
The test will ensure that the FDD controls are able to detect and report common faults with air handling units and VAV boxes. Fan power consumption will be reduced due to proper operation of the air handler, as well as VAV boxes that are responding correctly to zone demand requirements. Cooling energy will be reduced due to proper operation of the VAV boxes since a VAV box that is providing too much air to a zone will end up overcooling the zone. This then results in wasted energy on the heating side, since the reheat coil will then need to be activated.
Instrumentation
FDD tests for air handling units and zone terminal units require no additional instrumentation for testing, since control algorithms are embedded in unit controllers.
Test Conditions
The air handling unit should be installed and the heating, cooling and economizer modes of operation tested. To perform the test, it may be necessary to use the building automation system (BAS) to manipulate system operation to achieve the desired control. BAS programming for the operation of the chillers, boilers, air handling units, and pumps must be complete. All equipment startup procedures must have been completed per manufacturer's instructions. All control sensors must be installed and control loops tuned. Document the initial conditions before any overrides to the building automation system.

DRAFT

Estimated Time to Complete
Acceptance tests will take 1-2 hours for each air handler. It may be helpful to have two persons performing this test. Time for acceptance testing for terminal units depends on the number of boxes to be tested.
Acceptance Criteria
The system is able to detect common faults with air handling units, such as a sensor failure, a failed damper or actuator or an improper operating mode. The system is able to detect and report common faults with zone terminal units, such as a failed damper or actuator or a control tuning issue.
Potential Problems and Cautions
Difficulties could be encountered with manipulating the control system if not familiar with the programming language. Therefore, a controls contractor should be on-site to assist with the testing.

Functional Testing

Air Handling Unit Tests

Testing of each AHU with FDD controls shall include the following tests.

1. **Sensor drift/failure**: The threshold for a sensor drift fault should be given in % of full range, or in units for each type of sensor (temperature, differential pressure / airflow rate, etc.) This tests sensor fault by disconnecting the sensor.

Step 1: Disconnect outside air temperature sensor from unit controller.

Step 2: Verify that the FDD system reports a fault.

Step 3: Connect OAT sensor to the unit controller.

Step 4: Verify that FDD indicates normal system operation.

2. **Damper/actuator fault**: this includes a failed actuator, or a damper stuck in an open closed or fixed position.

Step 1: From the control system workstation, command the mixing box dampers to full open. This may be done by lowering the supply air temperature setpoint at the control workstation.

Step 2: Disconnect power to the actuator and verify that a fault is reported at the control workstation.

Step 3: Reconnect power to the actuator and command the mixing box dampers to full open by maintaining the supply air temperature setpoint.

Step 4: Verify that the control system does not report a fault.

Step 5: From the control system workstation, command the mixing box dampers to a minimum position. This may be done by

DRAFT

raising the supply air temperature setpoint at the control workstation.

Step 6: Disconnect power to the actuator and verify that a fault is reported at the control workstation.

Step 7: Reconnect power to the actuator and command the dampers closed.

Step 8: Verify that the control system does not report a fault during normal operation.

3. **Valve/actuator fault**: this test covers faults such as actuator failure, a valve stuck in an open or closed position and valve leaks.

Step 1: From the control system workstation, command the heating coil valve to the full open position. This may be done by temporarily setting the space heating setpoint higher than the current space temperature, if the system is not in heating mode.

Step 2. Disconnect power to the actuator and verify that a fault is reported.

Step 3. Reconnect power to the actuator and command the heating coil valve to full open.

Step 4. Verify that the control system does not report a fault.

Step 5. From the control system workstation, command the cooling coil valve to the full open position. This may be done by temporarily setting the space cooling setpoint lower than the current space temperature, if the system is not in cooling mode.

Step 6. Disconnect power to the actuator and verify that a fault is reported.

Step 7. Reconnect power to the actuator and command the cooling coil valve to full open.

Step 8. Verify that the control system does not report a fault.

4. **Inappropriate heating, mechanical cooling, and/or economizing**: these tests are designed to capture faults when the system is running in an improper mode of operation. (For systems with integrated economizers, economizer and cooling operation can be simultaneously enabled.)

Step 1: From the control system workstation, override the heating coil valve and verify that a fault is reported at the control workstation.

Step 2: From the control system workstation, override the cooling coil valve and verify that a fault is reported at the control workstation.

Step 3: From the control system workstation, override the mixing box dampers and verify that a fault is reported at the control workstation.

DRAFT

Terminal Unit Tests

Testing shall be performed on one of each type of terminal unit (VAV box) in the project. A minimum of 5% of the terminal units shall be tested.

1. **Sensor drift/failure**:

Step 1: Disconnect the tubing to the differential pressure sensor of the VAV box.

Step 2: The system compensates for the zero airflow reading by opening the damper to the full open position. Verify that control system detects and reports the fault.

Step 3: Reconnect the sensor and verify proper sensor operation.

Step 4: Verify that the control system does not report a fault.

2. **Damper/actuator fault**:

(a) Damper stuck open.

Step 1: Command the damper to be fully open. This may be done in a variety of ways, depending on the capabilities of the building automation system. Override the space temperature setpoint to be below the current space temperature to force the system into maximum cooling. Or, command the VAV box to the maximum position through the control workstation.

Step 2: Disconnect the actuator to the damper.

Step 3: Adjust the cooling setpoint so that the room temperature is below the cooling setpoint to command the damper to the minimum position. Verify that the control system reports a fault.

Step 4: Reconnect the actuator and restore to normal operation.

(b) Damper stuck closed.

Step 1: Set the damper to the minimum position.

Step 2: Disconnect the actuator to the damper.

Step 3: Set the cooling setpoint below the room temperature to simulate a call for cooling. Verify that the control system reports a fault.

Step 4: Reconnect the actuator and restore all setpoints to their original values to resume normal operation.

3. **Valve/actuator fault**: this fault could be caused by actuator failure or a valve stuck in an open or closed position. This test is only applicable to systems with hydronic reheat.

Step 1: Command the reheat coil valve to (full) open by setting the heating setpoint temperature above the space temperature setpoint. Wait for the controls to respond to the command to open the reheat coil valve open.

DRAFT

Step 2: Disconnect power to the actuator. Set the heating setpoint temperature to be lower than the current space temperature, to command the valve closed. Verify that the fault is reported at the control workstation.

Step 3: Reconnect the actuator and restore all setpoints to their original values to resume normal operation.

4. **Feedback loop tuning fault**: this test is designed to capture a fault that might occur from excessive hunting or sluggish control.

Step 1: Set the integral coefficient of the box controller (reset action) used for airflow control to a value 50 times the current value. Reduce the space temperature setpoint to be 3˚F below the current space temperature to simulate a call for cooling.

Step 2: The damper cycles continuously over a period of several minutes. (The cycling period time depends on the type of controller used but is typically on the order of a few minutes.) Verify that the control system detects and reports the fault.

Step 3: Reset the integral coefficient of the controller to its original value and reset the space setpoint to its original value to restore normal operation.

5. **Disconnected inlet duct**:

From the control system workstation, command the damper to a minimum position by raising the space temperature setpoint.

Then disconnect power to the actuator and verify that a fault is reported at the control workstation.

Reset the space temperature setpoint back to its original value.

~~1.1210.6.22~~ NA7.5.13 Distributed Energy Storage DX AC System Acceptance

At-a-Glance

NA7.5.13 Distributed Energy Storage DX AC Acceptance Use Form MECH-14-A
Purpose of the Test
This test verifies proper operation of distributed energy storage DX systems. Distributed energy systems reduce peak demand by operating during off peak hours and storing cooling, usually in the form of ice. During peak cooling hours the ice is melted to avoid compressor operation. The system typically consists of a water tank containing refrigerant coils that cool the water and convert it to ice. As with a standard direction expansion (DX) air conditioner, the refrigerant is compressed in a compressor and then cooled in an air-cooled condenser. The liquid refrigerant then is directed through the coils in the water tank to make ice or to air handler coils to cool the building.

DRAFT

Benefits of the Test
The test will ensure that the distributed energy storage system is able to charge the storage tank during off-peak hours and discharge the storage tank during on peak hours to reduce peak demand. Since the DX air conditioner can operate more efficiently at night when ambient temperatures are lower, the system may save cooling energy in some climates.
Instrumentation
Distributed energy storage acceptance tests require no additional instrumentation for testing.
Test Conditions
The DX equipment should be installed and operational. Perform pre-startup installation procedures as specified by the manufacturer. Verify that the building cooling is controlled by a standard indoor HVAC thermostat and not by factory installed controls. Verify that ice making is not controlled by the thermostat. The water tank should be filled to the proper level as specified by the manufacturer prior to the start of the test. All refrigerant piping field connections should be made and the system should be charged with refrigerant.
Estimated Time to Complete
Construction Inspection: 0.5 hours Acceptance Tests: 2 hours
Acceptance Criteria
Verify nighttime ice making operation. Verify that tank discharges during on-peak cooling periods. Verify that the compressor does not run and the tank does not discharge when there is no cooling demand during on-peak periods. Verify that the system does not operate during a morning shoulder period when there is no cooling demand. Verify that the system operates in direct mode (with compressor running) during the morning shoulder time period.
Potential Problems and Cautions
These tests only apply to systems with storage capacity less than 100 ton-hours. Systems with storage above 100 ton-hours should be modeled using the thermal energy storage compliance option. Be sure the water tank is filled to the proper level indicated by the manufacturer prior to the start of the tests. The tests require override of the system controller programming. Be sure to record the system settings prior to the start of the testing, and restore the system settings to their original values upon completion of the tests.

DRAFT

Construction Inspection

The distributed energy storage system third party submittal form should be verified, which contains the following information: testing laboratory, address, phone number, contact person, date tested, tracking number, model number, and manufacturer. The

following performance information should be recorded and reported on the form MECH-14-A:

Model Number (from MECH-1C form)

Maximum Cooling Capacity (Btu/h)

Direct Cooling Capacity (Btu/h)

Direct Cooling EIR (3.413/EER)

Storage Capacity (ton-hours)

Tank UA (Btu/h-F)

Parasitic losses during discharge (kW)

Parasitic losses during charge (kW)

Parasitic losses while idle (kW)

The following control information should be recorded:

Latest Charge Stop Time

Earliest Charge Start Time

First Peak Month/Date – first month or date considered on-peak cooling conditions

Last Peak Month/Date – last month or date considered on-peak cooling conditions

Peak Start Melt Hr – hour when on-peak discharge of the tank begins

Off Peak Start Melt Hr – hour when off-peak discharge of the tank begins

DRAFT

Acceptance Tests

Step 1: **Test nighttime charging mode**. Simulate no demand for cooling by setting the cooling setpoint above the current space temperature, and set the system time to be within the nighttime time period.

If the tank is not full of ice, verify that the system runs and provides charging to the tank and does not provide cooling to the building. Run the system in nighttime charging mode for a minimum of 60 minutes to partially charge the tank. (For the Ice Bear system the tank status may be simulated with a Field Control Box attached to the system controller, following manufacturer's instructions. The pressure simulator switch can be adjusted to read 85 psi to simulate an ice-exhausted condition.)

If the tank is full of ice, verify that the system remains idle (the compressor is off, and no cooling to the building is provided).

Step 2: **Simulate cooling demand during daytime period**. The intent of this test is to verify that during on-peak conditions the tank will discharge and the compressor will remain off.

Set the time clock to on-peak hours (typically between 12 noon and 6 PM), or change the on-peak start time control parameter to be earlier than the current time. Set the space cooling setpoint to be below the current space temperature.

a) If the system has storage of ice, verify that the DES/DXAC runs in ice melt mode and that the compressor remains off. The supply fan operates continuously to provide cooling to the space. The refrigerant pump operates to circulate refrigerant to the evaporator coil(s).

b) If the DES/DXAC system has no ice and there is a call for cooling, verify that the DES/DXAC system runs in direct cooling mode, with the compressor running. Verify that cooling is provided to the space.

Step 3: **Simulate no cooling load during daytime on-peak hours** by setting the cooling setpoint above the current space temperature. Reconfigure the controller to set the time clock to a time between 12 noon and 6 PM to simulate an on-peak cooling period.

Verify that the supply fan operates continuously. Verify that the tank does not discharge and that the compressor remains off.

Step 4: **Simulate no cooling load during the morning shoulder time period** (before noon). Set the space temperature setpoint to be above the current space temperature and set the system time clock to be between the hours of 6AM and noon.

Verify that the DES/DXAC system remains idle.

Step 5: **Simulate a cooling load during the morning shoulder time period** (between 6 am and noon) by setting the space setpoint below the current space temperature.

Verify that the DES/DXAC system runs in direct cooling mode, with the compressor running. Verify that the tank does not discharge during this period.

Set the date and time back to the current date and time after completion of the acceptance tests, following manufacturer's instructions.

DRAFT

10.6.23 NA7.5.14 Thermal Energy Storage System Acceptance

At-a-Glance

NA7.5.14 Thermal Energy Storage System Acceptance Use Form MECH-15-A
Purpose of the Test
This test verifies proper operation of thermal energy storage (TES) systems. TES systems reduce energy consumption during peak demand periods by shifting energy consumption to nighttime. Operation of the thermal energy storage compressor during the night produces cooling energy which is stored in the form of cooled fluid or ice in tanks. During peak cooling hours the thermal storage is used for cooling to prevent the need for chiller operation.
Benefits of the Test
The test will ensure that the TES system is able to charge the storage tank during off-peak hours and discharge the storage tank during on peak hours to reduce peak demand. Since the chiller can operate more efficiently at night when ambient temperatures are lower, the system may save cooling energy in some climates.
Instrumentation
TES acceptance tests require no additional instrumentation for testing.
Test Conditions
The chiller should be installed and operational. The thermal storage tank should be without charge or partially charged (not fully charged) at the start of testing. The system should be configured with an on-peak cooling period (tank discharge) of 12:00pm to 6:00pm and an off-peak charging period of 9:00pm to 9:00am. During 6:00pm to 9:00pm the cooling load can be met by storage if the tank has stored energy available or by compressor cooling if there is no stored energy available. Between 9:00am and 12:00pm the tank does not discharge and the cooling load is met by the compressor only.
Estimated Time to Complete
Construction Inspection: 0.5 hours Acceptance Tests: 2 hours
Acceptance Criteria
Verify that the system is able to charge the storage tank during off-peak periods when there is no cooling load. Verify that tank discharges during on-peak cooling periods. Verify that the compressor does not run and the tank does not discharge when there is no cooling demand during on-peak periods. Verify that the system does not operate during a morning shoulder period when there is no cooling demand. Verify that the system operates in direct mode (with compressor running) during the morning shoulder time period.

DRAFT

Potential Problems and Cautions
Verify that if the design of the TES equipment includes a bypass that allows for direct chiller operation that it is designed so that if the bypass is used, the efficiency of the system will not be significantly reduced in comparison to a central chiller system with no TES.

Construction Inspection

Eligible systems for the TES compliance option include the following storage types: chilled water storage, ice-on-coil, ice harvester, Bbrine, ice-slurry, eutectic salt, or clathrate hydrate slurry (CHS).

The following information should be verified for the chiller and storage tank:

Chiller:
- Brand and Model
- Type (Centrifugal, Reciprocating, Other)
- Capacity (tons) (SIZE)
- Starting Efficiency (kW/ton) at beginning of ice production (COMP - KW/TON - START)
- Ending Efficiency (kW/ton) at end of ice production (COMP - KW/TON/END)
- Capacity Reduction (% /˚F) (PER – COMP - REDUCT/F)

Storage Tank:
- Storage Type (TES-TYPE)
- Number of Tanks (SIZE)
- Storage Capacity per Tank (ton-hours) (SIZE)
- Storage Rate (tons) (COOL – STORE - RATE)
- Discharge Rate (tons) (COOL – SUPPLY - RATE)
- Auxiliary Power (watts) (PUMPS + AUX - KW)
- Tank Area (CTANK – LOSS - COEFF)
- Tank Insulation (R - Value) (CTANK – LOSS – COEFF)

The installing contractor shall certify the following information, which verifies proper installation of the TES System consistent with system design expectations:
- The TES system is one of the above eligible systems.
- Initial charge rate of the storage tanks (tons).
- Final charge rate of the storage tank (tons).
- Initial discharge rate of the storage tanks (tons).
- Final discharge rate of the storage tank (tons).
- Charge test time (hrs).
- Discharge test time (hrs).
- Tank storage capacity after charge (ton-hrs).
- Tank storage capacity after discharge (ton-hrs).
- Tank standby storage losses (UA).
- Initial chiller efficiency (kW/ton) during charging.
- Final chiller efficiency (kW/ton) during charging.

DRAFT

Verify that the efficiency of the chiller meets or exceeds the requirements of Section 112 of the Standards.

Functional Testing

Step 1. Verify that the TES system and the chilled water plant is controlled and monitored by an energy management system (EMS).

Step 2. Force the time to be between 9:00 p.m. and 9:00 a.m. and simulate a partial or no charge of the tank and simulate no cooling load by setting the indoor temperature set point(s) higher than the ambient temperature.

If the tank is full or nearly full of ice, it may be necessary to adjust the control settings for this test. In some cases, the control system will not permit the chiller to start the ice-making process unless a portion of the ice has been melted. The controls designer may be using an inventory meter (a 4-20mA sensor that indicates water level) to determine whether or not ice-making can commence (for example, not allow ice-making unless the inventory meter signal is less than 17mA). If this is the case, this limit can be reset to 20mA during testing to allow ice making to occur.
Verify that the TES system starts charging (storing energy). This may be checked by verifying flow and inlet and outlet temperatures of the storage tank, or directly by reading an inventory meter if the system has one.

DRAFT

Step 3. Force the time to be between 6:00 p.m. and 9:00 p.m. and simulate a partial charge on the tank and simulate a cooling load by setting the indoor temperature set point lower than the ambient temperature. Verify that the TES system starts discharging. This may be checked by observing tank inlet and outlet temperatures and system flow, or directly by reading an inventory meter if the system has one. (If the system has no charge, verify that the system will still attempt to meet the load through storage.)

Step 4. Force the time to be between noon and 6:00 p.m. and simulate a cooling load by lowering the indoor air temperature set point below the ambient temperature. Verify that the tank starts discharging and the
compressor is off.

Step 5. Force the time to be between 9:00 a.m. to noon, and simulate a cooling load by lowering the indoor air temperature set point below the ambient temperature. Verify that the tank does not discharge and the cooling load is met by the compressor only.

Step 6. Force the time to be between 9:00 p.m. and 9:00 a.m. and simulate a full tank charge. This can be done in a couple of ways: (1) by changing the inventory sensor limit that indicates tank capacity to the Energy Management System so that it indicates a full tank, or (2) by resetting the coolant temperature that indicates a full charge to a higher temperature than the current tank leaving temperature.
Verify that the tank charging is stopped.
Step 7. Force the time to be between noon and 6:00 p.m. and simulate no cooling load by setting the indoor temperature set point above the ambient temperature. Verify that the tank does not discharge and the compressor is off.

10.7 Test Procedures for Lighting Equipments

This section includes test and verification procedures for lighting systems that require acceptance testing as listed below.

Form LTG-3-A

- ~~NJ6~~NA 7.6.1 Automatic Daylighting Controls Acceptance

Form LTG-2-A

- ~~NJ6~~NA 7.6.2 Occupancy Sensor Acceptance
- ~~NJ6~~NA 7.6.3 Manual Daylight Controls Acceptance
- ~~NJ6~~NA 7.6.4 Automatic Time Switch Control Acceptance

DRAFT

~~10.7.1~~10.1.4 NA7.6.1 Automatic Daylighting Control Acceptance

At-a-Glance

~~NJ~~NA7.6.1 Automatic Daylighting Control Acceptance
Use Form LTG-3-A

Purpose of the Test

The purpose of this test is to ensure that spaces mandated to have automatic daylighting control (refer to Standards Section 131(c)~~2~~) or those spaces receiving compliance credit for automatic daylighting controls (See Standards Section 146(a)1e) are ~~capable of achieving the~~ installed and functioning as required ~~reduced lighting levels. Automatic lighting controls can include continuous dimming, stepped dimming, and stepped switching.~~ by the standards .

Automatic daylighting controls ~~under skylights~~in daylit areas greater than 2,500 sf are mandatory and must have multiple stages of control that reduce lighting power by at least 65% (to no ~~greater than~~ more of 35% of full power). Automatic daylighting controls ~~by windows~~in smaller daylit areas are for a credit~~, do not~~ and have ~~to be multi-stage and need only control lights to no greater than 50% of full power.~~the same performance requirements.

Benefits of the Test

~~Reducing artificial light output when adequate daylight is available improves overall light quality and reduces energy usage.~~The controls save energy only if they are functioning correctly. If the control leaves the space too dark, visual quality is compromised and ultimately the control will be over ridden resulting in no energy savings. If the control leaves lights on at too high an illuminance level, the full savings from the control are not realized.

Instrumentation

To perform the test, it will be necessary to measure ambient light level and validate overall power reduction. ~~The~~In most cases, the only instrumentation ~~needed to perform the task may include, but~~required is ~~not limited to~~:

Light meter

- ~~Hand-held amperage and voltage~~ (illuminance or foot-candle meter)

~~Power~~For dimming ballasts, a default illuminance/power relationship is used to estimate power consumption. The tester can choose to directly measure power or current or use the manufacturer's dimming performance data. Additional instrumentation or data that may be needed.

- Hand-held amperage meter or power meter
- Logging light meter or power meter
- Manufacturer's light versus power curve for continuous dimming ~~ballasts~~and step dimming ballasts

Test Conditions

DRAFT

All luminaires in the daylit area must be wired and powered.

- ~~Lighting control system must be~~ Controls installed ~~and ready for system operation, including completion of all start-up procedures, per~~according to manufacturer's ~~recommendations.~~instructions
- Simulating a bright condition can be difficult; therefore, performing the test under natural sunny conditions is preferable.
- Document the initial conditions before ~~overrides or manipulation of the BAS.~~testing. All systems must be returned to normal at the end of the test.

DRAFT

Estimated Time to Complete
Construction Inspection: 1 to 3 hours (depending on whether sensor calibration is necessary, familiarity with lighting control programming language, and availability of construction documentation – i.e. electrical drawings, material cut sheets, etc.) **Equipment Test**: ~~2~~1 to ~~5~~3 hours (depending on ability to manipulate ambient light levels, familiarity with lighting control programming language, and method employed for verifying required power reduction)
Acceptance Criteria

DRAFT

- ☐Lighting is correctly circuited so that ~~only~~ general lighting fixtures in the daylit area are on the automatic daylighting control controlled circuit and lighting ~~in the area can be reduced uniformly.~~outside of the daylit area is not on the controlled circuit
- ☐Photosensor has been located properly ~~within the daylit area.~~to minimize unauthorized tampering.

~~Photosensor is factory calibrated (with calibration certificate) or field calibrated.~~

~~Illuminance setpoint is maintained continually.~~

~~Light level from each fixture is delivered to the space uniformly.~~

- The photosensor is physically separated from where calibration adjustments are made, or is capable of being calibrated in a manner that the person initiating calibration is remote from the sensor during calibration to avoid influencing calibration accuracy,
- Sensor located and oriented appropriate to the control type and location of daylit area
- Under conditions where no daylight is sensed by the control, the control system increases the light output of each fixture to the design (typically full output) light output.
- ☐The controlled fixtures reduce lighting power ~~by at least~~to no greater than 35% of full-load power under fully dimmed and/or stepped conditions.
- ☐For the continuous and stepped dimming control systems, the lamps do not “flicker” at a reduced light output condition.
- ☐For the stepped ~~dimming and switching~~ control systems, there is at least one intermediate step between full light output and minimum light output that reduces lighting power to between 70% and ~~50~~30% of full-load power.
- ☐~~For the stepped~~ Stepped dimming and stepped switching control systems~~, there is documentation of~~ have a minimum time delay of three minutes or greater ~~between each step change~~before a decrease in electric lighting.

~~Under dark conditions, the control system increases the amount of light delivered to the space to full light output for each fixture.~~For the stepped dimming and stepped switching control systems, the deadband between steps is sufficiently large to prevent cycling between steps for the same daylight illuminance.

- A “Reference Location” is defined which is served by the controlled lights and receives the least amount of daylight. Usually this is a location that is furthest away from the windows or skylights but is still served by the controlled lighting.
- A “Reference Illuminance” is defined at the Reference Location – this is the illuminance from electric lighting when no daylight is available.
- For continuous dimming systems; Under partial daylight conditions, the combined daylight and electric lighting illuminance from continuously dimmable fixtures at the Reference Location is no less than 90% of the Reference Illuminance and no greater than 150% of the Reference Illuminance.
- ☐When stepped lighting controls dim or turn off a step, the combined daylight and electric lighting illuminance from stepped dimming or stepped switching fixtures at the Reference Location is no less than the Reference Illuminance and no greater than 150% of the Reference Illuminance.

DRAFT

Potential Issues and Cautions
Check fixture circuiting while access to wiring is relatively easy (i.e. while lift is available or before obstructions are installed).
Simulating bright conditions and achieving proper luminance to perform the test can be difficult. Therefore, it is recommended that the test be performed under natural bright light conditions.
For the stepped dimming and switching control systems, it is acceptable to shorten the time delay while performing the tests, but the time delay must be returned to normal operating conditions when the test is complete (at least three minutes).

10.1.5 Definition of the daylit areas

The following information on the definitions of the daylit areas are only needed if the designer has not documented well on the plans the daylit areas or if the as built location of windows and skylights do not correspond to the daylit area on the plans. When the plans are incorrectly documenting the daylit area, it is the tester's responsibility to identify the problem and inspect and test the system based upon the as-built configuration of the daylit areas. It is recommended that this is conducted in consultation with the designer. The following definitions are the verbatim language from the Standards Section 131(c) and illustrated below.

DAYLIGHT AREA, PRIMARY SIDELIT is the combined Primary Sidelit Area without double counting overlapping areas. The floor area for each Primary Sidelit Area is directly adjacent to vertical glazing below the ceiling with an area equal to the product of the Sidelit width and the Primary Sidelit depth.

The Primary Sidelit width is the width of the window plus, on each side, the smallest of:
i. Two feet; or
ii. The distance to any five feet or higher permanent vertical obstruction.

The Primary Sidelit depth is the horizontal distance perpendicular to the glazing which is the smaller of:
i. One window head height; or
ii. The distance to any five feet or higher permanent vertical obstruction.

DRAFT

DAYLIGHT AREA. SECONDARY SIDELIT is the combined Secondary Sidelit Area without double counting overlapping areas. The floor area for each Secondary Sidelit Area is directly adjacent to Primary Sidelit Area with an area equal to the product of the Sidelit width and the Secondary Sidelit depth.

The Secondary Sidelit width is the width of the window plus, on each side, the smallest of:
i. Two feet; or

ii. The distance to any five feet or higher permanent vertical obstruction; or
iii. The distance to any skylit daylight area

The Secondary Sidelit depth is the horizontal distance perpendicular to the glazing which begins from one window head height, and ends at the smaller of:
i. Two window head heights;
ii. The distance to any five feet or higher permanent vertical obstruction; or
iii. The distance to any skylit daylight area.

Figure Primary Sidelit Area Plan view

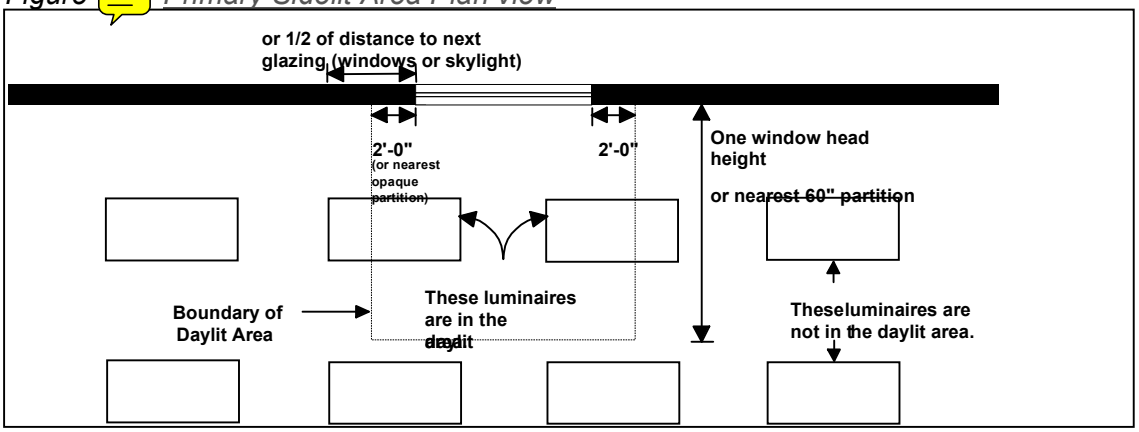

Figure 10-2 Side view of Primary and Secondary Sidelit Area

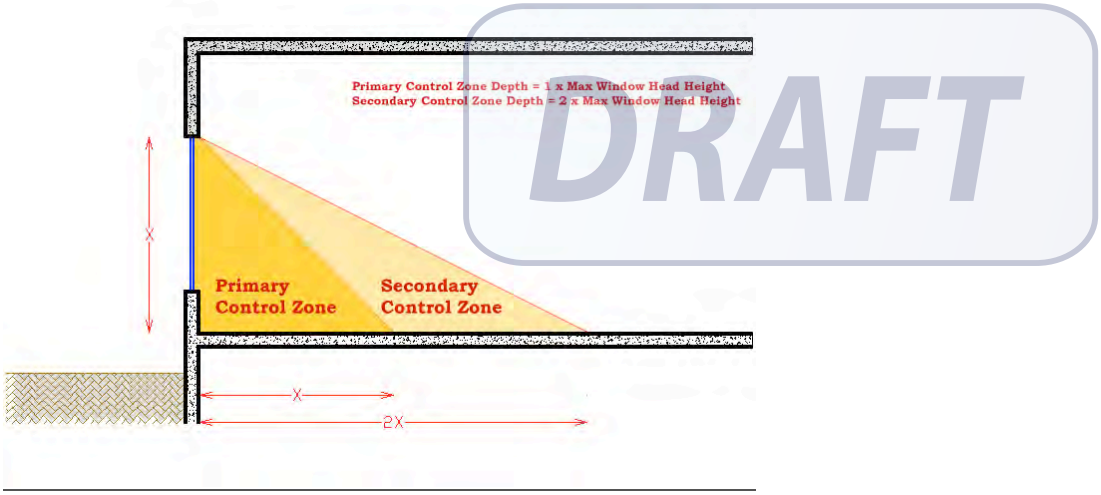

DAYLIGHT AREA, SKYLIT is the combined daylight area under each skylight without double counting overlapping areas. The daylight area under each skylight is bounded by the rough opening of the skylight, plus horizontally in each direction the smallest of:
i. 70% of the floor-to-ceiling height; or
ii. The distance to any primary sidelit area, or the daylight area under rooftop monitors; or
iii. the distance to any permanent partition or permanent rack which is farther away than 70% of the distance between the top of the permanent partition or permanent rack and the ceiling.

In buildings with no partitions, the daylit area under skylights is the footprint of the skylight plus in each direction 70% of the ceiling height or halfway to the next skylight or window. This is shown in the next figure

Figure 10-3 Elevation View of Daylit Area under Skylight (no interior partitions)

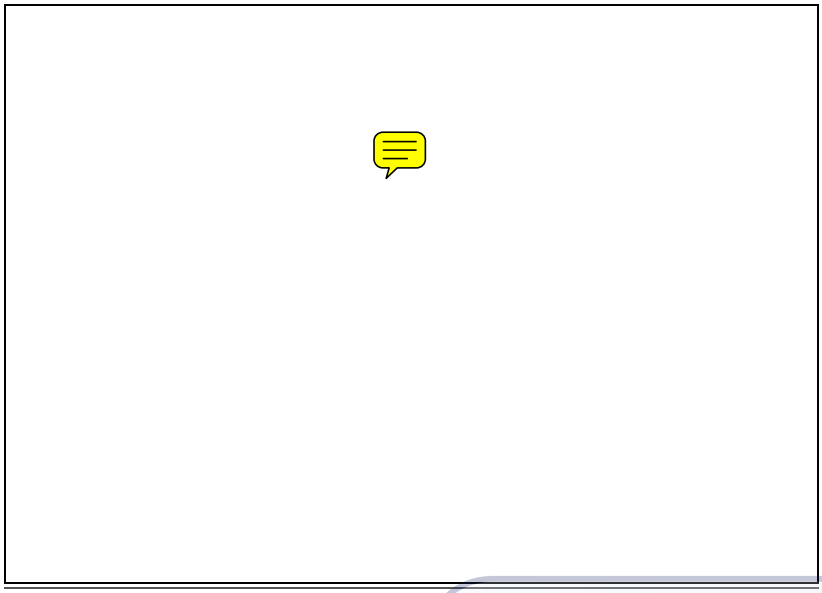

If there are permanent partitions or racks below the skylight, the partitions block the full extent of the skylit area. If there is a partition further from the edge of the skylight than 70% of the gap between the top of the partition and the ceiling, then the extent of the skylit area stops at the partition. The gap is the ceiling height minus the stack or partition height. The following figure shows this.

DRAFT

Figure 10-4 Elevation View of Daylit Area under Skylight (with interior partitions)

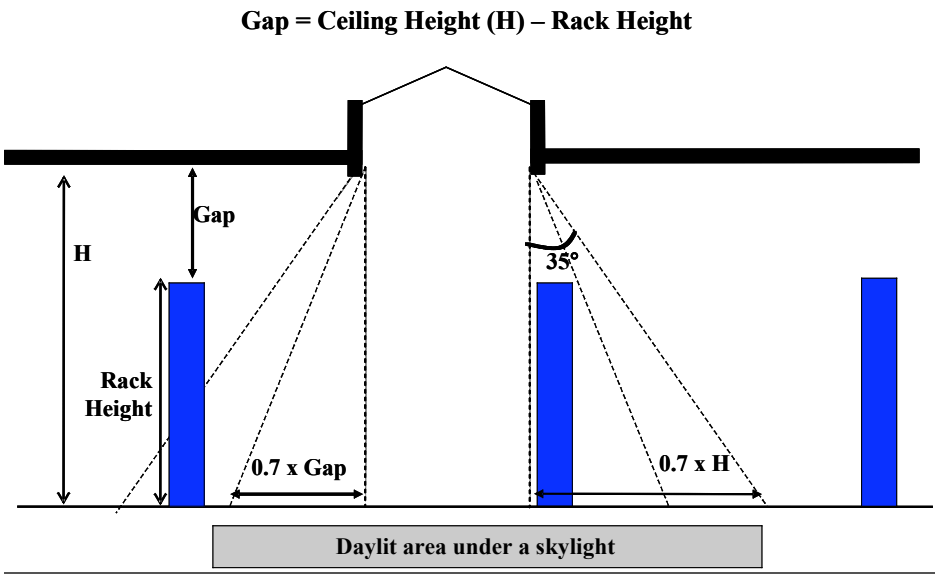

Background area for Daylit Area

Figure 10-5 Plan View of Daylit Area under Skylight (with interior partitions)

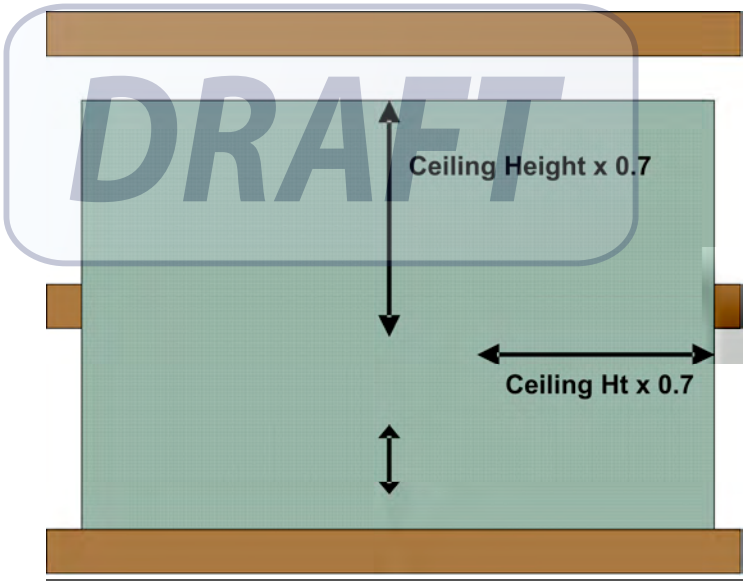

10.1.6 10.7.2 Test Procedures: NJA7.6.1 Automatic Daylighting Control Acceptance, Use Form LTG-3-A

Construction Inspection

~~All photosensors have been properly located. Per the Standards, an individual photosensor must be located within the daylit area and~~ Purpose of the Test

The purpose of this construction inspection is to ensure that the daylighting controls that are installed in the space meet the location, specification and accessibility requirements per the Standards Section 119(f).

Criteria for Passing the Test

The system must pass all five key criteria identified in Form LTG-3-A Part I:

- Daylit Zones are clearly marked on plans or drawn on as-built drawings
- Daylit Zone type and control type is clearly identified on the Form
- Sensors and controls are appropriate for the daylit area and intended functions, and are located in appropriate locations per Standards Section 119(f) and 131(c)
- Sensor and control setpoints are documented and provided to the installer
- Daylighting controls only control those luminaires that are in the daylit area and luminaires in sidelit daylit areas are controlled separately from luminaires in skylight daylit areas.

How to Conduct the Test and Fill the Form

DRAFT

Step 1: Daylit Zones Shown on Plans

The building plans are required to have a drawing of the extents of the daylit areas when controls are required or controls are used to obtain lighting control credits.

If the plans do not have the daylit areas indicated for the spaces containing photocontrols, draw the daylit areas on the as-built plans and attach to the acceptance test forms. A copy should be sent to the designer and the building owner.

If more than one type of daylit zones and thus daylighting control systems exist on site, these should be clearly marked on the plans, and also noted on the Form. The Form allows the user to specify up to three (3) systems per Form.

For buildings with several daylighting controls, it is allowable to sample the controls for Acceptance Testing. If this is the case, it should be clearly noted on the forms. A separate sheet should be attached to the Form with names of the other controls and systems that are being represented by the three systems on the Form.

Step 2: System Information

Daylit Zone Type:

- There are three types of daylit area:
  1) the skylit area under skylights,
  2) the primary sidelit area adjacent to within one window head height of the vertical glazing, and

3) the secondary sidelit area, between the primary sidelit area and two window head heights from the vertical glazing.

- The window head height is the distance from the floor to the top of the highest window on the wall section. These areas are defined in Standards Section 101 "Definitions and Rules of Construction." This is summarized in the Section titled *"Definition of daylit areas."*

Controlled Lighting Wattage:

- Note the total wattage of luminaires that are controlled by the given control system. If there are multiple controls systems (A,B,C on the Form), identify controlled wattage separately for each type of control system.
- When the primary sidelit area or skylit area in a room (enclosed space) is greater than 2,500 sf, all general lighting in this daylit area is required to be controlled by an automatic daylighting control.
  - General lighting is defined as lighting that is "designed to provide a substantially uniform level of illumination throughout an area, exclusive of any provision for special visual tasks or decorative effect." Linear fluorescent troffers and pendants, high and low bay luminaires and other non-directional light sources are considered general lighting.
  - When automatic daylighting controls are required in primary sidelit areas greater than 2,500 sf, these lights must be separately controlled from the secondary sidelit area.
  - Controlling lights in the secondary sidelit area is voluntary or for a control credit.
- The photocontrol must control only those fixtures in ~~that zone.~~the daylit area. A lamp is considered to be in the daylit area if at least ½ of the lamp is in the ~~zone.~~daylit area. With long pendant fixtures that cross into the daylit area, the lamps that are in the daylit area must be controlled separately from those not in the daylit area. ~~For example, multiple enclosed offices my not be controlled by a single photosensor. In addition the photosensor must be either ceiling mounted or located where it will measure light levels adequately and is inaccessible to unauthorized personnel. Correct photosensor location within the daylit space is critical. For vertical glazing, the typical daylit area is estimated by multiplying window width by a nominal 15 feet depth and the photosensor should be located within this depth range. For horizontal glazing (skylights), the daylit area is estimated by the dimensions of the skylight added to the lesser of 70% of the floor-to-ceiling height, distance to nearest 60 inch high partition, of half the distance to the next skylight or window in all directions. The photosensor should be located within this daylit area.~~

DRAFT

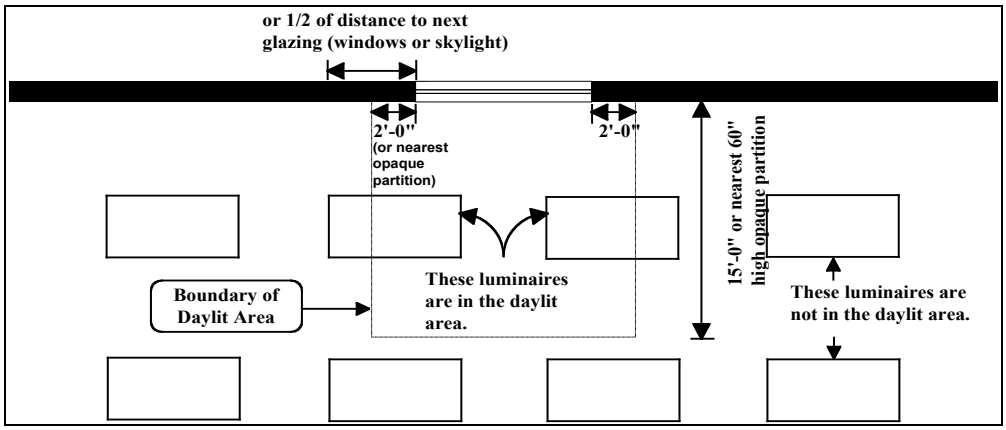

~~*Figure* **Error! No text of specified style in document.** *1 – Window Daylit Area*~~

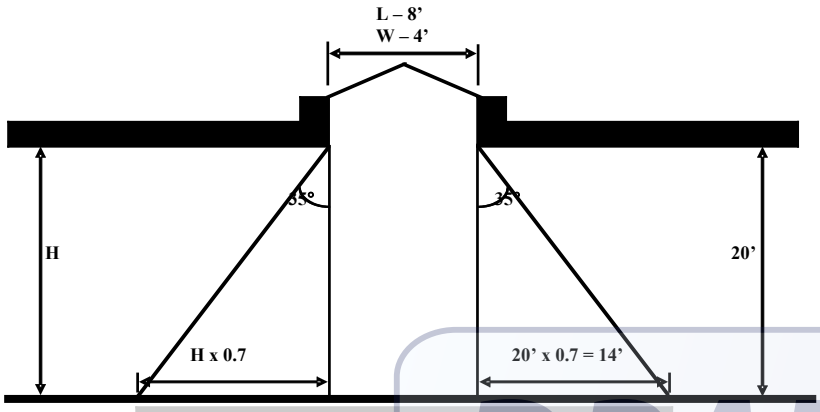

DAYLIT AREA

36' long, 32' wide, area= 1,152 ft^2

DRAFT

~~*Figure* **Error! No text of specified style in document.** *2 – Elevation View of Daylit Area under Skylight*~~

- ~~All photosensors have been either factory calibrated or field calibrated. A calibration certificate provided from the manufacturer for each sensor will be acceptable. Field calibration check will require following manufacturer's calibration instructions, required per §119(a), which may include measuring ambient light levels and comparing the resulting light output of the controlled luminaires.~~
- ~~Verify installer has provided adequate documentation pertaining to illuminance level setpoints, settings, and programming for each zone being controlled. Examples include, but are not limited to:~~
- ~~Sufficient time delays are programmed for stepped dimming or switching controls to prevent short cycling of light output from the lamps. Time delay between steps should be three minutes or greater.~~
- ~~Illuminance level to be maintained within each control zone is reasonable for the space and tasks served. The illumination setpoint should be provided by the lighting designer and may be found in the design narrative, specifications, or lighting control drawings. If the designer does not provide the information, contact the designer and ask for documentation of illumination setpoints for each daylighting control. These design setpoints should be attached to the as-built plans.~~

- ~~Ensure only the luminaires located within the various daylit zones are controlled by the automatic daylighting system. This can be verified by reviewing the lighting control as-built drawings and electrical drawings.~~

~~***Functional Testing***~~

~~**Step 1: Simulate bright conditions.** Ensure the lights within each daylit zone are controlled correctly. Simulating a bright condition can be accomplished by opening all shading devices to allow natural daylight into the space or shine a bright flashlight or other light source onto the photosensor if natural conditions are not adequate at the time of the test.~~

~~***Verify and Document***~~

~~*All Automatic Daylight Control Strategies*~~

- ~~Ensure only luminaires within the daylit zone are controlled. For example, if an enclosed zone has two fixtures and one is in the daylit area but the other is not, only the fixture closest to the daylight source is controlled.~~
- ~~Measure ambient light level and document location of measurement within the control zone. Verify illuminance setpoint is maintained continually.~~
- ~~Automatic daylighting controls under skylights are required to have multiple levels of light output and automatically reduce lighting power to no greater than 35% of full power. This could include turning all luminaires completely off.~~
- ~~Automatic daylighting controls by windows do not necessarily have to have multiple steps, but they must reduce electric lighting in the daylit area to no greater than 50% of full power.~~

DRAFT

~~*Continuous Dimming Control Systems*~~

- ~~Typically with a continuous dimming control strategy, a lighting controller will vary the control voltage sent to the ballasts in direct relation to the input signal received from the photosensor in order to maintain ambient light level setpoint. In some instances, the controller may turn the lights completely off if ambient light level far exceeds setpoint. However, some continuous dimming systems do not utilize a stand-alone controller and the ballasts are controlled directly from the output signal from the photosensor. In these applications, the ballasts will operate at a minimum output but will not turn off completely. Verify the controlled fixtures reduce lighting power to at least 35% of full load power under fully dimmed conditions. Validating power reduction can include, but is not limited to:~~
- ~~Measuring minimum and maximum light output to calculate a percent output value and comparing this value with manufacturer's specified power input at that percent light output (some ballast cut sheets will provide a curve illustrating the ballast input power vs. percent light output). If input power at a fully-dimmed condition is 35% of full load power at full light output or if the controller turns the lights off completely when ambient light level far exceeds setpoint, the system passes.~~
- ~~Measure the input current to a fixture or a circuit of controlled fixtures at both minimum and maximum dimming conditions and calculate power reduction as a ratio of current under minimum light output to the current at full light output.~~

- ~~Depending on the options available for the controller, it may be possible to view lighting circuit amperage or power consumption from the output display.~~
- ~~Ensure light level from each fixture is delivered to the space uniformly. This means that the light output from each fixture connected to the same control zone should be at the same illuminance level. Uniformity is considered to be acceptable when alternating lamps, luminaires or rows of luminaires are controlled by different stages of a switching control. Combined daylight plus electric light uniformity is also achieved if the light fixtures closest to windows or skylights are grouped together for turning off first before other light fixtures which are also in the daylit area but further away from the daylight source.~~

- ~~Verify that the lamps do not "flicker" at a reduced light output condition. The~~ Controls for sidelit areas are required to be separate from controls for skylit areas

> *NOTE: A higher lighting control credit is available to those designs that control the primary sidelit area separately from the secondary sidelit area. The LTG-1-C form and the plans will indicate whether the control is controlling the lights together or separately.*
>
> *NOTE: Identifying which fixtures are controlled by a given sensor or control can be difficult without operating the system. For this reason, it may be better to conduct this portion of the construction inspection in conjunction with the functional performance test.*
>
> *The controlled fixtures are readily identified by noting which fixtures are turned on and off or are dimming in response to the no daylight and full daylight functional performance tests.*

DRAFT

Control Type:

- Identify the type of luminaire control used in each of the control systems identified in the Form. There are three types of controls identified in the Form:
  - Continuous dimming controls are controls that alter the output of lamps in at least 10 steps.
  - Step dimming controls alter the output of lamps in less than 10 steps (usually one or two steps between on and off).
  - Step switching controls turns lamps or groups of lamps on and off without any steps between on and off
    - Stepped switching controls are able to provide multi-level lighting by having more than one group of lamps being controlled. Partial light output (and partial power consumption) of the stepped switching lighting system is provided by turning some of the lamps on.

Design Footcandles:

- Note the design footcandles for general illumination in the daylit zone served by each of the control systems identified in the Form. If the design

footcandle is not known for a given control system, clearly identify on the Form that it is unknown.

Step 3: Sensors and Controls

Loop Type and Sensor Location:

- Verify that all photosensors have been properly located. Per the Standards Section 131(c)2D, an individual photosensor must be located so that it is not readily accessible. This placement is intended to make it difficult to tamper with the photosensor. Photocontrols that are part of a wallbox occupancy sensor will not comply.
- The photosensor must be located so that can readily sense daylight entering into the daylit area.
    - Closed loop sensors – sensors that measure both daylight and the controlled electric light shall be located within the area served by the controlled lighting.
    - Open loop sensors – sensors that mostly measure the daylight source shall be outdoors, or near a skylight or window.

Control Adjustment Location:

- Adjustments to the controls must be "readily accessible" to authorized personnel or are in ceilings that are 11 feet or less.
    - Readily accessible means that one can walk up to the control adjustment interface and access it without climbing ladders, moving boxes etc. The control can be in a locked cabinet to prevent unauthorized access. Controls that can be adjusted via a wireless handheld device would also qualify as being readily accessible.
    - Controls that are in ceiling 11 feet or less must be within 2 feet of the ceiling access and the ceiling access must be no more than 11 feet above the floor.

DRAFT

Step 4: Control System Documentation

- Verify that the setpoints, settings and programming on each of the control system device has been documented and provided by the installer.

Step 5: Daylit Zone Circuiting

- Verify that the luminaires in the daylit zone are controlled separately from those outside the daylit zone. Further, verify that the luminaires in daylit areas near windows are circuited separately from the luminaires in daylit areas under skylights.

NOTE: Zone Illuminated by Controlled Luminaires

The daylit areas (primary sidelit, secondary sidelit and toplit areas) define which luminaires (light fixtures) are controlled. When the controlled luminaires are on the edge of these areas, the "Zone Illuminated by Controlled Luminaires," can extend past the daylit area because these luminaires provide at least half of the light to areas that are halfway between the controlled luminaires and the next row of uncontrolled luminaires.

Functional Performance Testing

There are two separate functional performance tests that are specific to the type of control being tested. The first test is suitable for continuous dimming systems and the second test is for step dimming or step switching controls.

- Continuous dimming controls are controls that alter the output of lamps in at least 10 steps.
- Step dimming controls alter the output of lamps in less than 10 steps (usually one or two steps between on and off).
- Step switching controls turns lamps or groups of lamps on and off without any steps between on and off
  - Stepped switching controls are able to provide multi-level lighting by having more than one group of lamps being controlled. Partial light output (and partial power consumption) of the stepped switching lighting system is provided by turning some of the lamps on.

The tests for stepped switching and stepped dimming controls are combined as the discrete steps of light output render them sufficiently similar for functional testing.

NOTE:

Many of the steps in these acceptance tests can be conducted while setting up the controls according to manufacturer's instructions. Read these tests prior to conducting equipment set-up and bring the forms along while conducting set-up. This way you can conduct the equipment set-up and perform the acceptance test at the same time.

DRAFT

Sampled functional performance testing of systems smaller than 5,000 sf

All photocontrols serving more than 5,000 sf of total daylit area shall undergo functional testing. Photocontrols that are serving 5,000 sf or less are allowed to be tested on a sampled basis. The sampling rules are as follows

- For buildings with up to five (5) photocontrols, all photocontrols shall be tested.
- For buildings with more than five (5) photocontrols, sampling may be done on spaces with similar sensors and cardinal orientations of glazing.

- If the first photocontrol in the sample group passes the functional test, the remaining building spaces in the sample group also pass.
- If any photocontrol in the sample group fails, it shall be repaired or replaced as required until it passes the test. An additional photocontrol in the group shall be selected and tested.
- This process shall repeat until all photocontrols have passed the test or the photocontrol tested passes on the first testing.

Continuous Dimming Control Systems - Functional Performance Test

Purpose of the Test

This test is for continuous dimming systems with more than 10 steps of light output from the controlled lighting. For instructions on acceptance testing of other systems with less than 10 steps of control, skip this section and proceed to the next section Stepped Switching or Stepped Dimming Control Systems Functional Performance Test.

Criteria for Passing the Test

Key criteria for passing the functional performance test are:

- When there is NO daylight in the space, all controlled luminaires are at full or rated lighting output and power consumption.
- Where there is full daylight in the space (daylight alone provides adequate illumination in space), luminaires in the daylit zone use less than 35% of rated power.
- When there is some daylight in the space, the luminaires in the daylit zone are dimmed appropriately.

DRAFT

How to Conduct the Test and Fill the Form

Step 1: Identify Reference Location

The Reference Location is the location in zone served by the controlled lighting that is receiving the least amount of daylight.

The Reference Location will be used for light level (illuminance in foot-candles) measurements in subsequent tests. The Reference Location is used in testing the daylighting controls so that it can be assured that all occupants in the zone served by the controlled lighting always have sufficient light.

The Reference Location can be identified using either the illuminance method or the distance method.

Illuminance Method:

- Turn OFF controlled lighting and measure daylight illuminances within zone illuminated by controlled luminaires. Note that zone illuminated by controlled luminaires is not necessarily the same as the daylit area. See the Section above with the heading "*Zone Illuminated by Controlled Luminaires*."
- Identify the Reference Location; this is the location with lowest daylight illuminance in the zone illuminated by controlled luminaires.
- Turn controlled lights back ON.

Distance Method:

- Identify the Reference Location; this is the location within the zone illuminated by controlled luminaires that is furthest way from daylight sources. Note that zone illuminated by controlled luminaires is not necessarily the same as the daylit area. See the note above with the heading *"Zone Illuminated by Controlled Luminaires."*

Step 2: No Daylight Test

The purpose of the no daylight test is to provide a baseline light level, the Reference Illuminance, against which the test profesional will be comparing the performance of the system during daylit conditions. This test is also verifying that the control is providing adequate light at night.

When conducting this test, the other lights in the space should be turned off. Simulate or provide conditions without daylight. This condition can be provided by any of the applicable methods:

- Conducting this part of the test at night, or

Leave a logging light meter at the Reference Location(s) overnight. The logger should be collecting data on an interval no longer than 1 minute per reading, taking reading on even shorter intervals is recommended.

- Closing blinds or covering fenestration so that very little daylight enters the zone you are testing, or

Very little daylight is less than 1 fc for warehouses and less than 5 fc for all other occupancies.

- For open loop systems only, one may cover the photosensor to simulate no daylight conditions. Covering the sensor is not allowed for closed loop controls as we want to assure that the control will work correctly at night as well during the day. We will want to assure that the light output is above 70% of the rated light output or within 20% of the design illuminance.

Reference Illuminance:

Document the Reference Illuminance (fc) – the horizontal electric lighting illuminance (footcandles) at the Reference Location identified in Step 1.

DRAFT

- This measurement is taken by an illuminance sensor (light meter) 30 inches above floor level. The sensor should be facing upwards. Mounting the light meter on a tripod is recommended so that consistent measurements are taken. Try not to shade the meter with your body while taking measurements.
- When it is not possible to exclude daylight from the space during this test, the Reference Illuminance can be calculated by subtracting the daylight illuminance from the combined illuminance (footcandles) of the electric lighting and daylight. The daylight illuminance is measured by turning off the controlled lights

Power Measurement (Optional):

If a current or power measurement is going to be used in Step 3 to show power reduction under fully dimmed conditions, collect full load current or power.

- This is not normally necessary for systems with dimming fluorescent ballasts. It is easier just to compare electric lighting illuminance. For more details see Step 3 "*Full Daylight Test.*"

Full load rating or measurement

The full load rating can be obtained a number of ways:

- One may also choose to manipulate the calibration adjustments (remember to write down the setting first before changing them) to obtain full light output from the controlled lighting. This might require turning the setpoint very low and turning the high limit very high. Discuss your approach with the control manufacturer with their recommendations to get full light output. If the photosensor is accessible, covering the photosensor is a way to assure full light output.
- If you cannot eliminate all daylight from the area or other electric light from other luminaires. Turn the controlled lighting on and off and the difference in light level will be the contribution of the controlled lighting.
- If one is measuring power or amps, the rated amps can be directly measured under this condition. First verify that only the controlled lights in the daylit area are being measured. You may want to disconnect and re-energize this circuit to assure you are measuring what you intend.
- The rated amps or power from the manufacturer's cut-sheet is also sufficient.

Sufficient Illumination Test

Verify that the controlled lighting is providing sufficient illumination under no daylight conditions. The system is deemed to be providing sufficient illumination if any of the following conditions are true:

DRAFT

- The No Daylight Reference Illuminance (fc) is at least 70% of the Full Load Illuminance (fc).
- Measured Amps or Watts are at least 70% of the Full Load Amps or Watts.
- Measured Amps or Watts are at least 70% of the Full Load Amps or watts from the Manufacturer's cut-sheets.
- The No Daylight Reference Illuminance (fc) is within 20% of the design illuminance as documented on the plans.

Step 3: Full daylight test.

Simulate or provide bright conditions so that the illuminance (fc) from daylight only at the Reference Location identified in Step 1 is greater than 150% of the Reference Illuminance (fc) measured at this location during the no daylight test documented in Step 2.

- Simulating a bright condition can be accomplished by opening all shading devices to allow natural daylight into the space
- If natural conditions are not adequate at the time of the test, shine a bright flashlight or other light source onto the photosensor.
- Temporarily change the setpoint to a very low value for the duration of this test. Then return the setpoint to its normal setting.

Verify and document the following:

- Lighting power reduction is at least 65% under fully dimmed conditions. Lighting power reduction can be determined as follows:
  - Dimming fluorescent lighting is deemed to reduce power by 65% when the controlled electric light output is reduced by 75%
  - Dimming metal halide is deemed to have reduced power by 44% when light output is reduced by 75%.
  - One method of attaining the 65% power reduction with dimming metal halide systems is to turn off half of the luminaires and dim the other half.
  - The power reduction in higher performing dimming ballasts can be estimated from lighting output reductions if it is accompanied with a manufacturer's ballast cut sheets containing a ballast input power vs. percent light output curve or table.
  - Power reduction can be directly measured using either a power meter or an ammeter. The percent reduction

DRAFT

in current will be a sufficient representation of the percent reduction in power.

- The system lighting power reduction is given by the following relations:

  Reduction = Fraction of lights turned off + Fraction of lights dimmed x power reduction of the dimmed lamps

  Where,

  The power reduction of dimmed lamps =

  (Rated power – dimmed power) / rated power

  An example of this equation is given below for where a metal halide dimming system dims half of the lamps and the other half of the lamps are fully dimmed. The System Power Reduction, SPR is:

  SPR = 0.5 + (0.5 x 0.44) = 0.72 or 72%

  This is above the 65% threshold.

Verify that only luminaires in appropriate daylit zone are affected by daylight control.

- Sidelit zones have to be separately controlled from skylit zones.
- If the primary sidelit area is greater than 2,500 sf, the primary sidelit area shall be separately controlled from both skylit areas and secondary sidelit areas.
- For smaller sidelit areas, if the designer has taken the higher lighting control credit for separately controlling the primary sidelit area from the secondary sidelit area, the two areas have to be separately controlled.
- The daylighting control shall not control fixtures outside of daylit areas

Verify that light output is stable with no discernable flicker.

~~6.~~• The intent of this requirement is to ensure the lights do not flicker because occupants may override the system if light flicker is an annoyance. Flicker refers to a rapid fluctuation in light output that can be detected by the human eye.

DRAFT

~~*Stepped Dimming Control Systems*~~

~~• Typically with a stepped dimming control strategy, a lighting controller will vary the control voltage sent to the ballasts in discrete "steps" as ambient light level deviates from setpoint. Most stepped dimming control systems will have at least two or three "steps" to ensure a~~

more inconspicuous reduction in light level, with one of the steps turning off the lights completely if ambient light level far exceeds setpoint. Verify the controlled fixtures reduce lighting power to at least 50% of full-load power under fully dimmed conditions in daylit areas by windows and to no greater than 35% of full load power in daylit areas under skylights. Validating power reduction can include, but is not limited to:

- Make note if the lights dim. If they do, and there is only one step, make note of the fraction of power reduced according to the manufacturer's cut sheet. If input power at a fully-dimmed condition is below the criteria described above or if the controller turns the lights off completely when ambient light level far exceeds setpoint, the system passes.
- Measure the input current to the controlled fixtures at both minimum and maximum dimming conditions and calculate power reduction as a ratio of current under minimum light output to the current at full light output.
- Depending on the options available for the controller, it may be possible to view lighting circuit amperage or power consumption from the output display.
- Verify that there is at least one intermediate step between full light output and minimum light output that reduces lighting power to between 70% and 50% of full-load power. The intent is to prevent drastic changes in light level as natural Step 4: Partial daylight levels fluctuate. The same procedures as those described above can be used to determine system power at this reduced light output level.

Verify minimum time delay between each step change is three minutes to prevent short cycling of light output. It would be acceptable to shorten the time delay while performing the tests, but ensure the programmed time delay is at least three minutes and the system is returned to normal operating conditions when the test is complete..

- Ensure light level from each fixture is delivered to the space uniformly. The intent of this requirement is to prevent severe contrasts in illumination within the space because occupants may override the system if uneven light distribution is an annoyance. This means that the light output from each fixture connected to the same control zone should be at the same illuminance level. The designer may have more than one control zone within the total daylit areas of a space with the zone closest to the daylit source turning off at lower ambient daylight levels than those further away from the source.
- Verify that the lamps do not "flicker" at a reduced light output condition. The intent of this requirement is to ensure the lights do not flicker because occupants may override the system if light flicker is an annoyance. Flicker refers to a rapid fluctuation in light output that can be detected by the human eye.

Stepped Switching Control Systems

- Typically with a stepped dimming control strategy, a lighting controller will turn lamps ON and OFF in discrete "steps" as ambient light level exceeds setpoint. Most stepped switching control systems will have

DRAFT

~~at least two or perhaps three "steps" to ensure a more inconspicuous reduction in light level, with one of the steps turning off the lights completely. Verify that the controlled fixtures reduce lighting power to no more than 50% of full-load power under lowest light output in daylit areas near windows and to no more than 35% of full-load power under lowest light output in daylit areas under skylights. Validating power reduction can include, but is not limited to, visual inspection of the lamps within the control zone. For example, turning off 2 of 3 lamps in a 3-lamp fixture will satisfy the requirement. In addition, turning the lights off completely also meets the intent of the requirement – this may be a typical control strategy for 2-lamp fixtures.~~

- ~~Verify that there is at least one intermediate step between full light output and minimum light output that reduces lighting power to between 70% and 50% of full-load power. The intent is to prevent drastic changes in light level as natural~~Simulate or provide bright conditions where illuminance (fc) from daylight only at the Reference Location is between 60% and 95% of Reference Illuminance (fc) documented in Step 2. These partial daylight ~~levels fluctuate. For example, turning off 1 of 3 lamps in a 3-lamp fixture or 2 of 4 lamps in a 4-lamp fixture will satisfy the requirement.~~
- ~~Verify minimum time delay between each step change is three minutes to prevent short cycling of light output. It would be acceptable to shorten the time delay while performing the tests, but ensure the programmed time delay is at least three minutes and the system is returned to normal operating conditions when the test is complete.~~
- ~~The amount of light delivered to the control zone is uniformly reduced. The intent of this requirement is to prevent severe contrasts in illumination within the space because occupants may override the system if uneven light distribution is an annoyance. For switch control, examples of uniform~~ illuminance ~~include: two of four lamps in a fixture are turned off; center lamp or two outside lamps in 3-lamp fixtures are turned off; or lamps in alternating fixtures are turned off.~~

DRAFT

~~**Step 2: Simulate dark**~~ conditions~~. Ensure the lights within each daylit zone are controlled correctly. Simulating a dark condition~~ can be ~~accomplished~~achieved by~~, but not limited to, closing all shading devices to block natural daylight into the space, performing tests when natural conditions are accommodating (i.e., dark outside), or shading the photosensor from the ambient light levels using portable shrouds.~~:

- Scheduling the test so that daylight conditions are within this fairly broad range of illuminances.
- Adjusting blinds and louvers

*Verify ~~**and Document**~~*

~~*All Automatic Daylight Control Strategies*~~

~~*Measure ambient light level*~~ and document ~~*location of measurement within the control zone. Verify illuminance setpoint is maintained continually.*~~*the following:*

- Measured combined illuminance of daylight and controlled electric lighting (fc) at the Reference Location
- Verify this measured illuminance is no less than the Reference Illuminance documented in Step 2, and
- Verify this measured illuminance is no greater than 150% of the Reference Illuminance (fc) documented in Step 2

This test assures that the control does not over-dim and leave people with not enough light in the Reference Location of the zone served by the controlled lights. This also makes sure that the control does not under-dim and not save enough energy. By setting the upper bound of illuminance to 150% of the Reference Illuminance, this leaves plenty of room for non-optimal configurations and for adaptation compensation.

Adaptation compensation is a control strategy that accounts for people needing less light at night. When someone walks into a store late at night from a parking lot with light levels at 1 fc they may not need or want light at 50 fc. Thus a store may decide to have higher light levels during the day than at night. This protocol would allow daytime light levels that are 50% higher than the night time light levels.

DRAFT

Stepped Switching or Stepped Dimming Control Systems Functional Performance Test

Purpose of the Test

This functional performance test is for systems that have no more than 10 discrete steps of control of light output. For instructions on how to test systems with more than 10 steps of control including those systems where the dimming appears to continuous proceed to the previous section - Continuous Dimming Control Systems - Functional Performance Test.

- ~~Verify the control system increases the amount of light delivered to the space to full light output for each fixture.~~
- ~~Verify that the lamps do not "flicker" at full light output condition. The intent of the requirement is to ensure the lights do not flicker because occupants may override the system if light flicker is an annoyance.~~

~~*Stepped Dimming Control Systems*~~

- ~~Verify the control system increases the amount of light delivered to the space to full light output for each fixture.~~
- ~~Verify that the lamps do not "flicker" at full light output condition. The intent of the requirement is to ensure the lights do not flicker because occupants may override the system if light flicker is an annoyance.~~
- ~~Verify minimum time delay between each step change is three minutes to prevent short cycling of light output. It would be acceptable to shorten the time delay while performing the tests, but~~

~~ensure the programmed time delay is at least three minutes and the system is returned to normal operating conditions when the test is complete.~~

~~*Stepped Switching Control Systems*~~

- ~~Verify the control system increases the amount of light delivered to the space to full light output for each fixture.~~
- ~~Verify minimum time delay between each step change is three minutes to prevent short cycling of light output. It would be acceptable to shorten the time delay while performing the tests, but ensure the programmed time delay is at least three minutes and the system is returned to normal operating conditions when the test is complete.~~

~~**Step 3: Return system back to normal operating condition.** Ensure all schedules, setpoints, operating conditions, and control parameters are placed back at their initial conditions.~~

If the control has three steps of control or less, conduct the following tests for all steps of control. If the control has more than three steps of control, testing three steps of control is sufficient for showing compliance.

If these tests are to be conducted manually (spot measurements) it is recommended to test the system with the time delay minimized or otherwise overridden so the test can be conducted more quickly.

These tests can also be conducted with a logging (recording) light meter. In this case, the time delay should be left on so the recorded data also shows the results of the time delay. In the logging method, one would print out a plot of the day's illuminance at the Reference Location and annotate the plot showing where each stage of lighting had shut off and how the light level just after shutting off for each stage is between the Reference Illuminance and 150% of the Reference Illuminance.

DRAFT

Criteria for Passing the Test

Key criteria for passing the functional performance test are:

- When there is NO daylight in the space, all controlled luminaires are at full or rated lighting output and power consumption.
- Where there is full daylight in the space (daylight alone provides adequate illumination in space), luminaires in the daylit zone use less than 35% of rated power.
- When there is some daylight in the space, the luminaires in the daylit zone are switched or dimmed appropriately.

  If the control has three steps of control or less all steps of control are tested. If the control has more than three steps of control, testing three steps of control is sufficient for showing compliance.

- There is a time delay of at least 3 minutes between when daylight changes from little daylight to full daylight and the luminaire power consumption reduces through dimming.

How to Conduct the Test and Fill the Form

Step 1: Identify Reference Location

The Reference Location is the location in zone served by the controlled lighting that is receiving the least amount of daylight. The Reference Location will be used for light level (illuminance in foot-candles) measurements in subsequent tests. The Reference Location is used in testing the daylighting controls so that it can be assured that all occupants in the zone served by the controlled lighting always have sufficient light.

If lighting controls are staged so that one stage is closer to the daylight source, identify a minimum daylighting location for each stage of control.

If lighting controls are NOT staged based on distance to the daylight source, select a single minimum daylighting location representing all stages of the control. This minimum daylighting location for each stage of control is designated as the Reference Location for that stage of control and will be used for illuminance measurements in subsequent tests.

The Reference Location can be identified using either the illuminance method or the distance method.

Illuminance Method

- Turn OFF controlled lighting and measure daylight illuminances within zone illuminated by controlled luminaires
- Identify the Reference Location; this is the location with lowest daylight illuminance in the zone illuminated by controlled luminaires.
- Turn controlled lights back ON.

DRAFT

Distance Method

- Identify the Reference Location; this is the location within the zone illuminated by controlled luminaires that is furthest way from daylight sources.

Step 2: No Daylight Test

Simulate or provide conditions without daylight for a stepped switching or stepped dimming control system. This condition can be provided by any of the applicable methods:

- Conducting this part of the test at night, or

Leave a logging light meter at the Reference Location(s) overnight. The logger should be collecting data on an interval

no longer than 1 minute per reading, taking reading on even shorter intervals is recommended.

- Closing blinds or covering fenestration so that very little daylight enters the zone you are testing, or

  Very little daylight is less than 1 fc for warehouses and less than 5 fc for all other occupancies.

- Cover the photosensor

If the control is manually adjusted (not self commissioning), make note of the time delay and override time delay or set time delay to minimum setting. This condition shall be in effect through step 4.

When conducting this test, the other lights in the space should be turned off.

Verify and document the following:

- Automatic daylight control system turns ON all stages of controlled lights
- Document the Reference Illuminance (fc) – the horizontal electric lighting illuminance (footcandles) at the Reference Location identified in Step 1.

This measurement is taken by an illuminance sensor (light meter) 30 inches above floor level. The sensor should be facing upwards. Mounting the light meter on a tripod is recommended so that consistent measurements are taken. Try not to shade the meter with your body while taking measurements.

When it is not possible to exclude daylight from the space during this test, the Reference Illuminance can be calculated by subtracting the daylight illuminance from the combined illuminance (footcandles) of the electric lighting and daylight. The daylight illuminance is measured by turning off all nearby lights including the controlled lights.

DRAFT

- For step dimming controls, calculate power consumption using the manufacturer provided cut-sheet information or measure the power consumption.
- (Optional) If a current or power measurement is going to be used in Step 3 to show power reduction under full daylight conditions, collect full load current or power. Note: no power measurements are needed for step switching systems.

Step 3: Full Daylight Test

Simulate or provide bright conditions so that the illuminance (fc) from daylight only at all of the Reference Location(s) identified in Step 1 is greater than 150% of the corresponding Reference Illuminance(s) documented in Step 2.

- Simulating a bright condition can be accomplished by opening all shading devices to allow natural daylight into the space, or

- If natural conditions are not adequate at the time of the test, shine a bright flashlight or other light source onto the photosensor, or
- Temporarily change the setpoint to a very low value for the duration of this test then return the setpoint to its normal settings.

Verify and document the following:

- Lighting power reduction of controlled luminaires is at least 65% of rated power consumption. Methods of doing this include:
- For switching systems at least 2/3s of the lamps are turned off.
  - Note: for switching systems, power measurement is unnecessary. The fraction of power reduction is easily estimated without taking power measurements. The fraction of power reduction is calculated by counting the number of lamps that are switched off versus the total number of lamps providing general lighting in the daylit area.
- For stepped dimming systems, either calculate the fraction of rated power at the dimming stage from the ballast manufacturer's cut sheet or from power measurements taken during the No daylight and full daylight tests.
  - If using the manufacturer's cut-sheet, wattage at full output and dimmed amounts are given. A copy of this cut-sheet must be attached to the acceptance testing form. Count the number of dimmed fixtures and those fully turned off to calculate reduced power operation. If calculated power is 35% or less of the power calculated in step 2, this meets the criteria.
  - If using measured power or current draw of the controlled fixtures. If measured power or current draw is 35% or less the value from Step 2, the criteria is met.

- Only luminaires in daylit zones (toplit zone, primary sidelit zone and secondary sidelit zone) are affected by daylight control.
- Automatic daylight control system reduces the amount of light delivered to the space relatively uniformly as per Section 131(b).
  - All lights are dimmed
  - Alternating lamps, alternative fixtures or alternating rows of fixtures are turned off.
  - Uniformity is improved if fixtures closest to the daylit source are controlled before those further away.
- Stepped dimming control system provides reduced flicker over per Standards Section 119(e)2.

DRAFT

Step 4: Partial daylight test

For each stage of control that is tested in this step, the control stages with lower setpoints than the stage tested are left ON and those stages of control with higher setpoints are dimmed or controlled off. This step is repeated for up to three stages of control between full on and full dimmed or full off condition.

One of the stages selected for testing should reduce power draw between 30% and 50% of system rated power (for switching systems a stage that turns off between a third and a half of the lamps). That test will help confirm that the system can reduce power between 30% and 50%.

Simulate or provide moderately bright conditions so that each control stage turns on and off or dims. Methods to do this include:

- Adjusting blinds or shades. Note the time delay needs to be disabled to use this method. Slowly increase the daylight illuminance until a stage of lighting turns off. Make note of the total combined and electric lighting illuminance at the Reference Location at the condition just after the stage of lights turned off. Continue increasing daylight illuminance by opening blinds or shades for at least two more stages of control
- Light logging. Leave a logging light meter at the Reference Location(s) for one day with a bright afternoon. The logger should be collecting data on an interval no longer than 1 minute per reading, taking reading on even shorter intervals is recommended.
- Open loop ratio method. If the system is open loop (the light sensor senses mainly daylight) the amount of daylight in the space is proportional to the amount measured at the open loop sensor. Adjust setpoint until control turns lights off or are dimmed. Make note of daylight illuminance at the reference location and control setpoint or sensor illuminance display.
    - If the sensor measures 300 fc while there is 30 fc of daylight at the Reference Location, the ratio of Sensed fc to fc at Reference Location is 10 to 1. If the needed daylight illuminance is 50 fc a setpoint of 500 sensed fc is deemed to provide control at 50 fc.

DRAFT

Verify and document the following for each tested control stage:

Note: The tests do not need to be performed for more than three stages of control.

- The total daylight and electric lighting illuminance level measured at its Reference Location just after the stage of control dims or shuts off the stage of lighting.

The total measured illumination shall be no less than the than the Reference Illuminance measured at this location during the No Daylight test documented in Step 2.

The total measured illumination shall be no greater than 150% of the Reference Illuminance.

- The control stage shall not cycle on and off or cycle between dim and undimmed while daylight illuminance remains constant.

Note: cycling is prevented by having a deadband that is sufficiently large. The deadband or the difference between the setpoint for turning the control stage ON and the setpoint for turning that control stage OFF. The deadband must be greater than the sensor measurement of the controlled lighting to prevent cycling of lamps on and off.

Note that for manual testing of the control that the time delay is overridden so it is quickly apparent if the deadband is set appropriately.

If the deadband is too small, the system will cycle. This will be an annoyance and may lead to the system being disabled by irritated occupants.

If the deadband is set too large, the system will not save as much energy as it could.

To manually set a deadband adjust the daylight level or the setpoint so that the setpoint matches the daylight illuminance. Reduce the deadband until the system cycles and then increase the deadband until the system stops cycling.

Step 5: Verify time delay

- Verify that time delay automatically resets to normal mode within 60 minutes of being over ridden.
- Set normal mode time delay to at least three minutes.
- Confirm that there is a time delay of at least 3 minutes between the time when illuminance exceeds the setpoint for a given dimming stage and when the control dims or switches off the controlled lights.
  - Note: One can force a change of state and by dropping the setpoint substantially and timing how long it takes for the control stage to switch off or dim.

DRAFT

10.7.3 ~~NJ~~NA7.6.2 Occupancy Sensor Acceptance

At-a-Glance

~~NJ~~NA7.6.2 Occupancy Sensor Acceptance Use Form LTG-2-A
Purpose of the Test
The purpose of the test is to ensure that occupancy sensors are located, adjusted, and wired properly to achieve the desired lighting control. There are three basic technologies utilized in most occupancy sensors: 1) infrared; 2) ultrasonic; and 3) a combination of infrared and ultrasonic.
Benefits of the Test
Occupancy sensors are used to automatically turn lights ON immediately when a space is occupied, and automatically turn them OFF when the space is vacated after a pre-set time delay. Some sensors are configured so the user must manually switch the lights ON but the sensor will automatically switch the lights OFF (manual on controls). Automated lighting controls prevent energy waste from unnecessarily lighting an unoccupied space.
Instrumentation
This test verifies the functionality of installed occupancy sensors visually and does not require special instrumentation.
Test Conditions
Occupancy sensors are installed properly, and located in places that avoid obstructions and minimize false signals. All luminaires are wired and powered. During the test, the space remains unoccupied. Document the initial conditions before overrides or manipulation of the BAS. All systems must be returned to normal at the end of the test.
Estimated Time to Complete
Construction Inspection: 0.25 to 0.5 hours (depending on visual and audible inspection requirements) **Equipment Test**: 0.5 to 1 hours (depending on necessity to adjust time delay or mask sensor to prevent false triggers)
Acceptance Criteria
Standard occupancy sensor responds to “typical” occupant movement to turn the lights ON immediately. Manual ON occupancy sensor requires occupant to switch lighting on. Ultrasonic occupancy sensors do not emit audible sound. Lights controlled by the occupancy sensor turn OFF when the preset time delay is met. The maximum time delay is not greater than 30 minutes. Occupancy sensor does not trigger a false ON or OFF. Status indicator or annunciator operates correctly.

DRAFT

Potential Issues and Cautions
It is imperative that the test be performed during a time when the tester can have full control over the occupancy of the space.
The time delay can be adjusted to minimize test time, but the time delay setting must be reset upon completion of the test (not to exceed 30 minutes).
Plan sensor location to avoid detection of significant air movement from an HVAC diffuser or other source, which can cause the sensor to turn the lights ON (this is most critical with ultrasonic sensors).
Avoid detection of motion in adjacent areas and unwanted triggers by adjusting coverage pattern intensity or masking the sensor with an opaque material.
Educating the owner about furniture and partition placement in the spaces can avoid future problems with infrared sensor performance (which rely on "line-of-sight" coverage).

10.7.4 Test Procedure: ~~NJ~~NA7.6.2 Occupancy Sensor Acceptance, Use form LTG-2-A

Purpose (Intent) of the Test

The purpose of the test is to ensure that an occupancy sensor is located, adjusted, and wired properly to achieve the desired lighting control. Occupancy sensors are used to automatically turn lights on and keeps them on when a space is occupied, and turn them off automatically when the space is unoccupied after a reasonable time delay. The time delay, typically adjustable, will prevent lights from short cycling ON and OFF as spaces are occupied and unoccupied frequently. There are three basic technologies utilized in most occupancy sensors: 1) infrared; 2) ultrasonic; and 3) a combination of infrared and passive sonic detection.

Construction Inspection

Occupancy sensor has been located to minimize false signals (both false ON and OFF). False signals can include, but is not limited to:

- Detection of motion in adjacent areas outside of desired control area. Coverage pattern intensity adjustment or sensor masking may be needed to prevent detection outside of the desired control area. Occupancy sensors are positioned so they "look" across the doorway not through it.
- Detection of heavy air flow. This can be prevented by locating a sensor more than 6 feet away from an HVAC diffuser or other source of air movement (this is most critical with ultrasonic sensors). The sensitivity of the sensor can also be adjusted to minimize false signals due to air movement.
- Occupancy sensor does not encounter obstructions that could adversely affect desired performance, including but not limited to: walls, partitions (temporary or permanent), office furnishings (desks, book cases, filing cabinets, plants), or doors. Note that obstruction limitations are more critical when using infrared occupancy sensors

DRAFT

since this technology relies on "line-of-sight" coverage. Ultrasonic sensors are less susceptible to obstructions.

- Ultrasonic sensors do not emit audible sound. As the name implies, ultrasonic sensors emit ultrasonic sound waves at frequencies that should be imperceptible to the human ear. Ensure the sensor does not emit any sounds that ARE audible to the human ear at typical occupant location.
- Regular noise in the room (such as HVAC noise) does not result in passive sonic detection keeping lights on. The sensitivity of the sensor can also be adjusted to minimize false signals due to regularly occurring noises.

~~Equipment~~ Functional Testing

Step 1: Simulate an unoccupied condition. Ensure the space being tested remains unoccupied during the test and wait for the lights to turn off (sensor delay time can be adjusted to shorten test time).

Verify and Document

Lights controlled by the occupancy sensor turn off when the time delay is met. If the time delay was not adjusted prior to the test, ensure the maximum delay was not greater than 30 minutes. If the time delay was adjusted to minimize test time, ensure the sensor time delay setting does not exceed 30 minutes.

Occupancy sensor does not trigger a false ON. Ensure that any movement outside the desired control zone does not activate the lights. Examples include:

- Walking past an open door of an enclosed office
- Walking in an adjacent zone close to the control zone
- Movement other than occupants (i.e. air flow from HVAC system or furnishing movement due to external forces)

Step 2: For a representative sample of building spaces, simulate an occupied condition. Enter the test space.

Verify and Document

Ensure the lights in the control zone turn on immediately. Note that some applications may use an occupancy sensor in conjunction with an automatic control switch, which allows the occupant to manually turn ON/OFF the lights or allow them to automatically turn off when the space is unoccupied (automatic OFF and manual ON control strategy). In this case, activation of the control switch should enable the lights and they should stay illuminated while the space is occupied. The occupancy sensors that are required to have "manual on" capability are identified on the Lighting Control Worksheet.

Signal sensitivity is adequate to achieve the desired control. Ensure occupancy sensor responds to "typical" occupant movement to trigger lights back on. This may require remaining in the space throughout the time delay period to ensure the occupancy sensor continues to recognize the space is occupied. "Typical" movement pertains to the activities one may expect for the space being served, for example: light desk work; casual walking; athletic movement (i.e. fitness rooms); sitting at rest (i.e. lunch/break room).

DRAFT

Status indicator or annunciator operates correctly. Most occupancy sensors have an LED that will illuminate (typically flash) when motion is detected, where others may emit an audible sound.

Step 3: Return system back to normal operating condition. Ensure all schedules, setpoints, operating conditions, and control parameters (especially time delays) are placed back at their initial conditions.

10.7.5 ~~NJ~~NA7.6.3 Manual Daylighting Control Acceptance

At-a-Glance

N~~A7J~~.6.3 Manual Daylighting Control Acceptance Use Form LTG-2-A
Purpose of the Test
The purpose of this test is to ensure that spaces exempt from the automatic daylighting control requirements (refer to §131(c)2) are capable of achieving reduced lighting levels manually under bright conditions. Manual lighting controls can include, but are not limited to, switches and dimmers.
Benefits of the Test
Reducing artificial light output when adequate daylight is available improves overall light quality and reduces energy usage.

Instrumentation
To perform the test, it will be necessary to validate overall power reduction. The instrumentation needed to perform the task may include, but is not limited to: Light meter Hand-held amperage and voltage meter Power meter Dimming ballast manufacturer's light versus power curve
Test Conditions
The luminaires within each space are wired to manual switches and/or dimmers. All luminaires are wired and powered.

DRAFT

Estimated Time to Complete
Construction Inspection: 0.25 to 0.5 hours (depending on access to necessary construction documentation – i.e. electrical drawings, material cut sheets, etc.) **Equipment Test**: 0.5 to 2 hours (depending on method employed for verifying required power reduction)
Acceptance Criteria
Manual switching or dimming achieves a lighting power reduction of at least 50% within the control zone. The amount of light delivered to the control zone is uniformly reduced. For the dimming controls, the lamps do not "flicker" at a reduced light output condition.
Potential Issues and Cautions
Verifying required power reduction can be difficult when using dimmers. One method is to measure power (either directly or by calculating power using measured volts and amps) at maximum and minimum dimmer positions. Another method would be to measure light level at maximum and minimum dimmer positions and compare these values with ballast manufacturer's published data on input power vs. percent light output. Uniform reduction in light level is subjective when lights are controlled by switches. Switching two of four lamps in a 4-lamp luminaire or having the center lamp and two outside lamps in a 3-lamp luminaire on separate switches are reasonable examples of "uniform" lighting.

DRAFT

10.7.6 Test Procedures: ~~NJ~~NA7.6.3 Manual Daylighting Control Acceptance, Use form LTG-2-A

Purpose (Intent) of the Test

When the total daylit area in an enclosed space is greater than 250 sf and has adequate daylight. Controls must be installed which are capable of reducing the amount of electric lighting in the daylit areas. The purpose of this test is to ensure that spaces not required to have automatic daylighting control are capable of achieving reduced lighting levels manually. Manual lighting control can include, but is not limited to, switches and dimmers. The lights must be controlled separately from lights outside the daylit area.

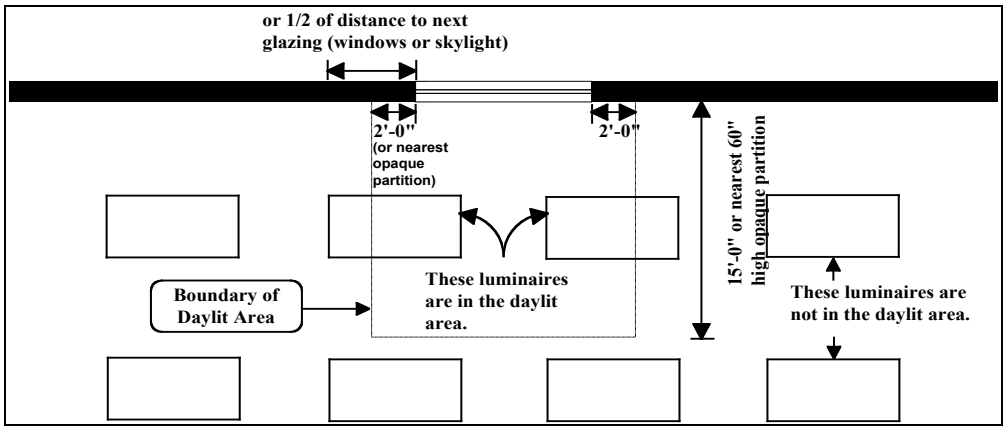

Figure 10-6 – Window Daylit Area

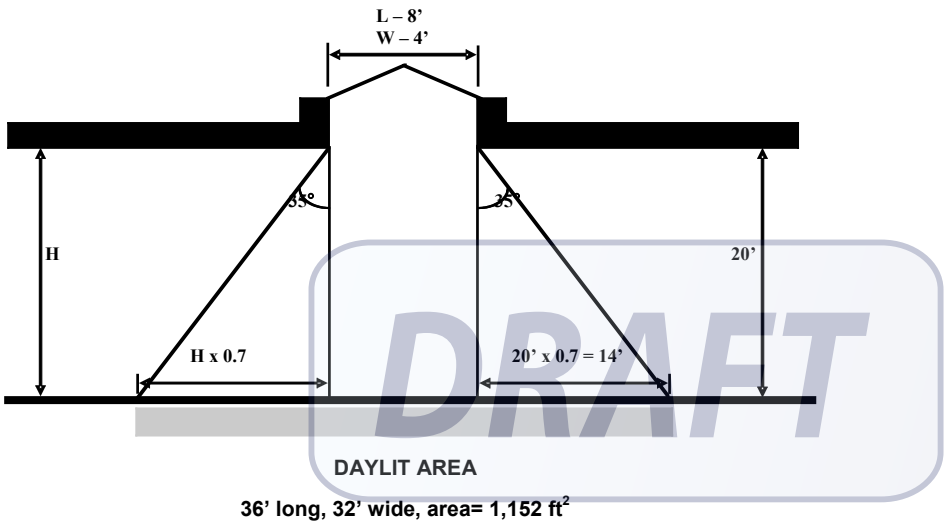

Figure 10-7 – Elevation View of Daylit Area under Skylight

Construction Inspection

If dimming ballasts are specified for light fixtures within the daylit area, ensure they meet all Standards requirements, including "reduced flicker operation" for manual dimming control systems. Flicker refers to a rapid fluctuation in light output that can be detected by the human eye.

~~Equipment~~ Functional Testing

Step 1: Perform manual switching control. Ensure the lights within each space are controlled correctly. Acceptable control includes, but is not limited to, toggle switches or dimmers.

Verify and Document

Manual switching or dimming achieves a lighting power reduction of at least 50% within the control zone. For toggle switch controls, this implies that at least

50% of the lamps (not necessarily fixtures) serving the control zone should be connected to common switches and can be turned off. It is implied that 50% power reduction is achieved if 50% of the lamps have been turned off (i.e. two of four lamps in a 4-lamp fixture). For dimmers, it is more likely that all of the fixtures and lamps within the control zone will be controlled simultaneously. Verifying power reduction using dimmer control can include, but is not limited to:

- Measure maximum light output (minimum dimmer position) and minimum light output (maximum dimmer position) to calculate a percent output value and compare this value with manufacturer's specified power input at that percent light output. If lights are hard to reach, turn off lights to measure daylight footcandles and subtract daylight footcandles from maximum and minimum measurements of lights at full power and lights fully dimmed. Most ballast manufacturers will provide a curve illustrating the ballast input power vs. percent light output. If input power at maximum dimmer position achieves a 50% power reduction over minimum dimmer position, the system passes.
- Measure input power to the fixture at both full and minimum dimmer positions. The difference between the two measurements determines power reduction (it is acceptable to measure input amps and voltage and calculate power).

The amount of light delivered to the control zone is uniformly reduced. The intent of this requirement is to prevent severe contrasts in illumination within the space because occupants may override the system if uneven light distribution is an annoyance. For switch control, examples of uniform illuminance include: two of four lamps in a fixture are turned off; center lamp or two outside lamps in 3-lamp fixtures are turned off; or lamps closest to the daylight source turn off completely but those further away remain operating. As stated above, dimmer applications will typically control all of the lights in the control zone uniformly, but variation may occur depending on how the fixtures are actually wired.

Step 2: Return system back to normal operating condition. Ensure all schedules, setpoints, operating conditions, and control parameters are placed back at their initial conditions.

DRAFT

10.7.7 ~~NJ~~NA7.6.4 Automatic Time Switch Control Acceptance

At-a-Glance

~~NJ~~NA7.6.4 Automatic Time Switch Control Acceptance Use Form LTG-2-A
Purpose of the Test
The purpose of this test is to ensure that all non-exempt lights, per Standards Section 131(d)1, are automatically turned off at a predetermined time and individual lighting circuits can be manually enabled, if necessary, during scheduled OFF periods (i.e., a lighting "sweep").
Benefits of the Test
Automated controls to turn off lighting during typically unoccupied periods of time prevents energy waste.
Instrumentation
This test verifies the functionality of installed automatic time switch controls visually and does not require special instrumentation.
Test Conditions
All luminaires and override switches controlled by the time switch control system must be wired and powered. Lighting control system must be installed and ready for system operation, including completion of all start-up procedures, per manufacturer's recommendations. Preferably, the space is unoccupied during the test to prevent conflicts with other trades. Document the initial conditions before overrides or manipulation of the BAS. All systems must be returned to normal at the end of the test.
Estimated Time to Complete
Construction Inspection: 0.5 to 2 hours (depending on familiarity with lighting control programming language) **Equipment Test**: 2 to 6 hours (depending on familiarity with lighting control programming language, number of lighting circuits and override switches to be tested, and programmed time delay between ON and OFF signals)

DRAFT

Acceptance Criteria
Automatic time switch controls are programmed with acceptable weekday, weekend, and holiday schedules, per building occupancy profile. The correct date and time are properly set in the lighting controller. The battery back-up is installed and energized and is capable of retaining system programming for at least 10 hours if power is interrupted. All lights can be turned ON manually or turn ON automatically during the occupied time schedule. All lights turn OFF at the preprogrammed, scheduled times. The manual override switch is functional and turns associated lights ON when activated. Override time limit is no more than two hours, except for spaces exempt per §131(d)2.D. Enunciator warning the occupants that the lights are about to turn OFF functions correctly.
Potential Issues and Cautions
The manual override time limit can be adjusted to minimize test time, but the time limit setting must be reset upon completion of the test (not to exceed two hours). It is preferable to perform the test when the spaces are unoccupied. Turning the lights OFF when other occupants are present can cause problems and unsafe working conditions.

Purpose (Intent) of the Test

The purpose of this test is to ensure that all non-exempt lights per §131(a) are automatically turned off at a predetermined time and individual lighting circuits can be manually enabled, if necessary, during scheduled OFF periods. The most common term for this control strategy is a lighting "sweep".

DRAFT

Construction Inspection

- Automatic time switch control is programmed with acceptable weekday, weekend, and holiday schedules. Non-exempt lights should be scheduled OFF a reasonable time after the space is typically unoccupied (i.e., 1 or 2 hours after most people have already left the space).
- Verify schedule and other programming parameter documentation was provided to the owner. This information will be used to verify system operation. The documentation should include weekday, weekend, and holiday schedules as well as sweep frequency and/or override time period. Sweep frequency or override time period refers to how often the OFF signal is sent through the system and commands the lights OFF again.
- Verify correct date and time is properly set in the time switch. Lights will not be controlled correctly if the programmed date and time do not match actual values.
- Verify the battery is installed and energized. Battery back-up should be capable of retaining system programming for at least 10 hours if power is interrupted.

- Override time limit is no more than 2 hours. When the lights are switched off, each lighting circuit can be turned back on manually. Most systems will either send out another OFF signal through the entire lighting network to command all lights back off, or consist of an override timer that will expire and turn off the lights that were manually turned on. Regardless of the control strategy, lights that were manually turned ON during an OFF period should only be operating for up to 2 hours before they are automatically turned off again.
- Verify that override switch is readily accessible and located so that a person using the device can see the lights being controlled--for example, individual override switch per enclosed office or centrally located switch when serving an open office space.

~~Equipment~~ Functional Testing

Step 1: Simulate occupied condition. Set ON time schedule to include actual time or adjust time to be within the ON time schedule (whichever is easier).

Verify and Document

- All lights can be enabled. Some systems may turn the lights on automatically at the scheduled time, but others may require that lights be turned on manually using their respective area control switch.
- Verify the local lighting circuit switch only operates lights in the area in which the switch is located. This is particularly important in enclosed spaces to ensure only lights within the enclosed space are controlled. However, switches serving open spaces should also control only lights in the designated zone.

Step 2: Simulate unoccupied condition. Set the OFF time schedule to include the actual time, or adjust the time to be within the OFF time schedule (whichever is easier).

DRAFT

Verify and Document

- All non-exempt lights turn off. Most systems warn occupants that the lights are about to turn off by sending a pulse through the lighting circuits to “flicker” the lights or provide another form of visual or audible annunciation.
- Manual override switch is functional. Enabling the manual override switch allows only the lights in the selected space where the switch is located to turn ON. This is particularly important in enclosed spaces to ensure only lights within the enclosed space are controlled, however, switches serving open spaces should also control only lights in the designated zone. The lights should remain ON throughout the override time period (refer to §131(d)2.D for maximum override times) and the system indicates that the lights are about to be turned off again.
- All non-exempt lights turn off when the next OFF signal is supplied to the lighting control circuits or the override time has expired. In order to reduce testing time associated with the complete OFF-Manual override-OFF sequence, it is recommended that the override time be shortened so that the entire sequence can be witnessed within a reasonable amount of time.

Step 3: Return system back to normal operating condition. Ensure all schedules, setpoints, operating conditions, and control parameters are placed back at their initial conditions. Ensure the override time period is no more than two hours.

It is also good practice to leave a schedule in the timeclock itself for easy reference and to leave a blank schedule form so that the users can document any schedule changes. See the example below.

10.8 Envelope and Mechanical Forms for Acceptance Requirements

There are two new envelope forms ~~eight~~ fifteen mechanical forms used to document the completion of these procedures. Each form includes a series of check boxes relating to each test or verification that needs to be performed. When completing the forms, check the appropriate box on the form after each test or verification is completed. Where the form includes data entry locations other than check boxes, enter the data requested on the form. These forms are located in Appendix A:

Envelope

ENV-1A – Certificate of Acceptance
ENV-2A- Fenestration Acceptance

Mechanical

DRAFT

MECH-1A – Certificate of Acceptance
MECH-2A - Ventilation Systems - Variable and Constant Volume Systems
MECH-3A – Constant-Volume, Single-Zone, Unitary A/C and Heat Pumps
MECH-4A - Air Distribution Systems -
MECH-5A – Air Economizer Controls
MECH-6A - Demand Control Ventilation (DVC)
MECH-7A - Supply Fan Variable Flow Controls (VFC)
MECH-8A – Valve Leakage Test
MECH-9A - Supply Water Temperature Reset
MECH-10A - Hydronic System Variable Flow Control
MECH-11A - Automatic Demand Shed Control Acceptance
MECH-12A - Fault Detection & Diagnostics for DX Units
MECH-13A - Automatic Fault Detection & Diagnostics for Air Handling & Zone Terminal Units
MECH-14A - Distributed Energy Storage DX AC Systems Test
MECH-15A - Thermal Energy Storage (TES) Systems

~~•Certificate of Acceptance (3 pages)~~
~~•Ventilation System Acceptance Document~~
~~•Packaged HVAC Systems Acceptance Document~~
~~•Air Distribution Acceptance Document~~
~~•Air-Side Economizer Acceptance Document~~
~~•Demand ControlDemand-controlled Ventilation Acceptance Document~~
~~•Supply Fan Variable Flow Control Acceptance Document~~
~~•Hydronic System Control Acceptance Document~~

•

DRAFT

Envelope

ENV-1A - Certificate of Acceptance Part 1 of 2

The form is separated into two basic sections: project information; general information; and statement of acceptance. Each section consists of a combination of data entry requirements and check boxes.

Project Information

- PROJECT NAME is the title of the project, as shown on the Code Compliance forms.
- DATE is the date of preparation of the compliance submittal package.
- PROJECT ADDRESS is the address of the project as shown on the Code Compliance forms.

- TESTING AUTHORITY is the person responsible for verifying all acceptance tests were performed and each system passed.

General Information

This section consists of a combination of data entry requirements and check boxes, all of which are self-explanatory. Complete check boxes and enter data as instructed.

Statement of Acceptance

This section consists of a combination of check boxes and data entry requirements, including signature; date; and license number. Complete check boxes and enter data as instructed.

ENV-1A - Certificate of Acceptance Part 2 of 2

The form is used to document the overall final results of all acceptance tests.

Summary of Acceptance Tests

- SYSTEM ACCEPTANCE DOCUMENT refers to the name of the test form that has been completed. Typically an individual form is completed for each fenestration product tested.
- TESTING AUTHORITY is the person responsible for verifying all acceptance tests were performed and each system passed.
- DATE OF TEST is the date each test was actually performed.
- PASS/FAIL is the final outcome of the acceptance test.

Mechanical

MECH-1-A - Certificate of Acceptance Part 1 of 2

DRAFT

The form is separated into three basic sections: project information; general information; and statement of acceptance. Each section consists of a combination of data entry requirements and check boxes.

Project Information

- PROJECT NAME is the title of the project, as shown on the Code Compliance forms.
- DATE is the date of preparation of the compliance submittal package.
- PROJECT ADDRESS is the address of the project as shown on the Code Compliance forms.
- TESTING AUTHORITY is the person responsible for verifying all acceptance tests were performed and each system passed.
- TELEPHONE is the phone number where the testing authority can be reached during regular business hours.

General Information

This section consists of a combination of data entry requirements and check boxes, all of which are self-explanatory. Complete check boxes and enter data as instructed.

Statement of Acceptance

This section consists of a combination of check boxes and data entry requirements, including signature; date; and license number. Complete check boxes and enter data as instructed.

MECH-1-A - Certificate of Acceptance Part 2 of 2

The form is used to document the overall final results of all acceptance tests.

Summary of Acceptance Tests

- SYSTEM ACCEPTANCE DOCUMENT refers to the name of the test form that has been completed. For example: "Ventilation System Acceptance document (AHU-1). This designates the acceptance test of ~~outside air~~outdoor air ventilation for air handling unit #1. Typically an individual form is completed for each piece of equipment tested.
- TESTING AUTHORITY is the person responsible for verifying all acceptance tests were performed and each system passed.
- DATE OF TEST is the date each test was actually performed.
- PASS/FAIL is the final outcome of the acceptance test.

MECH-2-A - Ventilation Systems –Variable Air and Constant Volume System Acceptance Document

This form is used to document results of the minimum ~~outside air~~outdoor air ventilation tests for both constant and variable air volume fan systems. A separate form should be completed for each system tested. The form is separated into six basic sections: project information; pre-test inspection; ~~equipment testing~~functional testing; testing calculations and results; pass/fail evaluation; and certification statement. Each section consists of a combination of data entry requirements and check boxes.

DRAFT

Project Information

- PROJECT NAME is the title of the project, as shown on the Code Compliance forms.
- DATE is the date of preparation of the compliance submittal package.
- PROJECT ADDRESS is the address of the project as shown on the Code Compliance forms.
- TESTING AUTHORITY is the person responsible for verifying all acceptance tests were performed and each system passed.
- TELEPHONE is the phone number where the testing authority can be reached during regular business hours.
- VENTILATION SYSTEM NAME/DESIGNATION is the name or unique identifier for the system being tested. For example: AHU-1; AC-3; etc.

Pre-test Inspection

This section consists of check boxes for both constant and variable air volume systems. Complete only the check boxes associated with the appropriate system type.

~~Equipment Testing~~Functional Testing

This section consists of data entry requirements for both constant and variable air volume systems. Enter data associated with the appropriate system type as instructed.

Testing Calculations and Results

This section consists of data entry requirements for both constant and variable air volume systems. Enter data associated with the appropriate system type as instructed.

Pass/Fail Evaluation

Check the appropriate box.

Certification Statement

The statement of compliance is signed by the person responsible for performing the test and verifying system performance. The signatory provides the following: name; company name; signature and date signed; as well as license number and expiration date.

MECH-3-A - ~~Packaged HVAC System~~Constant volume, Single-Zone, Unitary Air Conditioning and Heat Pumps Acceptance Document

This form is used to document results of packaged HVAC system operating tests. A separate form should be completed for each system tested. The form is separated into seven basic sections: project information; pre-test inspection; operating modes; ~~equipment testing~~functional testing requirements; testing results; pass/fail evaluation; and certification statement. Each section consists of a combination of data entry requirements and check boxes.

DRAFT

Project Information

- PROJECT NAME is the title of the project, as shown on the Code Compliance forms.
- DATE is the date of preparation of the compliance submittal package.
- PROJECT ADDRESS is the address of the project as shown on the Code Compliance forms.
- TESTING AUTHORITY is the person responsible for verifying all acceptance tests were performed and each system passed.
- TELEPHONE is the phone number where the testing authority can be reached during regular business hours.
- PACKAGED HVAC NAME/DESIGNATION is the name or unique identifier for the system being tested. For example: ACU-1; DX-3; etc.

Pre-test Inspection

This section consists of check boxes. Complete check boxes as instructed.

Operating Modes

This section documents the various operating modes for packaged HVAC systems under which they will be tested. Note that operating modes "F" and "G" are associated with systems that do not have an economizer and operating modes.

~~Equipment Testing~~Functional Testing

This section consists of check boxes arranged in a matrix pattern, with the various operating modes listed horizontally and expected system responses listed vertically. As the HVAC system is tested under each applicable operating mode, check the box associated with the expected system response. Again, note that operating modes "F" and "G" are mutually exclusive with operating modes~~-~~ "H" and "I". If the unit does not have an economizer, only modes "F" and "G" should be checked. Conversely, "H" and "I" are used only for systems with an economizer.

Testing. Results

This section consists of data entry requirements for all operating modes. Enter data associated with the appropriate operating mode as instructed.

Pass/Fail Evaluation

Check the appropriate box as instructed.

Certification Statement

The statement of compliance is signed by the person responsible for performing the test and verifying system performance. The signatory provides the following: name; company name; signature and date signed; as well as license number and expiration date.

DRAFT

MECH-4-A ~~– Economizer~~Air Distribution Systems Acceptance Document

This form is used to document results of both stand-alone and DDC controlled economizer operating tests. A separate form should be completed for each system tested. The form is separated into six basic sections: project information; pre-test inspection; ~~equipment testing~~functional testing requirements; testing results; pass/fail evaluation; and certification statement. Each section consists of a combination of data entry requirements and check boxes.

Project Information

- PROJECT NAME is the title of the project, as shown on the Code Compliance forms.
- DATE is the date of preparation of the compliance submittal package.

- PROJECT ADDRESS is the address of the project as shown on the Code Compliance forms.
- TESTING AUTHORITY is the person responsible for verifying all acceptance tests were performed and each system passed.
- TELEPHONE is the phone number where the testing authority can be reached during regular business hours.
- AIR ECONOMIZER NAME/DESIGNATION is the name or unique identifier for the economizer being tested (typically associated with a particular HVAC system). For example: AC-1; AHU-3; etc.

Pre-test Inspection

This section consists of check boxes for both stand-alone and DDC controlled economizers. Complete the appropriate check boxes as instructed.

~~Equipment Testing~~Functional Testing

- This section consists of check boxes for each test procedure. Complete check boxes as instructed.

Testing Results

- This section consists of data entry requirements for all tests. Enter data as instructed.

Pass/Fail Evaluation

- Check the appropriate box as instructed.

Certification Statement

- The statement of compliance is signed by the person responsible for performing the test and verifying system performance. The signatory provides the following: name; company name; signature and date signed; as well as license number and expiration date.

MECH-5~~-~~A - Air Economizer~~Distribution~~ Acceptance Document

This form is used to document results of duct leakage tests performed on specific packaged HVAC systems. A separate form should be completed for each system tested. The form is separated into five basic sections: project information; pre-test inspection; ~~equipment testing~~functional testing requirements; pass/fail evaluation; and certification statement. Each section consists of a combination of data entry requirements and check boxes.

DRAFT

Project Information

- PROJECT NAME is the title of the project, as shown on the Code Compliance forms.
- DATE is the date of preparation of the compliance submittal package.
- PROJECT ADDRESS is the address of the project as shown on the Code Compliance forms.
- TESTING AUTHORITY is the person responsible for verifying all acceptance tests were performed and each system passed.

- TELEPHONE is the phone number where the testing authority can be reached during regular business hours.
- AIR DISTRIBUTOR NAME/DESIGNATION is the name or unique identifier for the ductwork being tested (typically associated with a particular HVAC system). For example: ACU-1 ductwork; etc.

Construction Inspection

- This section consists of check boxes. Complete check boxes as instructed.

Certification Statement

- The statement of compliance is signed by the person responsible for performing the test and verifying system performance. The signatory provides the following: name; company name; signature and date signed; as well as license number and expiration date.

This form is used to verify duct tightness by the installer and/or HERS rater (third-party). Compliance credit requires third-party field verification.

Installer Certification

NEW CONSTRUCTION

- ENTER TEST LEAKAGE– enter the actual measured duct leakage value.
- FAN FLOW

  CALCULATED FAN FLOW – enter the calculated fan flow either by multiplying 400cfm/ton times the number of tons of cooling or by entering 21.7 times the heating capacity of the unit being stalled in kBtu/h. In case of more than one separate fan flow unit calculate the fan flow for each separately and enter the value in the Measured Values column.

  MEASURED FAN FLOW – enter the actual fan flow measured value in the Measured Values column.

- LEAKAGE PERCENTAGE – enter the leakage fraction by dividing the Test Leakage by either the calculated or measured fan flow. Enter the value in the Measured Values column.

  PASS OR FAIL – check the “Pass” box if duct leakage is less than 6 %.

ALTERATIONS

- ENTER PRE-TEST LEAKAGE FLOW - enter the actual measured duct leakage value for existing ductwork where the single-zone unit is being replaced or having a major component replaced (§149(b)E) including:

DRAFT

- Cooling coil
- Furnace
- Condenser coil (split system) or
- Condensing unit (split system)

Different levels of leakage requirements apply to new and existing ductwork (see §149(b)D).

- ENTER FINAL TEST FOR LEAKAGE - enter the actual measured duct leakage value after alterations are complete. There are three options for meeting the leakage requirements.
- The measured duct leakage shall be less than 15% of fan flow; or
    - The duct leakage shall be reduced by more than 60% relative to the leakage prior to the equipment having been replaced and a visual inspection shall demonstrate that all accessible leaks have been sealed; or
    - If it is not possible to meet the duct sealing requirements of Subsections a. or b., all accessible leaks shall be sealed and verified through a visual inspection by a certified HERS rater.

DRAFT

EXCEPTION to Section 149(b)1Dii: Existing duct systems that are extended, which are constructed, insulated or sealed with asbestos.

Otherwise check the "Fail" box. See §149(b)1D for additional applicable information.

- ENTER REDUCTION IN LEAKAGE – This is option b. from above. If the leakage after the alteration is reduced by 60% then the system passes.
- NEW DUCTS – If all the ducts are new the leakage must not be over 6%. Enter ~~this values~~these values here.
- TEST OR VERIFICATION STANDARDS
    - Leakage Percentage must be less than 15%. After the alteration the duct leakage must be less than 15% of fan flow.
    - Leakage Reduction - If a Pre-Test was conducted on the system before any alterations the final test after the alteration must less than 60%.
    - If none of the above options a HERS rater can test the duct system to verify by smoke test that all accessible leaks have been sealed.
- SIGNATURE AND DATE – enter the signature of the installer and date of the test.
- NAME OF INSTALLING CONTRACTOR OR SUBCONTRACTOR – enter the name of the company of the contractor of subcontractor.

HERS Rater Compliance Statement

The HERS rater fills out the following information:

- HERS RATER INFORMATION
    - HERS Rater – Rater prints name and telephone number.
    - CERTIFYING SIGNATURE – After tests passes the HERS Rater signs and dates form.
    - FIRM – Enter company name
    - SAMPLE GROUP NUMBER – Enter sample number here. Example, System 3 out of 7.
- ENTER TEST LEAKAGE– enter the actual measured duct leakage value.
- FAN FLOW
    - CALCULATED FAN FLOW – enter the calculated fan flow either by multiplying 400cfm/ton times the number of tons of cooling or by entering 21.7 times the heating capacity of the unit being stalled in kBtu/h. In case of more than one separate fan flow unit calculate the fan flow for each separately and enter the value in the Measured Values column.
    - MEASURED FAN FLOW – enter the actual fan flow measured value in the Measured Values column.
- LEAKAGE PERCENTAGE – enter the leakage fraction by dividing the Test Leakage by either the calculated or measured fan flow. Enter the value in the Measured Values column.
    - PASS OR FAIL – check the "Pass" box if duct leakage is less than 6 %.

DRAFT

ALTERATIONS

- ENTER PRE-TEST LEAKAGE FLOW - enter the actual measured duct leakage value for existing ductwork where the single-zone unit is being replaced or having a major component replaced (§149(b)E) including:
    - Cooling coil
    - Furnace
    - Condenser coil (split system) or
    - Condensing unit (split system)

Different levels of leakage requirements apply to new and existing ductwork (see §149(b)D).

- ENTER FINAL TEST FOR LEAKAGE - enter the actual measured duct leakage value after alterations are complete. There are three options for meeting the leakage requirements.

- The measured duct leakage shall be less than 15% of fan flow; or
- The duct leakage shall be reduced by more than 60% relative to the leakage prior to the equipment having been replaced and a visual inspection shall demonstrate that all accessible leaks have been sealed; or
- If it is not possible to meet the duct sealing requirements of Subsections a. or b., all accessible leaks shall be sealed and verified through a visual inspection by a certified HERS rater.

EXCEPTION to Section 149(b)1Dii: Existing duct systems that are extended, which are constructed, insulated or sealed with asbestos.

Otherwise check the "Fail" box. See §149(b)1D for additional applicable information.

- ENTER REDUCTION IN LEAKAGE – This is option b. from above. If the leakage after the alteration is reduced by 60% then the system passes.
- NEW DUCTS – If all the ducts are new the leakage must not be over 6%. Enter this value here.
- TEST OR VERIFICATION STANDARDS

  - Leakage Percentage must be less than 15%. After the alteration the duct leakage must be less than 15% of fan flow.
  - Leakage Reduction - If a Pre-Test was conducted on the system before any alterations the final test after the alteration must less than 60%.
  - If none of the above options a HERS rater can test the duct system to verify by smoke test that all accessible leaks have been sealed.

DRAFT

MECH-6-A - ~~Demand Control~~Demand~~- Ceontrolled~~ Ventilation Systems Acceptance Document

This form is used to document results of operational tests for HVAC systems required to utilize demand ventilation control. A separate form should be completed for each system tested. The form is separated into six basic sections: project information; pre-test inspection; ~~equipment testing~~functional testing requirements; testing results; pass/fail evaluation; and certification statement. Each section consists of a combination of data entry requirements and check boxes.

Project Information

- PROJECT NAME is the title of the project, as shown on the Code Compliance forms.
- DATE is the date of preparation of the compliance submittal package.
- PROJECT ADDRESS is the address of the project as shown on the Code Compliance forms.
- TESTING AUTHORITY is the person responsible for verifying all acceptance tests were performed and each system passed.

- TELEPHONE is the phone number where the testing authority can be reached during regular business hours.
- ~~DEMAND CONTROL~~DEMAND -CONTROLLED VENTILATION NAME/DESIGNATION is the name or unique identifier for the HVAC unit utilizing ventilation control that is being tested. For example: AC-1; AHU-3; etc.

Pre-test Inspection

- This section consists of check boxes. Complete check boxes as instructed.

~~Equipment Testing~~Functional Testing

- This section consists of both check boxes and data entry for each test procedure. Complete all check boxes and enter data as instructed.

Testing Results

- This section consists of data entry requirements for all tests. Enter data as instructed.

Pass/Fail Evaluation

- Check the appropriate box as instructed.

Certification Statement

The statement of compliance is signed by the person responsible for performing the test and verifying system performance. The signatory provides the following: name; company name; signature and date signed; as well as license number and expiration date.

DRAFT

MECH-7-A - Supply Fan Variable Flow Control Acceptance Document

This form is used to document results of operational tests for HVAC supply fans required to utilize variable flow control. A separate form should be completed for each system tested. The form is separated into seven basic sections: project information; pre-test inspection; ~~equipment testing~~functional testing requirements; test calculations; testing results; pass/fail evaluation; and certification statement. Each section consists of a combination of data entry requirements and check boxes.

Project Information

- PROJECT NAME is the title of the project, as shown on the Code Compliance forms.
- DATE is the date of preparation of the compliance submittal package.
- PROJECT ADDRESS is the address of the project as shown on the Code Compliance forms.
- TESTING AUTHORITY is the person responsible for verifying all acceptance tests were performed and each system passed.
- TELEPHONE is the phone number where the testing authority can be reached during regular business hours.

- VARIABLE FREQUENCY DRIVE NAME/DESIGNATION is the name or unique identifier for the supply fan that is being tested (typically associated with a particular HVAC system). For example: SF-1 in ACU-1; SF-2 in AHU-3 (multiple fan unit); etc.

Pre-test Inspection

- This section consists of check boxes. Complete check boxes as instructed.

~~Equipment Testing~~Functional Testing

- This section consists of data entry requirements for each test procedure. Enter data as instructed.

Test Calculations

- This section consists of data entry requirements for all tests. Enter data as instructed.

Testing Results

- This section consists of data entry requirements for all tests. Enter data as instructed.

Pass/Fail Evaluation

- Check the appropriate box as instructed.

Certification Statement

- The statement of compliance is signed by the person responsible for performing the test and verifying system performance. The signatory provides the following: name; company name; signature and date signed; as well as license number and expiration date.

DRAFT

MECH-8-A ~~–~~Valve Leakage Test ~~Hydronic System~~ Acceptance Document

This form is used to document the results for various hydronic system operating tests. The form was designed so that data from up to five hydronic systems (for example: chilled water; heating hot water; water-loop heat pump; etc.) could be recorded on one form. The form is separated into seven basic sections: project information; pre-test inspection; system type; select acceptance tests; ~~equipment testing~~functional testing requirements; pass/fail evaluation; and certification statement. Each section consists of a combination of data entry requirements and check boxes.

Project Information

- PROJECT NAME is the title of the project, as shown on the Code Compliance forms.
- DATE is the date of preparation of the compliance submittal package.
- PROJECT ADDRESS is the address of the project as shown on the Code Compliance forms.
- TESTING AUTHORITY is the person responsible for verifying all acceptance tests were performed and each system passed.

- TELEPHONE is the phone number where the testing authority can be reached during regular business hours.
- HYDRONIC SYSTEM NAME/DESIGNATION is the name or unique identifier for the system(s) being tested. For example: Chilled water; heating hot water; water-loop heat pump; etc.

Pre-test Inspection

- This section consists of check boxes. Complete check boxes as instructed.

System Type

- This section documents the various system that will be tested. There are five columns under the "System ID" heading labeled 1 through 5 and are identified as follows: column 1 – chilled water systems; column 2 – heating hot water systems; column 3 – water-loop heat pumps; and column 4 and column 5 – other system types. Check each system type that is tested in the appropriate column.

Select Acceptance Test

- This section documents which of the various acceptance tests will be performed for each system type. Check the appropriate column for each test that applies to the respective system type.

~~*Equipment Testing*~~*Functional Testing*

- This section consists of check boxes and data entry requirements arranged by individual test. Check each box or enter data in each System ID column for which the specific test applies.

Pass/Fail Evaluation

- Check the appropriate box as instructed.

Certification Statement

- The statement of compliance is signed by the person responsible for performing the test and verifying system performance. The signatory provides the following: name; company name; signature and date signed; as well as license number and expiration date.

DRAFT

MECH-9A - Supply Water Temperature Reset

- PROJECT NAME is the title of the project, as shown on the Code Compliance forms.
- DATE is the date of preparation of the compliance submittal package.
- PROJECT ADDRESS is the address of the project as shown on the Code Compliance forms.

- TESTING AUTHORITY is the person responsible for verifying all acceptance tests were performed and each system passed.

MECH-10A - Hydronic System Variable Flow Control

- PROJECT NAME is the title of the project, as shown on the Code Compliance forms.
- DATE is the date of preparation of the compliance submittal package.
- PROJECT ADDRESS is the address of the project as shown on the Code Compliance forms.
- TESTING AUTHORITY is the person responsible for verifying all acceptance tests were performed and each system passed.

MECH-11A - Automatic Demand Shed Control Acceptance

- PROJECT NAME is the title of the project, as shown on the Code Compliance forms.
- DATE is the date of preparation of the compliance submittal package.
- PROJECT ADDRESS is the address of the project as shown on the Code Compliance forms.
- TESTING AUTHORITY is the person responsible for verifying all acceptance tests were performed and each system passed.

MECH-12A - Fault Detection & Diagnostics for DX Units

- PROJECT NAME is the title of the project, as shown on the Code Compliance forms.
- DATE is the date of preparation of the compliance submittal package.
- PROJECT ADDRESS is the address of the project as shown on the Code Compliance forms.
- TESTING AUTHORITY is the person responsible for verifying all acceptance tests were performed and each system passed.

DRAFT

MECH-13A - Automatic Fault Detection & Diagnostics for Air Handling & Zone Terminal Units

- PROJECT NAME is the title of the project, as shown on the Code Compliance forms.
- DATE is the date of preparation of the compliance submittal package.
- PROJECT ADDRESS is the address of the project as shown on the Code Compliance forms.
- TESTING AUTHORITY is the person responsible for verifying all acceptance tests were performed and each system passed.

MECH-14A - Distributed Energy Storage DX AC Systems Test

- PROJECT NAME is the title of the project, as shown on the Code Compliance forms.
- DATE is the date of preparation of the compliance submittal package.
- PROJECT ADDRESS is the address of the project as shown on the Code Compliance forms.
- TESTING AUTHORITY is the person responsible for verifying all acceptance tests were performed and each system passed.

MECH-15A - Thermal Energy Storage (TES) Systems

- PROJECT NAME is the title of the project, as shown on the Code Compliance forms.
- DATE is the date of preparation of the compliance submittal package.
- PROJECT ADDRESS is the address of the project as shown on the Code Compliance forms.
- TESTING AUTHORITY is the person responsible for verifying all acceptance tests were performed and each system passed.

10.9 Lighting Forms for Acceptance Requirements

There are three forms used to document the completion of these procedures. Each form includes a series of check boxes relating to each test or verification that needs to be performed. When completing the forms, check the appropriate box on the form after each test or verification is completed. Where the form includes data entry locations other than check boxes, enter the data requested on the form.

These forms are located in Appendix A.

- Certificate of Acceptance (3 pages)
- Lighting Control Acceptance Document
- Automatic Daylighting Controls Acceptance Document

DRAFT

LTG-1-A - Certificate of Acceptance Part 1 of 2

The form is separated into three basic sections: project information; general information; and statement of acceptance. Each section consists of a combination of data entry requirements and check boxes.

Project Information

- PROJECT NAME is the title of the project, as shown on the Code Compliance forms.
- DATE is the date of preparation of the compliance submittal package.
- PROJECT ADDRESS is the address of the project as shown on the Code Compliance forms.
- TESTING AUTHORITY is the person responsible for verifying all acceptance tests were performed and each system passed.
- TELEPHONE is the phone number where the testing authority can be reached during regular business hours.

General Information

This section consists of a combination of data entry requirements and check boxes, all of which are self explanatory. Complete check boxes and enter data as instructed.

Statement of Acceptance

- This section consists of a combination of check boxes and data entry requirements, including signature; date; and license number. Complete check boxes and enter data as instructed.

LTG-1-A - Certificate of Acceptance Part 2 of 2

The form is used to document the overall final results of all acceptance tests.

Summary of Acceptance Tests

- SYSTEM ACCEPTANCE DOCUMENT refers to the name of the test form that has been completed. For example: "Lighting Control Acceptance" document, LTG-2-A. This designates the acceptance test of type of lighting control designated #1 or name of control. Typically an individual form is completed for each piece of control tested.
- TESTING AUTHORITY is the person responsible for verifying all acceptance tests were performed and each system passed.0
- DATE OF TEST is the date each test was actually performed.
- PASS/FAIL is the final outcome of the acceptance test.
-

LTG-2-A - Lighting Control Acceptance Document

This form is used to document the results for various lighting control tests. The form was designed so that data for three lighting control strategies (occupancy sensors, manual daylight control, and automatic time switch) could be recorded on one form. The form is separated into six basic sections: project information; pre-test inspection; select acceptance tests; ~~equipment testing~~functional testing requirements; pass/fail evaluation; and certification statement. Each section consists of a combination of data entry requirements and check boxes.

DRAFT

Project Information

- PROJECT NAME is the title of the project, as shown on the Code Compliance forms.
- DATE is the date of preparation of the compliance submittal package.
- PROJECT ADDRESS is the address of the project as shown on the Code Compliance forms.
- TESTING AUTHORITY is the person responsible for verifying all acceptance tests were performed and each system passed.
- TELEPHONE is the phone number where the testing authority can be reached during regular business hours.
- LIGHTING CONTROL SYSTEM NAME/DESIGNATION is the name or unique identifier for the system(s) being tested. For example: "occupancy sensors and lighting sweep"

Pre-test Inspection

- This section consists of check boxes. Complete check boxes as instructed.

Select Acceptance Test

- This section documents which of the acceptance tests were performed. Check the appropriate box for each applicable test.

~~Equipment Testing~~Functional Testing

- This section consists of data entry requirements arranged by individual test procedures. There are three columns under the "Applicable Lighting Control System" heading labeled 1 through 3 and are identified as follows: column 1 – occupancy sensors; column 2 – manual daylighting controls; and column 3 – automatic time switch controls. Note that the columns are shaded when test procedures do not apply to a particular control strategy. Enter data as instructed in each column.

Pass/Fail Evaluation

- Check the appropriate box as instructed.

Certification Statement

- The statement of compliance is signed by the person responsible for performing the test and verifying system performance. The signatory provides the following: name; company name; signature and date signed; as well as license number and expiration date.

LTG-3-A - Automatic Daylighting Control Acceptance Document

This form is used to document the results for automatic daylighting control tests. The form was designed so that data for three lighting control strategies (continuous dimming, stepped dimming, and stepped switching) could be recorded on one form. The form is separated into six basic sections: project information; pre-test inspection; control systems; ~~equipment testing~~functional testing requirements; pass/fail evaluation; and certification statement. Each section consists of a combination of data entry requirements and check boxes.

DRAFT

Project Information

- PROJECT NAME is the title of the project, as shown on the Code Compliance forms.
- DATE is the date of preparation of the compliance submittal package.
- PROJECT ADDRESS is the address of the project as shown on the Code Compliance forms.
- TESTING AUTHORITY is the person responsible for verifying all acceptance tests were performed and each system passed.
- TELEPHONE is the phone number where the testing authority can be reached during regular business hours.

- AUTOMATIC DAYLIGHTING CONTROL NAME/DESIGNATION is the name or unique identifier for the system(s) being tested. For example: "continuous dimming – whole building".

Pre-test Inspection

- This section consists of check boxes. Complete check boxes as instructed.

Control Systems

- This section documents which control strategy has been tested. Check the appropriate box for each applicable strategy.

~~Equipment Testing~~Functional Testing

This section consists of data entry requirements arranged by individual test procedures. There are three columns under the "Applicable Control System" heading labeled 1 through 3 and are identified as follows: column 1 – continuous dimming; column 2 – stepped dimming; and column 3 – stepped switching. Note that the columns are shaded when test procedures do not apply to a particular control strategy. Enter data as instructed in each column.

Pass/Fail Evaluation

- Check the appropriate box as instructed.

Certification Statement

The statement of compliance is signed by the person responsible for performing the test and verifying system performance. The signatory provides the following: name; company name; signature and date signed; as well as license number and expiration date

10.10??? Outdoor Lighting Forms for Acceptance Requirements

DRAFT

There are three forms used to document the completion of these procedures. Each form includes a series of check boxes relating to each test or verification that needs to be performed. When completing the forms, check the appropriate box on the form after each test or verification is completed. Where the form includes data entry locations other than check boxes, enter the data requested on the form.

These forms are located in Appendix A.

- Certificate of Acceptance (2 pages)
- Outdoor Motion Sensor Acceptance
- Outdoor Lighting Shut-off Controls Acceptance Document

OLTG-1A - Certificate of Acceptance Part 1 of 2

Project Information

- PROJECT NAME is the title of the project, as shown on the Code Compliance forms.
- DATE is the date of preparation of the compliance submittal package.
- PROJECT ADDRESS is the address of the project as shown on the Code Compliance forms.
- TESTING AUTHORITY is the person responsible for verifying all acceptance tests were performed and each system passed.
- TELEPHONE is the phone number where the testing authority can be reached during regular business hours.

OLTG-2A –Outdoor Motion Sensor Acceptance

Project Information

- PROJECT NAME is the title of the project, as shown on the Code Compliance forms.
- DATE is the date of preparation of the compliance submittal package.
- PROJECT ADDRESS is the address of the project as shown on the Code Compliance forms.
- TESTING AUTHORITY is the person responsible for verifying all acceptance tests were performed and each system passed.
- TELEPHONE is the phone number where the testing authority can be reached during regular business hours.
- LIGHTING CONTROL SYSTEM NAME/DESIGNATION is the name or unique identifier for the system(s) being tested. For example: "occupancy sensors and lighting sweep"

OLTG-3A –Outdoor Lighting Shut-off Controls Acceptance

Project Information

- PROJECT NAME is the title of the project, as shown on the Code Compliance forms.
- DATE is the date of preparation of the compliance submittal package.
- PROJECT ADDRESS is the address of the project as shown on the Code Compliance forms.
- TESTING AUTHORITY is the person responsible for verifying all acceptance tests were performed and each system passed.
- TELEPHONE is the phone number where the testing authority can be reached during regular business hours.
- LIGHTING CONTROL SYSTEM NAME/DESIGNATION is the name or unique identifier for the system(s) being tested. For example: "occupancy sensors and lighting sweep"

DRAFT

Appendix A

Compliance Forms and Worksheets

Component	Form Name	Standards Reference	Nonresidential Manual
Envelope	Envelope Field Inspection - Checklist		
	ENV-1C - Certificate of Compliance		
	ENV-2C - Envelope Component Approach		
	ENV-3C - Overall Envelope Approach		
	ENV-4C - Skylight Area Support Worksheet		
	FC-1- CEC Default U-factor and SHGC Label Certificate		
Mechanical	Mechanical Field Inspection - Checklist		
	MECH-1C - Certificate of Compliance		
	MECH-2C - Air, Water Side System, Service Hot Water & Pool Requirements		
	MECH-3C -Mechanical Ventilation and Reheat - The MECH-4-HERS form may be required for conditioned zones less than 5,000 ft^2 in conjunction with MECH-4A.		
	MECH-4C- Fan Power Consumption		
Indoor Lighting	Lighting Field Inspection - Checklist		
	LTG-1C - Certificate of Compliance		
	LTG-2C - Indoor Lighting Schedule		
	LTG-3C - Lighting Controls Credit Worksheet		
	LTG-4C - Indoor Lighting Power Allowance		
	LTG-5C -Tailored Approach Worksheet		
	LTG-6C - Room Cavity Ratio Worksheet		
	LTG-7C - Line Voltage Track Lighting Worksheet		
Outdoor Lighting	Outdoor Lighting Field Inspection - Checklist		
	OLTG-1C - Certificate of Compliance		
	OLTG-2C - Outdoor Lighting Worksheet		
Sign Lighting	Sign Lighting Field Inspection - Checklist		
	SLTG-1C - Certificate of Compliance (Sign Lighting)		

Appendix A

Installation Certificates

Installation Certificate			
Component	**Form Name**	**Standards Reference**	**Nonresidential Manual**
Envelope	ENV-INST- Installation Certificates		
Mechanical	MECH-INST - Installation Certificates		
Lighting	LGT-INST - Installation Certificates		
Outdoor Lighting	OTLG-INST - Installation Certificates		
Sign Lighting	----------		

Appendix A

Certificates of Acceptance

Component	Form Name	Standards Reference	Reference Nonresidential Appendix
	Deleted Forms – LTG-1A , OTLG -1A, MECH-1A, and ENV-1A	----------	----------
Envelope	ENV-2A – Fenestration Acceptance	10-111 & §116	NA7.4.1
Mechanical	MECH-2A - Ventilation Systems - Variable Air and Constant Volume Systems	10-103(b)4 & §121(b)2, §125(a)1	NA7.5.1.1 NA7.5.1.2
	MECH-3A – Constant-Volume, Single-Zone, Unitary A/C and Heat Pumps	§121(c)2, §122 & §125(a)2	NA7.5.2
	MECH-4A - Air Distribution Systems – The MECH-4-HERS Form may be required for zones less than 5,000 ft^2 in conjunction with MECH-3C.	§125(a)3 & §144(k)	NA7.5.3
	MECH-5A – Air Economizer Controls	§125(a)4 & §144(e)	NA7.5.4
	MECH-6A - Demand Control Ventilation (DVC)	§121(c)4, §121(c)4E & §125(a)5	NA7.5.5
	MECH-7A - Supply Fan Variable Flow Controls (VFC)	§125(a)6 & §144(c)2C §144(c)2D	NA7.5.6
	MECH-8A – Valve Leakage Test	§125(a)8, §125(a)9 & §144(j)1, §144(j)5, §144(j)6	NA7.5.7
	MECH-9A - Supply Water Temperature Reset	§125(a)8 & 144(j)4	NA7.5.8
	MECH-10A - Hydronic System Variable Flow Control	§125(a)7 & §144(j), §144(j)1, §144(j)5, §144(j)6	NA7.5.9
	MECH-11A - Automatic Demand Shed Control Acceptance	§122(h) & 125(a)10	NA7.5.10
	MECH-12A - Fault Detection & Diagnostics for DX Units	§125(a)11	NA7.5.11
	MECH-13A - Automatic Fault Detection & Diagnostics for Air Handling & Zone Terminal Units	§125(a)12	NA7.5.12
	MECH-14A - Distributed Energy Storage DX AC Systems Test	§125(a)13	NA7.5.13
	MECH-15A - Thermal Energy Storage (TES) Systems	§125(a)14	NA7.5.14
Indoor Lighting	LTG-2A - Lighting Controls	§119(d), §119(e) & §131(d)	NA7.6.2, 6.3 and 6.4
	LTG-3A - Automatic Daylighting	§119(f)	NA7.6.1
Outdoor Lighting	OLTG-2A – Outdoor Motion Sensor Acceptance	§119(d) & §132(a)	NA7.7.1
	OLTG-3A– Outdoor Lighting Shut-off Controls	§132(c)	NA7.7.2

Appendix A

HERS Verification and Testing

Certificate of Field Verification and Diagnostic Testing			
Component	**Form Name**	**Standards Reference**	**Reference Nonresidential Appendix**
Mechanical	MECH-4-HERS - Air Distribution System Leakage Diagnostic may be required for zones less than 5,000 ft^2 in conjunction with MECH-3C and MECH-4A.		NA1; NA2

2008 Compliance Forms

Envelope

FIELD INSPECTION ENERGY CHECKLIST

Project Name	Building Type: ☐ Nonresidential ☐ High-Rise Residential ☐ Hotel/Motel Guest Room ☐ Relocatable School Bldg. ☐ Addition Alone ☐ Alteration Alone		Date
Project Address	Climate Zone	Total Cond. Floor Area	Alteration or Addition Floor Area

FIELD INSPECTION ENERGY CHECKLIST

OPAQUE SURFACE

Assembly Type (wall, floor, etc.)	Construction Type (wood, frame, etc.)	From Reference Joint Appendix 4 Tables	Cavity R-Value	Continuous R-Value	Area (ft^2)	Status	Special Feature[1]	Pass	Fail[2]
Roof	Wood Framed		27.5	4.0	1200	Upgrade	☐	☐	☐
							☐	☐	☐
							☐	☐	☐
							☐	☐	☐
							☐	☐	☐
							☐	☐	☐
							☐	☐	☐

1. Indicate special feature on Page 2 of the Inspection Checklist Form below.
2. If Fail then describe on Page 2 of the Inspection Checklist Form and take appropriate action to correct. Verify building plans if necessary.

FENESTRATION DETAILS

Tag /ID	Fenestration Type[1] (Window, Glass Door, Curtain wall, Skylight, or other)	Exterior Orientation	Area (ft^2)	U-Factor	SHGC	Overhang	Sidefins	Status[1]	Pass	Fail[2]
1	Curtain wall	Front (N)	105	0.55	0.67	None	None	Upgraded	☐	☐
									☐	☐
									☐	☐
									☐	☐
									☐	☐
									☐	☐
									☐	☐

1. Indicate Status of fenestration (New, Existing or Upgrade).
2. If Fail then describe on Page 2 of the Inspection Checklist Form and take appropriate action to correct. Verify building plans if necessary.

ROOFING PRODUCT (COOL ROOFS)

CHECK APPLICABLE BOX BELOW IF EXEMPT FROM THE ROOFING PRODUCT "COOL ROOF" REQUIREMENT:	Pass	Fail	NA
☐ Wood framed roof assembly in Climate Zones 3 and 5 has a U-factor of 0.039 or lower.	☐	☐	☐
☐ Metal framed roof assembly in Climate Zones 3 and 5 has a U-factor of 0.048 or lower.	☐	☐	☐
☐ The area of the roof covered by building integrated photovoltaic panels and building integrated solar thermal panels are exempt from the Cool Roof criteria below.	☐	☐	☐
☐ Roof constructions that have thermal mass over the roof membrane with a weight of at least 25 lb/ft^2 is exempt from the Cool Roof criteria below.	☐	☐	☐
☐ Liquid Field Applied Coatings, the coating must be applied across the entire roof surface and meet the dry mil thickness or coverage recommended by the coatings manufacturer and meet minimum performance requirements listed in §118(i)4. Select the applicable coating:	☐	☐	☐
☐ Aluminum-Pigmented Asphalt Roof Coating	☐	☐	☐
☐ Cement-Based Roof Coating	☐	☐	☐

FIELD INSPECTION ENERGY CHECKLIST

Project Name:	Date:

	Pass	Fail	NA
☐ **CRRC-1 Label Attached to Compliance Submittal** *(Note if the CRRC-1 label is NOT available, this compliance approach cannot be used). Go to Overall Envelope Approach or Performance Approach.*	☐	☐	☐

CRRC Product ID Number[1]	Roof Slope		Product Weight		Solar Reflectance[2]				Thermal Emmitance from pakage label	Yes	NO
	≤ 2:12	> 2:12	< 5lb/ft^2	≥ 5lb/ft^2	Initial	Aged	Initial	Value			
	☐	☐	☐	☐	☐	☐	☐			☐	☐
	☐	☐	☐	☐	☐	☐	☐			☐	☐
	☐	☐	☐	☐	☐	☐	☐			☐	☐

1.The CRRC Product ID Number can be obtained from the packaging when a cool roof label is present from the Cool Roof Rating Council's Rated Product Directory at www.coolroofs.org/products/search.php

2. If the aged reflectance value is not available from the packaging then check off the box and enter the Initial Reflectance value from the CRRC-1 Certificate Label.

SPECIAL FEATURES INSPECTION CHECKLIST (See Page 2 of 2 of ENV-1C)

The local enforcement agency should pay special attention to the items specified in this checklist. These items require special written justification and documentation, and special verification. The local enforcement agency determines the adequacy of the justification, and may reject a building or design that otherwise complies based on the adequacy of the special justification and documentation submitted.

The Roof "R-38 Roof" includes credit for a Cool Roof with a Reflectance = 0.25 and Emittance = 0.80.

Discrepancies:

Certificate of Compliance

Project Name:	Climate Zone:	Conditioned Floor Area:
Project Address:	New Addition Floor Area:	Date:

General Information

Building Type:	☐ Nonresidential	☐ High-Rise Residential	☐ Hotel/Motel Guest Room
	☐ Relocatable School Bldg.	☐ Conditioned Spaces	☐ Unconditioned Spaces
Phase of Construction:	☐ New Construction	☐ Addition	☐ Alteration
Approach of Compliance:	☐ Component	☐ Overall Envelope	☐ Unconditioned (file affidavit)

Documentation Author's Declaration Statement

- I certify that this Certificate of Compliance documentation is accurate and complete.

Name:	Signature:
Company:	Date:
Address:	EA # CEPE #
City/State/Zip:	Phone:

Principal Envelope Designer's Declaration Statement

- I am eligible under Division 3 of the California Business and Professions Code to accept responsibility for the envelope design.
- This Certificate of Compliance identifies the envelope features and performance specifications required for compliance with Title 24, Parts 1 and 6 of the California Code of Regulations.
- The design features represented on this Certificate of Compliance are consistent with the information provided to document this design on the other applicable compliance forms, worksheets, calculations, plans and specifications submitted to the enforcement agency for approval with this building permit application.

Name:	Signature:
Company:	Date:
Address:	License #
City/State/Zip:	Phone:

Envelope Mandatory Measures

Indicate location on building plans of Mandatory Measures Note Block: _____

INSTRUCTIONS TO APPLICANT ENVELOPE COMPLIANCE & WORKSHEETS (check box if worksheet are included)

For detailed instructions on the use of this and all Energy Efficiency Standards compliance forms, please refer to the Nonresidential Compliance Manual.

☐	ENV-1C	Certificate of Compliance. Required on plans for all submittals.
☐	ENV-2-C	Use with the Envelope Component compliance approach.
☐	ENV-3-C	Use with the Overall Envelope compliance approach.
☐	ENV-4-C	Use with Prescriptive compliance for the minimum skylight requirements for large enclosed spaces in climate zones 2 through 15.

Certificate of Compliance

Project Name:	Date

Opaque Surface Details

Tag /ID	Assembly or Frame Type (Metal, wood Framed, Mass, Furred, etc)	Surface Area (ft^2)	Surface Orientation (N, S, E, W, Roof, Floor)	From Reference Joint Appendix JA4 Tables	Insulation			Condition Status[1]	Location/Comments
					Cavity R-value	Continuous R-value	U-Factor		
				4.9 C25	19	5.0	0.049		

1. Condition Status: N, E, or A (New, Existing, or Altered).

For all newly installed fenestration; must have either a certified NFRC Label Certificate or use the CEC default tables found in Table 116-A and Table 116B and documented by using CECs Fenestration Certificate (FC-1). For site-built fenestration less than 10,000 ft^2 or more than or equal to10,000 ft^2 see options for compliance in the Nonresidential Manual in Section 3.1.

MINIMUM SKYLIGHT AREA FOR LARGE ENCLOSED SPACES

✓ ☐ *The proposed building contains an enclosed space with floor area greater than 8,000 ft^2, a ceiling height greater than 15 feet, and an LPD for general lighting of at least 0.5 W/ft^2.* ***If this box is checked, ENV-4C must be filled out.***

Fenestration Surface Details

A	B	C	D		E		F	G	H	I	J
Tag /ID	Fenestration Type (Window, Glass Door, Curtain wall, Skylight)	Area (ft^2)	Maximum U-Factor[1]		Maximum SHGC[2]		Orientation	Total Site-built[3] Area (ft^2)	Over hang[5]	Condition Status[4]	Location/Comments
			Value	Source	Value	Source					
1									☐		
									☐		
									☐		
									☐		
									☐		

1. U-Factor Source: From NFRC = Labeled Certificate or from FC-1.
2. SHGC Source: From NFRC = Labeled Certificate or from FC-1.
3. Indicate the total Area for each orientation.
4. Condition Status: N, E, or A (New, Existing, or Altered).
5. If the Overhang box is checked off then Overhang Details below need to be filled for each identified fenestration, TAG/ID column.

Overhang Details

Fenestration Tag/ID from above	Proposed SHGC from Above	Window		Overhang		
		Horizontal Projection	Vertical Distance	Left Extension[1]	Right Extension[1]	Calculated RSHGC[2]
1						

1. Overhang extends beyond both sides of the window jamb a distance equal to the overhang projection.
2. Calculated RSHGC value must be equal to the Proposed SHGC value.

ENVELOPE COMPONENT APPROACH

PROJECT NAME	DATE

WINDOW AREA CALCULATION

A. DISPLAY PERIMETER	**FT × 6 FT =**	**ft²**	**DISPLAY AREA**
B. GROSS EXTERIOR WALL AREA	**ft² × 0.40 =**	**ft²**	**40% of GROSS EXTERIOR WALL AREA**
C. ENTER LARGER OF A OR B		**ft²**	**MAXIMUM STANDARD AREA**
D. ENTER PROPOSED WINDOW AREA		**ft²**	**PROPOSED WINDOW AREA**

If the PROPOSED WINDOW AREA is greater than the MAXIMUM STANDARD AREA then the envelope component approach may not be used.

E. WINDOW WALL RATIO = Proposed Window Area Divided by Gross Exterior Wall Area =		

F. WEST DISPLAY PERIMETER	**FT × 6 FT =**	**ft²**	**WEST DISPLAY AREA**
G. WEST EXTERIOR WALL AREA	**ft² × 0.40 =**	**ft²**	**40% of WEST EXTERIOR WALL AREA**
H. ENTER THE LARGER OF F AND G		**ft²**	**MAXIMUM STANDARD WEST AREA**
I. ENTER PROPOSED WEST WINDOW AREA		**ft²**	**PROPOSED WEST WINDOW AREA**

If the PROPOSED WEST WINDOW AREA is greater than the MAXIMUM STANDARD WEST AREA then the envelope component approach may not be used.

J. WEST WINDOW WALL RATIO = Proposed West Window Area Divided by West Exterior Wall Area =		

SKYLIGHT AREA CALCULATION

A. ATRIUM or SKYLIGHT HEIGHT	**FT**		
	GROSS ROOF AREA		**STANDARD ALLOWED SKYLIGHT AREA**
B. IF Atrium/Skylight Height in A ≤ 55 FT		**ft² × 0.05 =**	**ft²**
C. IF Height in A > 55 FT		**ft² × 0.10 =**	**ft²**
D. STANDARD SKYLIGHT AREA	**ft²**		**ft²**
E. PROPOSED SKYLIGHT AREA			**ft²**

If the PROPOSD SKYLIGHT AREA is greater than the STANDARD ALLOWED SKYLIGHT AREA
then the envelope component approach may not be used.

SKYLIGHTS DETAILS

SKYLIGHT NAME (e.g., Sky-1, Sky-2)	SKYLIGHT GLAZING ✓ Glass With Curb	✓ Glass With No Curb	✓ Plastic	# OF PANES	U-FACTOR PROPOSED	U-FACTOR ALLOWED	SOLAR HEAT GAIN COEFFICIENT PROPOSED	SOLAR HEAT GAIN COEFFICIENT ALLOWED
	☐	☐	☐					
	☐	☐	☐					
	☐	☐	☐					
	☐	☐	☐					
	☐	☐	☐					
	☐	☐	☐					
	☐	☐	☐					

RELOCATABLE PUBLIC SCHOOL BUILDINGS - See §143(a)8 in the Energy Standards

☐ For Specific Climate Zone, use Table 143-A - Prescriptive Envelope Criteria.	☐ Specific Climate Zone Metal Identification Label – Place two labels on each relocatable school building and indicate on the building plans.
☐ For Any (All) Climate Zone, use Table 143-C - Prescriptive Envelope Criteria.	☐ Any (All) Climate Zone Metal Identification Label - Place two labels on each relocatable school building and indicate on the building plans.

ENVELOPE COMPONENT APPROACH

PROJECT NAME	DATE

ROOFING PRODUCT (COOL ROOFS) - *See Section 3.3 in the Nonresidential Manual and §118(i) and §143(a)1A in the Energy Standards for further description about exterior roofs and mandatory requirements for Cool Roofs.*

✓ ☐ **CRRC-1 Label Attached to Submittal**

(Note if no CRRC-1 label is available, this compliance approach cannot be used, Go to Overall Envelope Approach or Performance Approach).

CRRC Product ID Number[1]	Roof Slope ≤ 2:12	Roof Slope > 2:12	Product Weight < 5lb/ft²	Product Weight ≥ 5lb/ft²		Aged Solar Reflectance[2,3]	Thermal Emmitance	SRI
	☐	☐	☐	☐	☐			
	☐	☐	☐	☐	☐			
	☐	☐	☐	☐	☐			

3. The CRRC Product ID Number can be obtained from the Cool Roof Rating Council's Rated Product Directory at www.coolroofs.org/products/search.php

4. If the aged reflectance is not available in the Cool Roof Rating Council's Rated Product Directory then use the initial reflectance value from the directory and use the equation (0.2+0.7(ρinitial – 0.2) to obtain a calculated aged value.

5. Check box if the Aged Reflectance is a calculated value using the equation above.

✓ ☐ **CHECK APPLICABLE BOX BELOW IF EXEMPT FROM THE ROOFING PRODUCT "COOL ROOF" REQUIREMENT:**

☐ Exempted if the Wood framed roofs in Climate Zones 3 and 5 have a U-factor of 0.039 or lower.

☐ Exempted if the metal framed roofs in Climate Zones 3 and 5 have a U-factor of 0.048 or lower.

☐ The roof area covered by building integrated photovoltaic panels and building integrated solar thermal panels are excempted from the above Cool Roof criteria.

☐ Roof constructions that have thermal mass over the roof membrane with a weight of at least 25 lb/ft² is exempted from the above Cool Roof criteria.

To apply **Liquid Field Applied Coatings,** the coating must be applied across the entire roof surface and meet the dry mil thickness or coverage recommended by the coatings manufacturer and meet minimum performance requirements listed in §118(i)4. Select the applicable coating:

☐ Aluminum-Pigmented Asphalt Roof Coating	☐ Cement-Based Roof Coating	☐ Other _____

OPAQUE SURFACES

Assembly or Frame Type (Metal, wood Framed, Mass, Furred, etc	TYPE (e.g. Roof, Wall, Floor, demising, etc)	Heat Capacity	INSULATION R-VALUE[1] Proposed	INSULATION R-VALUE[1] Minimum Allowed	ASSEMBLY U-FACTOR Proposed	ASSEMBLY U-FACTOR Reference Joint Appendix JA4	ASSEMBLY U-FACTOR Maximum Allowed

1. For each assembly type, meet the minimum insulation R-value or the maximum assembly U-factor.

WINDOWS

WINDOW NAME (e.g., Window-1, Window-2)	ORIENTATION ✓ N	✓ E	✓ S	✓ W	Fenestration U-FACTOR PROP.	U-FACTOR ALLOW.	# OF PANES	Fen. SHGC[1]	PROPOSED RSHG H	V	H/V	OHF	PROP. RSHG	ALLOWED RSHG[2]
	☐	☐	☐	☐										
	☐	☐	☐	☐										
	☐	☐	☐	☐										
	☐	☐	☐	☐										
	☐	☐	☐	☐										

1. From Fenestration Surfaces ENV-1-C, Page 2, Column G, or when Column H has a "C" identifier, calculate using the center of glass value SHGC in $SHGC_{FEN}$ = .08 + (.86 x SHGCc) and enter value.

2. If a window does not have an overhang, then SHGC = RSHGC.

OVERALL ENVELOPE APPROACH

PROJECT NAME ASDF	DATE

WINDOW RATIO CALCULATION for ALL WALLS

A. TOTAL LINEAR DISPLAY PERIMETER		FT × 6 FT =	ft^2	DISPLAY AREA
B. TOTAL GROSS EXTERIOR WALL AREA		ft^2 × 0.40 =	ft^2	40% of GROSS EXTERIOR WALL AREA
C. ENTER LARGER OF A OR B			ft^2	MAXIMUM STANDARD AREA
D. ENTER PROPOSED WINDOW AREA			ft^2	PROPOSED AREA
E. WINDOW WALL RATIO = (Row D) Divided by (Row B) =				See RSHG in Table 143-A, 143-B, or 143-C

WEST WINDOW RATIO CALCULATION

F. WEST LINEAR DISPLAY PERIMETER		FT × 6 FT =	ft^2	WEST DISPLAY AREA
G. WEST EXTERIOR WALL AREA		ft^2 × 0.40 =	ft^2	40% of WEST EXTERIOR WALL AREA
H. ENTER THE LARGER OF F AND G			ft^2	MAXIMUM STANDARD WEST AREA
I. ENTER PROPOSED WEST WINDOW AREA			ft^2	PROPOSED WEST WINDOW AREA
J. WINDOW WALL RATIO = (Row I) Divided by (Row G) =				See RSHG in Table 143-A, 143-B, or 143-C for

Combined Area for North, East and South Walls

K. N/E/S DISPLAY PERIMETER (A Minus F)		FT × 6 FT =	ft^2	N/E/S of WEST EXTERIOR WALL AREA
L. N/E/S EXTERIOR WALL AREA (B Minus G)		ft^2 × 0.40 =	ft^2	40% N/E/S AREA
M. ENTER LARGER OF K or L			ft^2	MAXIMUMN STANDARD N/E/S/ AREA
N. PROPOSED N/E/S/ WINDOW AREA (D Minus I)			ft^2	PROPOSED N/E/S/ AREA

Window adjustment

O. IF D>C and/or if I>H, PROCEED TO THE CALCULATION STEPS 1 FOR ALL WALLS OR 2 FOR WEST WALL. IF NOT, GO TO THE SKYLIGHT AREA TEST ON PAGE

1. IF D>C: Use the calculated Window Adjustment Factor (WAF) for all walls.

MAX. STANDARD AREA (from C)		PROPOSED WINDOW AREA (from D)		WINDOW ADJUSTMENT FACTOR
	÷		=	

GO TO PAGE 6 TO CALCULATE ADJUSTED AREA

2. IF I>H: Calculate one Window Adjustment Factor (WAF) for the West wall.

MAX. STANDARD WEST AREA (from H)		PROPOSED WEST AREA (from I)		WEST WINDOW ADJUSTMENT FACTOR
	÷		=	

MAX. STANDARD AREA (from C)		PROPOSED AREA (from D)		WEST WINDOW ADJUSTMENT FACTOR
	÷		=	

GO TO PAGE 6 TO CALCULATE ADJUSTED AREA

PROJECT NAME	DATE

SKYLIGHT AREA CALCULATION

A. ATRIUM or SKYLIGHT HEIGHT	**FT**			
	GROSS ROOF AREA		**STANDARD ALLOWED SKYLIGHT AREA**	
B. IF Height in A ≤ 55 FT		**$ft^2 \times 0.05 =$**	**ft^2**	
C. IF Height in A > 55 FT		**$ft^2 \times 0.10 =$**	**ft^2**	
D. PROPOSED SKYLIGHT AREA				**ft^2**

IF THE PROPOSED SKYLIGHT AREA IS GREATER THAN THE STANDARD SKYLIGHT AREA PROCEED TO THE NEXT CALCULATION FOR THE SKYLIGHT AREA ADJUSTMENT. IF NOT GO TO PAGE 3 OF 6.

1. IF PROPOSED SKYLIGHT AREA ≥ STANDARD SKYLIGHT AREA:

STANDARD SKYLIGHT AREA		PROPOSED SKYLIGHT AREA (IF E = 0 ENTER 1)		SKYLIGHT ADJUSTMENT FACTOR
	÷		=	

GO TO PAGE 6 TO CALCULATE ADJUSTED AREAS

OVERALL ENVELOPE TDV ENERGY APPROACH

PROJECT NAME	DATE

TDV for the Standard Design Building, See Reference Nonresidential Appendix NA5.2

Occupancy Type and Coefficients Tables	☐ Nonresidential, See, Table NA5-3	☐ 24-Hour Use, See, Table NA5-4	☐ Retail, See, Table NA5-5	Climate Zone:

A	B	C	D	E	F	G	H	I	J	K	L
Envelope Component Type (e.g. Wall, Floor, Roof, Window, Skylight & Door)[1]	**Orientation** (for only walls, doors & windows	**Roofs or Floor Mass Type**[2,3]	**Number** of **Component Type**[1]	**Criteria**				**Coefficients**[6] **of**			**TDV Energy**[8]
								U-factor	**RSHGC**	**VT**	
				Surface Area of Same Component	**U-factor**[4]	**RSHGC**[5]	**VT**[7]	**Cui**	**Csi**	**Cti**	
										Total Standard Design	

1. Grouping of like assemblies and in the same orientation is allowed and indicate the numbe of same in column B.
2. For Roofs & Floors, the categories are; light(HC<7) and Mass (HC>=7).
3. For Walls, the catergoies are; light(HC<7), medium mass (7<=HC,15), and heavy mass (HC>=15).
4. Standard Design U-factor are from Table 143-A, Table 143-B or Table 143-C.
5. Standard Design RSHGC are from Table 143-A, Table 143-B or Table 143-C. Note: Not all vertical windows may have an overhang then use SHGC value.
6. Coefficients are found in Table NA5.3, Table NA5.4, or Table NA5.5.
7. To calculate the standard design VT, multiply 1.2 x RSHGC.
8. Calculate the TDV Standard Designfor for each assembly type: $TDV_S = (\text{Column D}) \times [A_{Si} \times [(C_{Sui} \times U_{Si}) + (C_{Ssi} \times SHGC_{Si}) + (C_{Sti} \times VT_{Si})]]$ *for each Envelope Component Type. See Nonresidential Manual Examples in Section 3.7.*

OVERALL ENVELOPE TDV ENERGY APPROACH

PROJECT NAME | DATE

TDV for the Proposed Design Building, See Reference Nonresidential Apendix NA5.3

Occupancy Type and Coefficients Tables	☐ Nonresidential, See, Table NA5-3	☐ 24-Hour Use, See, Table NA5-4	☐ Retail, See, Table NA5-5	Climate Zone:

A	B	C	D	E	F	G	H	I	J	K	L	M
			Criteria				Coefficients[4] of					
							U-factor	RSHGC	VT	Cool Roof	Over hang[7]	TDV Energy[5,6]
Envelope Component Type (e.g. Wall, Floor, Roof, Window, Skylight & Door)[1]	Orientation (for walls, doors & windows	Number Of Component Type[1]	Exterior Surface Area	U-factor	Glass or Skylight SHGC[2]	Glass or Skylight VT[3]	Cui	Csi	Cti	M_{cr}	M_{oh}	
Duel Pane #1	East	4	200	.55	.34	.50						
									Total Proposed Design			
							Proposed ≤ Standard					

1. Enter the number of similar component type that matches the Envelope Component Type.
3. Based on NFRC Certified ratings or from CEC defaultsTables 116-A and Table 116-B.
4. From NFRC Certified ratings or VT is calculate as 1.2 times the CEC Default SHGC value.
5. Coefficients are found in Table NA5.3, Table NA5.4, or Table NA5.5.
6. Cool Roof is the product of the area, U-factor, weighting coefficient and cool roof multiplier: $TDV_R = A_R \times U_R \times C_R \times M_{CR}$
7. The Proposed TDV energy use must be equal to or better than Standard TDV in Page 3 of 4. $TDV_P = A_{Pi} \times [(\text{Column C}) \times [(C_{Su} \times U_P) + (C_{Ss} \times SHGC_P) + (C_{St} \times VT_P)]]$
8. Use Page 5 of 6 to calculate the overhang multiplier.

Cool Roof Multiplier (M_{CR})

PROJECT NAME	DATE

Occupancy Type and Coefficients Tables	☐ Nonresidential, See Table NA5-3	☐ 24-Hour Use, See Table NA5-4	☐ Retail, See Table NA5-5	Climate Zone:

Coefficients of						Calculation	
A	B	C	D	E	F	G	
Reflectance	**Emittance**	**Proposed Aged Solar Reflectance**	**Standard Aged Solar Reflectance[1]**	**Proposed Thermal Emittance**	**Standard Thermal Emittance**	**Cool Roof Multiplier[2]**	
C_{Ref}	C_{Emit}	$\rho_{aged\ prop}$	$\rho_{aged\ std}$	ε_{prop}	ε_{std}	$M_{cR,I}$	
							Enter multiplier in Page 4 of 6 Column K.

Where: Standard design values for Solar Reflectance and Thermal Emittance. Excerpt from Table NA5-2.	Standard Aged Solar Reflectance (Column D)	Standard Thermal Emittance (Column F)
Low-Rise, Low-Sloped, CZ2 through CZ15	0.55	0.75
Low-Rise, Low-Sloped, CZ1 and CZ16	0.10	0.75
High-Rise, Low-Sloped, CZ10 through CZ15	0.55	0.75
High-Rise, Low-Sloped, CZ1-9 and CZ16	0.10	0.75
Steep-Sloped, CZ2 through CZ15	0.25	0.75
Steep-Sloped, all other	0.10	0.75

1. *Proposed Aged Design Solar Reflectance;* $\rho_{aged\ prop} = 0.7 \times (\rho_{init\ prop} + 0.06)$. *Where* ($\rho_{init\ prop}$) *reflectance value is found in the CRRC Directory. Enter results of the Cool Roof Multiplier equation in footnote 2.*

2. *Cool Roof Multiplier* $M_{cR,I} = 1 + C_{Ref} \times (\rho_{aged\ prop} - \rho_{aged\ std}) + C_{Emit} \times (\varepsilon_{prop} - \varepsilon_{std})$ or 1+ Col A X (Col C - Col D) + Col B X (Col E – Col F)

Overhang Multiplier (M_{OH})

Occupancy Type and Coefficients Tables	☐ Nonresidential, See Table NA5-3	☐ 24-Hour Use, See Table NA5-4	☐ Retail, See Table NA5-5	Climate Zone:

	Coefficients of		Fenestration Overhang			Calculation	
A	B	C	D	E	F	G	
Orientation	1st Projection Factor[1]	2nd Projection Factor[1]	Horizontal Projection (ft^2)	Vertical Distance (ft^2)	Projection Factor[2]	Overhang Multiplier[3]	
	a_i	b_i	H	V	PF	$M_{OH,I}$	
							Enter multiplier in Page 4 of 6 Column L.

1. Where: a_i *and* b_i *are the coefficients for the overhang projection factor (see tables) and is climate zone dependent.*

2. PF= H/V *(Horizontal (H) projection of the overhang from the surface of the window in feet, but no greater than V and the Vertical (V) distance from the window sill to the bottom of the overhang, in feet.) Enter results in Column F.*

3. $M_{OH,I} = 1 + a_i \times PF_i + b_i \times PF_i^2$ *Enter results in Column G.*

OVERALL ENVELOPE APPROACH

PROJECT NAME	DATE

WINDOW AREA ADJUSTMENT CALCULATIONS

Note: Putting the letters at the top of the columns in boxes is completely inconsistent with all the other pages

✓☐ CHECK IF NOT APPLICABLE (see Page 1 of 6)

A					B	C	D	E	F	G
WALL NAME (e.g. Wall-1, Wall-2)	**ORIENTATION**				**GROSS AREA**	**DOOR AREA**	**WINDOW AREA**	**WINDOW ADJUSTMENT FACTOR** (From Page 1)	**ADJUSTED WINDOW AREA** (D×E)	**ADJUSTED WALL AREA** B-(F+C)
	N	E	S	W						
	☐	☐	☐	☐						
	☐	☐	☐	☐						
	☐	☐	☐	☐						
	☐	☐	☐	☐						
	☐	☐	☐	☐						
	☐	☐	☐	☐						
	☐	☐	☐	☐						
	☐	☐	☐	☐						
	☐	☐	☐	☐						
	☐	☐	☐	☐						
	☐	☐	☐	☐						
	☐	☐	☐	☐						
	☐	☐	☐	☐						
	☐	☐	☐	☐						
	☐	☐	☐	☐						
	☐	☐	☐	☐						
TOTALS:										

SKYLIGHT AREA ADJUSTMENT CALCULATIONS

✓☐ CHECK IF NOT APPLICABLE (see Page 2 of 6)

A	B	C	D	E	F
ROOF NAME (e.g. Roof-1, Roof-2)	**GROSS AREA**	**SKYLIGHT AREA**	**SKYLIGHT ADJUSTMENT FACTOR** (From Page 1)	**ADJUSTED SKYLIGHT AREA** (C×D)	**ADJUSTED ROOF AREA** (B - E)
TOTALS:					

OVERALL ENVELOPE APPROACH (Part 1 of 3) ENV-4C

Minimum Skylight Area Worksheet

SKYLIGHT AREA FOR LARGE ENCLOSED SPACES (§143c)

Project Name:	Date:

✓❑ *This worksheet applies to buildings with three or fewer stories, in climate zones 2 through 15, having an enclosed space > 8,000ft² that is directly under a roof, with a ceiling height > 15 ft a lighting power density of > 0.5 W/ft².* ***Go to Step 1.***

✓❑ *Skylights not required as designed lighting system as shown on page _____ of building plans has general lighting power density of _____ W/ft², which is less than 0.5 W/ft².* ***Note****: this exemption applies only to buildings with a designed lighting system. This exception does not apply to core & shell buildings.* ***STOP HERE IF THIS BOX IS CHECKED. Space is exempt from minimum skylight area requirement.***

Name or reference of Large Enclosed Space on building plans _____.
Proposed daylit area is indicated on page _____ of the building plans.
Enter proposed skylit daylit area as indicated on building plans, not double counting any overlapping daylight areas.

Step 1 Calculate if Proposed Skylit Daylight Area is greater than or equal to Minimum Daylight Area.

Floor Area:		x 0.50 =	**A**		Minimum Daylight Area A = Floor Area x 0.50
Skylit daylight area determined in accordance with §131(c)1D			**B**		Proposed Skylit Daylight Area

❑ **Criterion 1: Check if Total Proposed Skylit Daylight Area is greater than or equal to Minimum Daylit Area. (B ≥ A)**
If Criterion 1 is checked go to Step 4 only on Page 2

Step 2 Calculate if Proposed Primary Sidelit Daylight Area is greater than or equal to Minimum Daylight Area

Primary sidelit daylit area determined in accordance with §131(c)1B	**C**		Proposed Primary Sidelit Daylight Area

❑ **Criterion 2: Check if Total Proposed Sidelit Daylight Area is equal to or greater than Minimum Daylit Area (C ≥ A)**
If Criterion 2 is checked go to Step 5 only on Page 2.

Step 3 Calculate if Proposed Primary Sidelit Daylight Area is greater than or equal to Minimum Daylight Area

Total Proposed Daylight Area = Skylit Area + Primary Sidelit Area **Add B + C and enter into D**	**D**		Total Proposed Daylit Area

❑ **Criterion 3: Check if Total Proposed Sidelit Daylight Area is greater than or equal to Minimum Daylit Area (D ≥ A)**
If Criterion 3 is checked complete both Steps 4 & 5 on Page 2

❑ If Criterion 1, Criterion 2 and Criterion 3 are all unchecked. Space FAILS, not enough daylight area, do not continue.

DRAFT

OVERALL ENVELOPE APPROACH (Part 2 of 3) ENV-4C

Minimum Skylight Area or Effective Aperture Worksheet

SKYLIGHT AREA FOR LARGE ENCLOSED SPACES (§ 143c)

Project Name:	Date:

Step 4 - Calculate SKYLIGHT criteria using either Step 4 a (minimum skylight area) or Step 4b (minimum effective aperture) and verify that skylight haze criteria is met Step 4c .

Step 4a - Compare Total Proposed Skylight Area to Minimum Skylight Area

	Minimum Skylight Area = Skylit Daylight Area x 0.033	**E**		Minimum Skylight Area
	Total Proposed Skylight Area = Sum of the areas (rough opening) of each individual skylight	**F**		Total Proposed Skylight Area

❑ **Criterion 4a: Check if Proposed Skylight Area is equal to or greater than Minimum Skylight Area (F ≥ E)**

Step 4b Compare Total Proposed Skylight Effective Aperture to Minimum Effective Aperture (alternative method)

	Minimum Skylight Effective Aperture	**G**	**0.011**	Minimum Skylight Effective Aperture
	Proposed Skylight Effective Aperture from ENV-4C (Part 3 of 3) Cell (W)	**H**		Proposed Skylight Effective Aperture

❑**Criterion 4b: Check if Proposed Skylight Effective Aperture is equal to or greater than Minimum Skylight Effective Aperture (H ≥ G)**

Step 4c Compare Proposed Skylight or Diffuser Haze to 90% minimum haze criteria

	Skylight glazing or diffuser haze rating according to ASTM D1003	Haze rating is indicated on page ___ of plans

❑ **Criterion 4c: Check if Proposed Skylight glazing or diffuser haze rating is ≥ 90%.**

❑ **Criterion 4c: Check if either Criterion 4a or Criterion 4b is checked and Criterion 4c is checked.**

Step 5 Compare Proposed Primary Sidelit Effective Aperture to Minimum Sidelit Effective Aperture

	Minimum Sidelit Effective Aperture	**I**	**0.1**	Minimum Sidelit Effective Aperture
	Enter Proposed Primary Sidelit Effective Aperture from Equation 146- below to calculate cell (J).	**J**		Proposed Primary Sidelit Effective Aperture

❑ **Criterion 5: Check if Proposed Primary Sidelit Effective Aperture is greater than or equal to Minimum Sidelit Effective Aperture (J ≥ I). STOP and fill out remaining questions on the bottom of Step 6.**

EQUATION 146-A: Effective Aperture for Primary Sidelit Area

1. Determine effective aperture of Primary Sidelit Area:

K. Rough opening of windows adjacent to the sidelit are in square feet	**K**		
L. Visible light transmittance of window	**L**		
M. Primary sidelit daylight area determined according to §131(c)1 (Same as cell C Step 2 on page 1)	**M**		
N. Multiply (K) by (L)	**N**		
O. Divide (N) by (M) = effective aperture of primary sidelit area	**O**		Enter results in Cell J above in Step 5

Step 6

Check if both Criterion 1 (page 1) AND Criterion 4 (page 2) are checked	❑ **Space PASSES:**
Check if both Criterion 2 (page 1) AND Criterion 5 (page 2) are checked.	❑ **Space PASSES:**
Check only if all of the following criteria are checked: Criterion 3, Criterion 4 AND Criterion 5.	❑ **Space PASSES:**

DRAFT

OVERALL ENVELOPE APPROACH (Part 3 of 3) ENV- 4C

Skylight Effective Aperture

Project Name:	Date:

EQUATION 146-C: Skylight Effective Aperture

1. Determine Well Cavity Ratio or L/D ratio . *Select one of the well types, fill in well dimensions and calculate the WCR with the appropriate equation below.*

Rectangular. Wells: ❑

Well Height	Well Length	Well Width

$$WCR = \left(\frac{5 \times \text{well height}\left(\text{well length} + \text{well width}\right)}{\text{well length} \times \text{well width}}\right)$$

P.		**Rectangular WCR**

Non-Rectangular Wells: ❑

Well Height	Well Perimeter	Well Area

$$WCR = \left(\frac{2.5 \times \text{well height} \times \text{well perimeter}}{\text{well area}}\right)$$

Q.		**Non-rectangular WCR**

Tubular Specular Light Wells

R. Tube Length (ft)	**R**		**Tube Height**
S. Tube Diameter (ft)	**S**		**Tube Diameter**
T. Divide Tube Length (Height) by Tube Diameter	**T**		**L/D Ratio = (R/S)**

2. Determine Well Efficiency

R. Weighted Average Well Wall Reflectance (%)	**R.**		**Wall**
S. Well Efficiency	**S.**		**Well Efficiency**

✓ From Table 146-A for non-specular or non-tubular light wells

✓ From Table 146-B for specular tubular light wells

3. Calculate Skylight Effective Aperture

T. Total skylight area	**T.**		**Total Skylight Area**
U. Visible transmittance in accordance with description in §146(a)2, Equation 146-C	**U.**		**VT**
V. Multiply 0.85 x (S) x (T) x (U)	**V.**		
W. Divide (V) by (B) = Skylight Effective Aperture (where B = Proposed Skylit Daylight Area)	**W.**		**Skylight Effective Aperture**

4. Enter ratio from cell (W) into ENV-4C (Part 1 of 3) Step 4b cell (H)

DRAFT

CEC DEFAULT U-FACTOR AND SHGC LABEL CERTIFICATE FC-1

PROJECT INFORMATION Form 1 of ____

PROJECT NAME:	DATE:
PROJECT ADDRESS:	

Option 1: For buildings with less than 10,000 ft^2 of site-built fenestration may optionally use either CEC Default Tables 116-A and 116-B or the Alternative Calculation Nonresidential Reference Appendix NA6.

Option 2: For buildings with greater 10,000 ft^2 of site-built fenestration only one option is available, use CEC Default Tables 116-A and 116-B

A separate FC-1 Label Certificate Form is required for each different fenestration product line. Unlabeled manufactured fenestration products including skylights and exterior doors shall meet the air infiltration requirements of §116(a)1 of the 2008 California Energy Efficiency Standards applicable to Residential and Nonresidential Buildings.

Enter the U-factor$_t$ and SHGC$_t$ in the following boxes after completing Options 1 or 2 below.

U-factor$_t$ = ____	**SHGC$_t$ = ____**

PRODUCT LINE INFORMATION (Complete a separate Default Label Certificate for each fenestration product)

Total Number of units for each product:		Total square footage of this product line:	
Schedule location on the building plans – Reference page:		Total Fenestration Area (ft^2) on project:	
Location(s) on building: S, N, E, W			

U-FACTOR INFORMATION FROM DEFAULT TABLE 116-A:

Frame Type	❑ Metal	❑ Metal With Thermal Break		❑ Nonmetal	
Product Type	❑ Operable	❑ Fixed	❑ Greenhouse/ Garden Window	❑ Doors	❑ Skylights
Glazing Type	❑ Single Pane	❑ Double Pane	❑ Glass Block	Insert value in the default U-factor gray box above	

SOLAR HEAT GAIN INFORMATION FROM DEFAULT TABLE 116-B:

Product Type	❑ Operable	❑ Fixed	
Glazing:	❑ Clear	❑ Tinted	Insert value in the default SHGC$_t$ gray box above

GLAZING INFORMATION: Alternative Calculation Reference Nonresidential Appendix NA6

STEP 1: *Determine U-Factor:*	Enter U-factor from Equation NA6-1 and insert above in the gray box next to U-factor		
STEP 2: *Determine SHGC$_t$:*			
Enter the Center of Glass, SHGCc, in the equation below to determine the solar heat gain coefficient with frame, SHGC$_t$.			
Enter Center of Glass, COG, from Manufacturer's Documentation, SHGCc			⟵ Insert Center of Glass value here
Calculate the new SHGC$_t$ of the frame.	SHGC$_t$ = 0.08 + (0.86 x SHGCc) =		⟵ Insert calculated result value here and in above gray box next to SHGC$_t$

STEP 3: ATTACHED MANUFACTURER'S LITERATURE:

Manufacturer's literature must be attached showing the Product Type, Frame Type, Glazing, Center Of Glass(COG) U-factor, and SHGC$_c$ information needed to determine the Default U-factor$_t$ and SHGC$_t$.

PARTY TAKING RESPONSIBILITY FOR FENESTRATION COMPLIANCE:

CONTACT PERSON:	
COMPANY NAME AND ADDRESS:	
PHONE:	FAX:
SIGNATURE:	LICENSE # (if Applicable)

DRAFT

Mechanical Forms

FIELD INSPECTION CHECKLIST — MECHANICAL

Project Name:	Building Type ☐ Nonresidential ☐ High-Rise Residential ☐ Hotel/Motel Guest Room ☐ Addition Alone ☐ Alteration Alone ☐ Relocatable Public School	Date:

Project Address:	Climate Zone:	Total Cond. Floor Area:	Addition or Alteration Floor Area:

HVAC SYSTEMS

Equipment[1, 2]	Inspection Criteria or requirements	Meets Criteria or requirements		If Fail Describe Reason	Results
		Pass	Fail		
Item or System Tags (i.e. AC-1, RTU-1, HP-1)		☐	☐		
Equipment Type: Gas(Pkg or, Split), VAV, HP (Pkg or split), Hydronic, PTAC,or other		☐	☐		
No of Systems	3	☐	☐		
Max Allowed Heating Capacity	6 Tons	☐	☐	8 Tons Installed	
Minimum Heating Efficiency		☐	☐		
Max Allowed Cooling Capacity		☐	☐		
Cooling Efficiency	14 SEER/ 15 EER	☐	☐		
Duct Location/ R-Value		☐	☐		
Duct Leakage Testing - If Yes, a **MECH-4-A** must be provided		☐	☐		
Economizer		☐	☐		
Thermostat		☐	☐		
Fan Control		☐	☐		

Equipment[1,]	Inspection Criteria or requirements	Meets Criteria or requirements		If Fail Describe Reason	Results
		Pass	Fail		
Item or System Tags (i.e. AC-1, RTU-1, HP-1)		☐	☐		
Equipment Type: Gas(Pkg or, Split), VAV, HP (Pkg or split), Hydronic, PTAC,or other		☐	☐		
No of Systems		☐	☐		
Max Allowed Heating Capacity		☐	☐		
Minimum Heating Efficiency		☐	☐		
Max Allowed Cooling Capacity		☐	☐		
Cooling Efficiency		☐	☐		
Duct Location/ R-Value		☐	☐		
Duct Leakage Testing - If Yes, a **MECH-4-A** must be provided		☐	☐		
Economizer		☐	☐		
Thermostat		☐	☐		
Fan Control		☐	☐		

1. If the Actual installed equipment performance efficiency and capacity is less than the Proposed (from the energy compliance submittal or from the building plans) the responsible party shall resubmit energy compliance to include the new changes.

Certificate of Compliance (Part 1 of 3) MECH-1C

Project Name:			Date:
Project Address:	Climate Zone:	Cond. Floor Area:	Addition or Alteration Floor Area:

General Information

Building Type:	☐ Nonresidential	☐ High-Rise Residential	☐ Hotel/Motel Guest Room
	☐ Relocatable	☐ Conditioned Spaces	☐ Unconditioned Spaces
Phase of Construction:	☐ New Construction	☐ Addition	☐ Alteration
Proof of Mechanical Compliance:	☐ Previous Mechanical Permit	☐ Mechanical Compliance Attached	☐ Unconditioned (file affidavit)

Documentation Author's Declaration Statement

- I certify that this Certificate of Compliance documentation is accurate and complete.

Name:	Signature:
Company:	Date:
Address:	EA # CEPE #
City/State/Zip	Phone:

Principal Mechanical Designer's Declaration Statement

- I am eligible under Division 3 of the California Business and Professions Code to accept responsibility for the mechanical design.
- This Certificate of Compliance identifies the mechanical features and performance specifications required for compliance with Title 24, Parts 1 and 6 of the California Code of Regulations.
- The design features represented on this Certificate of Compliance are consistent with the information provided to document this design on the other applicable compliance forms, worksheets, calculations, plans and specifications submitted to the enforcement agency for approval with this building permit application.

Name:	Signature:
Company Name:	Date:
Address:	License #
City/State/Zip	Phone:

Mandatory Measures

Indicate location on building plans of Note Block for Mandatory Measures _____

MECHANICAL COMPLIANCE FORMS & WORKSHEETS (check box if worksheet is included)

For detailed instructions on the use of this and all Energy Efficiency Standards compliance forms, please refer to the 2008 Nonresidential Manual published by the California Energy Commission.

☐	MECH-1C	Certificate of Compliance. Required on plans for all submittals.
☐	MECH-2C	Mechanical Equipment Summary is required for all submittals.
☐	MECH-3C	Mechanical Ventilation and Reheat is required for all submittals with mechanical ventilation.
☐	MECH-4C	Fan Power Consumption is required when for all prescriptive submittals.

Certificate of Compliance

Part 2 of 3) MECH-1C

Project Name	Date

Required Acceptance Tests

Designer:

This form is to be used by the designer and attached to the plans. Listed below are all the acceptance tests for mechanical systems. The designer is required to check the applicable boxes by all acceptance tests that apply and list all equipment that requires an acceptance test. If all equipment of a certain type requires a test, list the equipment description and the number of systems. The NA number designates the Section in the Appendix of the Nonresidential Reference Appendices Manual that describes the test. Since this form will be part of the plans, completion of this section will allow the responsible party to budget for the scope of work appropriately.

Building Departments:

***Systems Acceptance**. Before occupancy permit is granted for a newly constructed building or space, or a new space-conditioning system serving a building or space is operated for normal use, all control devices serving the building or space shall be certified as meeting the Acceptance Requirements for Code Compliance.*
***Systems Acceptance.** Before occupancy permit is granted. All newly installed HVAC equipment must be tested using the Acceptance Requirements.*

*The MECH-1C form is not considered a completed form and is not to be accepted by the building department unless the correct boxes are checked. The equipment requiring testing, person performing the test (Example: HVAC installer, TAB contractor, controls contractor, PE in charge of project) and what Acceptance test must be conducted. The following checked-off forms are required for **ALL** newly installed equipment. In addition a Certificate of Acceptance, MECH-1A, form shall be submitted to the building department that certifies plans, specifications, installation certificates, and operating and maintenance information meet the requirements of §10-103(b) and Title 24 Part 6. The building inspector must receive the properly filled out and signed forms before the building can receive final occupancy.*

☐ MECH-1-A Certificate of Acceptance

Test Description		MECH-2A	MECH-3A	MECH-4A	MECH-5A	MECH-6A	MECH-7A	MECH-8A	MECH-9A	MECH-10A	MECH-11A
Equipment Requiring Testing or verification	# of	Outdoor Ventilation for VAV & CAV	Constant Volume & Single-Zone Unitary	Air Distribution Ducts	Economizer Controls	Demand Control Ventilation DCV	Supply Fan VAV	Valve Leakage Test	Supply Water Temp. Reset	Hydronic System Variable Flow Control	Automatic Demand Shed Control
Carrier 48DJH048	3	☐	☐	☐	☐	☐	☐	☐	☐	☐	☐
		☐	☐	☐	☐	☐	☐	☐	☐	☐	☐
		☐	☐	☐	☐	☐	☐	☐	☐	☐	☐
		☐	☐	☐	☐	☐	☐	☐	☐	☐	☐
		☐	☐	☐	☐	☐	☐	☐	☐	☐	☐
		☐	☐	☐	☐	☐	☐	☐	☐	☐	☐
		☐	☐	☐	☐	☐	☐	☐	☐	☐	☐
		☐	☐	☐	☐	☐	☐	☐	☐	☐	☐
		☐	☐	☐	☐	☐	☐	☐	☐	☐	☐
		☐	☐	☐	☐	☐	☐	☐	☐	☐	☐

Certificate of Compliance

(Part 2 of 3 Con't) **MECH-1C**

Project Name	Date

Test Description		MECH-2A	MECH-3A	MECH-4A	MECH-5A	MECH-6A	MECH-7A	MECH-8A	MECH-9A	MECH-10A	MECH-11A
Equipment Requiring Testing	# of	Outdoor Ventilation for VAV & CAV	Constant Volume & Single-Zone Unitary	Air Distributio n Ducts	Economizer Controls	Demand Control Ventilation DCV	Supply Fan VAV	Valve Leakage Test	Supply Water Temp. Reset	Hydronic System Variable Flow Control	Automatic Demand Shed Control
		☐	☐	☐	☐	☐	☐	☐	☐	☐	☐
		☐	☐	☐	☐	☐	☐	☐	☐	☐	☐
		☐	☐	☐	☐	☐	☐	☐	☐	☐	☐
		☐	☐	☐	☐	☐	☐	☐	☐	☐	☐
		☐	☐	☐	☐	☐	☐	☐	☐	☐	☐
		☐	☐	☐	☐	☐	☐	☐	☐	☐	☐
		☐	☐	☐	☐	☐	☐	☐	☐	☐	☐
		☐	☐	☐	☐	☐	☐	☐	☐	☐	☐
		☐	☐	☐	☐	☐	☐	☐	☐	☐	☐
		☐	☐	☐	☐	☐	☐	☐	☐	☐	☐
		☐	☐	☐	☐	☐	☐	☐	☐	☐	☐
		☐	☐	☐	☐	☐	☐	☐	☐	☐	☐
		☐	☐	☐	☐	☐	☐	☐	☐	☐	☐
		☐	☐	☐	☐	☐	☐	☐	☐	☐	☐
		☐	☐	☐	☐	☐	☐	☐	☐	☐	☐
		☐	☐	☐	☐	☐	☐	☐	☐	☐	☐
		☐	☐	☐	☐	☐	☐	☐	☐	☐	☐
		☐	☐	☐	☐	☐	☐	☐	☐	☐	☐
		☐	☐	☐	☐	☐	☐	☐	☐	☐	☐
		☐	☐	☐	☐	☐	☐	☐	☐	☐	☐
		☐	☐	☐	☐	☐	☐	☐	☐	☐	☐
		☐	☐	☐	☐	☐	☐	☐	☐	☐	☐
		☐	☐	☐	☐	☐	☐	☐	☐	☐	☐
		☐	☐	☐	☐	☐	☐	☐	☐	☐	☐

Certificate of Compliance

(Part 3 of 3 Con't) **MECH-1C**

Project Name	Date

Test Description		MECH-12A	MECH-13A	MECH-14A	MECH-15A	
Equipment Requiring Testing	# of	Fault Detection & Diagnostics for DX Units	Automatic Fault Detection & Diagnostics for Air & Zone	Distributed Energy Storage DX AC Systems	Thermal Energy Storage (TES) Systems	Test Performed By:
Carrier 48DJH048	3	☐	☐	☐	☐	
		☐	☐	☐	☐	
		☐	☐	☐	☐	
		☐	☐	☐	☐	
		☐	☐	☐	☐	
		☐	☐	☐	☐	
		☐	☐	☐	☐	
		☐	☐	☐	☐	
		☐	☐	☐	☐	
		☐	☐	☐	☐	
		☐	☐	☐	☐	
		☐	☐	☐	☐	
		☐	☐	☐	☐	
		☐	☐	☐	☐	
		☐	☐	☐	☐	
		☐	☐	☐	☐	
		☐	☐	☐	☐	
		☐	☐	☐	☐	
		☐	☐	☐	☐	
		☐	☐	☐	☐	
		☐	☐	☐	☐	
		☐	☐	☐	☐	
		☐	☐	☐	☐	
		☐	☐	☐	☐	
		☐	☐	☐	☐	
		☐	☐	☐	☐	
		☐	☐	☐	☐	

AIR SYSTEM REQUIREMENTS

Part 1 of 3) MECH-2C

PROJECT NAME:				DATE:
		Indicate Air Systems Type (Central, Single Zone, Package, VAV or etc…)		
Item or System Tags (i.e. AC-1, RTU-1, HP-1)				
No. of Systems				
		Indicate Page Reference on Plans or Schedule and indicate the applicable exception(s)		
MANDATORY MEASURES	***T-24 Sections***			
Heating Equipment Efficiency	112(a)			
Cooling Equipment Efficiency	112(a)			
Heat Pump Thermostat	112(b)			
Furnace Controls	112(c), 115(a)			
Natural Ventilation	121(b)			
Minimum Ventilation	121(b)			
VAV Minimum Position Control	121(c)			
Demand Control Ventilation	121(c)			
Time Control	121(c), 122(e)			
Setback and Setup Control	122(e)			
Outdoor Damper Control	122(f)			
Isolation Zones	122(g)			
Pipe Insulation	123			
Duct Insulation	124			
PRESCRIPTIVE MEASURES				
Calculated Heating Capacity	144(a & b)			
Proposed Heating Capacity	144(a & b)			
Calculated Cooling Capacity	144(a & b)			
Proposed Cooling Capacity	144(a & b)			
Fan Control	144(c)			
DP Sensor Location	144(c)			
Supply Pressure Reset (DDC only)	144(c)			
Simultaneous Heat/Cool	144(d)			
Economizer	144(e)			
Heat and Cool Air Supply Reset	144(f)			
Electric Resistance Heating[1]	144(g)			
Heat Rejection System	§144 (h)			
Air Cooled Chiller Limitation	§144 (i)			
Duct Sealing	144(k)			

1. Total installed capacity (MBtu/hr) of all electric heat on this project exclusive of electric auxiliary heat for heat pumps. If electric heat is used explain which exception(s) to §144(g) apply.

WATER SIDE SYSTEM REQUIREMENTS

Part 2 of 3) MECH-2C

PROJECT NAME:

DATE:

		WATER[2] SIDE SYSTEMS: Chillers, Towers, Boilers, Hydronic Loops					
Item or System Tags (i.e. AC-1, RTU-1, HP-1)[1]							
No. of Systems							
	Indicate Page Reference on Plans or Specification[2]						
MANDATORY MEASURES	***T-24 Sections***						
Calculated Capacity	112(a)						
Proposed Capacity	123						
PRESCRIPTIVE MEASURES							
Tower Fan Controls	144(a & b)						
Tower Flow Controls	144(h)						
Variable Flow System Design	144(h)						
Chiller and Boiler Isolation	144(j)						
CHW and HHW Reset Controls	144(j)						
WLHP Isolation Valves	144(j)						
VSD on CHW, CW & WLHP Pumps >5HP	144(j)						
DP Sensor Location	144(j)						

1. The Proposed equipment need to match the building plans schedule or specifications. If a requirement is not applicable, put "N/A" in the column next to applicable section.

2. For each chiller, cooling tower, boiler, and hydronic loop (or groups of similar equipment) fill in the reference to sheet number and/or specification section and paragraph number where the required features are documented. If a requirement is not applicable, put "N/A" in the column next to applicable section.

SERVICE HOT WATER & POOL REQUIREMENTS (Part 3 of 3) MECH-2C

PROJECT NAME: **DATE:**

		Service Hot Water, Pool Heating					
Item or System Tags (i.e. AC-1, RTU-1, HP-1)[1]							
No. of Systems							
	Indicate Page Reference on Plans or Schedule[2]						
MANDATORY MEASURES	***T-24 Section***						
Water Heater Certification	§113 (a)						
Water Heater Efficiency	§113 (b)						
Service Water Heating Installation	§113 (c)						
Pool and Spa Efficiency and Control	§114 (a)						
Pool and Spa Installation	§114 (b)						
Pool Heater – No Pilot Light	§115 (c)						
Spa Heater – No Pilot Light	§115 (d)						

1: The Proposed equipment need to match the building plans schedule or specifications. If a requirement is not applicable, put "N/A" in the column next to applicable section.

2: For each water heater, pool heat and domestic water loop (or groups of similar equipment) fill in the reference to sheet number and/or specification section and paragraph number where the required features are documented. If a requirement is not applicable, put "N/A" in the column.

MECHANICAL VENTILATION AND REHEAT

MECH-3C

PROJECT NAME	DATE

MECHANICAL VENTILATION (§121(b)2)									REHEAT LIMITATION (§144(d))				
	AREA BASIS			OCCUPANCY BASIS					VAV Minimum				
A	B	C	D	E	F	G	H	I	J	K	L	M	N
Zone/ System	Condition Area (ft²)	CFM per ft²	Min CFM by Area B x C	Num of People	CFM per Person	Min CFM by Occupant E x F	REQ'D V.A. Max of D or G	Design Ventilation Air cfm	50% of Design Zone Supply cfm	B x 0.4 cfm/ft²	Max of Columns H, J, K, 30 cfm	Design minimum Air setpoint	Transfer Air
					15								
					15								
					15								
					15								
					15								
					15								
					15								
					15								
					15								
					15								
					15								
					15								
Totals									Column I Total Design Ventilation Air				

C	*Minimum ventilation rate per Section §121, Table 121-A.*
E	*Based on fixed seat or the greater of the expected number of occupants and 50% of the CBC occupant load for egress purposes for spaces without fixed seating.*
H	*Required Ventilation Air (REQ'D V.A.) is the larger of the ventilation rates calculated on an AREA BASIS or OCCUPANCY BASIS (Column D or G).*
I	*Must be greater than or equal to H, or use Transfer Air (column N) to make up the difference.*
J	*Design fan supply cfm (Fan CFM) x 50%; or the design zone outdoor airflow rate per §121.*
K	*Condition area (ft²) x 0.4 cfm/ft²; or*
L	*Maximum of Columns H, J, K, or 300 cfm*
M	*This must be less than or equal to Column L and greater than or equal to the sum of Columns H plus N.*
N	*Transfer Air must be provided where the Required Ventilation Air (Column H) is greater than the Design Minimum Air (Column M). Where required, transfer air must be greater than or equal to the difference between the Required Ventilation Air (Column H) and the Design Minimum Air (Column M), Column H minus M.*

FAN POWER CONSUMPTION

MECH-4C

PROJECT NAME:	DATE:

NOTE: *Provide one copy of this worksheet for each fan system with a total fan system horsepower greater than 25 hp for Constant Volume Fan Systems or Variable Air Volume (VAV) Systems when using the Prescriptive Approach. See* ***Power Consumption of fans§144(c).***

A	B	C	D	E	F
FAN DESCRIPTION	**DESIGN BRAKE HP**	**EFFICIENCY**		**NUMBER OF FANS**	**PEAK WATTS** B x E x 746 / (C x D)
		MOTOR	**DRIVE**		

FILTER PRESSURE ADJUSTMENT Equation 144-A in *§144(c).*	1) TOTAL FAN SYSTEM POWER (WATTS, SUM COLUMN F)	
A) If filter pressure drop (SP_a) is greater than 1 inch W. C. or 245 Pascal then enter SP_a on line 4. Enter Total Fan pressure drop across the fan (SP_f) on Line 5.	2) SUPPLY DESIGN AIRFLOW (CFM)	
	3) TOTAL FAN SYSTEM POWER INDEX (Row 1 / Row 2)[1]	W/CFM
	4) SP_a	
B) Calculate Fan Adjustment and enter on line 6.	5) SP_f	
	6) Fan Adjustment = $1-(SP_a – 1)/SP_f$	
C) Calculate Adjusted Fan Power Index and enter on Row 7	7) ADJUSTED FAN POWER INDEX (Line 3 x Line 6)[1]	W/CFM

1. TOTAL FAN SYSTEM POWER INDEX or ADJUSTED FAN POWER INDEX must not exceed 0.8 w/cfm, for Constant Volume systems or 1.25 w/cfm for VAV systems.

2008 Indoor Lighting Compliance Forms

Prescriptive - Certificate of Compliance — Inspection

Project Name	Building Type	Date
Eastside School	☐ Nonresidential ☐ High-Rise Residential ☐ Hotel/Motel Guest Room ☐ Relocatable School Bldg. ☐ Addition Alone ☐ Alteration Alone	7/24/08

Project Address	Climate Zone	Total Cond. Floor Area	Addition or Alteration Floor Area
100 South Drive, Oakland, CA	CA Climate Zone 3	1,250 ft^2	250 ft^2

FIELD INSPECTION ENERGY CHECKLIST

LUMINAIRES Description	#	Lamp Description	Lighting Control	
13 Watt CFL	**16**	**13W/GX1320**	**None**	
4' Linear Fluorescent	**123**	**F32T8**	**Occupancy Sensor < 250 sqft**	

MANDATORY CONTROLS	Description	Location
Automatic Lighting Shutoff Time- clock	**NE Electrical Room**	
Automatic Daylighting Controls	**North Perimeter Zone**	

DRAFT

Certificate of Compliance (Part 1 of 2) LTG-1C

Project Name		Date
Project Address	Climate Zone	Total Cond. Floor Area

General Information

Building Type:	☐ Nonresidential	☐ High-Rise Residential	☐ Hotel/Motel Guest Room
	☐ Relocatable	☐ Conditioned Spaces	☐ Unconditioned Spaces
Phase of Construction:	☐ New Construction	☐ Addition	☐ Alteration
Method of Compliance:	☐ Complete Building	☐ Area Category	☐ Tailored

Documentation Author's Declaration Statement

- I certify that this Certificate of Compliance documentation is accurate and complete.

Name	Signature
Company	Date
Address	EA # CEPE #
City/State/Zip	Phone:

Principal Lighting Designer's Declaration Statement

- I am eligible under Division 3 of the California Business and Professions Code to accept responsibility for the lighting design.
- This Certificate of Compliance identifies the lighting features and performance specifications required for compliance with Title 24, Parts 1 and 6 of the California Code of Regulations.
- The design features represented on this Certificate of Compliance are consistent with the information provided to document this design on the other applicable compliance forms, worksheets, calculations, plans and specifications submitted to the enforcement agency for approval with this building permit application.

Name:	Signature
Company:	Phone
Address:	License #
City/State/Zip:	Date

Envelope Mandatory Measures
Indicate location on building plans of Mandatory Measures Note Block: _____

LIGHTING COMPLIANCE FORMS & WORKSHEETS (check box if worksheet is included)

For detailed instructions on the use of this and all Energy Efficiency Standards compliance forms, please refer to the Nonresidential Manual published by the California Energy Commission.

☐	**LTG-1C**	**Certificate of Compliance. Required on plans for all submittals.**
☐	**LTG-2C**	**Indoor Lighting Schedule**
☐	**LTG-3C**	**Lighting Controls Credit Worksheet**
☐	**LTG-4C**	**Indoor Lighting Power Allowance**
☐	**LTG-5C**	**Tailored Method Worksheet**
☐	**LTG-6C**	**Room Cavity Ratio Worksheet**
☐	**LTG-7C**	**Line Voltage Track Lighting Worksheet**

DRAFT

Certificate of Compliance (Part 2 of 2) LTG-1C

Project Name:	Date:

Conditioned and Unconditioned space Lighting must not be combined for compliance.

Indoor Lighting Power for Conditioned Spaces		Indoor Lighting Power for Unconditioned Spaces	
	Watts		Watts
Installed Lighting (from LTG-2C part 1)	12,000	**Installed** Lighting (from LTG-2C part 2)	17,000
Lighting Control Credit (from LTG-3C part 1)	- 3,000	Lighting Control Credit (from LTG-3C part 2)	- 6,000
Adjusted **Installed** Lighting Power	= 10,000	Adjusted **Installed** Lighting Power	11,000
Complies if **Installed** ≤ **Allowed**	↕	Complies if **Installed** ≤ **Allowed**	↕
Allowed Lighting Power (from LTG-4C)	12,000	**Allowed** Lighting Power (from LTG-4C)	15,000

Required Acceptance Tests

The following Acceptance Forms shall be submitted to the building department before an occupancy permit is granted for a newly constructed building or space. All control devices serving the building or space shall be certified as meeting the Acceptance Requirements for Code Compliance. List all equipment requiring testing, and indicated required acceptance documents.

☐ LTG-1-A Certificate of Acceptance

Equipment Requiring Testing	Luminaires Controlled		Location	LTG-2A Mandatory Controls	LTG-3A Credit Controls
	Description	#			
Occupancy Sensor	Linear 4' T-8 fixtures	12	South East Offices	☐	☐
				☐	☐
				☐	☐
				☐	☐
				☐	☐
				☐	☐
				☐	☐
				☐	☐
				☐	☐
				☐	☐
				☐	☐
				☐	☐
				☐	☐
				☐	☐
				☐	☐
				☐	☐
				☐	☐
				☐	☐
				☐	☐
				☐	☐
				☐	☐
				☐	☐
				☐	☐
				☐	☐
				☐	☐
				☐	☐
				☐	☐
				☐	☐
				☐	☐

DRAFT

INDOOR LIGHTING SCHEDULE (Part 1 of 2) LTG-2C

PROJECT NAME | DATE

INSTALLED LIGHTING POWER FOR CONDITIONED SPACES

✓

☐ The actual indoor lighting power listed below includes all installed permanent and portable lighting systems in accordance with §146(a)

☐ Only for offices, up to the first 0.2 watts per square foot of portable lighting shall not be required to be included in the calculation of actual indoor lighting power density in accordance with the Exception to §146(a). Therefore, entries below for any office include only portable lighting in excess of 0.2 watts per square foot.

Luminaire (Type, Lamps, Ballasts)		Installed Watts				
A	B	C	D		E	F
			✓ how wattage was determined			
Name	Luminaire Description: Type of Luminaire (i.e.: surface, pendant, troffer); Lamp wattage and type; Ballast type; Number of lamps and ballasts per luminaire;	Watts per Luminaire	CEC Default from NA-8	According to §130(d)	Number of Luminaires	Installed Watts (C x E)

PAGE TOTAL

BUILDING TOTAL (sum of all pages) +

CONTROL CREDIT (from LTG-3C) -

ADJUSTED ACTUAL WATTS =

DRAFT

INDOOR LIGHTING SCHEDULE (Part 2 of 2) LTG-2C

PROJECT NAME	DATE

INSTALLED LIGHTING POWER FOR UNCONDITIONED SPACES

✓

☐ The actual indoor lighting power listed below includes all installed permanent and portable lighting systems in accordance with §146(a)

☐ Only for offices, up to the first 0.2 watts per square foot of portable lighting shall not be required to be included in the calculation of actual indoor lighting power density in accordance with the Exception to §146(a). Therefore, entries below for any office include only portable lighting in excess of 0.2 watts per square foot.

Luminaire (Type, Lamps, Ballasts)		Installed Watts				
A	B	C	D		E	F
Name	Luminaire Description: Type of Luminaire (i.e.: surface, pendant, troffer); Lamp wattage and type; Ballast type; Number of lamps and ballasts per luminaire;	Watts per Luminaire	✓ how wattage was determined: CEC Default from NA-8	✓ how wattage was determined: According to §130(d)	Number of Luminaires	Installed Watts (C x E)

BUILDING TOTAL (sum of all pages)	+
CONTROL CREDIT (from LTG-3C	+
ADJUSTED ACTUAL WATTS	+

DRAFT

LIGHTING CONTROLS CREDIT WORKSHEET (Part 1 of 2) LTG-3C

POWER ADJUSTMENT FACTORS (PAF) FOR CONDITIONED SPACES

PROJECT NAME	DATE

A	B	C	D	E	F	G	H	I	J
				DAYLIGHTING					
ROOM #, ZONE ID CONDITIONED AREAS	LIGHTING CONTROL DESCRIPTION	PLAN REFERENCE	ROOM AREA (ft^2)	WINDOW OR SKYLIGHT AREA	GLAZING VT	SKYLIGHT EFFECTIVE APERTURE[1]	WATTS OF CONTROL LIGHTING	LIGHTING ADJUSTMENT FACTOR[2]	CONTROL CREDIT WATTS (H X I)

LIGHTING CONTROLS CREDIT WORKSHEET (Part 2 of 2) LTG-3C

POWER ADJUSTMENT FACTORS (PAF) FOR UNCONDITIONED SPACES

PROJECT NAME	DATE

A	B	C	D	E	F	G	H	I	J
				DAYLIGHTING					
ROOM # ZONE ID UNCONDITIONED AREAS	LIGHTING CONTROL DESCRIPTION	PLANS REFERENCE	ROOM AREA (ft^2)	WINDOW OR SKYLIGHT AREA	GLAZING VT	SKYLIGHT EFFECTIVE APERTURE[1]	WATTS OF CONTROL LIGHTING	LIGHTING ADJUSTMENT FACTOR[2]	CONTROL CREDIT WATTS (H X I)

INDOOR LIGHTING POWER ALLOWANCE LTG-4C

PROJECT NAME	DATE

ALLOWED LIGHTING POWER (Choose One Method)

COMPLETE BUILDING METHOD– CONDITIONED SPACES

BUILDING CATEGORY (From §146 Table 146-E)	**WATTS PER** (ft^2)	**COMPLETE BLDG. AREA**	**ALLOWED WATTS**

AREA CATEGORY METHOD – CONDITIONED SPACES

A	B	C	D
AREA CATEGORY (From §146 Table 146-F)	**WATTS PER** (ft^2)	**AREA** (ft^2)	**ALLOWED WATTS**
	TOTALS	AREA	WATTS

TAILORED METHOD– CONDITIONED SPACES

TOTAL ALLOWED WATTS (From **LTG-5C**)

UNCONDITIONED SPACES

A	B	C	D
Complete Building and Area Category Methods CATEGORY (From §146 Tables 146-E & F)	**WATTS PER** (ft^2)	**AREA** (ft^2)	**ALLOWED WATTS**
	TOTALS	AREA	WATTS

TAILORED METHOD– UNCONDITIONED SPACES

TOTAL **UNCONDITIONED SPACES** ALLOWED WATTS (From LTG-5C and LTG-6C)

DRAFT

TAILORED METHOD WORKSHEET (Part 1 of 3) LTG-5C

PROJECT NAME	DATE

TAILORED METHOD SUMMARY-Separate Tailored Method Worksheets Must Be Filled Out For Conditioned And Unconditioned Spaces

1. Watts for Illuminance Categories (from Tailored LPD Total below) → [ ] WATTS

2. Watts for Display Lighting

[ ] + [ ] + [ ] + [ ] = [ ] WATTS

Wall Display from LTG-5C Part 2 of 3 | Floor Display from LTG-5C Part 2 of 3 | Ornamental/ Special Effects Display from LTG-5C Part 3 of 3 | Very Valuable Merchandise from LTG-5C Part 3 of 3

3. Total Allowed Watts (lines 1+2) → [ ] WATTS

TAILORED LPD - Illuminance Categories from Table 146-G

A	B	C			D	E	F
ROOM NUMBER	ILLUMINANCE CATEGORY[1]	ROOM CAVITY RATIO	RCR FROM **LTG-6C**? **Y**	**N**	FLOOR AREA FOR PRIMARY FUNCTION[2]	ALLOWED LPD [3]	ALLOWED WATTS (DX E)
			☐	☐			
			☐	☐			
			☐	☐			
			☐	☐			
			☐	☐			
			☐	☐			
			☐	☐			
			☐	☐			
			☐	☐			
			☐	☐			
			☐	☐			
			☐	☐			
			☐	☐			
			☐	☐			
			☐	☐			
			☐	☐			
			☐	☐			
			☐	☐			
			☐	☐			
		PAGE TOTAL				ft^2	Watts
		BUILDING TOTAL				ft^2	Watts

1) From Table 146-G Column 2 or *IESNA Handbook*
2) Floor area must be for Primary Function type listed in Table 146-G Column 1. Floor area using the Area Category Method shall not be included
3) In accordance with Table 146-I

DRAFT

TAILORED METHOD WORKSHEET (Part 2 of 3) LTG-5C

PROJECT NAME | DATE

DISPLAY LIGHTING: WALLS

✓ ☐ Qualifying wall display lighting systems shall be mounted within 10 ft to a wall, See §146(b)3B.

A	B	C	D	E	F	G	H	I	J	K
			ALLOTTED WATTS			DESIGN WATTS				
TASK / ACTIVITY	MOUNTING HEIGHT	MOUNT HEIGHT FACTOR[1]	WALL DISPLAY Length in Linear Feet	WALL Display[2] Power in Watts per Linear Feet	ALLOTED WATTS (C X D X E)	LUMIN. CODE	LUMIN QTY.	WATTS/ LUMIN.	DESIGN WATTS (H X I)	ALLOWED WATTS (Min. F or J)

TOTAL LENGTH OF DISPLAY WALLS ____ ft^2 TOTAL WATTS ____

Enter on Line 2, Part 1 of LTG-5C

1) From Table 146-H.
2) From Table 146-G Column 3.

DISPLAY LIGHTING: FLOORS

✓ ☐ Qualifying floor display lighting systems shall be mounted no closer than 2 ft to a wall, See §146(b)3B.

A	B	C	D	E	F	G	H	I	J	K
			ALLOTTED WATTS			DESIGN WATTS				
				ALLOTTED						
LIGHTING DESCRIPTION	MOUNTING HEIGHT	MOUNT HEIGHT FACTOR[4]	FLOOR AREA[5] (ft^2)	FLOOR DISPLAY[6] Power in W/ft^2	ALLOTED WATTS (C X D X E)	LUMIN. CODE	LUMIN QTY.	WATTS/ LUMIN.	DESIGN WATTS (H X I)	ALLOWED WATTS (Min. F or J)

TOTAL AREA FLOOR DISPLAYS ____ ft^2 TOTAL WATTS ____

4) From table 146-H as appropriate.
5) This shall be the floor area of the primary function in accordance with 146(c)3B(ii) and Table-146-G Column 1
6) From Table 146-G Column 4.

DRAFT

TAILORED METHOD WORKSHEET (Part 3 of 3) LTG-5C

PROJECT NAME	DATE

DISPLAY LIGHTING: ORNAMENTAL/SPECIAL EFFECTS

A	B	C	D	E	F	G	H	I
	ALLOTTED WATTS			DESIGN WATTS				
LIGHTING DESCRIPTION	FLOOR AREA [1] (ft^2)	Ornamental/ Special Effects Lighting [2] W/ft^2	ALLOTTED WATTS (B XC)	LUMINAIRE CODE	QUANTITY	WATTS/ LUMIN.	DESIGN WATTS (F X G)	**ALLOWED WATTS** (Minimum of D or H)

TOTAL DISPLAY AREA [ ] ft^2 TOTAL WATTS [ ]

1) This shall be the floor area of the primary function in accordance with 146(c)3B(iii) and Table-146-G Column 1

2) See Table 146-G Column 5.

DISPLAY LIGHTING: VERY VALUABLE MERCHANDISE OR OTHER VERY VALUABLE DISPLAY [3]

A	B	C	D	E	F	G	H	I	J	K	L
	ALLOTTED WATTS						DESIGN WATTS				
LUMINAIRE NAME OR LOCATION	FLOOR AREA[4] (ft^2)	VALUABLE DISPLAY POWER[5] W/ft^2	FUNCTION AREA WATTS (B X C)	DISPLAY CASE AREA[6] (ft^2)	20 WATTS PER (ft^2)	DISPLAY CASE AREA WATTS (E X F)	LUMINAIRE CODE	QUANTITY	WATTS / LUMINAIRE	DESIGN WATTS (I X J)	**ALLOWED WATTS** (Minimum of D, G or K)
		1.0			16						
		1.0			16						
		1.0			16						
		1.0			16						
		1.0			16						
		1.0			16						

TOTAL AREA [ ] ft^2 TOTAL AREA [ ] ft^2 TOTAL WATTS [ ]

3) This allowance is available only for retail merchandise sales, museum, and religious worship in accordance with 146(c)3B(iv).

4) This shall be the floor area of the primary function in accordance with 146(c)3B(iv) and Table-146-G Column 1

5) See §146(c)3B(iv)(a)

6) This shall be the area of the top of the display case.

DRAFT

ROOM CAVITY RATIO WORKSHEET (RCR 3.5) LTG-6C

PROJECT NAME		FOR ENFORCEMENT AGENCY USE ONLY	
DOCUMENTATION AUTHOR	DATE	PLAN CHECKED BY	DATE

RECTANGULAR SPACES

A	B	C	D	E	F
Room Number	Task/Activity Description	Room Length (L) (ft)	Room Width (W) (ft)	Room Cavity Height (H) (ft)	Room Cavity Ratio 5 x H x (L+W) / (L x W)

NON-RECTANGULAR SPACES

A	B	C	D	E	F
Room Number	Task/Activity Description	Room Area (A) (ft^2)	Room Perimeter (P) (ft)	Room Cavity Height (H) (ft)	Room Cavity Ratio 2.5 x H x P / A

DRAFT

LINE VOLTAGE TRACK LIGHTING WORKSHEET (Part 1 of 2) LTG-7C

PROJECT NAME	DATE

✓ ☐ METHOD 1 – VOLT-AMPERE (VA) RATING OF THE BRANCH CIRCUIT(S)

✓

☐ This is the only option available for determining wattage of line-voltage busway and track rated for more than 20 amperes

☐ One of four option available for determining wattage of line-voltage busway and track rated for 20 amperes or less

A	B
BRANCH CIRCUIT NAME OR ID	VOLT-AMPERE (VA) RATING OF THE BRANCH CIRCUIT
TOTAL: Enter total on the bottom of LTG-7C Part 2 of 2	

✓ ☐ METHOD 2 – USE THE HIGHER OF: 45 WATTS / LINEAR FOOT OF TRACK – OR TOTAL RATED WATTAGE OF ALL LUMINAIRES

✓

☐ One of four option available for determining wattage of line-voltage busway and track rated for 20 amperes or less

A	B	C	D	E	F
TRACK # OR NAME	LINEAR FEET OF TRACK	(W/LF)	B x C (W)	TOTAL RATED WATTAGE OF ALL LUMINAIRES	LARGER OF (D or E)
		45			
		45			
		45			
		45			
		45			
		45			
		45			
		45			
		45			
		45			
		45			
		45			
		45			
		45			
		45			
		45			
TOTAL Enter total on the bottom of LTG-7C Part 2 of 2					

DRAFT

LINE VOLTAGE TRACK LIGHTING WORKSHEET (Part 2 of 2) LTG-7C

PROJECT NAME	DATE

✓ ☐ METHOD 3 – USE THE HIGHER OF: 12.5 WATTS / LINEAR FOOT OF TRACK – OR VA RATING OF INTEGRAL CURRENT LIMITER

✓

☐ One of four option available for determining wattage of line-voltage busway and track rated for 20 amperes or less

☐ Only integral current limiters which are certified to the Energy Commission use this method.

A	B	C	D	E	F
TRACK # OR NAME	LINEAR FEET OF TRACK	(W/LF)	B x C (W)	VA RATING OF INTEGRAL CURRENT LIMITER	LARGER OF (D or E)
		12.5			
		12.5			
		12.5			
		12.5			
		12.5			
		12.5			
				TOTAL: Enter total on the bottom of this page	

✓ ☐ METHOD 4 – DEDICATED TRACK LIGHTING OVERCURRENT PROTECTION PANEL

✓

☐ One of four option available for determining wattage of line-voltage busway and track rated for 20 amperes or less

☐ Overcurrent protection panel is listed as defined in §101 in accordance with §130(d)3B(iv)a.

☐ Overcurrent protection panel is used only with track lighting in accordance with §130(d)3B(iv)b.

☐ Overcurrent protection panel is permanently installed in an electrical equipment room or permanently installed adjacent to the lighting panel board providing supplementary overcurrent protection for the track lighting circuits served by the supplementary overcurrent protection panel in accordance with §130(d)3B(iv)c.

☐ Overcurrent protection panel is prominently labeled in accordance with §130(d)3B(iv)d.

A	B	C	D	E
OVERCURRENT PROTECTION PANEL NAME OR ID	VOLTAGE OF THE BRANCH CIRCUIT	COMPLETE LIST OF AMPERAGE RATING FOR EACH OVERCURRENT PROTECTION DEVICE INSTALLED IN THE PANEL	SUM OF THE AMPERE RATING OF ALL OVERCURRENT PROTECTION DEVICES	SUM OF THE AMPERE RATING OF ALL OF THE OVERCURRENT PROTECTION DEVICES TIMES THE BRANCH CIRCUIT VOLTAGE (B x D)
				TOTAL: Enter total on the bottom of this page

✓ ☐ TOTALS OF ALL METHODS USED TO DETERMINE THE WATTAGE OF LINE-VOLTAGE TRACK AND PLUG-IN BUSWAY

ENTER TOTAL FROM METHOD 1	
ENTER TOTAL FROM METHOD 2	
ENTER TOTAL FROM METHOD 3	
ENTER TOTAL FROM METHOD 4	
TOTAL TRACK / BUSWAY WATTAGE:	

DRAFT

Outdoor Lighting Forms - Compliance

DRAFT

Certificate of Compliance (Part 1 of 4) OLTG-1C

Project Name	Phase of Construction ☐ New Construction ☐ Addition ☐ Alteration Outdoor Lighting zone ☐ OLZ 1 ☐ OLZ 2 ☐ OLZ 3 ☐ OLZ 4	Date
Eastside School		8/07/08

Project Address	Total Site Area
100 South Drive, Oakland, CA	5,000 ft^2

FIELD INSPECTION ENERGY CHECKLIST

LUMINAIRES

Description	#	Lamp	Lighting Control
13 Watt CFL	**16**	**13W/GX1320**	**photo control**
4' Linear Fluorescent	**12**	**3 F32T8**	**Astronomical time switch**

MANDATORY CONTROLS

Description	Location
Photo control	**On top of pole**
Astronomical Time Switch	**NE Electrical Room**

DRAFT

Certificate of Compliance (Part 2 of 4) OLTG-1C

Project Name	Date
Project Address	Total Site Area

General Information

Phase of Construction: ☐ New Construction ☐ Addition ☐ Alteration

Documentation Author's Declaration Statement

- I certify that this Certificate of Compliance documentation is accurate and complete.

Name	Signature
Company	Date
Address	EA # CEPE #
City/State/Zip	Phone:

Principal Lighting Designer's Declaration Statement

- I am eligible under Division 3 of the California Business and Professions Code to accept responsibility for the lighting design.
- This Certificate of Compliance identifies the lighting features and performance specifications required for compliance with Title 24, Parts 1 and 6 of the California Code of Regulations.
- The design features represented on this Certificate of Compliance are consistent with the information provided to document this design on the other applicable compliance forms, worksheets, calculations, plans and specifications submitted to the enforcement agency for approval with this building permit application.

Name:	Signature
Company:	Phone
Address:	License #
City/State/Zip:	Date

LIGHTING COMPLIANCE FORMS & WORKSHEETS (check box if worksheet is included)

For detailed instructions on the use of this and all Energy Efficiency Standards compliance forms, please refer to the Nonresidential Manual published by the California Energy Commission.

☐	OLTG-1C		Certificate of Compliance. Required on plans for all submittals
☐	OLTG-2C	(Part 1 of 4)	Outdoor Lighting Compliance Fixture Schedule
☐	OLTG-2C	(Part 2 of 4)	Lighting Wattage Allowances for General Hardscape, Sales Frontage, or Ornamental Lighting
☐	OLTG-2C	(Part 3 of 4)	Lighting Wattage Allowances for Per Application or Per Area
☐	OLTG-2C	(Part 4 of 4)	Additional Lighting Power Allowance for Ordinance Requirements

DRAFT

Certificate of Compliance (Part 3 of 4) OLTG-1C

Project Name:	Date:

A. OUTDOOR LIGHTING ZONE

OUTDOOR LIGHTING ZONE: ☐ OLZ 1 ☐ OLZ 2 ☐ OLZ 3 ☐ OLZ 4

Is the Outdoor Lighting Zone: ☐ Default in accordance with §10-114, or ☐ Amended by JHA

Complete the information below if the default Outdoor Lighting Zone has been amended by the local jurisdiction having authority (JHA):

☐ The site is a government designated park, recreation area, wildlife preserve, or portion thereof, and has been designated as LZ2 or LZ3, in accordance with Table 10-114-A, because the site is contained within such a zone.
☐ The local jurisdiction having authority has officially adopted a change to the State Default Lighting Zone and has notified the Energy Commission by providing the materials required in §10-114(d) to the Executive Director.
☐ The adopted change is posted on the Energy Commission website.

B. ADDITIONAL LIGHTING POWER ALLOWANCE FOR ORDINANCE REQUIREMENTS

Are additional lighting power allowances for ordinance in Table 147-C used? ☐ Yes ☐ No

Complete the information below if additional lighting power allowances for ordinance requirements are used:

☐ The local jurisdiction having authority has officially adopted specific outdoor light levels, which are expressed as average or minimum footcandle levels, by following a public process that allowed for formal public notification, review, and comment about the proposed change.
☐ The local jurisdiction having authority which adopted specific outdoor light levels and has notified the Commission by providing the following materials required §10-114(f) to the Executive Director.

C. ACCEPTANCE FORMS

The following Acceptance Forms shall be submitted to the building department before an occupancy permit is granted for a newly constructed building or space. All control devices serving the building or space shall be certified as meeting the Acceptance Requirements for Code Compliance. List all equipment requiring testing, and indicated required acceptance documents.

☐ OLTG-1-A Certificate of Acceptance

	Luminaires Controlled		
Equipment Requiring Testing	Description	#	Location
Motion Sensor	Post-top MH shoebox	12	East Parking Lot

DRAFT

PROJECT NAME DATE

ALLOWED AND INSTALLED OUTDOOR LIGHTING POWER

		Lighting Wattage Power Allowance
A	Lighting power allowance for general hardscape (from OLTG-2C Part 2 of 4)	
B	Specific application lighting wattage allowance per unit length (from OLTG-2C Part 2 of 4)	
C	Specific application wattage allowance for ornamental lighting (from OLTG-2C Part 2 of 4)	
D	Specific application wattage allowance per application (from OLTG-2C Part 2 of 4)	
E	Specific application lighting wattage allowance per area (from OLTG-2C Part 2 of 4)	
F	Additional lightig power allowance for ordinance requirements (from OLTG-2C Part 2 of 4)	
G	Total Allowed Wattage = Sum of rows A through G:	
H	Total installed watts (from Compliance Fixture Schedule, (from OLTG-2C (Part 1 of 4)	

☐ **Yes** Complies if wattage in row H is less than or equal to the wattage in row G

DRAFT

OUTDOOR LIGHTING WORKSHEET

(Part 1 of 4) **OLTG-2C**

PROJECT NAME	DATE

COMPLIANCE FIXTURE SCHEDULE

Luminaire		Installed Watts				
A	**B**	**C**	**D**		**E**	**F**
Name or Symbol	Luminaire Description: Type of Luminaire (i.e.: post top, wall pack, surface); Lamp wattage and type; Ballast type; Number of lamps and ballasts per luminaire.	Watts per Luminaire	✓ how wattage was determined		Number of Luminaires	Installed Watts (C x E)
			CEC Default from NA-8	According to §130(d)		
Enter total into OLTG-1C; Part 4 of 4; Row H; Total Installed Watts:						

DRAFT

OUTDOOR LIGHTING WORKSHEET (Part 2 of 4) OLTG-2C

PROJECT NAME	DATE

A. LIGHTING POWER ALLOWANCE FOR GENERAL HARDSCAPE

AREA WATTAGE ALLOWANCE (AWA)			LINEAR WATTAGE ALLOWANCE (LWA)			INITIAL WATTAGE ALLOWANCE	TOTAL GENERAL HARDSCAPE LIGHTING ALLOWANCE
A	B	C	D	E	F	G	H
ILLUMINATED HARDSCAPE AREA	AWA PER SQUARE FOOT [1]	AWA (A x B)	PERIMETER LENGTH OF GENERAL HARDSCAPE	LWA PER LINEAR FOOT	LWA (D x E)	IWA (WATTS)	C + F + G
Enter total into OLTG-1C; Part 4 of 4; Row A; Lighting Power Allowance for General Hardscape:							

☐ **Yes**: AWA, LWA, and IWA from Table 147-A was used as appropriate for the Outdoor Lighting Zone

B. SPECIFIC APPLICATION LIGHTING WATTAGE ALLOWANCE PER UNIT LENGTH (Available only for sales frontage)

DETERMINE WATTAGE ALLOWANCE				LUMINAIRE TYPE			DESIGN WATTS			
A	B	C	D	E	F	G	H	I	J	K
Specific Lighting Application	Linear Feet of Frontage	Sales Frontage allowance for OLZ (watts per lf)	Wattage Allowance (B x C)	Code for Luminaire Type	Luminaire Type	Cutoff Designation	Luminaire Quantity	Watts per Luminaire	Design Watts (H x I)	Allowed Watts Minimum of D or J
Outdoor Sales Frontage										
Enter total into OLTG-1C; Part 4 of 4; Row B; Specific Application Lighting Wattage Allowance Per Unit Length										

C. SPECIFIC APPLICATION WATTAGE ALLOWANCE FOR ORNAMENTAL LIGHTING

DETERMINE WATTAGE ALLOWANCE				LUMINAIRE TYPE			DESIGN WATTS			
A	B	C	D	E	F	G	H	I	J	K
Specific Lighting Application	Square feet of Hardscape	Ornamental Lighting Allowance for OLZ (watts per ft^2)	Wattage Allowance (B x C)	Code for Luminaire Type	Luminaire Type	Cutoff Designation	Luminaire Quantity	Watts per Luminaire	Design Watts (H x I)	Allowed Watts Minimum of D or J
Hardscape Ornamental Lighting										
Enter total into OLTG-1C; Part 4 of 4; Row C: Specific Application Wattage Allowance for Ornamental Lighting										

DRAFT

OUTDOOR LIGHTING WORKSHEET

(Part 3 of 4) **OLTG-2C**

PROJECT NAME	DATE

D. SPECIFIC APPLICATION LIGHTING WATTAGE ALLOWANCE PER APPLICATION

DETERMINE WATTAGE ALLOWANCE				DESIGN WATTS						ALLOWANCE
A	**B**	**C**	**D**	**E**	**F**	**G**	**H**	**I**	**J**	**K**
Specific Lighting Application	Number of Instances	Specific Application Allowance (watts)	Wattage Allowance (B x C)	Luminaire Symbol	Luminaire Type	Cutoff Designation	Luminaire Quantity	Watts per Luminaire	Design Watts (H x I)	Allowed Watts Minimum of D or J
Enter total into OLTG-1C; Part 4 of 4; Row D; Specific Application Wattage Allowance Per Application										

E. SPECIFIC APPLICATION LIGHTING WATTAGE ALLOWANCE PER AREA

DETERMINE WATTAGE ALLOWANCE				LUMINAIRE TYPE			DESIGN WATTS			
A	**B**	**C**	**D**	**E**	**F**	**G**	**H**	**I**	**J**	**K**
Specific Lighting Application	Illuminated Area of Application	Specific Application Allowance (watts per ft ^{2})	Wattage Allowance (B x C)	Code for Luminaire Type	Luminaire Type	Cutoff Designation	Luminaire Quantity	Watts per Luminaire	Design Watts (H x I)	Allowed Watts Minimum of D or J
Enter total into OLTG-1C; Part 4 of 4; Row E; Specific Application Lighting Wattage Allowance Per Area										

DRAFT

F. ADDITIONAL LIGHTING POWER ALLOWANCE FOR ORDINANCE REQUIREMENTS

Note: The additional lighting power allowance for ordinance requirements may be used only if the jurisdiction having authority has officially adopted specific outdoor light levels, which are expressed as average or minimum footcandle levels, by following a public process that allowed for formal public notification, review, and comment about the proposed change.

☐ Information in OLTG-1C; Part 3 of 5; Section B has been completed.

A	B	C	D	E	F
Hardscape Application Having Official Lighting Ordinance	Illuminated Hardscape Area (Ft^2)	Avg. or Min. Ordinance	Number Horizontal fc required by Ordinance	Allowance (W/ft^2)	Wattage Allowance (B x C)

1.	Total additional lighting power allowance for ordinance requirements (sum of column F)	
2.	Enter actual additional incremental wattage used to meet local ordinance requirements	
3.	Enter smaller of row 1 or row 2	

Enter wattage in row 3 into OLTG-1C; Part 4 of 4; Row F; Item: Additional lighting power allowance for ordinance requirements

DRAFT

2008 Sign Lighting Compliance Forms

Certificate of Compliance (Sign Lighting) (Part 1 of 2) SLTG-1C

Project Name	Phase of Construction ☐ New Construction ☐ Addition ☐ Alteration Function Type ☐ Outdoor Signs ☐ Indoor Signs	Date
Project Address	Compliance Method Used ☐ Maximum Allowed Lighting Power ☐ Alternate Lighting Sources	

Mandatory Sign Lighting Controls

		Yes	No
1	**§133(a)1.** All signs with permanently connected lighting are controlled with an automatic time switch control that complies with the applicable requirements of §119	☐	☐
2	**§133(a)2.** All outdoor signs are controlled with a photo control or outdoor astronomical time switch control.	☐	☐
	Exception to §133(a)2. Outdoor signs are in tunnels or large covered areas that require illumination during daylight hours.	☐	☐
3	**§133(a)3.** All outdoor signs are controlled with a dimmer that provides the ability to automatically reduce sign power by a minimum of 65 percent during nighttime hours.	☐	☐
	Exception 1 to §133(a)3. Signs are illuminated for less than one hour per day during daylight hours.	☐	☐
	Exception 2 to §133(a)3. Outdoor signs are in tunnels or large covered areas that require illumination during daylight hours.	☐	☐
	Exception 3 to §133(a)3. Only metal halide, high pressure sodium, cold cathode, or neon lamps are used to illuminated signs or parts of signs.	☐	☐
4	**§133(a)4.** An Electronic Message Center (EMC) having a new connected lighting power load greater than 15 kW has a control installed is capable of reducing the lighting power by a minimum of 30 percent when receiving a demand response signal that is sent out by the local utility.	Y ☐	N ☐ N/A ☐
	Exception to §133(a)4: The EMC is required by a health or life safety statue, ordinance, or regulation, including but not limited to exit signs and traffic signs.	Y ☐	N ☐ N/A ☐

DECLARATION STATEMENT

- I certify under penalty of perjury, under the laws of the State of California, the information provided on this form is true and correct.
- I am the person who performed the acceptance requirements verification reported on this Certificate of Acceptance, and I am eligible under Division 3 of the Business and Professions Code to accept responsibility for construction, or an authorized representative of the person responsible for construction (responsible person).
- I certify that the construction/installation identified on this form complies with the acceptance requirements indicated in the plans and specifications approved by the enforcement agency, and conforms to the applicable acceptance requirements and procedures specified in Reference Nonresidential Appendix NA7.
- I have confirmed that the Installation Certificate(s) for the construction/installation identified on this form has been completed and is posted or made available with the building permit(s) issued for the building.
- I will ensure that a completed, signed copy of this Certificate of Acceptance shall be posted, or made available with the building permit(s) issued for the building, and made available to the enforcement agency for all applicable inspections. I understand that a signed copy of this Certificate of Acceptance is required to be included with the documentation the builder provides to the building owner at occupancy.

Company Name:		
Responsible Person's Name:		Responsible Person's Signature:
Lic.#	Date Signed:	Position With Company:

Certificate of Compliance (Sign Lighting)

(Part 2 of 2) **SLTG-1C**

Project Name	Phase of Construction ☐ **New Construction** ☐ **Addition** ☐ **Alteration** Function Type ☐ **Outdoor Signs** ☐ **Indoor Signs**	Total Sign Area 25 ft^2	Date
Project Address			

Compliance Method

		Maximum Allowed Lighting Power						Alternative Light Source
A	B	C	D	E	F	G	H	I
		Allowed Watts				Design Watts *	Complies? Y/N	
Sign symbol or code	Description or location and plan location	Sign Area (ft^2)	Internally (I) or Externally (E) Illuminated	Allowed LPD (I = 12 W/ft2) (E = 2.3 W/ft2)	Allowed Watts = C x E	Total Installed watts for sign	complies If F ≤ G	List all numbers that apply, taken from the list of compliant technologies shown below.
	Total sign area:		Also enter total sign area above					

NOTE: * Design watts = total connected lighting load installed in the sign, including power used by lamps, ballasts, transformers, power supplies, etc.

The sign(s) identified above use only one or more of the following technologies: (list all numbers that apply in column I above)

1	High pressure sodium lamps
2	Pulse start or ceramic metal halide lamps served by a ballast with ≥88% efficiency
3	Pulse start metal halide lamps that are ≤ 320 watts, are not 250 watt or 175 watt lamps, and are served by a ballast with ≥80% efficiency
4	Neon or cold cathode lamps with transformer or power supply efficiency ≥ 75% with rated output current < 50 mA
5	Neon or cold cathode lamps with transformer or power supply efficiency ≥ with rated output current ≥ 50 mA
6	Fluorescent lamps with a minimum color rendering index (CRI) of 80
7	Light emitting diodes (LEDs) with a power supply with ≥ 80% efficiency
8	Single voltage LED external power supplies designed to convert 120 volt AC input into lower voltage DC or AC output, having a nameplate output power less than or equal to 250 watts, and certified to the Energy Commission as complying with the applicable requirements of the Appliance Efficiency Regulations (Title 20)
9	Compact fluorescent lamps that do not contain a medium screw base sockets (E24/E26)
10	Electronic ballasts with a fundamental output frequency ≥ 20 kHz

INSTALLATION CERTIFICATE (Part 1 of 2) ENV- INST

PROJECT NAME:	DATE:	_____ Building Permit
PROJECT ADDRESS:		_____ Checked by/Date Enforcement Agency Use

GENERAL INFORMATION

DATE OF BUILDING PERMIT	PERMIT #			
BUILDING TYPE	☐ Nonresidential	☐ High-Rise Residential	☐ Hotel/Motel Guest Room	
PHASE OF CONSTRUCTION	☐New Construction	☐ Addition	☐ Alteration	☐Unconditioned

If more than one person has responsibility for building construction, each person shall prepare and sign an Installation Certificate document applicable to the portion of construction for which they are responsible; alternatively, the person with chief responsibility for construction shall prepare and sign the Installation Certificate document(s) for the entire construction.

DECLARATION STATEMENT

- I certify under penalty of perjury, under the laws of the State of California, the information provided on this form is true and correct.
- I am eligible under Division 3 of the Business and Professions Code to accept responsibility for construction, or an authorized representative of the person responsible for construction (responsible person).
- I certify that the installed features, materials, components, or manufactured devices identified on this certificate (the installation) conforms to all applicable codes and regulations, and the installation is consistent with the plans and specifications approved by the enforcement agency.
- I reviewed a copy of the Certificate of Compliance approved by the enforcement agency that identifies the specific requirements for the installation. I certify that the requirements detailed on the Certificate of Compliance that apply to the installation have been met.
- I will ensure that a completed, signed copy of this Installation Certificate shall be posted, or made available with the building permit(s) issued for the building, and made available to the enforcement agency for all applicable inspections. I understand that a signed copy of this Installation Certificate is required to be included with the documentation the builder provides to the building owner at occupancy.

Company Name:		
Responsible Person's Name:		Responsible Person's Signature:
Lic.#	Date Signed:	Position With Company:

SCOPE OF RESPONSIBILITY

Enter the date of approval by enforcement agency of the Certificate of Compliance that provides the specifications for the energy efficiency measures for the scope of responsibility for this Installation Certificate:	Date:

In the table below identify all applicable construction documents that specify the requirements for the scope of responsibility for this Installation Certificate.

Document Title or Description	Applicable Sheets or Pages, Tables, Schedules, etc.	Date Approved By the Enforcement Agency

In the table below identify all applicable construction documents that specify the requirements for the scope of responsibility reported by this Installation Certificate (continued).

Document Title or Description	Applicable Sheets or Pages, Tables, Schedules, etc.	Date Approved By the Enforcement Agency

INSTALLATION CERTIFICATE (Part 1 of 2) MECH-INST

PROJECT NAME:	DATE:	_____ Building Permit
PROJECT ADDRESS:		_____ Checked by/Date Enforcement Agency Use

GENERAL INFORMATION

DATE OF BUILDING PERMIT	PERMIT #			
BUILDING TYPE	☐ Nonresidential	☐ High-Rise Residential	☐ Hotel/Motel Guest Room	
PHASE OF CONSTRUCTION	☐ New Construction	☐ Addition	☐ Alteration	☐ Unconditioned

If more than one person has responsibility for building construction, each person shall prepare and sign an Installation Certificate document applicable to the portion of construction for which they are responsible; alternatively, the person with chief responsibility for construction shall prepare and sign the Installation Certificate document(s) for the entire construction.

DECLARATION STATEMENT

- I certify under penalty of perjury, under the laws of the State of California, the information provided on this form is true and correct.
- I am eligible under Division 3 of the Business and Professions Code to accept responsibility for construction, or an authorized representative of the person responsible for construction (responsible person).
- I certify that the installed features, materials, components, or manufactured devices identified on this certificate (the installation) conforms to all applicable codes and regulations, and the installation is consistent with the plans and specifications approved by the enforcement agency.
- I reviewed a copy of the Certificate of Compliance approved by the enforcement agency that identifies the specific requirements for the installation. I certify that the requirements detailed on the Certificate of Compliance that apply to the installation have been met.
- I will ensure that a completed, signed copy of this Installation Certificate shall be posted, or made available with the building permit(s) issued for the building, and made available to the enforcement agency for all applicable inspections. I understand that a signed copy of this Installation Certificate is required to be included with the documentation the builder provides to the building owner at occupancy.

Company Name:		
Responsible Person's Name:		Responsible Person's Signature:
Lic.#	Date Signed:	Position With Company:

SCOPE OF RESPONSIBILITY

Enter the date of approval by enforcement agency of the Certificate of Compliance that provides the specifications for the energy efficiency measures for the scope of responsibility for this Installation Certificate:	Date:

In the table below identify all applicable construction documents that specify the requirements for the scope of responsibility for this Installation Certificate.

Document Title or Description	Applicable Sheets or Pages, Tables, Schedules, etc.	Date Approved By the Enforcement Agency

In the table below identify all applicable construction documents that specify the requirements for the scope of responsibility reported by this Installation Certificate (continued).

Document Title or Description	Applicable Sheets or Pages, Tables, Schedules, etc.	Date Approved By the Enforcement Agency

INSTALLATION CERTIFICATE (Part 1 of 2) LTG - INST

PROJECT NAME:	DATE:	_____ Building Permit
PROJECT ADDRESS:		_____ Checked by/Date Enforcement Agency Use

GENERAL INFORMATION

DATE OF BUILDING PERMIT	PERMIT #			
BUILDING TYPE	☐ Nonresidential	☐ High-Rise Residential	☐ Hotel/Motel Guest Room	
PHASE OF CONSTRUCTION	☐ New Construction	☐ Addition	☐ Alteration	☐ Unconditioned

If more than one person has responsibility for building construction, each person shall prepare and sign an Installation Certificate document applicable to the portion of construction for which they are responsible; alternatively, the person with chief responsibility for construction shall prepare and sign the Installation Certificate document(s) for the entire construction.

DECLARATION STATEMENT

- I certify under penalty of perjury, under the laws of the State of California, the information provided on this form is true and correct.
- I am eligible under Division 3 of the Business and Professions Code to accept responsibility for construction, or an authorized representative of the person responsible for construction (responsible person).
- I certify that the installed features, materials, components, or manufactured devices identified on this certificate (the installation) conforms to all applicable codes and regulations, and the installation is consistent with the plans and specifications approved by the enforcement agency.
- I reviewed a copy of the Certificate of Compliance approved by the enforcement agency that identifies the specific requirements for the installation. I certify that the requirements detailed on the Certificate of Compliance that apply to the installation have been met.
- I will ensure that a completed, signed copy of this Installation Certificate shall be posted, or made available with the building permit(s) issued for the building, and made available to the enforcement agency for all applicable inspections. I understand that a signed copy of this Installation Certificate is required to be included with the documentation the builder provides to the building owner at occupancy.

Company Name:		
Responsible Person's Name:		Responsible Person's Signature:
Lic.#	Date Signed:	Position With Company:

SCOPE OF RESPONSIBILITY

Enter the date of approval by enforcement agency of the Certificate of Compliance that provides the specifications for the energy efficiency measures for the scope of responsibility for this Installation Certificate:	Date:

In the table below identify all applicable construction documents that specify the requirements for the scope of responsibility for this Installation Certificate.

Document Title or Description	Applicable Sheets or Pages, Tables, Schedules, etc.	Date Approved By the Enforcement Agency

In the table below identify all applicable construction documents that specify the requirements for the scope of responsibility reported by this Installation Certificate (continued).

Document Title or Description	Applicable Sheets or Pages, Tables, Schedules, etc.	Date Approved By the Enforcement Agency

INSTALLATION CERTIFICATE (Part 1 of 2) OLTG-INST

PROJECT NAME:	DATE:	_____ Building Permit
PROJECT ADDRESS:		_____ Checked by/Date Enforcement Agency Use

GENERAL INFORMATION

DATE OF BUILDING PERMIT	PERMIT #			
BUILDING TYPE	☐ Nonresidential	☐ High-Rise Residential	☐ Hotel/Motel Guest Room	
PHASE OF CONSTRUCTION	☐New Construction	☐ Addition	☐ Alteration	☐Unconditioned

If more than one person has responsibility for building construction, each person shall prepare and sign an Installation Certificate document applicable to the portion of construction for which they are responsible; alternatively, the person with chief responsibility for construction shall prepare and sign the Installation Certificate document(s) for the entire construction.

DECLARATION STATEMENT

- I certify under penalty of perjury, under the laws of the State of California, the information provided on this form is true and correct.
- I am eligible under Division 3 of the Business and Professions Code to accept responsibility for construction, or an authorized representative of the person responsible for construction (responsible person).
- I certify that the installed features, materials, components, or manufactured devices identified on this certificate (the installation) conforms to all applicable codes and regulations, and the installation is consistent with the plans and specifications approved by the enforcement agency.
- I reviewed a copy of the Certificate of Compliance approved by the enforcement agency that identifies the specific requirements for the installation. I certify that the requirements detailed on the Certificate of Compliance that apply to the installation have been met.
- I will ensure that a completed, signed copy of this Installation Certificate shall be posted, or made available with the building permit(s) issued for the building, and made available to the enforcement agency for all applicable inspections. I understand that a signed copy of this Installation Certificate is required to be included with the documentation the builder provides to the building owner at occupancy.

Company Name:		
Responsible Person's Name:		Responsible Person's Signature:
Lic.#	Date Signed:	Position With Company:

SCOPE OF RESPONSIBILITY

Enter the date of approval by enforcement agency of the Certificate of Compliance that provides the specifications for the energy efficiency measures for the scope of responsibility for this Installation Certificate:	Date:

In the table below identify all applicable construction documents that specify the requirements for the scope of responsibility for this Installation Certificate.

Document Title or Description	Applicable Sheets or Pages, Tables, Schedules, etc.	Date Approved By the Enforcement Agency

INSTALLATION CERTIFICATE (Part 2 of 2) OLTG-INST

In the table below identify all applicable construction documents that specify the requirements for the scope of responsibility reported by this Installation Certificate (continued).

Document Title or Description	Applicable Sheets or Pages, Tables, Schedules, etc.	Date Approved By the Enforcement Agency

2008 Acceptance Forms

2008 Certificate of Acceptance

 ENV-2A

Fenestration Acceptance Certificate

PROJECT NAME	DATE:	TELEPHONE:
PROJECT ADDRESS		Checked by/Date Enforcement Agency Use

BUILDING INFORMATION

DATE OF PERMIT:	BUILDING PERMIT #		CONDITIONED FLOOR AREA:	CLIMATE ZONE:
BUILDING TYPE:	☐ NONRESIDENTIAL/COMMERCIAL/SCHOOL		☐ HIGH RISE RESIDENTIAL	☐ HOTEL/MOTEL GUEST ROOM
PHASE OF CONSTRUCTION:	☐ NEW CONSTRUCTION	☐ ADDITION	☐ ALTERATION	
LABEL CERTIFICATE:	☐ NFRC LABEL CERTIFICATE ID # (*Fill out Rows 1-5*)	☐ FC-1 $< 10{,}000$ ft^2 (*Skip Row 2*)	☐ FC-1 $\geq 10{,}000$ ft^2 (*Skip Row 2*)	

STATEMENT OF ACCEPTANCE

This Certificate of Acceptance summarizes the results of the acceptance test related to building fenestration requirements per Title 24, Part 6. Verify each fenestration product meet Sections 10-103(a)3B, 10-111, and 116(a)5 of the Standards., The Reference Nonresidential Appendix, NA7.4, provides additional information.

DECLARATION STATEMENT

- I certify under penalty of perjury, under the laws of the State of California, the information provided on this form is true and correct.
- I am the person who performed the acceptance requirements verification reported on this Certificate of Acceptance, and I am eligible under Division 3 of the Business and Professions Code to accept responsibility for construction, or an authorized representative of the person responsible for construction (responsible person).
- I certify that this construction/installation complies with the acceptance requirements indicated in the plans and specifications approved by the enforcement agency, and conforms to the applicable acceptance requirements and procedures specified in Reference Nonresidential Appendix NA7.
- I have confirmed that the Installation Certificate(s) for this construction/installation have been completed and are posted or made available with the building permit(s) issued for the building.
- I will ensure that a completed, signed copy of this Certificate of Acceptance shall be posted, or made available with the building permit(s) issued for the building, and made available to the enforcement agency for all applicable inspections. I understand that a signed copy of this Certificate of Acceptance is required to be included with the documentation the builder provides to the building owner at occupancy.

Company Name:		
Responsible Person's Name:		Responsible Person's Signature:
Lic.#	Date Signed:	Position With Company:

Fenestration Acceptance Certificate

PROJECT NAME	DATE:	TELEPHONE:

SUMMARY OF FENESTRATION VERIFICATION AND INSPECTION BY RESPONSIBLE PARTY

The responsible party shall verify the thermal performance (U-factor and SHGC) of each specified fenestration product being installed. The responsible party ensures that each product matches the fenestration label certificate, energy compliance documentation and building plans. Additional forms pages may be required.

		1	2	3	4
	Fenestration Product Model #				
1	Manufactured Product Code (i.e., Bluegreen/ air/clear_6mm)				
2	NFRC's Certified Product Directory (CPD) ID # (Include dashes)				
3	Frame and Sash Type				
4	Glazing Layers	☐ Single ☐ Double ☐ Other	☐ Single ☐ Double ☐ Other	☐ Single ☐ Double ☐ Other	☐ Single ☐ Double ☐ Other
5	PROOF (Verify each product with…)	☐ Delivery Receipt(s), Purchase Order or Detailed Receipt	☐ Delivery Receipt(s), Purchase Order or Detailed Receipt	☐ Delivery Receipt(s), Purchase Order or Detailed Receipt	☐ Delivery Receipt(s), Purchase Order or Detailed Receipt
		☐ Cross Reference and Matches Building Plans	☐ Cross Reference and Matches Building Plans	☐ Cross Reference and Matches Building Plans	☐ Cross Reference and Matches Building Plans

Enforcement Agency Verification: http://cpd.nfrc.org/pubsearch/psMain.asp

2008 CERTIFICATE OF ACCEPTANCE (Part 1 of 2) MECH-2A

NA7.5.1 Outdoor Air Acceptance

PROJECT NAME		DATE
PROJECT ADDRESS		
TESTING AUTHORITY	TELEPHONE	
VENTILATION SYSTEM NAME / DESIGNATION		Checked by/Date Enforcement Agency Use

DECLARATION STATEMENT

- I certify under penalty of perjury, under the laws of the State of California, the information provided on this form is true and correct.
- I am the person who performed the acceptance requirements verification reported on this Certificate of Acceptance, and I am eligible under Division 3 of the Business and Professions Code to accept responsibility for construction, or an authorized representative of the person responsible for construction (responsible person).
- I certify that this construction/installation complies with the acceptance requirements indicated in the plans and specifications approved by the enforcement agency, and conforms to the applicable acceptance requirements and procedures specified in Reference Nonresidential Appendix NA7.
- I have confirmed that the Installation Certificate(s) for this construction/installation have been completed and are posted or made available with the building permit(s) issued for the building.
- I will ensure that a completed, signed copy of this Certificate of Acceptance shall be posted, or made available with the building permit(s) issued for the building, and made available to the enforcement agency for all applicable inspections. I understand that a signed copy of this Certificate of Acceptance is required to be included with the documentation the builder provides to the building owner at occupancy.

Company Name:		
Responsible Person's Name:		Responsible Person's Signature:
Lic.#	Date Signed:	Position With Company:

Intent: *Verify measured outside airflow reading is within ± 10% of the total required outside airflow value found in the Standards Mechanical Plan (MECH-3C, Column H or Column I), per NA7.5.1.*

Construction Inspection

1 Instrumentation to perform test includes, but not limited to:
   a. Watch
   b. Calibrated means to measure airflow

2 Check one of the following:
   ☐ Variable Air Volume (VAV) - Check as appropriate:
      a. Sensor used to control outdoor air flow must have calibration certificate or be field calibrated
         ☐ Calibration certificate (attach calibration certification)
         ☐ Field calibration (attach results)
   ☐ Constant Air Volume (CAV) - Check as appropriate:
      ☐ System is designed to provide a fixed minimum OSA when the unit is on

NA7.5.1 1 Outdoor Air Acceptance

A.	Functional Testing (Check appropriate column)	CAV	VAV
a.	Verify unit is not in economizer mode during test - check appropriate column		
Step 1: CAV and VAV testing at full supply airflow			
a.	Adjust supply to achieve design airflow		
b.	Measured outdoor airflow reading (cfm)		
c.	Required outdoor airflow (cfm) *(from MECH-3C, Column I)*		
d.	Time for outside air damper to stabilize after VAV boxes open (minutes)		
e.	Return to initial conditions (check)		
Step 2: VAV testing at reduced supply airflow			
a.	Adjust supply airflow to either the sum of the minimum zone airflows or 30% of the total design airflow		
b.	Measured outdoor airflow reading (cfm)		
c.	Required outdoor airflow (cfm) *(from MECH-3C, Column I)*		
d.	Time for outside air damper to stabilize after VAV boxes open and minimum air flow achieved (minutes)		
e.	Return to initial conditions (check)		

B.	Testing Calculations & Results	CAV	VAV
Percent OSA at full supply airflow ($\%OA_{FA}$ for Step 1)			
a.	$\%OA_{FA}$ = Measured outside air reading /Required outside air (Step1b/Step1c)	%	%
b.	$90\% \leq \%OA_{FA} \leq 110\%$	Y / N	Y / N
c.	Outside air damper position stabilizes within 15 minutes (Step 1d < 15 minutes)	Y / N	Y / N
Percent OSA at reduced supply airflow ($\%OA_{RA}$ for Step 2)			
a.	$\%OA_{RA}$ = Measured outside air reading /Required outside air (Step2b/Step2c)	%	%
b.	$90\% \leq \%OA_{RA} \leq 110\%$		Y / N
c.	Outside air damper position stabilizes within 15 minutes (Step 2d < 15 minutes)		Y / N
Note: Shaded boxes do not apply for CAV systems			

C.	PASS / FAIL Evaluation (check one):
☐	PASS: All **Construction Inspection** responses are complete and **Testing Calculations & Results** responses are positive (Y - yes)
☐	FAIL: Any **Construction Inspection** responses are incomplete *OR* there is one or more negative (N - no) responses in **Testing Calculations & Results** section. Provide explanation below. Use and attach additional pages if necessary.

NA7.5.2 Constant Volume Single Zone Unitary Air Conditioner and Heat pump Systems Acceptance

PROJECT NAME		DATE
PROJECT ADDRESS		Checked by/Date Enforcement Agency Use
TESTING AUTHORITY	TELEPHONE	

DECLARATION STATEMENT

- I certify under penalty of perjury, under the laws of the State of California, the information provided on this form is true and correct.
- I am the person who performed the acceptance requirements verification reported on this Certificate of Acceptance, and I am eligible under Division 3 of the Business and Professions Code to accept responsibility for construction, or an authorized representative of the person responsible for construction (responsible person).
- I certify that this construction/installation complies with the acceptance requirements indicated in the plans and specifications approved by the enforcement agency, and conforms to the applicable acceptance requirements and procedures specified in Reference Nonresidential Appendix NA7.
- I have confirmed that the Installation Certificate(s) for this construction/installation have been completed and are posted or made available with the building permit(s) issued for the building.
- I will ensure that a completed, signed copy of this Certificate of Acceptance shall be posted, or made available with the building permit(s) issued for the building, and made available to the enforcement agency for all applicable inspections. I understand that a signed copy of this Certificate of Acceptance is required to be included with the documentation the builder provides to the building owner at occupancy.

Company Name:		
Responsible Person's Name:		Responsible Person's Signature:
Lic.#	Date Signed:	Position With Company:

Intent: *Verify the individual components of a constant volume, single-zone, unitary air conditioner and heat pump system function correctly, including: thermostat installation and programming, supply fan, heating, cooling, and damper operation per NA7.5.2*

Construction Inspection

1 Instrumentation to perform test includes, but not limited to:

a. None required

2 Installation

☐ Thermostat is located within the space-conditioning zone that is served by the HVAC system.

3 Programming (check all of the following):

☐ Thermostat meets the temperature adjustment and dead band requirements of 122(b)

☐ Occupied, unoccupied, and holiday schedules have been programmed per the facility's schedule.

☐ Pre-occupancy purge has been programmed to meet the requirements of Standards Section 121(c)2.

PROJECT NAME	DATE

NA7.5.2 Constant Volume Single Zone Unitary Air Conditioner and Heat pump Systems Acceptance

A.	Functional Testing Requirements	Operating Modes						
		Cooling load during unoccupied condition	Cooling load during occupied condition	Manual override	No-load during unoccupied condition	Heating load during unoccupied condition	No-load during occupied condition	Heating load during occupied condition
	Step 1: Check and verify the following for each simulation mode required	**A**	**B**	**C**	**D**	**E**	**F**	**G**
a.	Supply fan operates continually	☐	☐			☐	☐	
b.	Supply fan turns off				☐			
c.	Supply fan cycles on and off			☐				☐
d.	System reverts to "occupied" mode to satisfy any condition					☐		
e.	System turns off when manual override time period expires					☐		
f.	Gas-fired furnace, heat pump, or electric heater stages on	☐		☐				
g.	Neither heating or cooling is provided by the unit		☐		☐			
h.	No heating is provided by the unit		☐		☐		☐	☐
i.	No cooling is provided by the unit	☐	☐	☐	☐			
j.	Compressor stages on						☐	☐
k.	Outside air damper is open to minimum position	☐	☐			☐	☐	
l.	Outside air damper closes completely				☐			
m.	System returned to initial operating conditions after all tests have been completed:	Y / N						

B. Testing Results	A	B	C	D	E	F	G
Indicate if Passed (P), Failed (F), or N/A (X), fill in appropriate letter							

C.	PASS / FAIL Evaluation (check one):
☐	PASS: All **Construction Inspection** responses are complete and all applicable **Testing Results** responses are "Pass" (P)
☐	FAIL: Any **Construction Inspection** responses are incomplete *OR* there is one or more "Fail" (F) responses in **Testing Results** section. Provide explanation below. Use and attach additional pages if necessary.

2008 Certificate of Acceptance (Part 1 of 2) MECH-4A

Air Distribution Systems Acceptance

PROJECT NAME	DATE	TELEPHONE
PROJECT ADDRESS		Checked by/Date Enforcement Agency Use
TESTING AUTHORITY		
AIR DISTRIBUTION SYSTEM / NAME	PERMIT NUMBER	

DECLARATION STATEMENT

1. I certify under penalty of perjury, under the laws of the State of California, the information provided on this form is true and correct.
2. I am the person who performed the acceptance requirements verification reported on this Certificate of Acceptance, and I am eligible under Division 3 of the Business and Professions Code to accept responsibility for construction, or an authorized representative of the person responsible for construction (responsible person).
3. I certify that this construction/installation complies with the acceptance requirements indicated in the plans and specifications approved by the enforcement agency, and conforms to the applicable acceptance requirements and procedures specified in Reference Nonresidential Appendix NA7.
4. I have confirmed that the Installation Certificate(s) for this construction/installation have been completed and are posted or made available with the building permit(s) issued for the building.
5. I will ensure that a completed, signed copy of this Certificate of Acceptance shall be posted, or made available with the building permit(s) issued for the building, and made available to the enforcement agency for all applicable inspections. I understand that a signed copy of this Certificate of Acceptance is required to be included with the documentation the builder provides to the building owner at occupancy.

Company Name:		
Responsible Person's Name:		Responsible Person's Signature:
Lic.#	Date Signed:	Position With Company:

Intent:	*New single zone supply ductwork must be less than 6% leakage rate per §144(k) or §149(b)Di, existing single zone ductwork must be less than 15% leakage or other compliance path per §149(b)Dii or §149(b)E.*

Construction Inspection

1	Scope of test – New Buildings – this test required on New Buildings only if all checkboxes 1(a) through 1(c) are checked	
	Existing Buildings – this test required if 1(a) through 1(d) are checked	
	Ductwork conforms to the following (note if any of these are not checked, then this test is not required):	
	☐	1a) Connected to a constant volume, single zone air conditioners, heat pumps, or furnaces
	☐	1b) Serves less than 5000 square feet of floor area
	☐	1c) Has more than 25% duct surface area located in one or more of the following spaces
		- Outdoors
		- A space directly under a roof where the U-factor of the roof is greater than U-factor of the ceiling
		- A space directly under a roof with fixed vents or openings to the outside or unconditioned spaces
		- An unconditioned crawlspace
	☐	- Other unconditioned spaces 1d) A duct is extended or any of the following replaced: air handler, outdoor condensing unit of a split system, cooling or heating coil, or the furnace heat exchanger.
2	Instrumentation to perform test includes:	
	a. Duct Pressure Test	
3	Material and Installation. Complying new duct systems shall have a checked box for all of the following categories a through f.	
	a. Choice of drawbands (check one of the following)	

PROJECT NAME	DATE

Construction Inspection (Con't)

	☐	Stainless steel worm-drive hose clamps
	☐	UV-resistant nylon duct ties
☐	b. Flexible ducts are not constricted in any way	
☐	c. Duct leakage tests performed before access to ductwork and connections are blocked	
☐	d. Joints and seams are not sealed with cloth back rubber adhesive tape unless used in combination with Mastic and drawbands	
☐	e. Duct R-values are verified R-8 per 124(a)	
☐	f. Ductwork located outdoors has insulation that is protected from damage and suitable for outdoor service	

Air Distribution System Leakage Diagnostic

The installing contractor must pressure test every new HVAC systems that meet the requirements of Section 144(k) and every retrofit to existing HVAC systems that meet the requirements of section 149(b)D or E (see Scope of Test under Construction Inspection).

	RATED FAN FLOW (applies to all systems)	Measured Values	
1	Cooling capacity or for heating only units heating capacity		
	a) Cooling capacity (for all units but heating only units) in tons		
	b) Heating capacity (for heating only units) kBtu/h		
2	Fan flow calculation a) Cooling capacity in tons [_____(Line # 1a) x 400 cfm/ton] b) Heating only cap. kBtu/h [_____(Line # 1b) x (21.7 cfm/kBtu/h)]		
3	Total calculated supply fan flow 2(a) or 2(b) cfm		
	NEW CONSTRUCTION OR ENTIRE NEW DUCT SYSTEM ALTERATION:		
	Duct Pressurization Test Results (CFM @ 25 Pa)		
4	Enter Tested Leakage Flow in CFM:		✓ ✓
5	Pass if Leakage Percentage ≤6%: [_____(**Line # 4**) /_____(**Line # 3**)] x 100	%	☐ Pass ☐ Fail
	ALTERATIONS: Pre-existing Duct System with Duct Alteration and/or HVAC Equipment Change-Out		
6	Enter Tested Leakage Flow in CFM: **Pre-Test** of Existing Duct System Prior to Duct System Alteration and/or Equipment Change-Out.		
7	Enter Tested Leakage Flow in CFM: **Final Test** of New Duct System or Altered Duct System for Duct System Alteration and/or Equipment Change-Out.		
	TEST OR VERIFICATION STANDARDS: For Altered Duct System and/or HVAC Equipment Change-Out Use one of the following Three Tests or Verification Standards for compliance:		
8	Pass if Leakage Percentage <15% [_____**(Line # 7)** / _____**(Line # 3)**] x 100	%	☐ Pass ☐ Fail
9	Pass if Leakage Reduction Percentage >60% Leakage reduction = [1 - [_____**(Line#7)** / _____**(Line#6)**]} x 100	%	☐ Pass ☐ Fail
10	Pass if all Accessible Leaks are sealed as confirmed by Visual Inspection and Verification by HERS rater (sampling rate 100%)		☐ Pass ☐ Fail
	Pass if One of Lines #8 through # 10 pass		☐ Pass ☐ Fail

NA7.5.4 Air Economizer Controls Acceptance

PROJECT NAME		DATE
PROJECT ADDRESS		Checked by/Date Enforcement Agency Use
TESTING AUTHORITY	TELEPHONE	
VENTILATION SYSTEM NAME / DESIGNATION		

DECLARATION STATEMENT

- I certify under penalty of perjury, under the laws of the State of California, the information provided on this form is true and correct.
- I am the person who performed the acceptance requirements verification reported on this Certificate of Acceptance, and I am eligible under Division 3 of the Business and Professions Code to accept responsibility for construction, or an authorized representative of the person responsible for construction (responsible person).
- I certify that this construction/installation complies with the acceptance requirements indicated in the plans and specifications approved by the enforcement agency, and conforms to the applicable acceptance requirements and procedures specified in Reference Nonresidential Appendix NA7.
- I have confirmed that the Installation Certificate(s) for this construction/installation have been completed and are posted or made available with the building permit(s) issued for the building.
- I will ensure that a completed, signed copy of this Certificate of Acceptance shall be posted, or made available with the building permit(s) issued for the building, and made available to the enforcement agency for all applicable inspections. I understand that a signed copy of this Certificate of Acceptance is required to be included with the documentation the builder provides to the building owner at occupancy.

Company Name:		
Responsible Person's Name:		Responsible Person's Signature:
Lic.#	Date Signed:	Position With Company:

Intent: Verify that airside economizers function properly

Construction Inspection

1 Instrumentation to perform test includes, but not limited to:

a. Hand-held temperature probes Calibration Date: _____(must be within last year)

b. Multi-meter capable of measuring ohms and milliamps

2 Test method (check one of the following):

☐ Economizer comes from HVAC system manufacturer installed by and has been factory calibrated and tested. Attach documentation and complete certification statement. No Functional Testing required.

☐ Economizer field installed and field tested or factory installed and field tested.

3 Installation (check **all** of the following first level boxes)

☐ Economizer lockout setpoint complies with Table 144-C per Standards Section 144(e)3.

☐ Economizer lockout control sensor is located to prevent false readings.

☐ System is designed to provide up to 100% outside air without over-pressurizing the building.

☐ For systems with DDC controls lockout sensor(s) are either factory calibrated or field calibrated.

☐ For systems with non-DDC controls, manufacturer's startup and testing procedures have been applied

NA7.5.4 Air Economizer Controls Acceptance

A. Functional Testing	
Step 1: Disable demand control ventilation systems (if applicable)	
Step 2: Enable the economizer and simulate a cooling demand large enough to drive the economizer fully open (check and verify the following)	
☐ Economizer damper modulates 100% open	
☐ Return air damper modulates 100% closed.	
☐ For systems that meet the criteria of 144(e)1, verify that the economizer remains 100% open when the cooling demand can no longer be met by the economizer alone.	
☐ All applicable fans and dampers operate as intended to maintain building pressure.	
☐ The unit heating is disabled	
Step 3: Simulate a cooling load and disable the economizer (check and verify the following)	
☐ Economizer damper closes to its minimum position.	
☐ All applicable fans and dampers operate as intended to maintain building pressure.	
☐ The unit heating is disabled	
Step 4: Simulate a heating demand and enable the economizer (check and verify the following)	
☐ Economizer damper closes to its minimum position.	
Step 5: System returned to initial operating conditions	Y / N
B. Testing Results	**PASS / FAIL**
Step 1: Simulate cooling load and enable the economizer (all check boxes are complete)	
Step 2: Simulate cooling load and disable the economizer (all check boxes are complete)	
Step 3: Simulate heating demand and enable the economizer (all check boxes are complete)	

C. PASS / FAIL Evaluation (check one):
☐ PASS: All **Construction Inspection** responses are complete and all **Testing Results** responses are "Pass"
☐ FAIL: Any **Construction Inspection** responses are incomplete *OR* there is one or more "Fail" responses in **Testing Results** section. Provide explanation below. Use and attach additional pages if necessary.

NA7.5.5 Demand Control Ventilation Systems Acceptance

PROJECT NAME		DATE
PROJECT ADDRESS		Checked by/Date Enforcement Agency Use
TESTING AUTHORITY	TELEPHONE	

DECLARATION STATEMENT

- I certify under penalty of perjury, under the laws of the State of California, the information provided on this form is true and correct.
- I am the person who performed the acceptance requirements verification reported on this Certificate of Acceptance, and I am eligible under Division 3 of the Business and Professions Code to accept responsibility for construction, or an authorized representative of the person responsible for construction (responsible person).
- I certify that this construction/installation complies with the acceptance requirements indicated in the plans and specifications approved by the enforcement agency, and conforms to the applicable acceptance requirements and procedures specified in Reference Nonresidential Appendix NA7.
- I have confirmed that the Installation Certificate(s) for this construction/installation have been completed and are posted or made available with the building permit(s) issued for the building.
- I will ensure that a completed, signed copy of this Certificate of Acceptance shall be posted, or made available with the building permit(s) issued for the building, and made available to the enforcement agency for all applicable inspections. I understand that a signed copy of this Certificate of Acceptance is required to be included with the documentation the builder provides to the building owner at occupancy.

Company Name:		
Responsible Person's Name:		Responsible Person's Signature:
Lic.#	Date Signed:	Position With Company:

Intent: *Verify that systems required to employ demand Controlled ventilation (refer to §121(c)3) can vary outside ventilation flow rates based on maintaining interior carbon dioxide (CO_2) concentration setpoints*

Construction Inspection

1 Instrumentation to perform test includes, but not limited to:

a. Calibrated hand-held CO^2 analyzer

b. Manufacturer's calibration kit

c. Calibrated CO^2/air mixtures

2 Installation

☐ The sensor is located in the high density space between 3ft and 6 ft above the floor or at the anticipated level of the occupants' heads.

3 Documentation of all carbon dioxide control sensors includes (check one of the following):

a. Calibration method

☐ Factory-calibration certificate calibration cert must be attached

☐ Field calibrated

b. Sensor accuracy

☐ Certified by manufacturer to be no more than +/- 75 ppm calibration cert must be attached

PROJECT NAME	DATE

NA7.5.5 Demand Control Ventilation Systems Acceptance

A.	Functional Testing	Results
a.	Disable economizer controls	
b.	Outside air CO^2 concentration (select one of the following)	
	☐ Measured dynamically using CO^2 sensor	_____ ppm
c.	Interior CO^2 concentration setpoint (Outside CO^2 concentration + 600 ppm)	_____ ppm

Step 1: Simulate a signal at or slightly above the CO^2 setpoint or follow manufacturers recommended testing procedures.	
☐	For single zone units, outdoor air damper modulates opens to satisfy the total ventilation air called for in the Certificate of Compliance.
☐	For multiple zone units, either outdoor air damper or zone damper modulate open to satisfy the zone ventilation requirements.
Step 2: Simulate signal well below the CO^2 setpoint or follow manufacturers recommended procedures.	
☐	For single zone units, outdoor air damper modulates to the design minimum value.
☐	For multiple zone units, either outdoor air damper or zone damper modulate to satisfy the reduced zone ventilation requirements.
Step 3: System returned to initial operating conditions	Y / N

B.	Testing Results	PASS / FAIL
Step 1: Simulate a high CO^2 load (check box complete)		
Step 2: Simulate a low CO^2 load (check box complete)		

C.	PASS / FAIL Evaluation (check one):
☐	PASS: All **Construction Inspection** responses are complete and all **Testing Results** responses are "Pass"
☐	FAIL: Any **Construction Inspection** responses are incomplete *OR* there is one or more "Fail" responses in **Testing Results** section. Provide explanation below. Use and attach additional pages if necessary.

NA7.5.6 Supply Fan VFD Acceptance

PROJECT NAME		DATE
PROJECT ADDRESS		Checked by/Date Enforcement Agency Use
TESTING AUTHORITY	TELEPHONE	
VFD NAME / DESIGNATION		

DECLARATION STATEMENT

- I certify under penalty of perjury, under the laws of the State of California, the information provided on this form is true and correct.
- I am the person who performed the acceptance requirements verification reported on this Certificate of Acceptance, and I am eligible under Division 3 of the Business and Professions Code to accept responsibility for construction, or an authorized representative of the person responsible for construction (responsible person).
- I certify that this construction/installation complies with the acceptance requirements indicated in the plans and specifications approved by the enforcement agency, and conforms to the applicable acceptance requirements and procedures specified in Reference Nonresidential Appendix NA7.
- I have confirmed that the Installation Certificate(s) for this construction/installation have been completed and are posted or made available with the building permit(s) issued for the building.
- I will ensure that a completed, signed copy of this Certificate of Acceptance shall be posted, or made available with the building permit(s) issued for the building, and made available to the enforcement agency for all applicable inspections. I understand that a signed copy of this Certificate of Acceptance is required to be included with the documentation the builder provides to the building owner at occupancy.

Company Name:		
Responsible Person's Name:		Responsible Person's Signature:
Lic.#	Date Signed:	Position With Company:

Intent: *Verify that the supply fan in a variable air volume application modulates to meet system airflow demand.*

Construction Inspection

1 Instrumentation to perform test includes, but not limited to:

a. Calibrated differential pressure gauge

2 Installation

☐ Discharge static pressure sensors are either factory calibrated or field-calibrated.

☐ The static pressure location, setpoint, and reset control meets the requirements of Standards section 144(c)2C

3 Documentation of all discharge static pressure sensors including (check one of the following):

. Field-calibrated

☐ Calibration complete, all pressure sensors within 10% of calibrated reference sensor

NA7.5.6 Supply Fan VFD Acceptance

A. Functional Testing		Results
Step 1: Drive all VAV boxes to achieve design airflow		
a.	Supply fan controls modulate to increase capacity	Y / N
b.	Supply fan maintains discharge static pressure within +/-10% of the current operating set point.	Y / N
c.	Supply fan controls stabilize within a 5 minute period.	Y / N
Step 2: Drive all VAV boxes to minimum flow		
a.	Supply fan controls modulate to decrease capacity.	Y / N
b.	Current operating setpoint has decreased (for systems with DDC to the zone level).	Y / N
c.	Supply fan maintains discharge static pressure within +/-10% of the current operating setpoint.	Y / N
d.	Supply fan controls stabilize within a 5 minute period.	Y / N
Step 3: System returned to initial operating conditions		Y / N

B. Testing Results	PASS / FAIL	
Step 1: Drive all VAV boxes to achieve design airflow		
Step 2: Drive all VAV boxes to minimum flow		

C. PASS / FAIL Evaluation (check one):	
☐	PASS: All **Construction Inspection** responses are complete and all **Testing Results** responses are "Pass"
☐	FAIL: Any **Construction Inspection** responses are incomplete *OR* there is one or more "Fail" responses in **Testing Results** section. Provide explanation below. Use and attach additional pages if necessary.

NA7.5.7

PROJECT NAME		DATE
PROJECT ADDRESS		Checked by/Date Enforcement Agency Use
TESTING AUTHORITY	TELEPHONE	
VFD NAME / DESIGNATION		

DECLARATION STATEMENT

- I certify under penalty of perjury, under the laws of the State of California, the information provided on this form is true and correct.
- I am the person who performed the acceptance requirements verification reported on this Certificate of Acceptance, and I am eligible under Division 3 of the Business and Professions Code to accept responsibility for construction, or an authorized representative of the person responsible for construction (responsible person).
- I certify that this construction/installation complies with the acceptance requirements indicated in the plans and specifications approved by the enforcement agency, and conforms to the applicable acceptance requirements and procedures specified in Reference Nonresidential Appendix NA7.
- I have confirmed that the Installation Certificate(s) for this construction/installation have been completed and are posted or made available with the building permit(s) issued for the building.
- I will ensure that a completed, signed copy of this Certificate of Acceptance shall be posted, or made available with the building permit(s) issued for the building, and made available to the enforcement agency for all applicable inspections. I understand that a signed copy of this Certificate of Acceptance is required to be included with the documentation the builder provides to the building owner at occupancy.

Company Name:		
Responsible Person's Name:		Responsible Person's Signature:
Lic.#	Date Signed:	Position With Company:

Intent: *Ensure that control valves serving variable flow systems are designed to withstand the pump pressure over the full range of operation.*

Construction Inspection

1 Instrumentation to perform test includes, but not limited to:

a. Calibrated differential pressure gauge

b. Pump curve submittals showing the shut-off head

2 Installation

☐ Valve and piping arrangements were installed per the design drawings

NA7.5.7

A. Functional Testing	Pump Tag (Id) _____	Results
Step 1: Determine pump dead head pressure		
a. Close pump discharge isolation valve		Y / N
b. Measure and record the differential pump pressure	Ft. W.C. =	_____
c. Record the shut-off head from the submittal	Ft. W.C. =	_____
d. The measurement across the pump in step 1b is within 5% of the pump submittal in step 1c		Y / N
e. Open pump discharge isolation valve		Y / N
Step 2: Automatically close all valves on the systems being tested. If 3-way valves are present, close off the bypass line(s).		
a. The 2 way valves automatically close		Y / N
b. Measure and record the differential pump pressure in feet of water column	Ft. W.C. =	_____
c. The measurement across the pump in step 2b is within 5% of the measurement in step 1b		Y / N
Step 3: System returned to initial operating conditions	Y / N	

B. Testing Results	PASS / FAIL
Step 1: Pressure measurement is within 5% of submittal data for all pumps	
Step 2: Pressure measurements are within 5%	

C. PASS / FAIL Evaluation (check one):	
☐	PASS: All **Construction Inspection** responses are complete and all **Testing Results** responses are "Pass"
☐	FAIL: Any **Construction Inspection** responses are incomplete *OR* there is one or more "Fail" responses in **Testing Results** section. Provide explanation below. Use and attach additional pages if necessary.

NA7.5.8 Supply Water Temperature Reset Controls Acceptance

PROJECT NAME		DATE
PROJECT ADDRESS		
TESTING AUTHORITY	TELEPHONE	
VFD NAME / DESIGNATION		Checked by/Date Enforcement Agency Use

Intent: *Ensure that both the chilled water and hot water supply temperatures are automatically reset based on either building loads or outdoor air temperature, as indicated in the control sequences.*

Construction Inspection

1 Instrumentation to perform test includes, but is not limited to:

a. Calibrated reference temperature sensor or drywell bath

2 Installation

☐ Supply water temperature sensors have been either factory or field calibrated.

3 Documentation of all discharge static pressure sensors including (check one of the following):

Field-calibrated

☐ Calibration complete, all pressure sensors within 1% of calibrated reference sensor or drywell bath

DECLARATION STATEMENT

- I certify under penalty of perjury, under the laws of the State of California, the information provided on this form is true and correct.
- I am the person who performed the acceptance requirements verification reported on this Certificate of Acceptance, and I am eligible under Division 3 of the Business and Professions Code to accept responsibility for construction, or an authorized representative of the person responsible for construction (responsible person).
- I certify that this construction/installation complies with the acceptance requirements indicated in the plans and specifications approved by the enforcement agency, and conforms to the applicable acceptance requirements and procedures specified in Reference Nonresidential Appendix NA7.
- I have confirmed that the Installation Certificate(s) for this construction/installation have been completed and are posted or made available with the building permit(s) issued for the building.
- I will ensure that a completed, signed copy of this Certificate of Acceptance shall be posted, or made available with the building permit(s) issued for the building, and made available to the enforcement agency for all applicable inspections. I understand that a signed copy of this Certificate of Acceptance is required to be included with the documentation the builder provides to the building owner at occupancy.

Company Name:		
Responsible Person's Name:		Responsible Person's Signature:
Lic.#	Date Signed:	Position With Company:

NA7.5.8 Supply Water Temperature Reset

A	Functional Testing	Results
Step 1: Test Maximum Reset Value		
a.	Change reset control variable to it's maximum value	Y / N
b.	Verify that chilled or hot water temperature setpoint is reset to appropriate value	Y / N
c.	Verify that actual system temperature changes to within 2% of the new setpoint	Y / N
Step 2: Test Minimum Reset Value		
a.	Change reset control variable to it's minimum value	Y / N
b.	Verify that chilled or hot water temperature setpoint is reset to appropriate value	Y / N
c.	Verify that actual system temperature changes to within 2% of the new setpoint	Y / N
Step 3: Test Maximum Reset Value		
a.	Restore reset control variable to automatic control	Y / N
b.	Verify that chilled or hot water temperature setpoint is reset to appropriate value	Y / N
c.	Verify that actual supply temperature changes to meet setpoint	Y / N
d.	Verify that actual supply temperature changes to within 2% of the new setpoint	Y / N

B	Testing Results	PASS / FAIL
System passes criteria in 1c, 2c and 3d		

C	PASS / FAIL Evaluation (check one):
☐	PASS: All **Construction Inspection** responses are complete and all **Testing Results** responses are "Pass"
☐	FAIL: Any **Construction Inspection** responses are incomplete *OR* there is one or more "Fail" responses in **Testing Results** section. Provide explanation below. Use and attach additional pages if necessary

NA7.5.9 Hydronic System Variable Flow Control Acceptance

PROJECT NAME		DATE
PROJECT ADDRESS		Checked by/Date Enforcement Agency Use
TESTING AUTHORITY	TELEPHONE	
VFD NAME / DESIGNATION		

Intent: *Ensure that when loads within the building fluctuate, control valves modulate the amount of water passing through each coil and add or remove the desired amount of energy from the air stream to satisfy the load.*

Construction Inspection

1 Instrumentation to perform test includes, but not limited to:
   a. Calibrated differential pressure gauge
2 Installation
   ☐ Pressure sensors are either factory calibrated or field-calibrated.
   ☐ Pressure sensor location, setpoint, and reset control meets the requirements of Standards section 144(j)6B
3 Documentation of all control pressure sensors including (check one of the following):
   a. Factory-calibrated (proof required)
      ☐ Factory-calibration certificate
   b. Field-calibrated
      ☐ Calibration complete, all pressure sensors within 10% of calibrated reference sensor

DECLARATION STATEMENT

- I certify under penalty of perjury, under the laws of the State of California, the information provided on this form is true and correct.
- I am the person who performed the acceptance requirements verification reported on this Certificate of Acceptance, and I am eligible under Division 3 of the Business and Professions Code to accept responsibility for construction, or an authorized representative of the person responsible for construction (responsible person).
- I certify that this construction/installation complies with the acceptance requirements indicated in the plans and specifications approved by the enforcement agency, and conforms to the applicable acceptance requirements and procedures specified in Reference Nonresidential Appendix NA7.
- I have confirmed that the Installation Certificate(s) for this construction/installation have been completed and are posted or made available with the building permit(s) issued for the building.
- I will ensure that a completed, signed copy of this Certificate of Acceptance shall be posted, or made available with the building permit(s) issued for the building, and made available to the enforcement agency for all applicable inspections. I understand that a signed copy of this Certificate of Acceptance is required to be included with the documentation the builder provides to the building owner at occupancy.

Company Name:		
Responsible Person's Name:		Responsible Person's Signature:
Lic.#	Date Signed:	Position With Company:

NA7.5.9 Hydronic System Variable Flow Control

A. Functional Testing		Results
Step 1: Design flow test		
a. Open control valves to achieve a minimum of 90% of design flow		Y / N
b. Verify that the pump speed increases		Y / N
c. Are the pumps operating at 100% speed?		Y / N
d. Record the system pressure as measured at the control sensor	Ft. W.C. =	_____
e. Record the system pressure setpoint	Ft. W.C. =	_____
f. Is the pressure reading 1d within 5% of pressure setpoint 1e?		Y / N
g. Did the system operation stabilize within 5 minutes after completion of step 1a?		Y / N
Step 2: Low flow test		
a. Close coil control valves to achieve a maximum of 50% of design flow		Y / N
b. Verify that the current operating speed decreases (for systems with DDC to the zone level)		Y / N
c. Verify that the current operating speed has not increased (for all other systems that are not DDC)		Y / N
d. Record the system pressure as measured at the control sensor	Ft. W.C. =	_____
e. Record the system pressure setpoint	Ft. W.C. =	_____
f. Is the setpoint in 2e is less than the setpoint in 1d		Y / N
g. Is the pressure reading 2d within 5% of pressure setpoint 2e?		Y / N
h. Did the system operation stabilize within 5 minutes after completion of step 2a?		Y / N
Step 3: System returned to initial operating conditions		Y / N

B. Testing Results	PASS / FAIL
Step 1: Select pass if either 1c or 1f are true	
Step 2: Select pass if 2b, 2e, 2f and 2g are true	

C. PASS / FAIL Evaluation (check one):	
☐	PASS: All **Construction Inspection** responses are complete and all **Testing Results** responses are "Pass"
☐	FAIL: Any **Construction Inspection** responses are incomplete *OR* there is one or more "Fail" responses in **Testing Results** section. Provide explanation below. Use and attach additional pages if necessary.

NA7.5.10 Automatic Demand Shed Control Acceptance

PROJECT NAME		DATE
PROJECT ADDRESS		
TESTING AUTHORITY	TELEPHONE	
VFD NAME / DESIGNATION		Checked by/Date Enforcement Agency Use

Intent: *Ensure that the central demand shed sequences have been properly programmed into the DDC system*

Construction Inspection

1 Instrumentation to perform test includes, but not limited to:

a. None

2 Installation

☐ The EMCS front end interface enables activation of the central demand shed controls

DECLARATION STATEMENT

- I certify under penalty of perjury, under the laws of the State of California, the information provided on this form is true and correct.
- I am the person who performed the acceptance requirements verification reported on this Certificate of Acceptance, and I am eligible under Division 3 of the Business and Professions Code to accept responsibility for construction, or an authorized representative of the person responsible for construction (responsible person).
- I certify that this construction/installation complies with the acceptance requirements indicated in the plans and specifications approved by the enforcement agency, and conforms to the applicable acceptance requirements and procedures specified in Reference Nonresidential Appendix NA7.
- I have confirmed that the Installation Certificate(s) for this construction/installation have been completed and are posted or made available with the building permit(s) issued for the building.
- I will ensure that a completed, signed copy of this Certificate of Acceptance shall be posted, or made available with the building permit(s) issued for the building, and made available to the enforcement agency for all applicable inspections. I understand that a signed copy of this Certificate of Acceptance is required to be included with the documentation the builder provides to the building owner at occupancy.

Company Name:		
Responsible Person's Name:		Responsible Person's Signature:
Lic.#	Date Signed:	Position With Company:

NA7.5.10 Automatic Demand Shed Control Acceptance

A	Functional Testing	Pump Tag (Id) _____
Step 1: Engage the demand shed controls		
a.	Engage the central demand shed control signal	Y / N
b.	Verify that the current operating temperature setpoint in a sample of non-critical spaces increases by the proper amount.	Y / N
c.	Verify that the current operating temperature setpoint in a sample of critical spaces does not change.	Y / N
Step 2: Disengage the demand shed controls		
a.	Disengage the central demand shed control signal	Y / N
b.	Verify that the current operating temperature setpoint in the sample of non-critical spaces returns to their original value.	Y / N
c.	Verify that the current operating temperature setpoint in the sample of critical spaces does not change.	Y / N
Step 3: System returned to initial operating conditions		Y / N

B	Testing Results	PASS / FAIL
Test passes if all answers are yes in Step 1 and Step 2		

C	PASS / FAIL Evaluation (check one):
☐	PASS: All **Construction Inspection** responses are complete and all **Testing Results** responses are "Pass"
☐	FAIL: Any **Construction Inspection** responses are incomplete *OR* there is one or more "Fail" responses in **Testing Results** section. Provide explanation below. Use and attach additional pages if necessary.

NA7.5.11 Fault Detection and Diagnostics (FDD) for Packaged Direct-Expansion Units

PROJECT NAME		DATE
PROJECT ADDRESS		Checked by/Date Enforcement Agency Use
TESTING AUTHORITY	TELEPHONE	

Intent:

Construction Inspection

1 Instrumentation to perform test includes, but not limited to:

a List of instrumentation may be needed or included.

2 Installation

☐ Verify that FDD hardware is installed on equipment by the manufacturer and that equipment make and model include factory-installed FDD hardware that matches the information indicated on copies of the manufacturer's cut sheets and on the plans and specifications.

DECLARATION STATEMENT

- I certify under penalty of perjury, under the laws of the State of California, the information provided on this form is true and correct.
- I am the person who performed the acceptance requirements verification reported on this Certificate of Acceptance, and I am eligible under Division 3 of the Business and Professions Code to accept responsibility for construction, or an authorized representative of the person responsible for construction (responsible person).
- I certify that the construction/installation identified on this form complies with the acceptance requirements indicated in the plans and specifications approved by the enforcement agency, and conforms to the applicable acceptance requirements and procedures specified in Reference Nonresidential Appendix NA7.
- I have confirmed that the Installation Certificate(s) for the construction/installation identified on this form has been completed and is posted or made available with the building permit(s) issued for the building.
- I will ensure that a completed, signed copy of this Certificate of Acceptance shall be posted, or made available with the building permit(s) issued for the building, and made available to the enforcement agency for all applicable inspections. I understand that a signed copy of this Certificate of Acceptance is required to be included with the documentation the builder provides to the building owner at occupancy.

Company Name:		
Responsible Person's Name:		Responsible Person's Signature:
Lic.#	Date Signed:	Position With Company:

NA7.5.11 Fault Detection and Diagnostics (FDD) for Packaged Direct-Expansion Units

A	Eligibility Criteria	Results
a.	A fault detection and diagnostics (FDD) system for direct-expansion packaged units shall contain the following features to be eligible for credit in the performance calculation method:	
b.	The unit shall include a factory-installed economizer and shall limit the economizer deadband to no more than 2°F	Y / N
c.	The unit shall include direct-drive actuators on outside air and return air dampers	Y / N
d.	The unit shall include an integrated economizer with either differential dry-bulb or differential enthalpy control	Y / N
e.	The unit shall include a low temperature lockout on the compressor to prevent coil freeze-up or comfort problems	Y / N
f.	Outside air and return air dampers shall have maximum leakage rates conforming to ASHRAE 90.1- 2004	Y / N
g.	The unit shall have an adjustable expansion control device such as a thermostatic expansion valve (TXV)	Y / N
h.	To improve the ability to troubleshoot charge and compressor operation, a high-pressure refrigerant port will be located on the liquid line. A low-pressure refrigerant port will be located on the suction line	Y / N
i.	The following sensors should be permanently installed to monitor system operation and the controller should have the capability of displaying the value of each parameter:	Y / N
	☐ Refrigerant suction pressure ☐ Supply air relative humidity ☐ Return air temp. ☐ Supply air relative humidity.	
	☐ Refrigerant suction temp. ☐ Outside air relative humidity ☐ Supply air temp.	
	☐ Liquid line pressure ☐ Return air relative humidity ☐ Outside air temp.	
j.	The controller will provide system status by indicating the following conditions:	Y / N
	☐ Compressor enabled ☐ Economizer enabled ☐ Free cooling available	
	☐ Heating enabled ☐ Mixed air low limit cycle active	
k.	The unit controller shall have the capability to manually initiate each operating mode so that the operation of compressors, economizers, fans, and heating system can be independently tested and verified	Y / N

B	Functional Testing	Results
Step 1: Low Airflow Test		
a.	Test low airflow condition by replacing the existing filter with a dirty filter or appropriate obstruction	
b.	Verify that the fault detection and diagnostics system reports the fault	Y / N
c.	Verify that the system is able to verify the correct refrigerant charge	Y / N
d.	Verify that you are able to calibrate the following:	Y / N
	☐ Outside Air Temp. Sensor ☐ Return Air Temp. Sensors ☐ Supply Air. Temp Sensors	

C	Testing Results	PASS / FAIL
Test passes if all answers are yes under **Eligibility Criteria** and **Functional Testing**.		

☐	PASS: All **Construction Inspection** responses are complete and all **Testing Results** responses are "Pass"
☐	FAIL: Any **Construction Inspection** responses are incomplete *OR* there is one or more "Fail" responses in **Testing Results** section. Provide explanation below. Use and attach additional pages if necessary.

NA7.5.12 Automatic Fault Detection and Diagnostics (FDD) for Air Handling Units and Zone Terminal Units Acceptance

PROJECT NAME		DATE
PROJECT ADDRESS		
TESTING AUTHORITY	TELEPHONE	

Checked by/Date
Enforcement Agency Use

Intent: *Verify that the system detects common faults in air handling units and terminal units.*

Construction Inspection

1 Instrumentation to perform test includes, but not limited to:

a. No instrumentation is required – changes are implemented at the building automation system control station.

2 Installation

☐ The functional testing verifies proper installation of the controls for FDD for air handling units and zone terminal units. No additional installation checks are required.

DECLARATION STATEMENT

- I certify under penalty of perjury, under the laws of the State of California, the information provided on this form is true and correct.
- I am the person who performed the acceptance requirements verification reported on this Certificate of Acceptance, and I am eligible under Division 3 of the Business and Professions Code to accept responsibility for construction, or an authorized representative of the person responsible for construction (responsible person).
- I certify that the construction/installation identified on this form complies with the acceptance requirements indicated in the plans and specifications approved by the enforcement agency, and conforms to the applicable acceptance requirements and procedures specified in Reference Nonresidential Appendix NA7.
- I have confirmed that the Installation Certificate(s) for the construction/installation identified on this form has been completed and is posted or made available with the building permit(s) issued for the building.
- I will ensure that a completed, signed copy of this Certificate of Acceptance shall be posted, or made available with the building permit(s) issued for the building, and made available to the enforcement agency for all applicable inspections. I understand that a signed copy of this Certificate of Acceptance is required to be included with the documentation the builder provides to the building owner at occupancy.

Company Name:		
Responsible Person's Name:		Responsible Person's Signature:
Lic.#	Date Signed:	Position With Company:

PROJECT NAME	DATE

NA7.5.12 Automatic Fault Detection and Diagnostics (FDD) for Air Handling Units and Zone Terminal Units Acceptance

A. Functional Testing for Air Handling Units **Testing of each AHU with FDD controls shall include the following tests:**	**Results**
Step 1: Sensor Drift/Failure	
a. Disconnect outside air temperature sensor from unit controller	Y / N
b. Verify that the FDD system reports a fault	Y / N
c. Connect OAT sensor to the unit controller	Y / N
d. Verify that FDD indicates normal system operation	Y / N
Step 2: Damper/Actuator Fault	
a. From the control system workstation, command the mixing box dampers to full open (100% outdoor air)	Y / N
b. Disconnect power to the actuator and verify that a fault is reported at the control workstation	Y / N
c. Reconnect power to the actuator and command the mixing box dampers to full open	Y / N
d. Verify that the control system does not report a fault	Y / N
e. From the control system workstation, command the mixing box dampers to a full-closed position (0% outdoor air)	Y / N
f. Disconnect power to the actuator and verify that a fault is reported at the control workstation	Y / N
g. Reconnect power to the actuator and command the dampers closed	Y / N
h. Verify that the control system does not report a fault during normal operation	Y / N
Step 3: Valve/actuator fault	
a. From the control system workstation, command the heating and cooling coil valves to full open or closed, then disconnect power to the actuator and verify that a fault is reported at the control workstation	Y / N
Step 4: Inappropriate simultaneous heating, mechanical cooling, and/or economizing	
a. From the control system workstation, override the heating coil valve and verify that a fault is reported at the control workstation	Y / N
b. From the control system workstation, override the cooling coil valve and verify that a fault is reported at the control workstation	Y / N
c. From the control system workstation, override the mixing box dampers and verify that a fault is reported at the control workstation	Y / N

B. Functional Testing for Zone Terminal Units **Testing shall be performed on one of each type of terminal unit (VAV box) in the project. A minimum of 5% of the terminal boxes shall be tested.**	**Results**
Step 1: Sensor drift/failure	
a. Disconnect the tubing to the differential pressure sensor of the VAV box	Y / N
b. Verify that control system detects and reports the fault	Y / N
c. Reconnect the sensor and verify proper sensor operation	Y / N
d. Verify that the control system does not report a fault	Y / N
Step 2: Damper/actuator fault	
If the Damper is stuck open:	
a. Command the damper to be fully open (room temperature above setpoint)	Y / N
b. Disconnect the actuator to the damper	Y / N

PROJECT NAME	DATE

NA7.5.12 Automatic Fault Detection and Diagnostics (FDD) for Air Handling Units and Zone Terminal Units

c.	Adjust the cooling setpoint so that the room temperature is below the cooling setpoint to command the damper to the minimum position. Verify that the control system reports a fault	Y / N
d.	Reconnect the actuator and restore to normal operation	Y / N
If the Damper is stuck Closed:		
a.	Set the damper to the minimum position	Y / N
b.	Disconnect the actuator to the damper	Y / N
c.	Set the cooling setpoint below the room temperature to simulate a call for cooling. Verify that the control system reports a fault	Y / N
d.	Reconnect the actuator and restore to normal operation	Y / N
Step 3: Valve/actuator fault (For systems with hydronic reheat)		
a.	Command the reheat coil valve to (full) open	Y / N
b.	Disconnect power to the actuator. Set the heating setpoint temperature to be lower than the current space temperature, to command the valve closed. Verify that the fault is reported at the control workstation	Y / N
c.	Reconnect the actuator and restore normal operation	Y / N
Step 4: Feedback loop tuning fault (unstable airflow)		
a.	Set the integral coefficient of the box controller to a value 50 times the current value. Lower the space cooling setpoint to simulate a call for cooling.	
b.	The damper cycles continuously and airflow is unstable. Verify that the control system detects and reports the fault	Y / N
c.	Reset the integral coefficient of the controller to the original value to restore normal operation	Y / N
Step 5: Disconnected inlet duct		
a.	From the control system workstation, command the damper to full closed, then disconnect power to the actuator and verify that a fault is reported at the control workstation	Y / N

C. Testing Results	**PASS / FAIL**
Test passes if all applicable answers are yes under **Functional Testing Sections**.	

D.	**PASS / FAIL Evaluation (check one):**
☐	PASS: All **Construction Inspection** responses are complete and all **Testing Results** responses are "Pass"
☐	FAIL: Any **Construction Inspection** responses are incomplete *OR* there is one or more "Fail" responses in **Testing Results** section. Provide explanation below. Use and attach additional pages if necessary.

NA7.5.13 Distributed Energy Storage DX AC Systems Acceptance

PROJECT NAME		DATE
PROJECT ADDRESS		Checked by/Date Enforcement Agency Use
TESTING AUTHORITY	TELEPHONE	

Intent: *Verify proper operation of distributed energy storage DX systems.*

Construction Inspection

1 Instrumentation to perform test includes, but not limited to:

a. No special instrumentation is required to perform these tests.

2 Installation

Prior to Performance Testing, verify and document the following:

- ☐ The water tank is filled to the proper level
- ☐ The water tank is sitting on a foundation with adequate structural strength
- ☐ The water tank is insulated and the top cover is in place
- ☐ The DES/DXAC is installed correctly (refrigerant piping, etc.)
- ☐ Verify that the correct model number is installed and configured

DECLARATION STATEMENT

- I certify under penalty of perjury, under the laws of the State of California, the information provided on this form is true and correct.
- I am the person who performed the acceptance requirements verification reported on this Certificate of Acceptance, and I am eligible under Division 3 of the Business and Professions Code to accept responsibility for construction, or an authorized representative of the person responsible for construction (responsible person).
- I certify that the construction/installation identified on this form complies with the acceptance requirements indicated in the plans and specifications approved by the enforcement agency, and conforms to the applicable acceptance requirements and procedures specified in Reference Nonresidential Appendix NA7.
- I have confirmed that the Installation Certificate(s) for the construction/installation identified on this form has been completed and is posted or made available with the building permit(s) issued for the building.
- I will ensure that a completed, signed copy of this Certificate of Acceptance shall be posted, or made available with the building permit(s) issued for the building, and made available to the enforcement agency for all applicable inspections. I understand that a signed copy of this Certificate of Acceptance is required to be included with the documentation the builder provides to the building owner at occupancy.

Company Name:		
Responsible Person's Name:		Responsible Person's Signature:
Lic.#	Date Signed:	Position With Company:

PROJECT NAME	DATE

NA7.5.13 Distributed Energy Storage DX AC Systems Acceptance

A. Functional Testing	Results
Step 1: Simulate no cooling load during a nighttime period by setting system time to between 9PM and 6AM. Raise the space temperature setpoint above the current space temperature. Verify and document the following:	
a. The system charges the tank.	Y / N
b. The system does not provide cooling to the building.	Y / N
Step 2: Simulate cooling load during daytime period (e.g. by setting time schedule to include actual time and placing thermostat cooling set-point below actual temperature). Verify and document the following:	
a. Supply fan operates continually during occupied hours.	Y / N
b. If the DES/DXAC has cooling capacity, DES/DXAC runs to meet the cooling demand (in ice melt mode)	Y / N / NA
c. If the DES/DXAC has no ice and there is a call for cooling, the DES/DXAC runs in direct cooling mode	Y / N / NA
Step 3: Simulate no cooling load during daytime condition. Verify and document the following:	
a. Supply fan operates as per the facility thermostat or control system	Y / N
b. The DES/DXAC and the condensing unit do not run	Y / N
Step 4: Simulate no cooling load during morning shoulder time period. Verify and document the following:	
a. The DES/DXAC is idle (the condensing unit and the refrigerant pumps remain off).	Y / N
Step 5: Simulate a cooling load during morning shoulder time period. Verify and document the following:	
a. The DES/DXAC runs in direct cooling mode (the compressor operates to cool the space).	Y / N

B. Calibrating Controls	Results
a. Verify that you are able to set the proper time and date, as per manufacturer's installation manual for approved installers	Y / N

C. Testing Results	PASS / FAIL
Test passes if all answers are yes under **Functional Testing** and **Calibrating Controls**.	

☐	PASS: All **Construction Inspection** responses are complete and all **Testing Results** responses are "Pass"
☐	FAIL: Any **Construction Inspection** responses are incomplete *OR* there is one or more "Fail" responses in **Testing Results** section. Provide explanation below. Use and attach additional pages if necessary.

NA7.5.14 Thermal Energy Storage (TES) System Acceptance

PROJECT NAME		DATE
PROJECT ADDRESS		
TESTING AUTHORITY	TELEPHONE	

Checked by/Date
Enforcement Agency Use

Intent: *Verify proper operation of distributed energy storage DX systems.*

Construction Inspection

1. Instrumentation to perform test includes, but not limited to:
   a No special instrumentation is required for the acceptance tests.

DECLARATION STATEMENT

- I certify under penalty of perjury, under the laws of the State of California, the information provided on this form is true and correct.
- I am the person who performed the acceptance requirements verification reported on this Certificate of Acceptance, and I am eligible under Division 3 of the Business and Professions Code to accept responsibility for construction, or an authorized representative of the person responsible for construction (responsible person).
- I certify that the construction/installation identified on this form complies with the acceptance requirements indicated in the plans and specifications approved by the enforcement agency, and conforms to the applicable acceptance requirements and procedures specified in Reference Nonresidential Appendix NA7.
- I have confirmed that the Installation Certificate(s) for the construction/installation identified on this form has been completed and is posted or made available with the building permit(s) issued for the building.
- I will ensure that a completed, signed copy of this Certificate of Acceptance shall be posted, or made available with the building permit(s) issued for the building, and made available to the enforcement agency for all applicable inspections. I understand that a signed copy of this Certificate of Acceptance is required to be included with the documentation the builder provides to the building owner at occupancy.

Company Name:		
Responsible Person's Name:		Responsible Person's Signature:
Lic.#	Date Signed:	Position With Company:

PROJECT NAME	DATE

NA7.5.14 Thermal Energy Storage (TES) System Acceptance

A. Certificate of Compliance Information

The following Certificate of Compliance information for both the chiller and the storage tank shall be provided on the plans to document the key TES System parameters and allow plan check comparison to the inputs used in the DOE-2 simulation. DOE-2 keywords are shown in ALL CAPITALS in parentheses.

a. Chiller	Brand and Model:			
	Type (Centrifugal, Reciprocating, etc):			
	Capacity (tons): (Size)			
	Starting Efficiency (kW/ton): (at beginning of ice production) (COMP-KW/TON-START)			
	Ending Efficiency (kW/ton): (at end of ice production) (COMP-KW/TON-END)			
	Capacity Reduction (% / F): (PER-COMP-REDUCT/F)			
b. Storage Tank	Storage Type (Check): (TES-TYPE)	☐ Chilled Water Storage	☐ Ice-on-Coil	☐ CHS
		☐ Ice Harvester	☐ Brine	
		☐ Ice-Slurry	☐Eutectic Salt	
	Number of tanks (SIZE)			
	Storage Capacity per Tank (ton-hours)			
	Storage Rate (tons): (COOL-STORE-RATE)			
	Discharge Rate (tons): (COOL-SUPPLY-RATE)			
	Auxiliary Power (watts): (PUMP+AUX-KW)			
	Tank Area (sq ft): (CTANK-LOSS-COEFF)			
	Tank Insulation (R-Value): (CTANK-LOSS-COEFF)			

PROJECT NAME DATE

NA7.5.14 Thermal Energy Storage (TES) Systems

B. Functional Testing	Results
Step 1: TES System Design Verification	
a. In the TES System Design Verification part, the installing contractor shall certify the following information, which verifies proper installation of the TES System consistent with system design expectations:	Y / N

☐ The TES system is one of the above eligible systems	☐ Initial discharge rate of the storage tanks (tons)	☐ Discharge test time (hrs).
☐ Initial charge rate of the storage tanks (tons)	☐ Final discharge rate of the storage tank (tons)	☐ Tank storage capacity after charge (ton-hrs)
☐ Final charge rate of the storage tank (tons)	☐ Charge test time (hrs)	☐ Tank storage capacity after discharge (ton-hrs)
☐ Tank standby storage losses (UA)	☐ Initial chiller efficiency (kW/ton) during charging	☐ Final chiller efficiency (kW/ton) during charging

Step 2: TES System Controls and Operation Verification		
a.	The TES system and the chilled water plant is controlled and monitored by an EMS.	☐ Pass ☐ Fail
b.	Force the time between 9:00 p.m. and 9:00 a.m. and simulate a partial or no charge of the tank and simulate no cooling load by setting the indoor temperature setpoint higher than the ambient temperature. Verify that the TES system starts charging (storing energy).	☐ Pass ☐ Fail
c.	Force the time to be between 6:00 p.m. and 9:00 p.m. and simulate a partial charge on the tank and simulate a cooling load by setting the indoor temperature set point lower than the ambient temperature. Verify that the TES system starts discharging.	☐ Pass ☐ Fail
d.	Force the time to be between noon and 6:00 p.m. and simulate a cooling load by lowering the indoor air temperature set point below the ambient temperature. Verify that the tank starts discharging and the compressor is off. For systems designed to meet partial loads the system should be run until the TES storage is fully depleted. The number of hours of operation must meet or exceed the designed operational hours for the system.	☐ Pass ☐ Fail
e.	Force the time to be between 9:00 a.m. to noon, and simulate a cooling load by lowering the indoor air temperature set point below the ambient temperature. Verify that the tank does not discharge and the cooling load is met by the compressor only.	☐ Pass ☐ Fail
f.	Force the time to be between 9:00 p.m. and 9:00 a.m. and simulate a full tank charge by changing the output of the sensor to the EMS. Verify that the tank charging is stopped.	☐ Pass ☐ Fail
g.	Force the time to be between noon and 6:00 p.m. and simulate no cooling load by setting the indoor temperature set point above the ambient temperature. Verify that the tank does not discharge and the compressor is off.	☐ Pass ☐ Fail

C. PASS / FAIL Evaluation (check one):

☐	PASS: Construction Inspection responses are complete and all tests in step 2 pass.
☐	FAIL: Any **Construction Inspection** responses are incomplete *OR* there is one or more "Fail" responses in **Testing Results** section. Provide explanation below. Use and attach additional pages if necessary.

2008 Certificate of Field Verification and Diagnostic Testing Form

2008 Certificate of Field Verification and Diagnostic Testing — MECH-4-HERS

Air Distribution System Leakage Diagnostic

PROJECT NAME	DATE	TELEPHONE
PROJECT ADDRESS		_____ Checked by/Date Enforcement Agency Use
AIR DISTRIBUTION SYSTEM NAME OR LOCATION	PERMIT NUMBER	

Note: Submit one Certificate of Field Verification and Diagnostic Testing for each duct system that must demonstrate HERS verification compliance in the building.

When HERS verification compliance is demonstrated utilizing group sampling:

For new buildings, the HERS rater must test and field verify the first individual single zone package space conditioning equipment unit of each building. After the first unit passes, the builder or the HERS rater shall identify a group of up to seven package units in the building from which one sample will be selected for testing. If the first unit sampled fails the verification/diagnostic test, the HERS rater must pick another package unit from the group for verification / testing. If the second unit in the group fails the verification/diagnostic test, the HERS rater is required to verify/test all package units in the group.

For existing buildings the HERS rater must verify/test at least one sample from each designated sample group of single-zone package units a contractor installs. The same rules for re-sampling required for new buildings must be followed if a sample test fails to comply with the HERS verification requirements.

- ☐ When group sampling is used to demonstrate compliance with HERS verification requirements, the installer must provide a completed copy of the applicable Installation Certificate(s), and a copy of the completed Certificate(s) of Acceptance (MECH-4A) for every system in the HERS sample group.
- ☐ In order to demonstrate compliance for new duct systems, where cloth-backed, rubber adhesive duct tape is installed, mastic and draw bands must used in combination with the cloth-backed, rubber adhesive duct tape to seal leaks at duct connections.

DECLARATION STATEMENT

- I certify under penalty of perjury, under the laws of the State of California, the information provided on this form is true and correct.
- I am the certified HERS rater who performed the verification services identified and reported on this certificate (responsible rater).
- The installed feature, material, component, or manufactured device requiring HERS verification that is identified on this certificate (the installation) complies with the applicable requirements in Reference Nonresidential Appendices NA1, NA2, NA7, and the requirements specified on the Certificate(s) of Compliance approved by the local enforcement agency.
- The information reported on applicable sections of the Installation Certificate(s) that were signed and submitted by the person(s) responsible for the installation, and on applicable sections of the Certificate(s) of Acceptance that were signed and submitted by the person(s) responsible for the acceptance testing, conforms to the requirements specified on the Certificate(s) of Compliance approved by the enforcement agency, and field verification (where applicable) confirms the information reported on the Installation Certificate(s) and Certificate(s) of Acceptance is true and correct.

Builder or Installer information as shown on the Installation Certificate		
Company Name: (Installing Subcontractor or General Contractor or Builder/Owner)		
Name of responsible person for the installation:	CSLB Lic.#	
HERS Provider Data Registry Information		
Sample Group # (if applicable):	☐ tested/verified system	☐ not-tested/verified system from a HERS sample group
HERS Rater Information		
HERS Rater Company Name:		
Responsible Rater's Name:	Responsible Rater's Signature:	
Responsible Rater's Certification Number with this HERS Provider:	Date Signed:	

HERS Provider: _____ Registration Number: _____ Registration Date: _____

Air Distribution System Leakage Diagnostic

PROJECT NAME	DATE

	Nominal Rated Fan Flow Calculations	Enter Values	
1	Determine Nominal Rated Fan Flow using one of the following two calculation methods:		
	a) Cooling system method: Nominal Cooling Capacity _____ (tons) x 400 (cfm/ton) = _____ (cfm)		
	b) Heating system method: Output Capacity _____ (kBtuh) x 21.7 (cfm/kBtuh) = _____ (cfm)		
2	Enter the rated fan flow value from calculations 1(a) or 1(b) (cfm)		
	Air Distribution System Leakage Diagnostic for Completely New or Replacement Duct System		
3	Duct Pressurization Test Results (CFM @ 25 Pa). Enter Tested Leakage Flow in CFM:		
4	Pass if Leakage Percentage <6%: [_____(**Line # 3**) / _____(**Line # 2**)] x 100%	%	☐ Pass ☐ Fail
	ALTERATIONS: Pre-existing Duct System with Duct Alteration and/or HVAC Equipment Change-Out		
5	Enter Tested Leakage Flow in CFM: **Pre-Test** of Existing or Altered Duct System prior to Duct System Alteration and/or Equipment Change-Out.		
6	Enter Tested Leakage Flow in CFM: **Final Test** of New Duct System or Altered Duct System for Duct System Alteration and/or Equipment Change-Out.		
	TEST OR VERIFICATION STANDARDS: For Altered Duct System and/or HVAC Equipment Change-Out, Use one of the following Three Tests or Verification Standards for compliance:		
7	Pass if Leakage Percentage <15% [_____**(Line # 6)** / _____**(Line # 2)**] x 100%	%	☐ Pass ☐ Fail
8	For systems certified by the installer as reducing leakage, pass if Leakage Reduction is >60%. $\text{Leakage Reduction} = [1 - \frac{\text{(Line \#6 HERS Tested Leakage)}}{\text{(Line \#5 Installer's Certified Pre-Test Leakage)}}] \times 100\%$	%	☐ Pass ☐ Fail
9	Pass if all Accessible Leaks are sealed as confirmed by Visual Inspection and Verification by HERS rater (sampling rate 100%)		☐ Pass ☐ Fail
	Pass if One of Lines # 7 through # 9 pass		☐ Pass ☐ Fail

HERS Provider: _____ Registration Number: _____ Registration Date: _____

Appendix B Excerpts from the Appliance Efficiency Regulations~~Standards~~

Note: For equipment that is covered by both §112 of the Building Energy Efficiency Standards and the Appliance Efficiency Regulations, the requirements of §112 supersede the requirements in the Appliance Efficiency Regulations

Note: Maximum energy consumption standards for refrigerator-freezers with internal freezers are same as those for refrigerator-freezers with top-mounted freezers.

(2) See Section 1605.3(a) for energy efficiency and energy design standards for freezers with volume exceeding 30 ft^3 that are consumer products, wine chillers that are consumer products, commercial refrigerators including but not limited to refrigerated bottled or canned beverage vending machines, commercial refrigerator-freezers, commercial freezers, commercial ice-makers, and water dispensers.

(b) **Room Air Conditioners, Room Air-Conditioning Heat Pumps, Packaged Terminal Air Conditioners, and Packaged Terminal Heat Pumps.**

(1) **Room Air Conditioners and Room Air-Conditioning Heat Pumps.** The EER of room air conditioners and room air-conditioning heat pumps that are manufactured on or after the effective dates shown shall be not less than the applicable values shown in Table B-2 in the Appliance Efficiency Regulations-. The EER of room air conditioners and room air-conditioning heat pumps that are labeled for use at more than one voltage shall be not less than the applicable values shown in Table B-2 at each of the labeled voltages.

Table B-2
Standards for Room Air Conditioners and Room Air-Conditioning Heat Pumps

Appliance	***Louvered Sides***	***Cooling Capacity (Btu/hr)***	***Minimum EER***	
			Effective January 1, 1990	***Effective October 1, 2000***
Room Air Conditioner	Yes	< 6,000	8.0	9.7
Room Air Conditioner	Yes	□ 6,000 – 7,999	8.5	9.7
Room Air Conditioner	Yes	□ 8,000 – 13,999	9.0	9.8
Room Air Conditioner	Yes	□ 14,000 – 19,999	8.8	9.7
Room Air Conditioner	Yes	□ 20,000	8.2	8.5
Room Air Conditioner	No	< 6,000	8.0	9.0
Room Air Conditioner	No	□ 6,000 – 7,999	8.5	9.0
Room Air Conditioner	No	□ 8,000 – 19,999	8.5	8.5
Room Air Conditioner	No	□ 20,000	8.2	8.5
Room Air Conditioning Heat Pump	Yes	< 20,000	8.5	9.0
Room Air Conditioning Heat Pump	Yes	□ 20,000	8.5	8.5
Room Air Conditioning Heat Pump	No	< 14,000	8.0	8.5
Room Air Conditioning Heat Pump	No	□ 14,000	8.0	8.0
Casement-Only Room Air Conditioner	Either	Any	*	8.7
Casement-Slider Room Air Conditioner	Either	Any	*	9.5

*Casement-only room air conditioners and casement-slider room air conditioners are not separate product classes under standards effective January 1, 1990. Such appliances, if manufactured before October 1, 2000, are subject to the applicable standards in Table B-2 for the other room air conditioners and room air-conditioning heat pumps based on capacity and the presence or absence of louvered sides.

(2) **Packaged Terminal Air Conditioners and Packaged Terminal Heat Pumps.** The EER and COP, as applicable, of packaged terminal air conditioners and packaged terminal heat pumps shall be not less than the applicable values shown in Table B-3 in the Appliance Efficiency Regulations.

Table B-3
Standards for Packaged Terminal Air Conditioners and Packaged Terminal Heat Pumps

Appliance	***Mode***	***Cooling Capacity (Btu/hr)***	***Minimum EER or COP***
Packaged terminal air conditioners and packaged terminal heat pumps	Cooling	□ 7,000	8.88 EER
		> 7,000 and < 15,000	10.0 □ (0.00016 x Cap.) EER
		□ 15,000	7.6 EER
Packaged terminal heat pumps	Heating	Any	1.3 + [0.16 (10.0 – 0.00016 x Cap.)] COP ~~COP~~
Cap. = cooling capacity (Btu/hr)			

(c) **Central Air Conditioners**.

(1) **Central Air Conditioners Other than Water-Source Heat Pumps Below 240,000 Btu/hr.** The EER, SEER, COP, and HSPF, as applicable, of all central air conditioners shall be not less than the applicable values shown in Tables C-2, C-3, C-4, and C-5.

Table C-2
Standards for Single Phase Air-Cooled Air Conditioners with Cooling Capacity Less than 65,000 Btu per Hour and Single Phase Air-Source Heat Pumps with Cooling Capacity Less than 65,000 Btu per Hour, Not Subject to EPAct

Appliance	***Minimum Efficiency***			
	Effective January 1, 1995		***Effective January 23, 2006***	
	Minimum SEER	***Minimum HSPF***	***Minimum SEER***	***Minimum HSPF***
Split system air conditioners	10.0	—	13.0	—
Split system heat pumps	10.0	6.8	13.0	7.7
Single package air conditioners	9.7	—	13.0	—
Single package heat pumps	9.7	6.6	13.0	7.7
Space constrained air conditioners – split system	10.0	—	reserved	—
Space constrained heat pumps – split system	10.0	6.8	reserved	reserved
Space constrained air conditioners – single package	9.7	—	reserved	—
Space constrained heat pumps – single package	9.7	6.6	reserved	reserved

Table C-3
Standards for Air-Cooled Air Conditioners and Air-Source Heat Pumps Subject to EPAct

Appliance	*Cooling Capacity (Btu/hr)*	*System Type*	*Minimum Efficiency*
Air-cooled unitary air conditioners and heat pumps (cooling mode)	< 65,000 *	Split system	10.0 SEER
	< 65,000 *	Single package	9.7 SEER
	□ 65,000 and < 135,000	All	8.9 EER
	□ 135,000 and < 240,000	All	8.5 EER
Air-cooled unitary air-conditioning heat pumps (heating mode)	< 65,000 *	Split system	6.8 HSPF
	< 65,000 *	Single package	6.6 HSPF
	□ 65,000 and < 135,000	All	3.0 COP at 47° F db
	□ 135,000 and < 240,000	All	2.9 COP
* Three phase models only.			

Table C-4
Standards for Evaporatively-Cooled Air Conditioners

Appliance	*Cooling Capacity (Btu per hour)*	*Minimum EER*		
		Effective January 1, 1994	*Effective October 29, 2003*	*Effective October 29, 2004*
Evaporatively-cooled air conditioners	< 65,000	9.3	12.1	12.1
	□ 65,000 and < 135,000	10.5	11.5[1]	11.5[1]
	□ 135,000 < 240,000	9.6	9.6	11.0
[1] Deduct 0.2 from the required EER for units with heating sections other than electric resistance heat.				

Table C-5
Standards for Water-Cooled Air Conditioners and Water-Source Heat Pumps

Appliance	*Cooling Capacity (Btu per hour)*	*Minimum Efficiency*					
		Effective January 1, 1995		*Effective October 29, 2003*		*Effective October 29, 2004*	
		Minimum		*Minimum*		*Minimum*	
		EER	*COP*	*EER*	*COP*	*EER*	*COP*
Water-cooled air conditioners	< 17,000	9.3	—	12.1	—	12.1	—
Water-source heat pumps	< 17,000	9.3	3.8	11.2	4.2	11.2	4.2
Water-cooled air conditioners	□ 17,000 and < 65,000	9.3	—	12.1	—	12.1	—
Water-source heat pumps	□ 17,000 and < 65,000	9.3	3.8	12.0	4.2	12.0	4.2
Water-cooled air conditioners	□ 65,000 and < 135,000	10.5	—	11.5[1]	—	11.5	—
Water-source heat pumps	□ 65,000 and < 135,000	10.5	3.8	12.0	4.2	12.0	4.2
Water-cooled air conditioners	□ 135,000 and < 240,000	9.6	—	9.6	—	11.0	—
Water-source heat pumps	□ 135,000 and < 240,000	9.6	2.9	9.6	2.9	9.6	2.9

[1] Deduct 0.2 from the required EER for units with heating sections other than electric resistance heat.

~~(2) **Water-Source Heat Pumps below 135,000 Btu per Hour.** The California standard for water-source heat pumps equal to or greater than 65,000 Btu/hr and less than 135,000 Btu/hr is identical to the federal standards shown in Table C-5. The California standard for water- source heat pumps less than 65,000 Btu/hr is shown in Table C-7 in Section 1605.3(c)(1).~~

(2) **Gas-fired Air Conditioners and Heat Pumps.** There is no energy efficiency standard or energy design standard for gas-fired air conditioners or gas-fired heat pumps.

(3) **Other Central Air Conditioners.** See Sections 1605.2(c) and 1605.3(c) for energy efficiency standards for other central air conditioners.

(d) **Spot Air Conditioners, Evaporative Coolers, Ceiling Fans, Whole House Fans, and Residential Exhaust Fans.**

There is no energy efficiency standard or energy design standard for spot air conditioners, evaporative coolers, ceiling fans, whole house fans, or residential exhaust fans.

(e) **Gas and Oil Space Heaters**.

(1) **Gas Wall Furnaces, Gas Floor Furnaces, and Gas Room Heaters.** The AFUE of gas wall furnaces, gas floor furnaces, and gas room heaters shall be not less than the applicable values shown in Table E-2.

Table E-2
Standards for Gas Wall Furnaces, Floor Furnaces, and Room Heaters

Appliance	*Design Type*	*Capacity (Btu per hour)*	*Minimum AFUE (%)*
Wall furnace	Fan	□ 42,000	73
Wall furnace	Fan	> 42,000	74
Wall furnace	Gravity	□ 10,000	59
Wall furnace	Gravity	> 10,000 □ 12,000	60
Wall furnace	Gravity	> 12,000 □ 15,000	61
Wall furnace	Gravity	> 15,000 □ 19,000	62
Wall furnace	Gravity	> 19,000 □ 27,000	63
Wall furnace	Gravity	> 27,000 □ 46,000	64
Wall furnace	Gravity	> 46,000	65
Floor furnace	All	□ 37,000	56
Floor furnace	All	> 37,000	57
Room heater	All	□ 18,000	57
Room heater	All	> 18,000 and □ 20,000	58
Room heater	All	> 20,000 and □ 27,000	63
Room heater	All	> 27,000 and □ 46,000	64
Room heater	All	> 46,000	65

(2) **Central Gas Furnaces, Central Gas Boilers, Central Oil Furnaces, and Central Oil Boilers.** The AFUE, thermal efficiency, and combustion efficiency, as applicable, of central gas furnaces, central gas boilers, central oil furnaces, and central oil boilers shall be not less than the applicable values shown in Tables E-3 and E-4.

Table E-3
Standards for Gas- and Oil-Fired Central Boilers

Appliance	*Rated Input (Btu/hr)*	*Minimum Efficiency (%)*	
		AFUE	*Combustion Efficiency at Maximum Rated Capacity*
Gas steam boilers with single phase electrical supply	< 300,000	75	—
All other boilers with single phase electrical supply	< 300,000	80	—
Gas packaged boilers	□ 300,000	—	80
Oil packaged boilers	□ 300,000	—	83

Table E-4
Standards for Gas- and Oil-Fired Central Furnaces

Appliance	*Rated Input (Btu/hr)*	*Minimum Efficiency (%)*	
		AFUE	*Thermal Efficiency*
Mobile home gas and oil central furnaces with single phase electrical supply	< 225,000	75	—
All other gas and oil central furnaces with single phase electrical supply	< 225,000	78	—
Gas central furnaces	□ 225,000	—	80
Oil central furnaces	□ 225,000	—	81

(3) **Infrared Gas Heaters.** There is no energy efficiency standard or energy design standard for infrared gas heaters.

(4) **Other Gas and Oil Space Heaters.** See Section 1605.3(e) for standards for boilers, central furnaces, duct furnaces, and unit heaters that are not federally-regulated consumer products or federally-regulated commercial and industrial equipment.

(f) **Water Heaters.**

(1) **Large Water Heaters**. The thermal efficiency and standby loss of large water heaters manufactured during the applicable time period shall be not less than the applicable values shown in Tables F-2, F-3, and F-4.

~~Table F-2~~
~~Standards for Large Water Heaters~~
~~(Effective January 1, 1994 through October 28, 2003~~)

~~*Fuel*~~	~~*Input Rating*~~	~~*Volume (gallons)*~~	~~*Input to Volume Ratio (Btu/gal)*~~	~~*Minimum Thermal Efficiency (%)*~~	~~*Maximum Standby Loss (%/hour)*~~[1]
~~Gas~~	~~> 75,000 and □ 155,000 (Btu/hour)~~	~~All~~	~~< 4,000~~	~~78~~	~~1.3 + 114/V~~
~~Oil~~	~~> 105,000 and □ 155,000 (Btu/hour)~~	~~All~~	~~< 4,000~~	~~78~~	~~1.3 + 114/V~~
~~Gas, oil~~	~~> 155,000 (Btu/hour)~~	~~□ 140~~	~~< 4,000~~	~~78~~	~~1.3 + 95/V~~
~~Gas, oil~~	~~> 155,000 (Btu/hour)~~	~~> 140~~	~~< 4,000~~	~~78~~	~~1.3 + 95/V~~[2]
~~Gas~~	~~> 200,000 (Btu/hour)~~	~~< 10~~	~~□ 4,000~~	~~80~~	~~—~~
~~Oil~~	~~> 210,000 (Btu/hour)~~	~~< 10~~	~~□ 4,000~~	~~80~~	~~—~~
~~Gas~~	~~> 200,000 (Btu/hour)~~	~~□ 10~~	~~□ 4,000~~	~~77~~	~~2.3 + 67/V~~
~~Oil~~	~~> 210,000 (Btu/hour)~~	~~□ 10~~	~~□ 4,000~~	~~77~~	~~2.3 + 67/V~~
~~Electric~~	~~> 12 kW~~	~~□ 140~~	~~< 4,000~~	~~—~~	~~0.3 + 27/V~~
~~Electric~~	~~> 12 kW~~	~~> 140~~	~~< 4,000~~	~~—~~	~~0.3 + 27/V~~[2]
~~Electric~~	~~> 12 kW~~	~~< 10~~	~~□ 4,000~~	~~80~~	~~—~~
~~Electric~~	~~> 12 kW~~	~~□ 10~~	~~□ 4,000~~	~~77~~	~~2.3 + 67/V~~

~~[1] Volume (V) = measured storage volume in gallons~~

~~[2] Storage-type water heaters with volume exceeding 140 gallons need not meet the standby loss requirement if they are thermally insulated to at least R-12.5 and if a standing pilot light is not used.~~

Table F-~~3~~2
Standards for Large Water Heaters
~~(New Standards~~ Effective October 29, 2003~~)~~

Appliance	*Category*	*Size or Rating*	*Minimum Thermal Efficiency (%)*	*Maximum Standby Loss[1,2]*
Gas storage water heaters	< 4,000 Btu/hr/gal	< 155,000 Btu/hr	80	Q/800 + 110√V Btu/hr
		> 155,000 Btu/hr	80	Q/800 + 110√V Btu/hr
Gas instantaneous water heaters	□ 4,000 Btu/hr/gal	□ 10 gal	80	Q/800 + 110√V Btu/hr
Oil storage water heaters	< 4,000 Btu/hr/gal	< 155,000 Btu/hr	78	Q/800 + 110√V Btu/hr
		> 155,000 Btu/hr	78	Q/800 + 110√V Btu/hr
Oil instantaneous water heaters	□ 4,000 Btu/hr/gal	< 10 gal	80	–
		□ 10 gal	78	Q/800 + 110√V Btu/hr
Gas hot water supply boilers	□ 4,000 Btu/hr/gal	□ 10 gal	80	Q/800 + 110√V Btu/hr
Oil hot water supply boilers	□ 4,000 Btu/hr/gal	□ 10 gal	78	Q/800 + 110√V Btu/hr
~~Electric water heaters~~	~~All~~	~~All~~	~~No requirement~~	~~0.30 + 27/V % Per hour~~

[1] Standby loss is based on a 70º F temperature difference between stored water and ambient requirements. In the standby loss equations, V is the rated volume in gallons, and Q is the nameplate input rate in Btu/hr.

[2] Water heaters and hot water supply boilers having more than 140 gallons of storage capacity are not required to meet the standby loss requirement if the tank surface is thermally insulated to
R-12.5, if a standing pilot light is not installed, and for gas- or oil-fired storage water heaters, there is a flue damper or fan-assisted combustion.

Table F-~~4~~3
Standards for Large Water Heaters
(~~Existing Standards Remaining in~~ Effective ~~On and After October~~January 1, ~~29,~~ 1994~~2003)~~

Fuel	*Input Rating*	*Volume (gallons)*	*Input to Volume Ratio (Btu/gal)*	*Minimum Thermal Efficiency (%)*	*Maximum Standby Loss (%/hour)*[1,2]
Gas	> 200,000 (Btu/hour)	< 10	□ 4,000	80	Not applicable
Electric	> 12 kW	□ 140	< 4,000	Not applicable	0.3 + 27/V
Electric	> 12 kW	> 140	< 4,000	Not applicable	0.3 + 27/V
Electric	> 12 kW	< 10	□ 4,000	80	Not applicable
Electric	> 12 kW	□ 10	□ 4,000	77	2.3 + 67/V

[1] Volume (V) = measured storage volume in gallons

[2] Storage-type water heaters with volume exceeding 140 gallons need not meet the standby loss requirement if they are thermally-insulated to at least R-12.5 and if a standing pilot light is not used.

(2) **Small Water Heaters**. The energy factor of all small water heaters that are federally-regulated consumer products, (other than booster water heaters, hot water dispensers, and mini-tank electric water heaters) shall be not less than the applicable values shown in Table F-~~5~~4.

Table F-~~5~~4
Standards for Small Federally-Regulated Water Heaters

Appliance	*Minimum Energy Factor*	
	Effective April 15, 1991	*Effective January 20, 2004*
Gas-fired storage-type water heaters	0.62 – (.0019 x V)	0.67 – (.0019 x V)
Oil-fired water heaters (storage and instantaneous)	0.59 – (.0019 x V)	0.59 – (.0019 x V)
Electric storage water heaters (excluding tabletop water heaters)	0.93 - (.00132 x V)	0.97 - (.00132 x V)
Electric tabletop water heaters	0.93 - (.00132 x V)	0.93 - (.00132 x V)
Gas-fired instantaneous water heaters	0.62 – (.0019 x V)	0.62 – (.0019 x V)
Electric instantaneous water heaters (excluding tabletop water heaters)	0.93 - (.00132 x V)	0.93 - (.00132 x V)
Heat pump water heaters	0.93 - (.00132 x V)	0.97 - (.00132 x V)
V = rated volume in gallons.		

(3) **Booster Water Heaters.** There is no energy efficiency standard or energy design standard for booster water heaters.

(4) **Other Water Heaters.** See Section 1605.3(f) for standards for other water heaters.

(5) **Combination Space-Heating and Water-Heating Appliances.** See Section 1605.3(e) for standards for combination space-heating and water-heating appliances.

(g) **Pool Heaters, Residential Pool Pumps, and Portable Electric Spas.**

(1) **Energy Efficiency Standard for Gas-Fired Pool Heaters and Oil-Fired Pool Heaters.** The thermal efficiency of gas-fired pool heaters and oil-fired pool heaters shall be not less than 78 percent.

(2) **Energy Efficiency Standards for Heat Pump Pool Heaters.** See Section 1605.3(g) for energy efficiency standards for heat pump pool heaters.

(3) **Energy Efficiency Standard for Electric Resistance Pool Heaters.** There is no energy efficiency standard for electric resistance pool heaters.

(4) **Energy Design Standards for Pool Heaters**. See Section 1605.3(g) for energy design standards for pool heaters.

(5) **Energy Efficiency Standards for Portable Electric Spas**. See Section 1605.3(g) for energy efficiency standards for portable electric spas.

(6) **Energy Efficiency Standards and Energy Design Standards for Residential Pool Pumps**. See Section 1605.3(g) for energy efficiency standards and energy design standards for residential pool pumps.

(h) **Plumbing Fittings.**

(1) **Plumbing Fittings Except Tub Spout Diverters and Commercial Pre-rinse Spray Valves.** The flow rate of showerheads, lavatory faucets, kitchen faucets, lavatory replacement aerators, kitchen replacement aerators, wash fountains, and metering faucets shall be not greater than the applicable values shown in Table H-1. Showerheads shall also meet the requirements of ASME/ANSI Standard A112.18.1M-1996, 7.4.4(a).

Table H-1
Standards for Plumbing Fittings

Appliance	***Maximum Flow Rate***
Showerheads	2.5 gpm at 80 psi
Lavatory faucets	2.2 gpm at 60 psi
Kitchen faucets	2.2 gpm at 60 psi
Replacement aerators	2.2 gpm at 60 psi
Wash fountains	$2.2 \times \frac{\text{rim space (inches)}}{20}$ gpm at 60 psi
Metering faucets	0.25 gallons/cycle
Metering faucets for wash fountains	$0.25 \times \frac{\text{rim space (inches)}}{20}$ gpm at 60 psi

(2) **Showerhead-Tub Spout Diverter Combinations.** Showerhead-tub spout diverter combinations shall meet both the standard for showerheads and the standard for tub spout diverters.

(3) **Tub Spout Diverters**. See Section 1605.3(h) for standards for tub spout diverters.

(4) **Commercial Pre-rinse Spray Valves**. See Section 1605.3(h) for standards for commercial pre-rinse spray valves.

(i) **Plumbing Fixtures.**

The water consumption of water closets and urinals shall be not greater than the values shown in Table I.

Table I
Standards for Plumbing Fixtures

Appliance	***Maximum Gallons per Flush***
Gravity tank-type water closets	1.6
Flushometer tank water closets	1.6
Electromechanical hydraulic water closets	1.6
Blowout water closets	3.5
Trough-type urinals	$\frac{\text{trough length (inches)}}{16}$
Other urinals	1.0

(j) **Fluorescent Lamp Ballasts and Replacement Fluorescent Lamp Ballasts.**

(1) The ballast efficacy factor of the following types of fluorescent lamp ballasts shall be not less than the applicable values shown in Table J-1, except that fluorescent lamp ballasts (i) designed for dimming, (ii) designed for use in ambient temperatures of 0° F or less, or (iii) with a power factor of less than 0.90 and designed for use only in residential buildings are excluded:

(A) replacement fluorescent lamp ballasts manufactured on or before June 30, 2010;

(B) fluorescent lamp ballasts manufactured on or after January 1, 1990;

(C) fluorescent lamp ballasts sold by the manufacturer on or after April 1, 1990; and

(D) fluorescent lamp ballasts incorporated into a luminaire by a luminaire manufacturer on or after April 1, 1991.

Table J-1
Standards for Fluorescent Lamp Ballasts and Replacement Fluorescent Lamp Ballasts

Application for Operation of	***Ballast Input Voltage***	***Total Nominal Lamp Watts***	***Minimum Ballast Efficacy Factor***
one F40T12 lamp	120 or 277	40	1.805
two F40T12 lamps	120	80	1.060
	277	80	1.050
two F96T12 lamps	120 or 277	150	0.570
two F96T12HO lamps	120 or 277	220	0.390

(2) The ballast efficacy factor of the following types of fluorescent lamp ballasts shall be not less than the applicable values shown in Table J-2, except that fluorescent lamp ballasts (i) designed for dimming to 50 percent or less of maximum output, (ii) designed for use with two F96T12HO lamps at ambient temperatures of –20° F or less and for use in an outdoor sign, (iii) with a power factor of less than 0.90 and designed and labeled for use only in residential buildings, or (iv) designated as a replacement ballast as defined in Section 1602(j) are excluded:

(A) fluorescent lamp ballasts manufactured on or after April 1, 2005;

(B) fluorescent lamp ballasts sold by the manufacturer on or after July 1, 2005;

(C) replacement fluorescent lamp ballasts manufactured after June 30, 2010; and

(D) fluorescent lamp ballasts incorporated into a luminaire by a luminaire manufacturer on or after April 1, 2006.

Table J-2
Standards for Fluorescent Lamp Ballasts

Application for Operation of	*Ballast Input Voltage*	*Total Nominal Lamp Watts*	*Minimum Ballast Efficacy Factor*
one F40T12 lamp	120 or 277	40	2.29
two F40T12 lamps	120 or 277	80	1.17
two F96T12 lamps	120 or 277	150	0.63
two F96T12HO lamps	120 or 277	220	0.39

(3) All fluorescent lamp ballasts covered by paragraphs (1) or (2) except replacement fluorescent lamp ballasts, shall have a power factor of 0.90 or greater.

(4) There are no energy efficiency standards or energy design standards for ballasts designed to operate T5 lamps, T8 lamps, three T12 lamps, or four T12 lamps.

(k) **Lamps.**

(1) **General Service Fluorescent Lamps That Are Federally-Regulated Appliances**. The average lamp efficacy and the color rendering index of general service fluorescent lamps shall be not less than the applicable values shown in Table K-1.

Table K-1
Standards for Federally-Regulated General Service Fluorescent Lamps

Appliance	*Nominal Lamp Wattage*	*Minimum Color Rendering Index (CRI)*	*Minimum Average Lamp Efficacy (LPW)*
4-foot medium bi-pin lamps	> 35	69	75.0
	□ 35	45	75.0
2-foot U-shaped lamps	> 35	69	68.0
	□ 35	45	64.0
8-foot slimline lamps	> 65	69	80.0
	□ 65	45	80.0
8-foot high output lamps	> 100	69	80.0
	□ 100	45	80.0

(2) **Incandescent Reflector Lamps That Are Federally-Regulated Appliances**. The average lamp efficacy of incandescent reflector lamps shall be not less than the applicable values shown in Table K-2.

Table K-2
Standards for Federally-Regulated Incandescent Reflector Lamps

Nominal Lamp Wattage	***Minimum Average Lamp Efficacy (LPW)***
40-50	10.5
51-66	11.0
67-85	12.5
86-115	14.0
116-155	14.5
156-205	15.0

(3) See Section 1605.3(k) for energy efficiency standards for ~~lamps that are~~ state-regulated general service incandescent lamps..

(l) **Emergency Lighting**.

See Section 1605.3(l) for energy efficiency standards for illuminated exit signs.

(m) **Traffic Signal Modules and Traffic Signal Lamps**.

See Section 1605.3(m) for energy efficiency standards for traffic signal modules and traffic signal lamps.

(n) **Luminaires**.

See Section 1605.3(n) for energy efficiency standards and energy design standards for luminaires.

(o) **Dishwashers.**

The energy factor of dishwashers that are consumer products shall be not less than the applicable values shown in Table O.

Table O
Standards for Dishwashers

Appliance	*Minimum Energy Factor (cycles/kWh)*
Compact dishwashers	0.62
Standard dishwashers	0.46

(p) **Clothes Washers.**

(1) **Energy Efficiency Standards for Residential Clothes Washers**. The energy factor and modified energy factor of clothes washers that are consumer products shall be not less than the applicable values shown in Table P-2.

Table P-2
Energy Efficiency Standards for Residential Clothes Washers

Appliance	*Minimum Energy Factor [ft^3/(kWh/cycle)] Effective May 14, 1994 Through December 31, 2003*	*Minimum Modified Energy Factor [ft^3/(kWh/cycle)]**	
		Effective January 1, 2004	*Effective January 1, 2007*
Top-loading compact clothes washers	0.90	0.65	0.65
Top-loading standard clothes washers	1.18	1.04	1.26
Top-loading, semi-automatic	N/A[1]	N/A[1]	N/A[1]
Front-loading clothes washers	N/A[1]	1.04	1.26
Suds-saving	N/A[1]	N/A[1]	N/A[1]

[1]Must have an unheated rinse water option.

*The sum of the machine electrical energy consumption, the hot water energy consumption, and the energy required for removal of the remaining moisture in the wash load.

(2) **Energy Design Standard for Top-Loading Semi-Automatic Clothes Washers and Suds-Saving Clothes Washers.** Top-loading semi-automatic clothes washers that are consumer products and suds-saving clothes washers that are consumer products shall have an unheated rinse water option and do not need to meet the Modified Energy Factor standard shown in Table P-2.

(3) **Energy Design Standard for Front-Loading Clothes Washers.** Until December 31, 2003, front-loading clothes washers that are consumer products shall have an unheated rinse water option.

(4) **Water Efficiency Standards for Clothes Washers.** See Sections 1605.2(p) and 1605.3(p) for water efficiency standards for clothes washers.

(5) **Clothes Washers that are Not Consumer Products.** See Section 1605.3(p) for energy efficiency standards and energy design standards for clothes washers that are not consumer products.

(q) **Clothes Dryers.**

(1) **Energy Efficiency Standards for Gas Clothes Dryers and Electric Clothes Dryers.** The energy factor of gas clothes dryers that are consumer products and electric clothes dryers that are consumer products shall be not less than the applicable values shown in Table Q.

Table Q
Standards for Clothes Dryers

Appliance	***Minimum Energy Factor (lbs/kWh)***
Electric, standard clothes dryers	3.01
Electric, compact, 120 volt clothes dryers	3.13
Electric, compact, 240 volt clothes dryers	2.90
Gas clothes dryers	2.67

(2) **Energy Design Standard for Gas Clothes Dryers.** Gas clothes dryers that are consumer products shall not be equipped with a constant burning pilot.

(r) **Cooking Products and Food Service Equipment.**

(1) **Energy Design Standard for Gas Cooking Products with an Electrical Supply Cord.** Gas cooking products that are consumer products and that are equipped with an electrical supply cord shall not be equipped with a constant burning pilot.

(2) **Hot Food Holding Cabinets.** See Section 1605.3(r) for energy efficiency standards for commercial hot food holding cabinets.

(3) **Other Cooking Products and Food Service Equipment.** There is no energy efficiency standard or energy design standard for other cooking products or for food service equipment.

(s) **Electric Motors.**

(1) Except as provided in paragraph (2) of this subsection, the nominal full-load efficiency of all electric motors that are federally-regulated commercial and industrial equipment shall be not less than the applicable values shown in Table S.

Table S
Standards for Electric Motors

Motor Horsepower	***Minimum Nominal Full-Load Efficiency***					
	Open Motors			***Closed Motors***		
	6 poles	***4 poles***	***2 poles***	***6 poles***	***4 poles***	***2 poles***
□1 <1.5	80.0	82.5	. . .	80.0	82.5	75.5
□1.5 <2	84.0	84.0	82.5	85.5	84.0	82.5
□2 <3	85.5	84.0	84.0	86.5	84.0	84.0
□3 <5	86.5	86.5	84.0	87.5	87.5	85.5
□5 <7.5	87.5	87.5	85.5	87.5	87.5	87.5
□7.5 <10	88.5	88.5	87.5	89.5	89.5	88.5
□10 <15	90.2	89.5	88.5	89.5	89.5	89.5
□15 <20	90.2	91.0	89.5	90.2	91.0	90.2
□20 <25	91.0	91.0	90.2	90.2	91.0	90.2
□25 <30	91.7	91.7	91.0	91.7	92.4	91.0
□30 <40	92.4	92.4	91.0	91.7	92.4	91.0
□40 <50	93.0	93.0	91.7	93.0	93.0	91.7
□50 <60	93.0	93.0	92.4	93.0	93.0	92.4
□60 <75	93.6	93.6	93.0	93.6	93.6	93.0
□75 <100	93.6	94.1	93.0	93.6	94.1	93.0
□100 <125	94.1	94.1	93.0	94.1	94.5	93.6
□125 <150	94.1	94.5	93.6	94.1	94.5	94.5
□150 <200	94.5	95.0	93.6	95.0	95.0	94.5
200	94.5	95.0	94.5	95.0	95.0	95.0

(2) The standards in this subsection do not apply to electric motors that are (A) installed and sold within another appliance that is within the scope of this Article or (B) installed in low-rise residential buildings.

(t) **Distribution Transformers.**

See Section 1605.3(t) for energy efficiency standards for distribution transformers.

(u) **Power Supplies and Consumer Audio and Video Equipment.**

See Section 1605.3(u) for energy efficiency standards for power supplies and consumer audio and video equipment.

The following documents are incorporated by reference in Section 1605.1

ASME/ANSI A112.8.1M-1996	Plumbing Fixture Fittings
Copies available from:	ASME International Three Park Avenue New York, NY 10016-5990 www.asme.org Phone: (800) THE-ASME (U.S./Canada) 95-800-843-2763 (Mexico) (973) 882-1167 (Outside North America)

NOTE: Authority cited: Sections 25213, 25218(e), 25402(a)-(c), 25553(b) and 25960, Public Resources Code.
Reference: Sections 25216.5(d), 25402(a)-(c), 25553(b) and 25960, Public Resources Code.

(b) **Room Air Conditioners, Room Air-Conditioning Heat Pumps, Packaged Terminal Air Conditioners, and Packaged Terminal Heat Pumps.**

See Section 1605.1(b) for energy efficiency standards for room air conditioners, room air conditioning heat pumps, packaged terminal air conditioners, and packaged terminal heat pumps that are federally-regulated consumer products or federally-regulated commercial and industrial equipment.

(c) **Central Air Conditioners.**

(1) **Energy Efficiency Standards for ~~Water-Source Heat Pumps,~~ Ground Water-Source Heat Pumps, and Ground-Source Heat Pumps.** The EER and COP for ground water-source heat pumps~~, ground water-source heat pumps,~~ and ground-source heat pumps manufactured on or after October 29,2003, shall be not less than the applicable values shown in Tables C-7 ~~and C-8~~.

~~**Table C-7**~~
~~**Standards for Water-Source and Ground Water-Source Heat Pumps Manufactured On or After January 1, 1993, but Before October 29, 2003**~~

~~*Appliance*~~	~~*Cooling Capacity (Btu/hr)*~~	~~*Standard Rating*~~		~~*Low Temperature Rating*~~	
		~~*Rating Condition*~~	~~*Minimum Standard*~~	~~*Rating Condition*~~	~~*Minimum Standard*~~
~~Water-source heat pumps (cooling)~~	~~< 65,000~~	~~85º F entering water temperature~~	~~10.0 EER~~	~~75º F entering water temperature~~	~~10.2 EER~~
~~Water-source heat pumps (cooling)~~	~~≥ 65,000 < 135,000~~	~~85º F entering water temperature~~	~~10.5 EER~~	~~—~~	~~—~~
~~Ground water-source heat pumps (cooling)~~	~~< 135,000~~	~~70º F entering water temperature~~	~~11.0 EER~~	~~50º F entering water temperature~~	~~11.5 EER~~
~~Ground water-source heat pumps (heating)~~	~~All~~	~~70º F entering water temperature[1,2]~~	~~3.5 COP~~	~~50º F entering water temperature[1,2]~~	~~3.0 COP~~

~~[1] Air entering indoor section 70º F db/60º F wb (maximum).~~
~~[2] Water flow rate per manufacturer's specifications.~~

Table C-78
Standards for Ground Water-Source and Ground-Source Heat Pumps
~~Manufactured On or After October 29, 2003~~

Appliance	*Rating Condition*	*Minimum Standard*
Ground water-source heat pumps (cooling)	59º F entering water temperature	16.2 EER
Ground water-source heat pumps (heating)	50º F entering water temperature	3.6 COP
Ground-source heat pumps (cooling)	77º F entering brine temperature	13.4 EER
Ground-source heat pumps (heating)	32º F entering brine temperature	3.1 COP

(2) **Energy Efficiency Standards for Computer Room Air Conditioners.** The EER of air-cooled, water-cooled, glycol-cooled, and evaporatively-cooled computer room air conditioners manufactured on or after the effective dates shown, shall be not less than the applicable values shown in Tables C-89 and C-910.

Table C-89
Standards for Air-Cooled Computer Room Air Conditioners

Appliance	*Cooling Capacity (Btu/hr)*	*Minimum EER (Btu/watt-hour)*			
		Effective January 1, 1998	*Effective March 1, 2003*	*Effective January 1, 2004*	*Effective January 1, 2006*
Air-cooled computer room air conditioners	< 65,000	8.3	9.3	10.7	11.0
	□ 65,000 and <135,000	7.7	8.3	10.4	10.4
	□ 135,000 and < 240,000	—	7.9	10.2	10.2

Table C-~~10~~9
Standards for Water-Cooled, Glycol-Cooled, and Evaporatively-Cooled Computer Room Air Conditioners

Appliance	***Cooling Capacity (Btu/hr)***	***Minimum EER (Btu/watt-hour)***			
		Effective January 1, 1998	***Effective March 1, 2003***	***Effective October 29, 2004***	***Effective October 29, 2006***
Water-cooled, glycol-cooled, and evaporatively-cooled computer room air conditioners	< 65,000	8.1	8.3	11.1	11.1
	□ 65,000 and <135,000	8.4	9.5	10.5	10.5
	□ 135,000 and < 240,000	—	8.6	8.6	10.0

(3) Energy Efficiency Standards for Large Air-Cooled Unitary Air Conditioners. The EER of air-cooled unitary air conditioners manufactured on or after on or after the effective dates shown, shall be not less than the applicable values shown in Table C-~~11~~10.

Table C-~~11~~10
Standards for Large Air-Cooled Packaged Air Conditioners

Appliance	***Cooling Capacity (Btu/hr)***	***Minimum Standards***	
		Effective October 1, 2006	***Effective January 1, 2010***
Air-cooled unitary air conditioners	≥240,000 and < 760,000	10.0 EER	10.5 EER

(4) **Gas-fired Air Conditioners and Heat Pumps.** There is no energy efficiency standard or energy design standard for gas-fired air conditioners or gas-fired heat pumps.

(5) **Other Central Air Conditioners.** See Sections 1605.1(c) and 1605.2(c) for energy efficiency standards for central air conditioners that are federally-regulated consumer products or federally-regulated commercial and industrial equipment.

(d) Spot Air Conditioners, Evaporative Coolers, Ceiling Fans, Whole House Fans, and Residential Exhaust Fans.

There is no energy efficiency standard or energy design standard for spot air conditioners, evaporative coolers, ceiling fans, whole house fans, and residential exhaust fans.

(e) Gas and Oil Space Heaters.

(1) **Boilers, Central Furnaces, Duct Furnaces, and Unit Heaters.**

(A) The efficiency of boilers, central furnaces, duct furnaces, and unit heaters shall be not less than, and the standby loss shall be not greater than, the applicable values shown in Tables E-5, E-6, and E-7.

Table E-5
Standards for Boilers

Appliance	***Output (Btu/hr)***	***Standards***		
		Minimum AFUE %	***Minimum Combustion Efficiency % ****	***Maximum Standby Loss (watts)***
Gas steam boilers with 3-phase electrical supply	< 300,000	75	—	—
All other boilers with 3-phase electrical supply	< 300,000	80	—	—
Natural gas, non-packaged boilers	□ 300,000	—	80	147
LPG Non-packaged boilers	□ 300,000	—	80	352
Oil, non-packaged boilers	□ 300,000	—	83	—
*At both maximum and minimum rated capacity, as provided and allowed by the controls.				

Table E-6
Standards for Furnaces

Appliance	*Application*	*Minimum Efficiency %*
Central furnaces with 3-phase electrical supply < 225,000 Btu/hour	Mobile Home	75 AFUE
	All others	78 AFUE or 80 Thermal Efficiency (at manufacturer's option)

Table E-7
Standards for Duct Furnaces and Unit Heaters

Appliance	*Fuel*	*Standards*		
		Minimum Thermal Efficiency %[1]		*Maximum Energy Consumption during standby (watts)*
		At maximum rated capacity	*At minimum rated capacity*	
Duct furnaces	Natural gas	80	75	10
Duct furnaces	LPG[2]	80	75	147
Unit heaters	Natural gas	80	74	10
Unit heaters	LPG[2]	80	74	147
Unit heaters	Oil	81	81	N/A

[1] As provided and allowed by the controls.
[2] Designed expressly for use with LPG.

(B) Natural gas-fired unit heaters and duct furnaces manufactured on or after January 1, 2006, shall have either power venting or an automatic flue damper.

(2) **Oil Wall Furnaces, Oil Floor Furnaces and Infrared Gas Space Heaters**. There are no energy efficiency standards or energy design standards for oil wall furnaces, oil floor furnaces, or infrared gas space heaters.

(3) **Combination Space-Heating and Water-Heating Appliances**.

(A) If part of a combination space-heating and water-heating appliance is a water heater, that part shall comply with the applicable water heater standards in Sections 1605.1(f) and 1605.3(f).

(B) If part of a combination space-heating and water-heating appliance is a furnace, boiler, or other space heater, that part shall comply with the applicable furnace, boiler, or other space heater standards in Sections 1605.1(e) and 1605.3(e).

(C) Water heaters that are federally-regulated appliances, and that are contained in combination space-heating and water-heating appliances that are federally-regulated appliances, are required only to meet the standard for the applicable type of water heater, and are not required to meet any standard for space heaters.

(4) **Other Gas and Oil Space Heaters.** See Section 1605.1(e) for standards for gas and oil space heaters that are federally-regulated.

(f) **Water Heaters.**

(1) **Hot Water Dispensers and Mini-Tank Electric Water Heaters.** The standby loss of hot water dispensers and mini-tank electric water heaters manufactured on or after March 1, 2003 shall be not greater than 35 watts.

EXCEPTION: This subsection does not apply to any water heater:
(1) that is within the scope of 42 U.S.C. Sections 6292(a)(4) or 6311(1)(F),
(2) that has a rated storage volume of less than 20 gallons, and
(3) for which there is no federal test method applicable to that type of water heater.

(2) **Small Water Heaters that are Not Federally-Regulated Consumer Products**. The energy factor of small water heaters manufactured on or after March 1, 2003 that are not federally-regulated consumer products, other than hot water dispensers, booster water heaters, and mini-tank electric water heaters, shall be not less than the applicable values shown in Table F-~~6~~5.

EXCEPTION: This subsection does not apply to any water heater
(1) that is within the scope of 42 U.S.C. Sections 6292(a)(4) or 6311(1)(F),
(2) that has a rated storage volume of less than 20 gallons, and
(3) for which there is no federal test method applicable to that type of water heater.

Table F-~~6~~5
Standards for Small Water Heaters that are Not Federally-Regulated Consumer Products

Appliance	*Energy Source*	*Input Rating*	*Rated Storage Volume (gallons)*	*Minimum Energy Factor*[1]
Storage water heaters	Gas	□ 75,000 Btu/hr	< 20	0.62 – (.0019 x V)
Storage water heaters	Gas	□ 75,000 Btu/hr	> 100	0.62 – (.0019 x V)
Storage water heaters	Oil	□ 105,000 Btu/hr	> 50	0.59 – (.0019 x V)
Storage water heaters	Electricity	□ 12 kW	> 120	0.93 – (.00132 x V)
Instantaneous Water Heaters	Gas	□ 50,000 Btu/hr	Any	0.62 – (.0019 x V)
Instantaneous Water Heaters	Gas	□ 200,000 Btu/hr	□ 2	0.62 – (.0019 x V)
Instantaneous Water Heaters	Oil	□ 210,000 Btu/hr	Any	0.59 – (.0019 x V)
Instantaneous Water Heaters	Electricity	□ 12 kW	Any	0.93 – (.00132 x V)
[1]Volume (V) = rated storage volume in gallons.				

(3) **Energy Efficiency Standards for Combination Space-Heating and Water-Heating Appliances**. See Section 1605.3(e)(3) for standards for combination space-heating and water-heating appliances.

(4) **Energy Efficiency Standards for Water Heaters**. See Section 1605.1(f) for standards for water heaters that are federally-regulated consumer products or federally-regulated commercial and industrial equipment.

(5) **Energy Efficiency Standards for Booster Water Heaters.** There is no energy efficiency standard or energy design standard for booster water heaters.

(g) **Pool Heaters, Residential Pool Pumps, and Portable Electric Spas.**

(1) **Energy Design Standard for Natural Gas Pool Heaters.** Natural gas pool heaters shall not be equipped with constant burning pilots.

(2) **Energy Design Standard for All Pool Heaters.** All pool heaters shall have a readily accessible on-off switch that is mounted on the outside of the heater and that allows shutting off the heater without adjusting the thermostat setting.

(3) **Energy Efficiency Standard for Heat Pump Pool Heaters.** For heat pump pool heaters manufactured on or after March 1, 2003, the average of the coefficient of performance (COP) at Standard Temperature Rating and the coefficient of performance (COP) at Low Temperature Rating shall be not less than 3.5.

(4) **Energy Efficiency Standards for Gas and Oil Pool Heaters.** See Section 1605.1(g) for energy efficiency standards for gas and oil pool heaters that are federally-regulated consumer products.

(5) **Residential Pool Pumps.**

(A) **Motor Efficiency.** Pool pump motors manufactured on or after January 1, 2006 may not be split-phase or capacitor start – induction run type.

(B) **Two-Speed Capability.**

(i) **Pump Motors.** Pool pump motors with a capacity of 1 HP or more which are manufactured on or after January 1, 2008, shall have the capability of operating at two or more speeds with a low speed having a rotation rate that is no more than one-half of the motor's maximum rotation rate.

(ii) **Pump Controls.** Pool pump motor controls manufactured on or after January 1, 2008 shall have the capability of operating the pool pump at ~~at~~ least two speeds. The default circulation speed shall be the lowest speed, with a high speed override capability being for a temporary period not to exceed one normal cycle.

(6) **Portable Electric Spas**. The standby power of portable electric spas manufactured on or after January 1, 2006, shall be not greater than $5(V^{2/3})$Watts where V = the total volume, in gallons.

(h) **Plumbing Fittings.**

(1) **Tub Spout Diverters.** The leakage rate of tub spout diverters shall be not greater than the applicable values shown in Table H-2.

Table H-2
Standards for Tub Spout Diverters

Appliance	***Testing Conditions***	***Maximum Leakage Rate***
		Effective March 1, 2003
Tub spout diverters	When new	0.01 gpm
	After 15,000 cycles of diverting	0.05 gpm

(2) **Showerhead-Tub Spout Diverter Combinations.** Showerhead-tub spout diverter combinations shall meet both the standard for showerheads and the standard for tub spout diverters.

(3) **Commercial Pre-rinse Spray Valves.**

(A) The flow rate of commercial pre-rinse spray valves manufactured on or after January 1, 2006, shall be equal to or less than 1.6 gpm at 60 psi.
(B) Commercial pre-rinse spray valves manufactured on or after January 1, 2006 shall be capable of cleaning 60 plates at an average time of not more than 30 seconds per plate.

(4) **Other Plumbing Fittings**. See Section 1605.1(h) for energy efficiency standards for plumbing fittings that are federally-regulated consumer products.

(i) **Plumbing Fixtures.**

See Section 1605.1(i) for energy efficiency standards for plumbing fixtures that are federally-regulated consumer products.

(j) **Fluorescent Lamp Ballasts.**

See Section 1605.1(j) for energy efficiency standards for fluorescent lamp ballasts that are federally-regulated consumer products.

(k) **Lamps.**

(1) See Section 1605.1(k) for energy efficiency standards for federally-regulated general service fluorescent lamps that are federally-regulated incandescent reflector lamp.~~consumer products.~~

(2) **Energy Efficiency Standards for State-Regulated General Service Incandescent Lamps.**

The lamp electrical power input ~~use~~ of state-regulated general service incandescent lamps manufactured on or after the effective dates shown in Table K-3, shall be no greater than the applicable values shown in Table K-3.

Table K-3
Standards for State-Regulated General Service Incandescent Lamps

Frost or Clear		
	Maximum Power Use (watts)	
Lumens (L)	**January 1, 2006**	**January 1, 2008**
L < 340	(0.0500 * Lumens) + 21	(0.0500 * Lumens) + 21
340 ≤ L < 562	(0.0500 * Lumens) + 21	38
562 ≤ L < 610	(0.0500 * Lumens) + 21	(0.2400 * Lumens) – 97
610 ≤ L < 760	(0.0500 * Lumens) + 21	(0.0500 * Lumens) + 19
760 ≤ L < 950	(0.0500 * Lumens) + 21	57
950 ≤ L < 1013	(0.0500 * Lumens) + 21	(0.2000 * Lumens) – 133
1013 ≤ L < 1040	(0.0500 * Lumens) + 21	(0.0500 * Lumens) + 19
1040 ≤ L < 1300	(0.0500 * Lumens) + 21	71
1300 ≤ L < 1359	(0.0500 * Lumens) + 21	(0.2700 * Lumens) – 280
1359 ≤ L < 1520	(0.0500 * Lumens) + 21	(0.0500 * Lumens) + 19
1520 ≤ L < 1850	(0.0500 * Lumens) + 21	95
1850 ≤ L < 1900	(0.0500 * Lumens) + 21	(0.4200 * Lumens) - 682
L ≥ 1900	(0.0500 * Lumens) + 21	(0.0500 * Lumens) + 21

Table K-3 (Continued)
Standards for State-Regulated General Service Incandescent Lamps

Soft White		
	Maximum Power Use (watts)	
Lumens (L)	**January 1, 2006**	**January 1, 2008**

L < 310	(0.0500 * Lumens) + 22.5	(0.0500 * Lumens) + 22.5
310 ≤ L < 514	(0.0500 * Lumens) + 22.5	38
514 ≤ L < 562	(0.0500 * Lumens) + 22.5	(0.2200 * Lumens) – 75
562 ≤ L < 730	(0.0500 * Lumens) + 22.5	(0.0500 * Lumens) + 20.5
730 ≤ L < 909	(0.0500 * Lumens) + 22.5	57
909 ≤ L < 963	(0.0500 * Lumens) + 22.5	(0.2200 * Lumens) – 143
963 ≤ L < 1010	(0.0500 * Lumens) + 22.5	(0.0500 * Lumens) + 20.5
1010 ≤ L < 1250	(0.0500 * Lumens) + 22.5	71
1250 ≤ L < 1310	(0.0500 * Lumens) + 22.5	(0.2500 * Lumens) – 241.5
1310 ≤ L < 1490	(0.0500 * Lumens) + 22.5	(0.0500 * Lumens) + 20.5
1490 ≤ L < 1800	(0.0500 * Lumens) + 22.5	95
1800 ≤ L < 1850	(0.0500 * Lumens) + 22.5	(0.4000 * Lumens) – 625
L ≥ 1850	(0.0500 * Lumens) + 22.5	(0.0500 * Lumens) + 22.5

~~*Lamp Type*~~	~~*Maximum Power Use (Watts)*~~ ~~*January 1, 2006*~~
~~Full Spectrum or Enhanced Spectrum, such as Chromalux™, Reveal™, and Enrich™~~	~~No requirement~~
~~Other Frost or Clear~~	~~(0.0500 * Lumens) + 21~~
~~Other Soft White~~	~~(0.0480 * Lumens) + 23~~
~~Vibration Service Lamps~~	~~No requirement~~

(l) **Emergency Lighting.**

Energy Standards for Illuminated Exit Signs. The input power, luminance contrast, minimum luminance, average luminance and maximum to minimum luminance ratio of illuminated exit signs manufactured on or after March 1, 2003 shall meet the requirements of Table L.

Table L
Standards for Exit Signs

Standard	***Requirement***
Input power	< 5 watts per face
Luminance contrast	> 0.8
Minimum luminance	>8.6 candelas/meter^2 measured at normal (0º) and 45º viewing angles
Average luminance	> 15 candelas/meter^2 measured at normal

	(0º) and 45º viewing angles
Maximum to minimum luminance ratio	< 20:1 measured at normal (0º) and 45º viewing angles

(n) Luminaires.

(1) **Energy Efficiency Standard and Energy Design Standard for Torchieres.** Torchieres manufactured on or after March 1, 2003, shall not consume more than 190 watts and shall not be capable of operating with lamps that total more than 190 watts. Torchieres manufactured on or after January 1, 2006, shall not use more than 190 watts. A torchiere shall be deemed to use more than 190 watts if any commercially available lamp or combination of lamps can be inserted in its socket(s) and cause the torchiere to draw more than 190 watts when operated at full brightness.

(2) **Energy Efficiency Standard for-Metal Halide Luminaires.** Metal halide luminaires, manufactured on or after the effective dates shown in Table N-1, shall meet the requirements shown in Table N-1.

Table N-1
Standards for Metal Halide Luminaires

Lamp Position	***Lamp Rating***	***Effective Date***	***Requirements***
Vertical (base-up)	150-500 Watts	Jan. 1, 2006	Luminaires shall not contain a probe-start metal halide ballast.
Vertical (base-down)	150-500 Watts	Jan. 1, 2008	Luminaires shall not contain a probe-start metal halide ballast.
All	150-500 Watts	Jan. 1, 2008	Luminaires shall not contain a probe-start metal halide ballast.
All	150-500 Watts	Jan. 1, 2008	Luminaires wit metal halide lamps shall contain metal halide ballasts with a minimum ballast efficiency of 88 percent. Exceptions: 1. Luminairs that use electronic ballasts that operate at 480 volts; or 2. Luminaires that meet all of the following criteria: a. Rated only for 150 watt lamps; and b. Rated for use in wet locations as specified by the National Electrical Code 2002, Section 410.4(A); and c. Contain a ballast that is rated to operate at ambient air temperatures above 50 ^{0}C as sspecified by UL 1029-2001

Notes: Fixtures are covered if they are capable of operating lamps ~~that fall~~ within the range of included lamp wattages. ~~Vertical includes both base-up and base-down products.~~ Vertical includes products rated only for use within 15° of vertical.

(3) **Energy Efficiency Standards for Under-Cabinet Luminaires**. Under-cabinet luminaires that are equipped with T-8 fluorescent lamps and that are designed to be attached to office furniture and that are manufactured on or after January 1, 2006 shall be equipped with ballasts that have a ballast efficacy factor not less than the applicable values shown in Table N-2.

EXCEPTIONS:

1. Luminaires equipped with T-8 ballasts designed for dimming.
2. Luminaires that are:

   (a) specifically and exclusively designed for use in applications where electromagnetic interference from electronic ballasts would interfere with critical, sensitive instrumentation and equipment such as medical imaging devices; and

   (b) clearly, legibly, and permanently labeled, in at least 12 point type and in a place likely to be seen by the purchaser and the installer, "This fixture is intended exclusively for use in applications where critical, sensitive equipment would be adversely affected by electronic lamp ballast electromagnetic radiation".

Table N-2
Standards for Under-Cabinet Luminaires

Lamp Length (inches)	*Minimum Ballast Efficacy Factor (BEF) for one lamp*	*Minimum Ballast Efficacy Factor (BEF) for two lamps*
≤29	4.70	2.80
>29 and ≤35	3.95	2.30
>35 and ≤41	3.40	1.90
>41 and ≤47	3.05	1.65
>47	2.80	1.45

(o) **Dishwashers.**

See Section 1605.1(o) for energy efficiency standards for dishwashers that are federally-regulated consumer products.

(p) **Commercial Clothes Washers.**

(1) **Energy and Water Efficiency Standards for Commercial Front-Loading and Commercial Top-Loading Automatic Clothes Washers**. The modified energy factor and water factor of commercial front-loading and commercial top-loading automatic clothes washers manufactured on or after the dates indicated in Table P-4 that are not consumer products shall be not less than (modified energy factor) and not more than (water factor) the applicable values shown in Table P-4.

Table P-4
Standards for Commercial Clothes Washers

Appliance	*Clothes Container Compartment Capacity (ft^3)*	*Minimum Modified Energy Factor Effective January 1, 2005*	*Maximum Water Factor Effective January 1, 2007*
Front-loading clothes washers	< 3.5 ft^3	1.26	9.5
Top-loading clothes washers	< 1.6 ft^3	0.65	9.5
	≥ 1.6 ft^3 and < 4.0 ft^3	1.26	9.5

(2) **Energy Design Standard for Commercial Top-Loading Semi-Automatic Clothes Washers and Commercial Suds-Saving Clothes Washers**. Commercial top-loading semi-automatic clothes washers and commercial suds-saving clothes washers manufactured on or after January 1, 2005 shall have an unheated rinse water option.

(3) **Other Clothes Washers.** See Sections 1605.1(p) and 1605.2(p) for energy efficiency standards and energy design standards for clothes washers that are federally-regulated consumer products.

(q) **Clothes Dryers.**

See Section 1605.1(q) for energy efficiency standards and energy design standards for clothes dryers that are federally-regulated consumer products.

(r) **Cooking Products and Food Service Equipment.**
(s)

(1) **Energy Standards for Food Service Equipment.** There is no energy efficiency standard or energy design standard for food service equipment other than commercial hot food holding cabinets.

(2) **Energy Efficiency Standards for Commercial Hot Food Holding Cabinets.** The idle energy rate of commercial hot food holding cabinets manufactured on or after January 1, 2006 shall be no greater than 40 Watts per cubic foot of measured interior volume.

(3) **Cooking Products.** See Section 1605.1(r) for the energy design standard for cooking products that are federally-regulated consumer products.

(t) **Electric Motors.**
See Section 1605.1(s) for energy efficiency standards for electric motors that are federally-regulated commercial and industrial equipment.

(u) **Distribution Transformers.** The efficiency of all low voltage dry-type distribution transformers when tested at 35 percent of the rated output power, manufactured on or after March 1, 2003 shall be not less than the applicable values shown in Table T.

Table T
Standards for Distribution Transformers

Single Phase		***Three Phase***	
Rated Power Output kVa	***Minimum Efficiency %***	***Rated Power Output kVa***	***Minimum Efficiency %***
□ 15 < 25	97.7	□ 15 < 30	97.0
□ 25 < 37.5	98.0	□ 30 < 45	97.5
□ 37.5 < 50	98.2	□ 45 < 75	97.7
□ 50 < 75	98.3	□ 75 < 112.5	98.0
□ 75 < 100	98.5	□ 112.5 < 150	98.2
□ 100 < 167	98.6	□ 150 < 225	98.3
□ 167 < 250	98.7	□ 225 < 300	98.5
□ 250 < 333	98.8	□ 300 < 500	98.6
333	98.9	□ 500 < 750	98.7
—	—	□ 750 < 1000	98.8
—	—	1000	98.9