Arnold Schwarzenegger
Governor

CHALLENGES AND ENERGY-SAVING OPPORTUNITIES IN MEASURING, REPORTING, AND PROMOTING HIGH EFFICIENCY SECONDARY POWER SUPPLIES

PIER FINAL PROJECT REPORT

Prepared For:
California Energy Commission
Public Interest Energy Research Program

Prepared By:
Electric Power Research Institute and ECOS Consulting

September 2008
CEC-500-2008-023

Prepared By:
Electrical Research Power Institute
Knoxville, Tennessee 37901

Ecos Consulting
Portland, Oregon 97204
Commission Work Authorization No: 500-06-007

Prepared For:
Public Interest Energy Research (PIER)
California Energy Commission

Bradley Meister, Ph. D., P.E.
Contract Manager

Norm Bourassa
Program Area Lead
Building End-Use Energy Efficiency Program

Martha Krebs, Ph.D.
PIER Director

Thom Kelly, Ph.D.
Deputy Director
ENERGY RESEARCH & DEVELOPMENT DIVISION

Melissa Jones
Executive Director

DISCLAIMER

This report was prepared as the result of work sponsored by the California Energy Commission. It does not necessarily represent the views of the Energy Commission, its employees or the State of California. The Energy Commission, the State of California, its employees, contractors and subcontractors make no warrant, express or implied, and assume no legal liability for the information in this report; nor does any party represent that the uses of this information will not infringe upon privately owned rights. This report has not been approved or disapproved by the California Energy Commission nor has the California Energy Commission passed upon the accuracy or adequacy of the information in this report.

Acknowledgments

This work was funded by California Energy Commission's Public Interest Energy Research Program. The following team members contributed to the success of this project:

- Tom Geist, Electrical Research Power Institute
- Satish Rajagopalan, Electrical Research Power Institute
- Peter May-Ostendorp, Ecos Consulting
- Chris Calwell, Ecos Consulting
- Melanie Gillette, Ecos Consulting
- Laura Moorefield, Ecos Consulting

Please cite this report as follows:

Geist, Tom. 2007. *Challenges and Energy-Saving Opportunities in Measuring, Reporting, and Promoting High Efficiency Secondary Power Supplies: Findings of a California Energy Commission Sponsored Research Initiative.* Electrical Research Power Institute for the California Energy Commission, PIER Energy-Related Environmental Research Program. CEC-500-06-007.

Preface

The California Energy Commission's Public Interest Energy Research (PIER) Program supports public interest energy research and development that will help improve the quality of life in California by bringing environmentally safe, affordable, and reliable energy services and products to the marketplace.

The PIER Program conducts public interest research, development, and demonstration (RD&D) projects to benefit California.

The PIER Program strives to conduct the most promising public interest energy research by partnering with RD&D entities, including individuals, businesses, utilities, and public or private research institutions.

- PIER funding efforts are focused on the following RD&D program areas:
- Buildings End-Use Energy Efficiency
- Energy Innovations Small Grants
- Energy-Related Environmental Research
- Energy Systems Integration
- Environmentally Preferred Advanced Generation
- Industrial/Agricultural/Water End-Use Energy Efficiency
- Renewable Energy Technologies
- Transportation

Research Findings on Energy Savings in Industrial Power Supplies: Securing Key Targets and Advancing New Opportunities is the final report for the Research Findings on Energy Savings in Industrial Power Supplies: Securing Key Targets and Advancing New Opportunities project 500-06-007 conducted by Electrical Power Research Institute (EPRI) and Ecos Consulting. The information from this project contributes to PIER's Building End-Use Energy Efficiency Program.

For more information about the PIER Program, please visit the Energy Commission's website at www.energy.ca.gov/pier or contact the Energy Commission at 916-654-4878.

Table of Contents

Acknowledgements i

Preface iii

Abstract xi

Exective Summary 1

1.0 Project Description 3

1.1. Background 3

1.2. Project Objectives 3

2.0 Secondary Power Supply Technologies 5

2.1. Definition 5

2.2. Voltage Regulator Modules (VRM) and Voltage Regulator Downs (VRD) 6

2.3. Point-of-Load (POL) Converters 10

2.4. Linear Regulators 12

2.5. Upper Bounds of Linear Power Supply Efficiency 13

3.0 Examination of High Priority Electronic Products (HPEP) 15

3.1. Computers 16

3.2. LCD Computer Monitors 16

3.3. Televisions 17

3.4. Printers 17

3.5. Set-Top Boxes 17

4.0 Theoretical Efficiency of Secondary Power Supplies 19

5.0 Laboratory Measurement of Efficiency and Test Procedure Development 21

5.1. Efficiency Measurement of VRD Converters 21

5.2. Efficiency Measurement of Embedded POL Converters 25

5.3. Efficiency Measurement of VRMs and POLA/DOSA Modules 28

5.4. Efficiency Measurement of Linear Regulators 29

5.5. Challenges in Developing a Standardized Test Procedure for Secondary Power Supplies 29

5.6. Test Method Recommendations 30

6.0 Efficiency Improvement Opportunities 33

6.1. Board Copper Losses 33

6.2. More Parallel Switches 34

6.3. Next Generation Devices 34

6.4. Low Loss Inductors 34
6.5. Contact Resistance 35
6.6. Linear Regulators Versus Switching Regulators 35
6.7. Higher Phase Regulators 35
6.8. Idle Losses 35
7.0 Energy Analysis of Selected Opportunities 37
7.1. Copper Loss 37
7.2. Linear Regulators 39
7.3. Cost-Benefit Analysis 39
7.4. Manufacturers 42
7.5. Idle Losses 42
8.0 Conclusions and Energy Efficiency Policy Recommendations 45
Glossary 47
Appendix A: Measurement Results for AMD-Compatible VRD

List of Figures

Figure 1. Primary and Secondary Power Supplies in a Desktop Computer 5

Figure 2. Photo of a VRM module 6

Figure 3. Intel Motherboard with Callouts for Secondary Power Supplies 7

Figure 4. Photo Showing Location of VRD on a Motherboard 8

Figure 5. Schematic for a VRD Commonly Found on a Computer Motherboard 9

Figure 6. VRD Components on an Intel Motherboard 10

Figure 7. VRD Components on an AMD Motherboard 10

Figure 8. Embedded POL Device on Computer Motherboard 11

Figure 9. Simplified Schematics for POL Converter 12

Figure 10. Typical Linear Power Supply Circuit 12

Figure 11. Graphic Illustrating Losses in the Energy Chain Feeding a DC/DC Power Supply in a Data Center Server (Cascading Losses). 15

Figure 12. Photographs of a Partially Disassembled LCD Monitor Shown with Fluorescent Circuit Off and then On. 16

Figure 13. Thermal Image of the Disassembled LCD Monitor of Figure 12 and a Close Up with Callouts of the Main Power Supply and Ballast Circuits Used with the Monitor. 16

Figure 14. Visible and Thermal Images of the Power Supply Circuit Boards on a Large Plasma Television. 17

Figure 15. Measured Efficiency Vs. Load Curve for 3-Phase VRD on AMD Motherboard (VID Set to 1.175 V) 23

Figure 16. Measured Efficiency Vs. Load Curve for 3-Phase VRD on AMD Motherboard (VID Set to 0.8 V) 23

Figure 17. "Hot Wiring" of Micro-Pitch Control Circuit on Intel Motherboard 24

Figure 18. Measuring Embedded POL Efficiency on an AMD Motherboard 26

Figure 19. Measured Efficiency Vs. Load Current (5 V to 1.8 V Embedded POL on AMD Motherboard) 27

Figure 20. Measured Efficiency Vs. Load Current (5 V to 1.8 V Embedded POL on Intel Motherboard 27

Figure 21. Commercial VRM Test Measurement System, Chroma 29

Figure 22. Motherboard Inductor Current and Inductance 34

Figure 23. Plot of Measured Efficiency for a VRD Showing Area of Significant Opportunity at Light Loading. 36

Figure 24. PCB Board Layout Stack-Up (Source: Intel Design Guides) 38

Figure 25. Linear Regulator Using LM3853..... 40

Figure 26. Switcher Using LM2832..... 40

List of Tables

Table 1. Classification of Various Types of Power Supplies 5
Table 2. VRM Efficiency with 12 V Input 19
Table 3. POL Efficiency (Approximated from Datasheets) with 5 V Input, 1.2 V Output 19
Table 4. POL Efficiency (Approximated from Datasheets) with 5 V Input, 1.8 V Output 19
Table 5. POL Efficiency (Approximated from Datasheets) with 3.3 V Input, 1.2 V Output 20
Table 6. POL Efficiency Ranges 20
Table 7. Cost/benefit Analysis of Increasing Copper Thickness 38
Table 8. Cost Analysis of Linear Regulator Circuit Using LM3853 40
Table 9. Cost Analysis of Linear Regulator Circuit Using LM2832 41
Table 10. Cost/benefit Analysis of Linear Regulator and Switcher 41
Table 11. Measurement Results for 3-Phase VRD on AMD Motherboard (VID set to 1.175 V) ... 47
Table 12. Measurement Results for 3-phase VRD on AMD Motherboard (VID set to 0.8 V) 47
Table 13. Measurement Results for POL 1 on Intel Motherboard 48
Table 14. Measurement Results for POL 2 on Intel Motherboard 48
Table 15. Measurement Results for POL on AMD Motherboard 48

Abstract

Secondary power supplies (SPS) are direct current-direct current converters embedded within electronic systems used to convert dc electricity at one voltage into regulated dc electricity at a second voltage. They operate downstream of an electronic device's primary ac-dc power supply and are employed to develop the diverse array of voltages required by the complex electronic systems on the printed circuit board. Little is known about the total energy dissipated by these devices. They represent a diffuse but potentially very large opportunity for additional energy savings. This report attempts to determine the feasibility of creating a standardized test procedure for measuring secondary power supply efficiency, quantify the power conversion losses in these devices, and identify opportunities to improve their efficiency.

Keywords: power supplies, secondary power supplies, direct current to direct current converters, embedded power supplies, regulated direct current, energy efficiency, computer, television, monitor, SMPS, power supply, POL, VRM, VRD, HPEP

Executive Summary

Introduction

Secondary power supplies convert direct current electricity at one voltage into regulated dc electricity at a second voltage. They operate downstream of an electronic device's primary power supply and are employed to develop different voltages required by the electronic systems on the printed circuit board. Little is known about the total energy dissipated by these devices. They represent a diffuse but potentially very large opportunity for additional energy savings.

Purpose

This project completes the necessary technical investigations (i.e. understanding the components of a secondary power supply and also providing secondary power supply design improvements) for secondary power supplies that will enable identification of appropriate policy and/or research actions such as whole product efficiency.

Outcomes

Efficiency of individual secondary power supplies is difficult if not impossible to measure *in situ.* This is due to the close integration of the secondary power supplies circuit into the product, making difficult the isolation of input and output current that are necessary for an efficiency calculation.

Conclusions and Recommendations

Given the multitude of configurations for secondary power supplies and the close integration into circuits within the product, a standardized test procedure for secondary power supply products as they are designed today isn't possible. It is not possible to write a sufficiently generalized test procedure that can cover all of the potential variations in secondary power supply design. A generalized efficiency test procedure will only be possible in the future if manufacturers standardize on form factors and layouts for secondary power supplies even to the point of providing the necessary test points on the circuit board to allow the timely and non-destructive measurement of efficiency. Such standardization would require an industry-wide initiative, possibly spearheaded by a powerful industry trade association, international standards organization, or leading manufacturer.

Despite the obstacles to achieving a standardized measurement procedure for secondary power supple efficiency, this project did identify several design improvements and recommendations that will enable more efficient end products in the future:

- Reducing resistive losses in copper traces on printed circuit boards
- Increasing the number of parallel switches
- Employing next generation semiconductor devices

- Using low-loss inductors
- Reducing contact resistance
- Linear regulators versus switching regulators
- Higher phase regulators
- Decreasing idle losses

Benefits to California

This research brings into focus the make-up of secondary power supplies in California and the associated components of these devices that can be improved. It allows policy makers and utilities to determine policy and program priorities for improving the energy use of these devices largely through exploiting savings at the system level. Disseminating project findings at a variety of industry meetings, utility forums and via the project websites enables stakeholders to learn more about the research. This outreach benefits the Energy Commission, particularly when they move into policy making activities.

The results of this study demonstrate that definite opportunities currently exist to increase efficiency in secondary power source designs for key electronics and information technology products. The researchers, however, do not recommend that policy makers and efficiency advocates push for prescriptive efficiency targets for secondary power supplies. The complications of standardized testing and *in situ* verification might complicate any attempts to prescriptively address efficiency in these products. The researchers do, however, strongly suggest that the efficiency measures identified in this report be carefully considered when addressing whole product efficiency as the improvement of secondary power source efficiency can be a key strategy in reducing the overall electricity consumption and associated carbon footprint of various information technology and consumer electronics products.

1.0 Project Description

1.1. Background

In recent years, there has been extensive research to assess and compare the efficiency of alternating current-direct current (ac-dc) power supplies, the devices widely employed in electronic products that convert high-voltage ac electricity into lower voltage dc electricity that can be used by solid state electronic components. Electronic devices also contain numerous dc-dc converters - referred to in this report as secondary power supplies (SPS) - that convert dc electricity from the primary power supply into even lower dc voltages. These secondary power supplies represent a diffuse but potentially large energy savings opportunity; however, little effort has been made to examine their efficiency in a consistent way.

While many studies on the efficiency of SPS exist, the studies are poorly represented in public literature. Recent progress has been made in the electronics industry to improve the efficiency of these devices through improvements in topology, power semiconductor switch technology, and control methodology. What is currently lacking is a standard measurement approach to characterize the efficiency of the broad range of secondary power supplies used today and a credible, independently gathered dataset of secondary power supply efficiency measurements.

The researchers attempt to address these issues by determining the feasibility of a standardized secondary power supply efficiency test procedure. The study's test procedure and results allowed the researchers to quantify the efficiency of secondary power supplies in equipment such as computers, televisions, and monitors. The second phase of the researcher's work estimates the potential energy and environmental benefits of improved secondary power supply efficiency.

1.2. Project Objectives

Energy efficiency for secondary power supplies is defined as the output power divided by the input power, where power is defined as the product of the voltage and current averaged over a significant time interval. Secondary power supplies are defined as those circuits, downstream of the primary power supply, which convert dc power to one or more lower dc voltages. Given the myriad of secondary power supply topologies and implementations within the equipment of interest an attempt was made to determine the efficiency both theoretically and empirically.

The main goals of the project were to:

1. Assess the various high priority electronics products (HPEP) that contain secondary power supplies and represent large opportunities for energy savings. For the purpose of this study the HPEP were defined as computers, computer monitors (LCD based), televisions, printers, and set-top boxes.
2. Assess how secondary power supplies are configured in the HPEP chosen and obtain the necessary technical specifications on these circuits to inform how they should be measured.

3. Prepare a SPS test procedure that defines a methodology for determining the efficiency of secondary power supplies non-destructively and across a broad range of end use products.
4. Perform testing of commonly used SPS in the chosen HPEP.
5. Analyze the typical efficiencies of SPS and recommend design changes that could significantly boost that efficiency.
6. Where possible, determine the potential energy savings in identified HPEP that could be achieved if key design modifications were made.

2.0 Secondary Power Supply Technologies

2.1. Definition

Power supplies can be classified into four types according to function in terms of alternating current (ac) and direct current (dc). Given the complexity and broad scope of the power electronics industry, different classifications are used dependent upon market segment. The classifications presented in Table 1 are the author's suggestion based on experience and review of terms commonly found within the literature of the power supply industry. For those more familiar to the field the term secondary power supply is used as a general term to describe the various point of load (POL) DC/DC converters or POL converter.

Table 1. Classification of Various Types of Power Supplies

Input	Output	Classification
AC	DC (without regulation)	Rectifier
AC	DC (with regulation or current limit)	Primary Power Supply
DC	DC	Secondary Power Supply
DC	AC	Inverter

The primary power supply converts ac power to dc power for distribution within an electronic device. A secondary power supply further converts dc electricity at one voltage to a lower dc voltage for distribution to electronic components requiring more precise voltage regulation at lower voltages than the primary power supply can provide. See Figure 1.

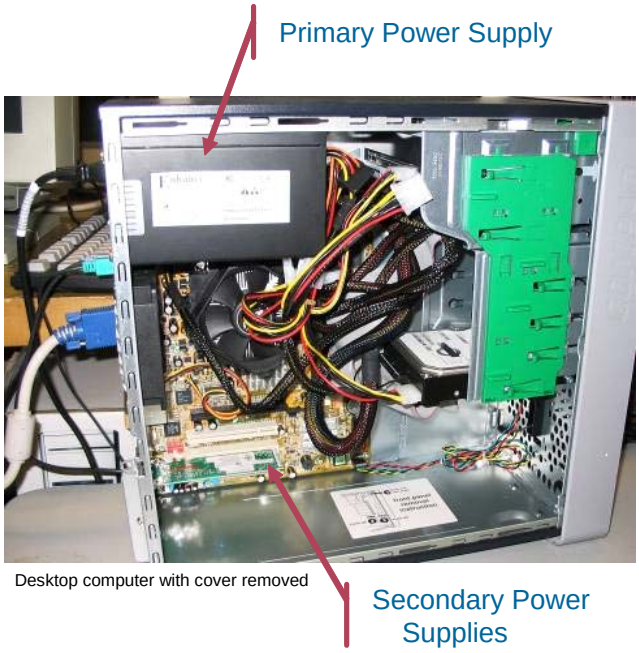

Figure 1. Primary and Secondary Power Supplies in a Desktop Computer
Source: Ecos Consulting

Secondary power supplies are scattered across motherboards and electronic control boards and in general are located close to the circuits they power. Further classification of secondary power supply designs is possible using the following terms:

- Voltage Regulator Module (VRM)
- Voltage Regulator Down (VRD)
- Point-of-Load (POL) Converter
- Linear regulators

The technologies listed above are the most common and are widely used throughout all the HPEP. There are some specialty power converters that resemble secondary power supplies, such as ballasts for LCD backlighting and motor drives for controlling printer motors. These technologies are, in general, not discussed because they are not considered power supplies. The focus of this project is strictly secondary power supplies.

2.2. Voltage Regulator Modules (VRM) and Voltage Regulator Downs (VRD)

Voltage regulator module (VRM) is the term used to describe a special variety of secondary power supply that provides power to a computer's main processor (CPU) and has a modular form factor that can be plugged into a mating socket on a printed circuit board. VRMs are sold separately as stand-alone products for integration into any design. A VRM is plugged into the motherboard using either an edge connector or solder connection, as shown in Figure 2. In general, there is a trend away from VRMs towards voltage regulator downs (VRD) as a cost saving measure in desktop computers, but these devices can still be found in some servers. VRM manufacturers include: Artesyn, Tyco, Power-One, and Volterra.

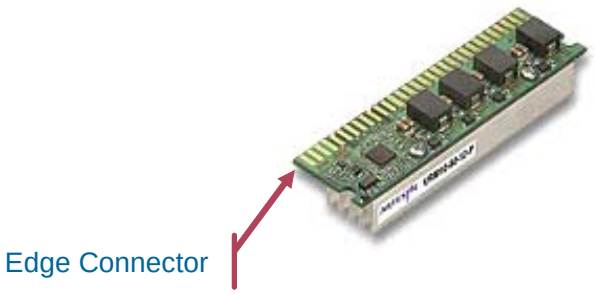

Figure 2. Photo of a VRM Module
Source: Artesyn

VRD is the term used to describe another special variety of secondary power supply that provides power to a computer's main processor (CPU). The difference between a VRD and VRM is that a VRD consists of discrete components soldered onto the printed circuit board, whereas a VRM is an all-in-one module that can easily be separated from the motherboard. This crucial difference makes VRDs more difficult to measure than VRMs because of their tighter

integration with the printed circuit board. Because each implementation of a VRD on a given motherboard layout is unique and because the VRD consists of multiple discrete components ranging from inductors to controllers, there are no true VRD manufacturers. The motherboard manufacturer could be considered the manufacturer of the VRD because they are responsible for design, component selection, and layout. In this sense, Intel, MTI, AOpen, and other motherboard manufacturers could be considered VRD manufacturers.

A typical desktop computer motherboard is shown in Figure 3 and Figure 4. From the standard ATX connector of a computer power supply, eight or more secondary power supplies can typically exist on the motherboard with approximately 85% of the motherboard power consumed by the VRM/VRD that feeds power to the processor, assuming no high-end processor or heavy CPU loads.

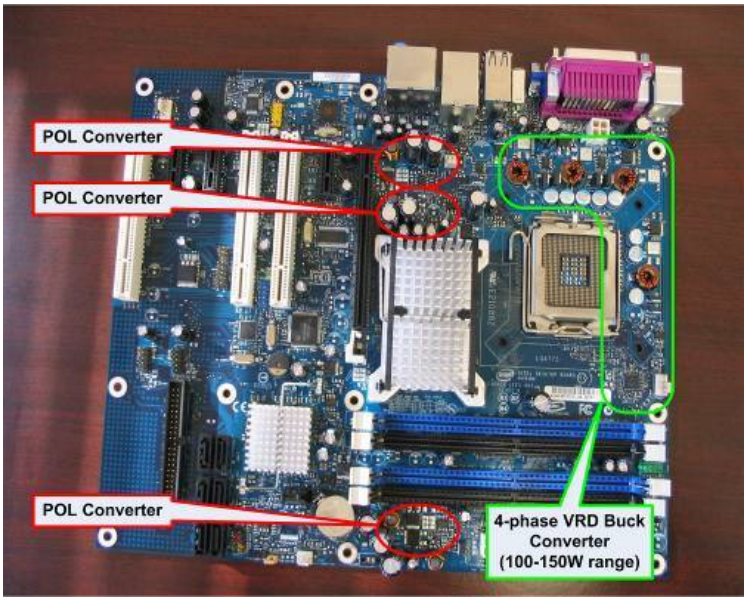

Figure 3. Intel Motherboard with Callouts for Secondary Power Supplies

Source: EPRI

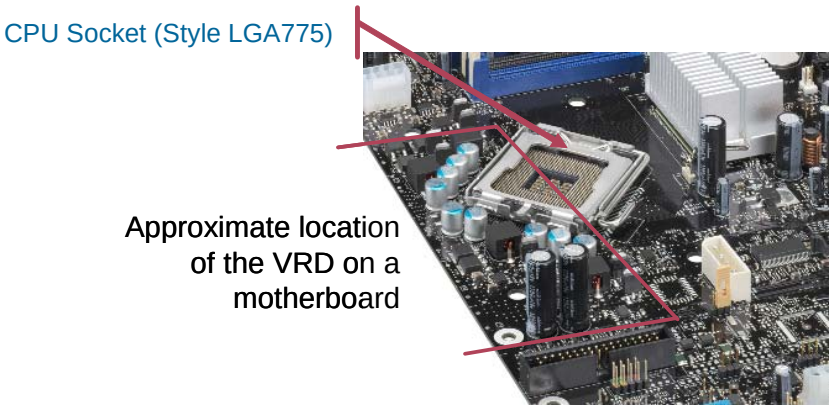

Figure 4. Photo Showing Location of VRD on a Motherboard

Source: EPRI

The reason that the VRM and VRD are explicitly called out is that they must meet more stringent performance requirements compared to other secondary power supplies on the motherboard. For example, unlike other SPS, the output voltage of a VRM/VRD is controlled by the processor that it powers and must be able to communicate with the processor using a voltage identification (VID) code. VRM/VRD requirements will vary according to the needs of different computer systems, including the range of processors a specific VRM/VRD is expected to support within a system. One design does not necessarily fit all processors.

As shown in the schematic in Figure 5 and the product photographs from Figure 6 and Figure 7, the VRD/VRM is a complex device capable of stepping down 5 V of dc electricity to a range of lower voltages used by the microprocessor (typically 1.2 V). A typical output rating for a microprocessor power supply is 1.2 V at 80 A (approximately 100 W output) to the microprocessor. A VRD consists of a controller chip to regulate the timing of power switches, a gate driver circuit to provide the proper "turn-on" and "turn-off" signals to the power switches, and the power switches themselves (Buck MOSFETs) to control the flow of current.

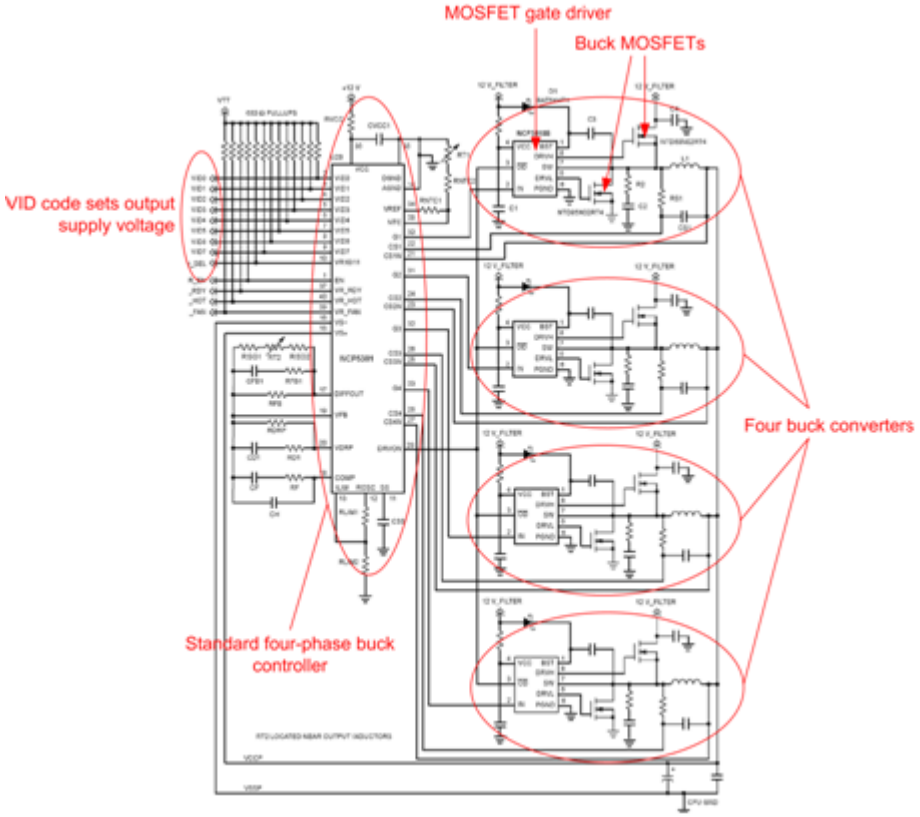

Figure 5. Schematic for a VRD Commonly Found on a Computer Motherboard
Source: EPRI

Because of the fast response time needed by the VRD four parallel power supplies are used, with each power supply (called a phase) turning on in tightly controlled sequence. This is analogous to pistons in a car engine. While one piston fires, the other are in various stages of the

combustion cycle. The pistons serve to smooth out the flow of power to the drive train. Within a multi-phase VRD, the same is true with the timing of the individual phases sequenced to smooth the flow of power to the microprocessor and improve the speed of response.

Note in Figure 7 the control lines from the controller that connect to the microprocessor in the upper left hand corner of the diagram. These lines deliver a digital signal called the voltage identification (VID) code, allowing the microprocessor to set the output voltage based on the needs of the processor at any given time. Use of the VID avoids the use of jumpers that were prevalent in the 1990s. The VID code also allows the microprocessor to control the voltage as a function of time to optimize the performance and energy consumption of the processor. When the processor is not heavily taxed, it can tell the VRD to lower its voltage to scale back power and performance. When heavy processing is required, the processor can similarly tell the VRD to boost its voltage, increasing power and performance.

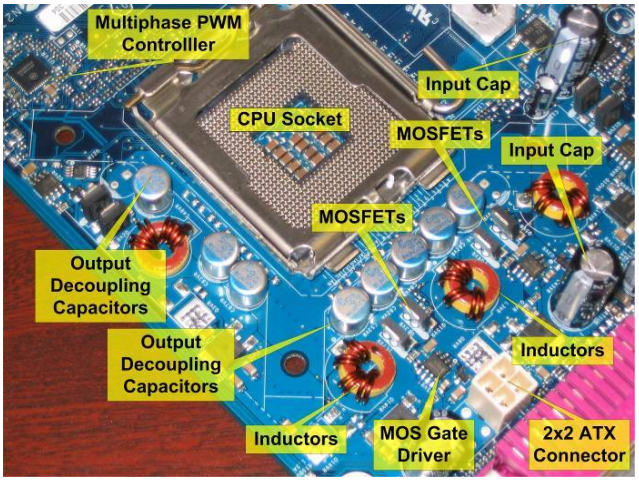

Figure 6. VRD Components on an Intel Motherboard
Source: EPRI

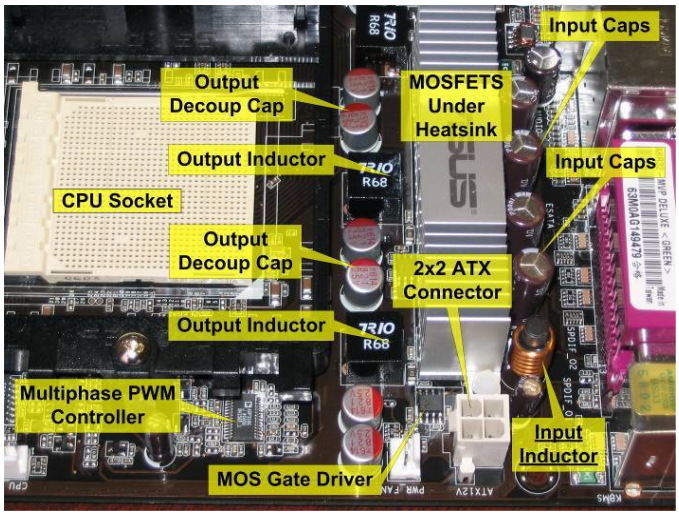

Figure 7. VRD Components on an AMD Motherboard
Source: EPRI

2.3. Point-of-Load (POL) Converters

A Point of Load Converter, or POL for short, is the term used to describe a secondary power supply that provides power to circuits on the motherboard other than the CPU, such as memory. Like a VRM/VRD a POL converter can either have a module form or can be embedded on the printed circuit board. The embedded configuration, shown in Figure 8, is more common. A POL is often, but not necessarily, a low power device (less than 20 W). Some typical POL voltage conversions include:

- 12 V in – 5 V out
- 5 V in – 3.3 V out
- 3.3 V in – 0.8 V out

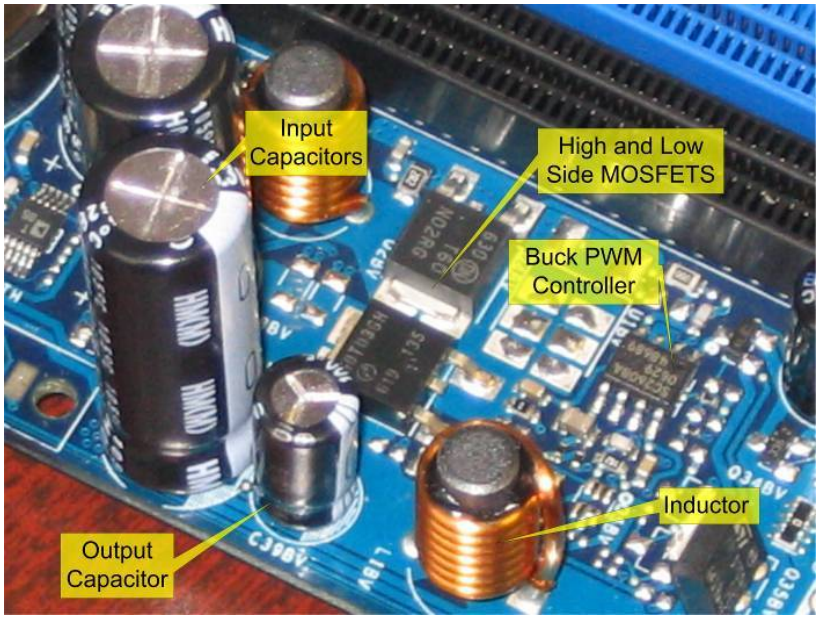

Figure 8. Embedded POL Device on Computer Motherboard
Source: EPRI

Non-embedded designs or modules are influenced by two popular industry standards:

1. POLA[1] (Point-of-Load Alliance), whose members include: Texas Instruments, Artesyn, Astec, Ericsson AB, Murata
2. DOSA[2] (Distributed-power Open Standards Alliance), whose members include: SynQor, Artesyn, Tyco, Delta, Lambda

1. More information available at: http://www.polagroup.com/
2. More information available at: http://www.dosapower.com/

POL converters are often termed as POLA or DOSA converters depending on the adherence of the design to the standards maintained by the industry alliances above. Non-standard POL converters also exist. However, the purpose of the standard is to allow manufacturers to have a second source that is pin-compatible and based on leading technology.

POL converters come in a variety of configurations or topologies, shown in Figure 9. Embedded POL converters are typically small (<100 W) dc/dc converters that may be completely integrated (one large integrated circuit) or assembled from discrete parts. A photograph with callouts of an embedded POL converter for computer memory is shown in Figure 9.

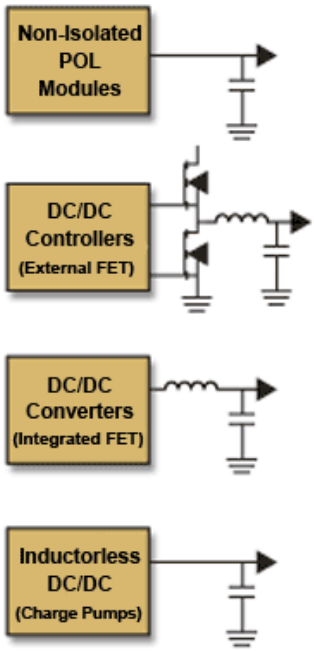

Figure 9. Simplified Schematics for POL Converter
Source: Texas Instruments

2.4. Linear Regulators

The linear supply is most often used with low-cost, low power consumer products. These linear power supplies, in their most elementary form, step down ac voltage with a transformer, rectify the ac voltage into dc, and convert the resulting unregulated dc voltage to a lower regulated dc voltage. A simplified schematic diagram of a linear supply is shown in

Figure 10. Although the input transformer can be very efficient, the majority of the losses are in the linear regulator. The current remains relatively constant through the regulator, so the difference in voltage between the output of the transformer and the load is simply "thrown away" as heat. Consequently, the overall linear power supply is inherently inefficient, typically 45% for a 5 V design.

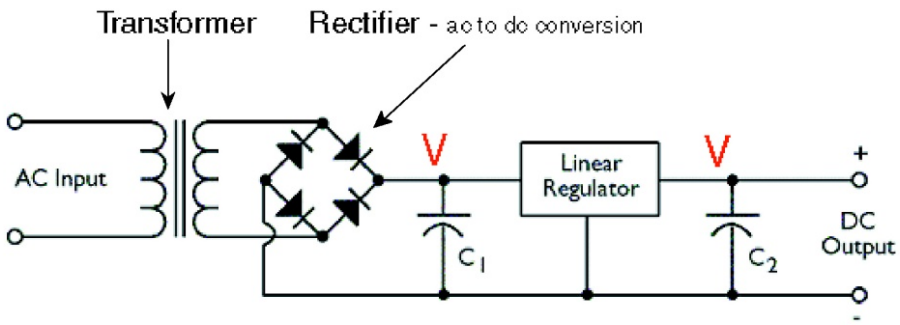

Figure 10. Typical Linear Power Supply Circuit
Source: EPRI

Some of these linear designs are unregulated, which means they do not produce a precise output voltage under varying input voltage conditions.[3] As a result, products (e.g. cordless phones) that use unregulated power supplies, but require regulated voltage must place a regulator in the housing of the product, rather than in the housing of the power supply. Likewise, many inexpensive cordless tools are charged by ac-ac power supplies, with rectification occurring at the end of the process in the charger base. In both cases, the efficiency of the entire power conversion chain remains low, even if the power supply itself appears fairly efficient when tested at its output terminals.

2.5. Upper Bounds of Linear Power Supply Efficiency

While simplicity and low cost are all attractive advantages of the linear power supply, the maximum achievable efficiency is limited by the fact that the difference between the voltage input to the regulator (rectified dc, V_{in}) and the dc voltage out of the regulator (V_{out}) results in voltage drop across the linear regulator. The power loss within the regulator is the product of the voltage drop and current flow. In general, the efficiency of a linear power supply cannot be higher than the ratio of V_{out}/V_{in}.

So, why not make the linear power supply more efficient by choosing an input transformer that results in V_{in} as close as possible to V_{out}? In theory, this can be done. However, in practice the variation in voltage supplied by the utility must be taken into account. For the linear regulator to work, the voltage from the utility must not drop below a certain minimum level. To achieve very low manufacturing costs and safeguard against improper operation with reduced voltage, manufacturers trade efficiency for functionality.

Given the inherent efficiency limitations with the linear power supply design, efforts to improve the efficiency of linear power supplies through use of better magnetic material for the input transformer, lower loss diodes, or more efficient packaging all meet with limited results. Additionally, for application with output powers greater than 30 W, the transformer cost

3. Most switched-mode supplies have regulated output. Although, for sensitive circuitry, the voltage sometimes needs to pass through another regulator, usually found within the housing of product itself.

becomes prohibitively expensive. The good news is that switched-mode power supplies remove these constraints and open the door to high efficiency.

3.0 Examination of High Priority Electronic Products (HPEP)

Based on previous research conducted by EPRI and Ecos for the California Energy Commission, the researchers determined some of the top electronic products in which secondary power supply efficiency improvements could result in large energy savings. Electronic products suspected to contain secondary power supplies (e.g. those products with a large number of microprocessor devices) that also have large overall energy consumption were targeted for study. Even small efficiency changes in the secondary power supplies embedded in these high priority electronic products (HPEP) could have large upstream energy ramifications. This is because the secondary power supply is a downstream electronic component and any power savings obtained so low on the "power food chain" will be magnified by other power conversion losses further upstream.

Take for example a data center server which contains a secondary power supply in the form of a voltage regulator module (VRM) to provide regulated power to the microprocessor, as shown in Figure 11. Although the server's SPS might only consume 50 to 80 watts of power itself, its power passes through a large number of other power conversion devices, including the primary or "silver box" power supply and the uninterruptible power supply, each with their own power conversion losses. Saving a watt at the secondary power supply saves an additional 0.3 to 0.5 watts in upstream devices because less power passes through them.

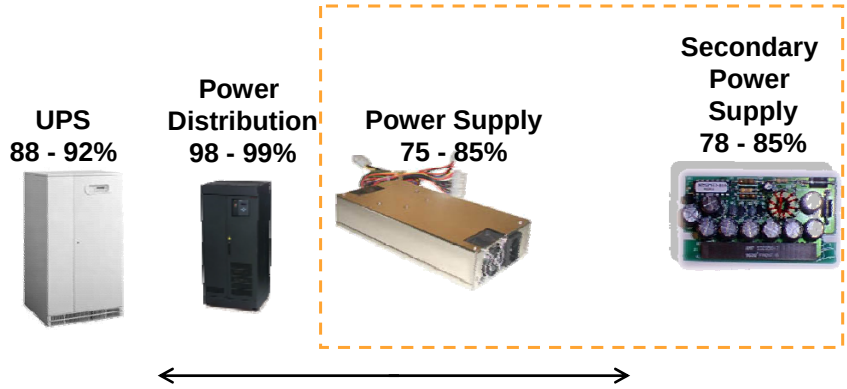

Figure 11. Graphic Illustrating Losses in the Energy Chain Feeding a DC/DC Power Supply in a Data Center Server (Cascading Losses).
Source: Ecos Consulting

The researchers identified five HPEPs to examine the way that secondary power supplies were implemented in those products. These products are:

- Computers
- LCD computer monitors
- Televisions
- Printers

- Set-top boxes

3.1. Computers

In computers, the SPS is almost always found on the motherboard. The largest and most important SPS on the computer is the VRD or the VRM, through which a significant amount of the motherboard power flows. Besides the VRD/VRM, researchers also found several POLs on the motherboard. The primary role of these POLs is to provide power to memory devices on the motherboard. Several linear regulators (1-5 W range) can also be found. These small linears support auxiliary circuits on the motherboard.

3.2. LCD Computer Monitors

Within a typical LCD monitor the light source for the display is a cold cathode compact fluorescent bulb placed both at the top and bottom of the screen. The light radiates into a plastic panel that serves as a light pipe to evenly distribute the light across the face of the screen. The principal power supplies in a LCD monitor are the ballast circuits to drive the CFL lamps. In LCD monitors with an LED-backlit display, the ballasts are replaced by LED driver circuits. An example of a CFL ballast in a LCD monitor is shown in Figure 12.

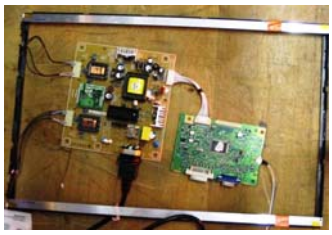

Visible image of monitor frame and circuit boards with **CCFLs Off.**

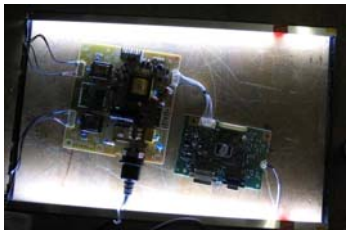

Visible light image of monitor frame and circuit boards with **CCFLs On**.

*CCFL –
Cold Cathode Compact Fluorescent

Figure 12. Photographs of a Partially Disassembled LCD Monitor Shown with Fluorescent Circuit Off and then On.
Source: Ecos Consulting

Infrared (thermal) image of monitor frame and circuit boards (**CCFLs On**)

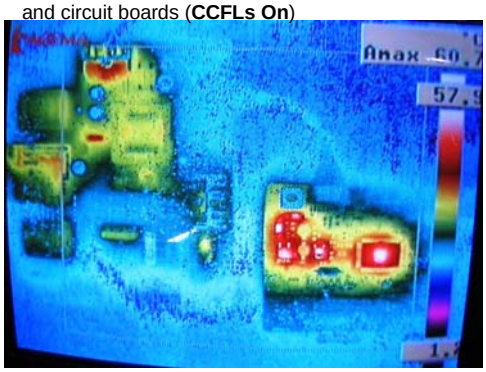

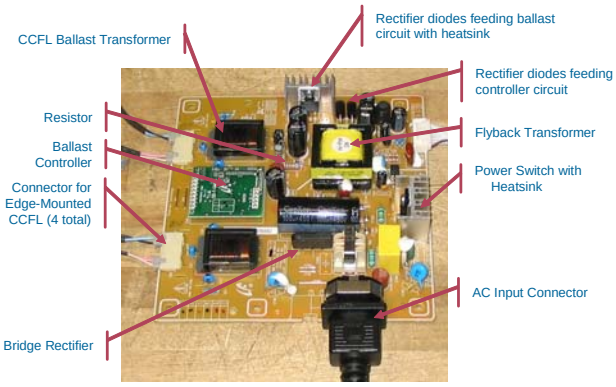

Figure 13. Thermal Image of the Disassembled LCD Monitor of Figure 12 and a Close Up with Callouts of the Main Power Supply and Ballast Circuits Used with the Monitor.
Source: Ecos Consulting

3.3. Televisions

Television power supplies are usually ballasts to drive the CRT screen or the plasma cells. These DC-AC converters are high voltage power supplies (>600 V). An example of this power supply is shown in Figure 14, in both visible (left) and infrared (right) forms. The red and white areas in the infrared image show portions of the circuit board and ballast where a large amount of heat is being generated. Where there is heat, there is wasted electricity and the potential to improve efficiency.

Visible Image

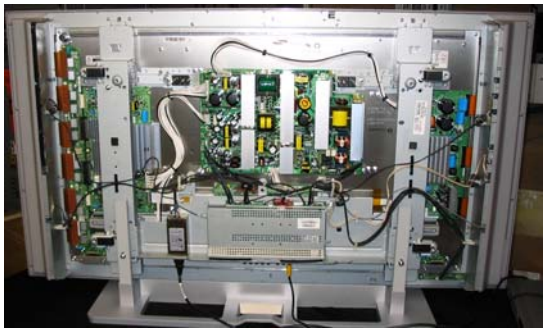

Infrared (Thermal) Image

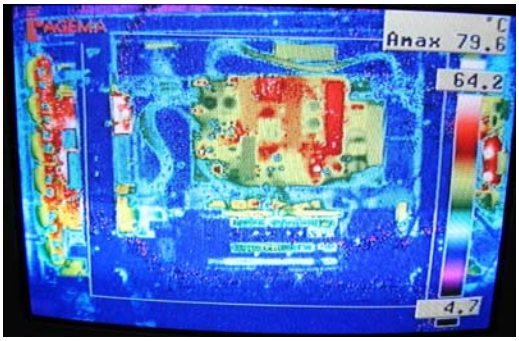

Figure 14. Visible and Thermal Images of the Power Supply Circuit Boards on a Large Plasma Television.

Source: Ecos Consulting

3.4. Printers

Printer power supplies are usually comprised of small POLs for the memory. The largest power conversion device on a printer is the dc-dc converter used to drive the dc stepper motors on the printer, but these would not be considered secondary power supplies under the scope used in this report. The typical overall power consumption of a small household printer is about 30 W.

3.5. Set-Top Boxes

SPS in a conventional set-top box typically comprise mainly linear regulators. Most of the linears found are in the 1 to 5 W range. As set-top boxes advance and continue to incorporate more computer-like functionality, it is possible that they will also begin to include computer-like SPS such as VRDs.

4.0 Theoretical Efficiency of Secondary Power Supplies

Energy efficiency for secondary power supplies is defined as the output power divided by the input power; where power is defined as the product of the voltage and current over a significant time interval.

Measured data on the efficiency of SPS is difficult to come by because most SPS are not available as stand-alone, measurable products, but are instead embedded on a printed circuit board. Available literature from manufacturers suggests that the efficiency of modular SPS, such as VRMs and modular POL converters, is in the range of 80% to 85% under most operating conditions (see Tables 2 through 5).

Table 2. VRM Efficiency with 12 V Input[4]

VRM Part Number	VRM Specification	Number of Buck phases	Per phase switching frequency (KHz)	Output Voltage (V)	Output Current (A)	Efficiency at 25% Load	Efficiency at 100% Load
VRM10-85	VRM 10.0/10.1	4	550	0.8375 - 1.6	85	85.5	86.5
VRM64	AMD64	5	830	0.8 - 1.55	80	n/a	84

Source: Artesyn

Table 3. POL Efficiency Load (Approximated from Datasheets) with 5 V Input, 1.2 V Output

Manufacturer	Efficiency (%)	
	50%	100%
Manufacturer A	89	83
Manufacturer B	88	86
Manufacturer C	88	80
Manufacturer D	90	84
Manufacturer E	88	87
Manufacturer F	91	88

Source: Artesyn

Table 4. POL Efficiency Load (Approximated from Datasheets) with 5 V Input, 1.8 V Output

Manufacturer	Efficiency (%)	
	50%	100%
Manufacturer A	90	86
Manufacturer B	93	90
Manufacturer C	92	88
Manufacturer D	92	88
Manufacturer E	93	92
Manufacturer F	91	88

Source: Artesyn

4. Datasheets available at http://www.artesyn.com

Table 5. POL Efficiency Load (Approximated from Datasheets) with 3.3 V Input, 1.2 V Output

Manufacturer	Efficiency (%)	
	50%	100%
Manufacturer A	92	88
Manufacturer B	93	90
Manufacturer C	92	89
Manufacturer D	93	88
Manufacturer E	94	92
Manufacturer F	95	92

Source: Artesyn

In general, efficiency decreases as the SPS step-down voltage increases (Table 6). For example, 12 V in/5 V out converters are more efficient than 12 V in/1.2 V out.

Table 6. POL Efficiency Ranges

Efficiency Range (%)	Input Voltage (V)	Output Voltage (V)
> 90%	12	5/3.3
	5	3.3/2.5
	3.3	1.2
75% - 89%	12	1.2/1.0/0.8
	5	1.2

Source: Ecos Consulting

All linear regulators require an input voltage at least some minimum amount higher than the desired output voltage. That minimum amount is called the *drop-out voltage*. For example, a common regulator such as the 7805 has an output voltage of 5V, but can only maintain this if the input voltage remains above about 7V. Its drop-out voltage is therefore 7V - 5V = 2V. When the supply voltage is less than about 2V above the desired output voltage, as is the case in low-voltage microprocessor power supplies, so-called *low dropout regulators* (LDOs) are used. This voltage drop results in poor regulator efficiency. In the above example, the efficiency of the regulator is (5*I / 7*I)*100% = 71.4%. The current I, remains the same as it directly flows from the input to the output through the active device.

5.0 Laboratory Measurement of Efficiency and Test Procedure Development

The first step researchers took in developing a test procedure was to finalize a measurement system and methodology that could be universally applied. The biggest challenge in measurement of SPS efficiency was the wide diversity of SPS designs that can be implemented in any given electronic product. As the VRM/VRDs and POLs are the most common variety, a number of methods have been evaluated to measure the efficiencies of these devices. Each method carries its own drawbacks and the conclusions of this effort will summarize the lessons researchers learned.

5.1. Efficiency Measurement of VRD Converters

VRDs are now the dominant secondary power supply technology used to provide power to microprocessors on computer motherboards, supplanting VRMs in most applications. As such, this project focused its effort on developing standard methods for measuring VRD efficiency rather than the less popular VRM. The project examined motherboards for both Intel and AMD processors and measured the VRD efficiencies found on both boards. Even though VRDs are highly integrated into motherboards and comprise a number of discrete components, it is possible to measure efficiency using typical laboratory equipment with a custom test fixture. A brute force method for measurement of VRD efficiency was developed, but the method is necessarily "destructive" in nature in that it involves modifying the motherboard. A step-by-step procedure that was used to measure the efficiency of VRDs on computer motherboards is presented as follows:

1. The VRD arrangement on a motherboard is studied. The number of phases of the converter is noted.
2. Part numbers for MOSFETs, diodes, the pulse-width modulation controller and other components of the VRD design are noted.
3. The VRD topology is determined based on the datasheet of the controller and a visual inspection of the motherboard.
4. The key steps in measurement of VRD efficiency are as follows:
    - Operation of VRD in a standalone mode with an artificial CPU load.
    - Determination of input power to the VRD.
    - Determination of output power of the VRD measured at the load point.
5. As a first step, the VRD must be operational. The PWM controller on the VRD typically has five or six dedicated pins called voltage identification (VID) pins that set the output voltage. A nominal test output voltage is decided, usually in the middle of the range of voltage outputs that can be supplied by the VRD. The test output voltage is set by configuring the appropriate VID pins according to manufacturer specifications. The VID

binary code for the selected output voltage can be obtained from the controller datasheet.

6. An electronically controlled load is connected across the microprocessor socket.

7. Efficiency of the VRD can be calculated by using:

$$\eta = \frac{\sum_i P_{o,i}}{\sum P_{in}} \times 100, \quad \textbf{(1)}$$

where $P_{o,i}$ is the output power of the ith output. The input power (P_{in}), unless otherwise specified, includes all housekeeping and auxiliary circuits required for the converter to operate, including any integrated cooling fans.

8. The first and one of the most difficult steps is measurement of input power. In most motherboards the input ATX 2X2 connector feeds several power supplies simultaneously with the VRD being one of them. Two "universally applicable" approaches were tried to measure secondary power supply efficiency. Some secondary power supplies have input inductors. In such cases, the input current can be sensed using a current transducer. In secondary power supplies without an input inductor, a method of segregation of load is used. With the targeted load switched off; the current to other loads is measured off the primary power supply's output rail. The targeted load is then turned on, and the current to the other loads measured previously is subtracted analytically. This enables an estimation of the input current and hence the input power.

9. The ATX 2X2 current is measured. The miscellaneous load current that was measured separately with VRD turned off is subtracted from the ATX current to measure the input current, I_{in}.

10. The input voltage, V_{in}, is sensed using a voltage probe.

11. A current sensor is positioned at the electronic load and the output current, I_{out}, is sensed.

12. The output voltage, V_{out}, is measured using voltage probes.

13. The electronic load is varied in steps from no load to full load with 5 A increments in the load current and the four parameters, I_{in}, V_{in}, I_{out}, and V_{out} are recorded.

14. The efficiency is then calculated using

$$\eta = \frac{I_{out} V_{out}}{I_{in} V_{in}} \times 100, \quad \textbf{(2)}$$

15. Steps 5 through 14 are repeated at the extremes of the voltage ranges that can be supplied by the VRD. VID codes must be adjusted accordingly to set the VRD to the appropriate output voltage.

The measured efficiency results for two output voltage scenarios (the maximum and minimum output voltages for this motherboard's particular VRD design) on an AMD motherboard are presented in Figure 15 and Figure 16. For detailed tables of the efficiency results obtained from this motherboard and examples of the variables that were recorded in order to characterize the efficiency of the VRD, please see the appendix.

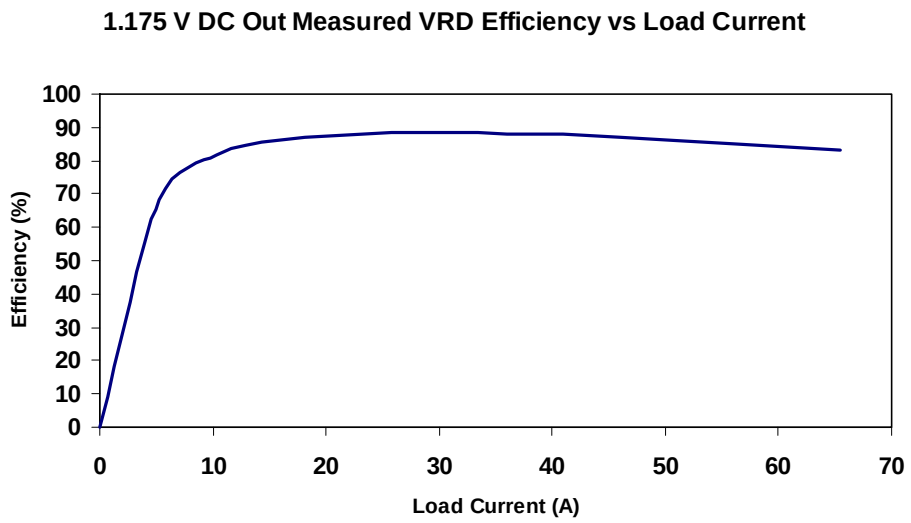

Figure 15. Measured Efficiency vs. Load Curve for 3-Phase VRD on AMD Motherboard (VID set to 1.175 V)
Source: Ecos Consulting

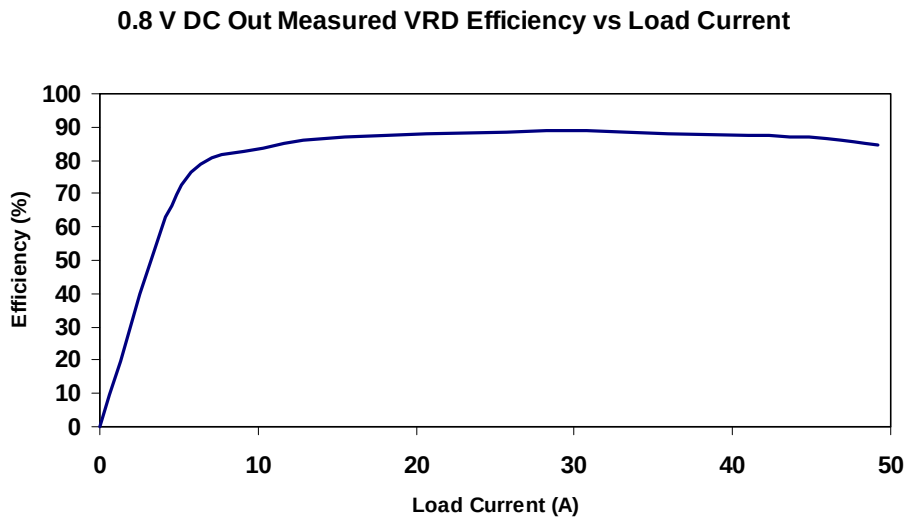

Figure 16. Measured Efficiency Vs. Load Curve for 3-Phase VRD on AMD Motherboard (VID set to 0.8 V)
Source: Ecos Consulting

It can be seen from the measured results that while the maximum efficiency is close to 89%, efficiency starts falling steeply at low loads (typically 10%).

5.1.1. Summary of Challenges in Measuring VRD Efficiency

- Almost every motherboard has a different VRD layout, different number of phases, and different pulse-width modulation controllers. This makes development of common test instrumentation extremely difficult because there is no way to attach test leads to the SPS without first examining its design in detail.
- Measurement of input power into each secondary power supply is difficult without damaging printed circuit boards as the input dc voltage rail simultaneously supplies several secondary power supplies, not just the VRD.
- Similarly, measuring output power is very difficult as the secondary power supply is embedded alongside other electronics and can be difficult to isolate non-destructively.
- Lack of access to the input and output points of the secondary power supply make measurement more difficult.
- Some VRDs do not have dedicated inductors. In such cases, only an approximate estimation of input current is possible by subtracting other known sources of current draw from the measurement as described above.
- Some controller chips used in VRDs have an extremely small footprint. Making manual modifications and connections at the VID pins almost impossible. An attempt was made to do these modifications on a motherboard with such a device using precision soldering equipment and a high magnification microscope. Figure 17 shows such a "hotwiring" of VID pins being attempted on an Intel motherboard with a fine-pitch controller chip. This illustrates the difficulty involved in such modifications.
- Output power must be measured right at the socket using specialized equipment. There are several kinds of sockets depending on chip manufacturers.
- The electronic loads used to test VRDs can be very expensive. These pieces of equipment are usually developed in small quantities for computer processor manufacturers and are often specific to a given line of processors from the manufacturer. Different test fixtures must be purchased to load different processors, adding to the expense.

Test Bench

“Hotwiring” of micro-pitch control circuits.

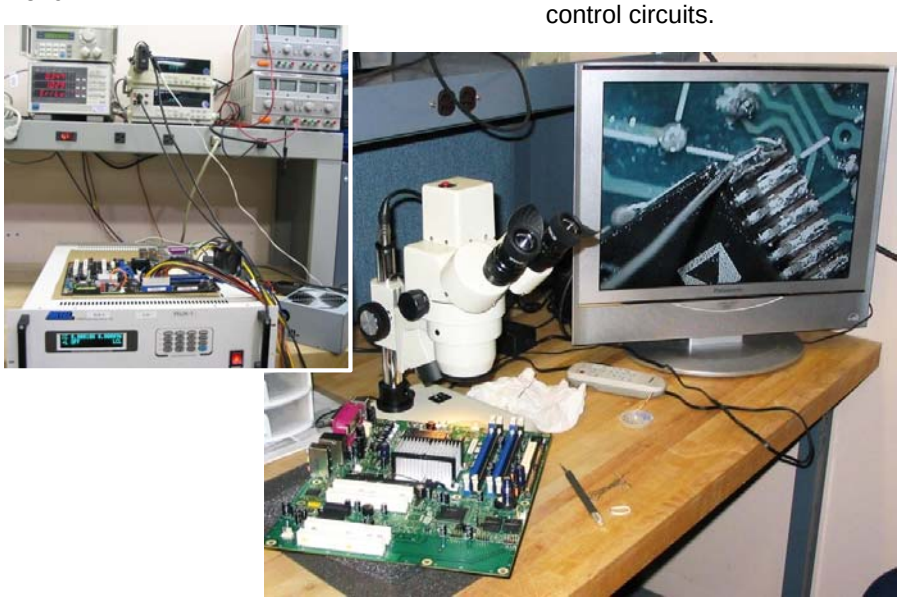

Figure 17. “Hot wiring” of Micro-Pitch Control Circuit on Intel Motherboard

Source: Ecos Consulting

5.2. Efficiency Measurement of Embedded POL Converters

Most POLs in electronic products are embedded. These POLs can be found widely in computer motherboards, set-top boxes, and other consumer electronic products. A step-by-step procedure was developed similar to the one used to measure the efficiency of VRDs on computer motherboards:

1. The POL arrangement on a motherboard is studied. A rough determination of the topology is made.
2. Part numbers for MOSFETs, diodes, and most importantly the pulse-width modulation controller are noted.
3. The POL topology is derived based on the datasheet of the controller chip and a visual inspection of the motherboard.
4. The key steps in measurement of POL efficiency are as follows:
    - Operation of POL in a standalone mode with artificial load (that resembles memory/graphic cards, for example)
    - Determination of input power at POL
    - Determination of output power of the POL measured at the load point
5. As a first step, the POL must be operational. The PWM controller on the POL is usually fairly simple and needs no modification. Some PWM controllers may have an enable

pin. In this case, this pin must be enabled by manually hot-wiring the controller. The output voltage of the POLs is usually fixed and hence no voltage setup is required.

6. An electronically controlled load is connected at the POL output.

7. Efficiency of the POL can be calculated by using

$$\eta = \frac{\sum_i P_{o,i}}{\sum P_{in}} \times 100, \quad \textbf{(3)}$$

where $P_{o,i}$ is the output power of the ith output. The input power (P_{in}), unless otherwise specified, includes all housekeeping and auxiliary circuits required for the converter to operate, including any integrated cooling fans.

8. As in the case of a VRD, the first and one of the most difficult steps is measurement of input power. In most computer motherboards the POL is supplied by the 20/24-pin external power supply connector that brings in the 5/3.3V buses. Connections may vary in other consumer electronics. Again, as in the case of a VRD, two "universally applicable" approaches were tried to measure secondary power supply efficiency. Some secondary power supplies have input inductors. In such cases, the input current can be sensed using a current transducer. In secondary power supplies without an input inductor, a method of segregation of load is used. With the targeted load switched off; the current to other loads is measured off the primary power supply's output rail. The targeted load is then turned on, and the current to the other loads measured previously is subtracted analytically. This enables an estimation of the input current and hence the input power.

9. Even though a POL may have a dedicated input inductor, these components are embedded (soldered onto the printed circuit board) and the only way a current sensor can be positioned to measure the current through this inductor is to physically lift the inductor from the board and insert the sensor. (Note: this approach was used in the present experiment to measure the input current, I_{in}. However, in one such experiment, the inductor was damaged during the sensor insertion process (Figure 18), highlighting the extreme difficulty of this method of measurement).

10. The input voltage, V_{in}, is sensed using a voltage probe.

11. A current sensor is positioned at the electronic load and the output current, I_{out}, is sensed.

12. The output voltage, V_{out}, is again measured using voltage probes.

13. The electronic load is varied in discrete steps from no load to full load in fixed increments of the load current and the four parameters, I_{in}, V_{in}, I_{out}, and V_{out} were recorded.

14. The efficiency is then calculated using

$$\eta = \frac{I_{out} V_{out}}{I_{in} V_{in}} \times 100, \quad (4)$$

The measured efficiency results for the two cases are presented in Figure 19 and Figure 20. It can be seen from the measured results that while the maximum efficiency is close to 92%, efficiency starts falling steeply at low loads.

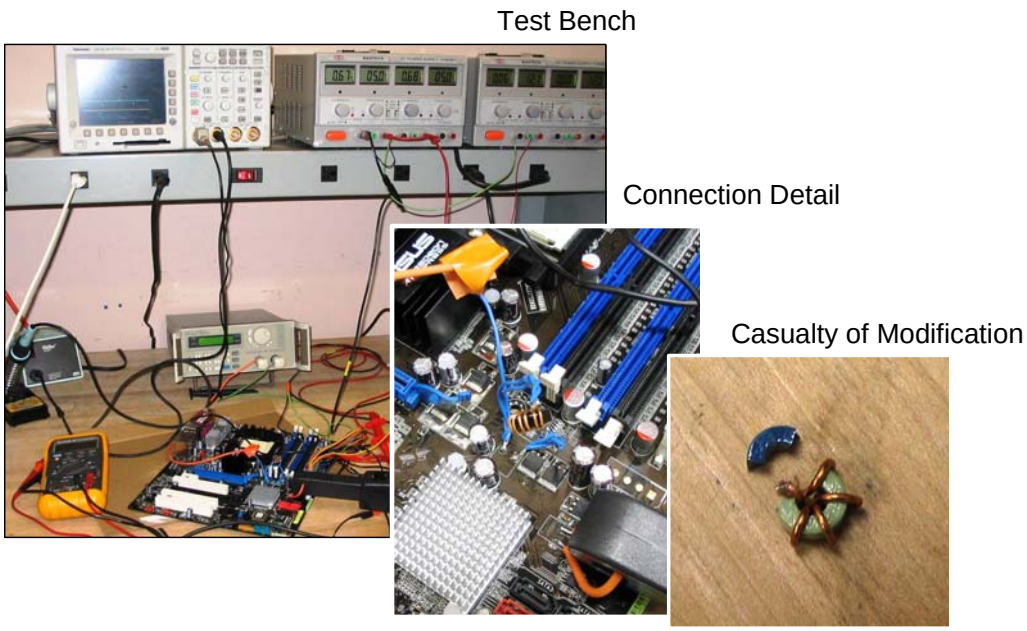

Figure 18. Measuring Embedded POL Efficiency on an AMD Motherboard

Source: Ecos Consulting

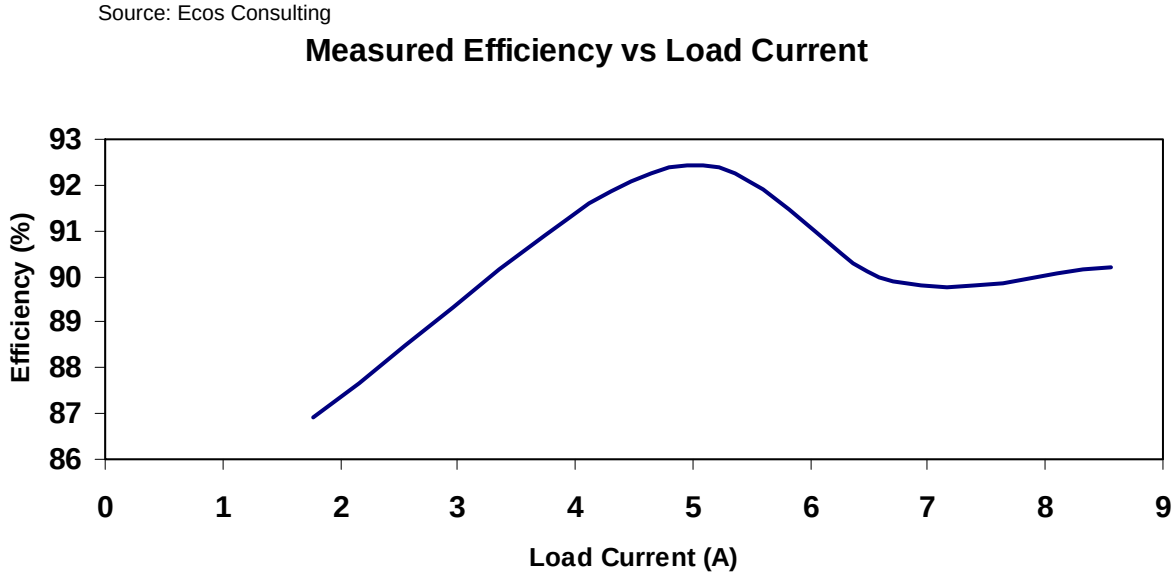

Figure 19. Measured Efficiency Vs. Load Current (5 V to 1.8 V Embedded POL on AMD Motherboard)

Source: Ecos Consulting

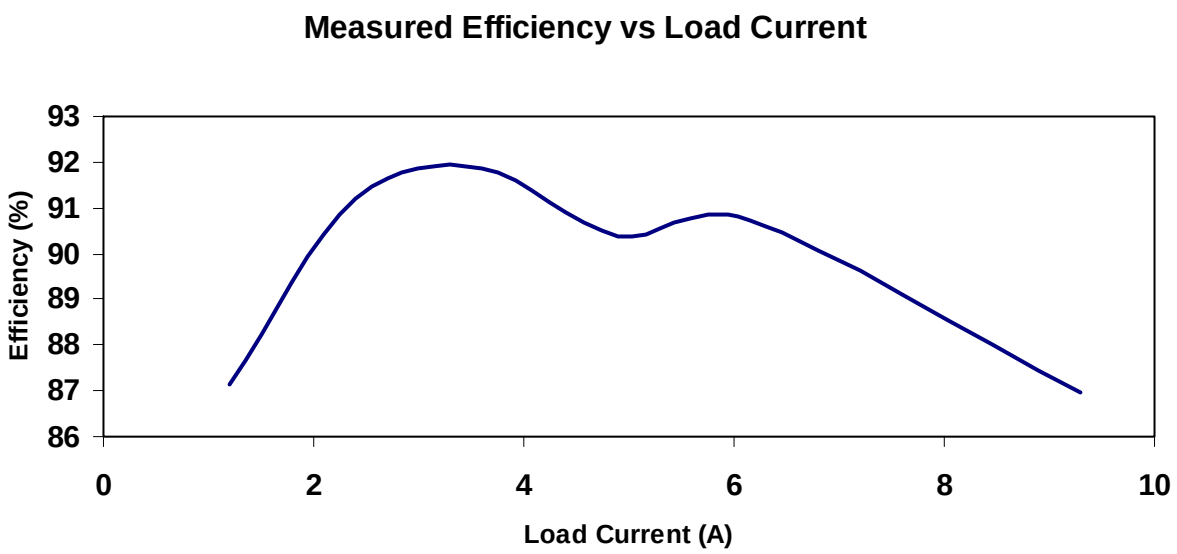

Figure 20. Measured Efficiency Vs. Load Current (5 V to 1.8 V Embedded POL on Intel Motherboard)

Source: Ecos Consulting

5.2.1. Summary of Challenges in Measuring Embedded POL Efficiency

- POL topologies can vary widely.
- Perhaps, the most important limitation to the development of a common test procedure is that the every POL is arranged differently on a motherboard, as the designer's goal is to minimize floor space.
- Measurement of input power into each secondary power supply is difficult without damaging printed circuit boards, as the input dc voltage rail simultaneously supplies several secondary power supplies.
- Even with the presence of an input inductor, insertion of a current sensor is difficult. In one such experiment, the inductor was damaged during the sensor insertion process (Figure 18).
- Similarly, measuring output power is very difficult as the secondary power supply is embedded alongside other electronics and can be difficult to isolate non-destructively.
- Lack of access to the input and output points of the secondary power supply make measurement more difficult.
- Some POLs do not have dedicated inductors. In such cases, only an estimation of input current is possible using the analytical methods outlined above in step 8.
- Some controllers' chips have an extremely small footprint, making manual modifications at the controller pins almost impossible.

- Output power must be measured right at the electronic load socket using specialized equipment that can interface with the socket. There are several kinds of sockets depending on the device powered by the secondary power supply (e.g. memory) and the manufacturer of that device.

5.3. Efficiency Measurement of VRMs and POLA/DOSA Modules

VRMs are mostly used in servers and hence were not considered for testing as part of this research. Similarly, POLA/DOSA modules are also used predominantly in telecom equipment, which was also considered beyond the purview of this project. However, efficiency testing of these converters definitely merits a brief discussion.

1. VRMs and POLA/DOSA converters are modular, which could make them easier to test.
2. These converters have standardized pin outs and hence generalized test measurement similar to external power supplies is possible.
3. For VRMs, commercial equipment is available to precisely measure input power, output power, and efficiency. Chroma is one such piece of equipment (Figure 21). Even though this type of equipment has been co-developed with individual chip makers and hence is applicable to processors of only certain manufacturers, modification of the equipment to make a generalized test measurement system is not difficult. Similar systems can be designed for POLA/DOSA converters.

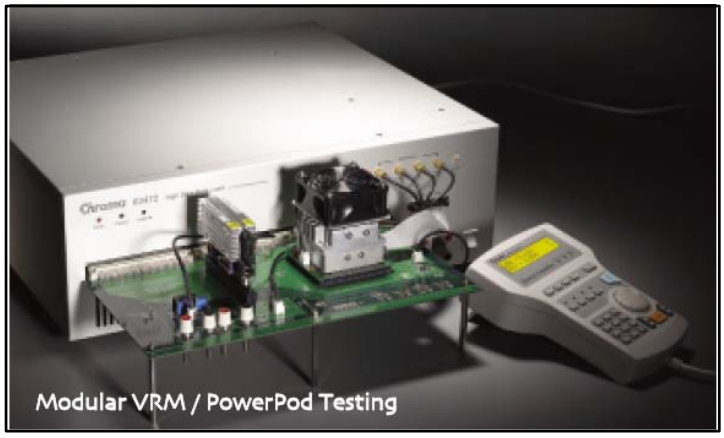

Figure 21. Commercial VRM Test Measurement System, Chroma

Source: Ecos Consulting

5.4. Efficiency Measurement of Linear Regulators

Almost every motherboard has linear regulators. These small converters are widely distributed on motherboards and vary from 2 to 5 W. Experimental measurement of efficiency of these converters is almost impossible for the following reasons:

1. Linear regulators are single-chip solutions that are embedded on the board.

2. These converters have a very small footprint and are usually surface mount components with almost no room for sensors.
3. While these converters are standardized and readily available, stand-alone testing is almost impossible due to the numerous varieties available and the low power ranges involved.

While experimental measurements are extremely difficult, if not impossible, for these types of devices, their efficiency can be estimated very accurately from first principles and through manufacturer datasheets.

5.5. Challenges in Developing a Standardized Test Procedure for Secondary Power Supplies

Based on the extensive testing done in the laboratory, it can be concluded that development of a generalized test procedure for secondary power supply efficiency is neither practicable nor advisable at this time. Subsequently, high volume measurements of these devices are extremely difficult due to the time-consuming nature of individual, customized tests. Below the researchers summarized the challenges that currently prevent the development of such a test procedure:

- There are a large number of SPS types, each with different topologies. Some examples include VRD, VRM, POLs, and linear regulators.
- Many of these converters are embedded among other electronics on a printed circuit board. This makes identification and isolation of converters difficult for testing.
- In embedded converters, such as VRDs and POLs, no dedicated input path may be present for sensing the input current to the SPS. Some converters have input inductors that can be isolated to facilitate current measurements, but in most cases any dedicated trace feeding current into the SPS is hidden inside the layers of the printed circuit board. This makes any access for measurements essentially impossible.
- Even in converters with input inductors, these inductors have to be physically removed in order to insert current sensors, and this may result in destruction of the component or damage to the circuit board.
- Modifications that may need to be made to the converter for testing may affect the efficiency results.
- Output power must be measured exactly at the point of load. This load is often embedded (e.g. microprocessors, memory chips, and graphics controllers) and access is difficult.
- As the converter has to be tested as a stand-alone component of a larger system, substantial manual modification is needed to the controller chips to allow the SPS to function properly. This operation is very difficult, because most ICs are migrating to finer pitches for pin separation and, thus, are becoming smaller.

- Certain secondary power supplies have control mechanisms that are intricately tied to the device that they power. For example, a VRD on a computer motherboard that provides power to the microprocessor requires communication signals from the microprocessor to instruct the VRD on how much voltage to provide.
- Secondary power supplies are implemented in several ways even within a given end use category such as computers or televisions. The number of design implementations simply depends on the creativity of the end product manufacturer. For example, every computer motherboard is different in its layout and connector shapes. Thus development of a common test method and accompanying instrumentation becomes difficult.

5.6. Test Method Recommendations

It must be emphasized that development of a test procedure is *difficult* at present, but not *impossible*. A generalized test method may be possible if the following conditions are met, largely through collaboration with industry members for certain key end use products like computers:

- Coordinate with computer, motherboard, and component manufacturers to agree on standardized board layouts for secondary power supply implementation. Such efforts should clearly identify the location of the SPS and standardize the layout of the SPS.
- Such standardization would have to be pursued separately for all SPS categories. The standardized layout for a VRD would differ from the layout for an embedded POL converter. Because many secondary power supply types (like VRDs) are specific to an end use product (like a computer), OEMs of key HPEP end use products would need to participate heavily in the development of such standards to ensure that new layouts do not constrain the design of their products.
- In addition to more standardized SPS layouts, circuit boards must have provisions built in during design to facilitate efficiency measurements and provide easy access to key test points. This will eliminate the need for invasive and destructive modifications to the printed circuit board. Specifically this entails including test points for measurement of voltage and current in both input and output paths.

6.0 Efficiency Improvement Opportunities

The results of this study show that many common secondary power supplies, such as VRDs and POLs, use a relatively efficient switch-mode power supply topology, but there is still room for improvement. If close attention is paid to all of the parasitic losses in existing SPS designs, additional points of efficiency could be gained. Given that secondary power supplies are at the end of a long chain of power conversion, small improvements at the SPS can translate into large savings at the grid level. Below the researchers detailed specific recommendations, followed by an energy analysis of certain quantifiable opportunities.

6.1. Board Copper Losses

Copper losses on the motherboard are one of the biggest contributors to overall losses in devices with secondary power supplies. These losses are essentially I^2R losses that arise due to the finite resistance of the copper traces and planes. Copper on the motherboard is present in the form of connecting traces as well as large ground planes. Board manufacturers have always tended to use less copper on the board due to the rising prices of copper. This has resulted in the use of thinner, high resistance traces and ground planes resulting in more board losses. This area presents itself as a significant opportunity to improve efficiency. Increase in copper thickness on the board can directly decrease I^2R losses.

Besides increasing copper thickness, widening copper planes is another way of decreasing resistance to flow of current. This directly follows from the basic equation of resistance cited in equation 5:

$$R = \frac{\rho l}{A} \qquad \textbf{(1)}$$

R : Resistance of copper trace (ohms)

ρ : Resistivity of copper (ohm-m)

l : Length of copper trace (m)

A : Area of copper trace (m^2)

Equation 5 shows that as the area, A, increases (widens), the resistance decreases. As a consequence of this, there is a proportionate decrease in resistive losses. However, this is difficult to quantitatively evaluate as the meaning of widening the copper trace includes:

- Minimizing split planes
- Minimizing holes in planes
- Widening plane to the maximum possible.

All the above are dependent on the designer and the actual size and number of components of the motherboard.

6.2. More Parallel Switches

Most motherboard POLs carry large amounts of current, which contributes significantly to I^2R conduction losses in the switching elements (usually MOSFETs) used in POLs. This loss can be decreased by designing POLs with a greater number of parallel MOSFETs. The resulting decrease in current through multiple MOSFETs - due to the fact that parallel MOSFETs will share the overall current traveling through the POL- decreases the losses directly proportional to the square of the current.

For example, assume that each MOSFET has resistance of R and the current through the POL is I. If one MOSFET is used, the losses are I^2R. However, if two MOSFETs are used, the loss is $2*(I^2/4)*R = I^2/2$. Thus, the use of two parallel MOSFETs cuts device conduction losses in half.

6.3. Next Generation Devices

Newer devices have much smaller loss profiles. Examples are new generation MOSFETS with very small gate charge and on state resistance. This directly results in decreased switching, gate drive, and conduction losses. Similarly, new PWM controllers have improved and increasingly sophisticated control algorithms built in that can help save energy. These new controllers allow better current sharing among multiple phases and optimize the switching of gate drives, all leading to more efficient SPS operation. It is strongly recommended that manufacturers try to use the latest generation MOSFETs and controllers in their designs.

6.4. Low Loss Inductors

Typically the inductor used in conventional motherboards is a toroid wound on an iron core. These inductors are lossy and possess two loss components: copper loss (I^2R losses) in the inductor winding and core loss in the inductor core.

Copper losses are typically caused by the I^2R drop in the windings. Low resistance windings can be achieved by using flat winding instead of the traditional circular magnetic wire. A typical current/inductance characteristic of these inductors is shown in Figure 22.

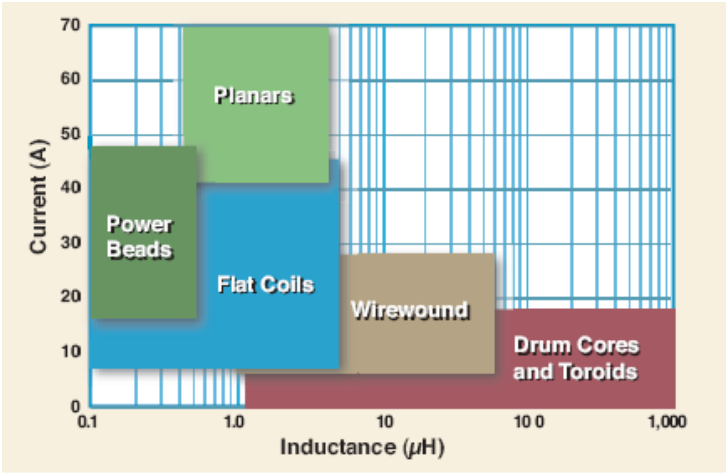

Figure 22. Motherboard Inductor Current and Inductance

Source: Ecos Consulting

Several possibilities for providing low core loss at high frequencies have been recommended by Intel. Two such examples provided are powder cores (e.g., Kool-Mμ* from Magnetics, Inc. or Micrometals) and gapped soft ferrite cores (e.g., 3F3 or 3F4 from Philips). It is also recommended that low frequency powdered iron cores be avoided due to their high core loss, especially when the inductor value is relatively low and the ripple current is high. The use of new ferrite core material instead of the traditional powdered iron core may reduce core losses by as much as 25%.

Both technologies mentioned above are incorporated in laptop motherboards and some so-called "mobile-on-desktop" motherboards that incorporate laptop technology in a desktop form factor. Widespread use of these technologies in desktop motherboards could yield large energy savings.[5]

Sometimes, paralleling of inductors may also help in reducing I^2R losses as decreased current through the inductors decreases the I^2R losses directly proportional to square of the current.

6.5. Contact Resistance

Connector/socket contact resistance is another contributor to I^2R losses. These losses are more difficult to address. Significant research is ongoing in packaging and material sciences to design new contact material that has lower resistance and thereby lower losses.

6.6. Linear Regulators Versus Switching Regulators

Almost all electronic boards have linear regulators ranging from 1 to 5 W. While these linears represent small power leads, they are used widely in almost every product. Linear regulators are very inefficient with efficiencies ranging from 50% to 60%. Small switch mode power supplies with efficiencies greater than 90% are now widely available as a substitute for these linears.

6.7. Higher Phase Regulators

Higher number of phases in high current design such as for the microprocessor results in decreased current per phase and thereby reduces switching and conduction losses. This is very similar to the energy saving opportunity that can be obtained by designing SPS with more parallel MOSFETs. For example, one manufacturer has demonstrated that increasing the number of phases from 4 to 5 in a 130W VRM can decrease losses by almost 20%. Similarly, it has been demonstrated that use of 7 phases in some design could decrease losses by 11% when compared to a 5-phase converter and by almost 29% when compared to a 4-phase converter.

6.8. Idle Losses

While most of the SPS operate at full load efficiencies greater than 80%, the partial load efficiencies are much lower presenting some opportunities for improvement, as shown in

5. P May-Ostendorp and N Beck. "How Low Can We Go? Cutting Edge Efficiency in Today's Desktop Computers." January 18, 2008. Available at: http://www.efficientproducts.org/computers/

Figure 23. Computers, for example, operate in idle mode for most of the time they are turned on, meaning that their primary power supplies typically operate at 20% to 30% of full load. Because VRDs control the flow of power to the microprocessor, they also operate at partial load a majority of the time as well. Improvement in efficiency in this zone is possible by using techniques to reduce switching frequencies in idle states and utilizing techniques to decreases gate drive losses which are a significant component of low load losses.

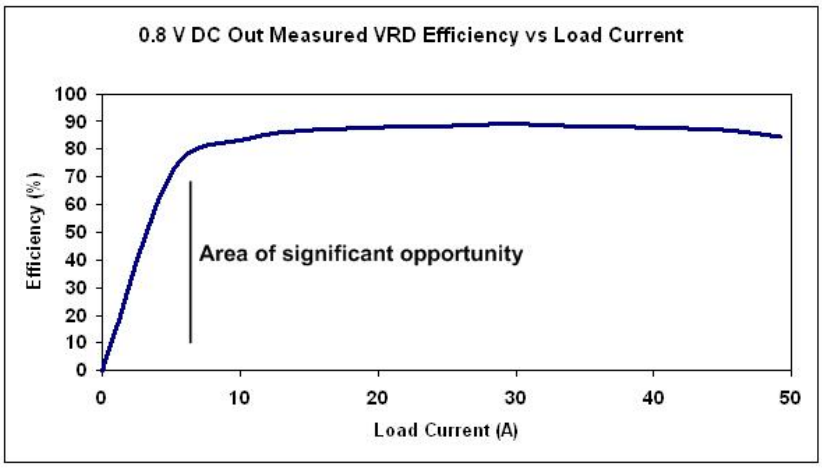

Figure 23. Plot of Measured Efficiency for a VRD Showing Area of Significant Opportunity at Light Loading.

Source: Ecos Consulting

7.0 Energy Analysis of Selected Opportunities

Using best available measurement data and knowledge of secondary power supply design, the researchers evaluated the incremental cost and energy/environmental benefits of the following secondary power supply efficiency improvements:

1. Copper loss
2. Linear regulator
3. Voltage Regulator Module
4. Idle Losses

7.1. Copper Loss

To demonstrate efficiency improvements possible by optimizing copper dimensions, a 12 x 12 inches motherboard containing four layers (top, bottom, and two internal layers) is assumed. The VRD is estimated to consume a board space of 4 x 4 inches. Assuming a load current of 40A flowing through each plane (two Vcc planes carrying a total of 80 A and two ground planes returning the 80 A) during times of processor activity,

Table **7** shows the difference in power loss caused due to I^2R losses on a single copper plane. This current represents normal loading conditions. The nominal copper thickness is obtained from Intel guidelines [8]. The copper loss in

Table 7 is calculated using

$$\textbf{Initial copper loss} = I^2 R_{ic}, \quad (2)$$

$$\textbf{New copper loss} = I^2 R_{nc}, \quad (3)$$

where I is the current flowing through each plane (40A), R_{ic} and R_{nc} are the resistances of the initial and increased copper 12 x 12 planes.

Most boards typically assume 0.5 oz/ft2 of copper. Figure 24 shows an extract of a typical motherboard PCB cross-structure from Intel design guidelines.

Table 7 uses this as a bench mark to project the copper loss decrease due to increased and decreased amounts of copper.

While the power loss calculation is done for a board cross section of 4″ x 4″, the copper price calculation is done assuming that the entire board plane thickness would be increased, as is practically the case.

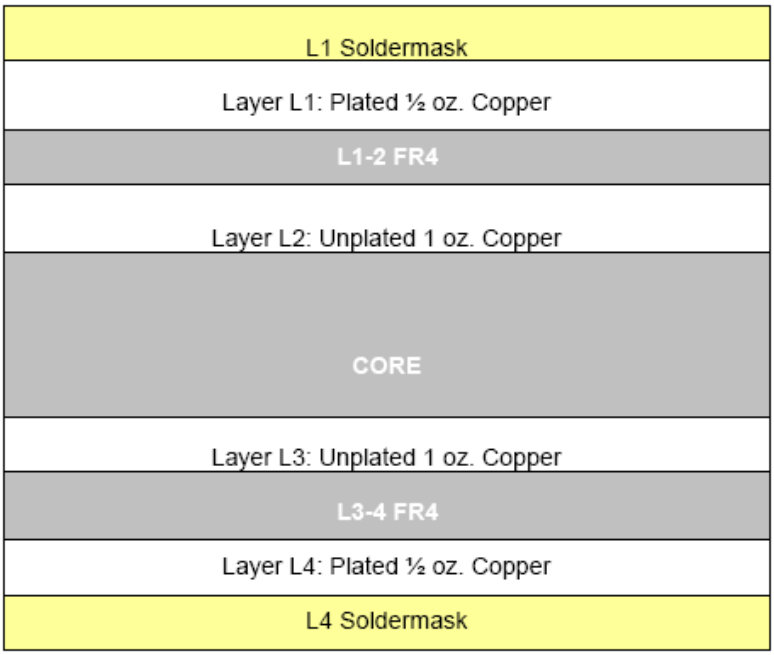

Figure 24. PCB Board Layout Stack-up (Source: Intel Design Guides)

Source: Ecos Consulting

Table 7. Cost/benefit Analysis of Increasing Copper Thickness

Layer	Initial copper thickness oz/ft^2	Increased copper thickness oz/ft^2	Initial copper loss W	New copper loss W	Power savings W	Increase in copper cost $
Outer (Top)	0.5	1.5	1.55	0. 52	1.03	0.22
Inner 1	1.0	1.5	0.78	0.52	0.26	0.11
Inner 2	1.0	1.5	0.78	0.52	0.26	0.11
Outer (Bottom)	0.5	1.5	1.55	0.52	1.03	0.22
Total dc Power			**4.65**	**2.08**	**2.57**	**0.66**

Source: Ecos Consulting

(Complete motherboard thickness on all planes increased to 1.5 oz/ft2; Copper Price as per COMEX: $3.52/lb)

Table 7 shows that up to 55% (2.08*100/4.65) of copper loss could be prevented at an increased bill of materials cost of $0.66. This translates into a 2.5 W dc power savings on the computer motherboard or an additional 3.2 W of ac power. A typical desktop computer might actually draw this level of peak current for one to two hours per day, resulting in an annual energy

savings of 2 to 3 kWh. Although desktop computers spend significantly more time in Idle Mode, the current during this mode is too small to contribute to any significant copper losses. Server and workstation computers might spend a much larger portion of their overall duty cycle in this peak current state due to the higher utilization of their processors. For a server that is effectively utilized 100% of the time, the annual energy savings opportunity for thicker copper traces looks much more promising, on the order of 28 kWh per year. It must be pointed out this is an approximate calculation and more accurate projections can be made by the motherboard PCB manufacturers for their specific designs.

7.2. Linear Regulators

Several linear regulators are found on motherboards ranging from 1 to 5 W. Most of the linear regulators are notoriously inefficient, with efficiencies in the 60% to 70% range. For example, take a 1 A linear regulator with 5 V input and a 3.3 V output. The input and output current of a linear regulator are the same, in this case, 1 A.

The efficiency of this linear regulator is

$$\eta = \frac{P_{out}}{P_{in}} = \frac{V_{out} I_{out}}{V_{in} I_{in}} 100 = \frac{3.3x1}{5x1} 100 = 66\% \quad \textbf{(4)}$$

Linear regulators can be replaced by high efficiency synchronous buck converters called "switchers". Efficiency figures for switchers often quoted by manufacturers in their datasheets typically exceed 95 % and can result in significant power savings. While the linear regulator is a single-chip component, a switcher circuit consists of several sub-circuits: PWM controller/MOSFET, inductor, input, and output capacitors. The linears are fixed regulators and usually operate at their full load. As these linear regulators are always drawing a small amount of power, and since there are so many of them, the total power quickly adds up. Most electronic equipment has about 2 to 5 linear regulators consuming a total power of 3 to 10 W.

7.3. Cost-benefit Analysis

To perform a cost-benefit analysis, the researchers considered two circuits that step down 5V to 3.3V:

- Linear Regulator: National Semiconductor LM3853-3.3
- Switcher: National Semiconductor LM2832Y

The above circuits are designed using National Semiconductor's online design tool. The linear regulator circuit using an LM3853-3.3 is shown in Figure 25 and Table 8 shows a cost analysis for all the components involved in this circuit.

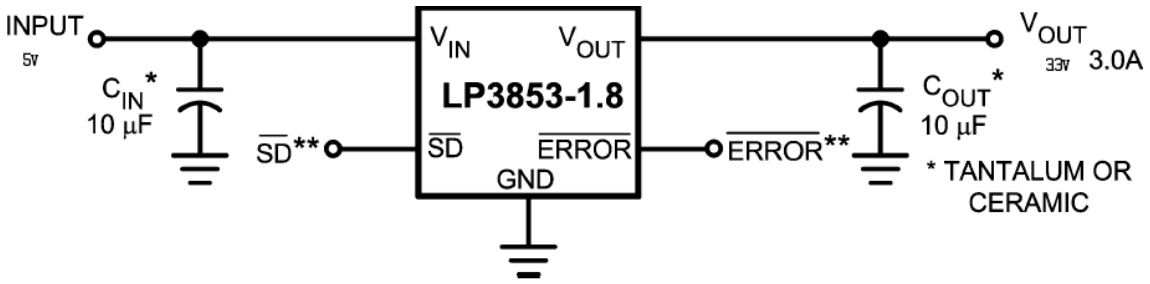

Figure 25. Linear Regulator Using LM3853

Source: Ecos Consulting

Table 8. Cost Analysis of Linear Regulator Circuit Using LM3853

Component	Cost $/unit (in quantities of 1000)
LM3853	2.83
Capacitor (CIN)	0.08
Capacitor (COUT)	0.08
Total	**2.99**

Source: Ecos Consulting

The switcher based circuit is shown in Figure 26 and the cost analysis is provided in

Table 9 .

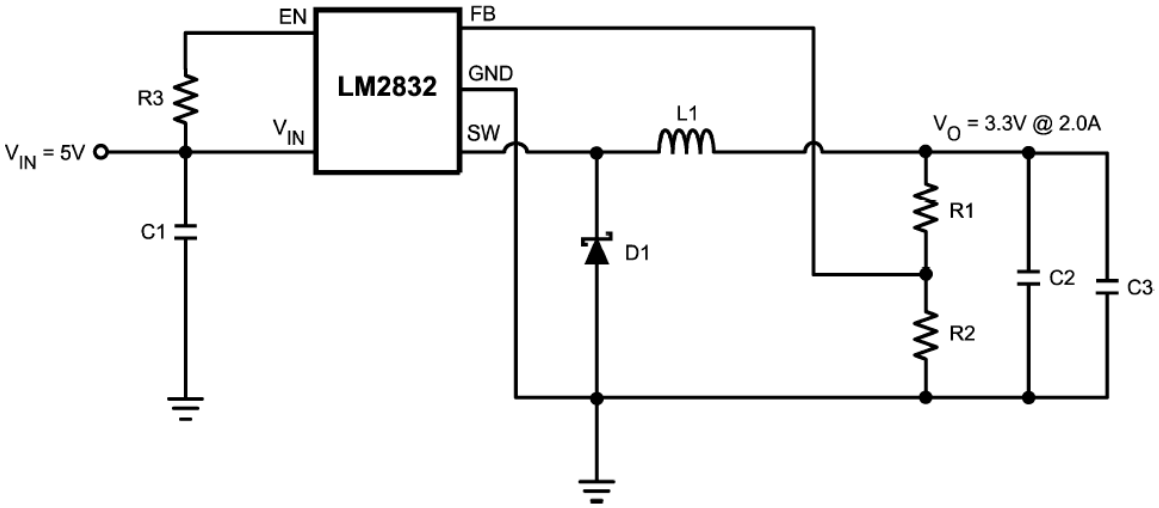

Figure 26. Switcher Using LM2832

Source: Ecos Consulting

Table 9. Cost Analysis of Linear Regulator Circuit Using LM2832

Component	Cost $/unit (in quantities of 1000)
LM2832	1.99
Capacitor (C1)	0.29
Capacitor (C2)	0.29
Capacitor (C3)	0.29
Resistor (R1)	0.09
Resistor (R2)	0.09
Resistor (R3)	0.09
Inductor (L1)	0.38
Diode (D1)	0.26
Total	**3.77**

Source: Ecos Consulting

A comparison of the two circuits is presented in Table 10. The efficiency figures are provided by the National Semiconductor online tool.

Table 10. Cost/benefit Analysis of Linear Regulator and Switcher

Parameter	Linear Regulator	Switcher
Cost	$2.99	$3.77
Component count	3	9
Efficiency	66%	95%

Source: Ecos Consulting

Table 10 shows that a significant improvement in efficiency is possible when replacing a linear with a switcher. The cost however increases by 26% and the component count is threefold.

On average one would expect to find two to five linear regulators in a given HPEP product, such as a computer or a set top box. It is reasonable to assume that all linear regulators could be replaced with higher efficiency switch mode dc-dc regulators. Linear regulators, like all secondary power supplies, exist downstream of primary ac-dc power supplies, so any savings produced by replacing linear power supplies will cascade up the power conversion chain and produce slightly larger power savings at the ac wall plug. Given that many of today's electronics use a switch mode primary power supply, the ac savings will be 10% to 25% larger than the dc. The power dissipated in each linear regulator could be reduced by about 30%,

translating into 0.2 to 0.5 W of dc power savings per linear regulator. These savings would further cascade up the power conversion chain, resulting in 0.25 to 0.63 W of ac power savings per linear regulator. HPEP devices may have as many as 5 linear regulators on their motherboards. If all of these were replaced the per-device savings could be as high as 3 W per HPEP.

As these linears are expected to be operating whenever a product is turned on, researchers can look toward products with a very large active mode duty cycle to find the largest HPEP energy savings opportunities. Set-top boxes, for example, effectively run 24 hours per day as they are currently designed. Replacing the linear regulators in these products could yield about 26 kWh of energy savings. A family's main TV can operate up to 8 hours per day in some households. Replacing the linear regulators in a TV could save up to 9 kWh per year per TV.

7.4. Manufacturers

Switchers are manufactured by following manufacturers:

- National Semiconductor
- Maxim IC
- Linear Technologies

7.5. Idle Losses

Motherboards usually operate at 5% to 10% load for most parts of their operational time. The measured results show that a typical motherboard VRD consumes about 5 A of current at 10% load. The efficiency of the VRD at this operating point is quite bad, usually around 50% to 70%; however, VRDs can operate at 85% peak efficiencies when appropriately loaded. VRD and motherboard designers can use phase shedding techniques to ensure that VRDs operate as close to this peak efficiency as possible, resulting in some significant reductions in power consumption. Based on the measurement results, assume that the motherboard operates at approximately 10% load, i.e. 5.2 A of load current (from Table 1 in Appendix A). The efficiency at this point is approximately 69%, but the VRD could operate at up to 85% efficiency if techniques such as phase shedding were employed to ensure that the VRD only operated at its peak efficiency. Based on this the following calculations can be performed:

VRD output power at 10% loading (69% efficiency) = 6.6 W dc (from Table 1, Appendix A)

The input power at 69% efficiency is 9.7 W dc.

Assuming an efficiency improvement to 85% at this point, the input power consumed would be 6.6/0.85 = 7.8 W dc

This translates to a power savings of 9.7 - 7.8 = 1.9 W dc during Idle Mode.

Further assuming a *primary* power supply efficiency of about 80% during Idle Mode, this translates into 1.9/0.8 = 2.4 W of ac power savings.

Desktop computers may spend 8 to 16 hours per day in Idle Mode depending on whether they are operated in a residential or commercial environment, according to energy savings estimates made by the U.S. EPA ENERGY STAR program.[6] This means that the seemingly small 2.4 W ac power savings would translate into 7 to 14 kWh of annual energy savings per computer. Reducing idle losses in secondary power supplies will prove a valuable design strategy for computer manufacturers wishing to meet Idle Mode and annual energy consumption targets.

6. Summary of Assumptions for EPA ENERGY STAR ® Savings Estimates: ENERGY STAR Preliminary Draft Computer Specification (version 4.0). May 3, 2005. Available at: http://www.energystar.gov/ia/partners/prod_development/revisions/downloads/computer/Assumptions_Prelim_Draft_Comp_Spec.pdf.

8.0 Conclusions and Energy Efficiency Policy Recommendations

This study began the development process for a standardized test method for measuring secondary power supply efficiency. A framework for a standardize SPS test method was developed with slight variations for different SPS implementations such as VRD/VRM and POL. A lack of easily accessible test points means that the measurements described in this paper would be extremely difficult, but not impossible, to repeat on a larger scale and standardized basis. Measurement instrumentation will likely have to be specially adapted for the specific products in question, and the researchers expect that destructive testing is unavoidable. However, the study does show that measurements of SPS efficiency are possible for certain key energy-using product categories such as IT equipment and consumer electronics. It is highly recommended that industry groups pursuing secondary power supply measurements clearly define measurement instrumentation and methods for loading secondary power supplies to ensure repeatable results.

The results of this study further demonstrate that definite opportunities currently exist to increase efficiency in SPS designs for key electronics and IT products. Even so, the researchers do not recommend that policy makers and efficiency advocates push for prescriptive efficiency targets for secondary power supplies. The complications of standardized testing and *in situ* verification might complicate any attempts to prescriptively address efficiency in these products. The researchers do, however, strongly suggest that the efficiency measures identified in this report be carefully considered when addressing whole product efficiency as the improvement of SPS efficiency can be a key strategy in reducing the overall electricity consumption and associated carbon footprint of various IT and consumer electronics products.

Appendix A: Measurement Results for AMD-Compatible VRD

Table 11. Measurement Results for 3-Phase VRD on AMD Motherboard (VID set to 1.175 V)

Input Voltage (V)	2x2 Input Current (A)	VRD Input Current (A)	Output Voltage (V)	Output Current (A)	VRD Input Power (W)	Output Power (W)	VRD Efficiency (%)
12.10	0.30	0.26	1.28	0.00	3.18	0.00	0.0
12.06	0.84	0.80	1.27	5.22	9.68	6.63	68.5
12.03	1.38	1.34	1.27	10.38	16.16	13.18	81.6
12.01	1.93	1.89	1.26	15.55	22.73	19.59	86.2
11.99	2.49	2.45	1.25	20.63	29.41	25.79	87.7
11.97	3.05	3.01	1.24	25.74	36.07	31.92	88.5
11.96	3.63	3.59	1.23	30.86	42.97	37.96	88.3
11.94	4.20	4.16	1.22	35.94	49.71	43.85	88.2
11.92	4.78	4.74	1.21	41.00	56.54	49.61	87.7
11.90	5.37	5.33	1.20	46.00	63.46	55.15	86.9
11.89	5.96	5.92	1.19	50.93	70.42	60.61	86.1
11.87	6.56	6.52	1.18	55.84	77.43	65.89	85.1
11.86	7.16	7.12	1.17	60.68	84.48	71.00	84.0
11.84	7.76	7.72	1.16	65.50	91.44	75.98	83.1

Table 12. Measurement Results for 3-Phase VRD on AMD Motherboard (VID set to 0.8 V)

Input Voltage (V)	Input Current (A)	VRD Input Current (A)	Output Voltage (V)	Output Current (A)	VRD Input Power (W)	Output Power (W)	VRD Efficiency (%)
12.11	0.20	0.16	0.91	0.00	1.94	0.00	0.0
12.06	0.57	0.53	0.90	5.19	6.43	4.67	72.7
12.04	0.95	0.91	0.89	10.30	10.99	9.19	83.6
12.02	1.34	1.30	0.88	15.50	15.66	13.64	87.1
12.00	1.73	1.69	0.87	20.60	20.32	17.92	88.2
11.99	2.12	2.08	0.86	25.70	24.98	22.10	88.5
11.97	2.51	2.47	0.86	30.80	29.60	26.33	89.0
11.96	2.92	2.88	0.85	35.90	34.48	30.37	88.1
11.95	3.32	3.28	0.84	41.00	39.23	34.28	87.4
11.93	3.73	3.69	0.83	46.00	44.06	38.09	86.5
11.92	4.04	4.00	0.82	49.20	47.72	40.29	84.4

Table 13. Measurement Results for POL 1 on Intel Motherboard

Input Voltage (V)	Input Current (A)	Output Voltage (V)	Output Current (A)	Input Power (W)	Output Power (W)	Efficiency (%)
4.98	0.50	1.81	1.20	2.49	2.17	87.1
4.86	0.98	1.81	2.40	4.76	4.34	91.2
4.78	1.50	1.83	3.60	7.17	6.59	91.9
4.81	2.04	1.81	4.90	9.81	8.87	90.4
4.80	2.57	1.82	6.15	12.34	11.19	90.7
4.80	4.10	1.84	9.30	19.68	17.11	87.0

Table 14. Measurement Results for POL 2 on Intel Motherboard

Input Voltage (V)	Input Current (A)	Output Voltage (V)	Output Current (A)	Input Power (W)	Output Power (W)	Efficiency (%)
3.22	0.50	1.29	xx	xx	xx	xx
3.23	0.95	1.29	xx	xx	xx	xx
3.25	1.41	1.29	3.35	4.58	4.32	94.4
3.23	1.88	1.29	4.40	6.07	5.69	93.8
3.27	2.33	1.30	5.43	7.62	7.04	92.4
3.22	2.88	1.30	6.45	9.27	8.39	90.4
3.18	3.44	1.30	7.46	10.94	9.70	88.7

Table 15. Measurement Results for POL on AMD Motherboard

Input Voltage (V)	Input Current (A)	Output Voltage (V)	Output Current (A)	Input Power (W)	Output Power (W)	Efficiency (%)
4.78	0.78	1.83	1.77	3.73	3.24	86.90
4.45	2.14	1.83	4.80	9.52	8.80	92.40
4.35	3.10	1.81	6.70	13.49	12.13	89.90
4.21	4.15	1.84	8.56	17.47	15.77	90.20

Source: Ecos Consulting