Arnold Schwarzenegger
Governor

DEVELOPMENT OF A PARTIAL OXIDATION GAS TURBINE FOR COMBINED ELECTRICITY AND HYDROGEN-ENRICHED FUEL GAS PRODUCTION

PIER FINAL PROJECT REPORT

Prepared For:
California Energy Commission
Public Interest Energy Research Program

Prepared By:
Gas Technology Institute

November 2008
CEC-500-2008-057

Prepared By:
Gas Technology Institute
Project Manager: Joseph Rabovitser
Des Plaines, IL 60018
Commission Contract No. 500-02-005
Commission Work Authorization No:

Prepared For:
Public Interest Energy Research (PIER) Program
California Energy Commission

Jennifer Allen
Contract Manager

Arthur J. Soinski
Program Area Lead
Environmentally Preferred Advanced Generation

Kenneth Koyama
Office Manager
Energy Generation Research Office

Martha Krebs, Ph.D.
PIER Director

Thom Kelly, Ph.D.
Deputy Director
ENERGY RESEARCH & DEVELOPMENT DIVISION

Melissa Jones
Executive Director

DISCLAIMER

This report was prepared as the result of work sponsored by the California Energy Commission. It does not necessarily represent the views of the Energy Commission, its employees or the State of California. The Energy Commission, the State of California, its employees, contractors and subcontractors make no warrant, express or implied, and assume no legal liability for the information in this report; nor does any party represent that the uses of this information will not infringe upon privately owned rights. This report has not been approved or disapproved by the California Energy Commission nor has the California Energy Commission passed upon the accuracy or adequacy of the information in this report.

Acknowledgements

Partial Oxidation Gas Turbine development is being supported by the California Energy Commission's Public Interest Research Program, Gas Research Institute (GRI), and Utilization Development Company (UTD). Authors acknowledge the guidance and help of the Energy Commission's project managers, Dr. Arthur J. Soinski, Dr. John Henry Beyer, and Ms. Jennifer Allen, GRI's program manager, Dr. Maureen Droessler, and UTD Administrator Mr. Greg Maxfield.

Please cite as follows:

Joseph Rabovister, Stanley Wohadlo, Serguei Nester, Mehmet Tartan, John Pratapas, David Cygan, Vincent Gard, Rick Knight, Steven Palm (Alturdyne), Waseem Nazeer (Solar Turbines), Kenneth Smith (Solar Turbines), David White (Tritek), Steven I. Freeman, consultant. *Development of a Partial Oxidation Gas Turbine for Combine Electricity and hydrogen –Enriched Fuel gas Production.* California Commission, PIER Environmentally Preferred Advanced Generation Program. CEC-500-2008-056.

Preface

The California Energy Commission's Public Interest Energy Research (PIER) Program supports public interest energy research and development that will help improve the quality of life in California by bringing environmentally safe, affordable, and reliable energy services and products to the marketplace.

The PIER Program conducts public interest research, development, and demonstration (RD&D) projects to benefit California.

The PIER Program strives to conduct the most promising public interest energy research by partnering with RD&D entities, including individuals, businesses, utilities, and public or private research institutions.

PIER funding efforts are focused on the following RD&D program areas:

- Buildings End-Use Energy Efficiency
- Energy Innovations Small Grants
- Energy-Related Environmental Research
- Energy Systems Integration
- Environmentally Preferred Advanced Generation
- Industrial/Agricultural/Water End-Use Energy Efficiency
- Renewable Energy Technologies
- Transportation

Development of a Partial Oxidation Gas Turbine for Combine Electricity and Hydrogen-Enriched Fuel Gas Production is the final report for the project contract number 500-02-005 conducted by Gas Technology Institute. The information from this project contributes to PIER's Environmentally Preferred Advanced Generation Program.

For more information about the PIER Program, please visit the Energy Commission's website at www.energy.ca.gov/pier or contact the Energy Commission at 916-654-5164.

Table of Contents

Executive Summary 1

1.0 Introduction 5
1.1. Back ground and Overview 6
1.1.1. Technology Background 6
1.1.2. POGT Relationship to Conventional Gas Turbines 6
1.1.3. Engineering Embodiment of a POGT 9
1.1.4. Turbo machinery component consideration for POGT 9
1.2. Project Objectives 10

2.0 Project Approach or Methods 13
2.1. Design and Engineering Studies 13
2.1.1. Design Study 13
Reciprocating engines 13
Steam turbines 14
Industrial gas turbines 14
Microturbines 15
Fuel Cells 15
Partial Oxidation Gas Turbine 16
Energy and Environmental Policy Framework 18
Overview of Existing CHP Markets 22
Industrial Sector 26
Existing and Planned CHP Installations 27
Market Potential 28
Commercial/Institutional Markets 28
General Medical and Surgical Hospitals (SIC code 8062) 28
Elementary and Secondary Schools (SIC Code 8211) 29
Colleges and Universities (SIC Code 8221) 29
Correctional Institutions (SIC code 9223) 30
Others 30
Conclusions 30
Industrial Markets 32
Paper and Allied Product Manufacturing (SIC code 26) 32
Chemicals and Allied Product Manufacturing (SIC code 28) 32
Food and Kindred Product Processing (SIC code 20) 32
Primary Metals Industry Manufacturing (SIC code 33) 33
Others 33
Conclusions 33
MMC Market Survey 37
2.1.2. Engineering Study 40
POGT Conversion—Characteristics and Benefits 40
POGT Technology Benefits 42
POGT Conversion—Turbine Design Considerations 42
General POGT Conversion Requirements 43
Conversion of Solar Spartan T-350 45

Engine Modifications ... 46
Subsystem Requirements ... 48
Combustor Replacement with POR ... 49
2.2. POGT Unit Development and Test ... 51
Review of Conception Partial Oxidation Reactor Designs ... 52
POR Preliminary Design ... 56
POR Final Design ... 58
Detailed Design ... 61
2.2.1. POR Testing ... 62
2.2.2. POR Testing Overview ... 64
Task 1. Pressure Drop Characterization Tests ... 65
Task 2 Performance Evaluation – Light-off ... 67
Task 3 Performance Evaluation—Fuel Conversion Efficiency ... 69
Task 4. Exhaust Composition ... 71
2.2.3. POGT Unit Design, Fabrication and Test Plan ... 74
INTRODUCTION ... 74
BACKGROUND ... 81
POGT CONTROL MODEL PROJECTIONS ... 82
2.2.4. POGT Unit Testing ... 92
Test Plan ... 92
Data Analysis ... 97
2.2.5. POGT Unit Specification Development ... 109
2.3. System Modeling and Analysis ... 123
2.3.1. Model Development and Application ... 123
2.4. POGT Unit Boiler Lab Demonstration ... 126
2.4.1. POGT-Boiler Burner Development and Test Plan ... 126
20 MMBtu/hr Prototype Burner Laboratory Evaluation ... 128
20 MMBtu/hr Water tube Boiler Test Facility ... 128
The Fuel Supply ... 129
Combustion Air Supply ... 129
Analytical Equipment and Measurements ... 130
2.4.2. POGT-Boiler Burner Modeling and Testing ... 132
2.4.3. POGT-Boiler Burner Specification Development ... 135
2.5. POGT Unit-Boiler Lab Demonstration ... 136
2.5.1. Lab Test System Design and Test Plan ... 136
2.5.2. POGT-Boiler Lab Installation ... 136
2.5.3. POGT-Boiler Lab Testing ... 136
2.6. Technology Transfer Plan ... 138
2.7. Production Readiness Plan ... 140

3.0 Project Results ... 143
Cost Considerations of POGT Systems ... 143

4.0 Conclusions and Recommendations ... 146
4.1. Conclusions ... 146
4.2. Commercialization Potential ... 147
4.3. Recommendations ... 148
4.4. Benefits to California ... 148

5.0 Glossary 150

6.0 References 152

Appendices 154
Test Cell Process Control and Instrumentation 159
Test Cell Analytical Hardware 159
Test Data Measurement 160

POR Fabrication Pictorial Review 162

APENDIX A

Table of Figures

Figure 1. Conceptual Depiction of POGT 9
Figure 2. Existing Commercial Sector CHP Capacity by Fuel Type (MW) 23
Figure 3. Industrial Institute 26
Figure 4. Industrial CHP Capacity by Technology 27
Figure 5. Existing CHP Installations by Sector (2000 data) 27
Figure 6. Breakdown of Industries Queried in Market Survey 38
Figure 7. Respondents' Interest in POGT 39
Figure 8. Plans to Install or Upgrade CHP 39
Figure 9. Comparison of Air Requirements: (a) Conventional Turbine System, compressor uses 2/3 of fuel energy; (b) POGT System, compressor power reduced by 50%. 41
Figure 10. Spartan POGT Schematic 45
Figure 11. Spartan Steam Injection For Sealing and Cooling 47
Figure 12. Solid Model Drawing of POR and Casing 50
Figure 13. Spartan T-350 51
Figure 14. POR1 Schematic; Steam-Cooled, Internal Shroud, Parallel Injector Reaction Chamber Concept. 53
Figure 15. POR2 Schematic; Insulated (Un-cooled), Internal Shroud, Parallel Injector Reaction Chamber Concept 53
Figure 16. POR3 Schematic, Steam Cooled, Angled Injector, without Internal Shroud Reaction Chamber Concept 54
Figure 17. POR CFD computational meshes; a) represents POR3 case; b) represents POR1 case with internal shroud 55
Figure 18. POR CFD temperature profile predictions; a) represents POR3 case; b) represents POR1 case with internal shroud. 56
Figure 19. Spartan T-350 Engine Showing Can 57
Figure 20. Solid Model of POR Final Design Assembly 58
Figure 21. View of POR Annular Steam and Air Chambers 58
Figure 22. POR Injector Conceptual 59
Figure 23. POR Reaction Chamber Metal Temperature Predictions By ANSYS 62
Figure 24. POR Test Cell Schematic Diagram 63
Figure 25. View looking into POR Test Cell; visible is the main control panel, analytical hardware and DAS 64
Figure 26. POR Unit in Test Stand 64
Figure 27 Test Cell POR Air Supply Schematic 66
Figure 28. POR Process Controller, Siemens Model 353 159
Figure 29. POR Product Gas Analyzers on center and left racks; right rack contains POR pc-based DAS 160
Figure 30. Steam (Dilution and Process), Start Gas and Main Fuel Manifolds 165
Figure 31. Finished POR Assembly 167

Table of Tables

Table 1. Commercial Sector CHP by Prime Mover 24
Table 2. Selected Potential Commercial/Institutional Markets for CHP 31
Table 3. Summary of Potential CHP Capacity in Selected Commercial/Institutional Markets 31
Table 4. Selected Potential Industrial Markets for CHP 34
Table 5. Summary of Potential CHP Capacity in Selected Industrial Markets 34
Table 6. Cold-Flow Test Conditions 66
Table 7- Light-off Test Conditions 68
Table 8- Inlet Test Conditions - Methane Conversion Investigation 70
Table 9- Reaction Zone Steam Addition Effect Tests 72
Table 10- Residence Time Effect Tests 72
Table 11 Physical Models Used for CFD Calculations 132

Abstract

This was a development project to determine the practicality of a new type of gas turbine. A partial oxidation gas turbine (POGT) shows promise for unusually high efficiency power generation in industrial heat and power systems applications. Because the exhaust gas from the partial oxidation gas turbine contains much of the chemical energy in the incoming fuel, the gas can be fired in industrial processes, such as boilers, high temperature furnaces, kilns and annealing furnaces. The objective of the project was to develop and test a partial oxidation gas turbine in combination with a boiler for high-efficiency and low emissions heat and power. This two-step combustion approach enables very low nitrogen oxides (NOx) emissions. Compared to other cogeneration schemes, the ratio of power to heat can be easily varied. The project successfully modified a small gas turbine for partial oxidation gas turbine operation, operated it stably and verified scientific and engineering principles of partial oxidation gas turbine systems. It is believed that partial oxidation gas turbine systems can co-produce hydrogen and power needed by refineries and chemical plants. Partial oxidation gas turbine technology is ready to proceed to the engineering prototype stage.

Keywords: partial oxidation gas turbine, Combined Heat and Power, partial oxidation reactor, syngas, exhaust gas, NOx emission, microturbines, and industrial gas turbines

Executive Summary

Introduction

Gas Technology Institute developed and demonstrated a partial oxidation gas turbine (POGT). A small 200-kilowatt (kW) Spartan T-350 gas turbine, originally manufactured by Solar Turbines, was successfully converted to operate in a partial oxidation mode whereby operating conditions have less than the sufficient amount of oxygen for combustion (at approximately three atmospheres pressure). This was accomplished with the injection of steam to limit the hot gas temperature so that the turbine would be operated within its temperature limits. The steam injection, besides being necessary for temperature control, provides an increase in power and efficiency. The exhaust from the partial oxidation gas turbine is syngas or a gas containing most of the chemical energy of the initial fuel gas, but is diluted by the nitrogen in the air used to partially burn the fuel and by the steam injected for temperature control.

Such a system holds high promise for industrial applications in which electric power and hydrogen-rich syngas are needed. Due to unique aspects of partial oxidation chemistry with steam injection, the system produces approximately twice the amount of hot gas molecules per comparable unit than a combustion system. The efficiency of such partial oxidation gas turbine power generation is unusually high, over 60percent, and offers promise for low cost power generation in suitable applications. The two-step combustion process offers the ability to operate at high energy levels with very low nitrogen oxides emissions.

Purpose

The purpose is to improve the efficiency and economics of combining power generation, syngas production, high temperature heat generation, and steam generation. One intriguing application is to use the syngas as fuel for a fuel cell. The overall power generation of the combined system can then be raised to a level higher than that of the fuel cell itself and in a manner that creates virtually no nitrogen oxides.

Partial oxidation gas turbine is an innovative combustion turbine approach that promises industrial end-users a dramatic increase in energy efficiency and a dramatic reduction in air emissions when the syngas is fired in downstream burner(s). Unlike conventional cogeneration systems that completely burn the fuel in a gas turbine or reciprocating engine, partial oxidation gas turbine only partially burns the fuel in the initial reactor, completing the combustion with additional air in the boiler or furnace. Due to the unique chemistry of partial oxidation, this process produces about double the hot gas per unit of compressed air compared with full combustion systems. Residual chemical energy appears in the partial oxidation gas turbine exhaust in the form of a hot, hydrogen-rich/low heating value fuel gas. This gas is suitable for use in high temperature furnaces, process heaters, industrial boilers, production of hydrogen for refinery and chemical plant operation and potentially for ultra-high efficiency electric power generation via combined partial oxidation gas turbine and fuel cell system operation.

Objectives

The project objectives were to:

- Verify scientific and engineering basis for design of partial oxidation gas turbine equipment.
- Verify that partial oxidation gas turbine systems can be started up and operated stably.

This project worked on the design, development, and laboratory demonstration of an ultra-low-emission (nitrogen oxides) gas-fired partial oxidation gas turbine module for high efficiency power generation and production of syngas. The partial oxidation gas turbine module is intended to be part of a novel system for co-production of electricity and syngas that can be consumed in boilers, industrial furnaces, or process heaters. The partial oxidation gas turbine can also be combined with other power generation devices such as a fuel cell resulting in a highly efficient hybrid electric generation system.

An ancillary United States Department of Energy-sponsored project complemented the California Energy Commission (Energy Commission) project and used the partial oxidation gas turbine module to supply a fuel gas slipstream to a hydrogen purification system. That project is not completed and intends to demonstrate the technical and economic feasibility for distributed co-production of power and high-purity hydrogen with partial oxidation gas turbine.

In this project, a partial oxidation gas turbine was created from a Spartan gas turbine. The converted turbine was operated in the partial oxidation gas turbine cycle, and the fuel gas produced by the partial oxidation gas turbine was used in a burner that produced low nitrogen oxides and supplied heat to a boiler. The tests demonstrated the two-step process, i.e., partial combustion in a high-efficiency gas turbine and syngas burnout in the boiler.

Conclusions

A partial oxidation gas turbine cycle system has been built and successfully operated demonstrating the engineering feasibility of this unusually high-efficiency process. Oxides of nitrogen levels in a syngas-consuming boiler or furnace operated with low excess oxygen are expected to be are quite low. No aspect of the equipment operated in any mechanically unusual manner. Industrial applications of partial oxidation gas turbine technology can now be pursued.

The partial oxidation gas turbine combustor has a fuel-air reaction which converts a portion of the fuel energy to a combination of heat and syngas. In order to limit the temperature of the combustor exit gas to levels which the turbine materials can tolerate, steam injection into the combustor is used. Compared to conventional complete combustion of the same fuel, partial oxidation gas turbine combustion results in an approximate doubling of the molar volume of the combustion products. This enables the expansion process to generate approximately double the power that it would produce if conventional combustion was used. The expansion turbine converts this increased volume of hot gas to shaft power, which, in turn is used to generate electric power. In the partial oxidation gas turbine, natural gas is combusted under conditions

that result in a significant residual fuel value (approximately 90 percent of the fuel value of the incoming fuel) in the exhaust gases, which can then be utilized elsewhere in the plant. This exhaust gas consists of hydrogen, carbon monoxide, carbon dioxide, nitrogen, and steam. It is expected that the gas can be burned with very low nitrogen oxides and carbon monoxide emissions at low oxygen concentrations for high-efficiency heat and power operation.

The project reported herein included the following tasks:

- Systems analysis and selection of demonstration system configuration and gas turbine model for demonstration test.
- Design and fabrication of a prototype, pressurized, non-catalytic partial oxidation reactor to replace a conventional combustor arrangement on a converted 200 kW Spartan T-350 turbine engine.
- Reconfiguration of the Spartan turbine to accommodate a cycle in which the ratio of the expander gas volume to the compressor air volume was approximately twice the original design.
- Development of control and startup sequence and systems for stable operation.
- Proof of concept testing of the partial oxidation gas turbine-modified Spartan gas turbine.

Gas Technology Institute , along with Solar Turbines, Inc, and Tritek Energy Consulting, teamed with Belcan Engineering to develop a totally new partial-oxidation-reactor combustor design. This design was demonstrated, first in a test rig setting, and later during performance tests with a Spartan T-350 turbine engine converted to run in the partial oxidation gas turbine mode of operation.

The completed feasibility demonstration partial oxidation gas turbine was installed and operated in the Gas Technology Institute Emerging Energy laboratory in Des Plaines, Illinois. The partial oxidation gas turbine operated stably and without noticeable soot formation at low chemical reaction ratios (with steam injection). Satisfactory partial oxidation gas turbine testing with the exhaust gas consumed in a boiler was documented. In the demonstration, the syngas was burned to completion in a water-tube boiler with less than 9 parts per million by volume of nitrogen oxides.

A conceptual process design application of the ASPEN® chemical system analysis computer program for use in analyzing partial oxidation gas turbine cycles was created. Initial engineering verification data was obtained that can be used to validate ASPEN® modeling of partial oxidation gas turbine under a variety of design conditions.

This project demonstrated the technical feasibility to successfully design, fabricate, and assemble a prototype unit; integrate it with a conventional small gas turbine modified for a partial oxidation gas turbine cycle; operate it in a partial oxidation gas turbine mode that demonstrates its unique high ratio of expansion turbine gas volume to air compressor volume; and start and operate it under stable conditions with a boiler with extremely low emissions.

A commercial partial oxidation gas turbine comprised of an air compressor and a steam injected partial oxidation reactor combustor can operate stably and without soot formation. Such a partial oxidation gas turbine offers industrial and power generation energy managers with a potential revolutionary means for co-production of highly efficient (greater than 60 percent power generation efficiency), on-site electric power, and hot syngas. A business case must still be made that the partial oxidation gas turbine can be cost-competitive to systems composed of ordinary gas turbines. Data from the modified Spartan small gas turbine tests under partial oxidation gas turbine operation has provided the basis to verify the design engineering and use-cycle analysis. This data can be used to provide cleaner and more efficient combined heat and power systems.

Recommendations

Partial oxidation as turbine should be considered for applications in which syngas and electric power are in high demand and which are expected to experience industrial expansion. Such applications include a combined microturbine commercial/small industrial boiler, a hydrogen source for refineries, chemical plants, and a hydrogen source for fuel cells. The overall efficiency of a partial oxidation gas turbine-fuel cell hybrid plant would be greater than that of the fuel cell itself, which is rather high to begin with.

Benefits to California

Meaningful estimates of market penetration cannot be made at this time so quantitative benefits are uncertain. Qualitative benefits include increased efficiency of power generation of partial oxidation gas turbine combined heat and power systems due to their ability to operate at the lower oxygen levels and increased efficiency of small combined cycle plants. Benefits to the environment include lower nitrogen oxides (NOx) at low exhaust oxygen content. This is due to the burning of syngas with carbon monoxide and hydrogen as the combustibles rather than hydrocarbons with their stronger carbon-to-hydrogen bonds. The economic benefit of the lower cost per kilowatt of power generation equipment has not yet been evaluated and is extremely difficult to put a number on at this time. Lower cost power generation equipment will benefit both the manufacturer of such equipment and, to a greater extent, the user of such equipment.

1.0 Introduction

Research and development into the application of POGT concepts for power generation was first performed by the Institute of High Temperature (IVTAN) in the former Soviet Union in the late 1950s [1]. The result of this research and development was the demonstration of a working POGT. In one published application by IVTAN [2], residual fuel oil was partially combusted to produce high-pressure steam and a fuel gas, which was then cooled and cleaned to remove ash and sulfur compounds. The steam and purified fuel gas were then used for power generation. A 1970 patent for a POGT by Jacques Ribesse of the JARIX company in Brussels, Belgium, followed by a technical paper in 1971 [3], and a second paper describing further improvements in 1991 [4], which described the gas turbine, air compressor, catalytic partial oxidation reactor (POR), and expansion turbine. Partial or total combustion of the combustible gas (leaving the POR) and passing through the expansion turbine was accomplished by injecting air into the turbine vanes. This simultaneously accomplished both the needed cooling and, through local combustion, an isothermal expansion [5].

In 1992, IVTAN published a paper describing an innovative combined cycle utilizing a POGT for the repowering of existing natural-gas-fired steam turbine power plants. The retrofit modifications were estimated to improve fuel efficiencies to between 70-80% and reduce NOx emissions by a factor of 10 or more [6]. Efficiencies are increased mainly because of (i) complete use of the thermal energy of the hot pressurized gasified product gas supplied by the POGT; (ii) reduced air flow requirements typically about 65 percent of that used for a conventional expansion turbine, (iii) much larger volumetric gas flow in the turbine, taking into account the lower density of the partial oxidation products, (iv) higher specific heat of the turbine working fluid, and (v) close to isothermal expansion, allowing a better utilization potential of the heat [1].

Hodrien and Fairbairn in 1993 evaluated the POGT in a report prepared for British Gas as a highly promising cycle with a potential efficiency above 60% [7]. Further study at the University of Liege (Belgium) in collaboration with other European partners, which included preliminary analysis and testing, concluded POGT has good potential for power generation applications and CHP applications as well [8].

GTI has been actively working on the POGT concept since 1995. With support from the US Department of Energy (DOE) and Gas Research Institute (GRI) GTI (formerly Institute of Gas Technology) teamed up with Siemens Westinghouse Power Corporation (SWPC) (formerly Westinghouse) to perform a system study of POGT applications [1]. The cycles studied included (i) a conventional natural-gas-fired gas turbine with a POGT utilized as a topping cycle, (ii) a combined cycle plant joining a POGT with a steam turbine, and (iii) a repowering system for coal-fired power plants using a POGT as a topping cycle. In a continuation of this work Westinghouse performed technical feasibility studies and cost analyses of the (partial oxidation) PO power cycle and concluded that there was potential for significant plant heat rate and cost-of-electricity improvements [9].

In a recent development effort to demonstrate a POGT for on-site CHP generation, GTI with support from the California Energy Commission, GRI and Utilization Technology Development (UTD), has teamed with Solar, Tritek, Alturdyne, and the Belcan Corporation to design, fabricate, and install at a 7-MWth pressurized non-catalytic POR at GTI. This POR replaces the combustor of the Solar's Spartan-350 conventional gas turbine modified to operate in a POGT mode. GTI together with Solar, Alturdyne, and Tritek developed a design approach for conversion of a conventional turbine to operate in POGT duty. The design was implemented for conversion of the Spartan-350 to a POGT unit that was installed and tested at GTI's combustion laboratory.

1.1. Back ground and Overview

1.1.1. Technology Background

GTI, Energy Commission, Solar, Tritek, and Alturdyne are developing an innovative natural gas-fired POGT for combined on-site electricity, heat, steam, hydrogen or syngas production. With the POGT integrated at a selected industrial site, the customer is able to generate power at very high net fuel to power generation efficiencies for on-site use or for sale. The fuel by-product is then directed to on-site energy conversion units for improved energy and environmental performance.

1.1.2. POGT Relationship to Conventional Gas Turbines

Conventional combustion consists of mixing fuel and more than sufficient air to burn all of the fuel, igniting the mixture, and managing the combustion products to drive an expansion turbine to generate power. In PO processes, the amount of air used is considerable less than what is required for complete combustion. The products of partial oxidation still have appreciable unburned chemical energy in the reaction gases and those exhaust gases as a syngas are the secondary product of the POGT. The vessel which contains the partial oxidation process is called the POR. In a POGT, the POR replaces the combustor as the source of pressurized hot gas. An amount or air, which is less than needed for complete combustion, is first compressed in a conventional compressor then reacted with the fuel, under pressure (the fuel is partially burned or oxidized). The resulting hot gases expand to ambient pressure in an expansion turbine of conventional design.

Like in a conventional gas turbine, the expansion turbine drives the compressor and the electrical generator. However, the combustion products are too hot for the expansion turbine if a conventional fuel, natural gas, distillate oil, kerosene or jet fuel, and the correct amount of air for complete combustion were to be used. To remedy this situation, extra air and excess air, are delivered by the compressor and dilutes and absorbs excess heat from what would be the too hot gas products. This delivers hot pressurized gas to the expansion turbine at a temperature no hotter than the materials of the expansion turbine can be exposed to for reliable operation. In a conventional gas turbine about three times the air needed for complete combustion is used in the combustor (300 percent theoretical air). The expansion turbine inlet temperature is within the limits of the turbine for long life, high efficiency, and reliable operation.

In a POGT, insufficient air, typically 35% to 45% of that required for stoichiometric combustion, is used in the reactor/combustor where the partial oxidation/combustion reaction takes place. Steam is injected into the POR as part of the POR temperature control process. This delivers hot pressurized gas to the expansion turbine at a temperature no hotter than the materials of the expansion turbine can reliably accept.

In the POR an unusual phenomenon occurs; the volume of the combustor exhaust gas is slightly more than double, which occurs if a conventional combustor were used on a conventional gas turbine, operating with excess air to control the exit gas temperature. In a POGT, at a stoichiometric ratio of 0.4 (40 percent of the air needed for complete combustion is used), with steam injection sufficient to limit the reaction products. For a typical microturbine operation (turbine inlet 165 °F at a pressure of 3.95 atmospheres), the POR reaction generates 2.28 volumes (moles) of reaction products per volume (mole) of air compressed. This is contrasted with a conventional gas turbine where the combustor produces only 1.035 moles of combustion products per mole of air compressed. This increase in gas volume is the breakup of one volume of methane plus one-half a volume of oxygen into a combination of one volume of carbon monoxide and two volumes of hydrogen, for a total of three volumes. Some of the carbon monoxide or hydrogen appears as carbon dioxide or water vapor when the stoichiometric ratio is above 0.25, the minimum value that can be used without ensuring soot, fine carbon particles, in the reactor products. The chemistry of this large volume increase is summarized in Appendix A.

The additional 0.035 moles in combustion in a conventional gas turbine are the consequence of the input (already compressed) fuel to the combustor.

The volumetric increase is the source of both the high efficiency and the need for approximately double the volumetric capacity of the expansion turbine process as compared with that of a conventional gas turbine. The lower compressor capacity per unit of expansion turbine capacity leads to higher POGT specific power (kilowatt output per pound mass flow). This is an important cost advantage which is expected to be reflected in lower price to the user and more favorable energy system economics to the owner.

The remainder of a POGT cycle, as analyzed by GTI, involves two heat exchangers which superheat the steam and preheat the natural gas fuel, thereby recovering sensible heat from the exhaust stream and increasing POGT efficiency, then the still somewhat hot exhaust gas is led to the heat recovery steam generator (HRSG), essentially a boiler, where saturated steam is produced from the sensible heat in the POGT exhaust. The three internal (to the cycle) heat exchangers; the steam superheater, the fuel gas preheater and the (HRSG), contribute substantially to high efficiency of the POGT.

The POGT process is power generation at very high net fuel utilization efficiency, 68.5%, based on the net fuel energy consumed. The fuel energy in the POGT exhaust is used in an energy consuming boiler or furnace. In one case study, net fuel utilization efficiency was the net power delivered divided by the net fuel energy consumed. The difference between the fuel input to the POGT and the combustible fuel gas delivered to whatever application the host has need for.

Note that POGT receives some "free power" in the form of the fuel (compressed natural gas) entering the POGT being already compressed. For the same conditions, but with the fuel entering the POGT at the same pressure as the ambient air, fuel compression is required in a power consuming compressor. The efficiency will be 63.6%.

High efficiency can only be obtained when hydrocarbon fuel is partially combusted and the low energy content fuel in the POGT exhaust used in a second, serial, fuel utilizing application.

The POGT exhaust gas is of low energy content as only a part of the energy in the incoming fuel is used in the POR to supply heat to the POGT working gas, and to the dilution effect of the injected steam. This low energy content, low calorific value (LCV) or low BTU fuel, typically has an energy density only about 10% of that of natural gas. The original natural gas contained the POGT exhaust, in one case, about 90% of the original chemical energy in the natural gas used. This is due to the various dilution and heat utilization effects in the POR and POGT. The high efficiency of the POGT is real; however it only applies to the small portion of the energy in the incoming hydrocarbon fuel convertible to heat in a partial oxidation reaction.

There are two efficient applications for the POGT. One is when the hydrocarbon fuel is used only for its heat value, as in a boiler, furnace or process heater. The other is when the hydrocarbon fuel is converted into syngas for use as a hydrogen source for chemical application. In these two applications, power (essentially electricity) can be generated at high efficiency when converting the fuel from a high energy content to a low energy content, where it still can be used for heat or chemical purposes.

Produced fuel gas obtained with POR technology has low heating value and contains a significant amount of hydrogen. Other components in the gas include CO, CO2, N2, and steam. This clean gas at the pressure of the POGT exhaust is readily suited to provide supplemental energy via burnout combustion for a variety of applications. Applications include furnaces, boilers and heat engines, reciprocating engines or gas turbines; all are capable of using such low heating value fuel at POGT discharge pressure. Potential applications under study include hydrogen/syngas production and gas feed suitable for fuel cells.

Major benefits projected with POGT technology compared with a small fired cogeneration system (100 to 500 kW electrical outputs) are:

- Increase in overall thermal efficiency of over 30 percent for the portion of the fuel energy used in the power generation process
- Reduced cost for electrical power generated
- Reduced gaseous emissions of 50 to 70 percent for NOx and CO from the eventual burnout of the low heating value fuel that is the POGT exhaust
- Production of a hydrogen enriched secondary fuel in addition to electrical power

1.1.3. Engineering Embodiment of a POGT

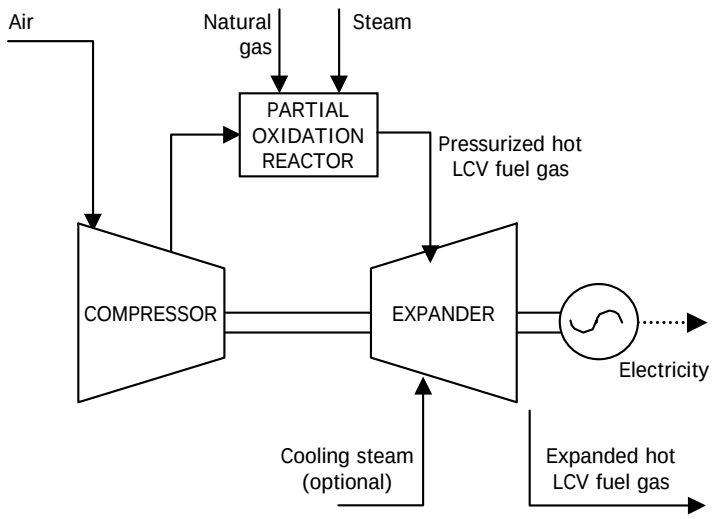

Figure 1. Conceptual Depiction of POGT

Source: Gas Technology Institute

The basic concept of the POGT unit is illustrated in Figure 1.. The can combustor typically found in conventional turbine arrangements is replaced with a pressurized, non-catalytic, POR assembly. POR fuel (typically natural gas) and air combine and premix at substoichiometric (less air than needed for complete combustion of the fuel) concentrations in an injector unit. Steam is also injected into the POR in order to control the temperature of the hot reaction product gases to levels which the expansion turbine, and the POR walls themselves, can accommodate in a manner consistent with long life and durable operation. These mixed gases exit the injector into a reaction chamber and partially combust at elevated temperatures (about 1650°F for Spartan engine). The steam provides both dilution cooling of the POR exhaust gases and modifies the chemical species of the fuel gas produced from the POR. The produced fuel gas exiting the POR are directed into an expansion turbine for conversion of energy in flowing hot, pressurized gas into shaft power for subsequent electric power generation. The reduced pressure turbine exhaust gas (hot and fuel rich) is used in on-site energy consuming operations to complete the POGT technology scheme. There is now an increase of the efficiency of power generation compared to conventional combined power and heat schemes employed in industry today.

1.1.4. Turbo machinery component consideration for POGT

The feature enabling POGT to be so efficient in power generation from the process of converting a portion of the energy in the fuel from high BTU fuel to low BTU fuel is the accompanying volume increase, as mentioned above and calculated in Appendix A. This feature, however, has

a negative aspect. The turbine air compressor pairs used in conventional gas turbines have been designed for a gas product to an air molal ratio of 1.035 rather than a ratio of 2.28 in POGT systems. A consequence of this 2.2 relative increase in expander gas molal volume to air compressor molal volume means that existing gas turbines experience difficulty in conversion to POGT cycles. This is when the original air compressor and expansion turbine are retained in their present 1:1 configuration. There are several ways to avoid an enlarged turbine size. One is to use two expansion turbines and two POR reactor/combustors per POGT air compressor. The other is to use one POR, one compressor and one turbine. This can be used in modifying existing microturbines for POGT use. The compressors and turbines are being manufactured in volume for diesel turbocharger use at the same pressure ratio range as microturbines. Such components can be selected or custom specified engineered from available turbocharger components on a mix and match basis for use in a single POR, single turbine POGT. Gas turbine/turbo compressor engineers use the compressor maps of the relationship between gas properties flow, pressure ratio, efficiency and rotating speed to select a compressor-turbine matched pair capable of operation with adequate surge margin (to avoid compressor stall) for a practical unit.

Using the components of large gas turbines along with industrial and utility machines to create POGT systems is not a technical problem. However, some engineering work needs to be done for the new configuration of two expansion turbines per air compressor. The two POR and two expander configuration needs to have the bearings resized for the greater reaction force. A turbine internal air cooling needs to be replaced by steam cooling. A modified casing and a rotating seal needs to added to the inlet end of the second turbine is also required. A compressor and expansion turbine mix and match scheme may be possible with existing components if de-staged turbines are considered. Using turbo machinery component maps enable engineers to possibly find mutually acceptable rotational speeds, flow rates, and pressure ratios with adequate surge margin. With any configuration, the seals and bearings need to be reevaluated and the bearings possibly enlarged.

1.2. Project Objectives

Verify scientific and engineering basis for design of POGT equipment. Verify that POGT systems can be started up and operated stably.

The objective of this project is the design, development, and demonstration of an ultra-low-NOx gas-fired POGT module for high efficiency power generation and production of syngas. The POGT module is intended to be part of a novel system for co-production of electricity and syngas that can be consumed in boilers, industrial furnaces, or process heaters. The POGT can be combined with a solid oxide fuel cell as a highly efficient hybrid electric generation system. In this project, a POGT was created by using a Spartan gas turbine as a base, operated, and the fuel gas produced by the POGT was tested in a low NOx burner supplying heat to a boiler. The tests demonstrated the two-step process; partial oxidation in a high efficient gas turbine and low NOx burnout of syngas in the boiler.

Under a DOE sponsored project, the POGT module resulting from the California Energy Commission (Energy Commission) project will supply a fuel gas slipstream to a hydrogen purification system and demonstrate the technical and economic feasibility for distributed co-production of power and high purity hydrogen.

2.0 Project Approach or Methods

2.1. Design and Engineering Studies

2.1.1. Design Study

A CHP system includes a prime mover that converts fuel energy into mechanical energy. This is done by shaft power driving a generator and also includes a subsystem for recovery of exhaust heat to provide steam or hot water for on-site use. The synergy provided by the CHP approach increases power generating efficiency from 30-40% for a standalone simple cycle power generator to 60-70%.[1] Information in this section was obtained from two reports on CHP prepared for NYSERDA[2] and DOE.[3] CHP system engineering requires the integration of components including "fuel treatment, combustion, mechanical energy, electric energy, electricity conditioning, heat recovery, and heat rejection systems."[4] Although any fuel can be used for power generation, "…the economics, availability, and environmental cleanliness of using natural gas make it by far the most preferred fuel for CHP technologies".[5]

There are currently five basic types of CHP prime movers: reciprocating engines, steam turbines, industrial gas turbines, microturbines, and fuel cells. A versatile new technology called the Partial Oxidation Gas Turbine or POGT is currently being developed and should be available for a field demonstration in a few years.

Reciprocating engines

Reciprocating internal combustion engines are a commonly used prime mover for small power generation systems, and are also found in smaller CHP applications. Because of their electrical generation efficiencies in the range of 25-50%, IC engines are a "… economic CHP option in many applications".[6]

The NYSERDA report describes some of the characteristics of reciprocating engines used for power generation[7]:

---

[1] "Combined Cycles, Waste Heat Recovery and Other Steam Systems," *Steam 40.* Babcock & Wilcox.

[2] Hedman, B.A., K. Darrow, and T. Bourgeois. "Combined Heat and Power Market Potential for New York State." *Final Report prepared by Onsite Energy Corporation and Pace Energy Project for New York State Energy Research and Development Authority (NYSERDA Report 02-12).* Oct 2002.

[3] Hedman, B.A. "The Market and Technical Potential for Combined Heat and Power in the Commercial/Institutional Sector." *Final report prepared by Onsite Sycom Energy Corporation(OSEC) for the US DOE Energy Information Administration.* Jan 2000.

[4] Ref. 2, 2-1.

[5] Ref. 2, 2-1.

[6] Ref. 3, 62.

[7] Ref. 2, 2-4.

Spark ignition (SI) engines for power generation use natural gas as the preferred fuel – though [they] can be set up to run on propane or gasoline. Diesel cycle compression ignition (CI) engines operate on diesel fuel or heavy oil or can be set up in a dual-fuel configuration that can burn primarily natural gas with a small amount of diesel pilot fuel or to be switched to 100% diesel. Current generation internal combustion engines offer low first cost, easy start-up, proven reliability when properly maintained, and good load-following characteristics. Drawbacks of IC engines include relatively high noise levels, relatively high air emissions and the need for regular maintenance.

Emissions, chiefly NOx, CO, and hydrocarbons, can be controlled by the use of catalysts on the exhaust stream. Advanced engine designs are also used to reduce emissions for stationary applications. CHP installations based on reciprocating engines can be designed to produce hot water or low-pressure steam, depending on the system size. Reciprocating engines are "well suited for… packaged CHP in commercial and light industrial applications of less than 10 MW".[8]

Steam turbines

Electric power in the US is generated primarily by steam turbines, wherein the heat and pressure of steam produced in a boiler is converted to mechanical (shaft) power. The required high-pressure steam is an energy carrier that is generated from a primary heat source such as; combustion of fossil fuel, biomass, or opportunity fuels such as process gases or municipal waste. Non-fuel sources of heat for raising steam include geothermal sources and nuclear fission. Steam turbines operate over a wide range of sizes, from "…fractional horsepower to more than 1,300 MW for large utility power plants."[9]

In CHP applications, exhaust steam "… can be used directly in a process or for district heating. Or it can be converted to other forms of thermal energy including hot water or chilled water."[10] Regarding energy efficiency, the previously cited Onsite Sycom Energy Corporation (OSEC) report states that "Modern large condensing steam turbine plants have efficiencies approaching 40-45%, however, efficiencies of smaller industrial turbines can range from 15-35%."[11]

Industrial gas turbines

Industrial gas turbines produce high quality heat that can be used to generate steam for on-site use or for additional power generation (combined cycle). Industrial gas turbines are an established technology in sizes from several hundred kilowatts up to about 50 MW. Utility-sized combustion turbines fall in the 100-300 MW size range.

Gas turbines can be set up to burn natural gas, a variety of petroleum fuels, or they can have a dual-fuel configuration. Gas turbine emissions can be controlled to very low levels using dry lean combustion techniques, catalytic combustion, water or steam injection, or exhaust

---

[8] Ref. 3, 25.

[9] Ref. 3, 67.

[10] Ref. 3, 70.

[11] Ref. 3, 69.

treatment such as selective catalytic reduction. Other attractive features of industrial gas turbines include their relatively low maintenance cost and high-quality waste heat in the form of high-temperature exhaust gas.[12] These qualities make gas turbines a preferred choice for combined cycle systems that match a gas turbine with a steam turbine for power generation efficiency up to 60%.[13] For pure CHP applications, the hot turbine exhaust gas can be used to raise steam in a HRSG for even higher efficiencies. Because gas turbine combustors use high excess air to moderate turbine inlet temperatures, the exhaust contains enough oxygen to support supplemental firing of natural gas, which in turn increases the potential steam output of the HRSG. Such CHP installations can deliver efficiencies of 90% or more. [14]

NOx, CO, and hydrocarbon emissions from gas turbines are generally lower than those from reciprocating engines. Uncontrolled gas turbines produce 75 to 200 ppmv NOx (ref 15% oxygen), but NOx can be greatly reduced by emission control methods including dry lean combustion, water/steam injection, catalytic combustion, and selective catalytic reduction.[15] Due to the ability to meet stricter air quality regulations, gas turbines are the preferred technology for medium to large CHP systems.

Microturbines

Microturbines are very small combustion turbines with outputs of 30 kW to 300 kW. Several companies have developed commercial microturbine products and are in the early stages of market entry. A number of other competitors are developing systems and are planning to enter the market within the next few years.

The operating theory of the microturbine is similar to the gas turbine, except that most designs incorporate a recuperator to recover part of the exhaust heat for preheating the combustion air. Air is drawn through a compressor section, mixed with fuel, and ignited to power the turbine section and the generator. The primary engineering features that make microturbines attractive are their compact construction and reduced noise levels which make them easier to locate in a facility. Efficiency levels range from below 20% to nearly 30% and NOx emissions have been demonstrated below 10 ppmv (ref 15 percent oxygen). The most suitable markets for microturbines are smaller facilities that pay higher prices for grid power than large industrial customers.[16] However, the relatively low-temperature heat output is not suitable for generating high-pressure steam, but can be combined into CHP systems that produce low-pressure steam or hot water.

Fuel Cells

Fuel cells produce power electrochemically, more like a battery than like a conventional generating system. However, unlike a storage battery which produces power from stored

---

[12] Ref. 3, 69.

[13] Ref. 2, 2-6.

[14] Ref. 2, 2-6.

[15] Ref. 3, 75.

[16] Ref. 3, 78.

chemicals, fuel cells produce power when hydrogen fuel is delivered to the cathode of the cell and oxygen in air is delivered to the anode. The resultant chemical reactions at each pole create a stream of electrons (or direct current) across the opposite charged poles of the cell. The hydrogen fuel can come from a variety of sources; the most economic is steam reforming of natural gas, a chemical process that strips the hydrogen from both the fuel and the steam.

Fuel cells promise higher efficiency than generation technologies that are based on heat engine prime movers. They operate at, "electrical efficiencies of 40-60% and up to 85% (overall efficiency) in CHP."[17] They are also quiet and clean, with such low emissions that they have little environmental impact. Many fuel cells are modular and are capable of application in small commercial and even residential markets. However, installed costs remain relatively high. According to the previously cited NYSERDA report, "…fuel cell application has been limited to niche markets such as very high cost areas or those requiring near zero emissions."[18]

Partial Oxidation Gas Turbine

Introduction and conversion of a conventional gas turbine to POGT mode

The benefits of a POGT are exemplified by comparing it with its closest gas turbine-based competitor: the supplementary fired simple cycle cogeneration system. It is often referred to as a fired cogeneration unit. Small fired cogeneration systems (100 to 500-kW electrical output), using best practices provide overall thermal efficiencies on the order of 65%, assuming a 1550°F firing temperature and a 60% efficient boiler. A POGT conversion based on a similar size engine is likely to have overall cogeneration system efficiency (based on steam) of around 75% or higher. Optimally designed POGT systems employing cogeneration have efficiencies on the order of 88%. By comparison, large fired cogeneration systems typically have efficiencies in the range of 70 to 75%, higher than small systems. POGT in a cogeneration mode produces very low NOx emissions -- less than 3 vppm (ref 15 percent oxygen), or less than 9 vppm (ref 3% oxygen). Most fired cogeneration systems have much higher NOx levels that, although highly variable, will be for the most part higher than 20 ppmv (ref 3 percent oxygen).

There are general requirements to convert a "standard" simple cycle and recuperated gas turbines to POGT configurations. The Solar Spartan T-350 is being used as a pilot unit for conversion to POGT mode operation and its demonstration of the POGT concept and benefits. There are features that make some gas turbines more desirable and easier to convert than others. Specifically, those gas turbines with a can-type combustor that is externally accessible, such as the Spartan T350 are more easily converted than those employing annular combustors. Recuperated gas turbines in general are prime candidates for conversion as they use readily accessible air and hot gas lines connecting the engine proper to the recuperator. These lines often can be modified to allow the regular combustor to be replaced with a POR.

The obsolescent Solar Centaur T3000-R is an example of a recuperated gas turbine that has the combustor mounted externally in the heated air line connecting the recuperator to the engine.

---

[17] Ref 3, 79.

[18] Ref. 2, 2-8.

Versions of this engine with the compressor removed also have been studied. The combustion air in such systems is supplied by some external compressor system or air source. This particular engine can be easily modified to a POGT configuration. The modern Solar Mercury 50 engine is also a very good candidate for conversion to a POGT configuration, because the combustion system is designed to allow many different combustor types, including catalytic systems, to be used. A POR can readily be mounted to the Mercury because the external air lines can be easily modified as required for POGT mode operation.

The main modifications needed to convert a standard gas turbine to a POGT derive from three basic requirements: (1) replacement of the existing combustor with the POR; (2) avoiding the ingress of pressurized air into the hot POR exhaust products and turbine internals, where the POGT operates on fuel rich gases as working fluid; and (3) prevention of hydrogen-rich fuel gas leakage from the exhaust section. In many cases, there is a desire to maintain the output power of the converted gas turbine to the same level as the original system. Because the hot gases entering the turbine have a much higher specific heat than standard gas turbine combustor products, the turbine extracts more power from them. To compensate, the air flow through the system has to be reduced and compressor work lowered. In addition, the fuel flows are higher than those for a standard gas turbine. This fact, combined with a need to inject steam for cooling and temperature control, requires a further decrease in the air flow to maintain output power within the limits of the standard gas turbine generator. If desired, the extra available power can be extracted, but this requires increasing the size of the generator and associated equipment.

Subsystems such as the fuel and control systems associated with the standard gas turbine have to be modified or replaced. For example, the POGT requires a different light-off and shut-down procedure than a typical gas turbine. In addition, in applications where the POGT produces two products such as electrical power and hydrogen from the secondary fuel, the control system needed is also different from that employed by a standard gas turbine.

POGT Characteristics and Benefits

- Production of electricity and hydrogen-enriched secondary fuel
- Operation at less than 15% total excess air
- Low air compressor power required
- Operation at high thermal efficiency in both power generation and cogeneration modes
- Operation at ultra-low NOx emissions
- Air staging with energy removal between stages
- Controlled ratio of electricity to heat, steam, hydrogen, and syngas production
- Utilization of steam (or Flue Gas Recirculation or FGR) for POR and turbine cooling

POGT differs significantly from other prime movers in that it not only generates useful power but also produces a secondary low- to medium-energy-content fuel as the exhaust gas. If oxygen is used instead of air, the heating value of the secondary fuel increases significantly. Thus the POGT produces two products. The secondary fuel can be combusted in a boiler, providing steam or hot water as a cogeneration system. The secondary fuel could be burned in a

furnace and the associated electricity generated could be used to power the plant. Another alternative use for the secondary gas could include the production of syngas (syngas) that could be converted to liquid fuel or hydrogen through shift conversion.

The increased efficiency of the POGT is evidenced by the fact that much more of the oxygen in the air is consumed in the overall operation (combusting the secondary fuel) when compared to a conventional gas turbine. The higher the oxygen consumption (or lower total excess air), the higher the system efficiency will be, for a given power output.

By controlling the fuel-to-air ratio and steam flow rate in the POR, the ratio of secondary fuel energy to generated electrical energy can be varied. The "quality" or hydrogen content of the secondary fuel can also be adjusted by varying steam and fuel flow rates. This is of great advantage when the production of syngas or hydrogen is the intended purpose of the POGT system in addition to the required power generation. The high flexibility of controlling the ratio of power to other energy output (steam, hot water, compressed air, or secondary fuel) is a great benefit when POGT is applied in CHP systems.

Energy and Environmental Policy Framework

Electricity Restructuring

The US electric utility industry is currently in the process of being deregulated and restructured. Among the many issues being re-examined is the manner in which emissions and regulated and controlled, as discussed in a 2003 report.[19] In the author's words, "Although restructuring is moving in fits and starts, due largely to the events that occurred within California's energy markets, the process continues in many states with more or less successful results."[20] One of the main reasons for the spotty success of restructuring is the entrenched monopolistic nature of the industry, which has "… hindered innovation, demonstrated by the utility industry's stagnant efficiency."[20] Power generation efficiency in conventional steam turbine power plants is about 35%, and has not increased since the 1960's. This results in Americans paying "roughly $100 billion too much each year for heat and power."[20] In addition, power generation is the largest source of air and water pollution in the US, largely because they still use technology which has not substantially improved in more than 50 years.

Freedman and Watson further detailed the recent history of electric restructuring as follows:

The process of restructuring actually began in the late 1970s…, after Congress-approved the Public Utilities Regulatory Policies Act (PURPA) to advance energy efficiency. Section 210 of that law created the first competitive crack in the utility industry's monopoly structure… opening the door to the generation of electricity by power plants not controlled by utility monopolies. The legislation required utilities to purchase the extra electricity from independent power producers at a cost equal to that utilities' avoided cost of new capacity additions. PURPA

---

[19] Susan Freedman and Suzanne Watson. "Output-based Emission Standards: Advancing Innovative Energy Technologies." *Northeast-Midwest Institute.* Washington, D.C. 2003.

[20] Ref. 19, 9.

spurred the construction of co-generators, producing both heat and electricity from a single fuel source (CHP)…[20]

About 20 years later, new legislation was enacted to reduce barriers to competition in power generation and sale. Since then, about half of the states have taken steps, either though restructuring legislation or regulations, to encourage a more competitive atmosphere. One of the ways this has been done is through the development of output-based initiatives. Examples are described in detail by Freedman and Watson:

Restructuring legislation in Massachusetts, New Jersey and Connecticut called for the development of output-based (performance-based) standards for retail electricity suppliers if certain criteria are met. Massachusetts and New Hampshire also have set output-based regulations targeting emissions reduction from their dirtiest power plants. Texas has created a permit system for distributed generation systems on an output basis that also allows credit for recovered heat in CHP. In contrast, states that have avoided restructuring have also ignored output-based standards, leading to the conclusions that without being encouraged to restructure, states may not take steps to address high power-plant emissions and utilities will resist changes that highlight the status quo's inefficiencies and waste.[21]

Clean Air Act

The Clean Air Act (CAA), created in 1970 and reauthorized in 1977, regulates air emissions from a wide range of sources including centralized power generation facilities. As with many cases of far-reaching legislation, there are some adverse unintended consequences.

In the case of the CAA, one of these is engendered in the New Source Review (NSR) provisions, which unintentionally tend to impede the installation of some energy-efficient technologies such as CHP. NSR" includes two pre-construction permit programs governing the construction of new or modified major stationary sources."[22] But NSR's 'grandfather clause' … allows less efficient plants (those built prior to 1977) to avoid the costs associated with more stringent environmental regulation and permitting."[23] This is because the installation of equipment that increases plant output, even if the increase is brought about by higher efficiency, triggers the implementation of an NSR, an expensive and time-consuming activity for facility managers. CHP systems fall into this category.

Input- versus Output-based Standards

Another CAA provision which impedes innovative energy-saving technologies is emissions regulations on a fuel input rather than a power output basis. This does not encourage energy efficiency. As Freedman and Watson point out, "… the BACT and LAER regulations set targets independent of a system's efficiency, which allows a less-efficient system to burn more fuel and

[21] Ref. 19, 10.

[22] Ref. 19, 11.

[23] Ref. 19, 10.

emit more pollution."[24] As a result, "… power companies usually try to reduce emissions at the 'end of the pipe' by installing pollution control equipment [that] … increases a plant's costs and further lowers its efficiency. Output-based standards, which determine emissions based on electricity generated, offer a more flexible and effective means to reduce emissions at the front end of the process."[25] In 1999-2000, the US EPA created a *stakeholder working group* to assess the feasibility of and create an approach for output-based NOx allowances.[26] Some states, such as Connecticut, have begun to amend their NSR regulations" to credit the thermal output of CHP applications, in order to recognize a power system's efficiency."[27] California has planned to introduce stringent NOx limits for CHP based on MW output, including both electrical and thermal output.

In the same vein, EPA revised New Source Performance Standards (NSPS) in September 1998 for NOx emissions " from a heat input basis to an electrical output basis in order to promote energy efficiency."[28] The output-based standard is expressed in terms of weight per unit output energy. The NOx emission limit in the final rule for newly constructed units is 1.6 lb/MWh gross energy output, regardless of fuel type. But for existing sources, as of this writing, the NOx emission limits are still regulated on an input basis.[29]

In the current structure, a plant that is more efficient and emits less pollution in NOx is treated equally with a less-efficient plant that emits more pollution in NOx because they generate the same amount of electricity. In an output-based structure, the less-efficient plant would have to reduce emissions by making the plant more energy efficient, switching to a less-polluting fuel, or by running the plant less. With the old input-based structure, "Regulations … do nothing to credit a facility for using energy more efficiently in production. Lower emissions and lower fuel use of highly efficient plants, like CHP, go unrecognized."[30] Output-based standards "encourage energy efficiency by directly registering the emissions impact of a change in efficiency. … Thus, the output-based standard provides a built-in market incentive for efficiency."[31]

NOx Trading as a Tool for Emissions Reduction

Another approach to reducing NOx emissions is the establishment of an emissions trading mechanism. The US EPA has established a program for NOx emissions trading, mainly in the Northeast and Mid-Atlantic States, to help alleviate air quality problems in those areas. Freedman and Watson elaborate as follows:

---

[24] Ref. 19, 11.

[25] Ref. 19, 10

[26] Ref. 19, 11.

[27] Ref. 19, 11.

[28] Ref. 19, 12.

[29] Ref. 19, 13.

[30] Ref. 19, 12.

[31] Ref. 19, 12.

In May 2000, the EPA released a guidance document for states joining the NOx Budget Trading Program under the NOx state implementation plans (SIP) Call. The document assists states in determining whether to use output-based NOx allocations for their SIP as part of the NOx SIP Call. The guidance describes options for developing NOx allowance allocations for power plants, industrial boilers, and turbines using electric and thermal output. The guidance also provides sample regulatory language for state environmental agencies to use. Some states have followed this guidance and adopted output-based standards for their NOx Budget Programs, including Massachusetts, New Hampshire, and New Jersey.[32]

Current NOx Emission Control Techniques

A major contributor to ground-level ozone and smog problems is NOx from fuel combustion in both mobile and stationary sources. Two major approaches are used for NOx control: (1) reducing its formation in the combustion process, or (2) removing it by means of "end-of-pipe" flue gas treatment. Methods for modification of the combustion process for NOx reduction include flue gas recirculation, combustion staging, very lean combustion, and steam or water injection. The second approach, which can be combined with the first for deepest NOx reduction, employs "industrially accepted technologies, such as selective catalytic reduction (SCR) or selective non-catalytic reduction (SNCR), and emerging technologies, such as absorption/catalytic systems. [33]

SCR, which uses an ammonia or urea injection to reduce NO to elemental N2 in the presence of a catalyst, is currently the preferred end-of-pipe technology to meet the most stringent NOx regulations for boilers, simple-cycle gas turbines, and gas turbine CHP systems. NOx removal effectiveness can approach 90%. "However," relates Harbison, "concerns have been raised related to secondary emissions of ammonia reagent (ammonia slip), the handling and storage of reagents, process control at variable flow rates, NOx concentration and temperature, and high equipment and control system costs."[34]

SNCR is based on similar chemistry of NOx reduction with ammonia, but omits the catalyst. Although this is an advantage, SNCR is not currently as widely specified as SCR, because NOx removal levels are lower (30-70 percent) and "in order to achieve a high NOx reduction, the gas mixture must be kept within a relatively narrow and high temperature range."[35]

Recently, hybrid SCR/SNCR systems have been proposed to overcome some of the drawbacks of both methods. Harbison reports, "By combining the two technologies, improvements can be seen in chemical and catalyst use, making the hybrid combination often more flexible and effective than the sum of its parts. A hybrid system uses lower temperature SNCR injections to

---

[32] Ref. 19, 12.

[33] Harbison, Gordon. "Environmental Controls: Understanding and Controlling NOx Emissions." *Ceramic Industry:* 1 Feb 2002, 2.

[34] Ref. 33, 4.

[35] Ref. 33, 4.

provide improved NOx reduction while generating higher ammonia slip. The residual ammonia slip is the reagent for a smaller SCR reactor that removes the slip and reduces NOx while limiting the costs associated with a larger catalyst volume."[36] However, the hybrid system design imposes additional complexity on the system engineering and operation.

Alternatively, the POGT-based CHP technology under development by GTI will provide NOx below 2 ppmv (ref 15% percent oxygen) without any post-combustion treatment. This level of NOx reduction cannot currently be achieved by any other non-catalytic system.

Overview of Existing CHP Markets

Commercial/Institutional Sector

A study published by the Energy Information Agency (part of U.S.DOE) EIA in 1999 reported a total of 4.6 million commercial buildings in the United States, [37] and the previously cited OSEC report indicated that all United States commercial buildings in 2000 used 5.3 x 10^{15} Btu (5.3 quads) of energy, approximately half of which was electricity.[38] In this sector, according to the same study, there were over 980 operating CHP facilities in the commercial/institutional sector producing an estimated 29 billion kWh (0.10 quads) of electricity and 0.15 quads of thermal energy, for a total of 0.25 quads. So, per the OSEC report, "… as of 2000, CHP met 3.8% of the total energy needs of the commercial sector as a whole, while it is sited in only 0.02% of the total number of commercial buildings. … Both of these penetration rates are much lower than those found in the industrial sector, which is nine times the CHP penetration as in the commercial sector."[39] This may be partly because, although the commercial and industrial sectors consume about the same amount of electricity, the commercial sector only consumes about 20% as much fuel.[40] This definitely impacts the attractiveness of current CHP systems based on off-the-shelf technologies.

A major potential user of CHP technologies in the institutional sector is the federal government. A 2002 DOE report[41] noted that 9% of large federal facilities—including all military branches, the DOE, Veterans Affairs, and Justice, NASA, the General Services Administration, and the Postal Service—are suitable candidates. The total CHP capacity potential is estimated at 1,590 MW electric. CHP implementation in these sites would save 50 trillion Btu of primary energy

---

[36] Ref. 33, 4.

[37] "Commercial Buildings Energy Consumption Survey, 1999." *US DOE, Energy Information Administration,* Washington, D.C. 2003.

[38] Ref. 3, 2.

[39] Ref. 3, 2.

[40] Hedman, B.A. "The Market and Technical Potential for Combined Heat and Power in the Industrial Sector." *Final report prepared by Onsite Sycom Energy Corporation(OSEC) for the US DOE Energy Information Administration.* Jan 2000.

[41] "CHP Potential at Federal Sites", US Department of Energy Office of Energy Efficiency and Renewable Energy. Sep 2000.

and reduce utility costs by $170 million. The most attractive types of Federal buildings were identified as hospitals, industrial, and R&D facilities.

Fuel Type

Data in this section are quoted from Reference 3, page 3 and Reference 40, page 17.

Natural gas is by far the most common fuel type comprising over 72% of the total (3,547 MW). The next most important fuel type is waste (655 MW). Waste includes a variety of fuels but is dominated by landfill gas and biogas from sewage treatment facilities. Coal (441 MW), oil (111 MW), wood (47 MW), and other fuel types (125 MW) make up the remaining 15% of installed CHP capacity.

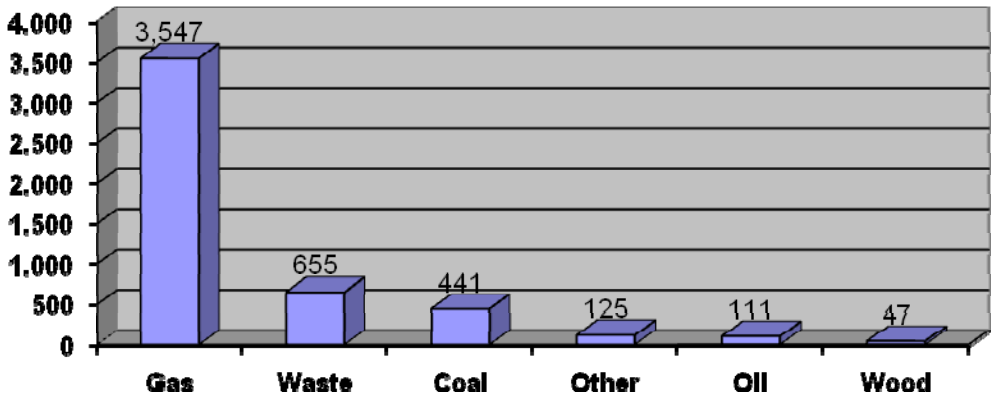

Figure 2. Existing Commercial Sector CHP Capacity by Fuel Type (MW)

Source: gas Technology Institute

Error! Reference source not found.shows how capacity, number of units, and average unit size are distributed among the principal types of prime mover. Units smaller than and larger than 20 MW are tabulated separately. The average size for CHP in all operating commercial sectors is 5 MW and the total capacity is slightly less than 5 GW. Over 70% of the existing facilities are under 1 MW. Most of these small systems are powered by reciprocating engines.

Table 1. Commercial Sector CHP by Prime Mover

Source: Gas Technology Institute

LESS THAN 20 MW

Prime Mover	Capacity (MW)	Share %	Sites	Avg. Size (MW)
Combined Cycle	22	2	3	7.4
Boiler/Steam	217	19	36	0.5
Combustion Turbine	402	35	91	4.4
Recip. Engine	459	41	768	0.7
Other/not specified	36	3	19	1.9
Total	1,136	100	917	1.2

GREATER THAN 20 MW

Prime Mover	Capacity (MW)	Share %	Sites	Avg. Size (MW)
Combined Cycle	2,088	56	24	87.0
Boiler/Steam	1,124	30	24	46.8
Combustion Turbine	531	14	13	40.9
Recip. Engine	46	1	2	23.2
Other/not specified	0	0	0	0.0
Total	3,789	100	63	60.1

While the number of sites is dominated by the smaller sized systems, the total capacity impact of these small systems is comparatively small. The majority of the CHP capacity comes from the smaller number of large systems. There are 63 sites with capacities greater than 20 MW – including combustion turbine, combined cycle, and boiler/steam systems. These 63 large sites make up 77% of the existing commercial sector CHP capacity.

In the commercial/institutional sector, the most widely used CHP configuration (43% of capacity) is the combined cycle power plant comprising a gas turbine, a HRSG, and a back pressure or extraction steam turbine. This configuration delivers high efficiency, but is also capital intensive and so is typically used only in relatively large installations (78 MW average), with only 3 of 27 sites below 20 MW in size.

Boilers with steam turbines make up 27% of total commercial/institutional CHP capacity. Boilers can fire any fuel type, but they are the only type of technology today that can be used to generate power from solid fuels like coal, wood, and certain types of solid waste. The average size for this type of CHP in this sector is 22 MW.

Combustion turbines coupled with a HRSG to generate steam for heating and other facility uses make up about 19% of installed capacity. Both combined cycle and combustion turbines are technically capable of burning a variety of gaseous or liquid fuels, but in US CHP applications they nearly always fire natural gas. The average capacity for gas turbine-HRSG CHP units in this sector is 9 MW.

Reciprocating engines make up 10% of capacity but represent 79% of the total number of installations. Reciprocating engines are commonly used in smaller installations; the average size for operating engine CHP systems is 700 kW.

Type of Application[42]

The OSEC study (Reference 3) defines the commercial/institutional sector as "comprised of a broad range of activities that include private and government services but not including manufacturing, mining, or agriculture." The commercial sector is predominantly thermal load limited and tends to be highly seasonal. Another feature of commercial applications is the more limited hours of operation compared to an industrial process operation. An office building may operate 3,500 hours per year compared to a refinery that is operated continuously, or 8,760 hours per year. High and fairly constant thermal loads and a high number of operating hours per year characterize the commercial applications that are favorable to CHP.

The following top eight applications represent 90% of the commercial sector CHP:

- Colleges and Universities – This is a top commercial CHP application, with 29% of the total installed capacity. Universities resemble district-heating systems for small cities. CHP systems typically serve the power and thermal needs of a multi-building site.
- District Energy/Utilities – About 20% of the total is for district energy or utility applications. These systems tend to be large, multi-megawatt facilities serving a variety of applications and buildings.
- Government – Government use represents a broad range of activities and commercial/institutional buildings.
- Hospitals – Hospitals are large facilities with around-the-clock operation and large, steady thermal and electric requirements. They typically have engineering and operating staff on-site to manage a CHP system.
- Solid Waste – This is not necessarily a building energy application but reflects waste to energy projects with some form of heat recovery.
- Offices – This is one of the largest types of commercial applications in terms of building space.
- Airports – Nine major airports have CHP systems to serve multiple buildings. These systems are generally in the multi-megawatt size range.
- Health/Sports Centers – Rounding out the top 90 percent of commercial applications are health clubs and sports centers. These facilities represent a good match of steady electric and thermal loads.

Commercial/Institutional CHP Distribution by State[43]

Hedman describes the geographical distribution of US commercial/institutional CHP units thus:

Commercial CHP is concentrated in the populous industrialized states of the Northeast, Midwest, California, and Texas. In addition to large population and economic activity, these states typically have higher energy costs than the rest of the US. Nearly half the total installed

[42] Ref. 3, 5

[43] Ref. 3, 6.

capacity is in three states – New York, California, and Pennsylvania. Adding in the next five largest states – Texas, Wisconsin, Michigan, New Jersey, and Florida – brings the cumulative share up to 75%.

Industrial Sector

According to Hedman (Reference 40), US industries had 1,016 CHP facilities with a total electrical capacity of 45,500 MW and an estimated co generated steam capacity of 225 million lb/h. Manufacturing industries represented 44,242 MW at 980 sites (216,000 million Btu/hour steam capacity). Major conclusions from the database are detailed below.

Existing capacity is concentrated in a few industries[44]

The distribution of CHP capacity among major industrial sectors is shown in Figure 3. The chemicals, pulp and paper, and petroleum refining sectors account for "more than two thirds of the total electric and steam capacities at existing CHP installations." The only manufacturing industries that did not appear in the Hedman report to utilize CHP are "apparel manufacturing and leather/tanning".

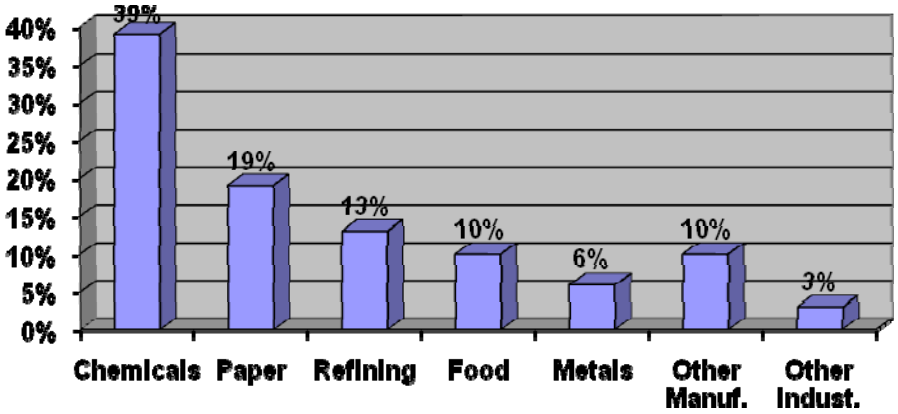

Figure 3. Industrial Institute

Source: Gas Technology Institute

Existing CHP Depends on a Variety of Technologies and Fuels

As in the commercial/institutional sector, natural gas is the fuel of choice for industrial CHP installations, accounting for 61.3% of capacity.[45] However, coal, wood, and process wastes are "used extensively by many industries (16.7 percent, 5.1 percent, and 7.1 percent respectively)." **Error! Reference source not found.**4 shows how the major CHP types are distributed in industrial sites. Combined cycle units predominate, accounting for 51% of installed capacity, and together with gas turbine-HRSG applications accounting for another 11%, the combustion turbine share totals 63%. Gas turbine systems are used by almost all industry segments. The

[44] Ref. 40, 17-18.

[45] Ref. 40, 17-18.

next largest share for the industrial sector is boiler-steam turbine combinations, accounting for 36% of capacity and "concentrated in paper, chemicals, and primary metals industries." Reciprocating engine CHP units show up in 16% of industrial sites but account for only 2% of capacity. CHP units based on reciprocating engines are concentrated in the "food, chemicals and fabrication and equipment industries."

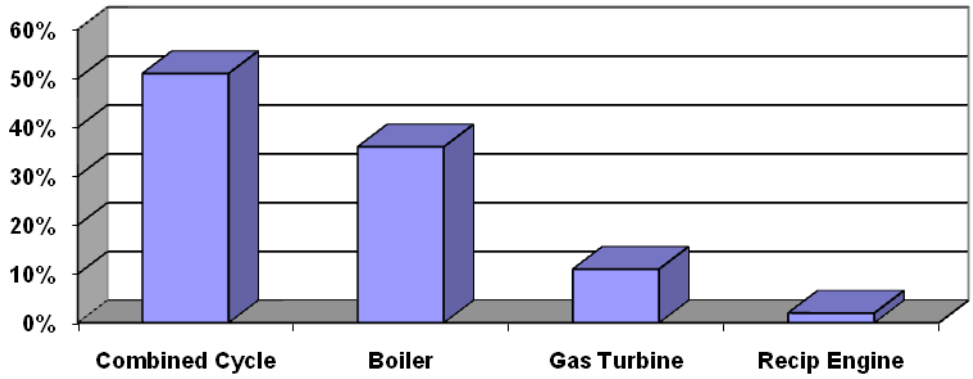

Figure 4. Industrial CHP Capacity by Technology

Source: Gas Technology Institute

According to the OSEC study, there is great variation in site electrical capacity at existing industrial CHP facilities; however, 80% of existing capacity is represented by facilities of 50 MW and greater. Two thirds of the coal is used in systems over 100 MW size. Reciprocating engines predominate in facilities below 1 MW, and are used extensively in facilities up to 5 MW. Combined cycle systems dominate the larger facilities.

Existing and Planned CHP Installations

The US EPA has reported a total CHP capacity of 65.9 GW at 2,439 sites, broken down by sector as shown in **Error! Reference source not found.**5.[46]

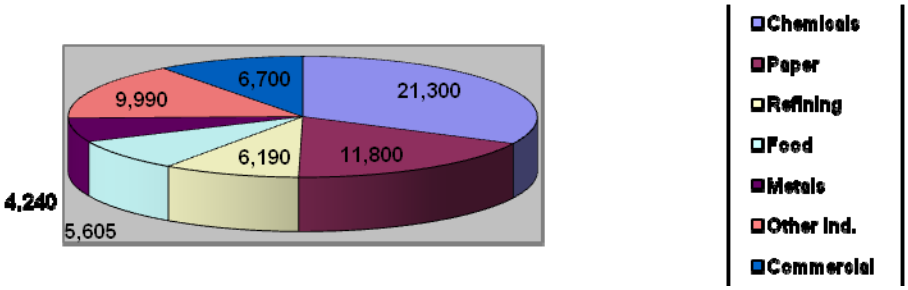

Figure 5. Existing CHP Installations by Sector (2000 data)

Source: Gas Technology Institute

[46] Luis Troche. "Market Development." (presentation) *EPA CHP Partners Meeting*. 29 Apr 2003, 9.

More detailed information is available from the commercial Platt's PowerDAT database, which lists existing and planned CHP installations by location, contact information, seasonal CHP capacity, fuel mix, type of prime mover, and other categories for facilities in North America (US, Canada, and northern Mexico). Sample output from this database is shown below:

Plant Name	NERC Region	Prime Mover	Unit #	Unit Status Code	Primary Fuel Type	Summer Capacity	Winter Capacity	Online Year	Cogen Facility (Y/N)	Self-Gen (Y/N)	Grid Connect (Y/N)
FPB Cogen	WECC	CC	CC	OP	NG	28.28	32.88	1983	Y	N	Y
Fairfield Works	SERC	ST	GEN1	SB	GAS-O	20	20	1928	Y	Y	Y
Etc. …											

Market Potential

The potential for future CHP markets was evaluated from the Zapdata database, which includes information on economic activity, location, and size for commercial, institutional and industrial facilities.[47] Because of their similarity with respect to energy use, commercial and institutional markets are combined in the following discussion, and industrial markets are treated separately. Previously cited OSEC reports [3,40] were also used to confirm the study conclusions.

Commercial/Institutional Markets

Hotels and Motels (SIC code 7011)

This category includes commercial establishments known to the public as hotels, motor hotels, motels, or tourist courts and includes hotels operated by membership organizations and open to the general public.

Market size:

- Estimated number of U.S. establishments: 86,569
- Total number of people employed in this industry: 1,948,126
- Average numbers of employees per establishment: 23
- Total annual sales in this industry: $210,958 million
- Average sales per establishment: $3.5 million

General Medical and Surgical Hospitals (SIC code 8062)

This category includes establishments primarily engaged in providing general medical and surgical services and other hospital services. Hospitals were also identified by the US EPA as an attractive market for CHP installations.[48] The EPA presentation noted that hospitals have

[47] Zapdata Database, Dun & Bradstreet/Marketing Solutions, August 2003.

[48] Luis Troche. "Market Development." (presentation) EPA CHP Partners Meeting. 29 April, 2003, 9.

significant and steady thermal and electric loads, and electric to thermal ratios are compatible with CHP technologies (0.8 to 1.0), with 24-hour/7-day operation. This market has moderate experience with CHP: 538 MW at 136 sites (83 reciprocating engines, 35 gas turbine systems, 12 boiler/steam turbine systems and 6 fuel cells). However, there is significant potential for additional CHP, since there are 5,800 hospitals nationwide with 5,000 to 8,000 MW potential CHP capacities (28 percent in the Midwest, 15 percent in the Northeast). The hospital market has experience with absorption cooling and steam plants. There are current regional initiatives by the city of Chicago, the state of Illinois, and the Midwest CHP Application Center.

Market size:

- Estimated number of US establishments: 12,391
- Number of people employed in this industry: 4,292,445
- Average number of employees per establishment: 346
- Total number of sales in this industry: $517,678 million
- Average sales per establishment: $94.8 million

Elementary and Secondary Schools (SIC Code 8211)

These are elementary and secondary schools furnishing academic courses, ordinarily for kindergarten through grade 12. Included in this business are parochial schools and military academies furnishing academic courses for kindergarten through grade 12, and secondary schools that furnish both academic and technical courses. The use of CHP in schools is primarily for electricity, space heating, and space cooling with the possibility of steam for food services in some cases.

Market size:

- Estimated number of US establishments: 138,491
- Number of people employed in this industry: 6,100,078
- Average number of employees per establishment: 44
- Total number of sales in this industry: $341,975 million
- Average sales per establishment: $7.6 million

Colleges and Universities (SIC Code 8221)

This category includes colleges, universities, and professional schools furnishing academic courses and granting academic degrees. Colleges and universities, as with other schools, use CHP heat primarily for space heating, space cooling, and food services, along with special uses of steam in laboratories or other technical uses.

Market size:

- Estimated number of US establishments: 18,540
- Number of people employed in this industry: 2,430,477
- Average number of employees per establishment: 131

- Total number of sales in this industry: $176,572 million
- Average sales per establishment: $38.9 million

Correctional Institutions (SIC code 9223)

This category includes government establishments primarily engaged in the confinement and correction of offenders sentenced by a court. It does not include private establishments engaged in the confinement and correction of offenders or halfway houses for ex-convicts or homes for delinquents. Potential uses of CHP heat include space heating, laundry, food services, and on-site medical facilities.

Market size:

- Estimated number of U.S. establishments: 6,029
- Number of people employed in this industry: 454,739
- Average number of employees per establishment: 75
- Total number of sales in this industry: $391 million
- Average sales per establishment: $0.7 million

Others

Several smaller but still significant CHP markets include commercial laundries, car washes, health clubs, country clubs, museums, and waste treatment/sanitation facilities.

Conclusions

Significant CHP potential exists at commercial/institutional facilities, since market penetration of CHP into this sector is fairly low. The bulk of existing CHP capacity is in larger systems of 20 MW or greater (63 percent of existing capacity), so the majority of the remaining technical potential is in smaller size systems. Based on existing technology, about 5% of the existing commercial buildings in the United States meet the technical criteria for CHP (average electric demand >100 kW and adequate thermal loads in the form of hot water or steam). The new, more flexible POGT-based CHP under development by GTI may expand the available markets because of its unique ability to adjust power-to-heat ratios.

The selected potential commercial/institutional markets for CHP are summarized in

based on number of establishments, approximate system size range, and typical heat uses. The total, installed, and remaining CHP potential for these markets are shown in

.

Table 2. Selected Potential Commercial/Institutional Markets for CHP

Application	Total Establishments	CHP System Size	Thermal Demand
Hotels/Motels	83,449	100 kW - 1+ MW	Hot water, space heating, pools
Hospitals	12,167	300 kW - 5+ MW	Hot water, space heating, sterilization, laundry
Schools	137,194	50 - 500 kW	Hot water, space heating, pools
Colleges/Universities	17,503	300 kW - 30 MW	Hot water, centralized space heating, pools
Commercial Laundry	4,300	100 - 800 kW	Hot water, steam
Car Washes	25,831	100 - 500 kW	Hot water
Health Clubs/Spas	22,582	50 - 500 kW	Hot water, space heating, pools
Country/Golf Clubs	29,872	100 kW - 1 MW	Hot water, space heating, pools
Museums	14,186	100 kW - 1+ MW	Hot water, space heating
Correctional Facility	5,442	300 kW - 5MW	Hot water, space heating
Treatment/Sanitation	8,350	100 kW - 1 MW	Process heating
TOTAL	360,876		

Table 3. Summary of Potential CHP Capacity in Selected Commercial/Institutional Markets

Application	Total Potential (MW)	Installed CHP (MW)	Remaining Potential (MW)
Hotels/Motels	6,703	30	6,673
Hospitals	8,878	491	8,387
Schools	14,884	14	14,870
Colleges/Universities	4,250	1,414	2,836
Commercial Laundry	485	3	482
Car Washes	281	0	281
Health Clubs/Spas	3,552	164	3,388
Country/Golf Clubs	2,208	0	2,208
Museums	398	4	394
Correctional Facility	2,721	135	2,586
Treatment/Sanitation	949	141	808
TOTAL	45,309	2,396	42,913

Industrial Markets

Paper and Allied Product Manufacturing (SIC code 26)

Wood and paper industries provide materials essential for communication, education, packaging, construction, shelter and sanitation. Industries are in the paper and allied products group; process wood, recycled paper, and cellulose fibers into a wide variety of paper, paperboard and particleboard. The paper industry has three major sub-sectors, including pulp mills, paper mills, and paperboard mills.

Market size:

- Estimated number of US establishments: 14,816
- Number of people employed in this industry: 766,954
- Average number of employees per establishment: 52
- Total sales revenue in this industry: $118,975 million
- Average sales per establishment: $12.5 million

Chemicals and Allied Product Manufacturing (SIC code 28)

The chemical industry produces chemicals that provide the raw materials for industry, agriculture, construction, mining and medicine. Chemical products can be grouped into three major categories: basic chemicals (acids, alkalis, salts, organics), intermediate chemicals (synthetic fibers, plastic materials, color pigments), and finished chemicals (paints, fertilizers, explosives).

Market size:

- Estimated number of US establishments: 33,438
- Number of people employed in this industry: 1,452,122
- Average number of employees per establishment: 47
- Total sales revenue in this industry: $1,243,806.9 million
- Average sales per establishment: $57.2 million

Food and Kindred Product Processing (SIC code 20)

The food processing sector produces a huge variety of products with over 50 SIC sub-categories. Energy end use is primarily for material handling, cooking, freezing and refrigeration.

Market size:

- Estimated number of US establishments: 42,646
- Number of people employed in this industry: 1,800,969
- Average number of employees per establishment: 42
- Total sales revenue in this industry: $900,792 million
- Average sales per establishment: $31.5 million

Primary Metals Industry Manufacturing (SIC code 33)

This category includes aluminum, steel, copper and other primary metals manufacturing, although thermal demand at aluminum plants is relatively minor. Steel mills have large thermal demands including steam for mechanical steam drives.

Market size:

- Estimated number of US establishments: 15,688
- Number of people employed in this industry: 915,154
- Average number of employees per establishment: 58
- Total number of sales in this industry: $323,009 million
- Average sales per establishment: $28.1 million

Others

Other industrial markets for which but which are significant opportunities for CHP include textile mill products, rubber and plastics, and metals fabrication. Detailed data were not available in Zapdata for these sectors. In addition, EPA has identified[49] attractive markets for CHP installations in ethanol production and dairy products.

Ethanol production (dry corn milling) electric and steam profiles are a good match with CHP. A typical CHP system in this industry would be between 2 and 6 MW, with 8,760-hour operation. Production capability in this market is expected to grow substantially, with shipment growth of 30% between 1997 and 2000. This market is also economically healthy in terms of margin and capital expenditures. Margins grew 56% and capital investments grew 56% between 1997 and 2000. However, there are a limited number of plants (less than 75 currently existing, with 35 in the planning stages), with 50% concentrated in the Midwest. Energy costs are 11% of total material costs in this market. Plants have limited experience with CHP.

Dairy products are processed in facilities where the electric to thermal ratios are compatible with CHP technologies (between 0.6 and 1.0). There are significant steam and hot water loads for processing and sanitary wash, and electricity for processing and storage. The market is healthy in terms of margin and capital expenditures, and is somewhat cyclical. Average annual growth is 2.4%, and the margin between cost and revenue is 23%. Energy expenditures are greater than $600 million annually. This market has some experience with CHP (340 MW at 16 sites. Ten use a reciprocating engine, four use a gas turbine, one uses a boiler/steam turbine, and one uses a fuel cell). The overall penetration of CHP in this market is low, with 1,500 facilities nationwide (45 percent situated in the Midwest and 21 percent situated in the Northeast).

Conclusions

Over 90% of existing CHP capacity in the industrial market is represented by systems of 20 MW or greater. Existing CHP capacity represents over 45% of total CHP potential in this size range.

---

[49] Luis Troche. "Market Development." (presentation) EPA CHP Partners Meeting. 29 April, 2003.

The estimated technical potential for CHP at existing manufacturing facilities is approximately 132,000 MW, based on data from OSEC. Approximately 44,000 MW of CHP capacity is already in place at existing manufacturing facilities, leaving a remaining CHP potential of between 75,000 and 100,000 MW for the manufacturing sector.

Fifty-five percent of the remaining industrial CHP potential is in system sizes of 20 MW or greater. Forty-five percent of the remaining CHP potential (over 39,000 MW) is in system sizes of less than 20 MW. Thirty-two percent of the remaining potential is in system sizes of 4 MW or less. Market saturation in these smaller size categories is very low (7% for systems less than 20 MW, 1% for systems less than 4 MW).

Much of the remaining potential is found in those industries that have traditionally relied on CHP. Two-thirds of the remaining CHP potential is in five industries: food, paper, chemicals, refining, and primary metals. Paper in particular has the largest amount of remaining CHP potential, accounting for 26,000 MW of the total remaining potential. However, significant remaining potential exists in industries such as textiles, rubber and plastics, metal fabrication and equipment, ethanol production, and dairy products. These industries have not aggressively implemented CHP thus far.

The selected potential industrial markets for CHP are summarized in **Error! Reference source not found.** based on number of establishments, approximate system size range, and typical heat uses. The total, installed, and remaining CHP potential for these markets are shown in **Error! Reference source not found.**.

Table 4. Selected Potential Industrial Markets for CHP

Application	Total Establishments	CHP System Size	Thermal Demand
Paper Manufacturing 26	14,816	2 MW – 100+ MW	Steam, hot water, hot air
Chemicals Manufacturing 28	33,438	250 kW – 50+ MW	Steam, hot water
Food Processing 20	42,646	100 kW – 50 MW	Steam, hot water, hot air, cooling
Primary Metals 33	15,688	1 MW – 60+ MW	Steam, hot water
Textile Mill Products	14,136	N/A	Steam, hot water
Rubber and Plastics	25,869	N/A	Steam, hot water, hot air
Metals fabrication	71,585	N/A	Steam, hot water
Ethanol production*	110	2 MW – 6 MW	Steam, hot water
Dairy products	1,500	20 MW average	Steam, hot water
TOTAL	219,788		

* Number of establishments includes 35 in planning stage

Table 5. Summary of Potential CHP Capacity in Selected Industrial Markets

Application	Total Potential (MW)	Installed CHP (MW)	Remaining Potential (MW)
Paper Manufacturing	34,751	8,553	26,198
Chemicals Manufacturing	27,132	17,692	9,440
Food Processing	12,680	4,594	8,086

Primary Metals	9,814	2,873	6,941
Textile Mill	3,777	651	3,126
Rubber and Plastics	4,413	787	3,626
Metals Fabrication	5,726	78	5,648
TOTAL	98,293	35,228	63,065

Market Forecast

There appear to be no reliable published estimates that provide a forecast of market potential for CHP technologies. However, data in this section obtained from a compilation by the *Association of Energy Engineers (AEE)* does provide some insight into trends that could affect adoption of CHP and related technologies.[50]

The AEE surveyed its members on trends impacting the future of the energy marketplace. The 436 participants' responses in the comprehensive survey provided important information as to the future of CHP.

Question 1: How effective is your energy and cost reduction program this year as compared to a year ago?

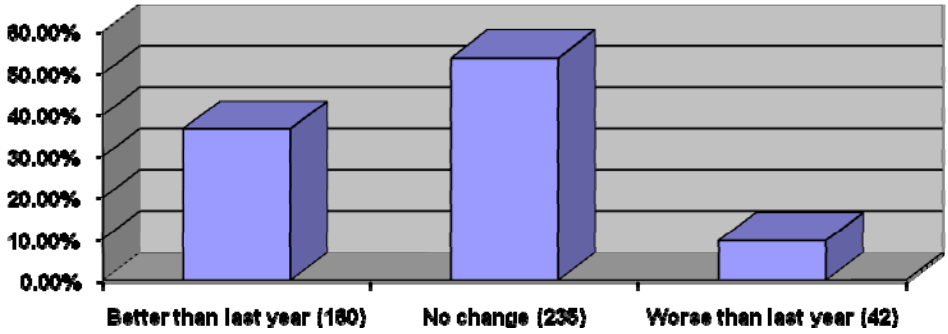

Question 2: Which technology listed below is the highest priority for application at your facility in the near future?

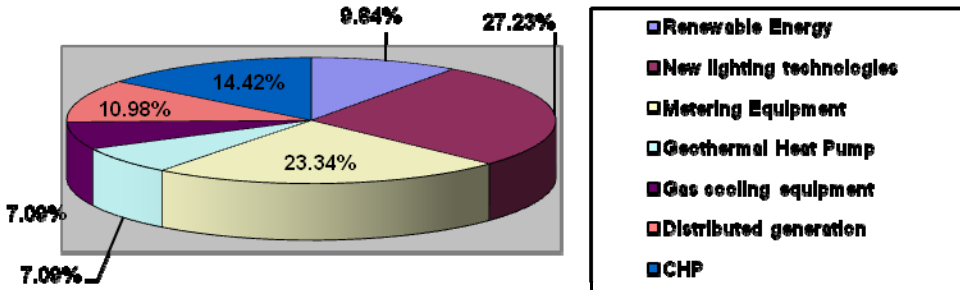

[50] "The Market Survey of the Energy Industry 2003," Assoc. of Energy Engineers (2003).

Question 3: Will distributed generation and cogeneration (CHP) become more important because of reliability and energy security issues?

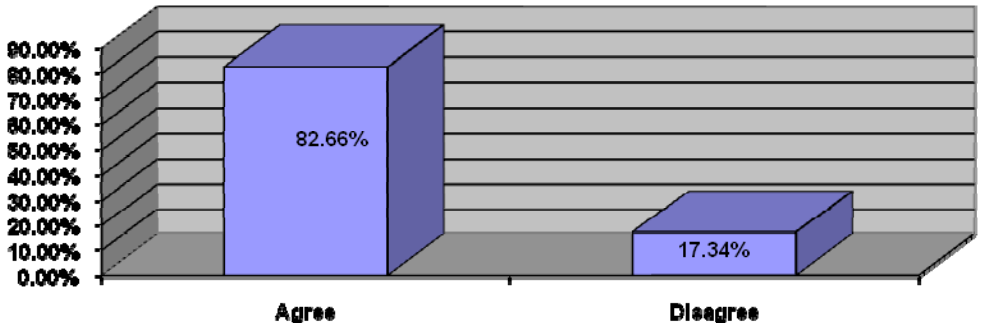

Question 4: Is your company planning to install a combined heat and power system?

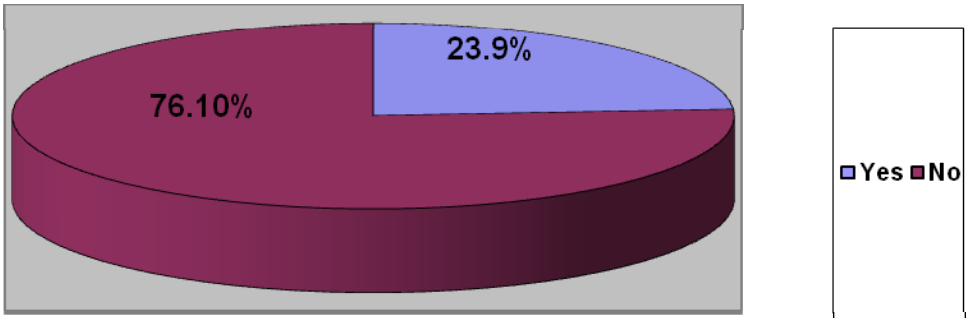

Question 5: If yes, when?

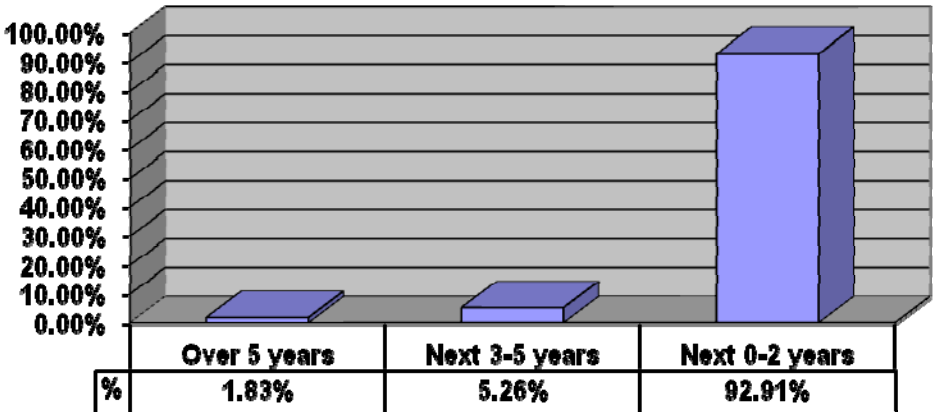

MMC Market Survey

Objective

The objective of the market survey by Modern Marketing Concepts (MMC) was to gauge interest in new gas turbine technology among suspected cogeneration facilities and to validate the viability of specific market segments believed to be well suited to the POGT concept. Approach was as follows:

- Identify a targeted list of suspected cogeneration facilities.
- Develop a survey/research tool to determine if targeted facilities are qualified and/or interested for the POGT technology.
- Attempt to complete the survey with 250 locations across various industries.

Targeted Markets

The markets that were perceived to be best suited for the POGT technology fell mainly in the education, healthcare, municipality and small industrial manufacturer's arenas.

Process and Methodology

MMC acquired a specific list of contacts that had titles congruent with a decision-maker in an operation manager's position. This list contained over 2,000 contacts that were sorted by industry for the targeted areas. The outbound campaign consisted of a two-part survey to create both a base profile as well as an extended profile for the final analysis.

A customized call guide was created to gather pertinent information for the base profile. The emphasis was on determining a level of interest in CHP as well as the overall energy needs of each facility. If it was evident that there was no interest, MMC attempted to obtain referrals for other contacts at the facility.

Specific information that was attempted to capture on the phone portion of the survey are below:

- Are you involved in decisions about the facility's investments regarding fuel supply and/or plant infrastructure?
- Does your facility currently operate as an Independent Power Provider(IPP)/Cogen?
- Does your facility currently operate an electric generator?
    - Is it continuous power generation?
    - If not, what is the duty cycle?
- Does your facility currently produce steam for sale to a host?
    - How would you categorize your typical steam users (industry)?
- Is part of your facility's system used to produce hot water?
- Do you use part of the exhaust heat to operate chillers?
- Does your organization have a goal or need to improve plant efficiency/NOx emissions?
    - Do you know what those goals for plant efficiency/NOx emissions are?

- Do you think that your facility would be interested in evaluating a new CHP system based on GTI's POGT that would offer 88% efficiency with ultra low NOx emissions (<0.006lb/MMBtu)?
- Is there any consideration to expanding, upgrading or installing (additional) CHP?
- What payback period would stimulate interest in a new CHP system?
- Do you operate other facilities that may be interested in CHP technology?

Based on participants' responses to the phone portion of the survey, MMC asked qualified prospects to complete a more in depth extended profile that would help GTI discern if the facility would be a good prospect for the POGT technology. The extended profile was made available as a Web survey, shown in Appendix A.

Results

During the course of the market survey, MMC attempted contact with 738 facilities. Of these facilities, we were able to make contact with a decision maker or influencer at 129 of them. A total of 43 facilities were willing to complete some or all of the survey. The remaining 86 were either not willing to complete the survey or not qualified to do so.

Of the 43 completed or partially completed surveys, the industries represented are as follows:

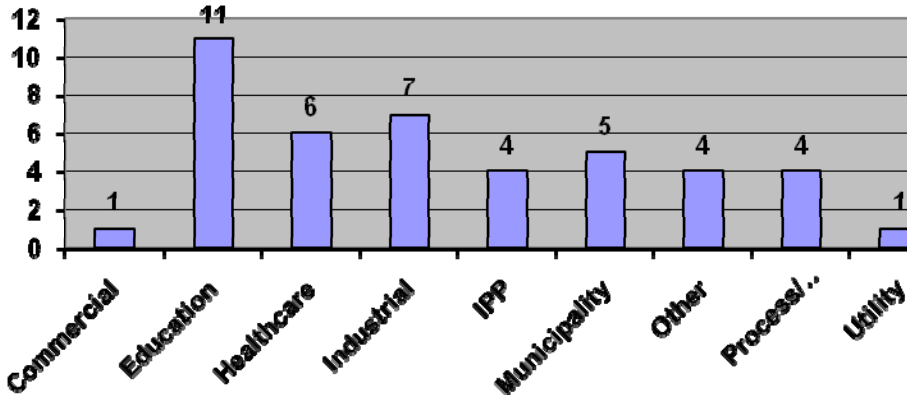

Figure 6. Breakdown of Industries Queried in Market Survey

Source: Gas Technology Institute

Of the 43 responses, a total of 18, or 41.8% were interested in hearing more about the POGT technology and how it could benefit them.

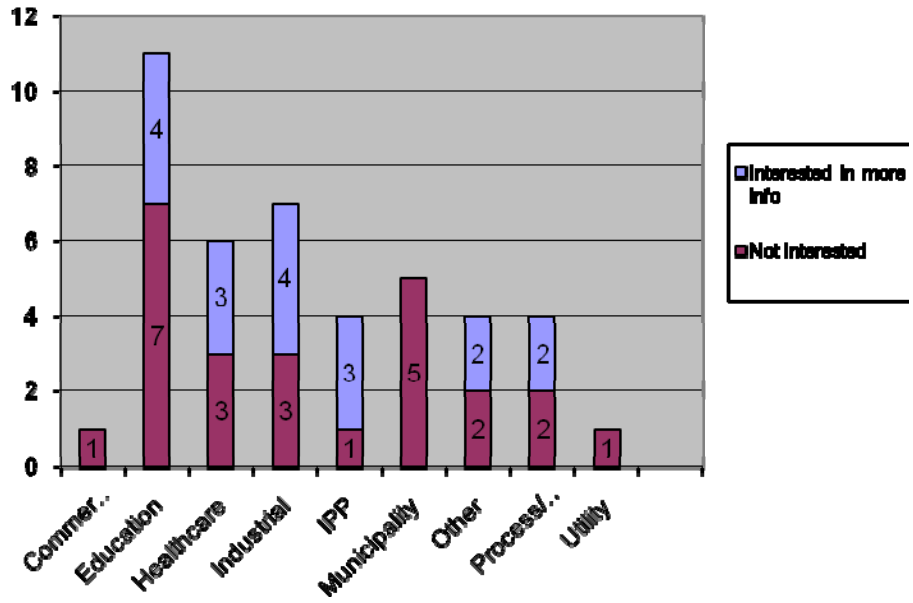

Figure 7. Respondents' Interest in POGT

Source: Gas Technology Institute

Another question of survey participants was whether they had any plans to install, expand, or upgrade CHP systems. Of the 42 responses, a total of 10, or 23.8% said they did. This data correlates well with the findings of the "Market Survey of the Energy Industry 2003" compiled by the Association of Energy Engineers, which found 23.9% of surveyed sites having plans to install or upgrade. The breakdown of plans by industry is shown below.

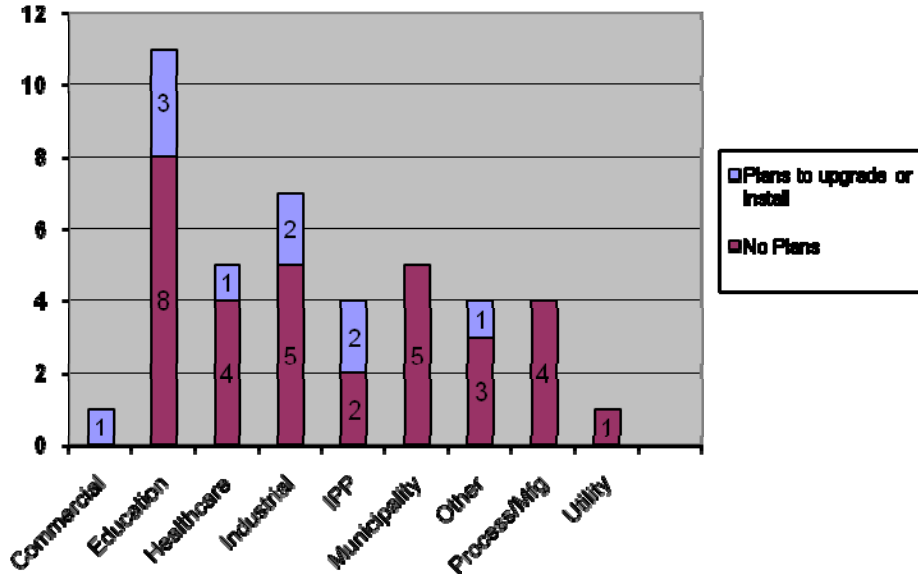

Figure 8. Plans to Install or Upgrade CHP

Source: Gas Technology Institute

2.1.2. Engineering Study

Partial Oxidation Gas Turbine Unit

POGT Conversion—Characteristics and Benefits

A POGT system is significantly different from a conventional gas turbine. POGT not only generates useful electric power, but in addition, produces low calorific fuel gas, commonly referred to as syngas, rich in hydrogen content. This capability to co-produce power and fuel gas distinguishes POGT from conventional technology. POGT produced syngas can be used as secondary fuel for production of hydrogen; production of steam or for process heating. POGT unique characteristics are summarized below:

- Co-production of electricity and hydrogen-enriched secondary fuel
- Reduction in air-compressor power compared to conventional gas turbine
- Low emissions of NOx because POGT produces exhaust gas containing CO and hydrogen which can be burned to produce very low NOx at low oxygen (3%) in the CHP boiler

POGT provides increased efficiency as evidenced by the fact that significantly less air is required in the overall operation (combustion in the POR and burnout in a boiler) when compared to a gas turbine (over 15% excess air in exhaust). Reduction in overall air flow required results in higher CHP system efficiency for a given power output.

Consequently, at a given power output, the air flow rate required under POGT mode of operation is lower than that of a standard gas turbine. This lower air flow reduces shaft compressor power expenditure requirements compared to conventional gas turbines. Conventional turbine compressor sections require about two thirds of the shaft horsepower produced. Figure 8 illustrates reduced compressor size for a POGT system. Alternatively, available air from the compressor in effect can be used to export more power or to improve the system efficiency or both.

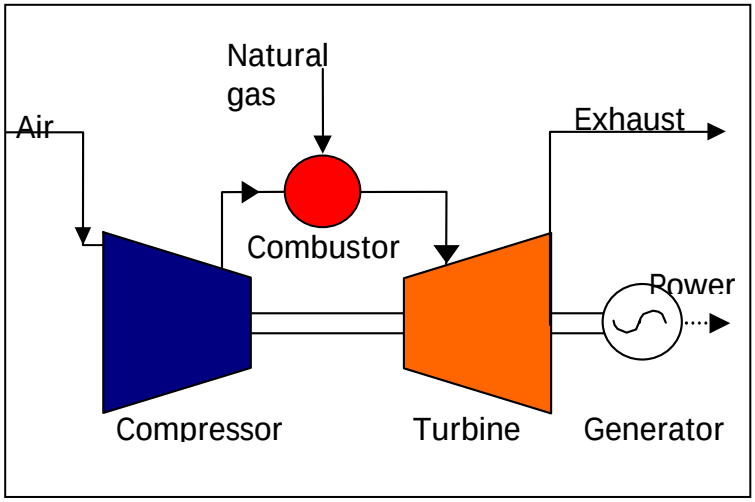

(a), Conventional Turbine System

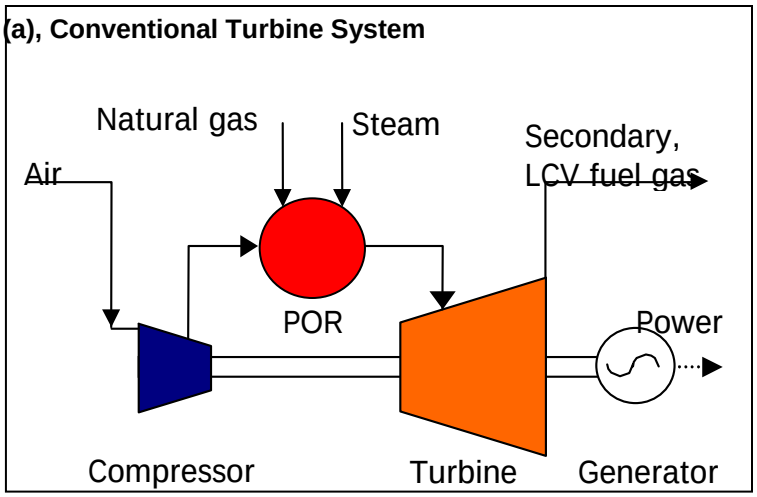

(b), POGT System

Figure 9. Comparison of Air Requirements: (a) Conventional Turbine System, compressor uses 2/3 of fuel energy; (b) POGT System, compressor power reduced by 50%.

Source: Gas Technology Institute

By controlling the fuel-to-air ratios and the flow rate of steam into the POR, the ratio of secondary fuel energy to the generated electrical energy can be varied. If only electrical power is required, very high conversion efficiencies can be obtained by utilizing high levels of steam injection. Typically these thermal efficiencies are in excess 50%. The relative merit of such a POGT compared to other gas turbine systems is shown above.

Not only does POGT have high efficiency, it also has a high specific power, power per unit mass flow, which means it may have a lower cost of manufacture. The "quality" or hydrogen content

of the secondary fuel can also be adjusted by varying steam and fuel flow rates. This is of great advantage when the production of syngas or hydrogen is the intended purpose of the POGT system.

POGT Technology Benefits

The primary technical benefit of a POGT is its improved thermal efficiency which is higher than all but the most complex of gas turbine cycles. Those systems that can come close to or match the efficiencies of POGT generally have capital costs that are much higher than those expected for POGT. Low gaseous pollutant emissions are also a key benefit of POGT and are for the most part as low as or lower than the best of the gas turbine systems. POGT benefits are summarized:

- Significant increase in power generation energy efficiency (30%) for industrial end-users.
- Reduced utility costs by production of on-site electricity at low incremental cost
- Reduced air emissions from POGT CHP system (<9 vppm NOx from boiler at 3% oxygen and acceptable CO)
- Reduced capital and operational costs for syngas production by substituting a non-catalytic POR for a catalytic reformer

POGT Conversion—Turbine Design Considerations

From an overall design perspective, key considerations that favor a turbine conversion to POGT operation are:

- Need to replace air cooling with steam cooling
- New relationship between air compressor and expansion turbine capacities
- Need to replace air with steam in seal systems
- Need to create/add a sealed exhaust duct
- Replacement of the combustor with a POR

Specifically those gas turbines with an externally accessible combustor such as the Spartan are more readily converted than those employing annular combustors. Recuperated gas turbines in general are prime candidates for conversion because of readily accessible air and hot gas lines connecting the engine proper to the recuperator. These lines often can be modified to allow a integration of a POR. The modern Solar Mercury 50 is a recuperative engine and could be considered as potential candidate for retrofit to a POGT.

Conversions of a standard gas turbine to a POGT most satisfy these basic requirements:

- Avoid ingress of air at pressure into the hot POR exhaust products
- Prevention of syngas/hydrogen leakage from the exhaust section

Under POGT operation, the turbine section extracts more power compared to standard gas turbine combustor products because POGT hot gases contain hydrogen, methane, and steam, which result in a working fluid having a higher specific heat. To counter this effect, the air flow through the system has to be reduced.

In addition, POGT operation fuel flows are higher than a standard gas turbine. This combined with a need to inject steam for cooling and temperature control requires a further decrease in the air flow to maintain output power within the limits of the standard gas turbine generator. Other conversion considerations include subsystems for fuel and engine control. These subsystems with a conventional gas turbine will likely need a complete replacement to manage POGT light-off through acceleration and speed control. Because POGT produces two products, electrical power and a secondary fuel, the control system needed is completely different from that employed by a standard gas turbine.

Given that POGT operation produces a secondary fuel gas, this makes gas turbines with air film cooling of turbine nozzles or blades or any other hot section component become less desirable. Air typically cannot be used for cooling in POGT mode due to concerns of contacting this cooling air with the flammable hot POR exhaust gases. Gas turbines that have un-cooled rotating machinery typically require low turbine inlet temperature. Where gas turbines use air film cooling of some hot end components such as ducts (and most do), a change to steam cooling is considered necessary. Steam is an ideal coolant for metal surfaces in contact with these gases.

POGT operation uses steam for both cooling and dilution purposes. Dilution steam is used to reduce the temperature of the gases leaving the POR to the required turbine inlet temperature, which is on the order of 1500°F for Spartan engine. Engine trials found that additional cooling was necessary. A supplemental injection of atomized water was combined with the dilution steam flow to achieve satisfactory temperature control. Steam cooling was also applied to the POR chamber housing.

For prototype development purposes, the Spartan was equipped with an air bleed port to dump excess air to vent. In a POGT designed turbine, a smaller compressor and a higher output turbine (than a standard gas turbine) are designed into the system. In modifying an existing gas turbine, the options are to either bleed air from the compressor discharge section and divert to other uses or modify the compressor. In general, the least expensive (but also least efficient) and easiest method for reducing air flow rates is to simply bleed air from the system. In many cases, this air can be used in a later stage where combustion of the exhaust product gases takes place. There are several options for the compressor modifications including retrofit of the existing, replacement with different one, installation a separate drive train. For the selected engine to be converted to POGT, the most appropriate version for compressor modification should be applied.

Many gas turbines use cold compressor discharge air to buffer seals that prevent the ingress of hot high-pressure gases to critical areas such as shafts and bearings. Such air buffering cannot be employed in a POGT. Steam or possibly nitrogen has to be used instead. The ease of modifying the gas turbine to incorporate buffering steam (or other gas) for critical high-pressure seal areas is a important factor in evaluating a particular engine for conversion to a POGT.

General POGT Conversion Requirements

Essential requirements for conversion of a conventional turbine system to POGT operation are:

- Addition of external steam boiler
- Installation of new/modified compressor
- Installation of steam seal buffering system
- Replacement of combustor with POR system
- Install steam cooling flow lines
- Addition of needed instrumentation
- Modification of engine control system with a POGT control system

The first requirement for the conversion of a gas turbine to a POGT is the installation of a steam generator operating in parallel with the gas turbine system. A POGT commercial operation involves steam production generated from combustion of part (or all) of the syngas produced by POGT operation co-fired with natural gas at the boiler.

The second requirement is either the removal of the compressor, the replacement of it with a lower flow system, or the addition of air bleed ports. In the case of this development effort, air vent ports were added to the POR as well as the capability to dump air from the Spartan with a bleed port at the compressor discharge. The air bleeding from the compressor exit in practice is used as the combustion air in the boiler or furnace where the fuel gases are burned.

The replacement of the existing gas turbine combustor with a POR presupposes that the gas turbine to be modified has some form of an external combustor. Both the combustor and its associated casing have to be replaced with new component parts. In general, the POR is larger than the combustor it replaces. As a consequence, the new POR protrudes much further from the engine casing than the original system. Although the exit diameter of the POR is likely to be constrained to the original combustor so it fits with the internal duct work, it is difficult to replace. The POR has a "primary" or reaction section that is larger in diameter than the combustor it is replacing. This, when combined with the needed extra length, may require the construction of extra supports for the POR casing to support the POR proper. Additional support structure is needed by the joint system where the POR casing mates to the engine housing. In essence the POR and its casing have a "lollypop" look. Thus with a large diameter (large mass) section mounted on the end of a smaller diameter structure large bending stresses can be created. It is convenient to bleed the air flow from the "upper" end of the POR casing thus ensuring an adequate cooling flow for the outside of the POR structure. Steam injection for both cooling of the POR liner and for dilution purposes enters the POR through lines penetrating the pressure casing. The actual approach or methodology by which the steam is injected into the POR depends on the gas turbine type and on its construction.

POGT instrumentation will have dedicated thermometry to monitor turbine inlet or POR exhaust temperatures. These exit temperatures are not high because un-cooled gas turbines are units expected to be used for the first POGT systems. Typically these temperatures will lie between 1500 and 1650°F for Spartan type engines. Using modern platinum based thermocouples these temperatures can be easily measured. For testing purposes, composition monitoring of the POR exhaust was performed utilizing gas chromatograph analysis and real-time gas analyzers measuring hydrogen, carbon monoxide, oxygen, and carbon dioxide.

Furthermore, engine monitoring and control equipment needs to be developed. If necessary, the control of two products; electricity and fuel gas composition will be needed, and this system is different from the simple control of one product such as electrical power. Both start-up and shut-down is different from the standard gas turbine. Start-up requires steam addition and bleeding air from the compressor discharge to be factored into the required lean light-off followed by the rapid move to fuel rich operation. Although the replacement control system is different from that of a standard gas turbine, it will not be difficult to accomplish using microprocessor-based controllers.

A recuperated gas turbine, for example as Solar Mercury 50, has a favorable layout of the rotating machinery and combustor. This kind of configuration is good candidate for conversion to a POGT. One of the issues relates to the hot section of the engine that employs air cooled turbine nozzles and blades because it does have a high firing temperature and turbine inlet temperature. The engine with "back-to-back" configuration of the compressor and turbine where the compressor inlet and the turbine exhaust sections are adjacent to each other allow for substitution of other rotating components. A POR can be easily mounted where the combustor is presently located. Access to the internal structure of the engine is straightforward and, lines providing steam to seals and for cooling hot ductwork can be installed.

Conversion of Solar Spartan T-350

The conversion of the Solar Spartan 200 kW generator gas turbine was studied and detailed designs for the conversion of the various engine sections were completed. The general layout of the Spartan POGT (shown with steam injection) is shown in Figure 9.

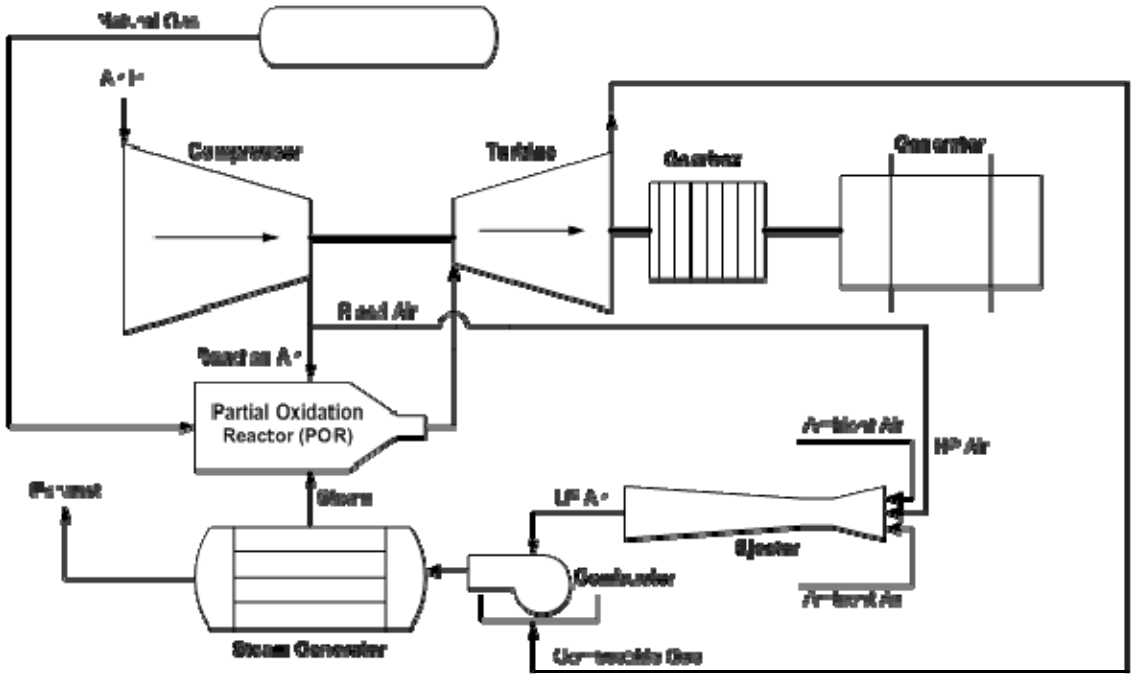

Figure 10. Spartan POGT Schematic

Source: Gas Technology Institute

Conversion of the Spartan to POGT mode of operation was divided into three areas:

- Engine modifications
- Subsystem requirements (control and management of fuel, air and steam inputs)
- Combustor replacement with POR

Engine modifications consisted of a variety of mechanical rework tasks such as addition of an air bleed port on the engine housing, design of a new seal plate, addition of a steam buffering manifold, and plugging internal engine passages used for air cooling. Subsystem requirements involved replacement of the engine control system and development of special light-off, acceleration and shutdown procedures. Replacement of the conventional combustor with a POR involves the development of a mechanical interconnect assembly to satisfactorily mate the POR to the turbine inlet scroll. Designers are able to work around the mechanical constraints of the engine and succeeded converting a Spartan turn to operate in POGT mode.

Engine Modifications

POGT engine modifications made to the Spartan turbine 200 kW generator set are listed below:

- Bleed port addition
- Steam seal buffering
- Transition duct cooling (steam)
- Instrumentation requirements

There exists versions of the Spartan engine that have a specifically designed bleed port mounted on the combustor scroll casing diametrically opposite the combustor location. This successful design approach was adopted to serve as the primary method of bleeding air for POGT operation. A 4 inch bleed port size was selected and installed on the Spartan engine casing. Care was needed in cutting the sheet metal casing of the turbine and installing reinforcement at the nozzle. Another bleed air provision was incorporated in the POR design; this involved a bleed port from the dome of the POR casing. Bleeding air from the POR casing dome plate allowed air to flow over the POR reaction section for cooling purposes. The POR casing is design with a relatively large diameter to accommodate the large POR reaction section. Thus the installation of a ring seven bleed-ports equally spaced around the dome plate and connected to a 1.5-inche manifold was a simple task.

Spartan POGT steam requirements for sealing and process purposes were provided by an on-site facility boiler. Because the Spartan employs a back-to-back compressor/expander arrangement, a seal plate installed between the compressor and expander prevents hot gases from contacting the shaft. To ensure that no hot gases reach the shaft, a small quantity of buffering air leaks past the seal and flows radially outward along the back-face of the radial turbine. This air flow enters the hot gas stream at the rim or inlet of the turbine. Under POGT operation, this air stream has to be replaced with steam or other inert gas. A manifold design was incorporated during the Spartan conversion process to distribute steam or inert gas

arranged to enter the air flow path at a higher pressure than the air thus blocking the air flow (see Figure 10). This steam then flows over the turbine and enters the hot gases at the same place that the air enters. Some small amount of air may penetrate and be carried with the steam to the turbine rim however this air is sufficiently diluted with steam that it is not cause any local hot streaks. The oxygen present reacts with the hot gases but slowly because of the steam present. Steam enters the Spartan air buffering flow path through lines that penetrate from the outside casing and through the diffuser vanes to a space above the shaft seal plate rim. A series of orifices drilled through the wall separating this space from the seal plate allows the steam access to the seal plate rim. Holes or castellations in the rim allow the steam to enter the air flow path downstream of the shaft seal. The backpressure on the seal provided by the steam effectively prevents the air from leaking to the hot gas side of the seal and thus eliminates the problem of the creation of local hot spots on the turbine blades.

In addition to this steam for seal buffering, the unmodified Spartan employs air cooling for the back of the turbine nozzle inlet section. The air for this cooling has a long flow path in a double wall that has the exhaust duct as the outer wall. The air is metered through a row of holes in a "Zee" shaped metal section. To convert the Spartan to a POGT, this air flow path has to be blocked. A section of the exhaust duct is cut close to the metering point allowing access to the air holes. These are welded shut and the exhaust ducted welded back together with a strengthening ring to ensure concentricity is maintained. Steam entering the same area as that used for seal buffering can be routed for cooling of the nozzle section. There are bolts that hold the inner turbine nozzle section to the main structural piece. These bolts penetrate through the turbine nozzles and exit in the cooling passage. By drilling a hole through the center of these bolts a flow path for the steam is created. This steam replaces the air that was previously used.

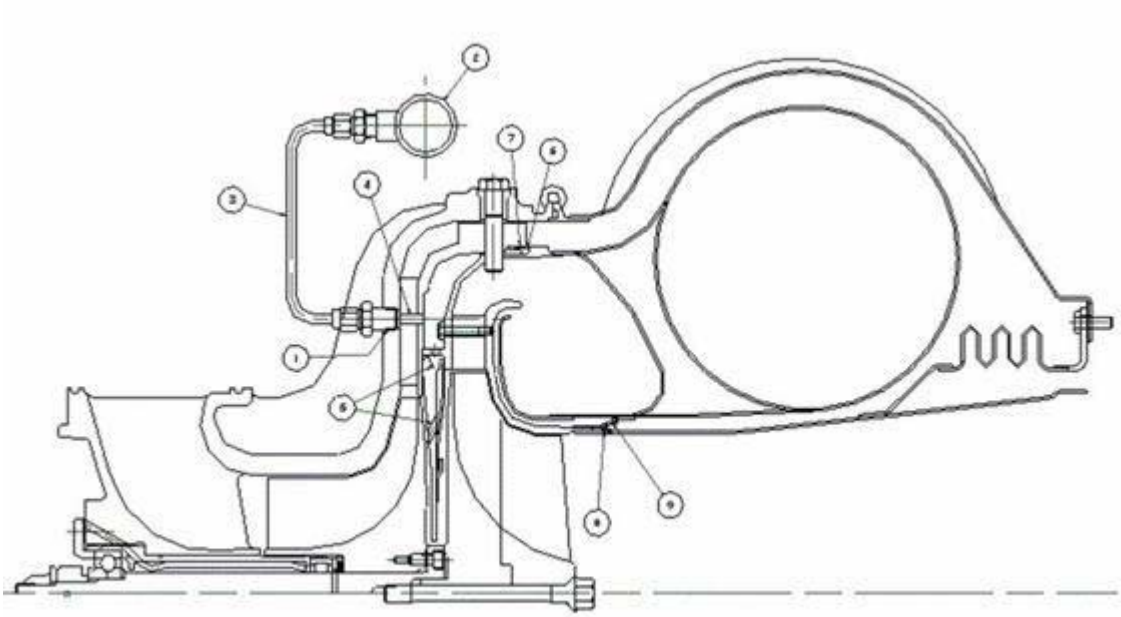

Figure 11. Spartan Steam Injection For Sealing and Cooling

Extra instrumentation is planned and integrated into the engine during the conversion modifications. Of particular interest are the temperature and pressure of the gases that leave the POR and enter the turbine need to be monitored. To accomplish this, the engine locating pins that tie all of the three concentric engine structures together are "drilled out." This allows thermocouples to pass from the outside of the engine through to the hot gas duct that conveys the POR exhaust to the turbine inlet. Thermocouples successfully employed for this service were type K, (chromel/alumel construction). Steam dilution flow rates are modulated in response to these measurements to ensure the correct turbine inlet temperatures. In addition, pressure instrumentation was installed to monitor static pressure at this location as well.

Subsystem Requirements

POGT conversion subsystem provisions included:

- Additional temperature measurements
- Gas composition measurement
- Fuel/steam/bleed air control system
- Light-off and shut-down control system

Additional instrumentation was installed on the POGT converted engine for monitoring, control, and safety reasons. The POGT test cell was equipped with thermocouples to monitor the fuel gas temperature leaving the engine. At the same proximity where temperature was measured, a small continuous sample gas flow was extracted and passed through real-time analyzers for monitoring hydrogen, carbon monoxide, and oxygen. It was analyzed by a portable gas chromatograph for determination of main constituents in the POGT syngas. Determination of the concentrations is correlated with the exhaust temperature and the air, fuel, and steam flows.

POGT control requirements are more complicated given that the control system must regulate production of power as well as production of a fuel gas. Initial control concepts succeeded in safely managing POGT operation from light-off through continuous speed. POGT process flows of air; fuel and steam were metered and regulated via dedicated control valves. Changing operating conditions were accomplished from a central control panel equipped with single-loop process controllers. Logic to safely start and monitor continuous operation was provided by a programmable logic controller (PLC). Majority of flow measurement stations utilize orifice plate elements. System fuel, air and steam flows will be varied as needed to provide the desired hydrogen to carbon monoxide ratios in the POGT syngas.

As development of POGT progresses, improved and simplified control configurations are expected. Model-based algorithms loaded on a microprocessor based control platform can provide the required flow response and are expected to produce desired electrical to gas energy ratio and at required gas composition. POGT response to load changes is an area that requires further study. Logic diagrams for an engine control system were created; dedicated subsets reside in the logic that coordinate light-off and shut-down events. Light-off is undertaken at lean conditions in the POR and transition to POGT mode (fuel rich) of operation is quickly made after light-off is confirmed during the engine acceleration stage.

Combustor Replacement with POR

The heart of any turbine POGT conversion is the POR and its proper application. Essential requirements for this undertaking consist of:

- POR design constraints
- POR design concept
- Steam addition to POR
- Casing design

The primary POR design constraints are related to the geometry of the mating point to the engine proper and to safety issues. The geometry of the engine mating point fixes the POR dilution section diameter and the air gap between the POR casing and the liner at the same point. Safety considerations to date have created the need to have a steam shroud around the POR proper thus ensuring that air passing around the POR has no chance of entering the reaction section. Later designs may consist of just a refractory lined chamber. The POR concept uses several premixed air and fuel jets that enter the POR reaction. The premixing ports that produce the mixed fuel-air jets are located on the rear wall of the reaction chamber and are disposed around it on a appropriate radius. The position of these ports can be seen in Figure 11 where they are identified as a series of red cover-plates bolted to the POR casing.

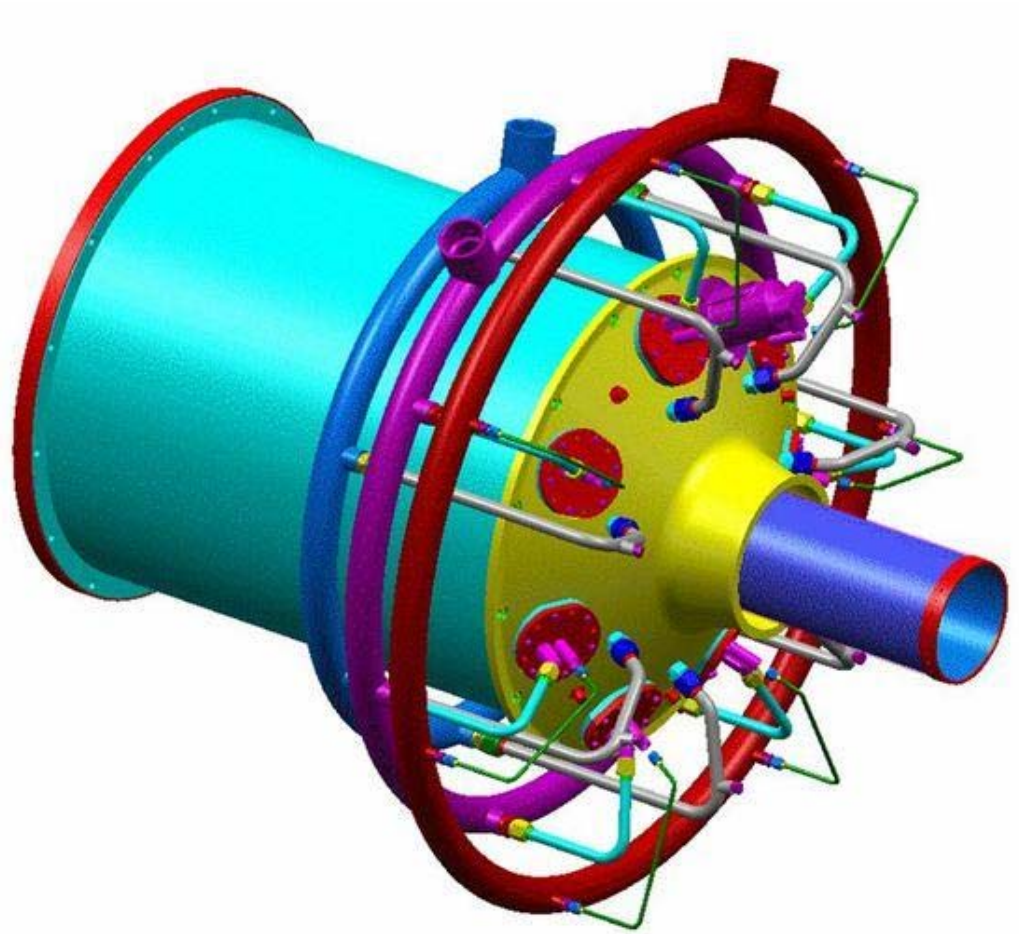

Figure 12. Solid Model Drawing of POR and Casing

Source: Gas Technology Institute

One of the ports (colored purple) is shown removed. Each of the cover-plates has two fuel connections and the larger diameter tube is the main fuel line. This fuel is premixed with the reaction air. The smaller diameter tube carries the start fuel and this fuel flow is roughly 5.0% of the main fuel flow rate. These fuel lines are connected to the appropriate fuel manifold. The start fuel manifold is shown as red while the main fuel manifold is purple. A third manifold colored blue provides the steam for dilution, reaction, and cooling.

Steam can be added to the air-fuel jets or introduced directly into the reaction chamber. Steam is also used, when necessary, as a diluent to reduce the temperature of the gases in the reaction chamber (typically between 2,000 and 2,200°F) to the required turbine inlet temperature (TIT). This TIT for the Spartan is on the order of 1,550°F and thus dilution steam has to be employed. Many of the more advanced gas turbines use a TIT around 2,000°F, and this allows reduced levels of steam to be used. The pressure casing that surrounds the POR has to be designed to mate to the existing engine piece, which necessitates a reduction in diameter because the combustor that is being replaced by the POR was much smaller in diameter. The existing Spartan mounting methodology is a ring clamp arrangement, but this may be modified to allow a more substantial flange system to be used. The bleed air ports are at present located at the

dome of the POR but this may be changed and the air bled from a more conventional port located on the engine casing diametrically opposite the POR.

2.2. POGT Unit Development and Test

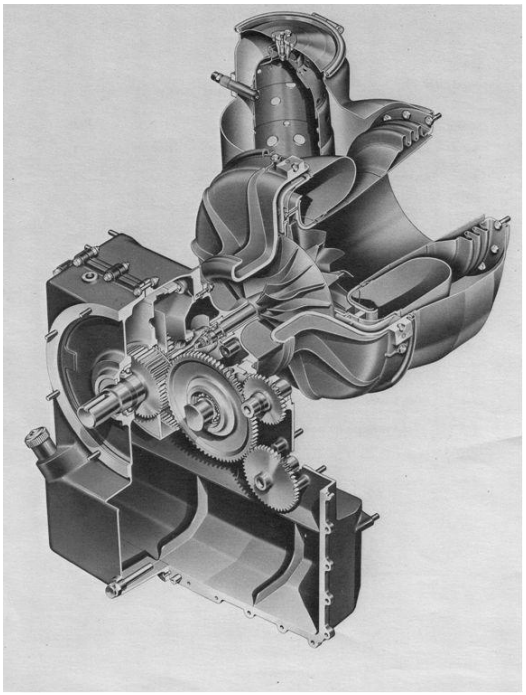

Figure 13. Spartan T-350
Source: Gas Technology Institute

A specifically designed POGT system would involve specifying an air compressor, an expansion turbine and internal heat exchangers, all based on the technology used to engineer and build current gas turbines and a POR which would be based on gas turbine combustor technology but be of a more complex configuration. It is expected that a POGT would not be any more difficult to design and manufacture than a standard gas turbine. Depending on the extent to which existing turbo machinery components and gas turbine recuperators or recuperator unit cells or industrial heat exchangers can be used, the development would be one of modest cost and duration. Because of time and funding constraints the conversion of an existing industrial gas turbine to a POGT configuration has been selected as the most efficient approach to conduct proof of concept and performance tests of POGT technology. In light of this decision, Solar offered a Spartan T-350 based standby generator set suitable for conversion to a POGT configuration in support of the technology development. This particular engine is shown as a cut-away in Figure 12.

A major component in this planned conversion to POGT is the partial oxidation reactor (POR). The POR is a unique piece of equipment with significant differences in operating conditions compared to conventional turbine can combustors especially regarding air flow requirements and steam injection. A functional POR design and assembly is essential.

Technology development activities were divided into a number of major work areas such as; 1) POGT engineering studies; 2) POGT Test Cell design and construction; 3) Partial Oxidation Reactor Prototype design, fabrication, construction and assembly; 4) Spartan T-350 turbine engine POGT conversion design, fabrication and assembly; 5) POR Proof of Concept Testing; 5) POGT Performance Testing and 6) Long-Term POGT Demonstration. This section summarizes the work conducted in the design, fabrication, and assembly.

Review of Conception Partial Oxidation Reactor Designs

An analysis of conventional combustors made it apparent that no true conversion of an existing gas turbine combustor to a POR was feasible; specifically for the Spartan T-350 a total combustor replacement would be needed. The replacement system would include a POR chamber complete with a new pressure casing and new instrumentation for both control and performance evaluation.

Three different POR conceptual arrangements were evaluated. The concept finally selected for the POR detailed design and fabrication incorporated steam cooling provisions for the reaction chamber with angled injectors. The intent of the conceptual review was to determine the best type of design a POR assembly should have to conduct experimental tests both in a rig setting and for performance demonstration purposes in a Spartan T-350 engine converted to operate in POGT mode. One note to remember, the converted POGT Spartan engine incorporates an air bleed port, which would be omitted in a specifically designed POGT turbine engine. As a consequence overall efficiency projected from Spartan T-350 demonstration tests is not expected to match estimates compared to operation with a dedicated POGT designed system.

The first of two related Spartan POR conceptual designs, designated as POR1, is shown in Figure 13. POR1 approach for fuel and air injection uses parallel straight air-fuel jets with an internal shroud element to induce through entrainment local recirculation and vortices. POR1 also employs steam cooling; this provision utilizes a separate steam housing encapsulating the entire reaction chamber. Steam flow is directed into the annular volume between the steam housing and reaction chamber to control metal temperatures and for dilution cooling of the POR exhaust gases. A separate pressure case enclosures the reaction chamber/steam housing to support operation at required turbine delivery pressures. The second conceptual design, POR2, is given in Figure 14 and is comparable with POR1 but without steam cooling. POR2 method of fuel and air injection is the same and instead of steam housing, insulating material fills the interior volume between the reaction chamber and pressure case.

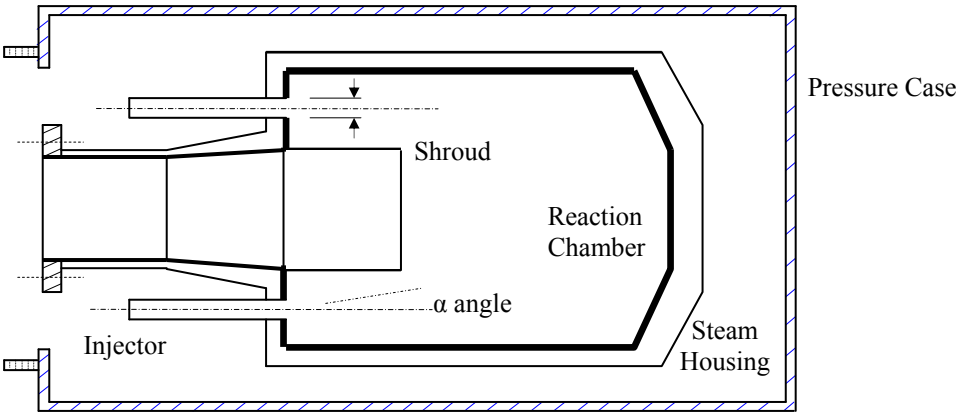

Figure 14. POR1 Schematic; Steam-Cooled, Internal Shroud, Parallel Injector Reaction Chamber Concept.

A third concept studied, POR3, came about after consideration and review of the two preceding concepts and is shown in Figure 15. In this case, injector ports were equally spaced and installed at an angle instead of a parallel configuration; studies indicated angled ports improved the premix of air and natural gas fuel and created internal jets that merge on the reactor centerline and formed a local vortex.

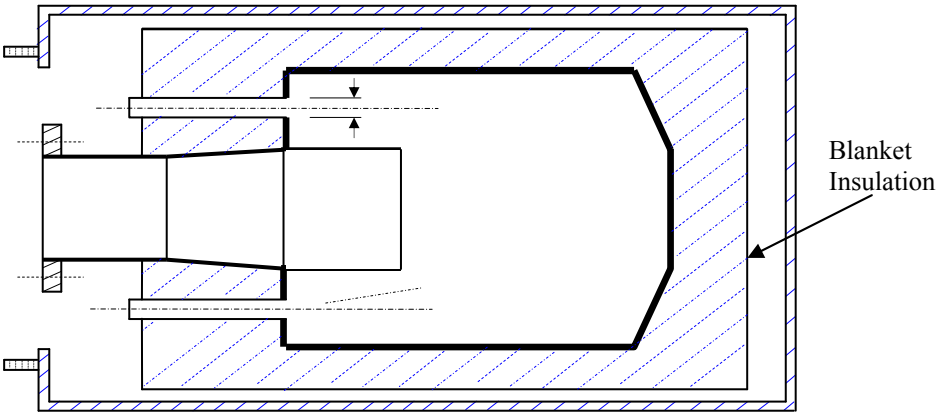

Figure 15. POR2 Schematic; Insulated (Un-cooled), Internal Shroud, Parallel Injector Reaction Chamber Concept

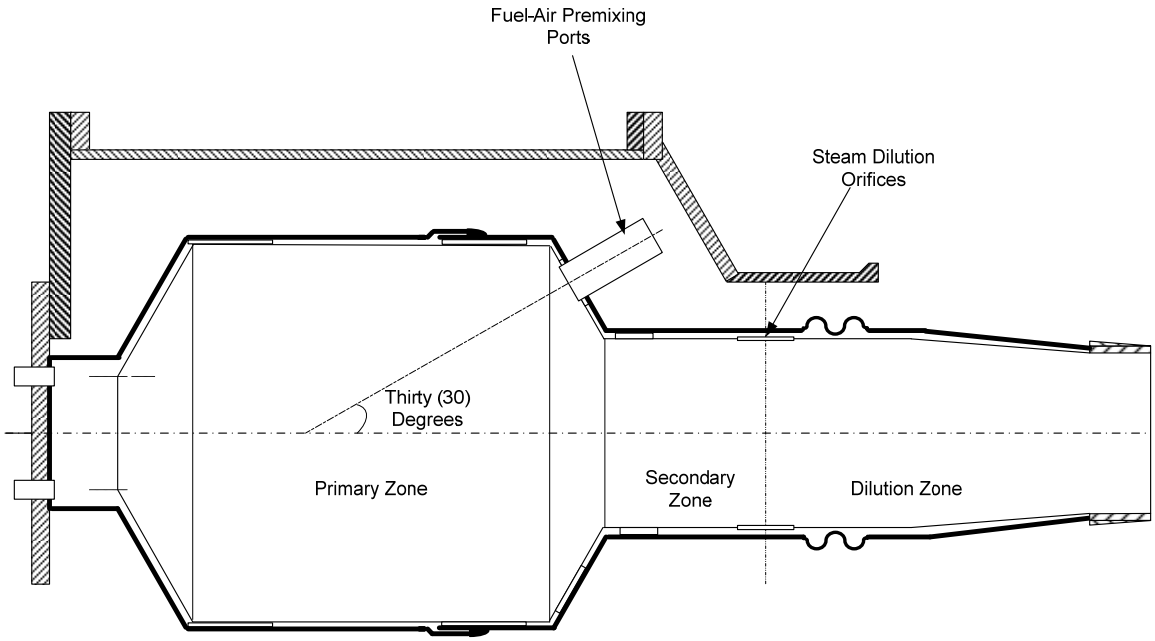

Figure 16. POR3 Schematic, Steam Cooled, Angled Injector, without Internal Shroud Reaction Chamber Concept

Source: Gas Technology Institute

The POR3 concept has no internal "hot parts" that could possibly detach and impact the turbine nozzles or blades. Due to the process considerations to provide a strong recirculation pattern of hot gases to stabilize the reaction, the diameter of the primary reaction zone has to be relatively large. Large diameters reduce the jet cross flow velocities and allow the jets of air and fuel to penetrate to the center of the reaction zone and create the necessary recirculation flow pattern. And because methane conversion reaction rates are generally slow (low OH radical concentrations due to low oxygen levels) the size of the POR has to be large. Of the three conceptual designs evaluated, POR3 was selected for final design and fabrication. This version consists of a large diameter main reaction chamber and a smaller diameter dilution and mixing section. Additional reaction will take place in the dilution section between the steam used to reduce the reaction temperatures and the carbon monoxide present in the gases leaving the main reaction section. This shift reaction will provide improved hydrogen exhaust concentrations.

All conceptual designs under consideration were developed and analyzed using standard engineering practices along with support of computational fluid dynamics modeling using Fluent simulation software. Simulation results characterized the effect of different design elements such as reaction chamber dimensions, number of injectors, injector diameter and injector installed angle. Examples of computational designs created during this effort are shown in Figure 16; where 16a gives a section view of the reaction chamber for the POR3 concept and 16b shows the same mesh development for POR1 configured with an internal shroud. These computational fluid dynamics studies supported the rapid investigation, selection, and refinement of the final POR design. Figure 17 show results from computational fluid dynamics simulations comparing temperature predictions in POR3 and POR1 reaction chambers. POR 3

design (17a) provides more uniform temperatures and better mixing of the fuel/air stream out of the injector.

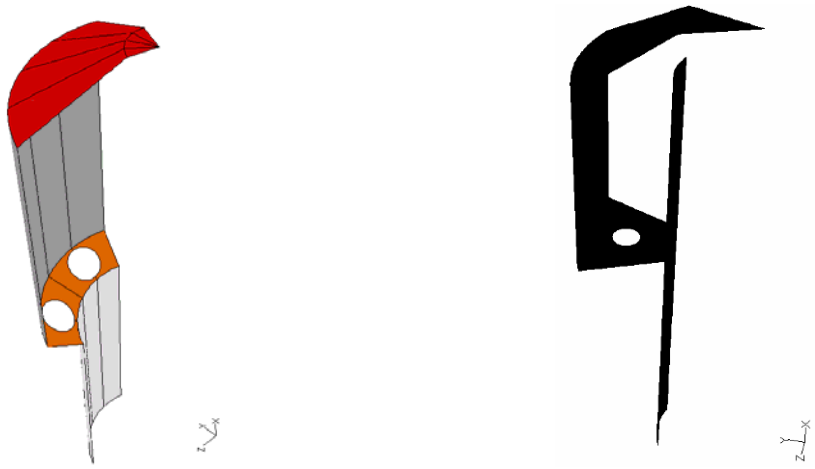

16a. **16b.**

Figure 17. POR CFD computational meshes; a) represents POR3 case; b) represents POR1 case with internal shroud

Source: Gas Technology Institute

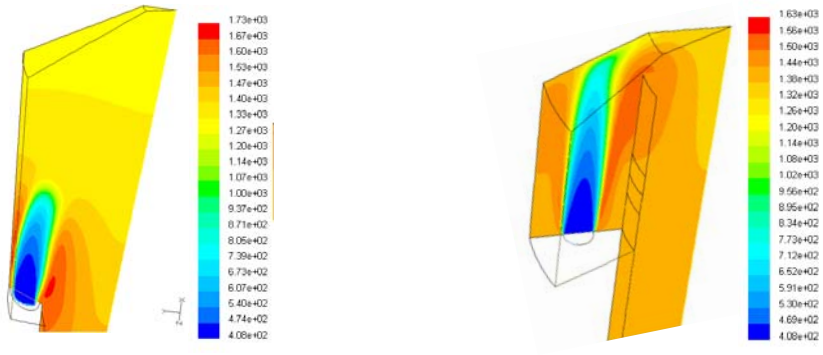

17a. **17b.**

Figure 18. POR CFD temperature profile predictions; a) represents POR3 case; b) represents POR1 case with internal shroud.

Source: Gas Technology Institute

POR Preliminary Design

The size of the POR depends first and foremost on whether equilibrium or non-equilibrium operation is required. Due to the limited data available on performance and size relationships for non-equilibrium POR systems, it is extremely difficult to produce a preliminary design. For equilibrium systems the process is easier because combined theoretical and empirical correlations exist that tie global reaction rates to a volume needed to reach near equilibrium conditions. For this program, emphasis is being placed on reaction rate controlled near equilibrium systems that can produce syngas or hydrogen rich exhaust gases. The performance required, that is the overall efficiency of the POGT and the split between the electrical power produced and the chemical energy contained in the fuel gases that are both produced, determines the design of the POR. The need to minimize gaseous pollutant emissions also affects the design process.

The design of the selected POR concept is such that the air and fuel will be premixed in external ports or nozzles and the reactor walls will be blanketed with steam to avoid any air leaking into the hot flammable fuel-rich product gases. The reactor design thus employs two annular passages surrounding the "can" reactor, the inner one being filled with steam and the outer one with air. The steam is pressurized to the point that new air leaks into the steam passage.

The design of the premixing ports or nozzles is based on both theoretical and empirical models using data generated by both GTI and others. The designs are relatively simple in concept. The air nozzles or ports are simple tubes around 1-inch in diameter that have both a single point fuel injection tube and a tube with multiple radial holes fixed at the center of the air-tube terminating just inside the air-tube inlet. The single point fuel injection system is typically made from standard 0.125-inch tubing and is used for start purposes. A large curved section of the

main tube in which the air and fuel is mixed allows the air to enter radially and accelerate into the main air-fuel mixing section. The acceleration of the flow from the larger to the smaller diameter enhances the air mixing process and eliminates or minimizes any abnormal velocity profiles or disturbances.

Figure 19. Spartan T-350 Engine Showing Can

Source: Gas Technology Institute

Using a rich premixed fuel-air charge ensures that the reactions will be reaction rate controlled. Thus the assumed reaction rate allows an estimate of the size of the POR to be made for a given reaction efficiency. The size of the POR has to increase as the desired level of efficiency is increased. Here the reactor efficiency is defined in terms of as the amount of methane actually reacted compared to the theoretical equilibrium predicted levels. The levels of methane remaining in the exhaust gases over and above the equilibrium levels are a measure of the system inefficiency. The reactor performance is strongly tied to the reactor size particularly when an equilibrium product mix is required. To achieve a high efficiency, (typically 99.9 percent) the POR will be large if the product mixture leaving the POR is to be near equilibrium. This large reaction volume need ties in with the POR aerodynamic requirements. Low cross velocities over the incoming air-fuel jets are required to allow them to penetrate to the centerline of the reaction chamber. This penetration is critical in creating the large recirculating flow that stabilizes the reactions.

In the case of Spartan T-350, the POR replaces a conventional can-type combustor (see Figure 18). Thus the POR needed must fit a can type geometry. However the POR has to be considerably larger in diameter than the combustor it replaces. These large systems often make the production of the needed internal aerodynamic flows a more complicated task than for the more common smaller can systems usually associated with small gas turbines. The existing exhaust dimension where the original combustor mates to the turbine volute or transition duct is approximately 7 inches in diameter. The transition from the POR diameter to the 7-inch diameter exit creates velocity gradients that tend to hinder the desired flow recirculation(s) necessary to stabilize the reacting flow. Larger diameters can provide better recirculating flows

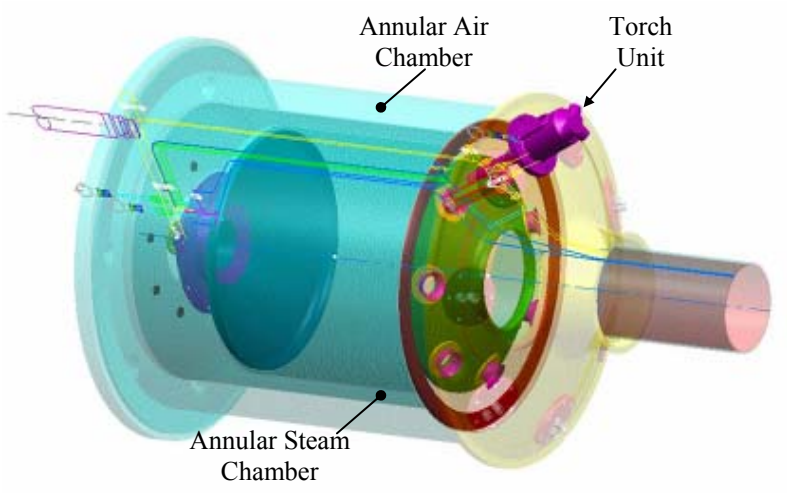

but at some point the pressure drop of the POR could be increased to provide the required jet penetration.

Figure 20. Solid Model of POR Final Design Assembly

Source: Gas Technology Institute

POR Final Design

The POR is a novel piece of equipment for which there was little precedent to follow in guiding

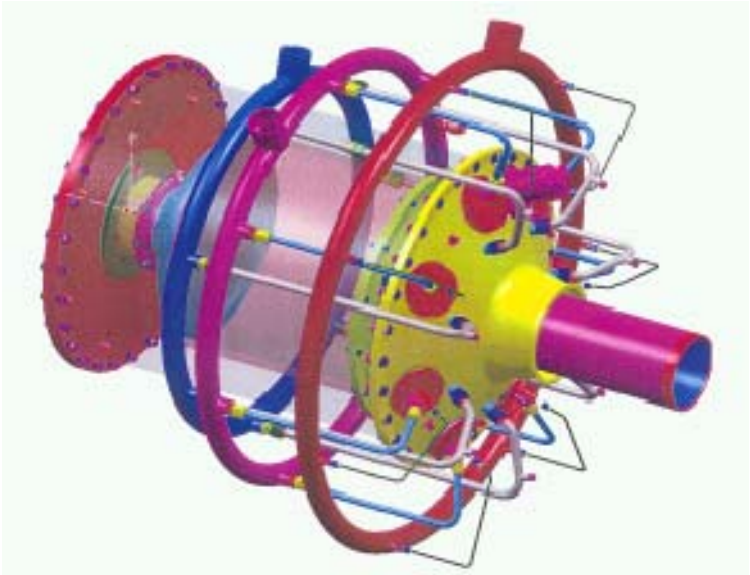

its design activity. Overall attention given to the POR design considered features such as functionality, structural safety, ruggedness, flexibility, and cost to construct. Careful analysis of operating requirements led to an initial POR mechanical design, which was based on engineered estimates, good practices and hand calculations.

Figure 21. View of POR Annular Steam and Air Chambers

Source: Gas Technology Institute

As the design progressed, the project team felt justified in the preparation and investment of conducting a finite element analysis and study of various design options and design sensitivities. With results from the finite element analysis, a final POR mechanical design was established; a solid model view of the entire POR assembly is shown in **b**

Briefly, the POR mechanical design consists of a pressure case, a steam housing, a heat shield and the essential reaction chamber. Other major components include: multiple fuel-air mixing ports commonly referred to as Injectors, one torch unit (for start-up only), and a system of process stream manifolds with interconnection tubes. Process streams include compressed air, steam (dilution cooling and process services) and natural gas (start gas and main fuel services).

For clarity, another solid model view of the POR design is given in Figure 20 without the manifolds and with the color faded on the pressure case components. Here the shape of the reaction chamber is clearly distinguished as well as the annular steam housing surrounding the reaction chamber and the annular chamber containing compressed air for the injectors. On the rear dome, an auxiliary port is provided to vent a portion of compressed air for fine tuning of the air flow entering the POR.

This cross-section also clearly shows the position of the Injectors (premixing ports) and how the air-fuel jet produced enters the POR proper. The POR as designed is considerably larger than the combustor that it replaces the liner being approximately three times the diameter of the original combustor. This larger diameter with its corresponding long residence times is needed because the reaction rates under the fuel-rich conditions of the POR are much lower than those found under fuel lean conditions.

The stability of the POR is also very important and the operation depends strongly on the internal aerodynamics of the reaction chamber. The angled premixing ports produce a series of

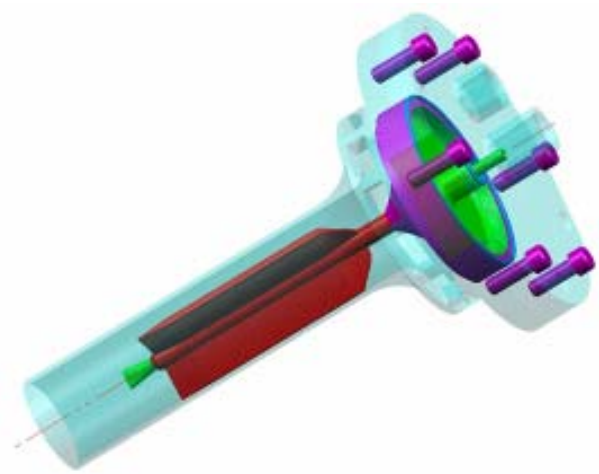

Figure 22. POR Injector Conceptual

Source: Gas Technology Institute

jets that penetrate to the POR centerline where they merge. The bulk of the merged jet flow moves toward the POR dome on the centerline. When the resulting merged jet flow reaches the dome the flow is forced to turn 180 degrees. This 180 degree change adds very little $\triangle P$, and minimal impact on compressor power is estimated.

Pressure drop across the POR is expected to range from 2 to 4% of supply pressure, similar with conventional engines. No decrease in mean fluid velocity entering the turbine is expected because of the POR

outlet tube design. The resulting flow field is a confined vortex that recirculates hot reacted gases over and between the incoming air-fuel jets. Sufficient mixing between the incoming jets and the recirculation of hot gases from within the POR ensures ignition of the jets and maintain a stable flame. The pressure drop in the POR is expected to be between 2% and 4%, which is the same as that of lean premixed low NOx combustors on current design convention al gas turbines.To ensure that the product gas composition can be accurately controlled the air and fuel entering the POR has to be well premixed. To accomplish this mixing an air-fuel premixing port was designed based on proven concepts. A cut-away solid model drawing of the port, as presently envisioned, is shown in Figure 21.

The structures shown as pale blue in are the main assemblies of the port and its mounting system. The section in blue where the bolts are located is a cover-plate that fastens to the outer casing and covers the access holes for the ports. The section with a radius smaller than the cover plates that has slots cut into it is the air inlet. Air flow direction in this diagram of the premixing port is from right to left. Air enters through the slots and flows radially inward to the cylindrical or tubular piece and then moves from right to left through the vaned passages. The air is accelerated as it moves radially inward, and in doing so it tends to mix and produce a "flatter" velocity profile than if the air had entered axially. This inlet air mixing also helps minimize any flow disturbances caused by structures external to the ports that might enter with the air flow. Located concentrically within the cylindrical section are the start fuel line and nozzle. This start fuel is injected into the air stream near the exit of the port to minimize mixing and thus aid light-off. The start fuel line is held in place with a three-vane "spider" type structure. The division of the cylindrical section into three smaller mixing ducts by the start fuel line support vanes improves mixing of the main fuel and air by reducing the effective hydraulic diameter of the ducts. The main fuel is injected through a number of small holes in the back face of the air inlet section. Referring to Figure 20, the green section is a plenum distributing the main fuel to each of the injection holes. The opposite side of the circular wall (shown green) is the face of the air inlet section. After injection, the natural gas jets and the air mix and by the time the gases leave the cylindrical section they are near perfectly mixed.

If desired, steam for reaction purposes can be injected with the air and fuel through the start fuel tube. This would occur after light-off and when the start fuel line connection valve has been closed. To accommodate the reaction steam the air and fuel flows would be reduced but the equivalence ratios could be maintained at near constant levels to produce a high ratio of hydrogen to carbon monoxide in the exhaust gases. Under rich combustion conditions

increasing SR will increase temperatures and decrease H2 and CO concentrations in the POR exhaust. Test operation data will be collected to quantify chemical composition of the syngas.

Maintaining the temperature of the POR liner below roughly 1800°F requires little cooling. However the cooling potential of the steam used as a "blanket" is sufficiently high that over-cooling can easily occur. The cooling concept employed involves a series of radiation shields with essentially non-flowing steam between them. The outer annular passage (with the casing as the outer wall) conveys the engine air around the POR and the heat shields to the bleed ports located in the casing dome. The steam filled passages prevent any undesired air leakage into the reaction chamber.

In the case of the Spartan, the turbine inlet temperature is lower than the POR reaction temperatures and thus as mentioned above steam addition is required to reduce the gas temperature. Majority of steam that fills the annular passages between the heat shields flows rearward and enters the POR dilution section through holes that are depicted as small rectangular structures attached to the POR liner. The injected steam jets mix with hot gases leaving the POR reaction chamber and move into the turbine inlet collector or scroll piece, cooling the POR exhaust by dilution.

The POR does not include a diffusion flame for either start-up or continuous operation. Start fuel is partially premixed, and the main fuel is fully mixed. Evaluation of soot formation is planned during tests with the POGT-converted Spartan turbine. Several provisions in the POR design to suppress soot formation consist of intense flue gas recirculation patterns and process steam injection directed along the internal walls of the reaction chamber.

Detailed Design

A detailed design for this first-of-a-kind experimental POR assembly was engineered with technical assistance from Belcan Corporation's Advanced Engineering and Technology Division.

Based on POR performance requirements, a comprehensive design analysis was conducted by Belcan that evaluated structural integrity, system thermal stresses, and process flow capabilities. Structural, thermal and stress analyses were conducted using ANSYS. ANSYS is a finite element modeling package for numerically solving a wide variety of mechanical problems such as static/dynamic structural analysis (both linear and non-linear), heat transfer, fluid problems, and more. Figure 22 below shows an ANSYS prediction of thermal gradients for the POR reaction chamber.

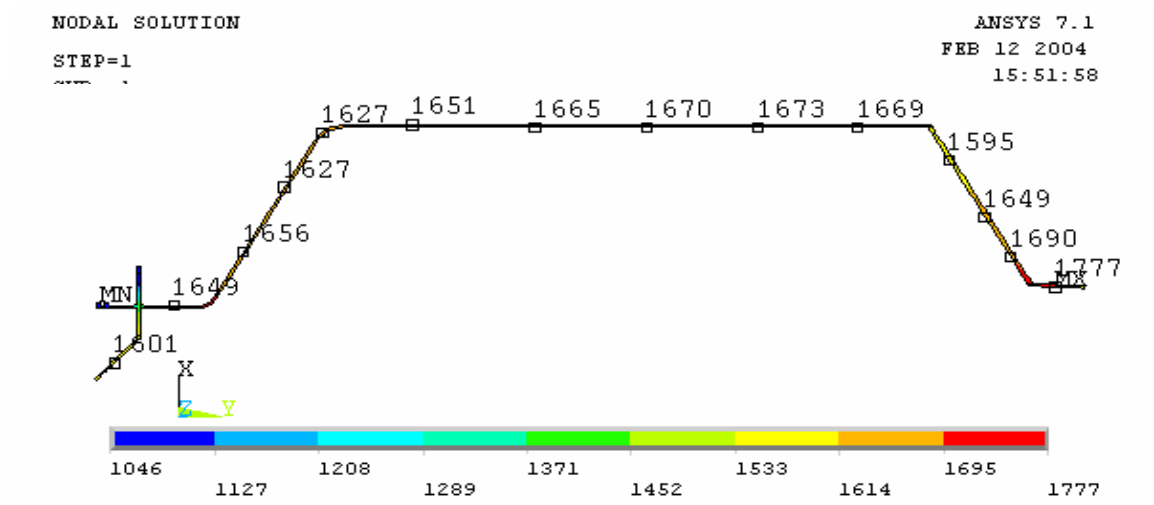

Figure 23. POR Reaction Chamber Metal Temperature Predictions By ANSYS

Source: Gas Technology Institute

The final design that evolved became slightly more complex as a result of the interface required for the injectors, torch and igniters with the reaction chamber, steam housing and pressure case. This interface was a series of grommet/retainer sets, which provide a means for the barrel sections of the injectors, torch and igniters to penetrate internal metal walls without restricting metal thermal growth and high mechanical stresses. The remainder of the design is relatively simple, consisting of plates and sheet metal. Final design analysis also incorporated an insulation jacket over the heat shield that surrounds the reaction chamber to maintain chamber wall temperatures above 1660 °F lower limit as specified for POR operation. This resulting design provides an excellent platform with functionality to conduct both experimental and performance technology evaluations proof of concept testing of POR technology in a test cell setting, and later performance testing, which replaces a conventional can combustor on a prototype 200 kW Spartan test engine converted for POGT operation.

2.2.1. POR Testing

After completion of detailed design work, a comprehensive, ready-to-build fabrication drawing package was created, and a solicitation for quotes to fabricate and assemble the POR were released. Bids from six qualified fabricators were received and evaluated. Fabrication work was awarded to MECO, Inc., a precision sheet metal fabricator and turbine engine component manufacturer located in Paris, Illinois. Material procurement, fabrication and final assembly of the POR design required 19 weeks to complete; the POR assembly was received at GTI at the

end of September 2004. Solar in support of fabrication activities constructed the POR Injectors and delivered the units to MECO for installation in the assembly.

A schematic of the POR test cell is provided in Figure 23. Photographs of the POR test cell and the POR test stand are included as Figures 24 and 25, respectively.

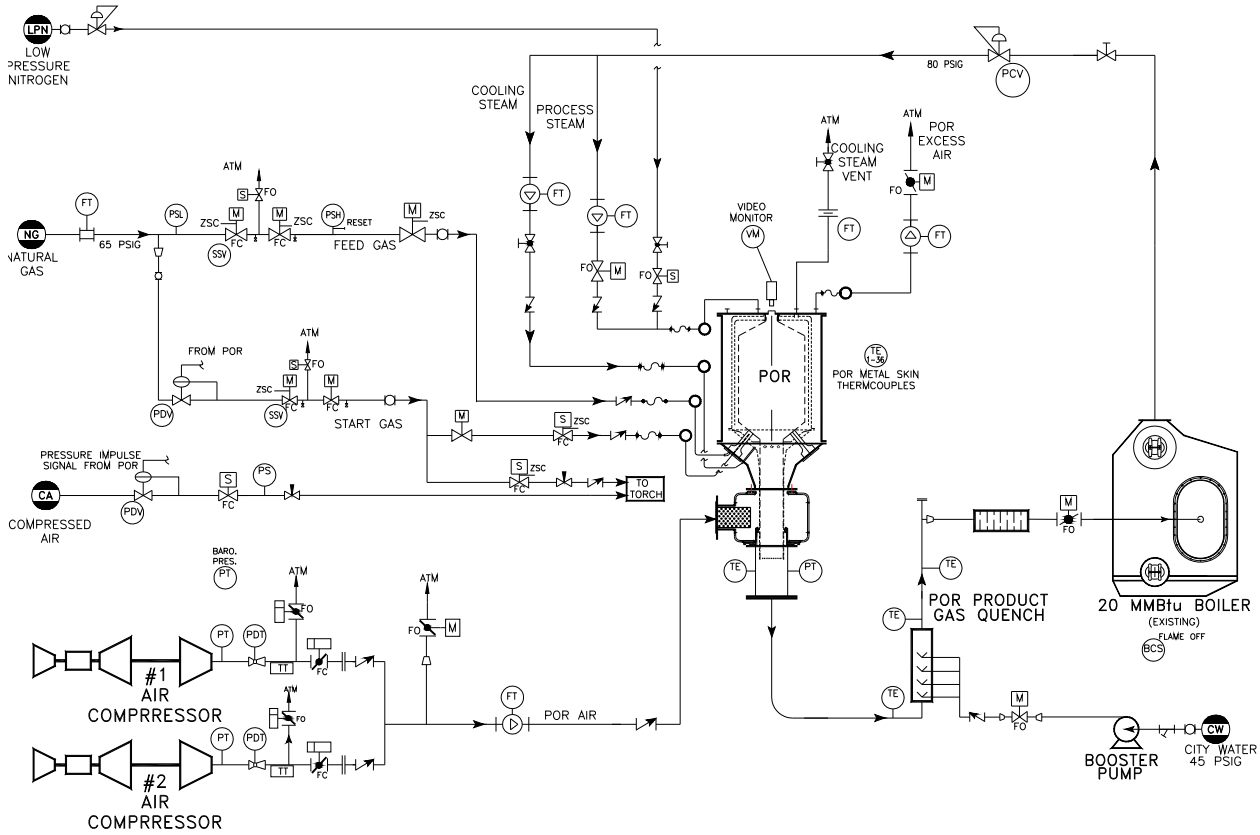

Figure 24. POR Test Cell Schematic Diagram

Source: Gas Technology Institute

Figure 25. View looking into POR Test Cell; visible is the main control panel, analytical hardware and DAS
Photo Credit: Gas Technology Institute

Figure 26. POR Unit in Test Stand

Photo Credit: Gas Technology Institute

Detailed information on the testing equipment and instrumentation that were used is available upon request.

2.2.2. POR Testing Overview

Conventional turbine combustors found in land-based power applications operate with air flows at levels significantly greater (>300%) than stoichiometric combustion requirements. The POR concept turbine combustor is unique in operating with less air flow than stoichiometric combustion requirements. The first POR unit was constructed through a deliberative design analysis, adapting accepted engineering protocols to arrive at a POR prototype. The same deliberative approach was applied to develop a POR test plan.

The test plan represents a best effort, based on current understanding of POR technology, to working toward a conversion of a conventional turbine to a POGT. Depending on experimental findings, modifications to the test plan may come about. A breakdown of test condition levels is provided together with a discussion of the rationale behind the tests. The actual test program was based on the results obtained. There are certain basic tests, such as the cold-flow pressure drop evaluation, that can be characterized fairly well, although there are unknowns regarding the effective discharge coefficients of the air-fuel mixing ports. The actual values were revealed in these initial tests. Other results, obtained in early methane conversion tests, were used for the reduction or increase in air flow for the remainder of the tests. Changes to the design point air mass flow was applied, and it is that largely drove modifications to the test program. The general test program is described below as a series of four tasks. These tasks were based on the ongoing accumulation of experimental test results.

Customary units have been used throughout this document. This means that English units have been used in the test program descriptions while metric units have been used to describe instrumentation performance and characteristics.

Task 1. Pressure Drop Characterization Tests

Before using the POR in a mode where fuel is being partially oxidized (hot tests), the POR was experimentally evaluated to determine its cold pressure loss characteristics. The pressure drop of the POR without combustion was close to the value during normal operation. The difference between the cold loss and the loss with combustion is the drop in pressure due to the momentum loss caused by heat addition sometimes called the "hot loss." This hot loss for the POR is less than 0.5% of the inlet total pressure. This cold pressure loss includes some characteristic rig losses, although these are small. The same rig was used during the partial oxidation test runs, and thus these characteristic rig losses remain the same.

To accomplish the cold pressure drop measurement, the air mass flow rate supplied to the POR rig was accurately measured via an installed 6-inch multivariable vortex mass flow meter. Von Karman demonstrated that when fluid flows past a bluff body, an alternating series of vortices is shed from each side, creating areas of fluctuating pressure. This frequency of vortices is directly proportional to fluid velocity. Given fluid velocity and a known size for the meter run a volumetric flow rate is obtained. Mass flow is obtained via compensation for flowing temperature and pressure, which are integrally embedded in the meter electronics. Sensing all process parameters at a single location improves measurement accuracy. A schematic of the test cell air supply and measurement arrangement is shown in Figure 26

Air flow rates up to 2.4 pounds-per-second were considered during POR testing; 2.4 pounds per second was noted because it simulates the Spartan operation. An air temperature of 398°F, together with an inlet pressure of around 60 pounds-per-square-inch absolute, are other typical Spartan air conditions. The test cell air compressor design was selected such that its performance is similar to the Spartan's. The installed vortex flow meter is suited to handle these flowing conditions and in addition provides 10-to-1 turndown in flow measurement and introduces minimal pressure losses upstream of the POR rig.

The test rig was instrumented so that the static pressure and temperature of the air in the plenum that feeds the POR can be determined accurately (see Figure 26). The temperature and pressure of the exhaust leaving the POR was measured as well as the pressure drop across the POR system. Two cold flow pressure drop tests were made prior to testing with partial oxidation in the reactor. These tests involve determining the pressure drop at two different air mass flow rates. The inlet pressures and temperatures at each of the two mass flow tests also were recorded. A plot of the square root of the non-dimensional pressure drop (ΔP/Pin) versus the inlet flow function ([W * Tin^0.5] / Pin) is actually a straight line passing through the origin,, Figure 23. (Where Pin is the inlet pressure, Tin is the inlet temperature and W is the mass flow passing through the system). Thus, these tests were readily provided the cold loss characteristic. The measured pressure loss characteristic was checked against previously calculated values to determine whether the assumed discharge coefficient for the air-fuel premixing ports was correct or not. Based on this data, an effective discharge coefficient for the ports was determined

and would be used in future designs. This characteristic was also be used to check the POR during hot tests. A significant change from the cold pressure drop characteristic will indicate that the POR has sustained some form of damage or that the instrumentation is malfunctioning.

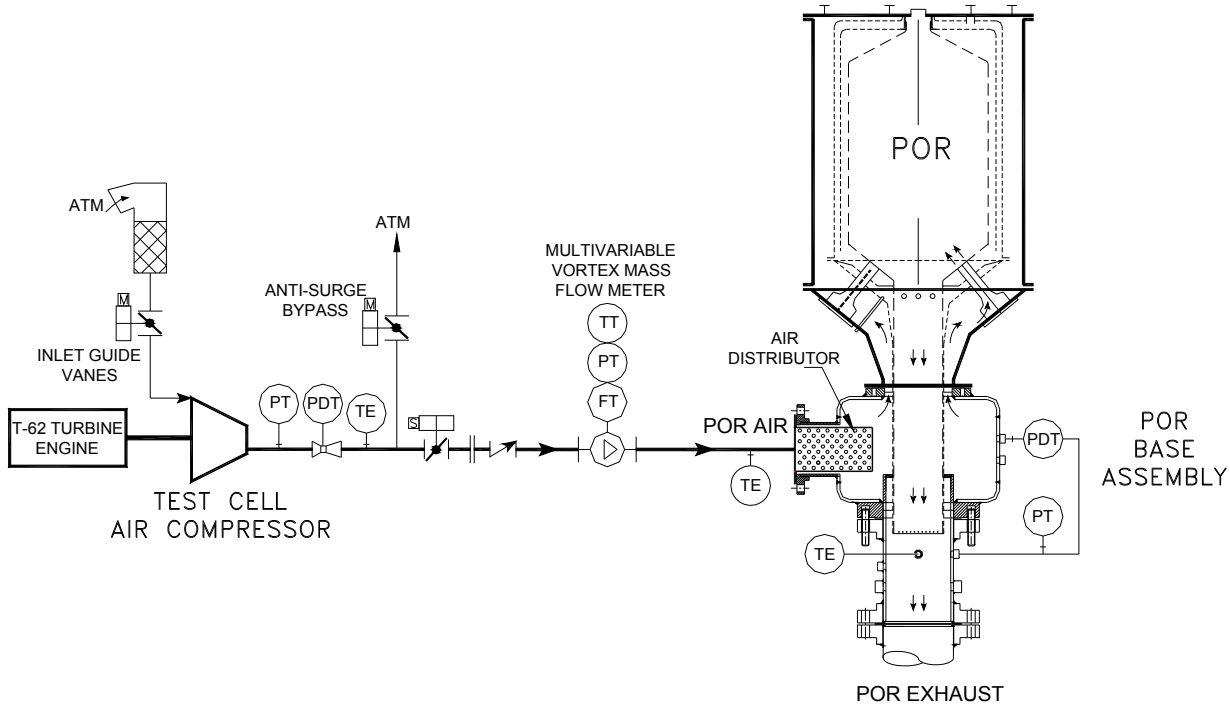

Figure 27 Test Cell POR Air Supply Schematic

Source: Gas Technology Institute

Typical test conditions for the cold-flow tests are given in Table 6.

Table 6. Cold-Flow Test Conditions

Source: Gas Technology Institute

POR Test Conditions	air flow (pps)	pressure (psia)	Temperature (°F)
Test 1 Set Inlet Conditions	2.4	60	350
Value at Outlet	2.4	57.6	350
Test 2 Set Inlet Conditions	1.2	60	300
Value at Outlet	1.2	58.3	300

For reference purposes a typical cold flow correlation is shown in Figure 27. If the measured data do not produce a straight line passing through the origin, then the tests will be repeated after the instrumentation has been checked. This type of preliminary test, in addition to supplying important information, provides a check on the accuracy of the instrumentation used on the rig.

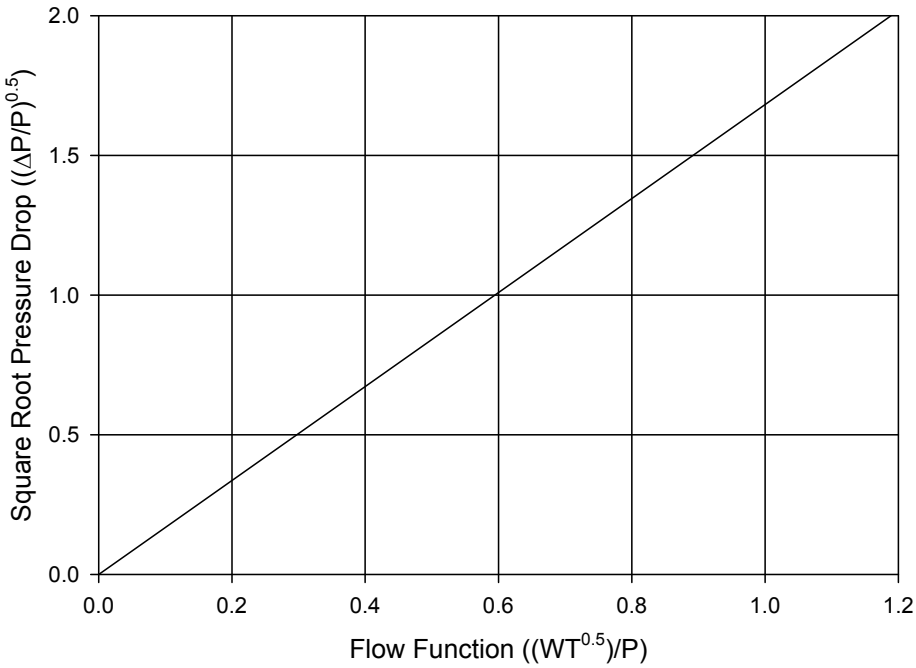

Figure 27- Typical POR Pressure Loss Characteristic

Source: Gas Technology Institute

Task 2 Performance Evaluation – Light-off

Before performing the light-off tests, the operation of the torch igniter was characterized. This torch ignition system essentially is a small diffusion flame combustor that injects its exhaust as a hot gas jet into the reactor. The torch was provided by Solar and is a standard unit, as employed on one of Solar's engines. The torch has its own air and fuel supplied from external facility sources. Ignition is provided by a spark type igniter and the natural gas fuel is injected through a modified liquid fuel atomizer. The torch for the proof-of-operation tests was mounted on a test-bench that has the necessary utilities available and was arranged to fire into a temporary exhaust duct at ambient pressures. These utilities include an air supply system that can provide air at pressures up to 80 psia, and a fuel supply system that can provide natural gas at pressures up to 120 psia. In addition, all necessary spark-plug leads and the high tension igniter box was provided. The operation of the spark was verified visually before light-off tests were initiated.

Estimates of the airflow passing through the torch when employed on an industrial gas turbine were obtained from Solar. This air flow was delivered to the torch and measured externally. The spark plug was then energized and the natural gas was delivered to the torch fuel injection system. In a similar fashion to the air management system, the fuel flow also was measured by an equivalent system. With air and fuel flowing to the torch and the spark igniter system energized, light-off of the torch was determined visually. Different fuel flows were tried and the selected level provided the best light-off. A range of fuel-air ratios that provided the required light-off was also determined. Following these initial tests, the torch was mounted to the POR and the ignition or light-off tests were repeated. Air was flowing through the POR during these tests, but no start up or main fuel was injected. The ability of the torch to project a flame into the

POR reactor was visually determined by viewing the operation through the sight-port mounted to the dome of the POR. No any problems were discovered. At the point that the torch is viewed as working well, the light-off tests of the POR was initiated.

The first series of "hot" tests were conducted to determine if the POR could be lit by the torch, while operating in a fuel-lean mode, and be able to transition quickly through the stoichiometric point to fuel-rich operation. Light-off tests was performed over a range of overall equivalence ratios from roughly 0.1 to 1.4. It should be noted that light-off was using a partial premixed charge of air and start fuel. Start fuel flows through a dedicated tube secured in the center of each injector nozzle. The start fuel tube releases this fuel near the injector nozzle exit where it combines and partially mixes with air flowing in the injector nozzle before the mixture is swept into the reaction chamber. An adequate level of air and start fuel mixing was used for light-off purposes; a start-fuel firing rate of 40 to 70 pph was actually applied. Another light-off method that was tested involves injection of start fuel at continuously increased levels, equivalent to 0.37 to 0.90% of the maximum fuel flow under lean conditions in the beginning and rich conditions at the end. This version was finally used for POGT start-up conditions.

The light-off tests was attempted at air mass flow rates, pressures and temperatures estimated from analyses of the Spartan performance at low speeds. These estimated mass flow rates were later checked against actual engine light-off speeds and a compressor map. The maximum air flow rate for light-off was on the order of 1.0 lb/s and testing covered the range of 0.5 to 1.0 lb/s. Air flow rates to the POR was measured using the arrangement described earlier. Fuel flow in the test cell is measured using a thermal dispersion mass flow element sized to measure up to 0.5 lb/s (1800 pph).

A nominal set of inlet conditions to the POR has been created that illustrate typical light-off settings. These are shown in Table 7. The intent of this table is to provide an idea of the various inlet condition levels that were used

Table 7- Light-off Test Conditions

POR Tests	Inlet Pressure (psia)	Inlet Temperature (°F)	Air Mass Flow (pps)	Fuel Mass Flow (pps)
Test 1 Light-off	30	290	0.5	0.83
Test 2 Light-off	30	290	0.5	1.17
Test 3 Light-off	30	290	0.5	1.50
Test 4 Light-off	30	290	1.0	1.67
Test 5 Light-off	30	290	1.0	2.33
Test 6 Light-off	30	290	1.0	3.00

At the light-off testing, the transition from lean to rich operation was accomplished at the speed of the start fuel control valve, and, Tasks two and three were actually combined. That is, after light-off and transition was accomplished, the variation in stoichiometric ratio series of tests was to determine methane conversion levels.

During the start up and transition from the lean light-off conditions to the fuel-rich operating soichiometric ratio, the liner wall thermocouple temperatures were recorded with time period of 3 sec.. It was important to determine the response time of the liner wall to the transition through the stoichiometric temperature range. During these tests the fuel flow was increased after light-off at a predetermined rate. This fuel flow rate change provided estimates of the time spent at near stoichiometric conditions when the flame temperature approached the maximum. The test results were analyzed and are presented below.

It is estimated that the steady-state operating temperature of the wall with a gas temperature of about 2000°F will be on the order of 1700°F. Based on simplified unsteady state analyses it is anticipated that the response time of the walls will be on the order of minutes while the time taken to transition from the lean to rich conditions is on the order of seconds. Many response time tests were conducted, and it was confirmed that transition from lean to rich operating conditions is going really fast, during less than 20 sec, and internal wall overheating is completely excluded.

Task 3 Performance Evaluation—Fuel Conversion Efficiency

The fuel conversion efficiency is an important parameter that measures the degree of completeness of the partial oxidation process. This efficiency is particularly significant if the POGT is intended to produce syngas that can be used as a source of hydrogen or as a feedstock in the production of liquid fuels. This fuel efficiency also provides a check on the POR design process. Because the reactions under rich conditions are generally much slower than, and are not as well characterized as, those under lean conditions, it is important to know exactly what are the residence times and reaction temperatures required to convert a given level of methane (CH_4) fuel. The initial results will generally direct the remainder of the test program. If insufficient CH_4 reacts in the POR at the design point conditions, then the airflow rate through the system (constant equivalence ratio) will be lowered to increase the overall residence time. Tests at different airflows will be made to determine the air flow that provides a high CH_4 conversion (above 95%). Tests will also be run at higher air flows and with varying equivalence ratios. The results of these tests will be used to determine correlations of the conversion efficiency with residence time and equivalence ratio or reaction temperature. If possible, tests will be made at increasingly higher airflows until the conversion efficiency is on the order of 60% while operating at a reaction temperature of about 2000°F. At this point, with measured conversion efficiencies ranging from 60 to 95+%, testing will stop. No reaction steam will be added during these tests; the only water/steam used will be for cooling purposes downstream of the reactor.

To determine the CH_4 conversion efficiency, the test cell features a thermal mass flow sensor to provide an accurate measurement of POR natural gas flow. Thermal mass technology does not require correction for changes in process temperature and pressure and also has a benefit of greater turndown capabilities. The exhaust of the POR will also be analyzed using primarily gas chromatography (and mass spectrometry if needed) to determine the concentrations of CH_4 and also H_2, and higher hydrocarbons in the exhaust gas stream. In addition, continuous gas analyzers will be employed to determine total hydrocarbon levels (THC), carbon monoxide

(CO), carbon dioxide (CO2) and nitrogen oxides (NOx) as nitrogen dioxide (NO2). (The samples for the on-line gas analyzer will all involve "conditioned samples" with water and particulates removed). The total mass flow of the exhaust will be determined from the sum of the measured air and the fuel mass flows. Knowing the concentration (and the molecular weight) of CH_4 in the exhaust gas stream, usually as a mole fraction, a mass flow of CH_4 exiting the POR can be determined. The conversion efficiency as a fraction is simply one minus the ratio of the exit to the inlet CH_4 mass flows.

To accomplish the above described methane conversion efficiency, the reactor conditions will be set (after light-off) to a fuel rich condition with an equivalence ratio of approximately 2.4. The air mass flow rate used will be the maximum available while the inlet temperature will be whatever is provided by the facility supply at a pressure of 60 psia. Typical POR inlet conditions are shown in Table 4.

At these conditions the equivalence ratio will be adjusted to provide a reaction temperature between 2000 and 2100°F. The reactor wall temperatures will be monitored to ensure that they do not exceed 1800°F. If wall temperatures higher than 1800°F are discovered then the fuel flow will be increased until the temperatures drop to below 1800°F. The conditions at this initial test point will be noted. The fuel flow will then be increased in steps until the methane conversion efficiency is less than 60%. These tests will be repeated at a lower airflow (at near constant pressure and temperature) so that the effects of both residence time and reaction temperature (in the form of the reaction equivalence ratio) on the methane conversion efficiency can be determined. The airflow rate that provides the highest methane conversion at the 2000°F reaction temperature will be noted.

Table 8- Inlet Test Conditions - Methane Conversion Investigation

POR test	Inlet Air Mass Flow (pps)	Inlet Pressure (psia)	Inlet Temperature (°F)	Fuel Flow Rate Range (pps)
Test 1 Max. Flow	2.4	60	380	0.25-0.4
Test 2 75% Flow	1.8	60	380	0.18-0.3
Test 3 50% Flow	1.2	60	380	0.125-0.2
Test 4 25% Flow	0.6	60	380	0.06-0.1

At each of the test conditions outlined in Table 3, the exhaust gas stream will be analyzed, not only for its methane content, but also for each of the likely important constituents. The measurement of the carbon monoxide and carbon dioxide concentrations will be carried out using standard EPA approved equipment such as those using non-dispersive infra-red techniques. The measurement of low molecular weight (hydrogen and methane) compound concentrations as well C_2- C_6 hydrocarbons will be made using a Varian portable gas chromatograph. During POR tests, measurements of POR exhaust gas parameters will include: pressure, temperature, carbon dioxide (CO_2) concentration, carbon monoxide (CO) concentration, C_2-C_6 compound concentrations, hydrogen concentration, and methane concentration.

Task 4. Exhaust Composition

In this task, there will be two series of tests, one aimed at investigating the effects of adding steam to the POR reaction section together with the fuel and air, and the other with adding steam to the dilution section only. Adding steam to the reaction section without compensating for the drop in reaction temperature (constant equivalence ratio) will tend to reduce the conversion levels of methane. However, there will be only a narrow reaction temperature "window" that provides sufficient reactor stability if constant equivalence ratios are maintained when adding steam.

Adjusting the reaction zone temperature by reducing the fuel flow as steam is added can provide a constant reaction temperature and the needed stability. This change in stoichiometry to a state more oxidizing than when no steam is added will change the composition such that a higher level of CO_2 will be present. The concomitant reduction in CO concentrations may lead to lower levels of H_2 being produced. However, if the steam levels are high enough, the H_2 levels may increase due to a greater percentage of the CO being involved in the "water-gas shift" or reformation reactions. This latter effect also will require that sufficient residence time be available in the reactor to ensure that the slow shift reactions reach equilibrium.

Adding steam to the POR reaction section will significantly change the exhaust composition and will in general increase the H_2 concentration in the exhaust when compared to the non-steam case at the same equivalence ratio. If the equivalence ratio is adjusted when steam is added to maintain the same reaction temperature, then the CH_4 levels may or may not increase depending on the available reaction residence times. The added steam mass flow will tend to reduce the effective residence times for reaction when compared to the same temperature conditions without steam, and this reduction could lead to less CH_4 being reacted. Residence time effects on exhaust CH_4 concentrations will be investigated together with the direct effects of steam addition. Such residence time effects will be determined through variations in the total mass flow through the POR reactor section. The ratios of fuel-to-air and fuel-to-steam will be maintained near constant during these tests, or at levels that are close to optimum in terms of stability and conversion efficiency. Steam addition will also impact formation of soot; dedicated tests to evaluate soot issues in the POGT are planned later during operation of the converted Spartan turbine. While soot is a concern, current turbine designs firing oil incorporate provisions to accommodate some degree of soot formation, and under POR operation intense flue gas recirculation patterns are created, which also are expected to suppress soot formation. Soot measurements are planned during dedicated tests with the Spartan POGT-converted turbine engine at the turbine exhaust.

A possible set of test conditions that will demonstrate the effects of steam addition in the reaction zone on the exhaust composition is given in Table 5. The flow conditions provided are approximate and may be changed based on the test results obtained. All of the tests will have an inlet air temperature of approximately 380°F and a pressure of 60 psia. The actual fuel flows

used will be those that maintain the reaction zone at a constant and predetermined temperature, which probably will be around 2000°F. The residence times for these tests will be maintained approximately constant. A second set of tests will also be undertaken to determine the effects of residence time on the exhaust composition.

Table 9- Reaction Zone Steam Addition Effect Tests

	Air Flow Rate (pps)	Fuel Flow Rate (pps)	Steam Flow Rate (pps)
Test 1 Baseline	1.8	0.3	0
Test 2 Reduced Equiv. Ratio	1.8	0.3	0.05
Test 3 Reduced Equiv. Ratio	1.8	0.2	0.1
Test 4 Reduced Equiv. Ratio	1.8	0.2	0.15

The tests outlined in Table 6 will yield data that provides an idea of the effect of changing residence times on the exhaust gas composition. However, the actual levels of air, steam and fuel mass flows may be different from those shown. It is anticipated that a "baseline" condition will be chosen that provides stable and reproducible conditions such as Test 1 in Table 6. The mass flows of air, fuel and steam would then be increased, maintaining constant ratios to reduce the effective residence time within the reaction zone. The ratios may be changed by varying the fuel flow during testing to maintain a near constant reaction temperature.

Table 10- Residence Time Effect Tests

	Air Flow Rate (pps)	Fuel Flow Rate (pps)	Steam flow Rate (pps)
Test 1 Baseline	1.8	0.25	0.05
Test 2 Reduced Residence Time	2.0	0.278	0.055
Test 3 Reduced Residence Time	2.2	0.305	0.061
Test 4 Reduced Residence Time	2.4	0.333	0.067

This increase (from the baseline level) in mass flow through the reactor reduces the residence time and will move the product gas concentrations away from their equilibrium levels. Non-equilibrium products such as ethylene and similar compounds may be found in the exhaust. Such compounds may be desirable for converting natural gas to liquid fuels without resorting to the Fischer-Tropsch process. The conversion of ethylene compounds to liquid paraffin-type fuels is well understood and can produce a near pure compound rather than "synthetic crude".

It is anticipated that the results of the tests outlined in Tables 5 and 6 will provide a detailed performance map of the reaction zone in terms of being able to predict exhaust compositions based on the input flows of air, fuel and steam. These results will be applicable at some predetermined optimal reaction temperature, which is likely to be around 2000°F, and could be varied during testing. The effects of operating pressure on the rich-reactions are likely to be small, in the range under investigation. Operation at pressures greater than 4 atm is not possible with the proposed rig, and it is likely that pressure effects will not be noticed unless pressures of around 10 atm are employed. In addition, tests in Table 5 and 6 tests will provide operational data to evaluate the POR fluid mixing state. A judgment as to the level of mixing achieved will

be made through analysis of POR temperature profiles, visual examination of reaction chamber videos, and model simulations.

A series of tests similar to the above will be made in which varying steam flow rates will be added to the exhaust of the POR reaction zone in the form of a "dilution steam." The POR reaction section conditions will be fixed during these tests at levels that maximize methane conversion. These conditions are unknown and will have to be set based on the results of Task three. Steam will be added in increments of 0.05 lb/s starting at a flow rate of approximately 0.1 lb/s. The testing will end when the temperature leaving the dilution section is approximately 1500°F. This reduction in temperature from about 2000°F in the reactor to between 1500 and 1600°F in the exhaust is provided by dilution with steam. The effect provided by the shift reactions is largely unknown and these tests should provide insight into the temperature reduction mechanisms occurring in the dilution section. The hydrogen concentrations in the exhaust will be measured and correlated as a function of steam flow rate. These results will allow estimates to be made of the needed operating conditions to produce a high quality syngas. Tests may also be performed at reactor conditions that do not maximize the methane conversion. A decision on whether or not to perform additional testing will be based on the results obtained.

Adding steam after the main reactions have occurred will tend to maximize the hydrogen content, but will reduce the overall LHV due to the dilution effects of the required extra steam and the minimization of the methane exhaust concentration. In order to maximize the hydrogen content of the exhaust and the methane conversion efficiency, steam would be added after the main partial oxidation reactions have taken place, that is, after most of the CH_4 has been reacted to CO, CO_2, H_2, and H_2O. This water gas shift reaction where the H_2O reacts with the CO to produce more H_2 will take place adequately at the lower reaction temperatures in the small diameter section of the POR referred to as the dilution section. This shift reaction is exothermic in nature and will tend to slightly increase the POR exhaust gas temperatures. It may be necessary to add extra steam (over and above that needed for the shift reactions) to dilute the hot gases in order to reduce the temperature to around 1550°F. This extra steam will ensure that the shift reaction equilibrium is pushed toward a point where it maximizes the H_2 concentration.

Furthermore, test results will form the foundation for plans to transition into and conduct the first demonstration of POGT operation on a converted Solar T-350 turbine engine.

A partial oxidation reactor was successfully designed, fabricated, and assembled in compliance with POGT process requirements. Conceptual evaluations utilized standard turbine design and engineering practices; detailed design methods employed the latest engineering tools such as CFD modeling and finite element analysis. Fabrication and construction was performed by an experienced, world class precision metal and turbine component manufacturer. Design analysis considered mechanical integrity and safety as paramount. With the experimental POR assembly-built, a flexible and functional platform now exists to continue and advance research and development of POGT technology. POR proof of concept testing in dedicated test cell are

planned next followed by POGT performance tests with the POR mounted on a prototype Spartan T-350 turbine test engine converted for POGT operation.

2.2.3. POGT Unit Design, Fabrication and Test Plan

INTRODUCTION

Development activities to make a real experimental demonstration of POGT technology were conducted. The effort involved design, fabrication and assembly of a prototype POGT Test Unit based on a Spartan 200 kW turbine generator package; five tasks involved in the completion of this effort are listed below:

1.) Construction and performance characterization of prototype POR assembly to replace a conventional turbine lean burn combustor.

This task was completed and a review presented in report Sections 2.2.1 and 2.2.2.

2.) Conversion of a turbine to run under POGT mode of operation. A Solar Spartan 200 kW turbine generator was selected.

POGT operation by definition operates using the products of partial combustion as the working fluid for the expansion turbine. Conversion of conventional turbine design required complete removal of the existing combustion system and replacement with a partial oxidation reactor (POR). The POR design described in Section 2.2.1 was specifically built to connect with a Spartan engine.

Modifications were also required to reduce combustion airflow and to increase total fuel flow. The reduction in combustion airflow can be accomplished either by compressor modifications or by bleeding a portion of airflow from compressor discharge. For the Spartan conversion, it was more appropriate and cost effective to utilize the air bleed approach. Increases in fuel flow were made in a straightforward manner through the proper selection of the natural gas supply line sizes and the appropriate control valves.

Changes were made with internal engine passages and components to prevent air ingress into the hot fuel gas stream from the POR and also to minimize the escape of partial combustion products. Distribution of an inert gas medium (steam and or nitrogen) was integrated in the engine proper for both structural cooling and minimization of air ingress. A redesign of the engine seal plate was required as well as plugging off cooling ports in the turbine exhaust duct. The inert gas was introduced through the Spartan engine casing, where new ports were installed and connected to an external distribution manifold.

3.) Design, fabrication and construction of a custom mechanical hook-up assembly to facilitate the POR to Spartan interconnection.

With the POR assembly connected to the Spartan engine, differential expansion between the engine and outlet tube of the POR was a concern. A hook-up assembly with a bellows expansion element was placed in between the POR and Spartan to counteract these thermal

growth issues. This bellows allows the inner POR hot section expand relative to the casing and also loads the interference joint where the POR outlet tube slips into the engine scroll inlet collar.

4.) Development of a POGT engine control and safety management system. New logic was required to start, accelerate; regulate engine load and safely stop the engine if a process trip condition is detected.

POGT is unlike a conventional gas turbine because it generates two products (electricity and fuel) and operates under rich combustion conditions. To control engine under rich operation a new control system was created. The existing electro-mechanical control system was removed and replaced with a microprocessor-based system consisting of single loop process controllers combined with a PLC. The control system configuration automatically started the engine and controlled engine parameters during trials.

5.) Modifications 1 through 4 were completed and a POGT prototype test rig was made ready for testing. A test plan to verify predicted performance characteristics was developed and presented.

A review of POGT conversion tasks 2 through 5 for the Spartan 200 kW turbine follows.

Task 2—Bleed Air Review

There were a number of different variants of the Spartan turbine manufactured by Solar Turbines Incorporated (Solar) during its production life. These variants ranged from recuperated and simple cycle power generators to bleed flow machines used for starting aircraft jet engines. The particular engine that was modified by GTI to a partial oxidation gas turbine (POGT) started life as a standby generator set for a telephone utility company. In order to perform as a POGT the airflow entering the partial oxidation reactor (POR) has to be considerably less than the flow that would enter the standard combustor that the POR replaces. To achieve this flow reduction the simplest approach was adopted; this consisted of bleeding air from the compressor exit in a manner similar to that used by the Spartan bleed machines. Because no drawings can be found of the Spartan bleed port area the actual port size was estimated from photographs and existing associated parts such as the check valve and the motorized butterfly valve. From these sources the bleed port size was fabricated from stainless steel tubing with a nominal 4″ internal diameter (ID); Figure 28 is a picture of the converted Spartan engine housing with the port. A 4″ butterfly valve in the picture was not required in the test rig..

The bleed variant of the Spartan provides a maximum of 120-pounds-per-minute (PPM) flow of air at 54-psia. Other documents refer to 130-PPM at the same pressure. These flow rates quoted were for zero power output and were assumed to be the maximum flows that were allowable before compressor surge was encountered. In the POGT arrangement there is unlikely to be any surge problems because additional mass flow in the form of steam and extra natural gas is added in the POR and helps to drive the turbine. This additional mass flow when combined

with the much higher turbine volumetric flow and specific heat allows the maximum power (200-kW) to be produced while bleeding some 175-PPM of air from the compressor discharge.

It is not clear from available data just what the actual maximum flow is that can pass through the 4-inch bleed port. It is estimated (from performance analyses) that the desired bleed flow of 180-PPM can be bled from the Spartan compressor (when operated as a POGT) with a small reduction in output power. This bleed flow provides a reasonable balance between the POR reaction temperature (2000 ºF) and the turbine inlet temperature (1575 ºF) while maintaining the power produced.

Task 2—Turbine Cooling and Air In-Leakage to POR Hot Gases Review

A schematic of the Spartan engine is given in Figure 28. Modifications were made to the engine compartment to eliminate potential in-leakage of air with the hot gases from the POR. Air can leak around the pins from the compressor discharge duct into the turbine scroll section. Another area downstream of the pins the outer wall of the hot gas sheet-metal scroll joins the cast wall of the turbine inlet section. This is a "slip-fit" (required for assembly), the tightness of which is unknown. It is possible that air will leak into this area but it is difficult seal, so thermocouples were installed to monitor area for locally high temperatures. A similar situation also is present where the inner scroll wall joins the downstream face of the cast turbine duct. Again this will have to be monitored for local high temperatures during operation. A picture of the Spartan combustor scroll is given in Figure 29, which shows bolts with drilled through cooling passages to the turbine nozzle.

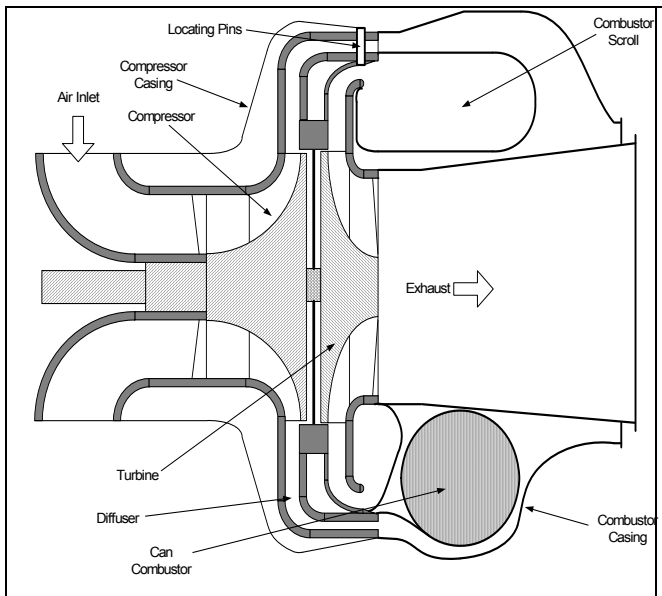

Figure 28. Spartan Engine Schematic

Figure 29. Spartan Combustor Scroll with new cooling passages for inert medium for POGT

Task 2- Seal Plate Review

Another important modification required before the Spartan was operated under POGT condition was minimizing air that current designs let purposely leak into the combustor exhaust (for cooling) at the inlet to the turbine. When operated as POGT, this air can create a high temperature hot-streak in the exit stream that could damage the turbine. To minimize or eliminate this airflow, which is between 1 and 2% of the total airflow (around 68 scfm), the shaft seal plate located between the compressor and the turbine wheels was redesigned. The redesigned seal plate is show in Figures 30 and 31.

Figure 30. Seal Plate Components

Figure 31. Seal Plate Assembly

In operation this seal system will have to be pressurized with steam or nitrogen supplied from an external source. Currently the test cell is equipped to supply either medium; during tests nitrogen was used, however. The seal consists of a disk with a rim and an inboard concave section that tapers to an inner circular hole through which passes the shaft connecting the compressor and turbine. Mounted on the turbine side is a second thin sheet metal disk that is trapped by an inner ring. This second disk is allowed to move and provides a leaky seal between the back face of the turbine wheel and the seal plate proper. The seal plate rim is axially trapped between the inner compressor housing and the back wall of the turbine inlet. Radially the seal is maintained in position by a cylindrical wall section; section view of this region is given in Figure 31. The new seal plate was designed with a number of radial slots that run from the rim to the space formed by the concavity of the inner wall on the compressor side. These slots would match similar ones in the cylindrical wall. There is a space radially outboard of this cylindrical wall and it should be possible to bring steam/nitrogen lines into this space to feed a manifold attached to the outer wall of the cylindrical pocket. This manifold would also have exit holes that matched those in the cylindrical pocket wall. Thus steam/nitrogen could flow radially inward through these multiple holes.

An alternative consideration was to inject steam/nitrogen into the space on the turbine side that directly connects to the POR exhaust. This may be a simpler modification but probably is not as effective in reducing the air leakage flow.

The steam/nitrogen lines feeding the manifold would enter this space through holes drilled in the wedge shaped diffuser vanes that are integrally cast in the inner compressor casing. Matching holes in the outer casing would allow connection of the lines to an external steam source. Instead of using straight axial oriented tubes to feed the steam to a manifold it may be possible to angle the tubes so that they penetrate directly into the concave space on the compressor side of the seal.

Figure 31 provides a better view concerning the seal plate purge scheme; it shows steam and/or nitrogen is supplied from nine 3/8″ diameter ports added to the compressor casing side. This flow is supplied from an external 1″ ring manifold (not shown here) where upon entering the engine fills a cavity next to the diffuser and above the outer rim of the seal plate. Flow from this cavity is distributed through passages in drilled through bolts to cool the turbine nozzles and also through slotted passages in the seal plate. Flow from the seal plate exits near the engine shaft and acts to buffer the ingress of air along the shaft to the turbine inlet. This is a critical design to deliver extended engine service.

Modification requirements were summarized and work to insure no in leakage of air into the hot gas stream from the POR was subcontracted to Alturdyne. An engineering report with detailed drawings showing the changes made to the engine is attached to the Appendix. This was achieved by substituting steam for the air cooling and leakage flows associated with the standard engine. Work consisted of the following activities:

- Add 4″ diameter bleed air port
- Install new steam manifold and injection system
- Redesign and rebuild engine seal plate
- Modify turbine nozzle bolts
- Plug holes in Zee section of engine exhaust duct
- Refined seal plate design; the plate design was adjusted during the course of testing. Details are include in the report attached in the appendix

Task 3—Spartan-POR Interconnection Hook-up Review

To facilitate interconnection of the POR assembly to the converted Spartan engine, a custom designed Hook-up assembly was required. Initially, a direct slip pressed fit arrangement was planned, similar to the way the existing combustor is mated to the inlet scroll. After consultation with Solar, a bellows element was inserted into the interconnection arrangement as a precaution against damage due to thermal growth differences between the engine and POR outlet tube and to provide isolation between the engine and POR reactor. Further consideration about the design brought about another addition, which provided another location to inject steam for cooling in the POR outlet tube. Temperature control is critical for good turbine control and this extra steam injection provision was a useful feature in getting a handle on POR

outlet temperature. Two ½″ national pipe thread ports, directly opposed were added in the bellows inlet sleeve portion of the assembly and matching nozzles, were integrated in the extension spool pipe added to the POR outlet flange.

Figures 32 through 34 illustrate 3D models of the basic assembly design; major assistance was provided by Solar in finalizing the design. Figure 35 and 36 show the actual fabricated subassemblies and the completed hook-up unit, respectively.

The hook-up assembly consists of an inlet sleeve welded to a 6″ diameter corrugated multiply bellows made from alloy x. This inlet sleeve also includes two ports for added steam injection capability; in conjunction, the extension pipe spool shown in Figure 37 includes two ports at matching elevations to pass through the steam supply connection. This extension pipe spool bolts directly to the POR outlet flange; the other end is fabricated with a Marmon clamp fitting, which mates to Marmon clamp fitting contour on the engine casing.

The outlet side of the bellows is welded to a machined ring with an internal manifold for distribution of an inert gas through 30 0.156″ diameter holes. Inert gas is supplied from a single feed tube and then split to two ports 180° apart. The machined ring at the bellows outlet is made to slip and press fit into the inlet collar of the turbine scroll. Flow of inert medium can be either steam or nitrogen; it is independently supplied through a spare port on the engine casing previously used for igniter service.

The bellow's inlet sleeve slips into the outlet tube from the POR; a similar machined ring is welded on the POR outlet tube. The POR machined ring inert medium is steam, which is supplied from the POR cooling steam compartment. The purpose of both machined rings is to provide a flow of inert gas, distributed through small holes which flood and buffer the slip fit region, such that the ingress of air is prevented from mixing with the POR hot gases.

The POR assembly itself is secured in the test cell and supported independently, floating off a spring mount system from a dedicated structural table frame. The mechanics of assembling these components consist of a sequence starting with placement of the bellows assembly's

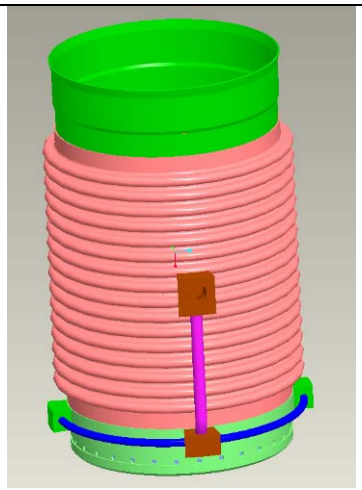

Figure 32. Model of Bellow

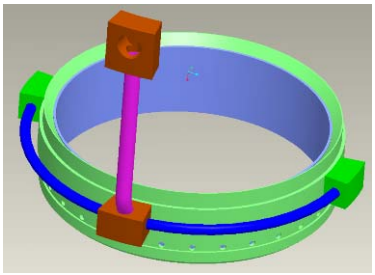

Figure 33. Model of Bellows

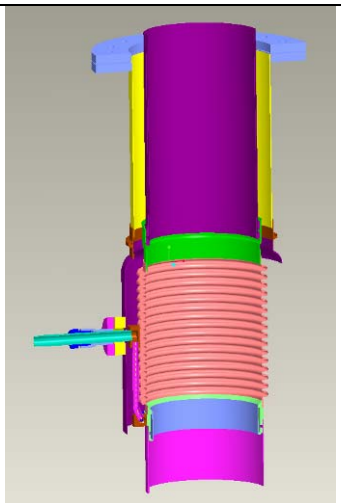

Figure 34. Model of POR-

Assembly	Outlet Seal Ring	Spartan Interconnection
Figure 35 Hook-up Assembly Components		**Figure 36. Hook-up Assembly**
		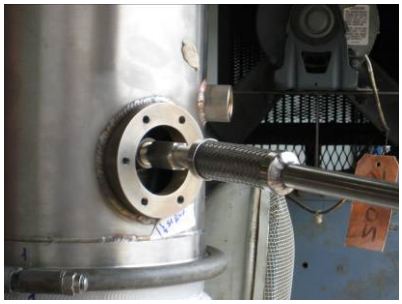
Figure 37. POR Outlet Extension Pipe Spool	**Figure 38. Bellow assembly installed**	**Figure 39. Extension Pipe Spool Steam Injection Port.**

machined ring in the Spartan inlet scroll collar illustrated in Figure 38 At the same time the POR extension pipe spool is bolted to the POR outlet flange. Inert gas is supplied to the machined ring at the engine scroll collar and is then connected through the engine casing port. The POGT engine, secured in a structural framed base, is now moved, centered, and aligned underneath the axis of the POR outlet. The POGT engine and generator frame is gradually elevated; as the unit elevates the inlet sleeve of the bellows slides into the extension pipe spool and eventually engages the POR outlet machined ring. The engine elevation is set after a satisfactory fit of the Marmon clamp connection located on the converted Spartan engine casing. Figure 39 shows the Marmon clamp engaged and one of the new steam dilution ports.

After the Marmon clamp is secured, assembly of the new steam injection port components are completed. A detailed mechanical drawing set, titled DSK 20297 is attached to the Appendix for further review. An overall interconnection diagram of the POR-Spartan interconnection is shown in Figure 40. Figures 41 and 42 are pictures of the integrated POGT test rig situated in the test cell ready of operation.

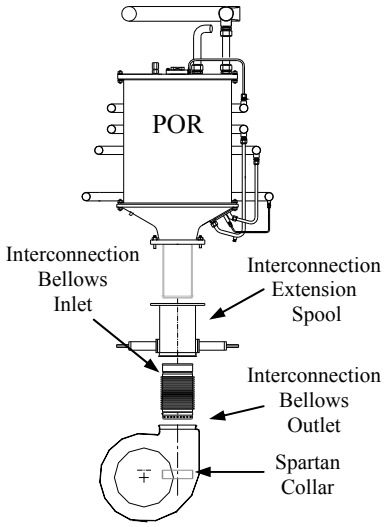

Figure 40. Schematic of POR to Spartan Connection

Figure 41. Picture of assembled POGT Unit

Figure 42. Picture of POGT unit in Test Cell without air intake

Source: Gas Technology Institute

Task 4.—POGT System Control

Development of a control system for the POGT test rig was a challenging task; all team members contributed and successful implemented of a semi-automatic protocol that managed torch ignition; main flame light-off; engine acceleration; transition from lean to rich combustion in the POR; and speed regulation under self-sustained operation was accomplished.

The POGT test cell control platform consists of an A-B Micro Logic PLC and Siemens 353, stand-alone process controllers. A personal computer National Instruments I/O interface system provided data acquisition and archiving function of test cell instrumentation. An overview diagram of the POGT test rig process streams and instrumentation is shown in Figure 43. Steam flow is distributed among process, cooling, and dilution services. The natural gas is divided between start and main fuel streams. A small amount of fuel was also combined with cooling steam and dilution steam for process evaluation. Nitrogen was used as an inert medium for the seal plate and the buffer medium at the Spartan scroll inlet connection. Bleed air was released at the turbine compressor as well at the POR. Hot deionized water flow was atomized and combined with dilution steam to provide additional cooling of the POR exhaust. The POR also included a vent port from its steam compartment for the purpose of regulating the reaction chamber top metal skin temperature.

BACKGROUND

The control system initial development efforts involved both empirical and theoretical modeling evaluating the low load or low rpm conditions that the Spartan experiences during starting and acceleration. The analysis involved static algorithms for a given speed and TIT.

The speed can be varied down to approximately 20% of the maximum level. For each speed a reaction temperature is estimated, and then for a given air bleed and steam injection rate a turbine inlet temperature is determined and a fuel flow calculated. The reaction temperatures or turbine inlet temperature values are adjusted to produce a reasonable fuel schedule as a function of speed. An acceptable fuel schedule is based on experience and on whether or not the calculated turbine performance falls within established ranges.

Key parts of the analysis consisted of scaling the design point compressor temperature rise and turbine inlet flow function to other speed conditions. These data are then used with Euler's standard torque equations (and empirical torque coefficients or slip factors) to estimate the power produced by the turbine. Frictional losses were ignored, and for lean operation, this is generally acceptable. When operating rich and with high steam flows, the working fluid entering the turbine has a much higher viscosity than those under lean conditions.

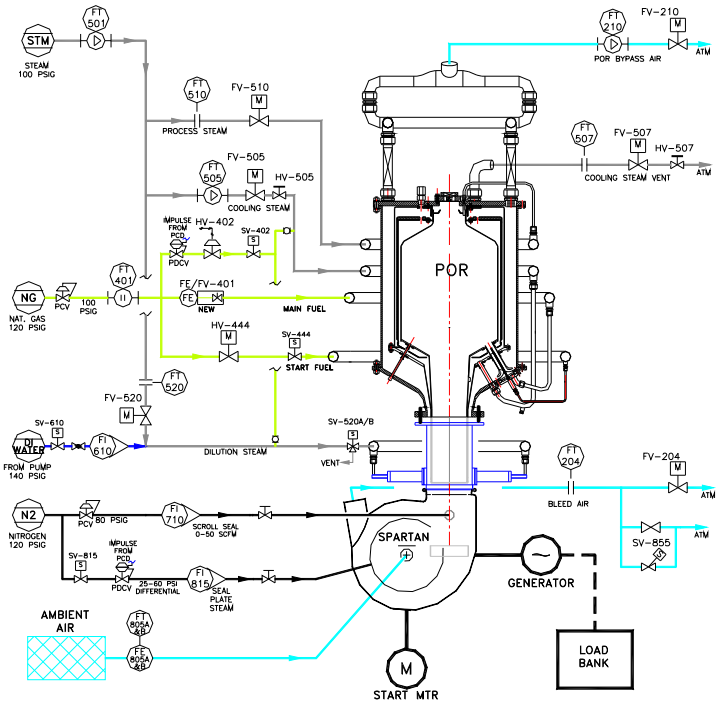

Figure 43 POGT test rig process streams and instrumentation

Source: Gas Technology Institute

POGT CONTROL MODEL PROJECTIONS

Because the reaction temperatures are assigned the calculations involved are iterative with the operator within the "do-loop." The first cut estimates of the Spartan performance using this series of procedures are provided in the three figures shown below. Figure 44 shows the assumed reaction temperatures and calculated turbine inlet temperature levels (for given bleed and steam flows) as a function of engine speed.

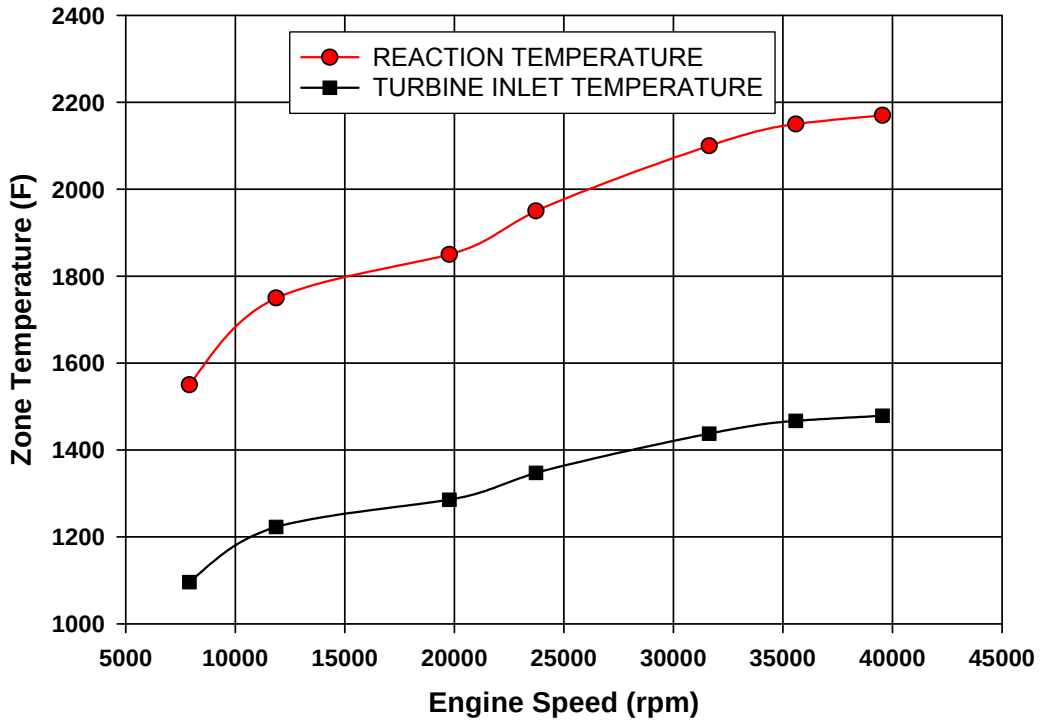

Figure 44- Key Temperature Levels
Source: Gas Technology Institute

Although the reaction temperatures have been assigned, they are based on past experimental data relating speed and turbine inlet temperature. The curve as shown is made up of two curves—the low—speed section represents operation requiring external energy to be supplied while the high—speed part corresponds to self-sustaining operation.

The air bleed flow rate and the corresponding air flow rate entering the POR is shown in Figure 45. This bleed flow corresponds to the turbine inlet temperature and reaction temperatures shown in Figure 44. In Figure 46 the steam and fuel flows are shown as a function of engine speed. Again these flows match those needed to provide the turbine inlet temperature levels of Figure 44 for the input reaction temperatures. As presently envisioned the three key flows—fuel, steam and bleed air—will all have to be scheduled together as a function of time following the indication of a successful ignition. This figure shows the changeover from fuel-lean to fuel-rich operation starting at 23,000 rpm approximately. This corresponds to a reaction zone of 1950 and 2000 °F (see Figure 44). The sequence of events for light-off and acceleration is covered in more detail in Section 3.0 below.

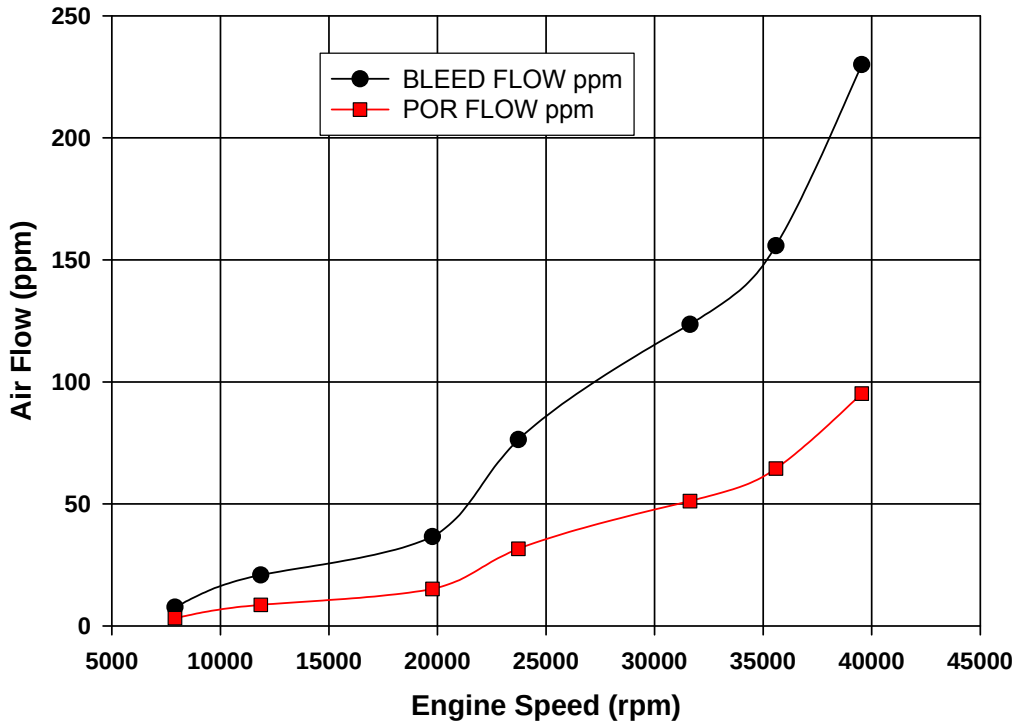

Figure 45 Proposed bleed and POR Air Flows

Source: Gas Technology Institute

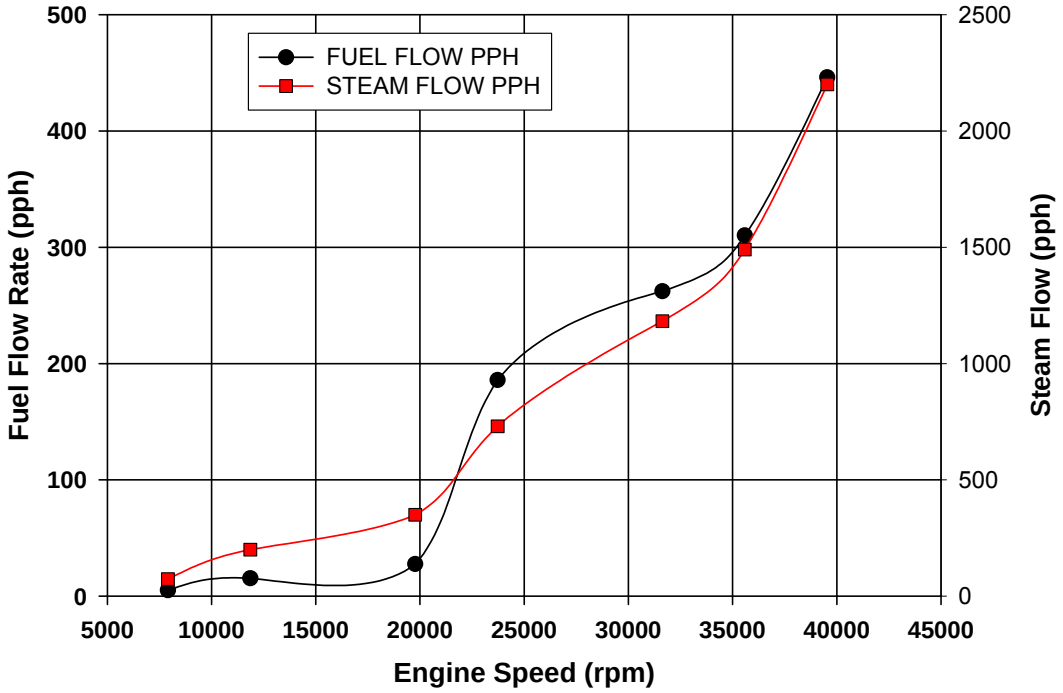

Figure 46 Proposed Fuel Schedule and Associated Steam Flows

Source: Gas Technology Institute

Based on experimental data describing the light-off and acceleration of the "standard" Spartan, a possible start sequence showing the schedule of the key flows is provided in Figure 47. These estimates are for a "production engine" start where it is desirable to have the shortest possible time between ignition and full-power.

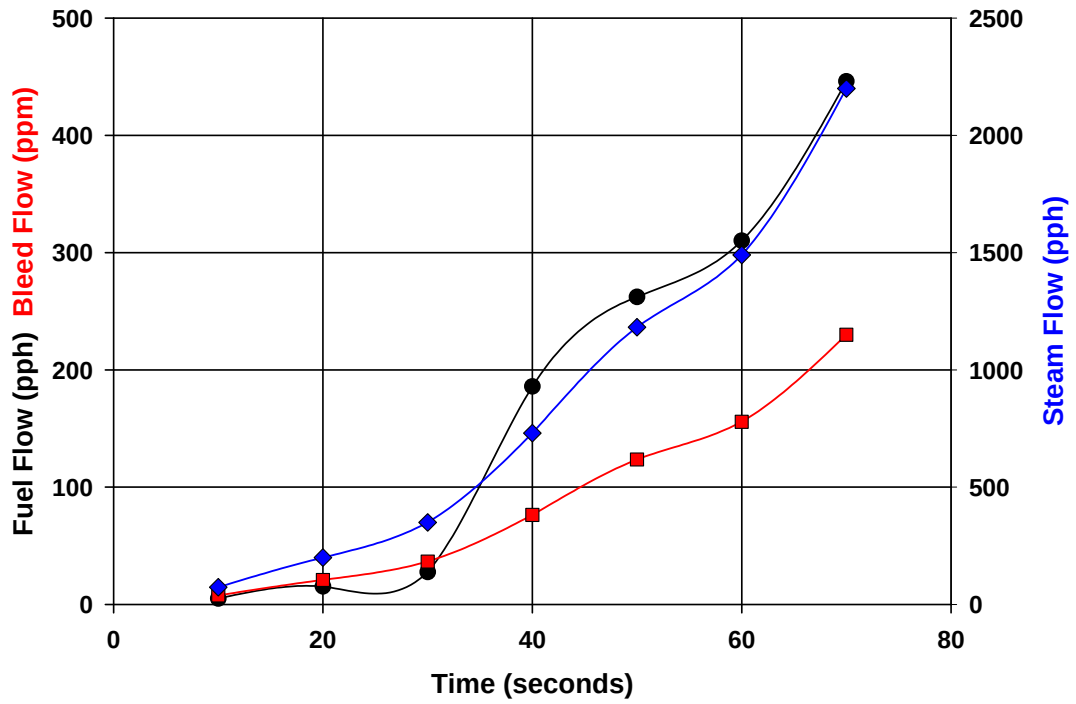

Figure 47 Production POGT Start Characteristics

Source: Gas Technology Institute

For the Spartan POGT test-bed unit, a schedule of flows more like those shown in Figure 48 will be needed. The curves shown in Figures 47 and 48 would "bend" at the desired operating condition or just before and become parallel to the abscissa. In essence, these flows would be held constant at a particular speed and load condition. To minimize complexity, this asymptotic relationship has not yet been incorporated into the analytical model.

The data points in Figure 48 have been connected by straight lines rather than with a "spline-fit" curve. This eliminates the droop of the fuel curve at low speeds (see Figure 47), which is an artifact of the curve-fitting routine. Implicit in the curve of Figure 47 is the assumption that the starter motor can operate for at least 90-seconds. At approximately the 90 second point, the Spartan POGT should be self-sustaining at a speed of around 23,000 rpm, and rich operation would commence. It should be emphasized that this proposed schedule of flows is not the only possible set and others could be developed. It is, however, an approach that fits well with the recent POR test data.

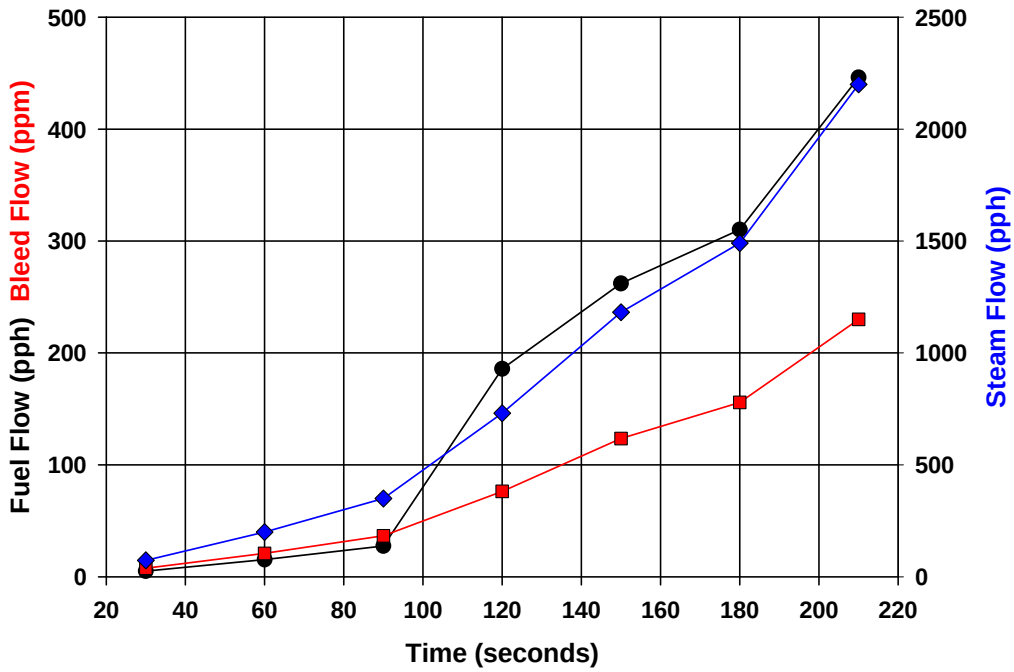

Figure 48 Spartan POGT Test Bed Scheduled Flows

Source: Gas Technology Institute

A summary of the data used in generating the graphs presented here is given in Table 10.

Table 10 Summary of Calculated Low Speed Data

Source: Gas Technology Institute

ENGINE SPEED (RPM)	39540	35586	31632	23724	19770	11862	7908
SPEED (%)	100.00	90	80	60	40	30	20
REACTION TEMP. (F)	2170	2150	2100	1950	1850	1750	1550
TURB. INLET TEMP. (F)	1478.73	1467.09	1437.71	1347.42	1285.74	1223.11	1095.72
BLEED FLOW (PPM)	230.00	155.80	123.57	76.36	36.58	20.87	7.67
STEAM FLOW (PPH)	2200.00	1490.24	1182.00	730.42	349.87	199.65	73.37
POR AIR FLOW (PPS)	1.587	1.075	0.852	0.527	0.252	0.144	0.053
FUEL FLOW (PPH)	446.11	310.14	262.13	185.83	27.60	15.34	5.05
POWER OUT (kW)	192.94	168.14	132.87	48.82	12.10	3.55	0.28
POWER EFFICY. (%)	7.38	9.25	8.65	4.48	7.48	3.95	0.93

These data as mentioned earlier were generated using simplified low-speed analytical models, one for lean and the other for rich operation.

To match all of the flows and develop suitable turbine inlet temperature levels, the bleed flow at the maximum speed is 230 ppm. It is assumed that this will be made up of 180 ppm through the main bleed port and 50 ppm through the bleed ports at the POR dome. The split between the two bleed flows at the lower speed points has not been fixed. It is likely that they will both have to be scheduled separately, which adds to the complexity of the control system. As a first cut, the dome bleed valves could be opened first and scheduled to provide the needed bleed

flows as a function of speed or time up to a maximum of 50-ppm. At this point the main bleed valve could be opened and the needed bleed flow rates increased as a function of speed or time.

POGT CONTROL MODEL START SEQUENCE

The relationship between engine speed and time for the arbitrary fuel schedule shown in Figure 6 is provided as Figure 49.

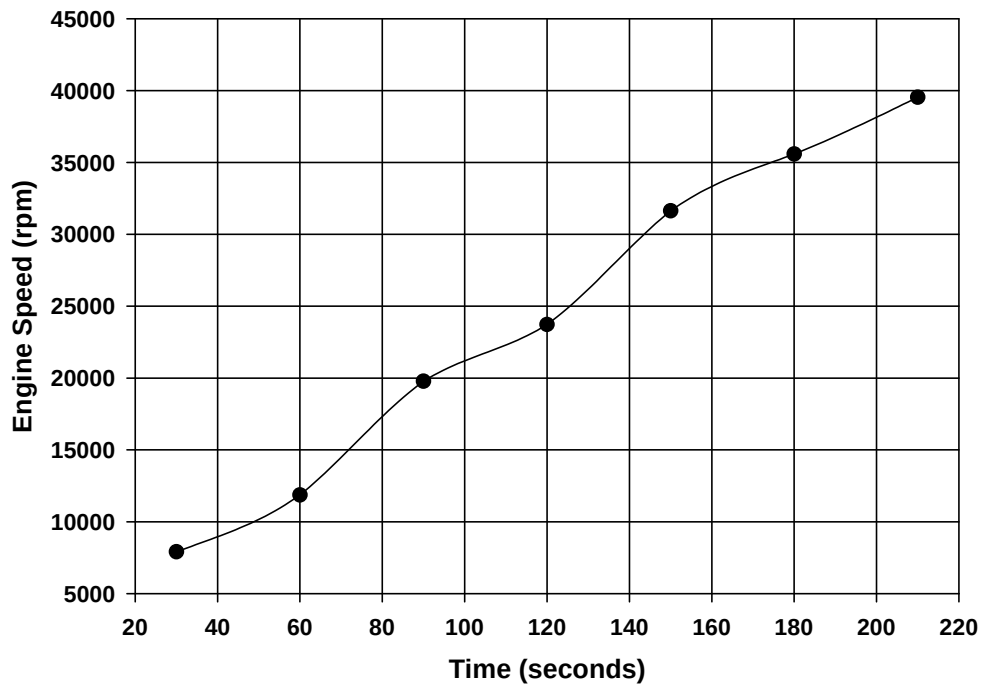

Figure 49 Proposed POGT Acceleration Schedule

Source: Gas Technology Institute

Initially the starter motor was energized and the steam flow to the POR started. After a 10-second delay, the air and fuel flows to the torch will be initiated and the ignition exciter energized. Approximately 2 seconds later the fuel solenoid valve was opened, and then the start-fuel control valve operated to ramp up the flow rate from zero at the 12-second point to approximately 5 pph at 30 seconds after the starter motor was turned on. The delay time of the motorized control valve is unknown and this had to be factored into the above scenario if it cannot provide the desired fuel flow at the 30-second point. Ignition was anticipated to take place between the 20-and 30-second points. After ignition was sensed, the fuel control system was designed to increase the fuel flow as a function of time. The engine speed was also sensed and the fuel flow adjusted if forward projections of the speed do not match those of Figure 48. By differentiating or by finding the local slope of the actual fuel versus speed curve (assuming that it is made up of a series of straight lines), estimates could be made of the speed at some predetermined later time. If the projection indicated that the speed was lower than desired level, then the fuel flow was increased. The fuel was reduced if the projected speed was higher than that required by Figure 49. This process was repeated every second to ensure that a "run-away" condition did not develop. The air bleed valve was opened initially at a determined time

period between about 10 and 20-seconds after ignition was sensed. This allowed the POR to heat-up and facilitate the injection of steam. The flow at the point of opening the bleed valve(s) was approximately 7.7 ppm (see Table 10 for other associated conditions). The steam-flow rate was checked and set at 73.4 pph when the air bleed valve was opened (assuming that the steam temperature is 270 °F).

Both the air-bleed and steam-flow rates were increased as a function of increasing engine speed or alternatively as a function of the fuel flow. (Through the engine speed these two flows will be connected to the fuel flow). The steam flow or possibly the fuel and air bleed flows would be changed as needed to maintain the desired turbine inlet temperature. The turbine inlet temperature was measured directly and checked against the curve shown in Figure 50. Typically the rate of change of turbine inlet temperature versus speed will be determined and the level at some later time estimated. If this projected level is too low (see Figure 8), the steam flow rate will be reduced, and if too high, the steam flows will be increased. This is the same process to that proposed above for matching fuel flow rates with speed and can be repeated at say 1-second intervals.

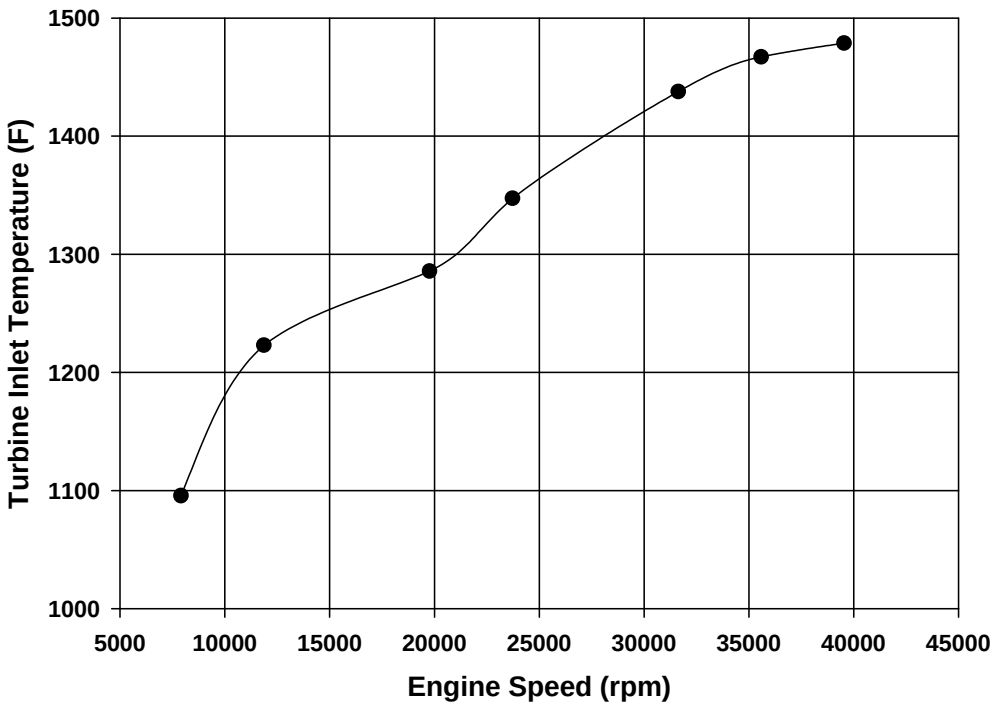

Figure 50 Proposed Turbine Inlet Temperature Schedule

Source: Gas Technology Institute

If varying the steam flow did not change the turbine inlet temperature within a specified period, then the fuel flow was decreased in the lean mode (below 23,000 rpm) and increased in the POGT mode (above 23000 rpm). If this failed, the bleed flow was either reduced or increased depending on whether the reaction zone of the POR was rich or lean. As a last resort, the engine was shutdown.

When monitoring the changes in turbine inlet temperature, if the rate of change was excessive by more than three times the expected level, then the system would be shut-down by closing the fuel solenoid valve and opening all of the air bleed valves. Other safety precautions, such as the continuous monitoring of the exhaust (stack) temperature, were also taken. If the level exceeded some predetermined value typically between 1,200 and 1,300 °F, then again the engine would be shut-down.

Between 24,000 and 25,000 rpm the Spartan-POGT generator set should be flashed and a preprogrammed load schedule applied. This would be the point when a production unit would switch to a steady-state control mode. This control mode would potentially use a preprogrammed schedule of fuel flow as a function of load and speed as control bases. Because the response times of the rig fuel control valves are likely to be slower than those used on a production system, it was recommended that loads be applied to the generator shortly after the switch to fuel-rich operation and the engine is self-sustaining. With slow fuel valve responses, the applied loads will minimize the risk of the Spartan accelerating rapidly to unsafe speeds. In production units the POGT would simply transfer to the steady-state control mode, which as mentioned above probably will be based on a sensed load and be "topped" with speed. After such a transfer, if there were no loads applied, the engine would accelerate rapidly until the (rapid response) fuel control valves decrease the fuel flow to a no-load condition. The maximum speed reached probably would be on the order of 110% of the maximum load speed. A possible schedule of fuel flow versus load is shown in Figure 51. A related curve that describes the variation of fuel flow with speed is provided in Figure 46.

A recommended schedule of applied load as a function of speed for the Spartan-POGT is shown in Figure 52. This is a recommended curve however it will probably have to be modified somewhat as experimental data is obtained. This generalized framework of an approach suitable for starting and operating the Spartan POGT appears to be feasible and safe. Additional analysis and reviews should be made to determine exactly what schedule of fuel flow versus time is the most suitable and sustainable. An approximate mathematical model of the steady state operation of the Spartan POGT is being created and will be made available shortly in the next report.

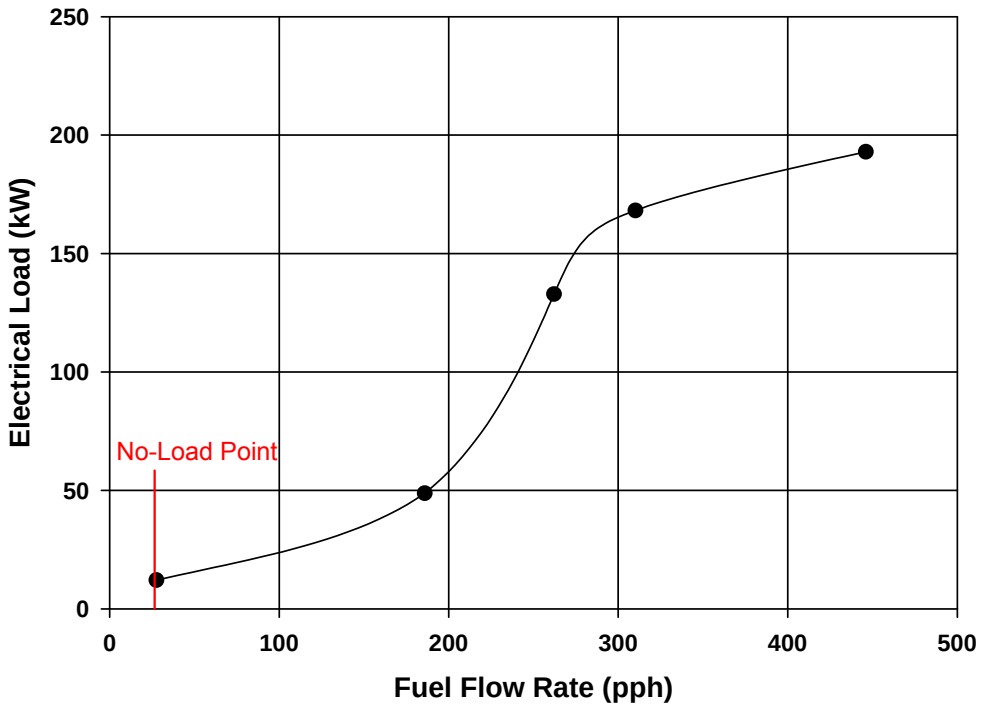

Figure 51. Proposed Fuel Flow – Load Schedule

Source: Gas Technology Institute

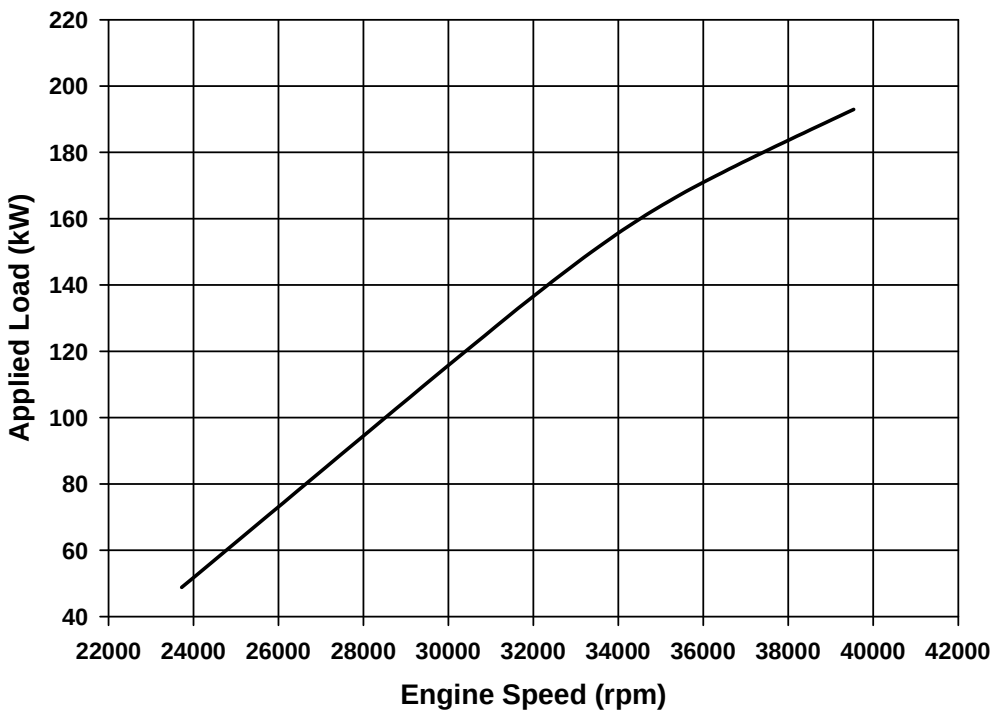

Figure 52. Recommended Rig Load Schedule

Source: Gas Technology Institute

POGT CONTROL SUMMARY

Using results obtained from the model as a guide, design of an actual POGT control system started and a working system was successfully configured. The developed control scheme worked off the existing control platform in the test cell; sequencing and safety logic for the POGT engine was implemented in the A-B Programmable Logic Controller and regulatory control of fuel, air, and steam scheduling was handled in the Siemens 353 process controllers. Speed regulation of the POGT was performed from a prototype voltage regulator with capability to modulate the load to the test cell load bank and maintain speed at set point. The start logic uses a ramp-time-based protocol for scheduling the fuel, air, and steam system flows. Ramp and time values were finalized through trial and error. Upon reaching stable operation, the ramp function is disabled, and independent adjustment of different valve position is made to satisfy the test plan condition.

A brief operation narrative describing the POGT start-up is presented. Upon turning on the power, system valves are automatically driven into a safe position (for this description it is assumed that all process streams are in service). The operator begins by depressing the "Ready" push button on the central control panel; this triggers a command that sets the positions of POGT to a ready-to-start state. At this time, dilution steam starts, and flow is diverted to vent through a three-way automated valve. In addition, the 24 Vdc rectified power box is turned on, and a timed capacitor bank charge circuit is activated.

Upon timing out of the capacitor charge circuit, the operator initiates ignition of the POR torch. The torch exciter is turned on from a hand selector switch on the panel and followed immediately with activation of the torch start command, which starts the simultaneous flow of torch gas and air. A check of torch temperature is required to verify proof of torch flame.

With the torch lit, the operator can start the POGT. The POGT engine starts by depressing a pushbutton which initiates system logic programmed in the PLC. The PLC sends out a signal that triggers the ramp command configured in the Siemens controllers. This initiates POGT fuel, air, and steam flows. Simultaneously the engine start motor is activated and the engine accelerates; POR combustion chamber start fuel flow achieves light off, and after a time delay, main fuel flow come on. Over the next 40 to 50 seconds, engine acceleration continues up to the speed set point of the voltage regulator speed controller. Over this same time, POR fuel, air, and steam flows follow the controller ramp instructions up to the ramp endpoint. Combustion in the POR transitions from lean to rich automatically as a consequence of the ramp protocols. At the run start command, nitrogen flow to the seal plate is automatically started, and the nitrogen purge to the inlet scroll connection is manually opened.

This control scheme described worked effectively and allowed POGT parametric tests to proceed in a timely and safe manner. It is obvious, however; that further refinement of a POGT protocol is needed in support of the technology and its commercialization efforts.

A detailed description of the control system architecture was created could be made available upon request.

2.2.4. POGT Unit Testing

As described in the previous chapter of the report, conventional Spartan T-350 was retrofitted to a POGT unit. The original Spartan compressor was used in the unit and because only about half of the compressor discharged air was used as a combustion air, the other half was vented to the atmosphere through a bleed port and POR bypass. In the POR, compressed air reacts with natural gas and process steam under substoichiometric condition to produce hot syngas which as a working fluid expands in the turbine to generate power. The POGT was operated using a GTI engineered control and instrumentation system.

Test Plan

The POGT unit has been equipped with a comprehensive automatic and remote controls including control of the following parameters: engine speed; start-up and main fuel flows; total, combustion and bleed air flows; cooling, process and dilution steam flows; turbine inlet temperature additional control through saturated water injection to the dilution steam, etc. Using this control system, required variations of the POGT parameters during the unit's operation could be set up.

For the POGT performance testing, the following variables and their ranges were selected:

- Engine speed which defines the unit load, 75—90 percent
- Combustion air to fuel ratio, stoichiometric ratio, 0.3—0.7
- Turbine Inlet Temperature 1300—1450 F
- Flame temperature, 1950—2200 F,
- Back pressure at engine exhaust, 1—28 in. H20

A test matrix for the planned POGT performance testing is presented below in Table 11.

Table 11. Test Plan for POGT Evaluation
Source: Gas Technology Institute

		TEST MATRIX				
Test Series	**Test #**	**Speed, %**	**SR**	**Flame T, F**	**TIT, F**	**BP, inWC**
1-Speed	1	***85***	0.6	2050	1350	1
	2	***75***	0.6	2050	1350	1
	3	***90***	0.6	2050	1350	1
2-SR	4	85	***0.7***	2050	1350	1
	5	85	***0.5***	2050	1350	1
	6	85	***0.3***	2050	1350	1
3-TIT	7	85	0,5	2050	***1300***	1
	8	85	0.5	2050	***1380***	1
	9	85	0.5	2050	***1450***	1
4-BP	10	85	0,5	2050	1350	***10***
	11	85	0.5	2050	1350	***16***
	12	85	0.5	2050	1350	***28***

Four series of tests were planned. In each of the test series, one of the major parameters (speed, SR, TIT and BP) was considered as a main variable. The flame temperature is not considered an independent variable and was held constant. The effect of major variables on the major POGT output parameters were analyzed.

It required many test trials to develop the startup procedure including a sequence for all of the operations. During POGT startup, it was necessary to provide transition from lean to rich combustion during the acceleration of the engine while keeping overall startup time about 40 seconds (similar to conventional gas turbine of this size) and without exceeding the allowable turbine inlet temperature and EGT. Once the startup procedure was developed, it was implemented in the control system, and successfully tested. In the Figures 53 and 54 below, the POGT parameters during startup are presented. The curves were plotted from the recorded data during POGT-Boiler testing on March 14,2008. Transition from lean to rich condition occurred about 25 to 30 seconds after "push-button" where the flame temperature and turbine inlet temperature reached the maximum and gradually went to lower readings. Fuel flow and the calculated equilibrium ratio have a delay due the long response time (about 1 minutes) for the natural gas flow meter. According to the low inertia transmitters, the engine speed, air flow, and temperature approached stable readings at the 40th second.

The startup procedure and control sequence of operation were used for all POGT performance testing presented later.

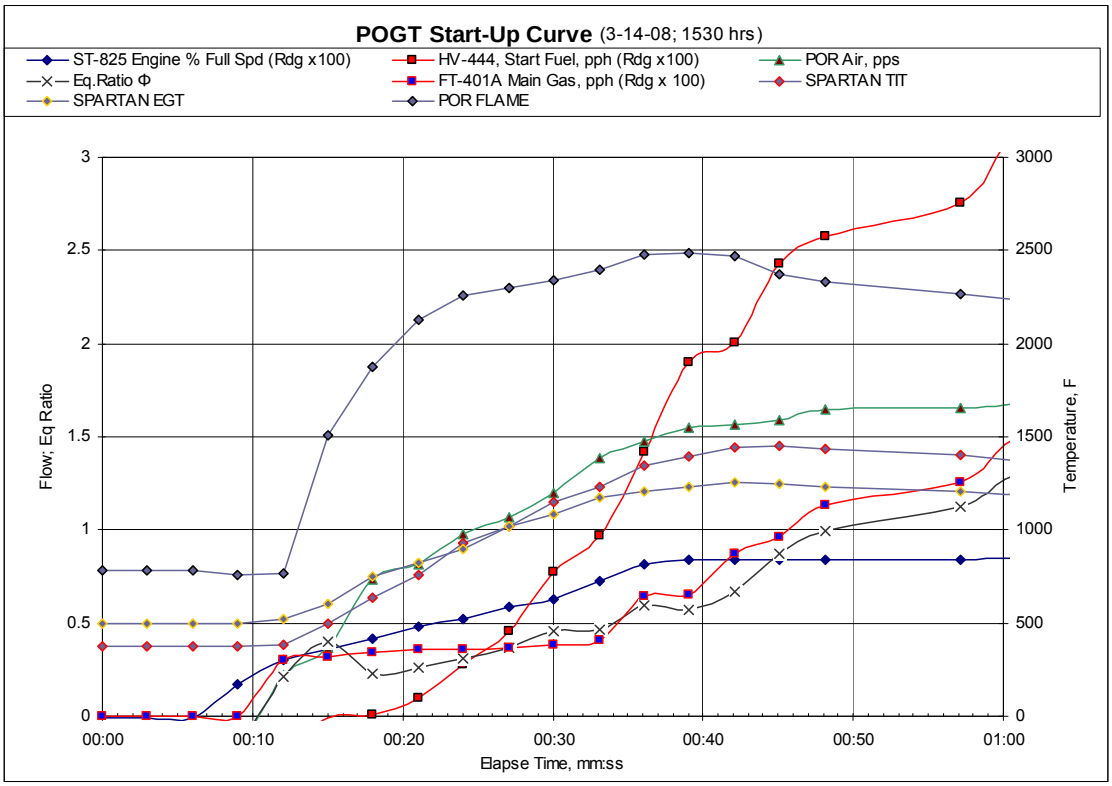

Figure 53. Fuel Flow and Temperature during POGT Start-Up

Source: Gas Technology Institute

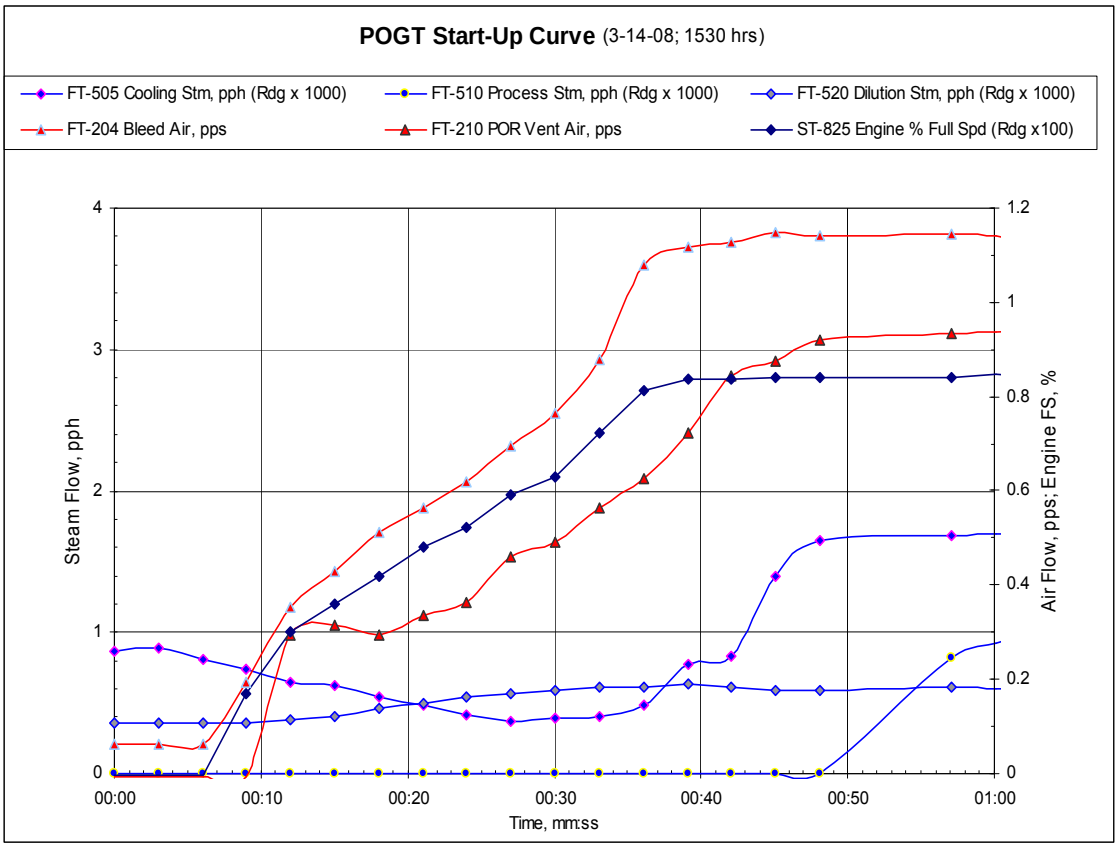

Figure 54 Steam and Air Flow, Engine Speed during POGT Start-Up
Source: Gas Technology Institute

After startup, the POGT was operated at required flows of air, fuel, and steam as defined in the plan test matrix. Based upon the recommendations from industrial partners and the "first-of-a-kind" partial oxidation operation for the unmodified expander of the Spartan turbine, the POGT was operated (in the majority of the tests) at somewhat lower turbine inlet temperature (below 1400 F) compared to the design turbine inlet temperature of 1600 F. This general conservatism for research testing of the first POGT prototype was followed to avoid any risk of local overheating or related problems. No turbine inlet temperature related problems arose during any of the testing.

Seventeen POGT tests with up to 130 minutes duration each were conducted and analyzed. A total of 17 hours of POGT operation were logged during the POGT performance testing. About 160 process parameters were recorded by the data acquisition system during each test. A summary of the test variables along with major measured and calculated data is presented in the Table 12 below

Table 12. Summary of POGT Test Conditions and Key Measurements

Source: Gas Technology Institute

Date	Srart Time	Run Time min	Variables	Speed, %	NG, Total pph	NG, Main pph	Comb. Air pph	Steam Total pph	Expander Total Flow pph	SR	Back Pressure in. WC	PR	Flame Temp. F	TIT F	EGT F	Power, Measured, kW	Power, Actual, kW
11/20/07	4:19 PM	7	SR,TIT	84	560		6200	3900		0.65	0.8		2050	1300			
12/12/07	4:16 PM	19	SR, TIT	84	620		6000	3900		0.6	0.8		2000	1250			
12/12/07	5:19 PM	75	SR, FT, TIT	84	660		6200			0.55	0.9	2.33	2100	1400			
12/13/07	5:58 PM	46	RPM, SR, TIT	84 90	680		6500	3900		0.6	0.8	2.55	2100	1320			
12/14/07	4:52 PM	66	RPM, SR, TIT	75 84	520		5600	2700		0.6	0.8	1.94	2100	1550			
1/14/08	6:00 PM	21	SR, TIT,	84	470	180	5600	3445	9515	0.6	0.8	2.20	1870	1230	1070	34	61
			FT, BP		630	204	6590	3990	11210	0.8	30	2.44	2170	1440	1230	115	207
1/15/08	2:49 PM	98	SR, TIT, BP	84	460	177	5610	3450	9520	0.4	1	2.17	1990	1240	1100	53	95
					850	207	6520	3980	11350	0.8	27.5	2.43	2170	1410	1270	104	187
1/16/08	3:40 PM	94	SR,TIT,	84	426	158	5440	3490	9360	0.4	1.1	2.2	1990	1170	1070	46	83
			FT, BP		821	192	6370	4170	11360	0.8	28.2	2.43	2175	1390	1220	107	193
1/18/08	5:06 PM	74	RPM, SR, TIT	79	365	101	5240	2570	8175	0.32	1.1	2.14	1960	1210	1100	52	94
				86	1010	204	6420	4110	11540	0.8		2.51	2240	1470	1280	124	223
3/10/08	5:09 PM	12	SR, TIT,	84.5	333	112	5865	2850	9050	0.53	0.7	2.34	2030	1340	1160	78	140
			FT, BP		670	186	7200	4210	12080	0.8	8.1	2.57	2290	1490	1280	161	290
3/11/08	3:41 PM	14	SR, TIT,	83.5	319	113	5760	2690	8770	0.56	0.7	2.42	2030	1320	1160	122	220
			FT, BP	86	625	186	6580	3930	11130	0.8	2.5	2.58	2280	1490	1250	157	283
3/11/08	4:20 PM	63	SR, TIT,	82.5	300	97	5560	1770	7630	0.5	0.6	2.37	2020	1230	1100	97	175
			FT, BP	86	693	186	7270	4130	1290	0.8	2.9	2.58	2390	1490	1250	157	283
3/12/08	12:53 PM	35	SR, TIT,	83	400	139	5590	3380	9370	0.45	0.6	2.38	2010	1230	1080	104	187
			FT, BP	86	782	193	6570	4100	11450	0.8	2.5	2.63	2270	1500	1280	158	284
3/12/08	2:12 PM	130	SR, TIT,	84	378	122	5870	2470	8720	0.32	0.8	2.22	2040	1230	1150	34	61
			FT, BP	86	1145	254	7350	3920	12410	0.8	3.0	2.61	2350	1510	1300	159	286
3/13/08	1:32 PM	120	RPM, SR, TIT,	78	363	150 326	5440	1720	7520	0.25	0.8	2.01	2030	1240	1120	18	33
			FT, BP	86	1330		6660	3940	11930	0.8	2.9	2.57	2240	1450	1320	147	265
3/14/08	3:27 PM	48	SR, TIT,	83	365	138	5660	2720	8740	0.32	0.9	2.35	1990	1250	1100	84	151
			FT, BP	85.6	1156	261	6700	4110	11970	0.8	1.5	258	2290	1480	1280	146	263
3/14/08	4:30 PM	90	SR, TIT,	83	371	114	5680	1990	8040	0.25	0.8	2.24	2010	1250	1140	36	65
			FT, BP	85.3	1540	394	6850	3710	12100	0.8	2.8	2.52	2330	1480	1240	141	254
	Total Runs	17															

Data Analysis

The test data were processed and analyzed to evaluate the impact of changes in key POGT parameters included in the test plan. The effect of engine speed (load), turbine inlet temperature, and back pressure on POGT power output were determined. Three parameters of power output are considered:

- Measured Generator Power (Gen Power).
- Actual power output (Act Power) calculated as a sum of Gen Power and additional compressor power associated with the bleed and bypass air (As determined by experimental and Aspen calculated data, the Act Power is 1.8 times greater than Gen Power)
- Specific power output (Spec Power), calculated as power output per pound mass flow through the expander, kW/(lb/s) or kW/pps.

Effect of Engine Speed on POGT Parameters

Engine speed was varied in several tests at levels measured in RPM (revolution per minute) noted in the column "Variables" of the test summary (Table 12). In those test series, speed was varied from 75 to 90 % of full engine speed. Other parameters were kept in a relatively narrow range: turbine inlet temperature = 1330-1390 F; back pressure = 0.8-1.1 in.W.C; SR (stoichiometric ratio) = 0.6-0.7.

The effect of engine speed on the measured generator power is shown in Figure 55.

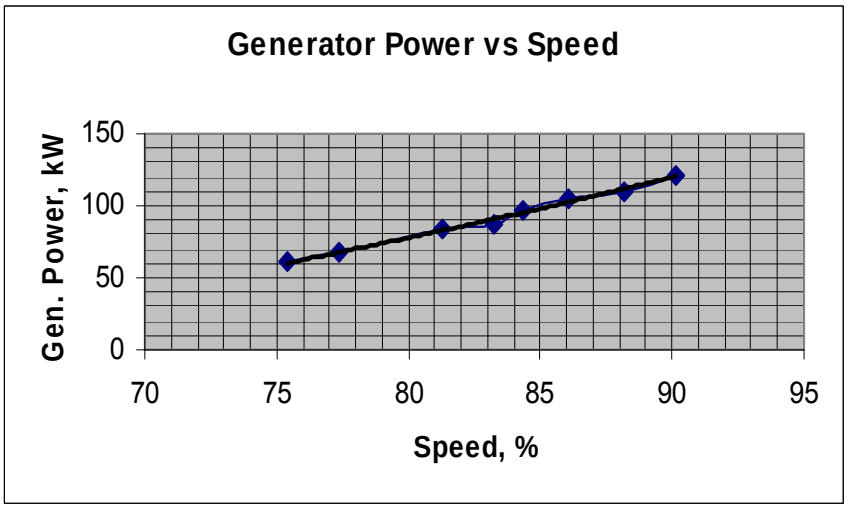

Figure 55. Generator Power measured vs. Engine Speed
Source: Gas Technology Institute

The effect of engine speed on other POGT parameters such as expander mass flow rate, pressure ratio, and actual power output are presented in Figure 56.

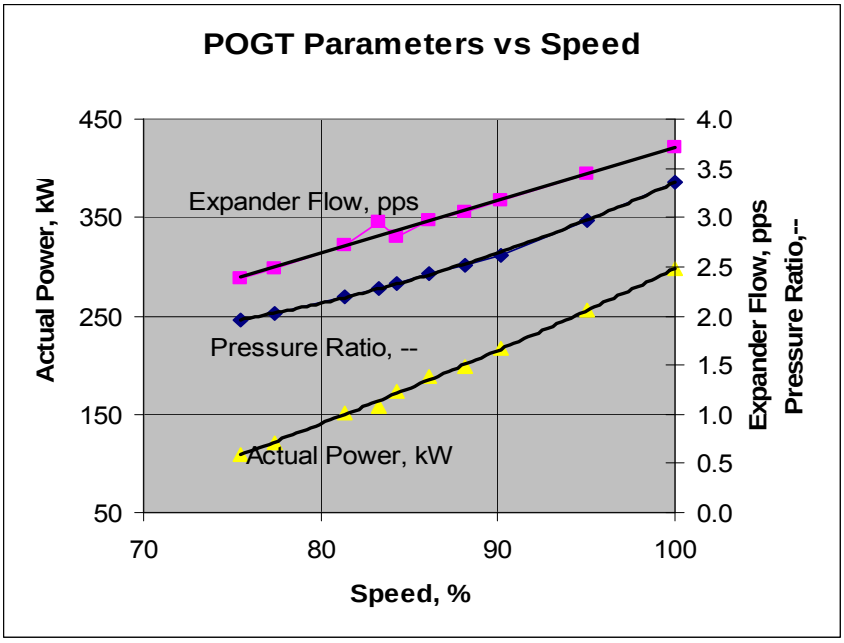

Figure 56. POGT Parameters vs. Engine Speed
Source: Gas Technology Institute

In Fig.55, only experimental data are used and presented. In Figure 56, experimental data are used in the speed range 75 – 90 %, and calculated data based on regression functions from the test data are used for the speed 95 – 100 %.

Comparison of power output from POGT and conventional Spartan shows that POGT is capable of generating 300 kW at turbine inlet temperature below 1400F while the Spartan output was 200 kW at turbine inlet temperature =1600F.

Specific Power output (kW/pps of expander flow) is even more favorable for POGT compared to Spartan.

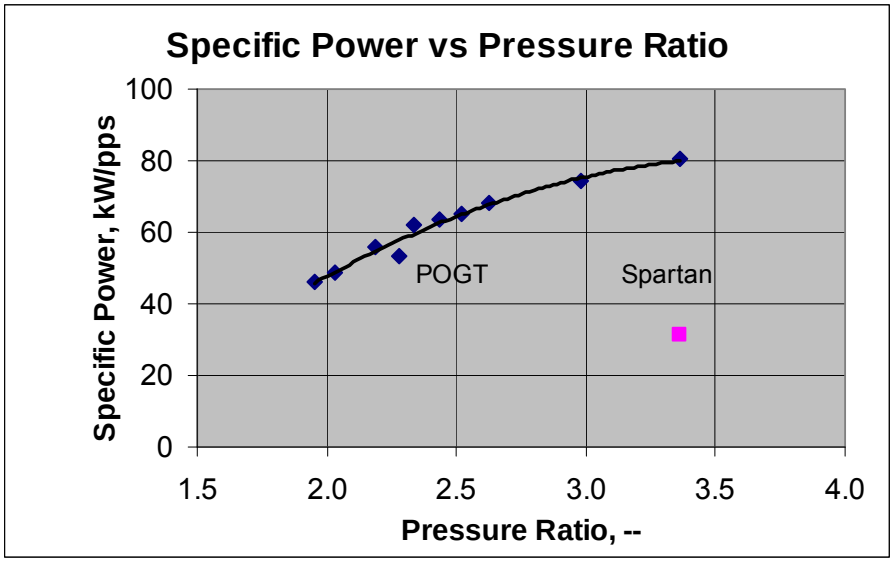

Figure 57 POGT and Spartan Specific Power Output

Source: Gas Technology Institute

Specific power for both POGT and conventional Spartan was calculated based on experimental data obtained during POGT and Spartan testing. The POGT was tested at different speed, while the Spartan was tested only at full speed with expander pressure ratio of 3.36. In Figure 57, the effect of pressure ratio on specific power for POGT and Spartan is shown. An analysis of the data indicates that there is about 2.5 times more power output per pound mass flow possible from POGT compared to the conventional Spartan.

Under another POGT sponsored project, ASPEN-based calculations of POGT performance were obtained for several commercially available gas turbines in the range of pressure ratio 3.5 to 20 to evaluate their potential performance if converted to POGT duty. In Figure 58, the results of calculations for both the POGT and conventional turbines are presented. The POGT potential specific power was calculated to be about 2.5 times greater compared to existing gas turbine. For a turbine operated at a pressure ratio of 20, the specific power was projected to approach a remarkable 350 kW/pps.

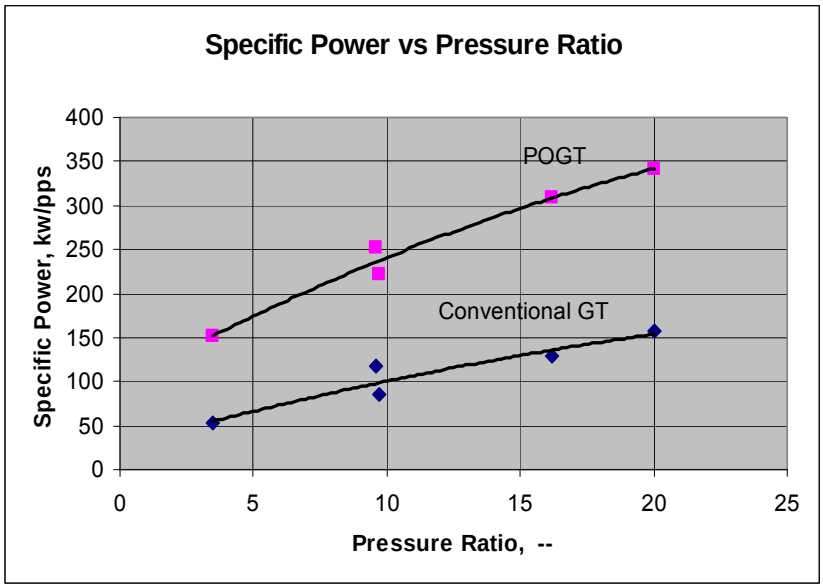

Figure 58. Specific Power Output for POGT and Conventional GT
Source: Gas Technology Institute

Effect of Turbine Inlet Temperature on POGT Parameters

In the majority of the POGT tests, turbine inlet temperature was a variable parameter. The range of the it variation is shown in the column "Variables" of the test summary Table 12. To evaluate the effect of turbine inlet temperature on POGT parameters, several tests were selected with turbine inlet temperature varied between 1310 and 1480 F. In these tests, the other parameters were in the following ranges:

- Speed 84 – 85%
- Back pressure 0.9 – 1.4 in H20
- Stoichiometric ratio 0.34 – 0.75

In Figure 59, the experimental data for measured generator power at different turbine inlet temperature are presented.

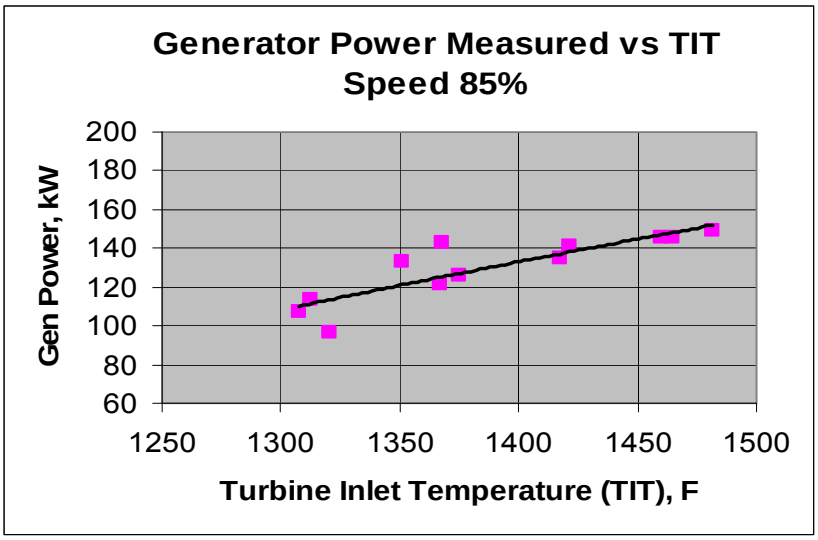

Figure 59. Generator Power Output as a function of turbine inlet temperature.
Source: Gas Technology Institute

Based on experimental data for generator power and flow rate through the expander, the specific generator power was calculated as shown in Figure 60.

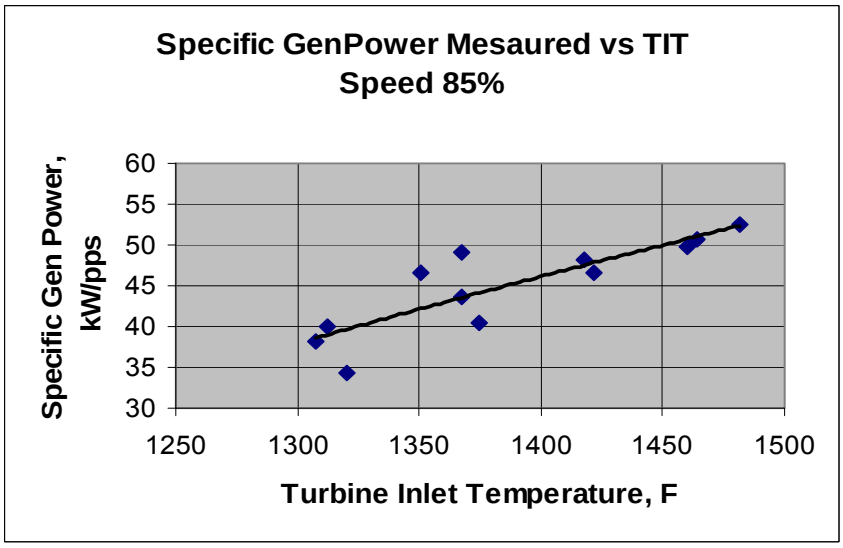

Figure 60. Specific Generator Power as a Function of Turbine Inlet Temperature.

Source: Gas Technology Institute

Similar to a conventional gas turbine, an increase in the POGT turbine inlet temperature leads to additional power output. When turbine inlet temperature is increased by 100 F from 1350 to 1450 F, the Gen Power went up by about 25 kW from 120 kW to 145 kW.

Actual power output calculated from the experimental data for this test series is presented in Figure 61. The parameters were calculated for two speeds, 85% and 100%, and turbine inlet

temperature was extended up to 1650 F, the current turbine inlet temperature for new micro-turbines up to 200 kW capacities.

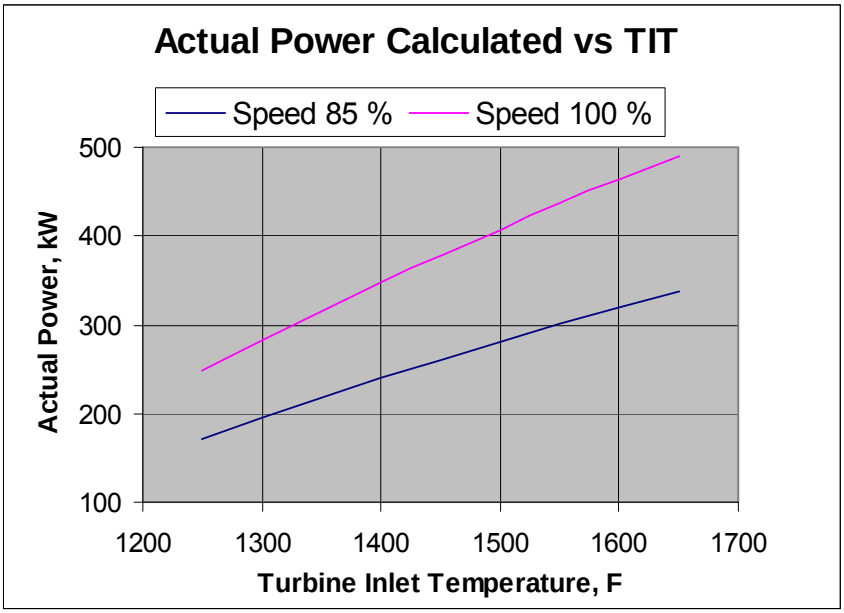

Figure 61. Actual Power Output as a function of TIT

Source: Gas Technology Institute

At full speed and design turbine inlet temperature = 1600F, the actual power output from POGT-converted Spartan is calculated to reach 450 kW, and at advanced turbine inlet temperature =1650 F, the power output is estimated to approach 500 kW.

The specific actual power output was also calculated based on the experimental data from this test series. The results are shown in Figure 62.

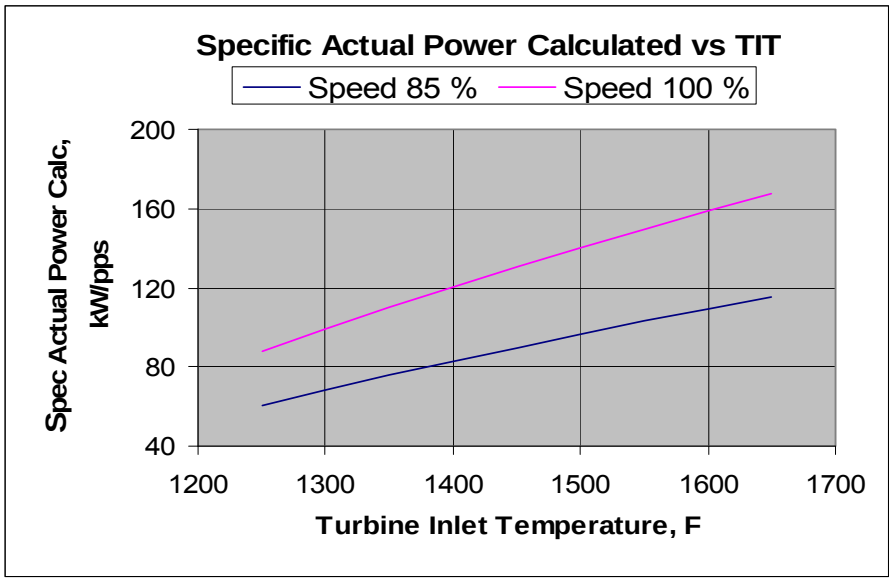

Figure 62. Specific Actual Power Output as a function of turbine inlet temperature.

Source: Gas Technology Institute

The POGT-Spartan has a potential to achieve specific power of 160 kW/pps at turbine inlet temperature =1600F and PR=3.36, while a conventional micro-turbine specific power is about 50 kW/pps at similar turbine inlet temperature and PR.

Effect of Back Pressure on POGT Parameters

There was a dedicated series of tests with back pressure (BP) as a variable. In addition, during the POGT-Boiler testing, the BP was also one of the variables. Referring to the test summary Table 12 column "Variables", the tests where back pressure was varied has a mark "BP." Back pressure was varied in the range 0.8 – 28 in.W.C., while maintaining other variable parameters (speed, TIT, etc.) within narrow ranges. Experimental data were processed and the results are presented in Figures. 63and 64.

When back pressure is applied, the expander PR is reduced and expander work is lower. As shown in Figure. 63, with increasing BP, compressor work is going up, and as a result, the generator power output is decreased. In a properly designed POGT, the reduction of the power output will be much less (about 50% of the values in Figure.63) because the POGT compressor work is a half of the compressor work in the test unit.

Other POGT parameters, turbine inlet temperature and combustion air flow rate, are almost unchanged when BP is increased. This is shown in Figure.64.

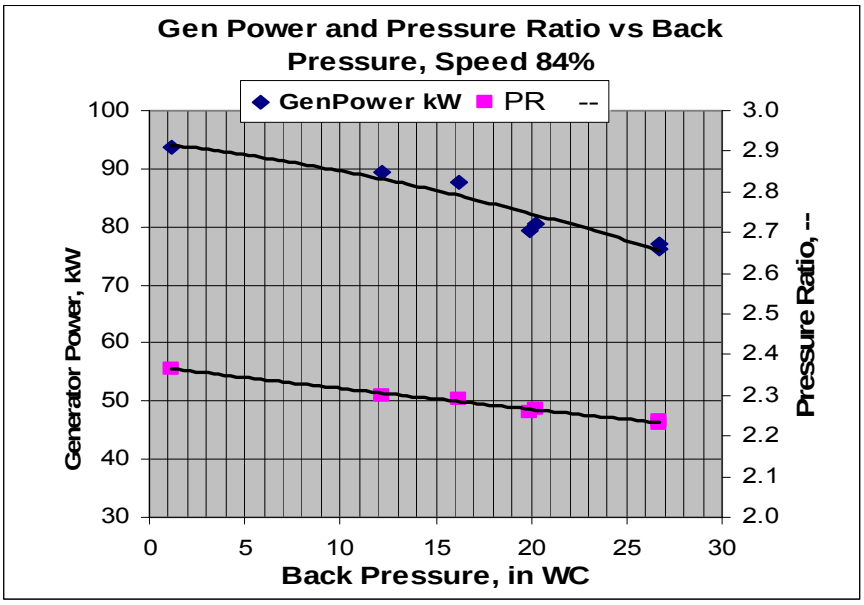

Figure 63. Effect of Back Pressure on Gen Power and Pressure Ratio

Source: Gas Technology Institute

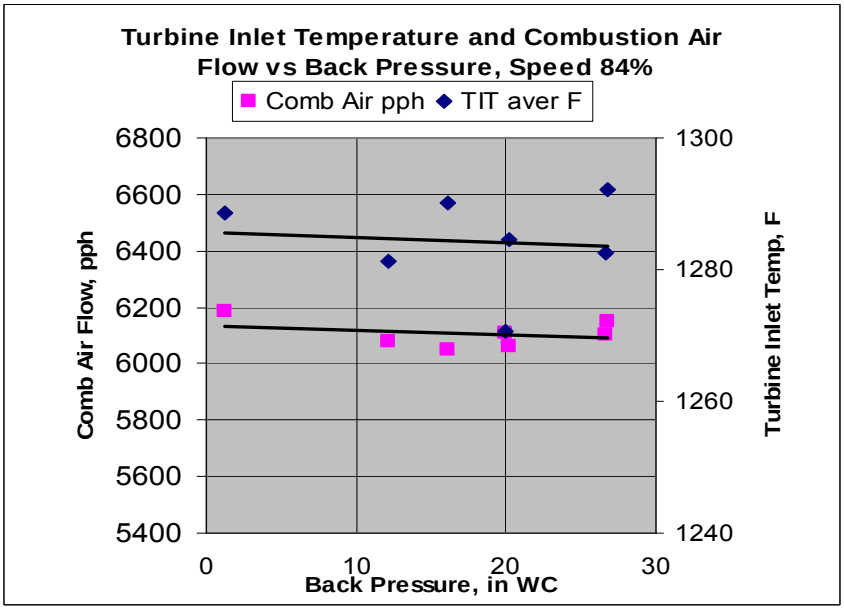

Figure 64. Effect of Back Pressure on turbine inlet temperature and Combustion Air Flow

Source: Gas Technology Institute

In a POGT-based system, where the POGT exhaust is used as a secondary fuel in a boiler, furnace, or fuel cell, as well as feedstock for hydrogen production, the expected back pressure would not exceed 20 in.WC. The test results show that POGT exhaust parameters, (temperature, flow rate, composition) are practically unchanged when the back pressure is less than 20 in.WC.

Effect of Stoichiometric Ratio on POGT Parameters

Stoichiometric ratio (SR) is defined as a ratio of the actual combustion air (oxidant) flow to the theoretically required air (oxidant) flow for complete combustion of the fuel flow. SR is one of the important parameters used in evaluating POGT operation and performance. During all POGT performance testing, SR was varied even if there was another major parameter varied for the given test series. The reason for varying SR in all tests is because POGT startup usually ended when SR reached about 0.7 – 0.8. After the POR temperature stabilized, the SR was gradually reduced to about 0.5-0.6 for the majority of tests. In the test series for SR as a variable, the SR was varied in the range from 0.8 to 0.25 (see Table 12 for POGT testing summary.)

SR affects the composition of POGT syngas as well as the power output. The power output is increased with decreasing the SR. When SR is reduced, the specific heat of the turbine working fluid is increased, and the amount of thermal energy converted to mechanical energy in the expander is also increased. The power output increases proportionally with decreasing SR. Other operating parameters that impact the power output include turbine inlet temperature, pressure ratio, and mass flow. These were analyzed earlier in this chapter. In this project, the focus was on evaluating the effect of SR on the syngas parameters such as high heating value (HHV) and fractions of hydrogen, and carbon monoxide, in the fuel gas.

Syngas compositions were obtained during nine tests using a portable gas chromatograph and gas analyzers. The higher heating value of the dry syngas was calculated for each test. The results are presented in Figure 65 where the HHV of the syngas is plotted against SR. As SR is decreased from 0.7 to 0.25, the syngas HHV is increased about four times, from 40 to 160 Btu/cf.

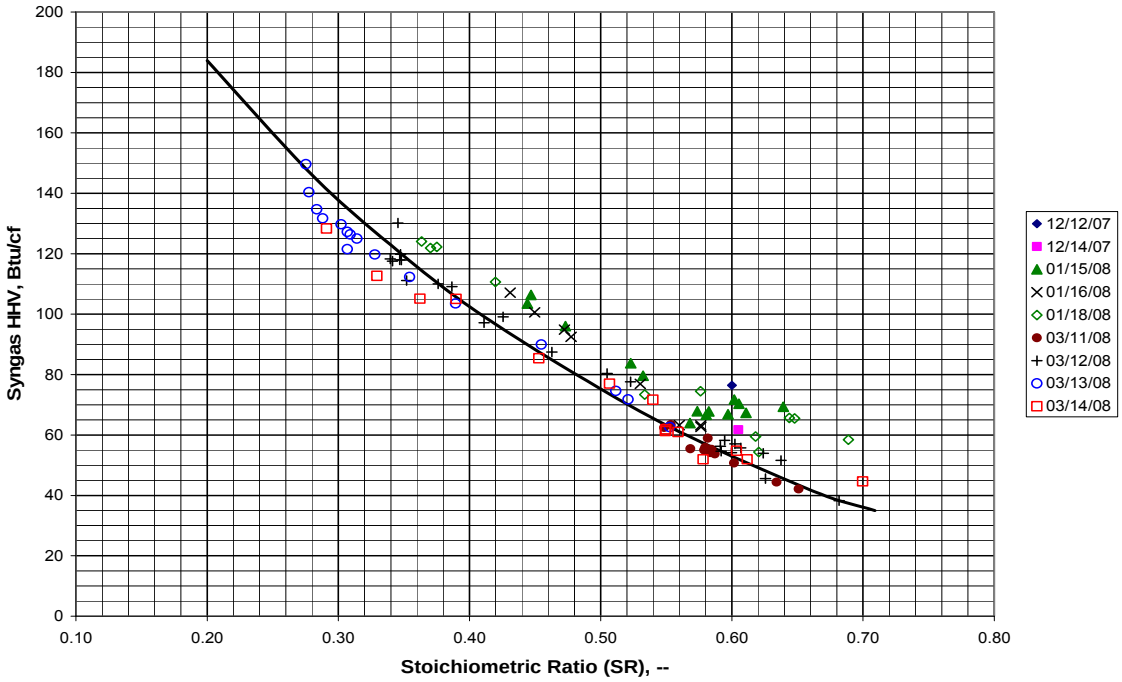

Figure 65. POGT Syngas HHV as a Function of Stoichiometric Ratio

Source: Gas Technology Institute

In the partial oxidation process, syngas heating value depends of the SR and the fuel conversion rate. As explained earlier in this report, the operation of the POGT unit was constrained to limits of turbine inlet temperature (less than 1400F) and flame temperature (less than 2200F). Both of these limits impact the fuel to syngas HHV. Syngas HHV was also affected by dilution from the additional nitrogen injection used to cool the seal plate and for POR exhaust cooling. In a POGT designed for the gas turbines offered today with much higher allowable turbine inlet temperature and flame temperature, the conversion rate can be expected to significantly increase, and syngas HHV should approach at least 250 Btu/cf.

POGT syngas is a valuable product that could be effectively used as a secondary fuel in fuel cells, boilers, furnaces, etc., and as a feedstock for hydrogen production.

As SR was varied, Hydrogen content of the syngas was measured using both portable GC and H_2 analyzers. In Figure 66 below, the processed data are shown. Hydrogen content (volume basis) ramps up from about 6% at SR of 0.7 and syngas HHV about 40 Btu/cf. to 10% at SR of 0.27 and HHV 140 Btu/cf. Aspen-based modeling calculations predict that hydrogen content in POGT syngas could potentially be increased to 20 – 25 % by volume.

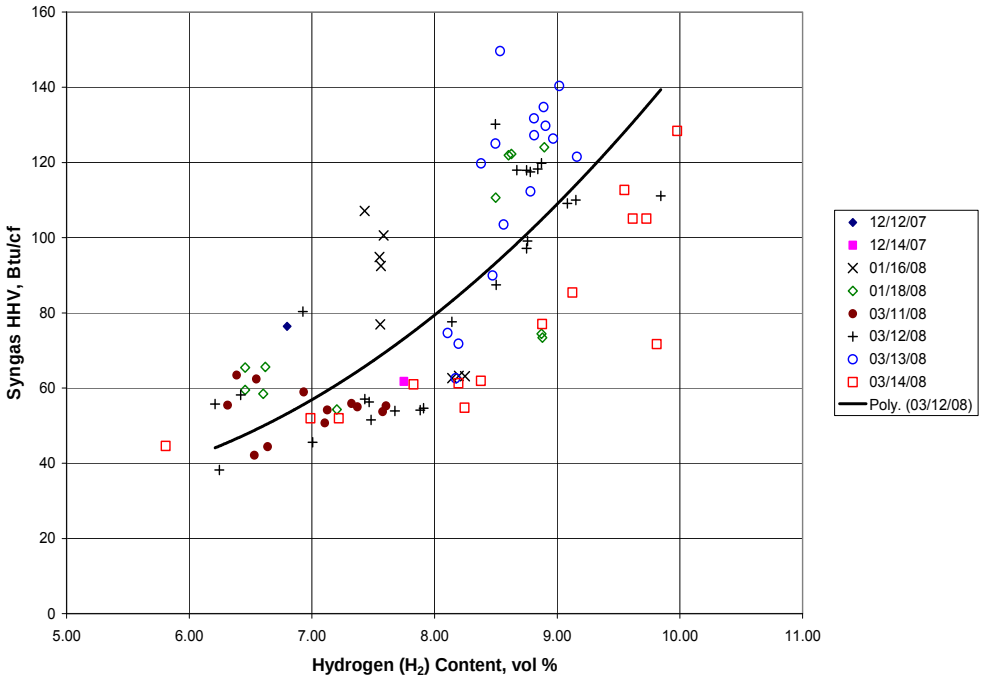

Figure 66. POGT Synthetic gas HHV Correlation with Hydrogen Content

Source: Gas Technology Institute

Carbon monoxide content of the synthetic gas was measured using both portable GC and CO analyzers during the POGT tests varying SR. In Figure 67 below, the processed data are shown. Carbon monoxide content ranges from about 3.5 % at SR of 0.7 and synthetic gas HHV about 40 Btu/cf to 7% at SR of 0.27 and HHV 140 Btu/cf. Aspen based calculation predict that carbon monoxide content in POGT synthetic gas could reach 10–15% by volume.

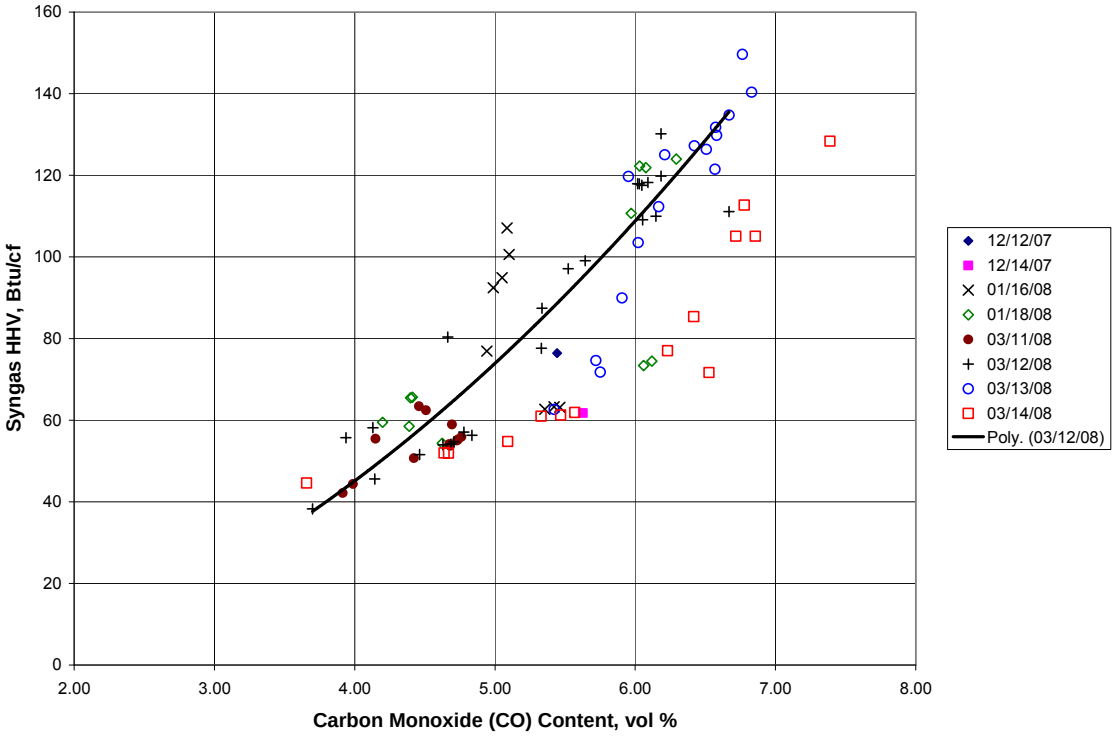

Figure 67. POGT Syngas HHV Correlation with Carbon Monoxide Content

Source: Gas Technology Institute

2.2.5. POGT Unit Specification Development

POGT Implementation -Elliot TA100 Micro turbine

INTRODUCTION

This section reports on candidate approaches for implementing the proposed POGT concept using a commercial microturbine. This work was performed under contract to GTI by Brayton Energy, using its proprietary analysis tools for performance modeling of gas-turbine engines.

The microturbine chosen for this study is the Elliot TA100. This selection is meant to be representative, with the findings reported below applying at least qualitatively to alternative engine choices of comparable single-shaft configuration. Apart from its wide availability, desirable attributes of the TA100 for the proposed application are its variable-speed capability, and its adoption of single-stage radial turbo machinery components.

Detailed specifications for the TA100 were not available for this study, which relied on published performance parameters and on further information provided by Elliot staff. Where needed, details were filled in on a rough basis under the model 'fitting' strategy outlined below. Input values for this study appear in Table 1, corresponding to rated design conditions for the "CHP" configuration incorporating waste-heat recovery.

Table 12. Performance parameters for Elliot TA100 at rated design conditions. Values correspond to rated design conditions for CHP configuration.

Output power (AC to grid)	100kWe	Published
Output efficiency (LHV net electrical)	29%	Published
Compressor flow	0.88kg/s	Estimated by Elliot staff
Compressor pressure ratio	4:1	
Compressor efficiency	76%	
Turbine-inlet temperature	1172K	

For purposes of this study, it was necessary to estimate design performance parameters for the TA100's radial-inflow turbine, specifically its flow capacity, expansion ratio, efficiency, and rotational speed. Also sought were estimated turbo machinery diameters, in particular for the compressor as a basis for scaling studies. These values were established by means of a model fit based on the parameters listed in Table 1, with representative microturbine-class figures assigned to parameters not specifically available. To be emphasized is that the specific parameter choices, e.g. the partitioning of losses among mechanical, throttling, and turbo machinery performance, are of secondary importance in the present study. Findings are summarized in Figure 68

cycle		
TIT (K)	1172	
massflow (kg/s)	0.880	
power (kWs)	110.9	
effy (LHV shaft)	32.1%	
power (kWe)	100.1	
effy (LHV elec)	29.0%	(net AC)

turbomachinery	effy	PR	N(rpm)	Dia(mm)
comp	76.0%	4.00	67907	146
turbine	84.8%	3.54	"	167

state points	p(kPa)	T(K)
0	101.33	288.2
1	100.82	288.2
3	403.27	471.1
4	393.19	857.3
6	379.43	1172.0
7	107.04	905.5
8	105.33	534.9
9	101.33	534.9

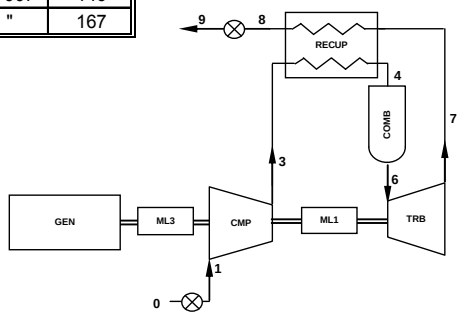

recuperator	
eff	88.9%
T_{C1} (K)	471.1
T_{H1} (K)	905.5
$\Delta p/p_C$	2.5%
$\Delta p/p_H$	3.8%

inlet/exhaust losses		
inlet	0.5%	
exhaust	1.6%	(with heat recovery)

mechanical losses		
ML1	0.8%	
ML3	1.8%	
gen effy	90.3%	(shaft-to-AC)

combustor	
T1 (K)	857.3
p1(kPa)	393.2
$\Delta p/p$	3.5%
$\eta_{thermal}$	98%
Tfuel (K)	299.8

Figure 68. TA100 design-point performance summary based on model fit to parameters of Table 12. A key objective of the modeling study was to estimate operating parameters for the radial-inflow turbine.

Source: Gas Technology Institute

For application of the TA100 to the special requirements of the POGT system, a priority from a cost standpoint was to capitalize on existing turbo machinery hardware. Evaluation of such strategies calls for 'off-design' analysis, which relates broadly to operation of fixed hardware over a range of operating conditions. Off-design characterization of turbo machinery behavior relies on performance maps, which for the specific components of the TA100 are not available in published literature. For the approximate purposes of this study, compressor and turbine maps were developed on a rough normalized basis using Brayton Energy software and scaled to reflect design-point performance parameters corresponding to the TA100.

The gas composition on the turbine side, air plus dilute combustion products in the usual gas-turbine setting, departs substantially in the case of the POGT. This called for some adaptation of Brayton Energy's usual approach to turbine modeling, namely:

Thermodynamic properties were evaluated for each constituent as a function of temperature based on polynomial fits[51], and for the prescribed composition following the standard rules for ideal-gas mixtures.

The usual turbine flow parameter $mT^{1/2}/p$, customarily applied as a surrogate for flow Mach number, needed modification. This is because gas properties vary widely over the course of the

[51] McBride, B.J., M.J. Zehe, and S. Gordon, NASA Glenn Coefficients for Calculating Thermodynamic Properties of Individual Species, NASA TP-2002-211556, September 2002.

present study, e.g. when comparing relative performance for an air-breathing turbine against the gas composition prescribed for the POGT. Recasting of the turbine map in terms of the modified flow parameter $(mT^{1/2}/p)/(\gamma MW)^{1/2}$ satisfactorily accounts for variations in specific-heat ratio ($\gamma = c_p/c_v$) and molecular weight (MW).

The usual turbine corrected speed $N/T^{1/2}$, customarily applied as a surrogate for blade Mach number, must be redefined based on the reasoning above. Property variations are reflected by recasting the turbine map in terms of the modified corrected-speed parameter $(N/T^{1/2})(MW/\gamma)^{1/2}$.

PROBLEM OVERVIEW AND GROUND RULES FOR STUDY

In adapting a conventional air-breathing microturbine to the POGT application, the fundamental challenge is that posed by the increase in turbine flow with no corresponding change on the compressor side. Whereas the ratio of turbine-to-compressor mass flow is near 1:1 in the conventional setting, this value equals 1.59 for the POGT. The corresponding ratio on a molar basis equals 2.28, the increase stemming from the lower molecular weight of the hydrogen-rich POGT gas stream.

Without hardware modification the turbine-to-compressor flow imbalance cannot be accommodated. Two hypothetical scenarios may be considered:

- Making use of the TA100 turbine operating in the vicinity of its design flow and expansion ratio, the flow reduction demanded on the compressor side would dramatically exceed surge limits. For a centrifugal compressor typical of that found in the TA100, surge would be experienced at roughly a 10 to 15% flow reduction from design, a fraction of the requirement.
- Making use of the TA100 compressor operating at its design flow and pressure ratio, the flow increase on the turbine side would demand a full redesign of the turbine stage. More significantly from a cost standpoint, the gain in power would overwhelm the TA100's alternator and power-conditioning capacity. In fact, because an alternator capable of absorbing the power increase could not be designed to run at the original speed, a full redesign of both turbo machinery stages would be required.
- Of course, a fully-customized gas-turbine solution could be developed reflecting the demands above, but that is not the objective of this study. The focus here is to minimize development costs by capitalizing, to the extent possible, on the existing hardware of the TA100. Within that context, ground rules for the current study are established as follows:
- Output power cannot exceed 100kWe. This preserves the existing alternator, power-conditioning module, and output mechanical configuration.
- Design changes on the hot (turbine) side of the engine are more involved than on the cold (compressor) side, making the latter preferable from a cost standpoint. In fact, the solution advocated below makes no modifications to the TA100 turbine, with redesign limited to the compressor.

- Turbo machinery tip speeds, and hence stress levels, cannot exceed current design values. Because the TA100 turbine rotor is unmodified as stated above, and because the diameter of the redesigned compressor wheel will be found not to exceed that of its predecessor (see below), this dictates a maximum rotational speed equal to that of the TA100.

OVERVIEW OF CANDIDATE STRATEGIES

Within the framework of the ground rules above, the strategies outlined below were investigated under this study. The qualitative discussion here is supported by numerical findings in the following section of this report.

Compressor Bleed

Under this approach, a substantial fraction of compressor-discharge flow is bled overboard upstream of the POR vessel, thereby meeting the requirement for above for turbine-to-compressor flow ratio with no turbo machinery design changes. This is the strategy currently followed in IGT's current test rig using the Spartan 200 kW gas turbine.

Although a bleed fraction of roughly one-half is consistent with operation at the TA100 design pressure ratio, additional bleed is needed to respect the 100 kW power limit above. The corresponding increase in flow causes compressor operations to depart slightly from design conditions, with the small penalty in compressor efficiency quantified in the next section.

Not surprisingly in view of the wasted compressor work, this is the least efficient of the strategies to be investigated here. A further, though small, performance compromise is also seen on the turbine side, qualitatively explainable in terms of insufficient tip speed in relation to expansion ratio. In the next section, this decrement is quantified in terms of a efficiency correlation for radial-inflow turbines based on the "jet-speed" ratio u/c_0. Here u is the tip speed and $c0$ is the so-called *isentropic spouting velocity*, roughly a specific-work parameter coupled to expansion ratio. A value of u/c_0 equal to 0.69 is considered optimum for radial-inflow turbines, this choice having been assumed in arriving at a rough design specification for the TA100 turbine.

Although turbine efficiency could in principle be raised with an increase in rotational speed, this is prohibited under the rules of this study listed above. A seeming alternative would to reduce turbine expansion ratio (proportional to compressor pressure ratio) in relation to speed, but the fixed relationship between compressor pressure ratio and speed negates this strategy.

Compressor Redesign at Fixed Impeller Diameter

Under this approach the flow capacity of the compressor is reduced roughly by half at prescribed pressure ratio, with this pressure ratio achieved at roughly the same speed as for the original TA100 impeller. This reduction in flow capacity enables the requirement for turbine-to-compressor flow ratio to be met while maintaining surge margin comparable to that of the original TA100 compressor stage.

The preserved relationship between speed and pressure ratio is a consequence of holding the original value of impeller tip diameter, and hence tip speed (u). It also follows from the rough consistency of head coefficient ($\Delta h/u^2$) between the two designs, where Δh is the specific enthalpy rise imparted by the impeller. As above, it carries negative consequences for turbine performance in terms of insufficient tip speed in relation to expansion ratio.

This strategy carries a significant performance penalty in the form of reduced compressor *specific speed*, a non-dimensional parameter relating speed (N), inlet volumetric flow (Q), and enthalpy rise (Δh) in the form $NQ^{1/2}/\Delta h$. The specific-speed parameter roughly governs the peak efficiency potential for a well-designed centrifugal stage, with a value of around 0.8 an optimum specification. The specific-speed penalty is quantified in the next section of this report.

At the original TA100 design speed and corresponding design pressure ratio, this strategy would produce power far in excess of the 100 kW limit. In the absence of bleed, the only power-reducing strategy is to reduce pressure ratio through a reduction in rotational speed. Among the candidate strategies, this is the only one exploiting the variable-speed capability of the TA100.

Prescribing the impeller tip diameter equal to that of the TA100 allows for cost savings, most significantly the opportunity to make use of the original compressor housing. This does presume that enough material is present in the original housing to enable matching to the redesigned impeller, for which the blade passage will be narrower. A further attraction of holding impeller diameter is that mass properties of the impeller are roughly preserved, permitting use of the original bearing configuration.

A simple variant of this strategy would be a "flow trim" of the existing TA100 impeller, wherein the blade height is reduced roughly by a constant fraction over the flow passage. This technique is commonplace in the turbocharger world for fabricating impeller families from the same raw casting, but covering a wide range in flow. Because of the relatively large flow excursion demanded by the current application, the flow-trim strategy would impose a significant penalty in compressor efficiency, but might be contemplated for test purposes.

Compressor Redesign at Reduced Impeller Diameter

This is the most efficient strategy, and for this reason is advocated for the eventual design. It does pose the greatest mechanical challenge because the reduction in impeller diameter will no longer permit use of the original compressor housing, and the change in impeller mass characteristics could have implications for bearing design.

As in the former approach, compressor flow capacity is reduced in order to restore bring surge margin to original levels while meeting the requirement for turbine-to-compressor flow ratio. Unlike the case above, however, this is accomplished with an increase in rotational speed at corresponding pressure ratio. Best performance is achieved by restoring speed to its original design level, the maximum permissible under the rules of this study.

Increased speed carries performance benefits on both compressor and turbine sides. For the compressor, it raises the specific-speed parameter (see above) closer to the optimum level, with a corresponding boost in efficiency. For the turbine, the u/c_0 parameter is brought higher, nearly to the value of 0.69 identified above as a rough efficiency optimum for radial-inflow designs.

As above, power is held at the 100 kW level through a reduction in pressure ratio. Because this approach is the most efficient, roughly translating to increased power at a prescribed pressure ratio, it carries the lowest design pressure ratio among the strategies investigated.

MODEL ANALYSIS OF CANDIDATE STRATEGIES

Quantitative performance projections are developed in this section for each of the candidate strategies, using a combination of design and off-design modeling techniques outlined above.

The approximate strategy adopted for turbo machinery performance projection is summarized as follows:

- Compressor and turbine maps were generated using Brayton Energy software, their normalized shape corresponding roughly to turbo machinery having the appropriate non-dimensional characteristics. Map adaptation to the gas properties of this study was described earlier.
- Compressor design-point efficiency was correlated against specific speed (defined earlier), in a normalized sense using the TA100 compressor as a baseline. The correlation chosen, widely recognized as an industry standard for centrifugal compressors, appears in Figure 1. This correlative strategy establishes efficiency at selected design conditions, with efficiency at off-design excursions governed by the compressor map.
- The compressor efficiency correlated in Figure 69 is the so-called *polytropic* value, relating to stage aerodynamic performance irrespective of pressure ratio. The *isentropic* efficiency needed in thermodynamic studies can be calculated directly from polytropic efficiency and pressure ratio. As a baseline for this study, the design-point polytropic efficiency of the TA100 compressor was evaluated based on the isentropic value appearing in Table 12.
- Polytropic efficiencies for redesigned compressor stages considered in this study were evaluated from the correlation of Figure 69, based on departures in design-point specific speed from the TA100 baseline. Isentropic efficiency, as a basis for performance calculations, was then evaluated based on design-point pressure ratio for the redesigned stage.
- Turbine efficiency normalized by the TA100 baseline, was evaluated in this study on an off-design basis in this study because of reliance on fixed turbine hardware, and was correlated against the u/c_0 parameter described earlier. The efficiency correlation (not

shown) was derived from a widely-used source[52] for performance prediction of radial-inflow turbines.

[52] Rohik, H.E., Analytical Determination of Radial-Inflow Turbine Design Geometry for Maximum Efficiency, NASA TN D-4384 (1968).

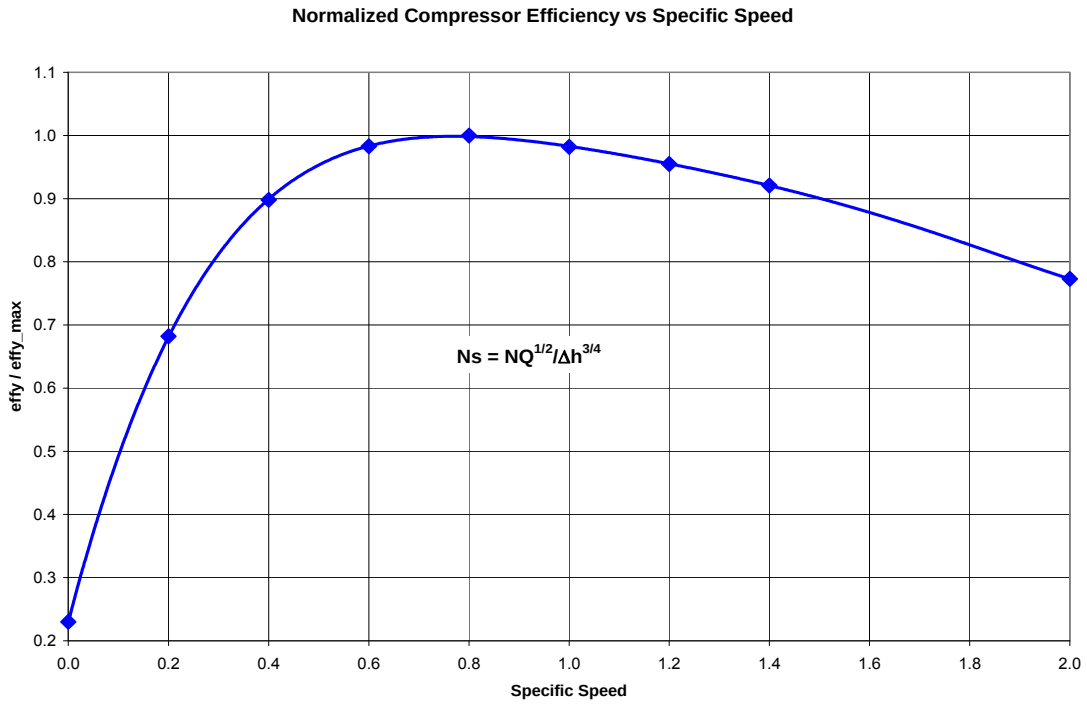

Figure 69. Correlation of compressor design-point efficiency against specific speed, roughly defining the efficiency potential for a well-designed centrifugal stage. As described in the text, compressor polytropic efficiency is the correlated parameter because it relates directly to aerodynamic performance independent of design pressure ratio.

Source: Gas Technology Institute

An efficiency metric was needed for ranking the relative performance of the candidate strategies. The choice made in this study was to rank performance in terms of a specific-work parameter, i.e. power per unit mass flow (or equivalently as energy per unit mass). The numerator for this parameter is the 100 kW output prescribed as a fixed value for each case in this study. The denominator was taken as the added mass flow (fuel and steam) added in the POR.

It is recognized that this choice of efficiency metric is an imperfect one, because it does not directly reflect the energetics of the POR, for which fuel requirements will depend to some degree on compressor and turbine discharge temperatures. Because the POR was not modeled explicitly under the Brayton Energy study, it was not possible to implement this level of refinement. Fortunately, the turbomachinery discharge temperatures (reported below) do not vary widely over the course of this study.

Findings of the performance-ranking study are summarized in Table 13, with the efficiency metric appearing in the top row. As stated, the compressor-redesign strategy with reduced impeller diameter is the preferred choice, with a 43% efficiency gain seen compared to the 'baseline' bleed strategy. Compressor redesign at fixed impeller diameter may also be considered a worthy candidate, for which the corresponding gain is 31% over baseline.

Further details noted from Table 13 include the turbine-inlet temperature of 1177 K, slightly higher than the estimated TA100 design value. The higher figure was supplied by GTI based on an energy balance for the POR. As noted above, this value should properly have been allowed to vary with compressor-discharge temperature and POR gas composition. As a final note, the POR pressure loss of 10.3%, taken from compressor discharge to turbine inlet, was applied as a fixed value throughout this study.

Selected details for the off-design modeling strategy appear in Figures 70 and 71, showing estimated compressor maps for the TA100 stage used in connection with the bleed strategy, and scaled maps corresponding to the compressor redesign strategies evaluated here. Annotations appearing on the figures correspond to the discussion of the previous section of this report.

Table 13. Performance summary for candidate POGT strategies.

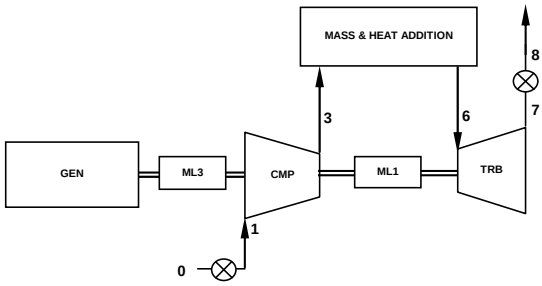

	Elliot TA100 (design pt baseline)	Comp Bleed	Comp Redesign (same diameter)	Comp Redesign (smaller diameter)
POGT Effy Parameter (kJ/kg)	-	407.2	535.2	584.0
Output Power (kWe)	100.0	100.0	100.0	100.0
Speed (rpm)	67907	67907	54563	67907
POR Vessel $\Delta p/p$	-	10.2%		
Compressor				
bleed fraction	0%	54.0%	0%	0%
massflow (kg/s)	0.880	0.905	0.317	0.290
pressure ratio	4.00	3.78	2.90	2.72
specific speed	0.83	0.88	0.51	0.64
efficiency (isentropic)	76.0%	75.8%	73.2%	76.5%
inlet temp (K)	288	288	288	288
discharge temp (K)	471	462	427	412
diameter (mm)	146	146	146	121
Turbine				
massflow (kg/s)	0.887	0.662	0.504	0.461
expansion ratio	3.54	3.32	2.55	2.39
specific speed	0.700	0.591	0.502	0.626
inlet temp (K)	1172	1177	1177	1177
discharge temp (K)	906	949	1005	999
u/c_0	0.690	0.587	0.527	0.676
efficiency (isentropic)	84.8%	81.2%	76.9%	84.7%
diameter (mm)	167	167	167	167
Turbine Gas Composition				
x_{N2} (mole fraction)	air + comb products	34.2%		
x_{O2}		0.0%		
x_{AR}		0.4%		
x_{CO2}		6.2%		
x_{H2O}		31.9%		
x_{CO}		5.4%		
x_{H2}		21.9%		
MW	28.67	20.17		
$\gamma = c_p/c_v$ (inlet)	1.329	1.284		

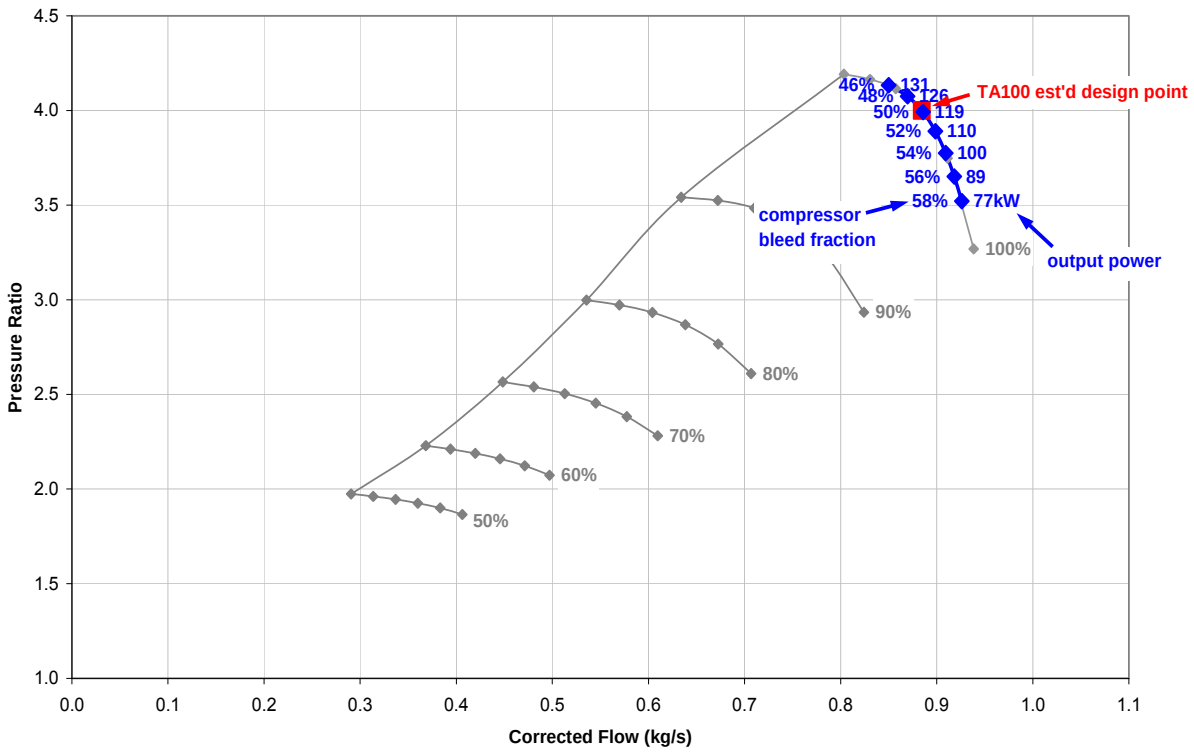

Figure 70 Approximate representation of TA100 compressor map showing effect of bleed fraction on engine power and compressor operating point. Lines are for constant speed normalized by design value. Bleed operation carried out at fixed design speed.

Source: Gas Technology Institute

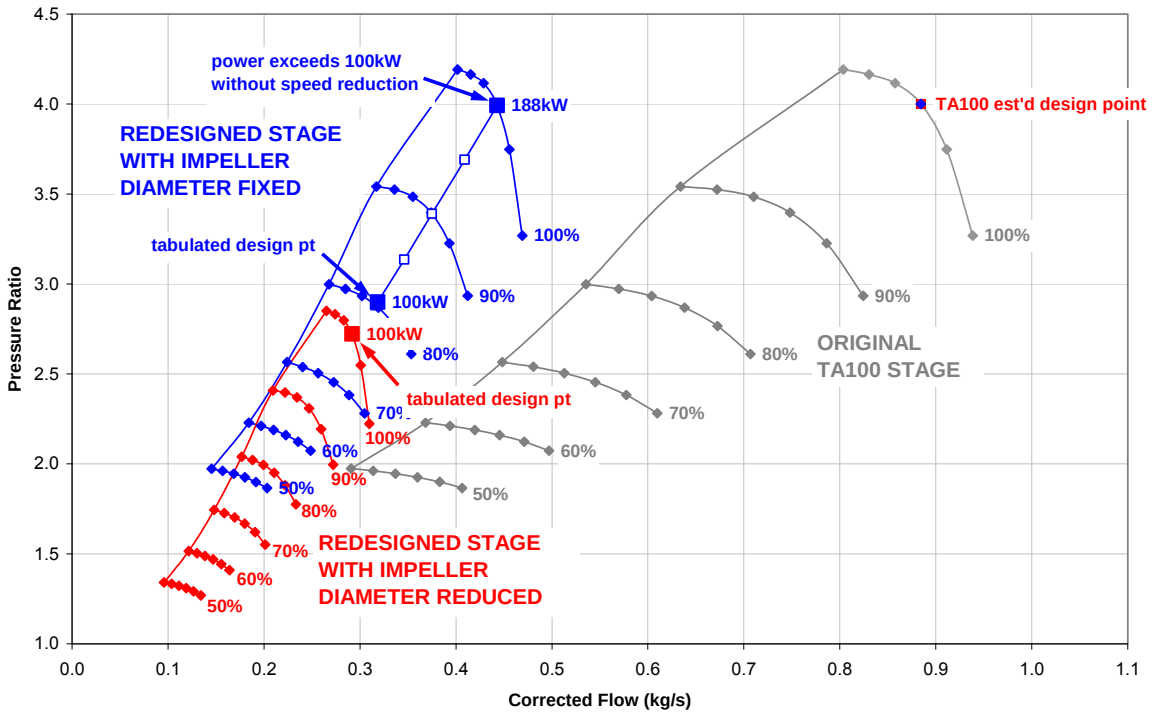

Figure 71. Original (unscaled) compressor map, and map representations for two redesign concepts described in text. For redesign at fixed impeller diameter, speed must be reduced below design level to hold power at 100kW limit. With diameter reduction, speed can be returned to the 100% design level

Source: Gas Technology Institute

CONCEPTUAL STUDY OF MICROTURBINE INTEGRATION

A preliminary study was carried out to explore POGT integration concepts using the Elliot TA100 microturbine. Because engineering drawings of the TA100 were not available, this study was based on approximate representations adapted from images appearing in Elliot promotional literature. It was attempted to capture relative scaling major microturbine subassemblies and to represent the approximate scale for the POGT corresponding to the flow parameters developed under the current study.

The important modifications contemplated for the TA100, as represented conceptually in Figures 72 and 73, are summarized as follows:

The compressor is redesigned along the guidelines of this study, with reduced impeller diameter and correspondingly resized housing.

The recuperator and combustor are removed.

POR discharge is introduced directly to the turbine through an insulated port in the casing. Although turbine aerodynamic modifications are not called for under the current study, it is unlikely that the existing turbine casing can be preserved in view of the tight integration strategy for the TA100.

On this last point above, the TA100 may not be the preferred choice for POGT integration. Under the more conventional design strategy where compressor and turbine casings are fully separated, it should be possible to salvage the existing turbine housing.

Figures 72 and 73. POGT system integration conceptual drawings (based loosely upon the Elliot TA100 micro turbine).

Source: Gas Technology Institute

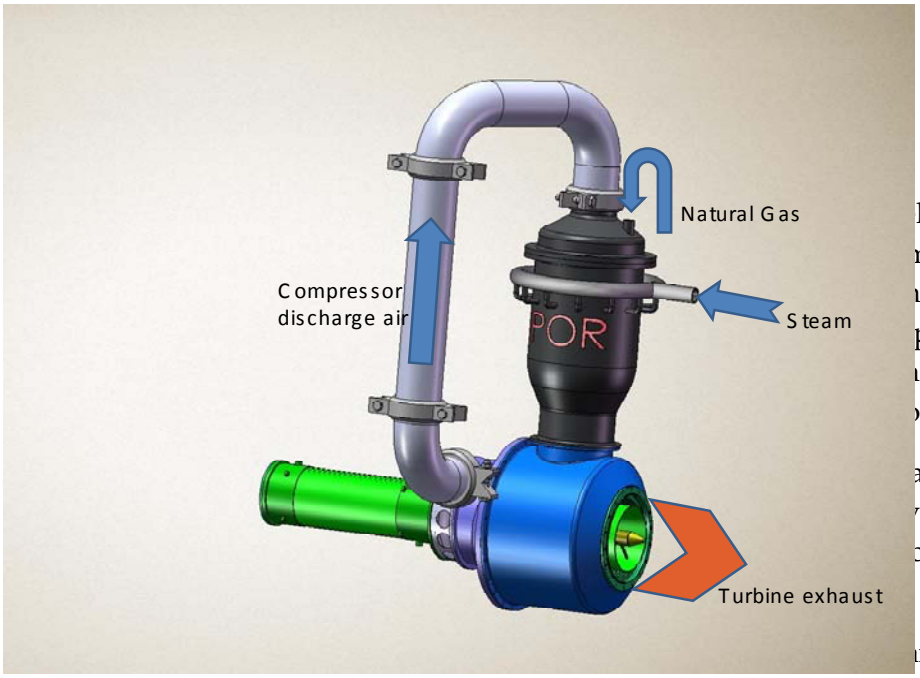

loped for the POR,
nodels were used for
e next steps of system
putational Fluid
g results are discussed in
finalize the POR design.

and syngas) boiler-burner
valuation of flame
cussed in subchapter

nd POGT-Boiler system
are discussed.

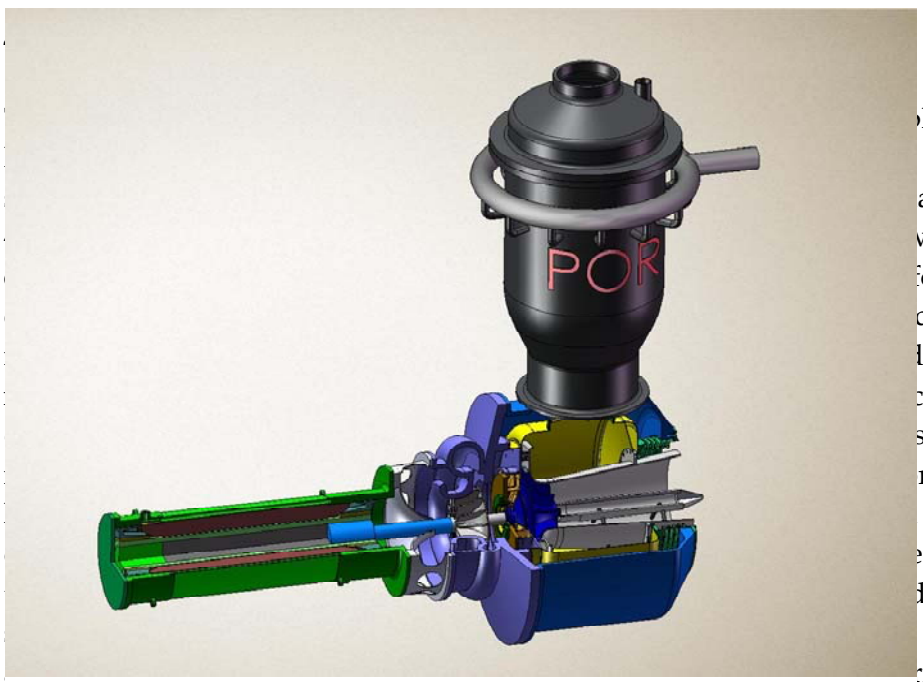

lemented in three steps.
gas turbines. The
ar turbines, the Centaur
vere generated for these
for each engine, and
d comment. After several
l be used in the POGT
c flow through expander,
stant in the POGT
r converted TA100, C40,
Solar, and, after iterative
ed in the model setup. At
l complete. In the third
evaluated for potential
ricity and hydrogen,
combined heat and power generation, etc.

Several versions of the TA100 converted to POGT were evaluated. The results of Aspen calculations for one of the versions are presented below. The schematic of the POGT-Boiler system for combined power and steam production is shown in Figure 1. The POGT-TA100 utilizes the existing compressor and expander from the conventional TA100. As discussed in previous chapter, POGT uses only about 50% of air flow compared to a conventional engine.

Therefore in the system below, one existing compressor is capable of serving two PORs and two expanders working in parallel. POGT exhaust from the two expanders is utilized for steam generation and superheating as well as for natural gas preheating. This version of the POGT-Boiler system was implemented in the Aspen-Plus program.
In the Figure 74, an Aspen-Plus schematic for the POGT-Boiler system is shown.

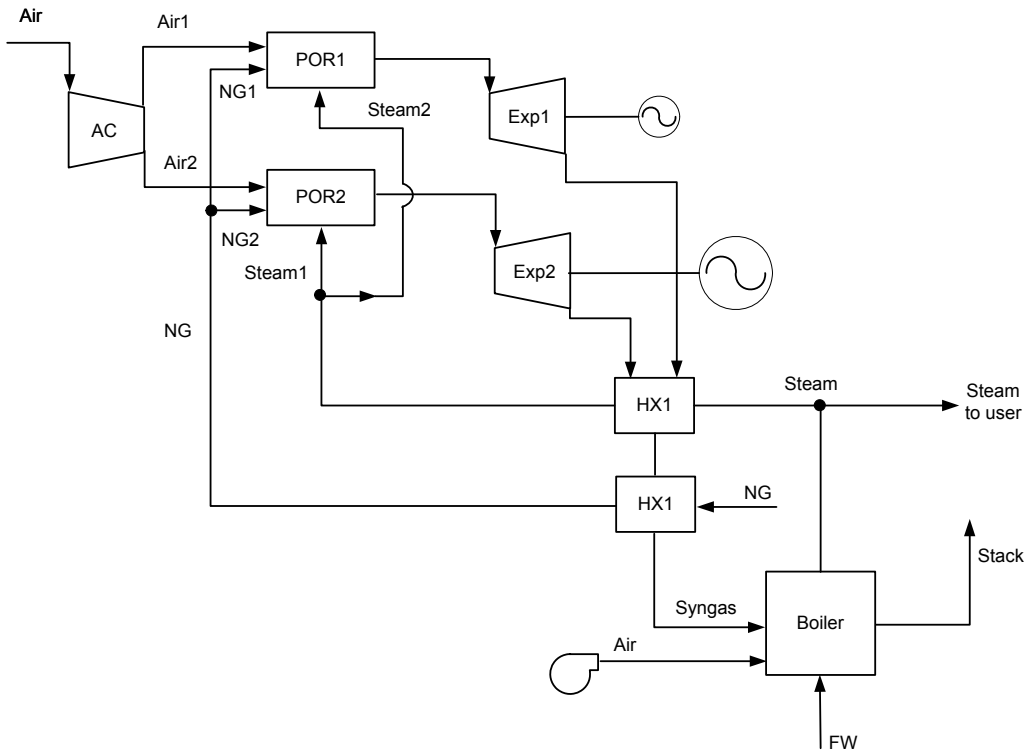

Figure 74 Aspen-Plus Schematic for POGT-Boiler System
Source: Gas Technology Institute

The system was run in Aspen and the calculation results are summarized in Tables 14 and 15. For each stream in Figure 74, all parameters including composition and components mass flow are shown below:

	AIR	AIR-BOIL	AIR1	AIR2	AIRTOPOR	NAT-GAS	NG1	NG2	SEC-FUEL	SH-STEAM	ST-POR1	ST-POR2
Temperature F	59	59	363.9068	363.9068	363.9068	59	830	830	1003.904	500	478.817	478.817
Pressure psi	14.62	14.7	58.1	58.1	58.1	62	62	62	14.9	200	58	58
Total Flow lb/hr	6400	12000	3200	3200	6400	960	480	480	10160	15000	1400	1400
Total Flow cuft/hr	84396.32	1.57E+05	16890.52	16890.52	33781.03	4926.872	6202.949	6202.949	5.30E+05	40961.38	13311.53	13311.53
Density lb/cuft	0.0758327	0.076248	0.1894554	0.1894554	0.1894554	0.1948498	0.0773825	0.0773825	0.0191565	0.3661986	0.105172	0.105172
CPMX Btu/lb-R	0.2416779	0.241681	0.2461939	0.2461939	0.2461939	0.5093666	0.8494916	0.8494916	0.4101393	0.4968655	0.4771176	0.4771176
HHV Btu/lb	6.621314	6.621314	6.621314	6.621314	6.621314	22829.08	22829.08	22829.08	1952.173	1049.984	1049.984	1049.984
Mole Frac												
H2O	0.0101	0.0101	0.0101	0.0101	0.0101	0	0	0	0.3193253	1	1	1
N2	0.773	0.773	0.773	0.773	0.773	0.0151	0.0151	0.0151	0.3424807	0	0	0
O2	0.2074	0.2074	0.2074	0.2074	0.2074	0	0	0	0	0	0	0
H2	0	0	0	0	0	0	0	0	0.2178808	0	0	0
CO	0	0	0	0	0	0	0	0	0.0542954	0	0	0
CO2	3.00E-04	3.00E-04	3.00E-04	3.00E-04	3.00E-04	4.40E-03	4.40E-03	4.40E-03	0.061947	0	0	0
CH4	0	0	0	0	0	0.927899	0.927899	0.927899	1.44E-05	0	0	0
C2H6	0	0	0	0	0	0.0416	0.0416	0.0416	6.56E-13	0	0	0
C3H8	0	0	0	0	0	8.40E-03	8.40E-03	8.40E-03	1.02E-19	0	0	0
C4H10	0	0	0	0	0	1.80E-03	1.80E-03	1.80E-03	1.57E-26	0	0	0
C2H2	0	0	0	0	0	0	0	0	2.99E-13	0	0	0
AR	9.20E-03	9.20E-03	9.20E-03	9.20E-03	9.20E-03	0	0	0	4.06E-03	0	0	0
N-PEN-01	0	0	0	0	0	4.00E-04	4.00E-04	4.00E-04	0	0	0	0
N-HEX-01	0	0	0	0	0	4.00E-04	4.00E-04	4.00E-04	0	0	0	0
Mass Flow lb/hr												
H2O	40.35911	75.67334	20.17956	20.17956	40.35911	0	0	0	2894.111	15000	1400	1400
N2	4803.146	9005.898	2401.573	2401.573	4803.146	23.48389	11.74194	11.74194	4826.63	0	0	0
O2	1472.047	2760.088	736.0235	736.0235	1472.047	0	0	0	0	0	0	0
H2	0	0	0	0	0	0	0	0	220.9654	0	0	0
CO	0	0	0	0	0	0	0	0	765.1093	0	0	0
CO2	2.928531	5.490996	1.464266	1.464266	2.928531	10.75048	5.375242	5.375242	1371.547	0	0	0
CH4	0	0	0	0	0	826.4294	413.2147	413.2147	0.1162932	0	0	0
C2H6	0	0	0	0	0	69.44604	34.72302	34.72302	9.93E-09	0	0	0
C3H8	0	0	0	0	0	20.56409	10.28205	10.28205	2.27E-15	0	0	0
C4H10	0	0	0	0	0	5.808306	2.904153	2.904153	4.60E-22	0	0	0
C2H2	0	0	0	0	0	0	0	0	3.91E-09	0	0	0
AR	81.51961	152.8493	40.7598	40.7598	81.51961	0	0	0	81.51961	0	0	0
N-PEN-01	0	0	0	0	0	1.602227	0.8011133	0.8011133	0	0	0	0
N-HEX-01	0	0	0	0	0	1.913719	0.9568594	0.9568594	0	0	0	0

Table 14. Aspen Calculations for POGT-Boiler Stream Parameters

Source: Gas Technology Institute

Table 15, Aspen Calculations for POGT-Boiler Stream Parameters

Source: Gas Technology Institute

	STD-STM	STEAM	STM	STM-POR	STMTOPOR	TO-BOIL	TO-BOILE	TO-POR	TO1EXPAN	TO2EXPAN	TUR1-OUT	TUR2-OUT
Temperature F	381.7135	500	77	500	478.817	77.22333	883.1792	830	1659.317	1659.317	1212.689	1212.689
Pressure psi	200	200	14.7	200	58	200	14.9	62	52.2	52.2	14.9	14.9
Total Flow lb/hr	15000	12200	12200	2800	2800	15000	10160	960	5080	5080	5080	5080
Total Flow cuft/hr	35080.12	33315.3	230.2777	7646.124	26623.06	283.1074	4.87E+05	12405.9	1.10E+05	1.10E+05	3.03E+05	3.03E+05
Density lb/cuft	0.427593	0.3662	52.97951	0.3661986	0.105172	52.98342	0.0208795	0.0773825	0.0463313	0.0463313	0.0167642	0.0167642
CPMX Btu/lb-R	0.498435	0.49687		0.4968655	0.4771176		0.4036572	0.8494916	0.4443606	0.4443606	0.4214105	0.4214105
HHV Btu/lb	1049.984	1049.98	1049.984	1049.984	1049.984	1049.984	1952.173	22829.08	1952.173	1952.173	1952.173	1952.173
Mole Frac												
H2O	1	1	1	1	1	1	0.3193253	0	0.3193253	0.3193253	0.3193253	0.3193253
N2	0	0	0	0	0	0	0.3424807	0.0151	0.3424807	0.3424807	0.3424807	0.3424807
O2	0	0	0	0	0	0	0	0	0	0	0	0
H2	0	0	0	0	0	0	0.2178808	0	0.2178808	0.2178808	0.2178808	0.2178808
CO	0	0	0	0	0	0	0.0542954	0	0.0542954	0.0542954	0.0542954	0.0542954
CO2	0	0	0	0	0	0	0.061947	4.40E-03	0.061947	0.061947	0.061947	0.061947
CH4	0	0	0	0	0	0	1.44E-05	0.927899	1.44E-05	1.44E-05	1.44E-05	1.44E-05
C2H6	0	0	0	0	0	0	6.56E-13	0.0416	6.56E-13	6.56E-13	6.56E-13	6.56E-13
C3H8	0	0	0	0	0	0	1.02E-19	8.40E-03	1.02E-19	1.02E-19	1.02E-19	1.02E-19
C4H10	0	0	0	0	0	0	1.57E-26	1.80E-03	1.57E-26	1.57E-26	1.57E-26	1.57E-26
C2H2	0	0	0	0	0	0	2.99E-13	0	2.99E-13	2.99E-13	2.99E-13	2.99E-13
AR	0	0	0	0	0	0	4.06E-03	0	4.06E-03	4.06E-03	4.06E-03	4.06E-03
N-PEN-01	0	0	0	0	0	0	0	4.00E-04	0	0	0	0
N-HEX-01	0	0	0	0	0	0	0	4.00E-04	0	0	0	0
Mass Flow lb/hr												
H2O	15000	12200	12200	2800	2800	15000	2894.111	0	1447.055	1447.055	1447.055	1447.055
N2	0	0	0	0	0	0	4826.63	23.48389	2413.315	2413.315	2413.315	2413.315
O2	0	0	0	0	0	0	0	0	0	0	0	0
H2	0	0	0	0	0	0	220.9654	0	110.4827	110.4827	110.4827	110.4827
CO	0	0	0	0	0	0	765.1093	0	382.5547	382.5547	382.5547	382.5547
CO2	0	0	0	0	0	0	1371.547	10.75048	685.7736	685.7736	685.7736	685.7736
CH4	0	0	0	0	0	0	0.1162932	826.4294	0.0581466	0.0581466	0.0581466	0.0581466
C2H6	0	0	0	0	0	0	9.93E-09	69.44604	4.96E-09	4.96E-09	4.96E-09	4.96E-09
C3H8	0	0	0	0	0	0	2.27E-15	20.56409	1.13E-15	1.13E-15	1.13E-15	1.13E-15
C4H10	0	0	0	0	0	0	4.60E-22	5.808306	2.30E-22	2.30E-22	2.30E-22	2.30E-22
C2H2	0	0	0	0	0	0	3.91E-09	0	1.96E-09	1.96E-09	1.96E-09	1.96E-09
AR	0	0	0	0	0	0	81.51961	0	40.7598	40.7598	40.7598	40.7598
N-PEN-01	0	0	0	0	0	0	0	1.602227	0	0	0	0
N-HEX-01	0	0	0	0	0	0	0	1.913719	0	0	0	0

The POGT-Boiler system is capable of generating 418.5 kWe (for comparison, two conventional TA100 units would generate 190 kWe total) and 12,200 lb/h steam at 200 psia and 500 °F. Overall system efficiency (HHV) is estimated at 77.3%.

The models of POGT systems that were prepared in Aspen-Plus are available. It is intended that these models will be used to support continued development and commercialization of POGT technology.

2.4. POGT Unit Boiler Lab Demonstration

2.4.1. POGT-Boiler Burner Development and Test Plan

A dual fuel, natural gas and syngas, burner design was developed for efficient low-emission combustion of the high-temperature, hydrogen-rich fuel gas exhausted from the POGT. The burner concept, as shown in Figure , combines premixed combustion, internal recirculation of partial combustion products, and controlled air or fuel-air staging. These techniques promote

stable, uniform combustion, minimize peak flame temperatures, prevent the formation of high-oxygen pockets, and enhance heat transfer to reduce second-stage combustion temperatures. Premixing of fuel and air prior to combustion reduces the peak flame temperature. The recirculation sleeve creates an internal flow of partial combustion gases, forced by the kinetic energy of the jet, back to the root of the flame. These recirculated gases transfer a portion of their sensible heat to the sleeve, which then radiates to the cold boiler walls, further moderating combustion chamber temperatures.

These effects combine to dramatically reduce NOx formation while maintaining good fuel burnout characteristics. Moreover, this is achieved at higher energy efficiency than competing burners that use high levels of flue gas recirculation (FGR), high excess air, steam injection, or water injection to achieve ultra-low NOx emissions. The energy penalties incurred by those competing methods include higher stack losses and higher fan power requirements and, furthermore, operators often report difficulties such as noise, pulsation, and flame instability when these methods are used to bring NOx to single-digit ppmv levels. Typically, about 35% FGR is required to achieve NOx less than 9 ppmv in conventional burners.

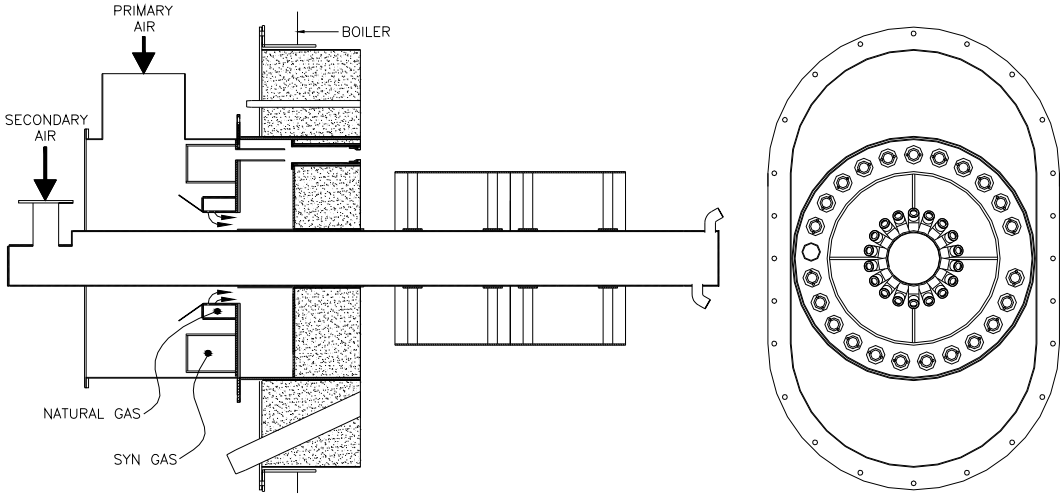

Figure 75- Dual Fuel Prototype Burner Concept

Source: Gas Technology Institute

In principle, the dual fuel burner can be used on any type of steam or hot water boiler including fire tube and water tube types, as well as process heaters and absorption chillers. This application focused on the industrial/institutional retrofit application area of medium to large packaged water tube boilers. The dual fuel burner design specifications are outlined in Table .

Table 16- Dual Fuel Burner Design Specifications

Burner output capacity, MMBtu/hr	20
Burner capacity natural gas, CFH	9,737
Natural gas supply pressure, PSIG	30
Burner capacity syngas, CFH	133,333
Syngas supply pressure, in wc.	16
Combustion air temperature, °F	80
Syngas temperature, °F	600

An engineering drawing package was prepared for the burner fabrication. Assembly drawings were completed for the general arrangement, wind box, syngas manifold, natural gas manifold, secondary air components, recirculation sleeve, front plate, and secondary air nozzles. The burner was fabricated and installed on the 20 MMBtu/hr boiler at GTI's Combustion Laboratory as shown in Figure 76.

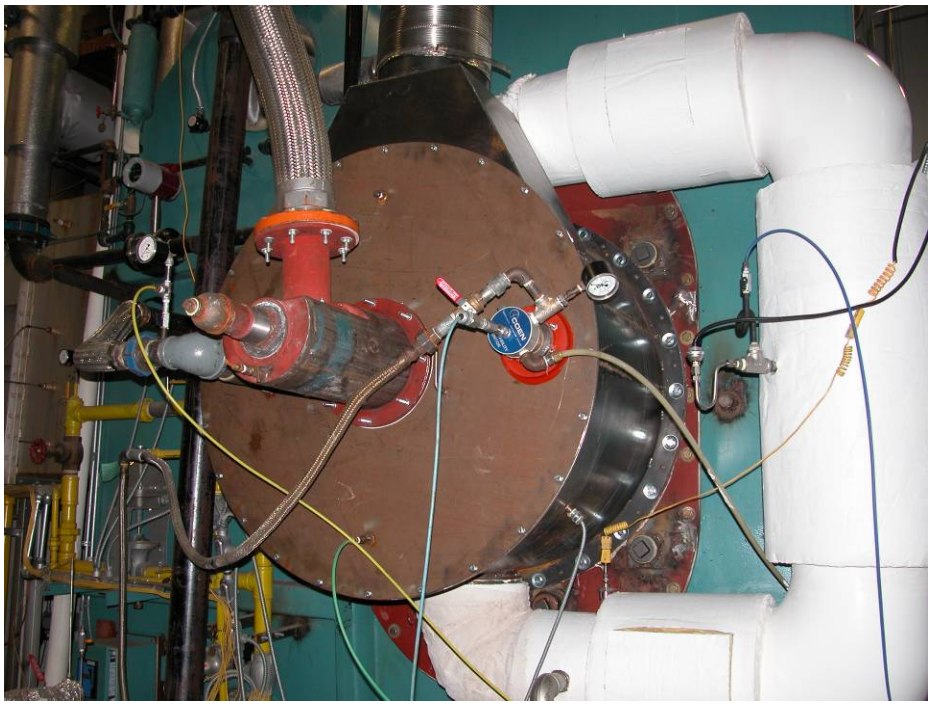

Figure 76- Assembled Dual Fuel Prototype Burner
Source: Gas Technology Institute

20 MMBtu/hr Prototype Burner Laboratory Evaluation

This section describes the 20 MMBtu/hr water tube boiler test facility and laboratory equipment used to evaluate the dual-fuel prototype burner. Other discussion topics include the fuel supply, combustion air supply systems, and analytical instrumentation.

20 MMBtu/hr Water tube Boiler Test Facility

The dual fuel prototype burner was evaluated on a 20 MMBtu/hr Cleaver Brooks water tube boiler, Model No. D-34. The boiler has a total heating surface of 1819 square feet and an American Boiler Manufacture Association furnace volume of 425 cubic feet, with a rated steam pressure of 270 PSIG. The present installation allows for operation at a steam pressure of 150 PSIG. The water tube boiler test facility is shown in Figure 78. It should be noted that the opening in the front boiler wall is larger than normal. In this research boiler, the larger opening allows for the evaluation of multiple burner sizes. Installation of the water tube boiler was typical of those encountered in an industrial setting, except there is no return of condensate because there is no process. Boiler feed water is supplied through city water connections and

then softened before entering the make-up water tank. Additional chemicals are added to the tank to protect the boiler water walls. Steam is supplied to the tank and preheats the make-up water to 200°F before it enters the boiler. The steam generated by the boiler is vented to the atmosphere through a silencer, which is located above the roof. The breech connecting the stack to the boiler has five gas sampling ports. These sampling ports are used to verify that the flue gas composition is consistent through the entire cross section of the breech. Once verified, a single point measurement is sufficient for exhaust gas sample monitoring. The boiler stack is of typical field construction with a butterfly damper to provide backpressure in the boiler if needed.

The Fuel Supply

The natural gas supply line to the burner is standard 2-inch pipe with a double block-and-bleed valve arrangement. The components from the supply end are a Roots flow meter, manual shutoff valve, gas pressure regulator, supply pressure gauge, Sierra mass flow meter, manual shutoff valve, supply pressure gauge, gas pressure regulator, low-pressure switch, safety solenoid valve, vent solenoid valve, second safety solenoid valve, and a high-pressure switch. The data from the Sierra mass flow meter is recorded directly to the data acquisition system. The gas supply line supplies gas to a North American flow control valve downstream of which the gas line branches into two separate, but parallel, lines equipped with limiting orifices and hand valves. The individual lines can supply metered natural gas to individual burners. Natural gas is combined with combustion air inside the burner.

Combustion Air Supply

The combustion air is supplied by a New York Blower Company pressure blower, which is mounted near the burner, and piped to the burner. Combustion air flow is controlled via a cabinet-mounted variable frequency drive in conjunction with actuated butterfly valves on both the primary and secondary air lines. Flow rate for both the primary and secondary air is measured with Sierra mass flow meters, with the data recorded directly by the data acquisition system.

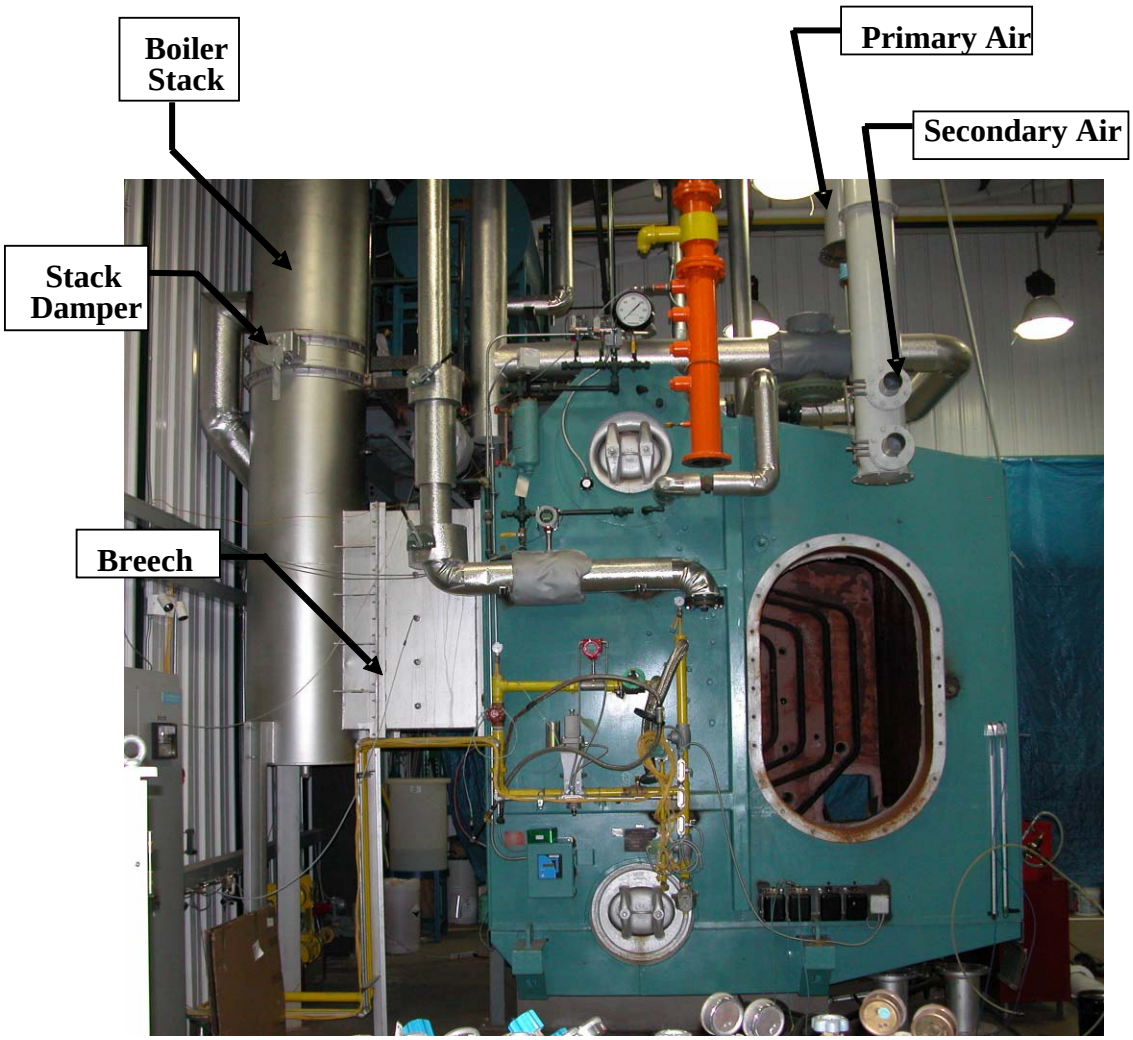

Figure 77 Photograph of 20 MMBTU/Hr Water Tube Boiler Test Facility at GTI

Source: Gas Technology Institute

Analytical Equipment and Measurements

The data acquisition system collected data continuously at specified points during burner evaluation. The major flow rate measurements recorded were primary and secondary combustion air, natural gas, and syngas gas. Appropriate boiler operation parameters, and NO/NOx, CO, CO_2, and O_2 emissions from the burner and in the exhaust gas, as well as exhaust gas temperature, were recorded. The static pressure at the combustion chamber exit, burner wind box, and fuel manifold were measured with manometers. Type "R" thermocouples were installed at the boiler exit.

The exhaust gas sample was drawn through a 1/4-inch-OD by 3-foot-long, stainless steel probe. The gas sample was withdrawn using oil-less vacuum pumps and passed through sample conditioning trains, which consist of the following:

- A water trap to remove any condensate.
- A membrane dryer for removing the moisture.

The sample conditioning trains are located near the probe and are followed downstream by Teflon sample lines to deliver the gas sample to the gas analyzers through a sample flow control and distribution panel. The control panel (shown in Figure 79) facilitates easy switching between gas sampling and instrument calibration.

Figure 78. Gas Sampling Flow Control and Instrumentation
Source: Gas Technology Institute

The flue gas composition was measured using continuous emission gas monitors. The following gas analyzers were utilized:

- An Eco Physics Model CLD 700 EL chemiluminescence NOx analyzer.
- A Rosemount Analytical Model 880A dispersed infrared carbon monoxide analyzer.
- A Rosemount Analytical Model 880A dispersed infrared carbon dioxide analyzer.
- A Rosemount Model 400 flame ionization total hydrocarbons analyzer.
- A Rosemount Analytical Model 755R paramagnetic oxygen analyzer.

All of the instruments were calibrated using pure nitrogen to establish the "zero" and an appropriate span gas to set the "gain." An analysis of the certified span gas mixture used during the evaluation follows:

- NOx: 79.8 vppm
- CO (low): 924 vppm

- CO (high): 3.99%
- CO_2: 17.86%
- O_2: 8.04%

2.4.2. POGT-Boiler Burner Modeling and Testing

Burner/boiler Aspen-Plus and CFD modeling were used for assisting design calculations of the 20 MMBtu/hr dual fuel prototype burner. The physical models utilized in the calculations are presented below in Table 11. Several cases were investigated including: 1) Natural gas 9.9 MMBtu/hr, syngas 9.4 MMBtu/hr; 2) natural gas 5.0 MMBtu/hr, syngas 9.4 MMBtu/hr; 3) Natural gas 5.0 MMBtu/hr, syngas 5.0 MMBtu/hr; and 4) natural gas 5.0 MMBtu/hr.

Table 117 Physical Models Used for CFD Calculations

Model	Settings
Natural gas firing rate, MMBtu/hr	9.9
Syngas firing rate, MMBtu/hr	9.4
Natural gas flow rate, lb/hr	465
Syngas flow rate, lb/hr	9,070
Primary air flow rate, lb/hr	16,821
Secondary air flow rate, lb/hr	448
Primary air velocity, ft/s	275.6
Secondary air velocity, ft/s	50.0
Syngas inlet temperature, °F	600
Natural gas inlet temperature, °F	77
Mixture inlet temperature, °F	261
Inlet species composition (%, v/v):	
CH4	3.19
H2	3.70
CO	1.85
O2	11.67
CO2	1.34
N2	58.47
H2O	19.77

The influence of turbulence on the reaction rate was modeled using the eddy-dissipation model of Magnussen and Hjertager. The Arrhenius reaction rates were combined with the eddy-dissipation model reaction rates (adjusted to provide postulated interaction between chemical reaction and turbulent mixing). The following two-step chemistry model, representing the combustion of methane in air, was implemented:

- Step 1: CH4 + 3/2 (O2 + 3.76 N2) —> CO + 2 H2O + 3/2 * 3.76 N2
- Step 2: CO + 1/2 (O2 + 3.76 N2) —> CO2 +1/2 * 3.76 N2

Radioactive heat transfer within the burner was modeled using the P-1 radiation model in FLUENT®. Turbulent flow simulations were performed using the standard two equation k-ε model of Fluent with the standard wall functions. Default settings in FLUENT® were used for turbulence model settings.

The CFD mesh was built based on the current understanding of the modeled flame. A fine mesh was built for the area around the fuel inlet jets, the beginning and the end of the recirculation sleeve, and the secondary flame zone. Special attention was given to the recirculation sleeve surface area. The mesh was built in such way to keep y+ values around 30 near the surface. The adaptation of the mesh near the insert surface fuel inlets and secondary air inlet was carried out during the solution. The total grid, as shown in Figure 79, consists of approximately 1.2 million cells.

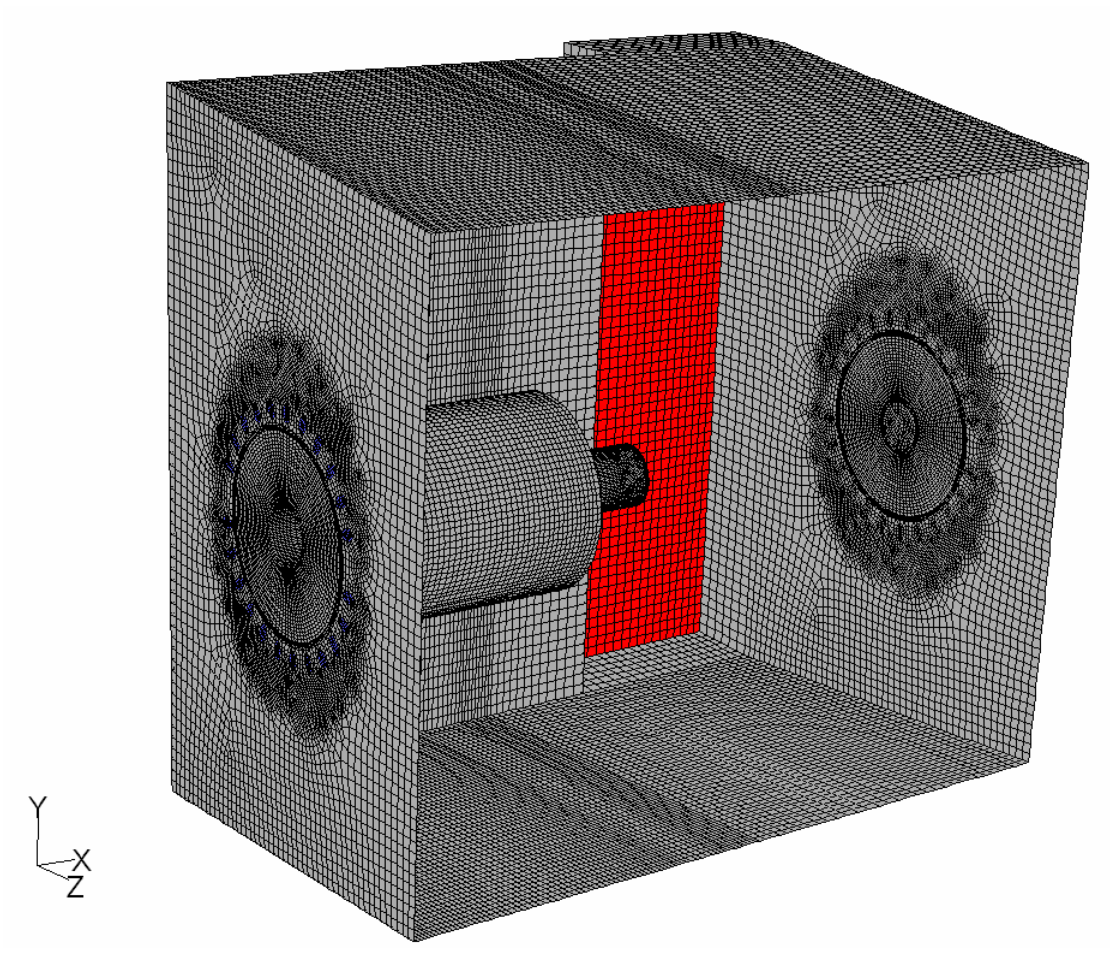

Figure 79. Grid of Dual Fuel Prototype Burner and 20 MMBtu/hr Water tube Boiler
Source: Gas Technology Institute

Physical properties of the gases involved (heat capacity and conductivity) were computed from mixture rules for species dependence. The heat capacity of the mixture was assumed to be a

function of temperature using the polynomial fit. The density of the mixture was changed to an incompressible ideal gas, i.e., the density changes as a function of temperature and species concentrations, and the variability with pressure was ignored. The molecular viscosity was assumed to be a constant. The boundary conditions used in the analysis were derived from an engineering study of the industrial water tube boiler.

Results of the modeling showed that overall the temperature is low with average temperatures about 1500°F (see Figure 80). NOx is mostly produced in hot zones associated with the nozzle discharge. CFD model calculations suggested several modifications that reduced NOx emissions without making gross changes to the burner geometry. Promoting more uniform mixing of the nozzle discharge by tailoring the arrangement of primary nozzles to the combustion chamber profile and aspect ratio will decrease peak flame temperatures. The modeling results show that optimization of the current design of the burner could include the optimization of nozzles size/location in order to fit the flame to the combustion chamber. The results of the CFD modeling were applied to the design of the 20 MMBtu/hr dual fuel prototype burner, which resulted in a faster transition from initial installation to demonstration of performance. Unfortunately, the model was not validated on the test results of the 20 MMBtu/hr prototype burner since the boiler was derated.

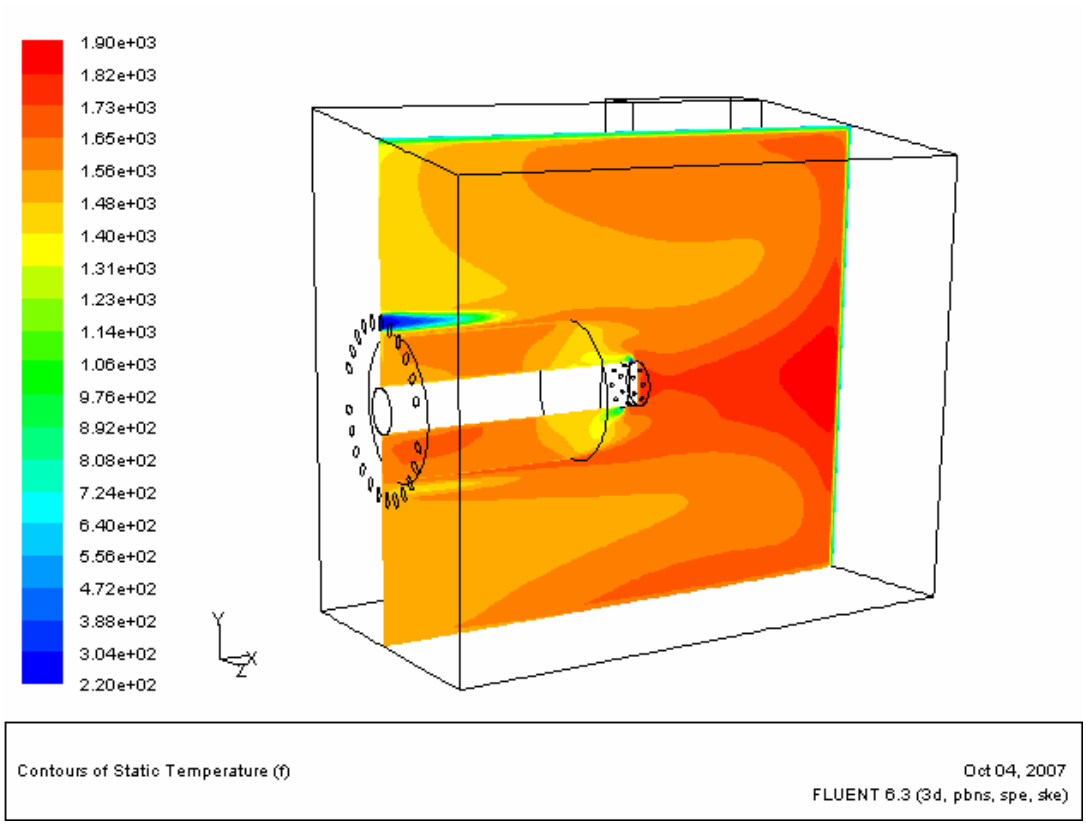

Figure 80. CFD Model Temperature Profile

Source: Gas Technology Institute

The dual fuel burner was designed to fire two fuels: natural gas and syngas. Burner shakedown and evaluation was initiated with air only tests followed by check out of the burner management system and pilot firing. No issues were encountered with the main flame scanner and its reliability sensing the flame during the pilot trial. The start up of main flame was performed with natural gas as the main fuel. The burner was successfully fired up to 50% load with stable combustion. Settings were determined based on fuel and combustion air flow, as well as, stack oxygen data. Table reveals that overall, measured NOx and CO emissions were low for the initial attempt. At 10 MMBtu/hr the flame was visually "cool" and unorganized. The corresponding wind box pressure was only 2.8 in wc. Higher firing rates were not possible since the boiler was recently derated to 10 MMBtu/hr.

Table 18. Preliminary Natural Gas Performance Data

Burner input capacity, MMBtu/hr	5.34	10.14	10.14
Primary stoichiometry	1.29	1.21	1.31
NOx @3% O_2	15.6	17.0	14.5
CO, ppmv	10	3	3
O_2, %	7.3	5.2	5.3

2.4.3. POGT-Boiler Burner Specification Development

A dual fuel, natural gas and syngas, burner was designed for a 20 MMBtu/hr water tube boiler. Table 19 provides the design conditions at different firing rates for natural gas.

The design was developed and fabricated based on results from Aspen-Plus and CFD modeling. Parametric tests would be performed to refine the final burner specifications as a function of fuel distribution, fuel supply pressure, steam demand, excess air, combustion air distribution between the stages, and other system parameters. Measurements of natural gas and syngas composition, heating value, specific gravity, mass flow, and static pressure along with measurements of combustion air, mass flow, static pressure, and temperature, would be used to enhance the final burner specifications.

Preliminary results from the dual-fuel prototype burner presented above revealed that the air staging approach may not be necessary. Parametric tests isolating the secondary air supply will address the topic. A single stage design approach is possible and was previously developed for natural gas-fired fire tube and water tube boilers. Primary nozzle sizing is another topic that needs further analysis. The burner was originally designed for an output capacity of 20 MMBtu/hr. Unfortunately, testing at output capacities higher than 10 MMBtu/hr is not possible since the boiler was derated. Appropriate nozzle sizing to reduce the cross sectional area will address the topic.

Table 19 Design Conditions for Dual-Fuel Firing

Natural gas firing rate, MMBtu/hr	19.8	9.9	0
Syngas firing rate, MMBtu/hr	0	9.4	18.8
Natural gas flow rate, lb/hr	960	465	0
Syngas flow rate, lb/hr	0	9,070	18,720
Primary air flow rate, lb/hr	16,128	16,821	30,101
Secondary air flow rate, lb/hr	4,032	448	4,122
Primary air velocity, ft/s	118	275	505
Secondary air velocity, ft/s	122	50	124
Syngas inlet temperature, °F	0	600	500

Natural gas inlet temperature, °F	77	77	0

2.5. POGT Unit-Boiler Lab Demonstration

2.5.1. Lab Test System Design and Test Plan

A POGT-Boiler system was designed including interconnecting pipeline to supply syngas from POGT to the water tube boiler. The interconnecting pipeline, as shown in Figure , consists of a 12-inch line with control actuator, syngas cooler, expansion bellow, supply actuator, and supply branches to the top and bottom of the syngas manifold within the dual fuel burner. Each supply branch to the dual fuel burner has its own expansion bellow to accommodate linear growth. The syngas manifold is supplied from both the top and bottom to ensure uniform distribution. The interconnecting pipeline includes a syngas cooler that reduces the gas temperature from approximately 1000°F to 600°F, the burner design specification. A design drawing package was prepared, and the system was fabricated.

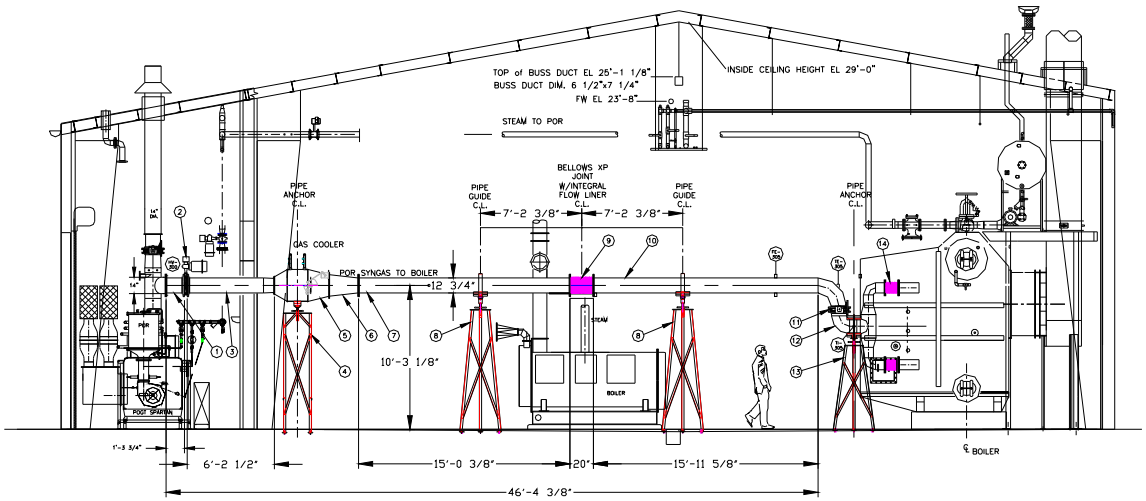

Figure 81 General Arrangement Interconnecting Pipeline

Source: Gas Technology Institute

2.5.2. POGT-Boiler Lab Installation

The interconnecting pipeline to supply syngas from POGT to the water tube boiler was installed at GTI's combustion laboratory with a 2-inch layer of insulation.

2.5.3. POGT-Boiler Lab Testing

Preliminary testing was performed with the dual fuel burner firing mixtures of natural gas and syngas. Table reveals the preliminary results. Overall, the NOx emissions are very low across the firing range. Whereas, the high CO emissions are attributed to the air stage design,

parametric testing would identify whether the isolation and redirection of combustion air will enhance burner performance.

Table 20. Preliminary Natural Gas/Syngas Performance Data

Boiler Input Capacity, MMBtu/hr	Natural Gas Input, MMBtu/hr	Syngas Input, MMBtu/hr	Hydrogen, %	Primary Stoichiometry	NOx (@ 3% O_2), ppmv	CO (vol.), ppmv	O_2 (vol), %
9.17	8.52	0.65	6.9	1.12	8.5	505	2.4
9.94	9.04	0.9	7.7	1.14	12.1	84	2.7
10.06	9.27	0.79	7.7	1.13	13.7	41	2.4
10.31	9.39	0.91	8	1.1	18.4	16	2.1
9.99	8.63	1.36	8.1	1.13	9.2	202	2.4
10.21	9.39	0.82	8.1	1.12	23.9	3	2.3
9.4	9.21	0.19	8.2	1.27	29.8	3	4.6
9.93	8.59	1.34	8.2	1.13	8.8	263	2.6
10.26	8.9	1.36	8.3	1.09	11.2	241	1.9
9.79	8.47	1.32	8.4	1.15	8.7	257	2.8
9.78	8.1	1.69	8.5	1.15	5.7	753	2.8
9.92	8.34	1.58	9	1.15	7.8	277	2.9

2.6. Technology Transfer Plan

Technology transfer is the process whereby technology, designs, intellectual property access, materials specifications, manufacturing techniques, and general technical know-how are transferred from the R&D segment of engineering to the manufacturing and business sectors.

GTI is a contract R&D, laboratory services and technical educational services organization. GTI does not typically manufacture or commercialize the technologies it develops. The business model used at GTI to commercialize products from technology it develops requires licensing of Intellectual Property to commercialization partners and then providing technical support, as needed, to ensure that they can quickly and effectively manufacture and offer these products to the market. In many GTI projects, including the development of POGT technology, the natural gas industry provides match funding support required by sponsors. When providing these funds, the expectation is that natural gas customers and ratepayers will obtain increased natural gas energy service value from improved or new natural gas-fueled equipment. Higher performing equipment like the POGT technology has the potential to lower the cost of service to natural gas end-users.

To be most effective, the technology transfer plan should be developed and executed in cooperation with prospective commercialization/manufacturing partners who either have similar current products in commercial service that can be improved or demonstrate the capability and commitment to enter a new business with the new technology. In the case of POGT systems, GTI has begun discussions with several potential commercialization partners including Elliott Energy Systems, a manufacturer of micro-turbines; Alturdyne , a company that

specializes in packaging micro-turbines and small gas turbines for distributed generation; Brayton Energy, a company capable of designing and engineering POGT micro-turbines and also with experience in packaging these systems; Solar Turbines, a major manufacturer of industrial gas turbines that has followed the development and testing (at GTI) of a POGT built from their Spartan product , and Siemens, a supplier of large industrial and utility sized gas turbines who is currently evaluating POGT (with GTI) for potential operation on syngas from coal gasification .

Prospective commercial partners will need to be persuaded that there is a business case for POGT for the market(s) they serve or want to serve. Several distinct initial target market applications of the POGT technology have been identified and are at the preliminary stage of evaluation Additional POGT systems applications may be possible. For the microturbine based-POGT, the authors engineering analysis and market evaluation suggests that the technology could potentially be integrated into packaged systems with boilers, furnaces, or process heaters. POGT-boiler systems would provide a combined high-efficiency power generation turbine plus a two-stage, ultra-low NOx burner for commercial/small industrial boilers. For a POGT derived from an industrial gas turbine, an integrated system that warrants priority consideration is one that produces high efficiency electrical power with the fuel gas exiting the turbine used as syngas to supply hydrogen in refinery or chemical plant. The technology transfer plan is to use the results from the Energy Commission project to support preparation of the business case for a micro-turbine POGT and an industrial sized turbine in the applications just describe. Toward this end, GTI prepared a proposal that was submitted to the Utilization Technology Development (UTD) NFP to support preparation of the business case for POGT system in clean combined heat and power applications. A copy of this proposal offering is included with the attachments. The UTD was still evaluating this proposal at the time this report was written.

The business case will include estimates of the potential for POGT technology to supply the gas turbine manufacturers' customers with products that enhance their competitiveness and can generate an acceptable return on their investments. The technology transfer plan includes discussions to assist us in identifying which gas turbine components, POGT configuration, air compressors, syngas expansion turbines and recuperative heat exchangers to base a new product on. It is important to review with the manufacturers that there are two POGT configurations presently conceived that circumvent the need to develop an entirely new turbine or compressor. This is important because of the significant investment of time and money that is required for new product development. One concept would employ two partial oxidation reactors and two existing expansion turbines per existing or modified air compressor. The other concept would use one POR and one existing expansion turbine matched with an air compressor from a smaller gas turbine than that from which the expansion turbine was selected. Initial discussions with microturbine and industrial gas turbine manufacturers will also cover the extent to which internal heat exchangers, steam super-heater and the fuel pre-heater are worthwhile for inclusion in the POGT system. This will based upon consideration of trade-offs between lower equipment cost and simpler interconnection of POGT components versus different levels of increased efficiency relative to a conventional gas turbine depending

upon whether the sensible heat in the POGT expansion turbine exhaust is used directly to produce steam in the boiler or also supplies heat to the POR.

With these basic system configuration choices and performance analyses performed by GTI with its model of the POGT cycle on the ASPEN, commercially available, computer code, the manufacturers can then proceed with their own internal studies of development costs, eventual commercial product manufacturing cost, price to customers, market sizes, potential increase in gross sales, reasonably expected future sales volumes, and other business investment factors for their planning and investment evaluation process.

With a favorable decision by one or more gas turbine manufacturers to license intellectual property on POGT systems and offer the technology commercially, it would be expected that the gas turbine manufacturers would have responsibility for all turbo machinery (i.e., the air compressors and expansion turbines) and internal heat exchangers (several turbine manufacturers use recuperators of its own fabrication on at least one of their existing products). GTI's role during the transition phase between the just completed "proof-of-concept/feasibility" phase and subsequent prototype development and product demonstration phases includes system performance analysis, performance tradeoff studies, POR design and analysis, secondary ultra-low NOx burnout combustor development, emissions analysis, and support for verification of a prototype POGT.

For product demonstration, the commercialization partner(s), with support from GTI, must design and conduct performance verification of an integrated air compressor, steam supply to the POR(s), POR(s) as component(s), expansion turbines, recuperative steam super-heater, recuperative fuel pre-heater, and exhaust burnout combustion (e.g., in a boiler), all operating at the temperatures expected in commercial POGT units. Following successful demonstration testing, the participating gas turbine manufacturer(s) should be able to produce POGT products promptly provided that no totally new component technology (except possibly some design evolution in the POR combustion/reactor itself) is required. The reconfiguration and custom tailoring of components currently being made for commercial offerings is within the technical capabilities of the gas turbine manufacturers. The commercial product POR, combustor/reactor, is expected to be somewhat similar to a gas turbine combustor and therefore could be supplied by the gas turbine manufacturers. As the technology matures and generates profits, the licensee(s) could be expected to make improvements in POGT components and assemblies and offer next generation products.

2.7. Production Readiness Plan

The Technology Transfer Plan assumes that POR will be the only substantially new technology component in POGT systems and all other components are currently either in production today or could be based on that technology, albeit with different matching of compressors and turbines than currently is used. GTI believes that this is a major feature of POGT favoring its prompt commercialization once an integrated POGT system has been demonstrated with a participating manufacturer committed to product development and commercialization. It is believed that the first generation operating POR should be quite similar to a gas turbine

combustor and this should result in a rapid, not expensive, low-risk development effort. All components can be made in existing facilities with currently commercial materials.

The GTI business model used for technology transfer places the responsibility of producing commercial POGT systems with the licensee(s). Specific licensing agreements are negotiated with the manufacturer(s)/partner(s) defining the nature of the business relationship, scope of responsibility for each party, which party pays what costs, and division of eventual royalties. For example, for an integrated micro-turbine based POGT-boiler system, the boiler manufacturer, possibly Cleaver-Brooks, would be heavily involved to define the performance and price requirements of the combined unit to ensure that it matches its customers' payback requirements. Performance benefits, component costs, configuration complexity, and temperature of the POGT exhaust entering the boiler are issues in which they will have a vital concern, as it would likely lead the marketing effort.

For the application of the POGT for co-production of power and syngas for hydrogen production, there may be additional production readiness steps required that relate to hydrogen separation and purification processes necessary to satisfy the specific requirements for the customer. In a project currently supported by the United States Department of Energy, GTI is testing a slip stream from the POGT test unit in a purification system that includes water-gas shift and partial swing absorption. Results from this work should provide a foundation for confirming whether any special requirements need to be addressed.

With these types of issues resolved, product development can begin in earnest. The following phases and activities, at a minimum, are envisioned:

Phase 1 Integrated Prototype Design, Construction, and Test

- Conceptual product design, division of responsibilities for engineering, manufacturing and testing responsibilities.
- Performance, power, exhaust temperature, chemical composition of the syngas, and economic analyses of development investment for future return on development investment.
- Decision to proceed with integrated test unit.
- Laboratory testing to confirm key parameters, such as NOx emissions.
- Design and fabrication of complete, integrated POGT, including internal heat exchangers as decided, including startup and control system.
- Testing of integrated POGT.
- Analysis of data, review of costs and performance. Update of market analysis.

Phase 2 Commercial Prototype

- Decision to proceed with commercial prototype.

- Prototype (commercial configuration) design and engineering. POGT-complete package user cost/benefit analysis. Prototype cost analysis.
- Decision to build prototype.
- Prototype component manufacture and procurement, assembly.
- Test facility preparation for prototype.
- Install prototype and test.
- Test data analysis.

Phase 3 Product Launch

- Marketing and Sales
- Manufacturing Ramp Up

3.0 Project Results

Cost Considerations of POGT Systems

Cost considerations include three categories of cost; R&D cost, non-recurring engineering (NRE) and tooling costs, and production costs

The basis assumption is that there will be no R&D costs for the development of a new expansion turbine or compressor. The answer to the question of the possibility of modification of existing turbines and compressors by destaging (removal of a stage at either the high pressure or low pressure end) or other modification, such as variable inlet guide vanes, is dependent on the modification costs and the extent of verification testing needed. Only the turbine manufacturer can answer the question of how much such modification will cost.

Some R&D cost will be involved in arriving at a production version of the POR.

While the heat exchangers, the steam superheater and the fuel preheater, are within the envelope of temperatures and pressures of gas turbine recuperators, they will require some customizing engineering, NRE, and production tooling in order to be manufactured at economic cost. It is to be noted that gas turbine recuperators have a reputation for developing leaks after service for a few years. Such an uncertainty in life and reliability will have to be addressed during the product development and testing portion of the program. For reliability and cost reasons, POGT systems without such internal heat exchangers that leave the sensible heat in the POGT exhaust for use as preheated fuel for the boiler may be preferable for integrated boiler-POGT micro turbine system, offering lower cost and comparable power and steam. Such a POGT would require a different amount of (saturated) steam than one with a steam superheater and fuel preheater. Different inlet conditions and steam flow to the microturbine POR will result in different gas volumes and consequential need for a different combination of air compressor and expansion turbine. All of these cycle choices involve cost considerations. Alternatively industrial, heavy-duty heat exchangers may be used for the steam superheater and fuel preheater; however, these components will be operating from a high-temperature (1200 F and 1000F) sources of syngas rich in hydrogen and will consequently also require life and reliability testing.

Microturbine compressors and turbines are derivatives of turbocharger compressor and turbines made, in volume, for turbo-charging reciprocating engines for increased power. Non-stock components, with slightly different flows and pressure ratios from stock components are routinely made with a modest amount of non-recurring engineering (of the order of $100,000.) and tooling (of the order of $250,000). Considering the investments in other, similar customizing non-recurring engineering and tooling costs these NRE, described in the following, that are

necessary for the balance of the system, may not be out of proportion. Customized microturbine compressors and turbines cost the same as stock models of the same capacity and material when produced with tooling for manufacturing in the same volume. Volume production is the key to low component cost.

Electric generator choices for micro turbines include a highspeed alternator or a gearbox and conventional (3600 rpm) generator. The high speed alternator requires a combined rectifier and 60 Hz generator, as employed on some micro turbines. The Ingersoll-Rand micro turbines have gearboxes and 3600 rpm generators while the Capstone and Elliott microturbines have highspeed alternators and frequency inverters.

The high speed generator and frequency inverter combination may require custom engineering and tooling unless a production system is found for the power level of the POGT.

In industrial and utility-sized gas turbines, the compressors and expansion turbines are axial flow gas dynamic machine components, not radial flow components as are used on micro turbines. Industrial gas turbines have much higher pressure ratios than are found in micro turbines. While a mix and match approach to selection of these components cannot be ruled out, the concept for industrial POGT is to use two POR combustor/reactors and expansion turbines, rather than one, per air compressor, thereby avoiding many gas dynamic turbine and compressor issues. One expansion turbine will be on the same shaft and in the same casing as the compressor. This shaft will just be like a convention industrial gas turbine. The second expansion turbine produces the same gross power as the first expansion turbine except that it has no air compressor to consume (approximately) two-thirds of its power, leaving only one third of the turbine gross power to drive the electric generator. The second expansion turbine would drive an electric generator three times the capacity of the one on the air compressor and turbine shaft. This turbo generator could be an independent shaft or be on the same shaft extended as the main machine. In either event the casing for the second turbine would have to have special ends to contain the pressurized expansion gas. This will require some NRE and tooling cost. The second turbine would have to have its own thrust and journal bearings. A two shaft arrangement is likely to make the handling of the hot exhaust from the two turbines easier.

Note: 12 MW industrial gas turbines use a small amount of compressor bleed air for turbine disk and high temperature nozzle and blade cooling. In a POGT machine the air would have to be replaced by steam for internal cooling as the hot expansion gas in a POGT is highly combustible and a flame would result wherever the air mixed with the expansion gas. This would incur some non recurring engineering cost. The same steam that is provided to the POR would be also supplied to the turbines for disk, nozzle and blade cooling.

With the above discussion the following rough order of magnitude (ROM) cost analysis for a micro turbine based POGT product was prepared. These estimates are:

	Conventional 100 kW microturbine	400 kW POGT based on 100 kW MT
Compressor	$ 5,000	$ 5,000
Turbine	10,000	30,000
Recuperator/Internal Heat exchangers	15,000	30,000
Generator/inverter	10,000	40,000
Combustor (POR) and piping	2,500	15,000
Controls	2,500	7,500
Boiler (HRSG) for POGT		20,000
Packaging with starter	5,000	12,500
Total	$50,000	$160,000
$/kW	$500/kW	$400/kW
Using steam from the boiler in an integrated product.		$350/kW

4.0 Conclusions and Recommendations

4.1. Conclusions

A POGT system was operated successfully at a stoichiometric ratio around 0.4 and an expansion turbine inlet temperature typical of microturbines and small gas turbines, demonstrating the feasibility of the POGT process. POGT takes advantage of the unique chemistry of the steam tempered partial oxidation chemical reaction to produce approximately double the volume of high temperature pressurized gas per unit of inlet air compressed as compared to that of a conventional gas turbine. This process results in the POGT exhaust containing a large fraction of the energy entering the POGT flowing out of the system in its exhaust. The exhaust emissions, after the product low-BTU syngas was burned to completion in a boiler, were below 9 ppmv NOx at 3% O2. This NOx level is an extremely low level of NOx, especially considering that this was the first experimental embodiment and operation of the POGT system. A chemistry, chemical energy, and heat and power analysis computer program (ASPEN Plus) determined that the power produced from the POGT in a micro turbine application, including recuperative heat exchangers to recycle exhaust heat into superheating the steam and preheating the natural gas fuel, would produce power at a net power to net fuel energy consumed efficiency of over 68%. This unusually high efficiency is explained in this report.

The POGT system produces a syngas, containing hydrogen, carbon monoxide, carbon dioxide, steam and nitrogen (H2, CO, CO2, H2O and N2) and may be used as a source of hydrogen for refinery, chemical process or fuel cell operation and is believed to be preferable for use in an ultra-low-NOx combustor to generate power and heat for steam, furnace or other application.

With POGT systems, lower excess oxygen can be used in boilers and furnaces burning the low BTU syngas, containing CO and H2 as fuel but with essentially no hydrocarbon fuel with its strong hydrogen-carbon bonds, while meeting NOx and CO emission requirements than can be used in fired boilers or unfired heat recovery steam generators, thereby reducing stack heat losses and improving CHP efficiency. The net chemical energy consumed in the POGT cycle for power generation enables power to be generated in an unusually high incremental efficiency. When the POGT exhaust is burned at low excess oxygen levels in a (conventional) high efficiency boiler, higher CHP efficiency can be obtained due to reduced stack loss (reduced sensible heat in the warm gases flowing up the stack) with low emissions due to the use of syngas rather than hydrocarbon fuel in the boiler.

A POGT system uses conventional air compressor and expansion turbine technologies, heat exchanger technology currently in practice in industrial heat exchanger and gas turbine recuperators and conventional boilers. In POGT systems the ratio of the size (volumetric capacity) of the expansion turbine to that of the air compressor is much greater than occurs in conventional gas turbines. For many designs, in particular for microturbine systems, off-the-shelf and custom-produced turbo machinery components used in diesel turbochargers are expected to be used, with the only component requiring engineering development being the

POR reactor itself. In larger, industrial-sized gas turbines, it may be possible that by combining compressors and turbines from different-sized machines, including possibly destaging turbines and modifying inlet guide vanes, such that the mix-and-match approach may be able to circumvent the need to develop new turbines or compressors. Based on the successful operation of the first gas turbine POR (reactor/combustor) built in the United States, this new component is expected to be only slightly different (larger with more complex internals and including steam injection components) than a conventional gas turbine combustor.

This POGT system, which produces large amounts of syngas (low BTU gas), suitable as a general fuel gas as well as a hydrogen source, along with the high-efficiency power, would be operated on a basis of the demand for the syngas or hydrogen rather than on a power demand basis, as without an economic use of the syngas the fuel cost for operation as a power generation only system would not be economic.

Three applications of POGT have been identified as having commercial potential based on their use of the syngas in economically advantageous manners. These applications are, 1) a small power generator, quite likely a microturbine, acting as the first stage of a two-stage combustion process to produce ultra low-NOx heat for boiler or furnace use along with high efficiency electric power, 2) a POGT for a small combined cycle in which the exhaust of the POGT is used as fuel for a boiler producing higher pressure, higher temperature steam, thereby enabling the bottoming cycle to be much more efficient than current small bottoming cycles, and 3) an industrial sized POGT producing syngas for use in a hydrogen supply system for refinery and petrochemical processing application. The syngas for hydrogen system could lead to a utility sized POGT for use as a hydrogen supply for fuel cell power generation whereby the net efficiency of power generation from the combined POGT and fuel cell power units is greater than that of the fuel cell alone. This combination of high-efficiency, ultra-low-NOx combustion systems for CHP application and the increase in power efficiency from fuel cell electric generation favor pursuing POGT further toward the goal of practical efficient and environmentally and economically advantageous new energy conversion products entering the market at this time when such equipment is sorely needed for both local environmental improvement and reduction in global warming.

4.2. Commercialization Potential

The bulk of the activity in the project just completed was devoted to an operating hardware demonstration of the feasibility of POGT. Parallel work examined markets to identify applications where the unique features of POGT created advantageous economics. Three attractive applications of POGT have been identified, 1) an ultra-low NOx boiler which produces power, at very high efficiency, simultaneously with steam, 2) a higher efficiency small combined cycle system in which the POGT exhaust syngas is used as boiler fuel so that steam at higher pressures and temperatures can be used in the bottoming cycle, and, 3) as a source of hydrogen rich gas for refinery and petrochemical plant operations requiring hydrogen along with power at high efficiency which also could be used as a hydrogen supply of a fuel cell power system whereby the overall efficiency of power generation is higher than that of the fuel

cell alone. The high power output and low ratio of compressor work to turbine power favor low cost of the turbo machinery components of this novel cycle.

Larger, industrial sized, POGT-boiler, integrated product for standard-sized boilers could follow the successful market entry of the micro turbine-commercial boiler. The microturbine-commercial boiler is a better initial target than the industrial sized systems as higher volume production of standard sizes is a characteristic of the small-sized boiler market.

The only component of a POGT involving new technology is the POR reactor/combustor. The first POR designed for the current proof-of-concept/feasibility demonstration worked adequately and was based on current gas turbine combustor technology. Internal heat exchangers are no different from, and possibly slightly simpler, than gas turbine recuperators currently in service. It may be possible to use industrial heat exchangers rather than gas turbine recuperators for the internal exchangers. Product development from current status, when performed employing current gas turbine technology, is not expected to be lengthy or highly expansive, as one would expect if an entirely new turbine were required. No increases in firing temperature, pressure ratio, or hot section cooling performance are needed, mitigating concern for expensive R & D.

4.3. Recommendations

One of the applications identified involves POGT being a part of a hydrogen supply, and one is for CHP microturbine application and boiler application and the other is for a more efficient small combinedcycle. It is recommended that one application be pursued and that investigations of the other applications continue to explore new product business-based opportunities.

Three microturbine manufacturers presently exist: Capstone, Elliot, and Ingersoll-Rand. It is recommended that, at this point, microturbines of all sizes in production made by all three manufacturers be considered as candidates for new product development of an integrated microturbine-commercial/light industrial boiler as a CHP package. In this manner, a steam capacity and micro turbine configuration best suited for the market may be selected. It is recommended that this new product development project be pursued.

Initial contacts with a major oil company/major liquid hydrocarbon fuel supplier have shown interest on their part as a potential user of a POGT product. It is recommended that such discussions continue and that serious consideration be given supporting a project that would be a hydrogen source for several applications.

4.4. Benefits to California

Meaningful estimates of market penetration cannot be made at this time so quantitative benefits are uncertain. Qualitative benefits include increased efficiency of power generation of POGT CHP systems due to their ability to operate at lower stack excess oxygen and increased efficiency of small combined cycle plants and environmental benefits include lower NOx at low exhaust oxygen content due to the burning of syngas with CO an H_2 as the combustibles rather than hydrocarbons with their stronger C-H bonds. The economic benefit of the, as yet

unevaluated, lower cost per kilowatt of power generation equipment is similarly extremely difficult to put a number on at this time. Lower cost power generation equipment will benefit both the manufacturer of such equipment and, to a greater extent, the user of such equipment.

5.0 Glossary

Acronym	Definition
AEE	Association of Energy Engineers
CAA	Clean Air Act
CHP	Combine heat and power
FGR	Flue gas recirculation
GRI	Gas Research Institute
GTI	Gas Technology Institute
HRSG	Heat recovery steam generator
IC	Internal combustion
IGT	Institute of Gas Technology
IPP	Independent Power Producer
NRS	New
NSPS	New Source Performance Standards
OSEC	Onsite Sycom Energy Corporation
PO	Partial oxidation
POG	Partial oxidation reactor
POGT	Partial oxidation gas turbine
SCR	Selective catalytic reduction
SIP	State implementation plan
SNCR	Selective non-catalytic reduction
TIT	Turbine inlet temperature
UTD	Utilization Technology Development

6.0 References

"CHP Potential at Federal Sites." Report by the United States Department of Energy Office of Energy Efficiency and Renewable Energy. Sep 2002.

"Combined Cycles, Waste Heat Recovery and Other Steam Systems." *Steam 40*. Babcock & Wilcox.

"Commercial Buildings Energy Consumption Survey, 1999." US DOE Energy Information Administration, Washington, D.C. 2003.

Freedman, Susan and Suzanne Watson. *Output-based Emission Standards: Advancing Innovative Energy Technologies.* Northeast-Midwest Institute. Washington, D.C. 2003.

Harbison, Gordon. *Environmental Controls: Understanding and Controlling NOx Emissions.* Ceramic Industry. 1 Feb. 2002. http://www.ceramicindustry.com/ci/cda/articleinformation/features/bnp__features__item/0,2710,71657,00.html

Hedman, Bruce, Ken Darrow and Tom Bourgeois. *Combined Heat and Power Market Potential for New York State: Final Report.* Report for the New York State Energy Research and Development Authority prepared by Energy Nexus Group, Onsite Energy Corporation and Pace Energy Project. Oct 2002.

Hedman, Bruce. *Assessment of On-Site Power Opportunities in the Industrial Sector.* Final report prepared by Onsite Energy Corporation for Oak Ridge National Laboratory on behalf of the United States Department of Energy Office of Industrial Technology. Mar 2001.

Hedman, Bruce. "The Market and Technical Potential for Combined Heat and Power in the Commercial/Institutional Sector." Final report prepared by Onsite Energy Corporation for the US DOE Energy Information Administration. Jan 2000.

Hedman, Bruce. *The Market and Technical Potential for Combined Heat and Power in the Industrial Sector*. Final report prepared by Onsite Energy Corporation for the US DOE Energy Information Administration. Jan 2000.

Personal communications with B. Hedman, EEA International.

Personal communications with Nick Schmidt, Platt's PowerDAT.

Thornton, Rob. *Cooling, Heating and Power in the Nation's Colleges and Universities: Census, Survey and Lessons Learned.* Report by the International District Energy Association for Oak Ridge National Laboratory and the US DOE. 21 Nov 2002. http://www.districtenergy.org/CHP_Census/

Appendices

APPENDIX A

Web Survey Created by MMC for Potential POGT Customers

Survey Questions

In order to learn more about GTI's POGT technology and be considered as a possible test site, please complete the following survey:

(This information is confidential and will only be used for research purposes.)

Personal Information

Company Name: Gas Technology Institute

First Name: Joe **Last Name:** Benarick

Business Location:

Address 1: 140 Washington Ave

Address 2:

City: Endicott **State:** NY **Zip:** 13760

Main Phone: 800-556-0055

Email Address: aleri@mmcweb.com

Number of facilities

How would you categorize your business?

Industry Other:

SIC Code:

How concerned are you about the energy component of your overall facility expenses?

Energy costs represent what percentage of your overall facility expenses?

What are the key issues influencing your facility's future energy decisions?
(Please rank the top CHP issues, with 1 being your most important issue.)

Lowering energy cost?

Decreasing power demand?

Increasing power reliability?

Building Energy Security?

Lessening environmental Impact? (NOx emissions)

Improving indoor air quality?

Other? (please specify)

What are your current facility electricity rates?

What are your current facility gas rates?

Ignoring cost and availability, what backup fuel(s) do you use/consider using?

How many hours do you run on backup fuel per year?

Electric power required (Peak):

Electric power required (Base):

Steam/hot water required (Peak):

Steam/hot water required (Base):

What quality steam do you or your customers require?

Does your organization currently have a CHP installation? (if no, skip to section III)

SECTION II: *Your Facility's CHP Installation*

(If your organization does not have a CHP installation, please skip to Section III.)

Type of power generation unit?

Web Survey Created by MMC for Potential POGT Customers, Continued

Are there any ongoing concerns that exist today with the operation of the CHP system?

Explain (if concern selected is yes)

SECTION III: *New or Expanded CHP*

Is there any consideration to expanding, upgrading, or installing (additional) CHP systems?

Based on what you know about CHP, is it a fit for your facility?

How knowledgeable are you about CHP?

What opportunities and/or outside support would be important to building a case for CHP? (Check all that apply)

- ☐ Grant/Funding
- ☐ Low interest loans
- ☐ Third party ownership
- ☐ Independent CHP Evaluation
- ☐ Case Study/Testimonial from other CHP
- ☐ Independent business case assessment
- ☐ Packaged CHP Systems *(that lower engineering/installation costs)*

Other (please specify)

Fuel Supply

SECTION IV: Final Thoughts

Are you interested in learning more about installing/upgrading CHP?

Are there other key people in your organization that would like more information?

Name:

Mailing Address:

Email:

Phone:

Preference for contact: email hard copy phone call

Do you have any comments?

Submit

. POR Test Cell Data Summary

INSTR. TAG NO.		SERVICE	MFR	I/O TYPE	SGNL TYPE	REMARKS
ANALOG INPUT - Vdc & mA-dc						
TY-	Z102A	Compr. #1 Exhaust Temperature Avg.	Alturdyne	A/I	0-100 mV-dc	0-1,500°F, 0-1 mA thru 100 ohms resistor, average of two TEs
TY-	Z102B	Compr. #2 Exhaust Temperature Avg.	Alturdyne	A/I	0-100 mV-dc	0-1,500°F, 0-1 mA thru 100 ohms resistor, average of two TEs
FT-	204	POR Air Feed Flow Meter	Sierra	A/I	1-5 Vdc	calibration: 1-18,000 pph air @350°F,45 psig
FT-	210	POR Air Vent Flow Meter	Sierra	A/I	1-5 Vdc	calibration: 0-4,140 pph air @400°F & 40 psig
PT-	213	Barometric Pressure	Bailey	A/I	1-5 Vdc	calibration.: 0-18 psia
PT-	300	POR Exit Pressure	Bailey	A/I	1-5 Vdc	calibration: 0-60 psig
TT-	308	POR Quenched Gas Control temperature	Apl	A/I	1-5 Vdc	calibration: 0-1500°F
PT-	S312A	Compr. #1 Discharge Stagn. Pres.	Alturdyne	A/I	1-5 Vdc	calibration: 0-100 psia
PT-	S312B	Compr. #2 Discharge Stagn. Pres.	Alturdyne	A/I	1-5 Vdc	calibration: 0-100 psia
PDT-	S320A	Compr. #1 Dischg Venturi Press-Dif.	Alturdyne	A/I	1-5 Vdc	calibration: 0-10 psid
PDT-	S320B	Compr. #2 Dischg Venturi Press-Dif.	Alturdyne	A/I	1-5 Vdc	calibration: 0-10 psid
FT-	401	NG Flow Meter	Magnetrol	A/I	1-5 Vdc	calibration: 0-1,656 pph
FT-	510	POR Process Steam Flow Meter	ABB	A/I	1-5 Vdc	calibration: 0-6,120 pph @ 65 psig sat'd
PT-	204	POR Air Feed Pressure	Sierra	A/I	4-20 mA	calibration: 0-264.7 psia
TT-	204	POR Air Feed Temperature	Sierra	A/I	4-20 mA	calibration: 0-500°F
PT-	210	POR Air Feed Pressure	Sierra	A/I	4-20 mA	calibration: 0-264.7 psia
TT-	210	POR Air Feed Temperature	Sierra	A/I	4-20 mA	calibration: 0-500°F
PT-	408	NG Flowing Pressure	Foxboro	A/I	4-20 mA	calibration: 0-100 psig
FT-	505	POR Cooling Steam Flow Meter	ABB	A/I	4-20 mA	calibration: 0-9,360 pph @ 65 psig sat'd
PT-	507	POR Cooling Steam Vent Pressure	Foxboro	A/I	4-20 mA	calibration: 0-100 psig
PT-	513	POR Process Steam Inlet Pressure	Bailey	A/I	4-20 mA	calibration: 0-100 psig
PDT-	301	POR Injector Delta-P	Foxboro	A/I	4-20 mA	calibration: 0-100" H_2O
FT-	507	POR Cooling Steam Vent Flow	ABB	A/I	4-20 mA	calibration: 0-100"w.c. (1200 pph steam @ 400 °F and 80 psig)
TT-	P313A	Air Intake Temperature, Compr #1	Alturdyne	A/I	4-20 mA	calibration: 0-120°F (Pwrd Output #2 from Siemens SLC)
TT-	P313B	Air Intake Temperature, Compr #2	Alturdyne	A/I	4-20 mA	calibration: 0-120°F (Pwrd Output #2 from Siemens SLC)
ANALOG INPUT - THERMOCOUPLES						
TE-	205	POR Air Feed Temperature	Watlow	A/I	mV	"K" type thermocouple

INSTR.				I/O	SGNL	
TAG NO.		**SERVICE**	**MFR**	**TYPE**	**TYPE**	**REMARKS**
TE-	305A	POR Exhaust Gas Outlet Temperature	Watlow	A/I	mV	"K" type thermocouple
TE-	306	POR Exhaust Gas Outlet Temperature	Watlow	A/I	mV	"K" type thermocouple
TE-	307A	POR Quenched Exhaust Gas Temp	Watlow	A/I	mV	"K" type thermocouple
TE-	309	POR Quenched Gas Temperature	Watlow	A/I	mV	"K" type thermocouple
TE-	317	POR Torch Chamber Temperature	Watlow	A/I	mV	"K" type thermocouple
TE-	408	NG Flowing t/c	Watlow	A/I	mV	"K" type thermocouple
TE-	503	Steam Supply temperature	Watlow	A/I	mV	"K" type thermocouple
TE-	507	POR Cooling Steam Vent Temperature	Watlow	A/I	mV	"K" type thermocouple
TE-	512	POR Process Steam Inlet Temperature	Watlow	A/I	mV	"K" type thermocouple
TE-	303A	Compr. #1 Dischg Temp.	Watlow	A/I	mV	"K" type thermocouple
TE-	303B	Compr. #2 Dischg Temp.	Watlow	A/I	mV	"K" type thermocouple
POR – THERMOCOUPLES						
TE-	320A	POR Rx Chamber Internal Gas Temperature	Watlow	A/I	mV	"K" type thermocouple
thru	320D					
TE-	331	POR Rx Chamber Metal Skin Temperature	Watlow	A/I	mV	"K" type thermocouple
thru	350					
TE-	351	POR Rx Chamber Outlet Metal Skin Temp.	Watlow	A/I	mV	"K" type thermocouple
thru	358					
TE-	359	POR Heat Shield Metal Skin Temperature	Watlow	A/I	mV	"K" type thermocouple
thru	364					
TE-	365	POR Pressure Case Metal Skin Temp.	Watlow	A/I	mV	"K" type thermocouple
thru	368					
TE-	369	POR Steam Chamber Top Metal Skin Temp.	Watlow	A/I	mV	"K" type thermocouple
TE-	370	POR Steam Chamber Top Metal Skin Temp.	Watlow	A/I	mV	"K" type thermocouple

Test Cell Process Control and Instrumentation

Control of the POR test cell adopted a centralized approach; one main panel houses the regulatory and discrete control hardware. Regulatory control is implemented through stand-alone microprocessor-based process controllers made by Siemens, their Model 353 (Figure 1). These industrial controllers provide defined logic and regulatory algorithms that give flexibility to create custom process control strategies. System control valves are equipped with motorized actuators which adjust valve position based on the controller 4-20 mA-dc output signal. Discrete or interlock control is performed through a dedicated programmable logic controller (PLC) made by Allen Bradley, a MicroLogix 1500 (Figure 2). This PLC has a modular platform, remote programming software and expandable I/O; 48 inputs and 40 outputs are utilized in management of the test cell operation.

Field instrumentation measuring pressure and differential pressure consists of electronic, 2-wire, 4-20 mA-dc transmitters. Flow meters for air and steam utilize vortex technology for accuracy and turndown; the natural gas flow meter employs a thermal mass technique for flow measurement. The majority of POR temperatures are measured by standard, type "K", chromel-alumel thermocouples. The experimental test cell is also equipped with a dedicated pc-based data acquisition system (DAS) utilizing National Instruments Field point hardware for the I/O interface. The DAS configuration includes 40 discrete inputs, 32 analog 4-20 mA-dc inputs and 56 thermocouple input channels.

Figure 28. POR Process Controller, Siemens Model 353

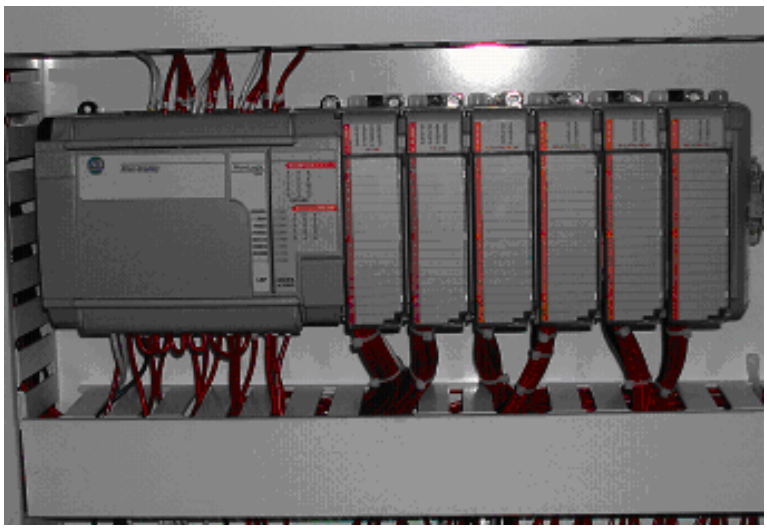

Figure 2. POR Test Cell Programmable Logic Controller, A-B Micrologix 1500

Test Cell Analytical Hardware

The POR exhaust gas is at an elevated pressure, up to 45 psig during operation. A gas sample is removed from the POR exit via a water-cooled sample probe and let down in pressure through a needle valve and routed through tubing constructed of stainless and Teflon into a sample conditioning train. The train consists of a cartridge filter for particulate removal and a

condensate trap followed by a membrane dryer for vapor removal. Composition of POR exhaust gas, a secondary product, is analyzed for oxygen, carbon monoxide, carbon dioxide, NO_x and total hydrocarbons by using continuous gas monitors as noted below.

- A Rosemount Analytical Model 775R paramagnetic oxygen analyzer
- A Thermo Environmental Instruments Model 42C chemiluminescence NOx analyzer
- A Rosemount Analytical Model 400A flame ionization total hydrocarbon analyzer
- Two Rosemount Analytical Model 880A infrared carbon monoxide analyzers (High and Low Range)
- A Rosemount Analytical Model 880A infrared carbon dioxide analyzer

Figure 29. POR Product Gas Analyzers on center and left racks; right rack contains POR pc-based DAS

In addition to the six gas analyzers, a micro gas chromatograph (GC) measures oxygen, carbon monoxide, carbon dioxide, hydrogen, and individual hydrocarbon constituents up to C_6. The unit is a Varian Micro GC CP-4900 (see Figure 4) and utilizes three different channels to analyze the gas mixture. Each module utilizes a thermal conductivity detector to determine the concentration of its set of gases in the sample. Channel 1 uses a 10M MOLSIEVE 5A heated module model CP740148 to detect hydrogen, oxygen, nitrogen, methane, and carbon monoxide. Channel 2 uses a 10M PORAPLOT Q heated module model CP740143 to detect carbon dioxide, ethane, and ethylene. Channel 3 uses a 4M CP-SIL 5 NAT heated module model CP740139 to detect all higher hydrocarbons up to C_6. All modules can detect each of the gases in the range of 1 ppm-100%.

Figure 4. Varian C-4900 Micro Gas Chromatograph

Test Data Measurement

Process variables measured in the test cell are collected and archived in a pc-based data acquisition system utilizing a 16-bit digital conversion I/O interface from National Instruments. Process variables are time stamped and stored in engineering units for processing in real time or later. An operator interface is provided thru process graphics linked to real time data from the DAS.

POR Fabrication Pictorial Review

POR Pressure Case:

The POR outer most chamber is the Pressure Case; it is a three piece bolted unit constructed of 316 stainless steel to provide structural integrity supporting POR operation up to pressures of 60 psia. The flat pressure dome at top is made from 0.80″ thick plate; the cylinder is rolled and welded from 0 .25″ plate and the bottom service cone machined from a casting. Injectors are hard mounted to prepared surfaces of the service cone.

Figure 1. Pressure Case Cylinder Section

Figure 2 Pressure Case with Flanges attached

Figure 3. Pressure Case Dome surface finish on jig (interior view)

Figure 4. Pressure Case Service Cone being machined

Steam Housing Components:

The Steam Housing is constructed of 316 SS sheet metal top and rolled cylindrical midsection, flanged and bolted to a converging cone. The steam housing cone was machined from a casting of Inconel 625 material. Welded to the converged end of the cone is an outlet tube section also made from Inconel 625.

Heat Shield Components:

The Heat Shield is constructed from Inconel 625 sheet metal; it has a flat top welded to rolled cylindrical midsection. The completed Heat Shield assembly includes a cone (not shown) that connects with the cylinder section through a sliding joint feature to allow for thermal growth of the metal. An insulation jacket covers the top and cylinder section of the Heat Shield for added flexibility in control of heat losses.

Figure 5. Steam Housing Cone joined with Outlet Tube

Figure 6 Heat Shield with Insulation Jacket

Figure 7. Heat Shield Top ready for Assembly with Insulation Cover

Reaction Chamber:

The Reaction Chamber is constructed from cobalt based alloy for its high temperature durability and strength. Reaction Chamber design uses a seal ring design at the Dome interface welded to a formed Cone. Sheet metal with 0.080″ thickness is rolled and welded to make the cylinder section. The cylinder is welded to a 14 segmented, faceted formed cone and the cone is welded to an outlet tube with drilled holes to introduce steam for dilution cooling of POR exhaust. The Reaction Chamber is centered and positioned laterally at the top and outlet end; grommet-retainer sets are used on all chamber penetrations, which allow freedom of the chamber to float vertically in the assembly and control metal stress build-up and expansion due to elevated POR operating temperatures up to 2,000° F.

Figure 8. Reaction Chamber Segmented Coned Machined with Retainers

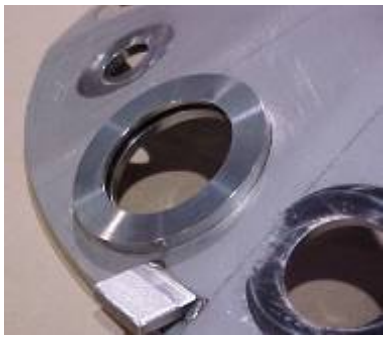

Figure 9 Close-up of Retainer and machined surface on Segmented Cone

Figure 10. Grommet and retainer sets and Steam Housing Outlet Tube machined ring

Figure 11 Final welding of Reaction Chamber Subassembly

POR Injector Components:

Injectors are constructed of 316 SS material. Air enters through slotted openings and mix with POR main fuel through orifices drilled in the body. Injectors are hard mounted to the service cone of the Pressure Case; the barrel section slips through grommets positioned in the cones of both Steam Housing and Reaction Chamber to enter inside the Reaction Chamber.

Figure 12. Assembled POR Injector Unit

Figure 13. Injector Air Intake Flow Passages

Figure 14. Injector Start Fuel Tube

Figure 15. Injector Inner Body and Main Fuel Orifices

Figure 16. Injector Back Plate

System Supply Manifolds and Interconnection Tubing:

Manifolds and Tubes are constructed from 316 SS tube; associated interconnection tubes for Cooling Steam, Process Steam, Start Gas and Main Fuel are shown.

Figure 30. Steam (Dilution and Process), Start Gas and Main Fuel Manifolds

POR Assembly Pictorial at MECO Inc.

Major subassemblies were partially constructed initially, beginning with components associated with the Reaction Chamber and followed with the Heat Shield and Steam Housing assemblies. Preparation work included the meticulous installation of 36, type “K”, chromel-alumel, metal skin thermocouples to the Reaction Chamber for temperature monitoring. The final assembly sequence was carried out by MECO with skill and precision. No major problems were encountered during placement, alignment and bolting of the different subassemblies as well as the different components such as the Injectors, Torch and Process Tubes. Figures 40 through Figure 67 show a pictorial of the assembly process.

Figure 18 Reaction Chamber metal skin thermocouples placement finished

Figure 19. Heat Shield placed and bolted to Reaction Chamber

Figure 20. Reaction Chamber thermocouples routed thru Heat Shield top insulation jacket

Figure 21. Steam Housing preassembled; secured to Pressure Dome Plate

Figure 22. Close up of grommet and retainer sets installed on Steam Housing Cone

Figure 23. Close-up of machined ring welded at exit of Steam Housing Outlet Tube

Figure 24 Steam Housing lowered over Reaction Chamber/Heat Shield unit and bolted to Steam Housing Cone

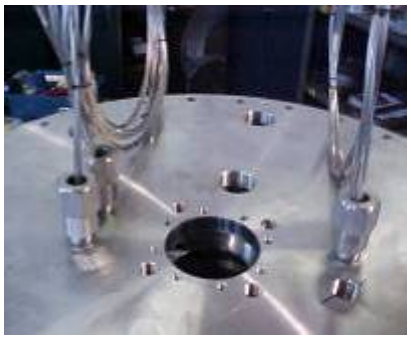

Figure 25. POR thermocouple sensor extending through sealing glands on Pressure Dome

Figure 26. Steam Housing, Heat Shield, Rx Chamber unit lowered into Pressure Case for final fit up

Figure 27.Process Manifolds placed and secured

Figure 31. Finished POR Assembly

Figure 29. View of Pressure Dome Plate with Process steam and Observation port

Thermodynamics Perspective on the High Efficiency of POGT Cycles

A POGT system, comprising an air compressor, a POR combustor, an expansion turbine and a HRSG generator using the sensible heat in the exhaust to produce steam for use in controlling the turbine inlet temperature, has an unusually high efficiency of power generation to net heat used in the POR, often well over 60 %. Such efficiency is higher than the most efficient gas turbine combined cycle in service, 60 %. How is this possible in light of the limits of the Second Law of Thermodynamics and the limits imposed by Carnot cycle efficiency?

The Second Law of Thermodynamics establishes an upper limit on the efficiency of the conversion of heat to power in a thermodynamic engine. A thermodynamic engine is a closed device, with no matter crossing its boundaries, whose only interactions with its surroundings are the transfer of heat in and out of the cycle and the accomplishment of work delivered to the outside of the engine. Conventional gas turbines operate on what is called the Air Standard cycle, in which the combustion process is replaced with heat transfer to the compressed air in the combustor, thereby enabling the assumption of a closed cycle to be met. The traditional thermodynamic assumption is that the exhaust, from an air standard cycle, is discharged into the atmosphere where the surrounding air cools the exhaust so that it can then flow back to the compressor inlet, thereby completing the, presumably closed, cycle. This assumption excludes the chemical change in the combustion gases, which is adequate for analysis of gas turbine cycles.

In a conventional gas turbine burning natural gas, essentially methane, CH4, the reaction consumes 1 mole of methane plus 2 moles of oxygen and produces 1 mole of CO2 plus 2 moles of H2O; 3 moles in and 3 moles out. In a POGT the reaction, at a S.R. of 0.25, the reaction consumes 1 mole of methane plus one-half mole of oxygen and produces 1 mole of CO plus 2 moles of H2; 1 ½ moles in and 3 moles out. Additionally there is no way that this volumetric increase can be reversed after eventual burnout and final exhaust. The increase in volume of the cycle working substance is basically different from an air standard cycle and, in a manner of significance, enables the POGT cycle to operate at unusually high efficiency. Both the conventional gas turbine cycle and the POGT obeys the First Law of Thermodynamics that energy is conserved, so that when each, individual process in these cycles is properly analyzed the result is correct. The unique aspect of a POGT is that in performing the chemical reaction something additional, beyond the chemical energy, is involved that affects the extent to which energy is converted to power.

Classical Thermodynamics* texts show that for isentropic, reversible (frictionless) and adiabatic (no heat transfer) processes, which well approximate the expansion process in a turbine, the change in enthalpy, which is the power delivered per unit of mass flow, is equal to the integral of the product of the specific volume and the pressure. The increased specific volume, an alternative expression of the lower gas density (due to the release of the hydrogen from the methane), results in more power being generated for the same pressure difference across the turbine than occurs when conventional combustion is used. The presence of the hydrogen in the gas also results in a considerably higher specific heat of the gas. The net result is that the

turbine, operating on the low density, hydrogen rich, gas generates more power for the same pressure ratio across the turbine than occurs when the same pressure difference is experienced by a turbine using gas from conventional combustion. The thermodynamic properties of the gas (the isentropic exponent), the pressure ratio across the turbine and the turbine inlet temperature determine the turbine exhaust temperature. With different gases flowing through the turbine the turbine exit temperature is different. With the high specific heat of partial oxidation gas and the actual temperature difference across the turbine the power developed in the turbine is correctly calculated in accordance with the First Law of Thermodynamics, namely that the energy books must balance.

*Keenan, J. H., Thermodynamics, Wiley, 1941, pg 102

In order to perform a strict analysis of what irreversibility has occurred in the combustion process one must analyze the chemical Availability at each stage in the engine to determine where the ability to perform work, which is the reason for the name of 'Availability', is lost. Availability is also known as Free Energy. Availability analyses are rarely done in power generation systems. The availability function includes an evaluation of both the enthalpy and entropy at state points. Availability is the enthalpy minus the product of the ambient temperature and the entropy. A chemical availability analysis is rarely done. One such analysis, referred to in Hatsopoulos and Keenan ** identifies the largest source of loss of availability as occurring during the combustion process. This analysis was published in 1936 in the Journal of the Society of Automotive Engineers*** for an Otto cycle (spark ignited, four-stroke gasoline fueled) engine; however the conclusion that combustion of ordinary hydrocarbon fuels at conventional temperatures involves a large loss in availability. In order to perform a Second Law analysis of a partial oxidation chemical reaction one would have to involve the entropy of all of the reactants and products using a common base entropy for all of the species present.

**Hatsopoulos, G. N., and Keenan, J.H. Principles of General Thermodynamics, Wiley, 1965, pg 740-742

*** Hershey, Eberhardt and Hottel, Thermodynamic Properties of the Working Fluids in Internal Combustion Engines, S. A. E. Journal, vol. 39, (1936) pp 409-424

There is one, well known, power generation system that is not limited to Carnot cycle, closed heat engine cycle, efficiency in the conversion of chemical energy to power, and must use an availability analysis to analyze its thermodynamic performance. This is the fuel cell. In a fuel cell, where hydrogen and oxygen react to form water and electrical power, as irreversibilities are reduced to a minimum (low current densities where resistance caused voltage drops decrease, approaching zero, like friction in a thermo-mechanical engine), the fuel cell voltage approaches the limit imposed by the availability change in the hydrogen-oxygen reaction.

A chemical availability analysis of the POGT cycle is beyond the scope of this R & D project.

It is to be noted here that the maximum academic efficiency of a recuperated gas turbine cycle of small pressure ratio would occur in a frictionless cycle, without unnecessary internal pressure drop and no unwanted heat transfer system, in which the heat addition in the primary

(external) heat exchanger was caused by combustion of the fuel at a temperature determined by a process in which the external combustion products transfers a small amount of heat to the cycle and uses the remainder of its heat to preheat the air and fuel which it burns. Such a heat transfer process would occur at a temperature in excess of the adiabatic flame temperature of the fuel. A Carnot cycle efficiency for such a cycle, with an academically high temperature from the conceptual heat addition heater, would be over 90 %. Such a cycle is academic for numerous reasons, principally the issue of finding practical materials to use at the high temperatures envisioned. It is this loss of the ability to convert the chemical energy in fuels, at the highest temperatures which the fuels are capable of producing, to heat engine heat input which is the source of the loss in availability in the fuel being burned at low, ordinary, temperatures.

POGT Gas Volumes (moles of chemical species)

Tracking moles of air, fuel gas and combustion products, before p & T changes accompanying combustion.

Air, MW = 28.97, 21% O_2 + 79 % N_2 (A included in N_2), 3.76 N_2/O_2

Basic Methane combustion

$CH_4 + 2O_2 = CO_2 + 2H_2O$ 3 moles in, 3 moles out, no change

Methane combustion in air

$CH_4 + 2O_2 + 7.52N_2 = CO + 2H_2O + 7.52N_2$ 10.52 moles in and out

Methane combustion in 300% theoretical air

$CH_4 + 6O_2 + 22.56N_2 = CO + 2H_2O + 4O_2 + 22.56N_2$ 29.56 m in, out

POGT

SR=0.25, minimum O_2 or else soot is inevitable

$CH_4 + 0.5O_2 = CO + 2H_2$, 1.5 moles becomes 3 moles

SR=0.25, Air combustion

$CH_4 + 0.5O_2 + 1.88N_2 = CO + 2H_2 + 1.88N_2$, 3.38 moles in 4.88 out

SR=0.40

$CH_4 + 0.8O_2 + 3.01N_2 = CO + 2H_2 + 3.01N_2$, 4.81moles in 6.01 out

Note: additional $0.3O_2$ makes a combination of CO to CO_2 & H_2 to H_2O

Note: Fuel gas (CH_4) does not have to be compressed (60 psia/45 psig)

Need steam injection to limit temperature of combustion products.

ASPEN 2800#steam (155.6 moles) & 6400# air (220.7 moles) 0.705 stm/air

SR=0.40, 1 mole CH4 + 3.81 moles air + 2.69 moles steam becomes 8.70 moles POR exit to expander.

Only air has to be compressed, CH4 delivered at pressure (50 psig), steam at pressure, and only 3.81 moles of air need to be compressed

8.70/3.81=2.283 moles of gas being expanded for 1 mole of air compressed!

POGT at SR = 0.4 produces 2.28 moles of gas compared to full combustion with 300% theoretical air. Basically after correcting (both cases) for pressure and temperature in the compressor and expansion turbine POGT produces 2.28 times the gas volume to the expander than does a conventional gas turbine. The POGT system requires an expansion turbine basically 2.28 times as large as the turbine for a conventional cycle due to increase in *vdp* power.

oject Idea

Title Markets and Business Case for Partial Oxidation Gas Turbine (POGT) for Clean Combined Heat and Power (CCHP)

OBJECTIVE

The objective of the proposed project is to co-fund a market and business case analysis of the Partial Oxidation Gas Turbine (POGT) technology for combined clean heat and power (CCHP) applications.

INDUSTRY NEED

In Project 2.C, the UTD co-funded technology development of POGT for CCHP application. Other sponsors include the California Energy Commission, the Sustaining Membership Program and Sempra Utilities. Laboratory-scale validation of co-production of electricity and steam using a 200kW turbine/generator converted to POGT and a 20 million BTU/hr boiler is on track to be completed by March 2008. Additional investment will be needed to support subsequent product development and demonstration of the technology. It is in the best interest of the UTD investors in POGT-CCHP that GTI collaborate with its commercialization partner(s) to utilize results from GTI laboratory testing and process modeling to conduct timely market and business case analysis for POGT/CCHP target applications. This information will be critical to convince commercial partners and other investors to continue support of the POGT/CCHP.

BACKGROUND

Following the *Path to Market* Stage/Gate process, the POGT/CCHP technology is completing Stage 3(Research Implementation) to pass through Gate 3 (Proof of Feasibility). It is time to work with prospective commercializing partner(s) to update the market assessment and prepare a detailed commercialization plan. Prospective commercial partners identified to date for the CCHP markets include Solar Turbines, Elliott Micro-turbines (recently acquired by Calnitex (http://www.calnetix.com/) and Alturdyne (http://www.alturdyne.com/index.html) GTI has been recently working to obtain evidence that prospective commercial partners have the willingness, financial means, and plan to commercialize this product. Following due diligence, GTI would obtain a binding commitment from commercialization partner(s) to proceed (written contract, license, and/or co-funding).

SOLUTION CONCEPT

The plan is to engage prospective commercial partners in the preparation of an update to date business case for POGT/CCHP. CEOs from Elliott and Alturdyne have or will soon provide commitment letters to support this work. Solar and Cleaver Brooks would also be approached. GTI has also begun discussions with principals at DE Solutions and Sentech who could assist, as needed, in this project.

BUSINESS VALUE

The business value to the sponsors includes the potential for increased market penetration of CCHP in their service areas. The POGT/CCHP technology offers a means for providing electricity and steam at an overall efficiency of 85% (higher heating value) with ultra-low emissions. The UTD NFP would benefit from the pro-rated share in licensing royalties that would be generated from commercial sales of POGT/CCHP

CONTACT

John M. Pratapas
Senior Engineer
847-768-0820r
John.pratapas@gastechnology.org