Arnold Schwarzenegger
Governor

FLEX-FLAME BURNER DEMONSTRATION

PIER FINAL PROJECT REPORT

Prepared For:
California Energy Commission
Public Interest Energy Research Program

Prepared By:
The Gas Technology Institute
Des Plaines, Illinois

November 2008
CEC-500-2008-090

Prepared By:
The Gas Technology Institute
Project Manager: Serguei Zelepouga, Ph.D.
Authors: Serguei Zelepouga, Ph.D., Martin Linck, Ph.D.
Des Plaines, IL, 60017
Commission Contract No.: 500-05-017

Prepared For:
Public Interest Energy Research (PIER)
California Energy Commission

Michael Lozano, P.E.
Contract Manager

Pramod Kulkarni
Program Area Lead
Industrial/Agricultural/Water End – Use Energy Efficiency

Martha Krebs, Ph.D.
PIER Director

Thom Kelly, Ph.D.
Deputy Director
ENERGY RESEARCH & DEVELOPMENT DIVISION

Melissa Jones
Executive Director

DISCLAIMER

This report was prepared as the result of work sponsored by the California Energy Commission. It does not necessarily represent the views of the Energy Commission, its employees or the State of California. The Energy Commission, the State of California, its employees, contractors and subcontractors make no warrant, express or implied, and assume no legal liability for the information in this report; nor does any party represent that the uses of this information will not infringe upon privately owned rights. This report has not been approved or disapproved by the California Energy Commission nor has the California Energy Commission passed upon the accuracy or adequacy of the information in this report.

Preface

The California Energy Commission's Public Interest Energy Research (PIER) Program supports public interest energy research and development that will help improve the quality of life in California by bringing environmentally safe, affordable, and reliable energy services and products to the marketplace.

The PIER Program conducts public interest research, development, and demonstration (RD&D) projects to benefit California.

The PIER Program strives to conduct the most promising public interest energy research by partnering with RD&D entities, including individuals, businesses, utilities, and public or private research institutions.

PIER funding efforts are focused on the following RD&D program areas:

- Buildings End-Use Energy Efficiency
- Energy Innovations Small Grants
- Energy-Related Environmental Research
- Energy Systems Integration
- Environmentally Preferred Advanced Generation
- Industrial/Agricultural/Water End-Use Energy Efficiency
- Renewable Energy Technologies
- Transportation

Flex-Flame Burner Demonstration is the final report for the Flex-Flame Burner Demonstration project (Contract Number 500-05-017) conducted by the Gas Technology Institute. The information from this project contributes to PIER's Industrial/Agricultural/Water End-Use Energy Efficiency Program.

For more information about the PIER Program, please visit the Energy Commission's website at www.energy.ca.gov/research/ or contact the Energy Commission at 916-654-4878.

Please cite this report as follows:

Zelepouga, Serguei and Martin Linck (The Gas Technology Institute). 2008. *Flex-Flame Burner Demonstration*. California Energy Commission, PIER Industrial/Agricultural/Water End-Use Energy Efficiency. CEC-500-2008-090.

Table of Contents

Preface i
Table of Contents iiii
Abstract vii
Executive Summary 1
1.0 Introduction 3
1.1. Background and Overview 3
1.2. Project Objectives 5
2.0 Project Approach or Methods 7
2.1. Task 1. (Ongoing) Project Management 7
2.2. Task 2. (Year 1) Flex-Flame Burner Retrofit System Design 7
2.3. Task 3. (Year 1) Field Site Preparation 7
2.4. Task 4. (Year 2) Flex-Flame System Testing 7
2.5. Task 5. (Year 2) Preparations for Commercialization 7
3.0 Project Outcomes or Results 9
3.1. Task 1. Project Management 9
3.2. Task 2. Flex-Flame Burner Retrofit System Design 9
3.3. Task 3. Field Site Preparation 15
3.4. Task 4. Flex-Flame System Testing 17
3.5. Task 5. Preparations for Commercialization 29
4.0 Conclusions and Recommendations 31
4.1. Conclusions 31
4.2. Commercialization Potential 31
4.3. Recommendations 31
4.4. Benefits to California 31
5.0 References 33
6.0 Glossary 35

List of Figures

Figure 1. Schematic of the Furnace at Thorock Metals 9

Figure 2. Overhead View of the Furnace at Thorock Metals 10

Figure 3. Original Combustion System 11

Figure 4a. Flex-Flame Combustion System as Installed With Two-Blower Capability 12

Figure 4b. Final Configuration of the Flex-Flame Combustion System, Re-engineered for Single-Blower Operation 12

Figure 5. Temperature, Flow Data Acquisition, and Flue Gas Analysis System 14

Figure 6. Furnace Temperature History, March 14-15, 2007 20

Figure 7. Production of Nitrous Oxides, in Pounds/Hour, March 14-15, 2007 21

Figure 8. Firing Rate, March 14-15, 2007 21

Figure 9. Comparison of NOx Production of Baseline Case and Flex-Flame Case 22

Figure 10. Damper Control Scheme Designed to Reduce Infiltration During Periods of "Low Fire" Operation. 23

Figure 11. Furnace Temperature Plot Taken With Motorized Damper in Place 27

Figure 12. Left Burner Firing Rate During Tests with Motorized Damper Installed. 27

Figure 13. O2 and CO2 Concentrations in Furnace Exhaust During Tests with Motorized Damper 28

Figure 14. NOx Production During Tests with Motorized Damper 28

List of Tables

Table 1. Bill of Materials for the Flex-Flame Burner System 16

Table 2. Bill of Materials for Combustion System Performance Monitoring 16

Table 3. Baseline Characteristics of the Furnace, Without the Flex-Flame Approach 19

Table 4. Data Showing Characteristics of Furnace Operating in Flex-Flame Mode 24

Table 5. Comparison of Baseline and Flex-Flame Furnace Characteristics 25

Abstract

This report presents work performed by the Gas Technology Institute and subcontractors Eclipse Combustion and Thorock Metals Company, during the period of February 2006 to June 2008 under California Energy Commission (Energy Commission) Contract 500-05-017.

The Gas Technology Institute and its commercial partners have developed a high-efficiency, low-dross combustion system that offers environmental and energy efficiency benefits at lower capital costs for the users of reverberatory furnaces in the secondary aluminum industry. This low-nitrogen oxide (NOx), low-carbon monoxide flex-flame system includes a specialized burner and a combustion control system. The flex-flame burner, developed and tested by the Gas Technology Institute, provides an innovative firing process in which the flame shape and velocity can be controlled. The burner produces a flame that keeps oxygen away from the melt surface by producing a fuel-rich zone near the surface of the melt in the furnace and a fuel-lean zone in the upper portion of the furnace. This type of control is particularly important to keep oxygen away from the melt surface and thus reduce dross formation.

This retrofit technology lowers gas emissions and may increase process efficiency by improving combustion characteristics. To increase the efficiency of aluminum recycling operations, it is desirable to reduce the production of dross as much as possible. The Flex-Flame approach has the potential to accomplish this directly by decreasing dross formation and therefore increasing aluminum yield from a gas-fired reverberatory furnace. Flex-flame burns cooler and does not melt aluminum faster. The work carried out in the course of this project has also demonstrated that NOx and carbon monoxide emissions can be reduced dramatically by application of the Flex-Flame approach.

This project was to develop a high-efficiency, low-dross combustion system and to demonstrate this advanced combustion system on an industrial reverberatory furnace. At the completion of this project, with the aid of a commercialization plan to be prepared and updated throughout the project, the technology will be ready for commercial application.

Keywords: Combustion, aluminum, nitrous oxides, carbon monoxide, efficiency, dross reduction, reverberatory furnace

Executive Summary

Introduction

All aluminum melting in California is secondary melting of scrap material. Secondary aluminum melting has a low thermodynamic efficiency of approximately 25 percent and is carried out most commonly in reverberatory furnaces fired with air and natural gas. Secondary aluminum remelting furnaces also produce high levels of nitrogen oxides (NOx) in the flames of the high momentum burners currently employed, and a significant amount of metal is lost to the formation of oxidized dross. More than 300,000 tons a year of secondary aluminum is produced annually in California. More efficient, cleaner melting is important to preserving this key industry in the state. To reduce emissions of nitrous oxides and slow the formation of oxidized slag in the melter, the Gas Technology Institute and other project partners developed a specialized burner system that creates a fuel-rich flame region near the surface of the molten aluminum and an oxygen-rich region higher in the furnace. This approach is referred to as *Flex-Flame* technology and can also reduce the amount of carbon monoxide formed in the furnace. The overall efficiency of the process can also be improved by the application of this technology.

Purpose

This report describes work carried out at an aluminum remelting facility in Southern California. This project has moved the Flex-Flame technology to commercial readiness. This aim was accomplished by designing a commercial prototype combustion system (burner and gas supply trains), demonstration testing of the commercial prototype combustion system, long-term validation, and preparation for commercial deployment.

Project Objectives

- Install Flex-Flame combustion system at a commercial aluminum remelting facility.
- Establish a baseline to document performance of traditional burner systems.
- Test and monitor the performance of the Flex-Flame combustion system.
- Compare and document the effect of Flex-Flame operation on the process characteristics, including:
    - Emissions of Nitrous Oxides
    - Emissions of Carbon Monoxide
    - Dross Formation
    - Thermal Efficiency
- Develop a technology transfer plan that will assist in commercialization of this technology.

Project Outcomes

- Flex-Flame technology reduces NOx emissions significantly.
- Flex-Flame technology reduces carbon monoxide emissions significantly.
- Dross formation measured; effect of Flex-Flame operation documented.
- Thermal Efficiency monitored; effect of Flex-Flame operation documented.

Conclusions

Flex-Flame technology has been shown viable in reducing emissions and may improve the process efficiency of aluminum remelting operations throughout California and elsewhere.

Recommendations

Based on the project testing, it is recommended that further work should be undertaken to proliferate advanced combustion technologies, particularly Flex-Flame combustion systems throughout the aluminum remelting industry in California.

Benefits to California

The project has directly reduced the emissions of the target furnace that was equipped with a Flex-Flame combustion system. This furnace is now capable of operating in a more sustainable mode, producing the same amount of aluminum with significant reductions in NOx and carbon monoxide emissions. This furnace previously emitted 0.33 pounds (lbs) of NOx and 0.36 lbs of carbon monoxide per ton of aluminum alloy produced. It now emits 0.2 lbs of NOx and 0.2 lbs of carbon monoxide per ton of aluminum alloy produced. This technology has the potential to significantly reduce harmful emissions in California if reproduced in other aluminum remelting facilities.

1.0 Introduction

1.1. Background and Overview

This report describes work carried out at an aluminum remelting facility in Southern California. In order to reduce emissions of nitrous oxides and slow the formation of oxidized slag in the melter, specialized burner components were installed, which create a fuel-rich flame region near the surface of the molten aluminum, and an oxygen-rich region higher in the furnace. This approach is referred to as Flex-Flame technology. In field trials carried out in the course of this work, this approach was shown to reduce emissions of nitrous oxides. Reductions in dross formation may also be realized by use of a flex-flame burner configuration, but this effect could not be observed clearly in the work described here. The Flex-Flame approach was not found to impact the fuel efficiency of the furnace in a negative way. The infiltration of air into the furnace was a serious problem, since it allowed more dross and more oxides of nitrogen to form than would have been the case otherwise. The furnace was not designed to be air-tight, and during certain periods of processing the oxygen level in the furnace rose to levels far higher than expected. This issue was addressed by the installation of a specialized damper control system on the furnace. Similar measures may be needed in order to address this type of problem on other furnaces when Flex-Flame technology is installed.

All aluminum melting in California is secondary melting of scrap material. Secondary aluminum melting has a low thermodynamic efficiency of approximately 25% and is carried out most commonly in reverberatory furnaces fired with air and natural gas. According to the United States (U.S.) Census Board and the California Air Resources Board (CARB), this industry produces significant levels of NOx, sulfur oxides (SOx), carbon monoxide (CO), and particulate matter (PM) emissions. Room for improvement exists in both the efficiency and the emissions from this industry.

The greatest benefits to California rate payers from this project are anticipated to be in reduced emissions of toxic exhaust gas components and lower production of solid dross (a mixture of aluminum oxides, salt, and aluminum by-products).

While changing furnaces used for secondary aluminum to more efficient melters would offer the largest potential for increased melting efficiency and lower emissions, this would incur some risk and significant expense for industry. It is also unclear what type of melter would be more efficient. At present, there is no clear alternative to traditional melters, and systems that could provide greater efficiency have not gained wide acceptance in the aluminum industry. A cost-effective way to approach these goals is to change the combustion system of existing furnaces to a new Flex-Flame burner designed and tested by the Gas Technology Institute (GTI) and Eclipse. The Flex-Flame combustion system is a retrofit to existing combustion equipment, and does not require the furnace to be modified extensively prior to installation. The Flex-Flame approach, described below, stages the high momentum flame used to remelt aluminum. Introduction of a portion of the air (secondary air) in an optimal manner lowers peak flame temperature and decreases the maximum melt surface hot spot. This leads to lower NOx emissions and may decrease dross formation during processing.

Aluminum melters are unique because the surface in the melt bath is highly reflective and radiant heat transfer is limited when melting aluminum. Usually, radiant heat transfer is the dominant mode of heat transfer in high-temperature furnaces. However, the reflectivity of aluminum is so great that radiative heat transfer is impaired, and convective heat transfer can play an important role. High-momentum burners, which maximize convective heat transfer from the flame to the surface of the melt, are commonly used in this industry. Secondary aluminum remelting furnaces produce high levels of NOx in the flames of the high momentum burners currently employed. The resultant fast flame produces high levels of thermal NOx. The Flex-Flame burner, demonstrated in the course of this project, minimizes NOx by staging combustion. A portion of the air required for complete combustion of the fuel is injected above the main flame. This creates fuel-rich (bottom of flame) and fuel-lean (top of flame) combustion zones. The maximum flame temperature is decreased as the flame zone is expanded, and NOx production is decreased accordingly. Depending on conditions, NOx decreases of 20 to 50% have been achieved (Soupos, et al., 2005). An important advantage of the flex-flame system is that high momentum heat transfer is maintained, meaning that heat can be transferred effectively into the bath of molten aluminum.

The Flex-Flame approach provides a further advantage, since it may also reduce oxidative losses of aluminum. When aluminum is remelted, depending on the alloy, a fraction of the aluminum is oxidized and lost as waste. This loss is mitigated in practice by covering the melt surface with a salt mixture. After melting, the salt and oxidized metal (mostly alumina) layer is removed and sent for disposal as dross. Aluminum losses can be 1 to 10%, and higher for a few alloys. The oxidation reaction is driven by temperature, residence time, and availability of oxygen and water vapor at the melt surface. The Flex-Flame approach may help reduce dross formation in two ways. First, the oxygen concentration above the melt is lowered and slows the oxidation reaction. More importantly, the staged combustion process spreads the flame hot spot on the melt bath surface. Rates of oxidation of aluminum melts are temperature dependent and increases in local temperature result in increased rates of oxidation. By lowering the temperature of hot spots on the surface of the melt, the rate of oxidation can be reduced significantly.

Over 300,000 tons a year of secondary aluminum is produced annually in California. More efficient, cleaner melting is an important means to preserve this key industry in the state. GTI has been developing the Flex-Flame technology with the U.S. Department of Energy and gas industry (including SoCalGas) support (Soupos, et al., 2005). During this work, background review has confirmed that no other commercial product or technology currently being developed parallels the Flex-Flame approach or achieves the same significant environmental savings.

Other approaches that provide large environmental savings require increased electricity use (electric melters) or higher natural gas use (nitrogen blanketing of the melt bath). Only the GTI flex-flame approach provides large environmental benefits as a straightforward retrofit that may pay for itself with reduced energy costs.

1.2. Project Objectives

The goal of this project is to demonstrate that the use of Flex-Flame burner systems has the potential to decrease emissions, lower dross formation, and to decrease fuel use (natural gas). Since electricity will not be directly saved, only the emissions and dross goals will be investigated. If all smelters were to employ the flex-flame approach the overall savings for California could be considerable. The goals for one burner are:

- A NOx reduction of 50%.
- A CO, CO2, SOx, and PM reductions of 10%.
- A dross reduction of 20%.

2.0 Project Approach or Methods

The project described in this report has moved the already-tested Flex-Flame technology to commercial readiness. This aim was accomplished by designing a commercial prototype combustion system (burner and gas supply trains), demonstration testing of the commercial prototype combustion system, long-term validation, and preparation for commercial deployment.

Operation of the flex-flame system places no new demands on the furnace operator. The air staging is built into the combustion system so the operator still sees only one overall air supply. The burner takes up the same space as existing burners and does not require significant reworking of the furnace or support equipment.

Work on this project was divided into five Tasks covering a 24-month period. One management task and four technical tasks were carried out.

2.1. Task 1. (Ongoing) Project Management

GTI was responsible for monitoring and coordinating all project-related activities, and for ensuring effective cooperation and communication between participants. GTI managed all activities and has provided all required reports and deliverables.

2.2. Task 2. (Year 1) Flex-Flame Burner Retrofit System Design

The commercial prototype flex-flame burner and combustion system were designed by GTI and fabricated by Eclipse. The design incorporated improvements to the first trial burner already evaluated but used the same flame staging approach that had been previously validated.

2.3. Task 3. (Year 1) Field Site Preparation

Engineers at GTI and Eclipse worked with California aluminum melters to select an optimum site for commercial prototype tests in Year 2 of the project. Thorock Metals Company of Compton, CA, was selected as the host site for this project.

2.4. Task 4. (Year 2) Flex-Flame System Testing

Eclipse Combustion, a partner on this project and a leading supplier of industrial combustion systems, oversaw installation of the Flex-Flame system on the demonstration furnace. GTI conducted a series of parametric and long-term tests to optimize operating conditions to confirm burner reliability; collect data on decreased emissions, lower energy use, and decreased dross formation. These test results are needed for marketing purposes, and will help establish Flex-Flame technology as a viable approach that can be readily applied to existing furnaces.

2.5. Task 5. (Year 2) Preparations for Commercialization

Eclipse, with GTI assistance, conducted market studies, prepared promotional literature for the Flex-Flame system, established a marketing approach, and developed production methods for

the Flex-Flame system. A full commercialization plan was developed and will be available for implementation following the conclusion of this project.

3.0 Project Outcomes or Results

The flex flame technology has been installed and tested at Thorock Metals, and results have been quite positive. The completion of the overall project objectives depended on the successful completion of each of the technical tasks, so the tasks will be discussed individually.

3.1. Task 1. Project Management

In pursuit of this project task, GTI was responsible for monitoring and coordinating all project-related activities and for ensuring effective cooperation and communication between participants. GTI managed all activities and has provided all required reports and deliverables.

3.2. Task 2. Flex-Flame Burner Retrofit System Design

The melter unit at Thorock Metals consists of a large, firebrick-lined chamber, with two natural-gas-fired burners mounted at one end. Loading doors are positioned in three of the walls, and a large main door, consisting of a sliding steel plate, is located on the end of the furnace opposite the burners. Aluminum scrap and large aluminum ingots are initially loaded into the furnace through one of the loading doors. As the metal melts, it forms a bath in the bottom of the furnace. Some of the molten aluminum flows out past the main door into a well. Scrap is then added to the well, where it melts as heat from the main bath in the furnace is transferred via conduction into the molten aluminum and solid scrap in the well. The composition of the aluminum in the well is measured regularly, and is adjusted via the addition of pure aluminum, scrap aluminum, and various alloying metals (such as copper). Once the desired quantity and composition of aluminum is reached, the molten metal from the furnace is poured onto a metal belt. Each link in the belt consists of a cast-iron mold. The aluminum alloy is poured into each mold, and then cools as it proceeds down the belt. When the ingots reach the far end of the belt, they are extracted manually from each mold, and are collected on pallets. The pallets of finished ingots are then shipped to customers. Schematics of the furnace at Thorock Metals are shown in Figures 1 and 2.

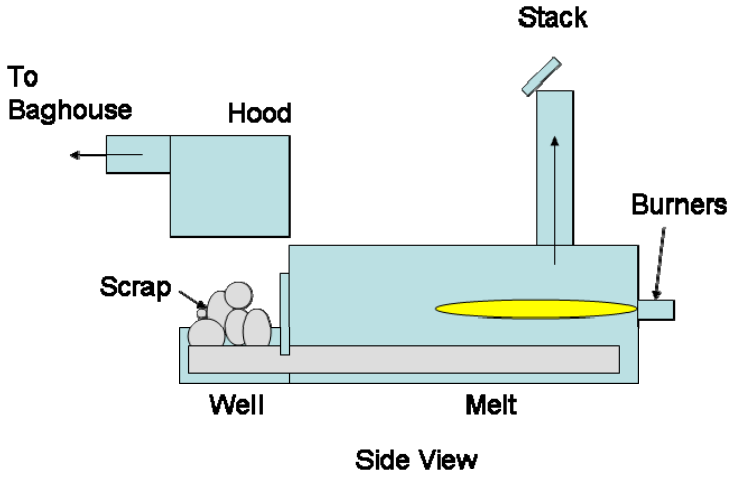

Figure 1. Schematic of the Furnace at Thorock Metals

Source: Gas Technology Institute, 2008

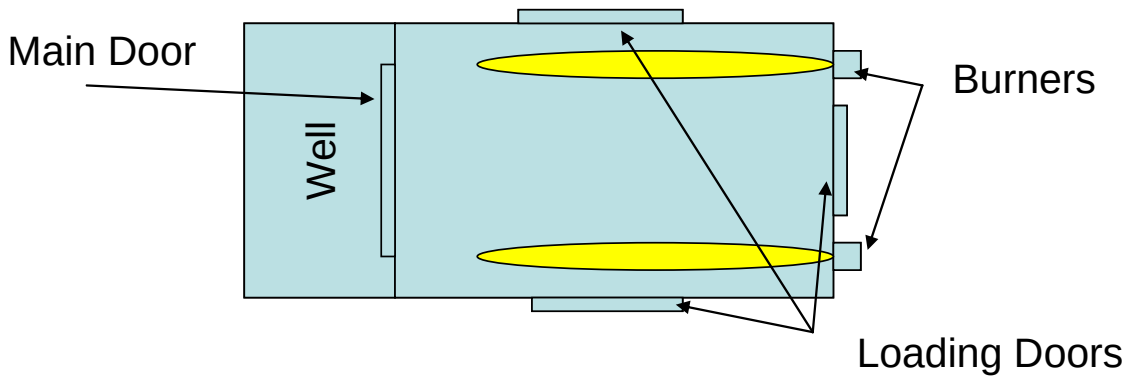

Figure 2. Overhead View of the Furnace at Thorock Metals
Source: Gas Technology Institute, 2008

The furnaces at Thorock are operated 24 hours a day, six days a week. While Thorock has two furnaces, only one is generally in use at any given time. The burners on the furnace that was modified in the course of this project can fire in "low fire" mode or "high fire" mode. At "high fire," each burner is fired at approximately 4.5 million BTU/hr; at "low fire," each burner is fired at approximately 0.5 million BTU/hr. High-fire mode is usually continuous until the furnace has stabilized at the desired operating temperature, and the burners then alternate between low and high-fire modes to maintain the temperature at the desired setpoint. It was noticed, however, that the furnace operators routinely alter the setpoint when needed in order to provide more or less heat to the process as a particular run proceeds.

The exhaust gases from the burners in the furnace are vented up through a stack, positioned on top of the furnace (see Figure 1). A fume hood is positioned over the well, which is designed to capture smoke and particulates produced when scrap is loaded into the well. This gas is drawn through a duct, across a yard adjacent to the furnace, into a baghouse, which traps particles and fines from the hood. An induction fan in the baghouse provides the vacuum needed to draw the gas through the duct from the furnace.

A mechanical damper at the top of the stack can be used to control the flowrate of exhaust gases out of the furnace. The furnace is not sealed, and exhaust gases can escape from a variety of points on the furnace (other than the stack) when the pressure inside the furnace is higher than atmospheric pressure. On the other hand, if the pressure in the furnace is lower than atmospheric, air can infiltrate into the furnace.

For the purposes of this project, the pressure in the furnace would ideally be slightly above atmospheric pressure at all times. In this way, the infiltration of air and oxygen into the furnace could be minimized, and the composition of the atmosphere could be controlled in order to minimize NOx formation and oxidation of the aluminum in the melt. When the furnace was operating under "low fire" conditions the movement of hot, buoyant exhaust gas up the stack was found to create a slightly sub-atmospheric pressure in the furnace part of the time and

secondary modifications to the furnace, particularly the damper, had to be undertaken in order to address this issue.

3.2.1. Original Combustion System Design

A PID showing the combustion system strategy in use at Thorock Metals prior to the beginning of this project is shown in Figure 3 below. The furnace was designed to supply approximately 10 million BTU per hour (MMBTU/hr) when fired at "high fire." Each of the two burners was designed to be fired at a maximum of 5 MMBTU/hr. The burners could also be fired in "low fire" mode, which provided a total of approximately 1 MMBTU/hr of heat to the furnace.

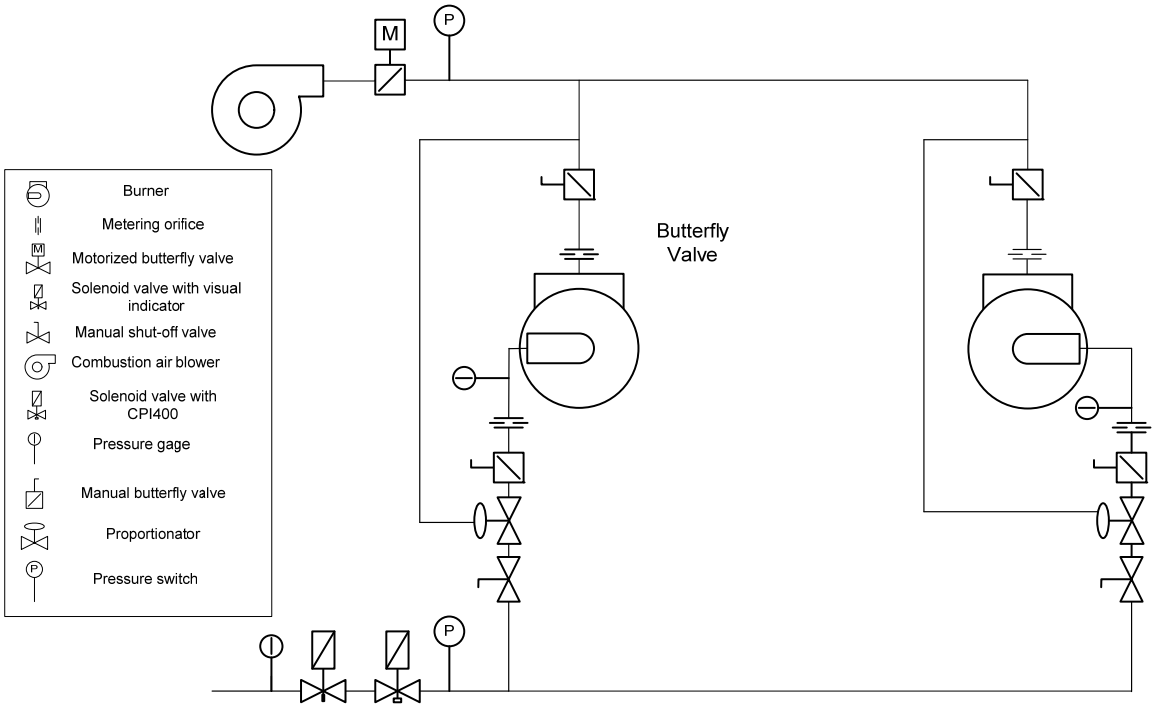

Figure 3. Original Combustion System
Source: Gas Technology Institute, 2008

This control strategy was straightforward and allowed for the metering and controlling of the fuel gas and combustion air to each burner individually. The controlling of the fuel gas was done via proportionators (or ratio regulators) that adjusted the flow of fuel gas based on the flow of the combustion air. The combustion system allowed for the burners to operate either on high fire or low fire using the furnace interior temperature as the control parameter.

3.2.2. Flex-Flame Combustion System

The Flex-Flame burner minimizes NOx and solid dross waste by staging combustion. A portion of the air is injected above the main flame as is shown in the figure below. In order to provide the capability for injecting secondary air, GTI developed a preliminary design for a revised combustion system. The initial configuration of the Flex-Flame combustion system installed at Thorock Metals is shown in Figure 4 a below.

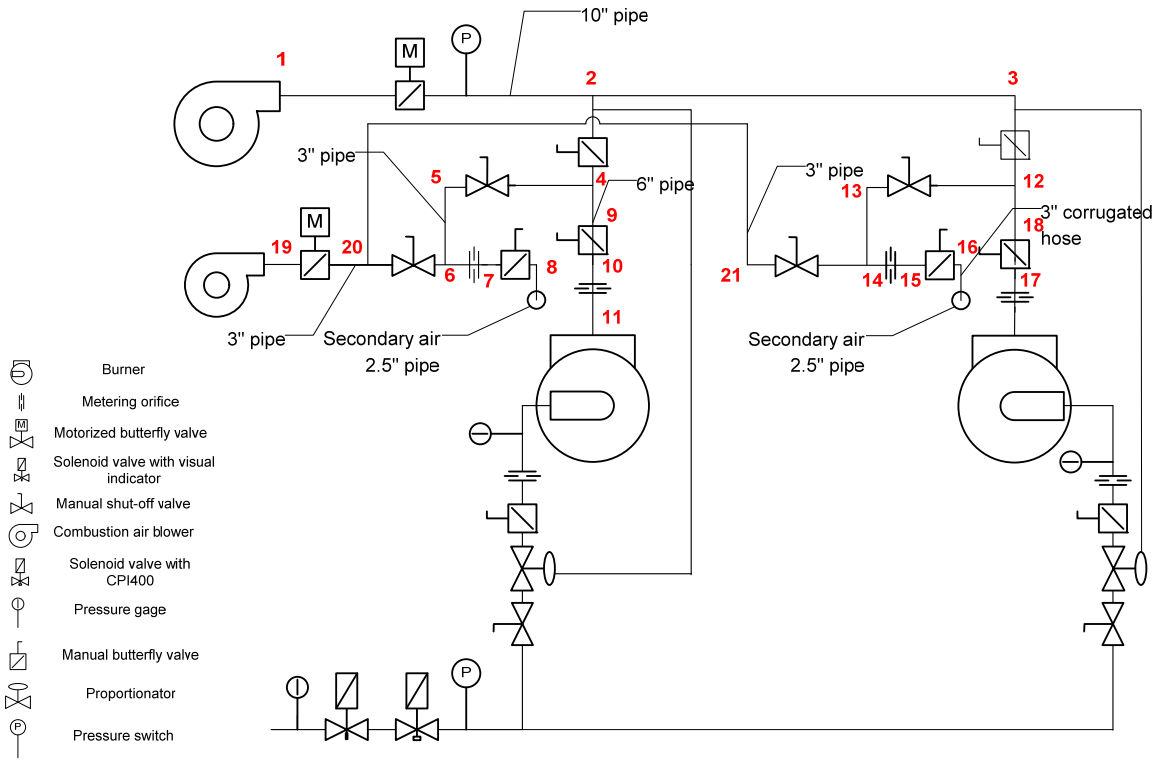

Figure 4 a. Flex Flame Combustion System as Installed With Two-Blower Capability

Source: Gas Technology Institute, 2008

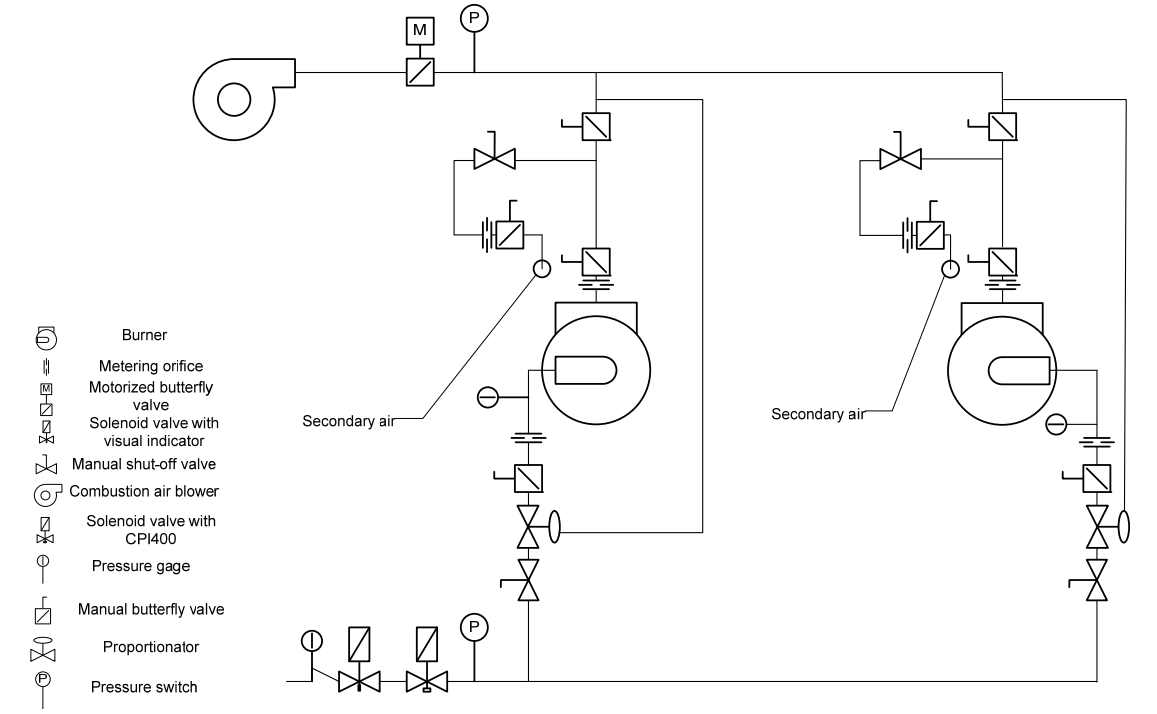

Figure 4 b. Final Configuration of the Flex Flame Combustion System, Re-engineered for Single-Blower Operation

Source: Gas Technology Institute, 2008

This configuration allows for the metering and controlling of natural gas and combustion air to both burners and secondary air lances. The delivery of the secondary air stream through the lances can be done in two ways; by using the main (larger size in the figure) combustion air blower, or by using the high pressure (smaller size in the figure) blower. With the first approach, the main combustion air will be split into two streams for each burner and a certain percentage of the air stream will be injected into the furnace through the secondary air lance. As Figure 4 a) shows, the secondary air stream is delivered via junctions 1-2-4-5-6-7-8 into the furnace for the left burner and via junctions 1-2-3-12-13-14-15-16 for the right burner. With the second approach, the main combustion blower will be responsible for supplying air only to the burners, whereas the secondary air will be supplied by the high pressure blower via junctions 19-20-6-7-8 for the left lance, and junctions 19-20-21-14-15-16 for the right lance. The flow rate of the fuel gas can still be regulated by the proportionators. Based on the selected equipment shown in Figure 4 a), pressure drop calculations were performed. It was estimated that at the given operating conditions (15% excess air, 10 MM Btu/hr total firing rate), it would be possible to inject up to approximately 32% of the combustion air as secondary air using the one blower approach. If it became necessary to stage the flame deeper or achieve higher injection velocity, the high pressure blower could be used. In order to ensure that adequate amounts of secondary air were provided during the first rounds of testing the two-blower approach was employed. In later tests, the single-blower mode was shown to produce acceptable results, with no need for the second blower.

During preliminary tests conducted under the previous U.S. Department of Energy funded project, the system was not designed for secondary air injection higher than 22%. The pressure drop and flow capacity calculations conducted under the current project showed that it would be possible to utilize the piping, burners, blowers and most of the components of the air/gas delivery system used in the preliminary experiments under the DOE project. Nevertheless, some of the valves and metering orifices had to be replaced with alternative components that would incur a lower pressure drop to ensure that the needed amount of air could be transferred through the secondary air lines. The diameter of the air lances also had to be increased from 1.5" to 2.5".

Ultimately, the system was reconfigured in order to operate with only one blower (single-blower mode). This configuration is shown in Figure 4 b). This approach required a lower initial investment, and entailed a lower degree of overall complexity. The work described below, shows that the system can operate satisfactorily in either single- or double-blower mode.

3.2.3. Design of Temperature, Flow Data Acquisition, and Flue Gas Analysis System

Initally, Thorock Metals combustion process monitoring was limited to temperature measurements at two locations; near the furnace crown and inside of the roof refractory. Therefore, the temperature, flow data acquisition and flue gas analysis system had to be developed from scratch.

A schematic of the proposed experimental set-up of the furnace and associated equipment is shown in Figure 5 below.

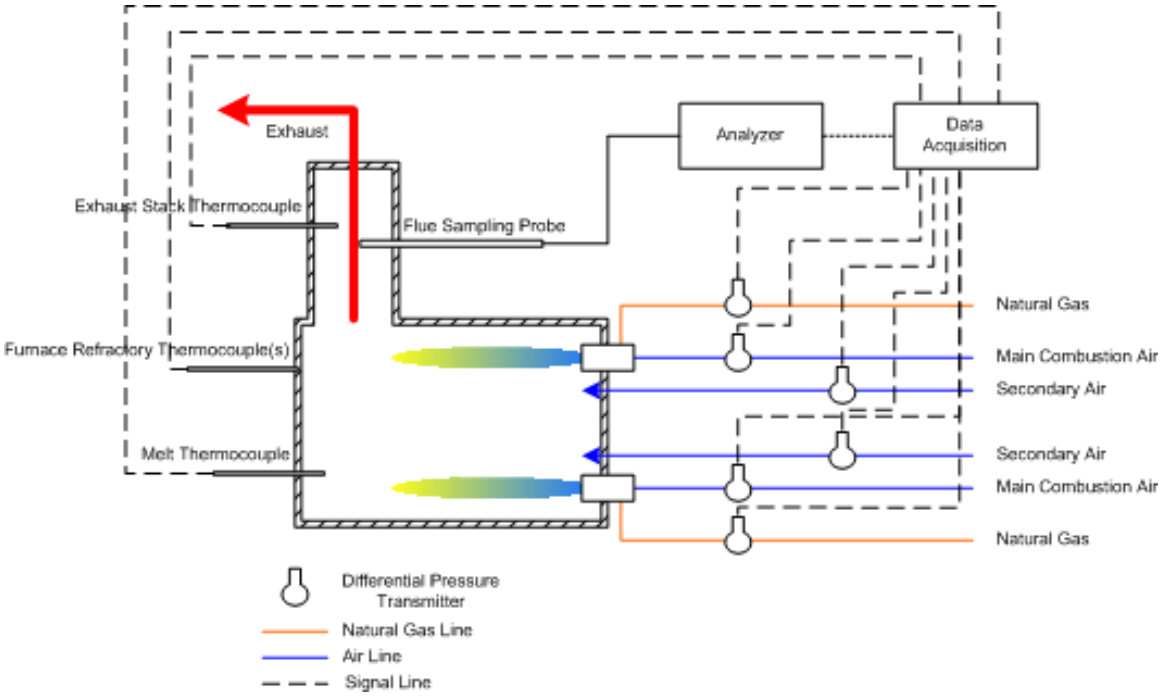

Figure 5. Temperature, Flow Data Acquisition, and Flue Gas Analysis System

Source: Gas Technology Institute, 2008]

The volumetric flow rate of each stream was monitored and recorded to ensure that the proper flows of combustion air entered the burners and the correct percentage of secondary air was injected into the furnace through the lances. In addition to the refractory thermocouples currently used for control and safety feedback, additional units were installed to monitor temperatures of the aluminum melt and the exhaust stack to examine the effect of the flex-flame burner system on the heat transfer to the load and heat losses. Lastly, flue gas emission sampling from the stack was monitored and recorded to examine the effect of Flex-Flame operation on NOx, CO, CO2, and O2. All this information was logged electronically on a portable computer.

The new system schematics, along with needed calculations, descriptions and explanations, were sent to Eclipse Combustion for review.

Based on GTI's discussions with Eclipse Combustion, the proposed combustion system met industrially accepted techniques for burner control and operation for this type of application. The following modifications were proposed by Eclipse to be incorporated in the control strategy shown in Figure 4.

- Install automatic butterfly valve directly downstream of the secondary blower to control the air flow based on secondary air demand. This valve would be placed between junctions 19 and 20 as shown in Figure 4.

- Replace 1.5″ OD secondary air injection lances with 2.5″ OD injection lances. This modification would reduce the pressure needed to inject secondary air into the furnace chamber and higher flows could be achieved.
- Remove manual ball valves currently installed between junctions 2-4, and 3-12. These valves are not shown in Figure 4. The original purpose of the valves was to balance the air flow between the two burners. However, during the field test of the Flex-Flame system under the previous DOE project, it was found that these valves served no purpose and the system was balanced when the valves were fully open.
- Control the two motorized butterfly valves directly downstream of each blower. This modification would assure that the selected air to fuel ratio could be maintained at different secondary air percentages.

In addition to these proposed changes, Eclipse also reviewed the pressure drop calculations that GTI performed on the control system included in the system design report. Eclipse agreed with GTI's finding that the maximum expected amount of secondary air injection under the proposed configuration could exceed 30% of the total combustion air.

The proposed control system for the Flex-Flame System was supplied to Thorock Metals management for review. The design was approved and implemented. An outline of the needed hardware, gas analysis equipment, installation activities and installation cost was included in the submitted system design report in detail. The retrofit system design report was submitted on March 29, 2006.

3.3. Task 3. Field Site Preparation

A field test agreement was submitted to project partners, and was signed, allowing work in preparation for a field test to proceed.

3.3.1. Flex-Flame Burner System Bill of Materials

The bill of materials shown in Table 1 is a list of all equipment in the combustion control system needed to operate the Flex-Flame burner system. The items marked "part of the existing system" correspond to equipment used in the combustion system control strategy in Figure 3. The remaining items were either procured under DOE funding for the prior project or will be purchased under the current project.

Table 1. Bill of Materials for the Flex-Flame Burner System

Item	Qty	MFG.	Part #	Description	Price	Provided by:	Total Price
				Burner system			
1	2	Eclipse	TJ500M	ThermJet 500 Medium Velocity Burner. Block & Holder	$ 2,352.00	Part of existing combustion system	$ 4,704.00
2	2	PCI	PC-IIWRA	UV Scanner with 90 deg. Angle Liquid Tite Connector	$ 111.25	Part of existing combustion system	$ 222.50
3	2	PCI	HSAMQL	Heat Seal Assembly with Magnified Lens	$ 83.20	Part of existing combustion system	$ 166.40
4	2	Dongan	A06-SA6	Ignition Transformer	$ 48.90	Part of existing combustion system	$ 97.80
5	2	Rajah	Rajah 90	Igniter Insulator	$ 2.05	Part of existing combustion system	$ 4.10
6	20	West	SL500	Ignition Wire (Price per foot)	$ 2.00	Part of existing combustion system	$ 40.00
				Gas train			
7	1	Eclipse	20163	1-1/4" NO Vent Valve	$ 327.08	Part of existing combustion system	$ 327.08
8	1	KDI	46040-12	3" Fast Opening Fast Closing Safety Valve	$ 594.50	Part of existing combustion system	$ 594.50
9	1	KDI	46030-12	3" Slow Opening Fast Closing Safety Valve	$ 691.88	Part of existing combustion system	$ 691.88
10	1	KDI	D224253	CPI 400 Safety Valve Interlock Switch	$ 62.50	Part of existing combustion system	$ 62.50
11	1	KDI	46000-6	Visual Indicator for Gas Safety Valve	$ 11.75	Part of existing combustion system	$ 11.75
12	2	KDI	D229611	FRG 715/6 Gas Proportionating Valve 1-1/2" npt	$ 435.00	Part of existing combustion system	$ 870.00
13	2	KDI	D225256	Low Fire By-Pass Trim valve for FRG	$ 55.78	Part of existing combustion system	$ 111.56
14	1	Eclipse		2"NPT reducing regulator	$ 395.00	Part of existing combustion system	$ 395.00
15	1	Antunes	RHLGP-A	High Low Gas Pressure Switch 2-14" / 10-50" wc	$ 133.00	Part of existing combustion system	$ 133.00
16	1	Eclipse	11M175	Rotary Gas Meter	$ 3,705.00	Part of existing combustion system	$ 3,705.00
17	2	KDI	D240895	2" Ball Valve	$ 46.86	Part of existing combustion system	$ 93.72
18	3	Ash	13817	0 to 60" wc Pressure Gauge	$ 96.00	Part of existing combustion system	$ 288.00
19	2	Eclipse	501219	2" Manual Gas Butterfly Valve	$ 93.17	Part of existing combustion system	$ 186.34
				Air train			
20	1	Antunes	JD-2G	Air Pressure Switch	$ 55.00	Part of existing combustion system	$ 55.00
21	4	Eclipse	500690	6" Manual Air Butterfly Valve	$ 507.19	Part of existing combustion system	$ 2,028.76
22	1	KDI	EMP-454-1	Actuator 220 In/Lb Torque	$ 350.00	Part of existing combustion system	$ 350.00
23	1	NYB	2010A15FA	Combustion Blower 2200 cfm at 30"wc. 15HP TEFC	$ 2,775.00	Part of existing combustion system	$ 2,775.00
24	1	PDC	091-000-002	10" Automatic Air Butterfly Valve	$ 610.00	Part of existing combustion system	$ 610.00
				Secondary air system			
25	2	Eclipse		3" shut off BV	$ 255.95	Available from Previous DOE Project	$ 511.90
26	1	Lamson	3108	Model 3108 AB belt drive air blower, with 25 HP	$ 11,125.00	Available from Previous DOE Project	$ 11,125.00
27	2	Eclipse		3" Manual Air Butterfly Valve	$ 400.00	To be purchased under current project	$ 800.00
28	2	Eclipse		3" Metering orifices	$ 100.00	To be purchased under current project	$ 200.00
29	1	PDC		3" Automatic Air Butterfly Valve	$ 500.00	To be purchased under current project	$ 500.00
30	1	TBD		Misc. piping and installation	$ 3,500.00	To be purchased under current project	$ 3,500.00
				Controls			
31	1	Wirth	UL-CP	Control Panel to Interface with existing temperature controller and high limit; existing PCI Flame Safety add weekend temperature controller DC23EBE00A1000 with day/night or weekend switch, alarm horn and silencer, indication lights and breaker.	$ 2,775.00	Part of existing combustion system	$ 2,775.00
32	1	PCI		Burner Flame Safety Module	$ 925.75	Part of existing combustion system	$ 925.75
33	1	Honeywell	UDC 2300	Temperature Controller	$ 420.00	Part of existing combustion system	$ 420.00
34	2	Honeywell	UDC 2300	High Temp. Limit Controller	$ 435.00	Part of existing combustion system	$ 870.00
35	1	Dongan		Misc. Fuses and motor start	$ 602.00	Part of existing combustion system	$ 602.00

Source: Gas Technology Institute, 2008

3.3.2. Combustion System Performance Monitoring Set-Up Bill of Materials

Table 2 below is a list of items needed for performance monitoring of the combustion system at Thorock Metals as described in the section above. The items marked "provided by GTI" are at no cost to the project.

Table 2. Bill of Materials for Combustion System Performance Monitoring

Item	Qty	MFG.	Part #	Description	Price	Provided by:	Total Price
1	1	HORIBA	PG-250A	Portable Gas Analyzer for CO, CO2, O2, NOx and SOx	$25,000.00	GTI	$25,000.00
2	6	ABB	2600T	Differential Pressure Transmitter	$ 4,000.00	GTI	$24,000.00
3	3	NI	P110AI/TC120/160	National Instruments Field Point Modules for Analog Inputs (Temperature, Flow)	$ 900.00	To be purchased under current project	$ 2,700.00
4	1	DELL	D-505	Laptop Computer for Data Acquisition	$ 3,000.00	GTI	$ 3,000.00
5	1	Accutru Int.	Custom	Custom Thermocouple for Aluminum Melt Temperature	$ 2,000.00	To be purchased under current project	$ 2,000.00
6	1	Omega	Type K	Assorted Thermocouples and Wiring	$ 1,500.00	To be purchased under current project	$ 1,500.00
7	1	Parker		Assorted Tubing and Fittings for Emission Analysis	$ 800.00	To be purchased under current project	$ 800.00
8	1	AMF	Custom	Flue Gas Sampling and Conditioning System	$ 1,000.00	To be purchased under current project	$ 1,000.00
9	1	Matheson	Custom	Calibration and purging Gas Cylinders for Gas Analyses	$ 5,000.00	To be purchased under current project	$ 5,000.00
10	1	TBD		Equipment Trailer rent $300 months for 12 months	$ 3,600.00	To be purchased under current project	$ 3,600.00

Source: Gas Technology Institute, 2008

Work on site preparation at Thorock Metals began in June 2006. The majority of the experimental equipment was shipped in June and received by Thorock Metals. Necessary equipment included a trailer, the analyzer, calibration gases, tubing, etc. The development of the flow and gas analysis acquisition software was completed. The test plan was submitted to the sponsors, and was approved.

In July 2006, the purchase order for the installation and the hardware of the Flex-Flame system was issued to PIS, and a down payment was made. All the remaining experimental equipment (thermocouples, flow data acquisition hardware, span gases, etc.) was shipped and received by Thorock Metals Corporation (TMC). A GTI engineer visited the field test site and finalized the field test arrangements with the management of TMC. As a result of this trip, TMC shut down the target reverberatory furnace to allow for adequate cooling in preparation for the hardware installation and necessary refractory refurbishing. There was a two week lead time in procuring the needed valves and metering orifices from Eclipse for the system retrofit. This lead time implied that the Flex-Flame system installation would commence on the week of August 21st. The work needed to complete the installation was estimated to take one week. Therefore, it was expected that the Flex-Flame system installation would be completed by the end of August 2006. In fact, the system was completely installed in early September 2006.

The GTI project team visited TMC on the week of September 11th. During this visit, the data acquisition system was installed and set up, and an equipment check was performed that revealed that all hardware was operating as expected. The Flex-Flame System retrofit had been completed and was inspected by GTI. A shakedown of the secondary air system was conducted, and a meeting with the Energy Commission Contract Manager was scheduled for October 12th to take place on-site at TMC. At this point, the site preparation task of the project was essentially complete.

3.4. Task 4. Flex-Flame System Testing

Work carried out in the course of the system testing task of this project involved GTI personnel, and required that site visits be made to Thorock, where the system was operated and monitored. Preliminary testing occurred from October 17 to October 19, 2006. Preliminary testing of the secondary air system revealed that the maximum secondary air flow capacity is approximately 35% of the total combustion air when the high pressure blower is used. This is actually slightly higher than had been estimated earlier, and meant that the validity of the Flex-Flame approach could be demonstrated clearly. The flow metering equipment was calibrated and connected to the data acquisition system without problems.

Preliminary testing of the combustion system revealed that the overall air to fuel ratio remained unchanged while in “secondary air mode”. This meant that the Flex-Flame combustion system was capable of creating a hybrid flame with a fuel rich region in the bottom section of the flame structure without negatively affecting the overall stoichiometry. All aspects of the data acquisition system operated without problems during operation of the furnace.

Baseline Testing occurred from October 30 to November 2, 2006. The GTI project team visited Thorock Metals and monitored emissions, relevant temperatures (melt, exhaust and flue gas), and dross formation during normal furnace operation without the use of secondary air. This test was intended to capture the amount of dross and NOx formation occurring during nominal operation to use as baseline for comparison with subsequent “Flex-Flame Mode” operation. However, dross collection by TMC had not been arranged yet at this point in the project, and data obtained could only describe the operation of the furnace itself. The data collected during

this baseline test helped tune the furnace, but it was later noted that excessive amounts of carbon monoxide were often produced in the furnace. The combustion system performance was within the specifications while in "high fire" mode. The air to fuel ratio was maintained at 10-15% excess air, producing low CO and NOx concentrations (around 45- 60 PPM). While monitoring the air/fuel ratio it was noticed that on several occasions during furnace modulation and during the transition from "high fire" to "low fire" the proper air to fuel ratio was not being maintained. The fuel flow was not reduced as expected at these firing conditions. Post trip data analyses confirmed these concerns. The flue gas analyses showed strong (detector saturation at 5000 PPM) and frequent increases in CO emissions. This problem is rather common and can be readily addressed. GTI made plans with Eclipse representatives to visit TMC in early December 2006 to make the necessary adjustments to the air/fuel ratio controllers and/or any other aspect of the combustion system if needed.

Further work was needed to provide a proper baseline, with a properly functioning burner control system. A second trip to fix the burner control system and continue baseline testing was scheduled to take place in early December 2006. GTI estimated that several days of baseline testing would be sufficient to capture flue gas emissions. Dross collection would continue for a month (approximately 30 work cycles) and would be carried out entirely by Thorock Metals personnel.

GTI and Eclipse representative visited TMC during the week of December 11, 2006 and implemented the necessary modifications and adjustments to the combustion control system. The left air/fuel ratio controller was replaced and the impulse lines' air inlets were relocated closer to burners to ensure the proper air pressure feedback. The second round of the baseline testing was conducted. The results confirmed that the fuel flow control problem had been eliminated.

The third and final round of the baseline testing was completed in January 2007. The flue gas composition was recorded continuously for eight production cycles. The total masses of CO2, NOx, and CO were calculated by integrating the concentration profile of each emitted gas over 24-hour production cycles. The total amounts of dross and aluminum produced were assessed via direct weighing of the raw material (scrap and additives), produced aluminum and dross. On the basis of this information, a baseline for the performance of the furnace, operating in the traditional manner (without the Flex-Flame approach), could now be established. Since data from January 2007, was better than that obtained from the previous attempts to observe the baseline performance of the system, data from four 24-hour periods in January was used to establish the baseline. The baseline characteristics of the furnace are shown in Table 3.

Table 3. Baseline Characteristics of the Furnace, Without the Flex-Flame Approach

Furnace Operating in Baseline Mode									
Date	Alloy type	Dross (lb)	Dross (%)	Ingot Production (lb)	Energy (MMBtu)	Power (MMBtu/hr average)	CO2 total (lb)	NOx total (lb)	CO total (lb)
1/15/2007-1/16/2007	384	7086	10.65%	57365	146.3	5.8	17113	13.7	42.5
1/16/2007-1/17/2008	384	7716	9.64%	70062	132.9	6.1	15545	10.9	1.7
1/17/2007-1/18/2008	380	6048	7.45%	72562	130.2	5.5	15230	9.9	1.5
1/18/2007-1/19/2008	380	7830	9.54%	71403	136.2	5.7	15931	11.3	3.9

Source: Gas Technology Institute, 2008

Testing of the Flex-Flame technology began at Thorock Metals, March 12-16, 2007. In this series of tests, and in all subsequent tests, the amount of air injected as secondary air was maximized. As discussed above, the system configuration in Figure 4 allows for the metering and controlling of natural gas to both burners and the controlling and metering of combustion air to both burners and secondary air lances. The delivery of the secondary air stream through the lance was done by using the high pressure (smaller size in the figure) blower. The main combustion blower was responsible for supplying air only to the burners, whereas the secondary air was supplied by the high pressure blower via junctions 19-20-6-7-8 for the left lance, and junctions 19-20-21-14-15-16 for the right lance. The proportionators were adjusted accordingly to maintain 5% – 15% excess air in the furnace.

The flue gas composition was recorded continuously for two production cycles. The total masses of CO2, NOx, and CO were calculated by integrating the concentration profile of each emitted gas over a 24-hour cycle. The dross and aluminum productions were assessed as soon as data from the direct weighing of the raw material (scrap and additives), produced aluminum and dross were provided by Thorock Metal. Preliminary analysis of the NOx formation per 24-hour production cycle showed a 30% reduction.

During the parametric tests, it was noted that measurements showed abnormally high oxygen concentrations in the furnace when the furnace was operated at "low fire" conditions. GTI measured 17%-20% O2 while the proper oxygen concentration under normal firing conditions (assuming 10% -15 % excess air) should not have exceeded 3% O2. It was at this point in the project that the issue of infiltration became apparent. The excessively high oxygen concentrations in the furnace appeared to be related to the movement of hot exhaust gas up the stack, which lowered the static pressure in the furnace. The furnace is not airtight, so air can enter through gaps and cracks in and around the loading doors and around the main door. The infiltration of air into the furnace entails several negative consequences. Oxygen from the air introduced into the combustion zone may have enhanced NOx and dross formation. Cold air flow also cools the furnace chamber, reducing overall process efficiency and lengthening the production time. The shift to Flex-Flame operation was not responsible for the occurrence of

infiltration. Once data from previous baseline tests was checked, it was discovered that due to the design of the furnace, infiltration had always occurred.

In the course of tests during March 2007, it was found that the temperature of the furnace varied widely, and was determined to be caused by the operational approach taken by operators at Thorock Metals. At various points in the process, the operators called for more or less heat, depending on the particular operation being pursued at the time. During scrap melting, for example, more heat might be called for, whereas alloying operations, which are diffusion-driven and take time, might involve a lower furnace setpoint. This mode of operation affects the overall thermodynamic efficiency of the process, but in this case, the thermodynamic efficiency is less important than the specific need for more or less heat required by the operators. A plot of a representative temperature history, taken during one 24-hour period in March 2007, shows the wide variation in firing rates and temperatures seen during this particular test (Figure 6). Similar variations were observed during the other tests.

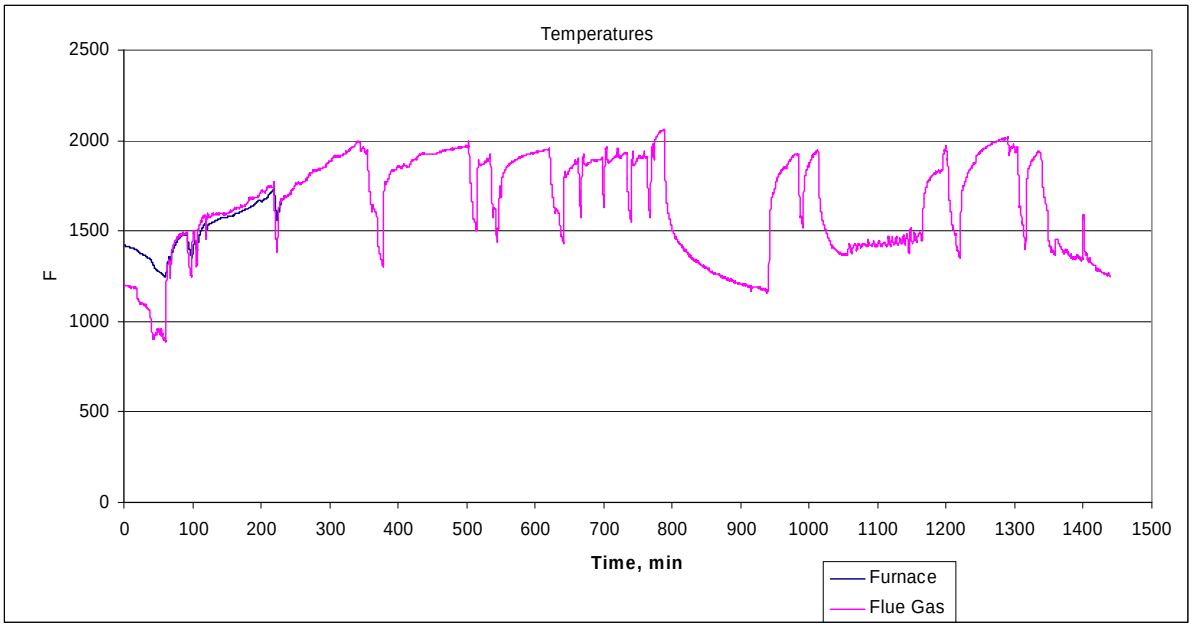

Figure 6. Furnace Temperature History, March 14-15, 2007
Source: Gas Technology Institute, 2008

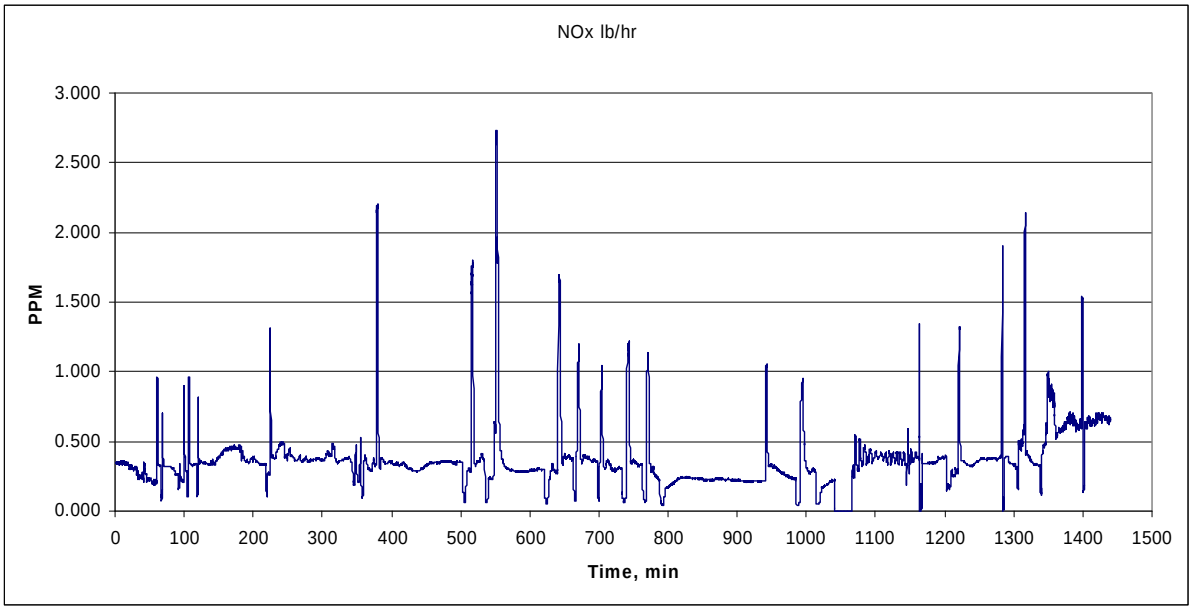

Figure 7. Production of Nitrous Oxides, in Pounds/Hour, March 14-15, 2007

Source: Gas Technology Institute, 2008

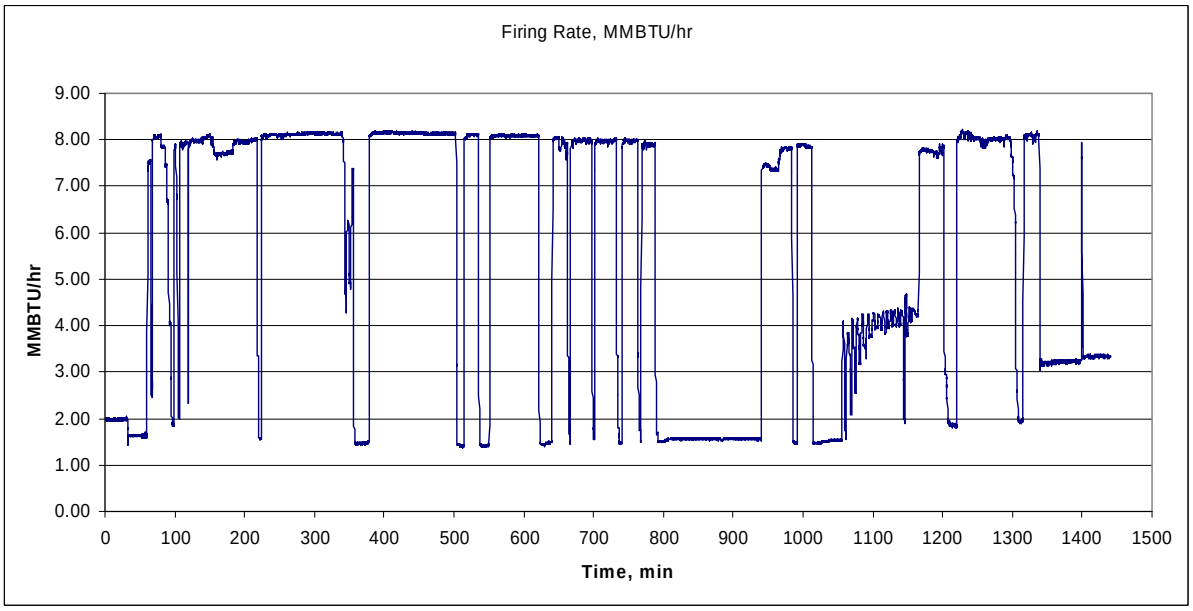

Figure 8. Firing Rate, March 14-15, 2007

Source: Gas Technology Institute, 2008

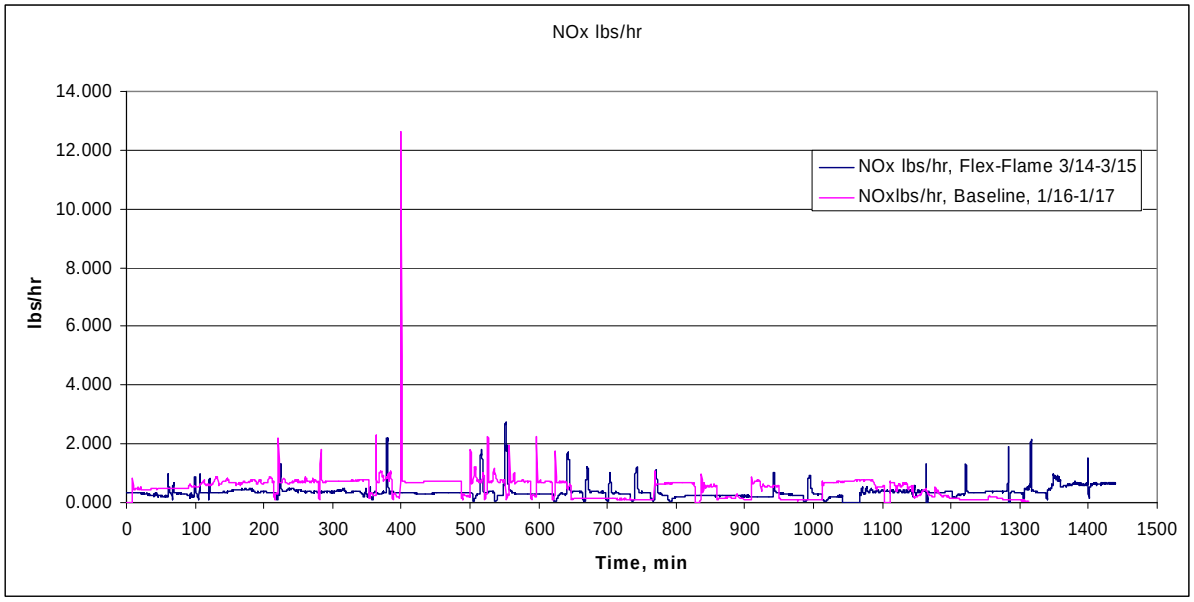

Figure 9. Comparison of NOx Production of Baseline Case and Flex-Flame Case

Source: Gas Technology Institute, 2008

The rate of production of nitrous oxides was similarly unsteady, as can be seen in Figure 7. No clear correlation was found between temperature histories and NOx production. However, the total firing rate was also compared with NOx production as shown in Figure 8. It was found that the overall amount of NOx produced was relatively steady, but spikes were observed whenever the furnace was ramped up from "low fire" to "high fire." It appears that these spikes in NOx production are also linked to the infiltration issue. During the "low fire" periods, the furnace filled with air and oxygen, and, when the burners shifted back to "high fire," the large amounts of oxygen present appear to have made short periods of intense combustion possible. The high flame temperatures observed during these periods made it possible for high concentrations of NOx to form.

Figure 9 shows a comparison of NOx production rates taken during 24-hour production periods occurring during baseline and Flex-Flame tests. As can be seen in figure 9, the NOx production rate is significantly lower during Flex-Flame operation, often by as much as half. Spikes in NOx production were observed under both baseline and Flex-Flame operating conditions, and NOx production rates fluctuated during both tests. The baseline case also displayed a very dramatic spike during which the NOx production rate increased by a factor of more than ten. This phenomenon is not fully understood. Several factors are involved in the development of a spike of this type, but no similar spike is present in the data from the Flex-Flame test in the plot. Given the unsteady nature of the rate of production of nitrous oxides (and of other exhaust components), integrated values based on the test data were computed in order to make a more reliable comparison between baseline operation and Flex-Flame operation. Comparisons of the integrated values obtained during the tests are described below.

While the tests conducted in March 2007, established that the Flex-Flame system was generally working as intended, the presence of the excess oxygen caused GTI engineers to begin evaluating strategies that could reduce infiltration.

In April 2007, discussions continued as to the preferred way to address the problem of infiltration into the furnace. Although it was recognized that atmospheric infiltration would affect the results to some extent; another field test was attempted in order to establish the effect of the Flex-Flame approach on the furnace performance. GTI personnel attempted to gather data at the site from April 9, 2007 to April 13, 2007. Data gathered during this test was useful in terms of establishing the effect of the Flex-Flame approach on the performance of the furnace. Since infiltration had already occurred previously during baseline testing, it was appropriate to test the Flex-Flame approach under similar conditions in order to establish a valid basis for comparison.

From May 7 through May 11, 2007, further data was gathered at the site by GTI personnel. Again, infiltration was observed, but the data gathered was useful in establishing the validity of the Flex-Flame approach. After considerable discussion within GTI, and with project partners and vendors, a technical approach, designed to minimize infiltration, was developed. The solution pursued involves a motorized controller for the damper on top of the main furnace stack (see Figure 10). When implemented, the damper would reduce the draft (generated by the hot gases in the furnace as they flow up the stack) when the burners are at "low fire". The damper position will be set by the current furnace controls. No additional sensor (such as a furnace pressure sensor) would be used. However, it would take several months to install the damper control system, and further data was taken in the meantime.

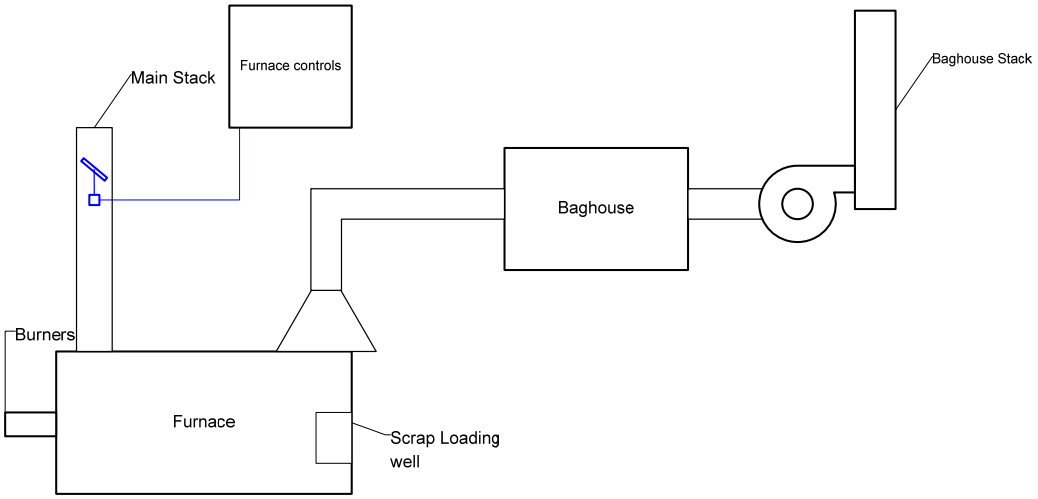

Figure 10. Damper Control Scheme Designed to Reduce Infiltration During Periods of "Low Fire" Operation

Source: Gas Technology Institute, 2008

In June 2007, the last test in this series was carried out. GTI personnel were on site from June 4, 2007 until June 7, 2007. One aim of this trip was to convert the furnace from two-blower to one-blower operation. The previous arrangement, which used two blowers to provide separate streams of primary and secondary combustion air to the burners, was not ideal; in practice, the second blower creates additional costs, and adds to the complexity of the system. The equipment installed at the beginning of the project was designed to allow the burners to operate in either the single or double-blower mode. The plumbing of the system was reset to allow both burners to operate in a single-blower mode without the need for the additional blower. GTI engineers and Thorock Metals representatives evaluated the Flex-Flame system performance in single-blower mode. In terms of combustion performance, the system performed as well as when operated in double-blower mode. This test, in addition to the previous tests in March, April and May, provided enough data for a valid comparison of the furnace behavior under normal operation and under Flex-Flame operation. Further work related to this project would follow only after steps had been taken to address the issue of infiltration.

The characteristics of the furnace, fired in Flex-Flame mode, are shown in Table 4. Data from ten separate 24-hour periods of operation is shown. The data are drawn from field tests in March, April, May and June of 2007, as described above.

Table 4. Data Showing Characteristics of Furnace Operating in Flex-Flame Mode

Furnace Operating in Flex-Flame Mode									
Date	Alloy type	Dross (lb)	Dross (%)	Ingot Productio n (lb)	Energy (MMBtu)	Power (MMBtu/hr average)	CO2 total (lb)	NOx total (lb)	CO total (lb)
3/13/2007-3/14/2007	383	8224	9.24%	78847	138.3	5.8	16184	7.6	2.3
3/14/2007-3/15/2007	384	7037	8.61%	70236	133.9	5.6	15661	8.7	5.3
4/11/2007-4/12/2007	413	6023	7.41%	74805	133.1	5.5	15576	6.3	10.9
4/12/2007-4/13/2007	384	6963	8.61%	70783	N/A	N/A	N/A	N/A	N/A
5/7/2007-5/8/2007	384	9154	12.36%	63145	129.3	5.4	15132	5.4	13.2
5/8/2007-5/9/2007	384	7584	9.85%	67198	143.0	6.0	16733	6.7	22.6
5/9/2007-5/10/2007	384	8271	11.27%	63374	126.1	5.4	14753	3.0	2.9
6/4/2007-6/5/2007	384	7390	10.88%	58897	137.4	5.7	16075	4.5	2.3
6/5/2007-6/6/2008	380	6470	8.59%	66992	155.2	6.5	18160	9.2	0.6
6/6/2007-6/7/2009	384	7741	10.00%	68233	133.4	5.6	15614	8.6	2.3

Source: Gas Technology Institute, 2008

A direct comparison of average values of dross production, total CO2 production, total NOx production, and total CO production resulting from operation with and without the Flex-Flame approach is shown in Table 5.

Table 5. Comparison of Baseline and Flex-Flame Furnace Characteristics

Baseline vs. Flex-Flame Operation							
	Dross (%)	Ingot Production (lb)	Energy (MMBtu)	Average Power (MMBtu/hr)	CO2 Total (lb)	NOx Total (lb)	CO Total (lb)
Baseline	9.32%	67848	136.37	5.78	15954.71	11.45	12.40
Flex-Flame	9.68%	68253	137.05	5.73	15987.55	6.67	6.91
Change	3.87%	N/A	0.21%	-1.22%	0.21%	-41.78%	-44.25%

Source: Gas Technology Institute, 2008

When the furnace was operated in Flex-Flame mode, far less NOx and CO were produced. These pollutants were reduced by over 40%. Other metrics showed little if any change, indicating that the Flex Flame approach did not negatively affect other aspects of the process. The Flex-Flame approach may offer considerable benefits, particularly in applications where a reduction in NOx emissions is important.

The Flex Flame technology did not affect dross production in a beneficial way. The total amount of dross produced appears to have increased slightly when the system was operated in Flex-Flame mode. This increase is not statistically significant. With the Flex-Flame technology in place, dross accounted for between 7.41% to 12.36% of the total product. The dross weight includes salt used as flux, oxidized aluminum, and any other material skimmed from the melt that was not useable aluminum alloy. On average, dross was 9.68% of the product, but this average was associated with a standard deviation of 1.5%. The difference between the total dross formed during normal operation, and the total dross formed when the furnace was running in Flex-Flame mode was 0.36% of the total product, well within the standard deviation associated with the average amount of dross formed. Dross formation depends on a number of factors, including scrap composition, behavior of the flux applied to the surface of the molten aluminum, and, unfortunately, infiltration of oxygen into the furnace. Under the circumstances, it appears that these other factors played a greater role than any benefit the Flex-Flame combustion approach could have provided.

3.4.1. Motorized Damper Fabrication and Effect of Motorized Damper

In July 2007, GTI obtained a quotation for the fabrication and installation of the motorized damper system. An estimated delivery time and a general design description of the motorized damper system were also obtained. It was established that $29,000 additional funds would be needed for this work. The damper system hardware purchase assembly and installation would cost approximately $7,000, and GTI testing of the system would cost approximately $22,000, and involve two GTI engineers for 5 days.

The data collected by GTI during the tests conducted on June 4 through June 7, were also reduced and analyzed. The results confirmed the findings of earlier tests.

In August 2007, a revised budget and scope of work needed for the project amendment (allowing installation of the damper) were submitted. In September 2007, a purchase order was placed with Pyro Industrial Systems. The company proceeded with the design and fabrication of the motorized damper. Due to subcontractor scheduling conflicts the damper was not installed as quickly as had been anticipated. Ultimately, the motorized damper was fabricated in December 2007, and was in place in time for further testing in February 2008.

The modifications made to the damper consisted of a motor and a control circuit which adjusted the position of the damper in response to a change in firing rate within the furnace. When the furnace controller called for "high fire," the damper opened, and when it called for "low fire," the damper closed. It should be noted that the stack is not necessarily the only pathway for hot gases leaving the furnace. Due to the furnace design, hot gas probably escaped from a wide variety of gaps and cracks in the furnace envelope. The ability of the damper to control the atmosphere in the furnace was somewhat limited. Periods when the furnace was being tapped were particularly problematic. As the level of liquid metal in the bath dropped, more air was able to enter the furnace through the main door connecting the furnace and the well, and it became essentially impossible to control the atmospheric composition in the furnace. Nevertheless, it was thought that the motorized damper would have some effect on the composition of the furnace atmosphere during periods when the melt level was high enough to block the passage between the well and the furnace.

GTI personnel traveled to Thorock Metals in February 2008, to document the effect of the damper and to remove data acquisition equipment that had been brought in for the project. Data was taken during a 24-hour period beginning Monday, February 25, and ending Tuesday, February 26. Several technical issues arose during this period and not all the data was found to be valid. The best data for comparison purposes was selected and covered a 154-minute period of operation. During this time the furnace temperature was relatively stable, and the melt level was high enough to allow the furnace atmosphere to be controlled relatively well.

Figures 11, 12, 13 and 14 show plots of furnace temperature, firing rate of the left burner, oxygen and carbon dioxide concentration, and NOx production (in lbs/hr), respectively. It should be clear from the plots that the burners were firing rather steadily in the first half of the period examined, and began cycling rapidly in the latter half of the period examined. The oxygen concentration still rose during periods when the furnace transitioned to low-fire conditions, however, the maximum oxygen concentration appeared to be approximately 14%. During previous tests, it was observed that during low-fire periods, the oxygen concentration in the furnace exhaust routinely approached 20%. Even with the motorized damper in place, NOx production was significantly affected by spikes and were observed every time the furnace returned to a high-fire condition.

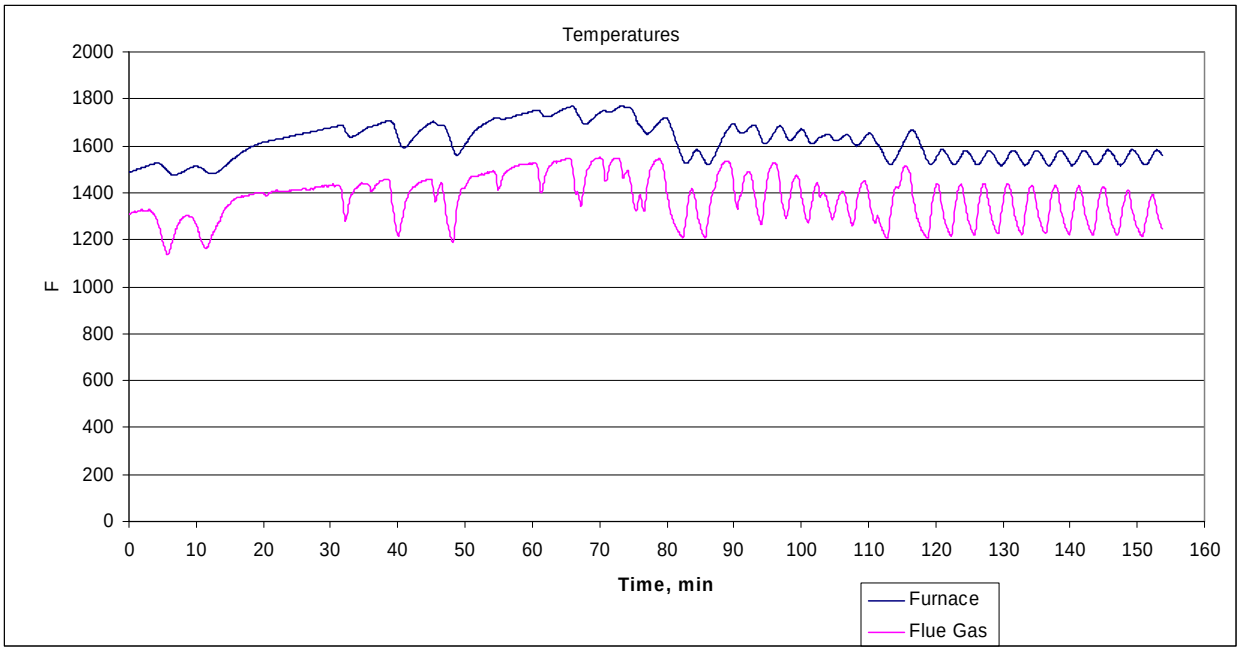

Figure 11: Furnace Temperature Plot Taken With Motorized Damper in Place

Source: Gas Technology Institute, 2008

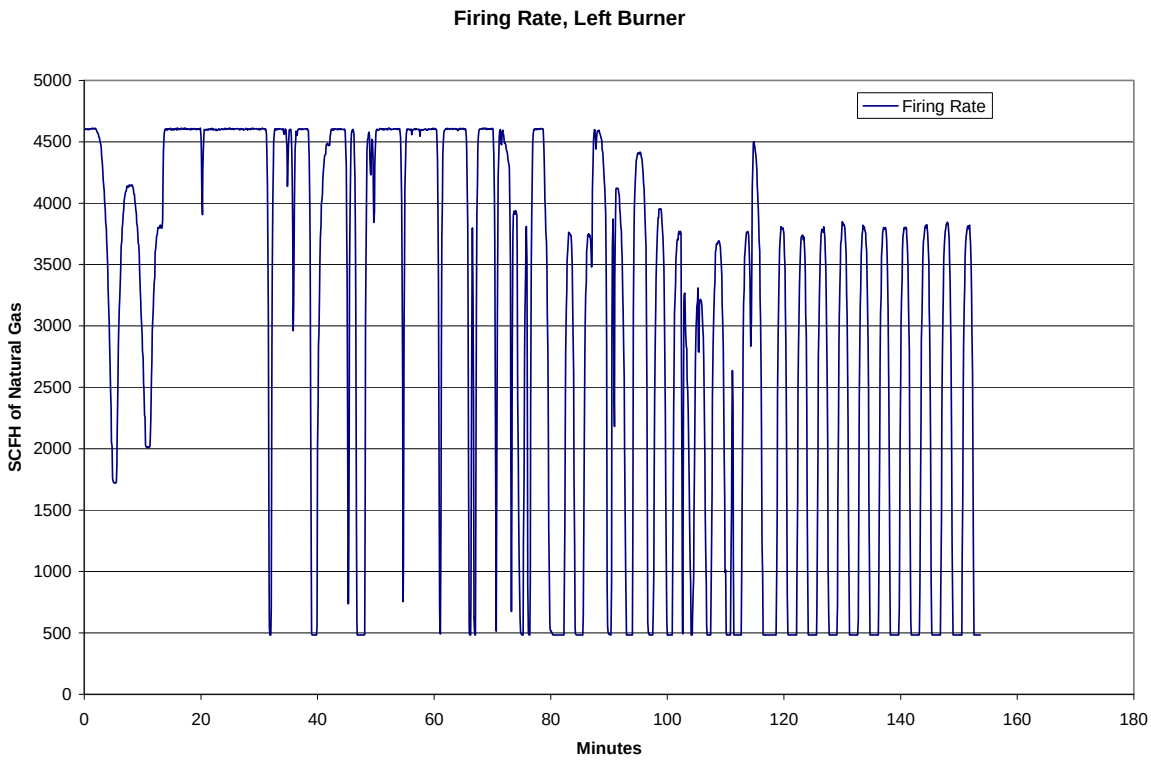

Figure 12: Left Burner Firing Rate During Tests With Motorized Damper Installed

Source: Gas Technology Institute, 2008

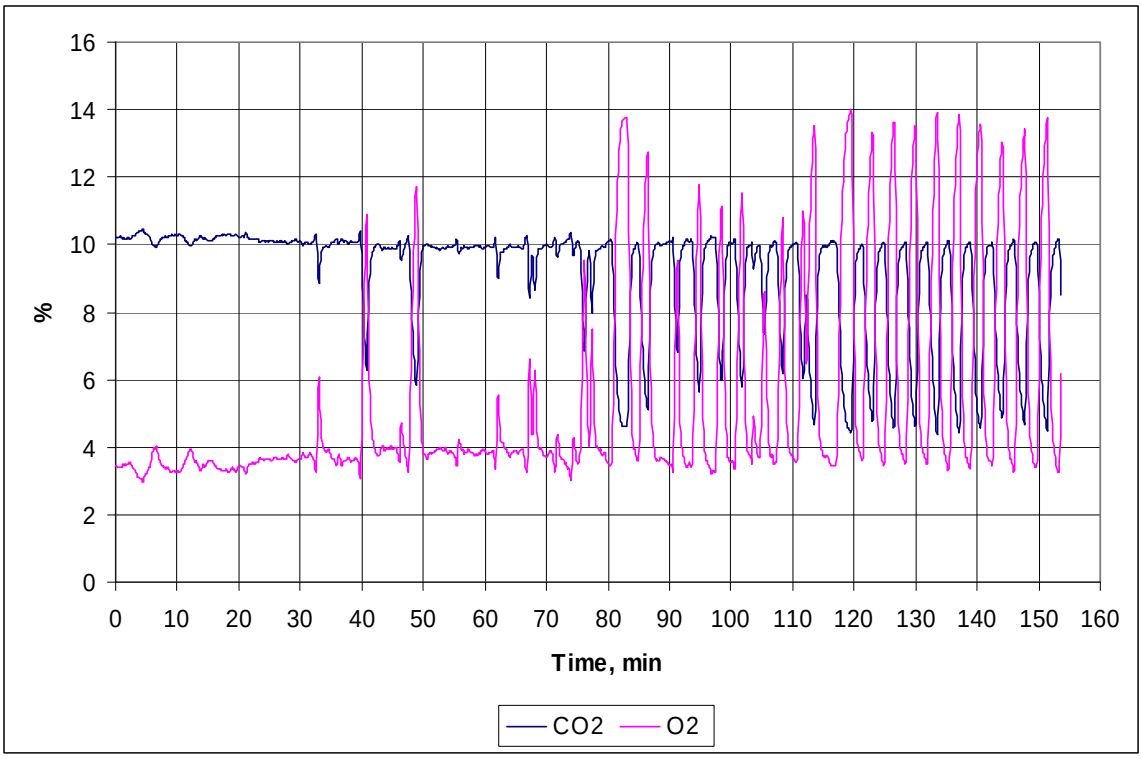

Figure 13: O2 and CO2 Concentrations in Furnace Exhaust During Tests with Motorized Damper

Source: Gas Technology Institute, 2008

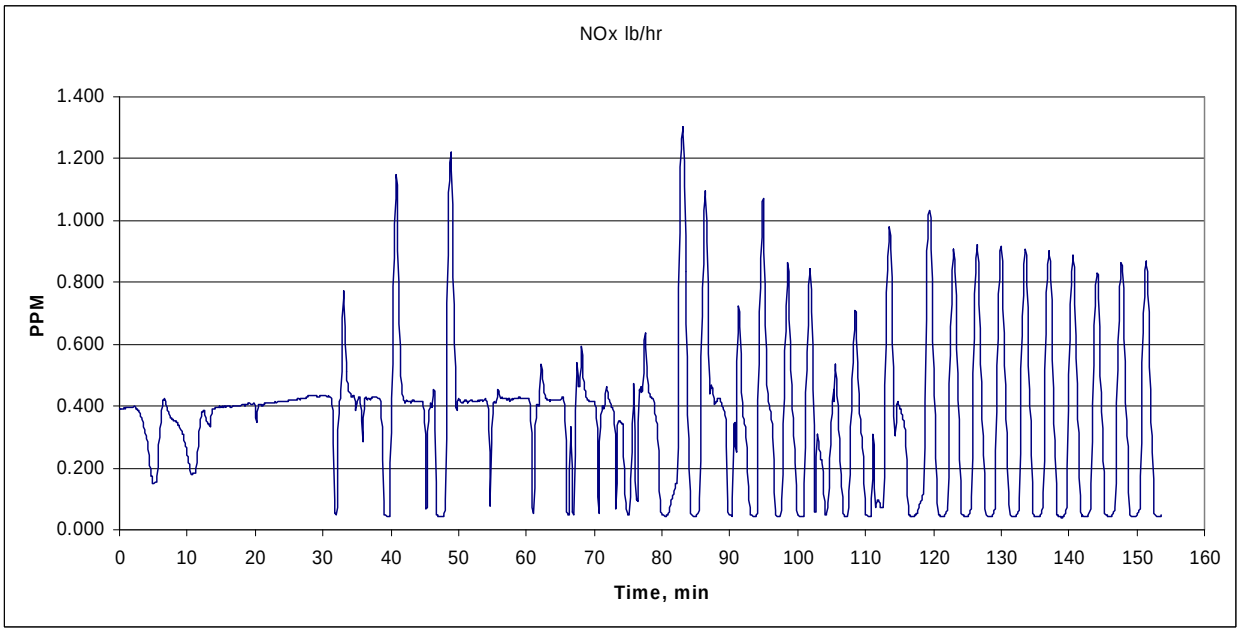

Figure 14: NOx Production During Tests With Motorized Damper

Source: Gas Technology Institute, 2008

On the whole, the evidence indicated that the installation of the damper somewhat reduced infiltration of air into the furnace, but a clear effect could not be fully established. The effect of the motorized damper on dross formation in the furnace is similarly unclear. Further work will be needed, either on this furnace, or on another aluminum remelting furnace, to fully establish the effect of Flex-Flame technology on NOx and dross formation under conditions where the furnace atmosphere can be tightly controlled.

3.5. Task 5. Preparations for Commercialization

The path for commercialization of the FFBS technology is through the project's manufacturing partner, Eclipse, Inc. Eclipse has the engineering, manufacturing, sales and service organization in place to supply systems to end users in California and throughout the U.S. and the world. Southern California Gas Company (SoCal) account managers will serve as trade allies by helping to evaluate potential applications and provide leads to Eclipse, Inc. SoCal will also consider offering financial incentives as available and mandated for energy efficiency improvements in their service territory. GTI will be available to support engineering, design, and evaluation of initial applications. Thorock Metals provides a proven demonstration site to support product introduction and will provide access to its facilities for review by potential new users.

Through the involvement of Eclipse during the project, technology know-how was transferred from GTI and the project to Eclipse technical and sales staff. GTI also completed an initial awareness building and technology transfer seminar on May 19, 2008, in Downey, CA, for end users, a regulatory agency, trade allies from Southern California Gas Company and the local sales organization of Eclipse. The seminar provided attendees with information on the technology and results from the field demonstration at Thorock Metals. Potential benefits were described and Eclipse contacts provided for the northern and southern California regions, SoCal, and GTI.

With support from the DVBE subcontractor, Magus Consulting Services, GTI completed a list of potential end users throughout the state of California. The list was used to develop the invitations for the technology transfer seminar and establishes a database of potential end users for initial contact by Eclipse and SoCal. The list is being expanded to cover other parts of the U.S. in order to build up a pool of potential users on which to base market and product rollout plans by Eclipse.

GTI has applied for a patent for the FFBS technology and it is currently being reviewed by the U.S. Patent's Office. Upon successful completion of the review, GTI will negotiate with Eclipse to define their access to rights to manufacture and sale FFBS products. A licensing term sheet will be drafted which will outline the license terms.

In order to pursue effective commercialization of Flex-Flame technology, a technology transfer plan has also been developed by GTI in conjunction with Eclipse. This plan has been appended and is located in the Appendices section of this report.

4.0 Conclusions and Recommendations

4.1. Conclusions

Based on the work carried out in pursuit of this project's goals, it appears that Flex-Flame combustion systems are able to reduce oxides of nitrogen and carbon monoxide released by reverberatory aluminum melters. The decreases documented by the work in this project may exceed 40% for both types of pollutants. The Flex-Flame approach also has the potential to reduce dross formation in aluminum melters, but the data gathered in the course of this project did not demonstrate a direct effect of Flex-Flame combustion on dross formation. The work carried out here has demonstrated that infiltration of atmospheric air into furnaces of the type studied is a serious concern. Efforts must be made in the design of modern furnaces to reduce the potential for infiltration as much as possible.

4.2. Commercialization Potential

The Flex-Flame technology should be regarded as ready for commercialization. Eclipse Inc., a major supplier of industrial combustion equipment, is prepared to deploy systems of this type wherever they may be needed. Flex-Flame systems may be particularly useful in applications where relatively large furnaces, fired at around 10 MMBtu/hr, must operate without producing excessive amounts of NOx.

4.3. Recommendations

Further work in this area is warranted. Reverberatory furnaces remain relatively inefficient and issues such as dross formation and infiltration tend to reduce their efficiency considerably. The fluxes currently used to increase heat transfer to the melt and reduce oxidation also release corrosive species present in the exhaust.

4.4. Benefits to California

The project has directly reduced the emissions of the target furnace that was equipped with a Flex-Flame combustion system. This furnace is now capable of operating in a much more sustainable mode, producing the same amount of aluminum with significant reductions in NOx and CO emissions. This furnace previously emitted 0.33 lbs of NOx and 0.36 lbs of CO per ton of aluminum alloy produced. It now emits 0.2 lbs of NOx and 0.2 lbs of CO per ton of aluminum alloy produced. If reproduced in other aluminum remelting facilities, this technology has the potential to significantly reduce harmful emissions in California.

5.0 References

1. Soupos, V., Zelepouga, S., and Rue, D., "High-Efficiency Low-Dross Combustion System For Aluminum Remelting Reverberatory Furnaces, Project Final Report," DOE Contract Number DE-FC07-00ID13903, July. 2005

6.0 Glossary

Btu	British Thermal Unit
CARB	California Air Resources Board
CEC	California Energy Commission
CO	Carbon Monoxide
DOE	United States Department of Energy
GTI	Gas Technology Institute
Nox	Oxides of Nitrogen
O2	Oxygen
OD	Outer Diameter
PIS	Pyro Industrial Systems
PM	Particulate Matter
PPM	Parts-per-million
SoCalGas	Southern California Gas
Sox	Oxides of Sulfur
TMC	Thorock Metals Company