Arnold Schwarzenegger
Governor

CERTS MICROGRID LABORATORY TEST BED

Test Bed Design Schematics

APPENDIX A

Prepared For:
California Energy Commission
Public Interest Energy Research Program

Prepared By:
Lawrence Berkeley National Laboratory

CERTS
CONSORTIUM FOR ELECTRIC RELIABILITY TECHNOLOGY SOLUTIONS

Prepared By:
Lawrence Berkeley National Laboratory
Joseph H. Eto, Principal Investigator
Berkeley, CA 94720
Ed Linton, Northern Power Systems
Commission Contract No. 500-03-024

Prepared For:
Public Interest Energy Research (PIER)
California Energy Commission

Bernard Treanton
Contract Manager

Mike Gravely
Program Area Lead
ENERGY SYSTEMS INTEGRATION

Mike Gravely
Office Manager
ENERGY SYSTEMS RESEARCH

Martha Krebs, Ph.D.
PIER Director

Thom Kelly, Ph.D.
Deputy Director
ENERGY RESEARCH & DEVELOPMENT DIVISION

Melissa Jones
Executive Director

DISCLAIMER

This report was prepared as the result of work sponsored by the California Energy Commission. It does not necessarily represent the views of the Energy Commission, its employees or the State of California. The Energy Commission, the State of California, its employees, contractors and subcontractors make no warrant, express or implied, and assume no legal liability for the information in this report; nor does any party represent that the uses of this information will not infringe upon privately owned rights. This report has not been approved or disapproved by the California Energy Commission nor has the California Energy Commission passed upon the accuracy or adequacy of the information in this report.

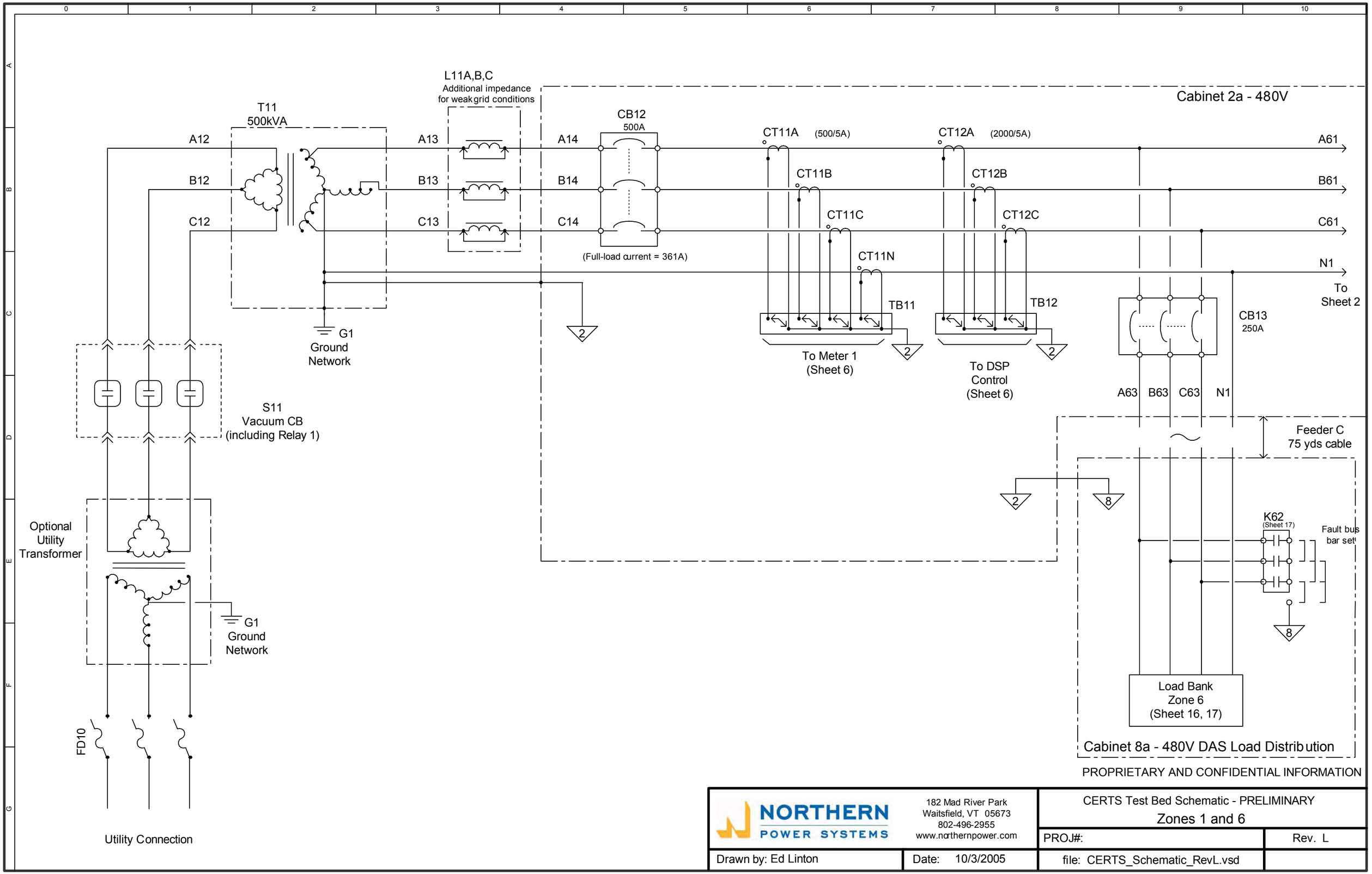

Figure 1: CERTS Test Bed Schematic - Preliminary - Zones 1 and 6

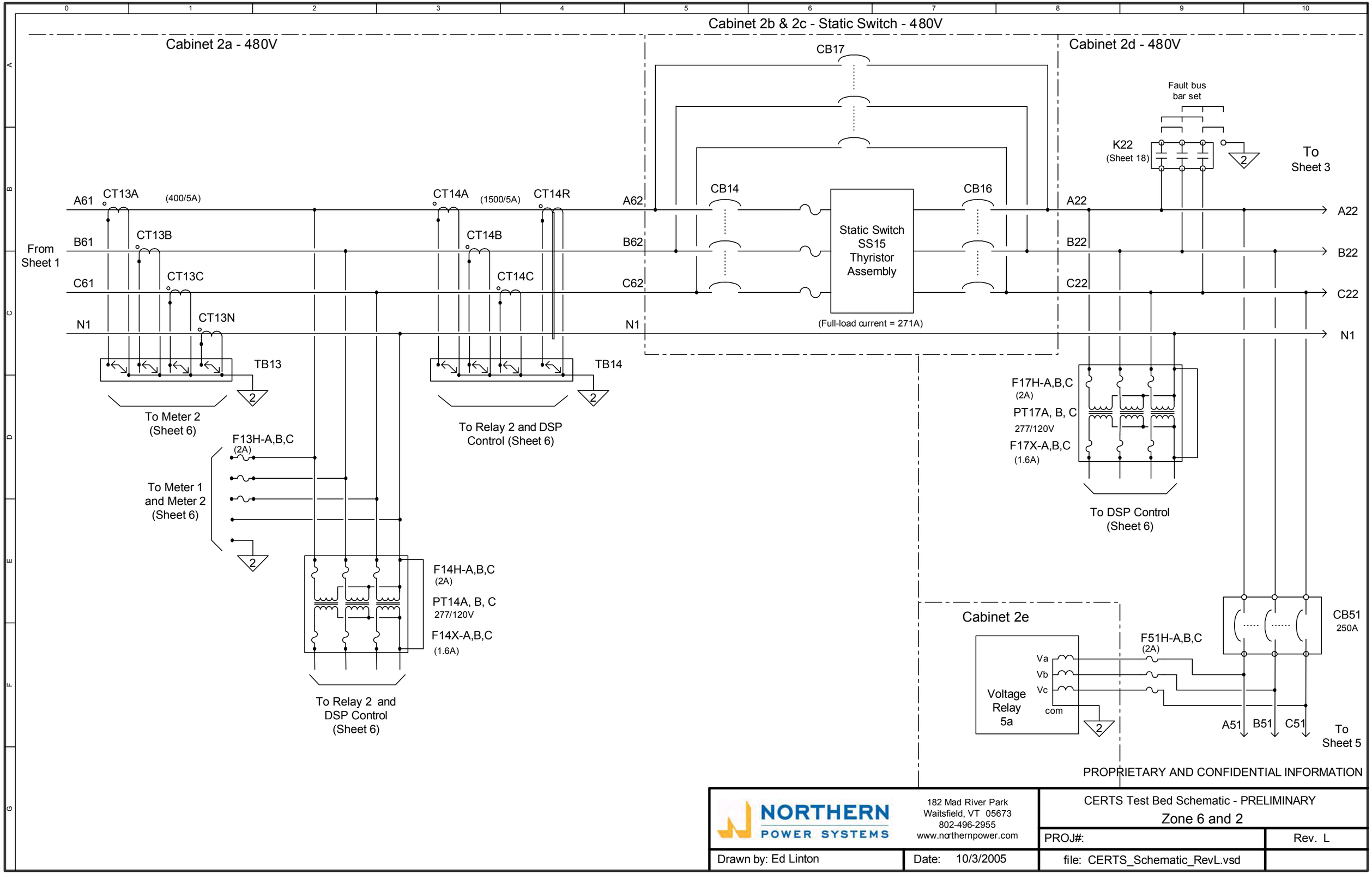

Figure 2: CERTS Test Bed Schematic - Preliminary - Zones 6 and 2

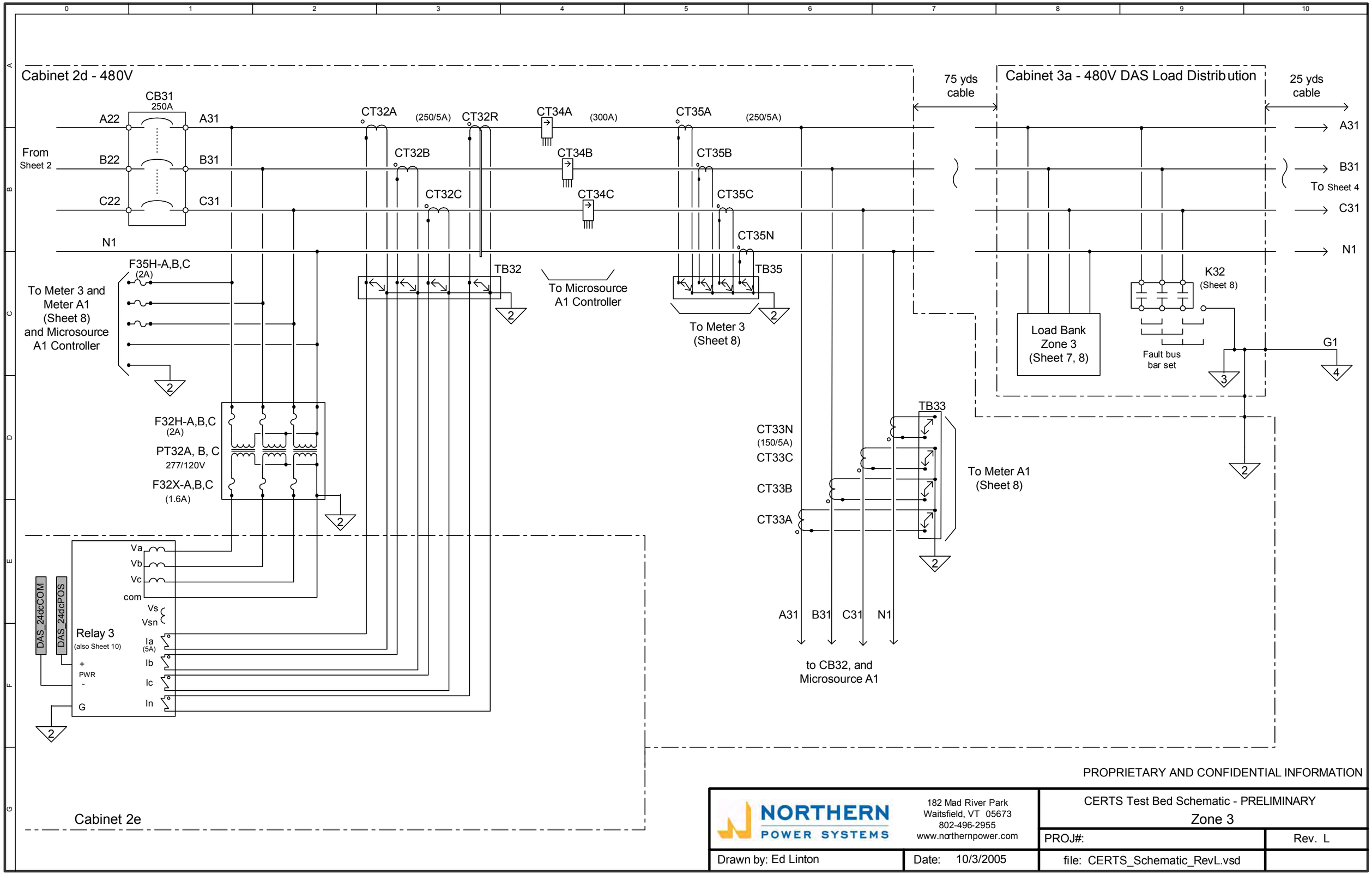

Figure 3: CERTS Test Bed Schematic - Preliminary - Zone 3

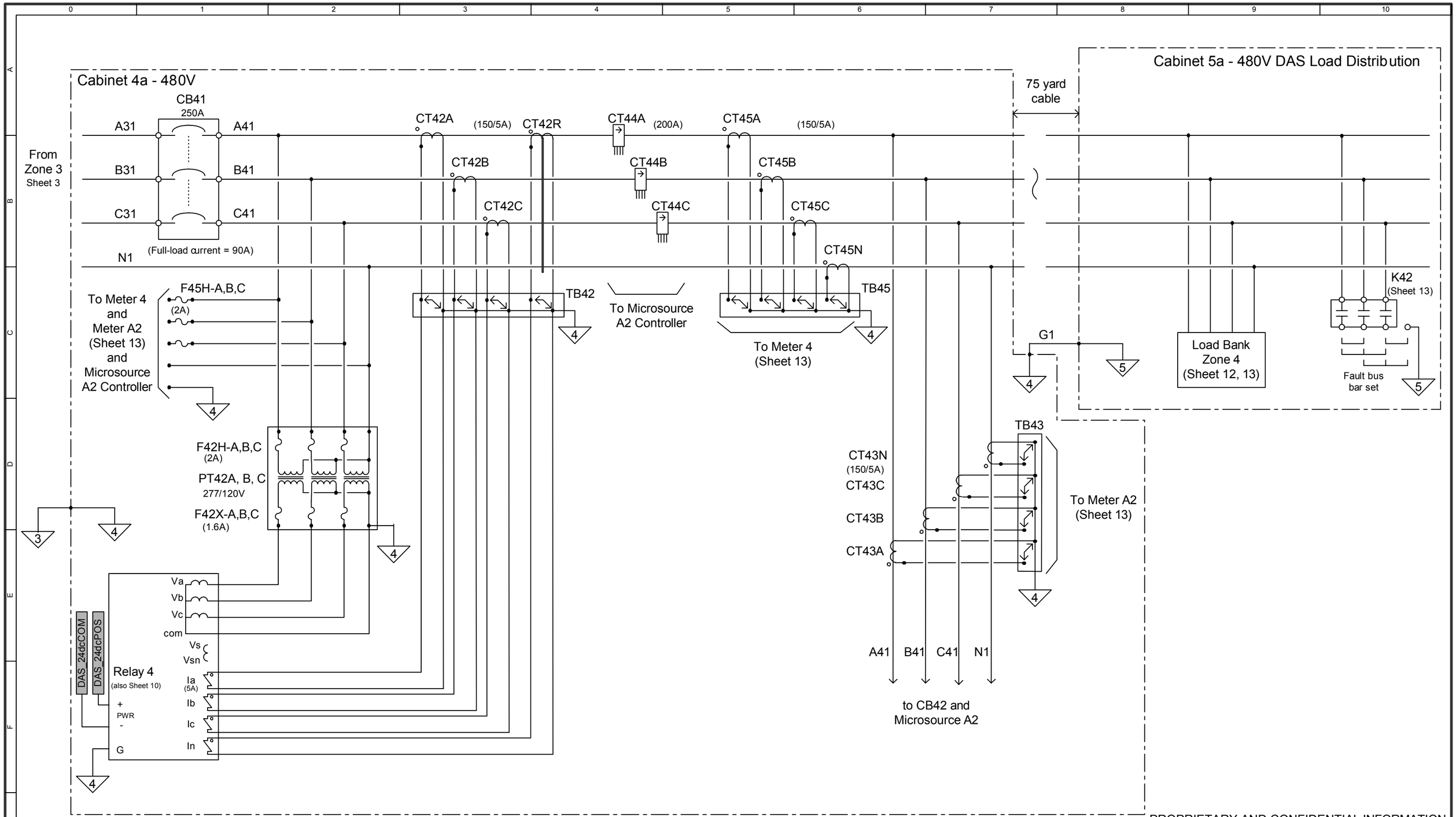

Figure 4: CERTS Test Bed Schematic - Preliminary - Zone 4

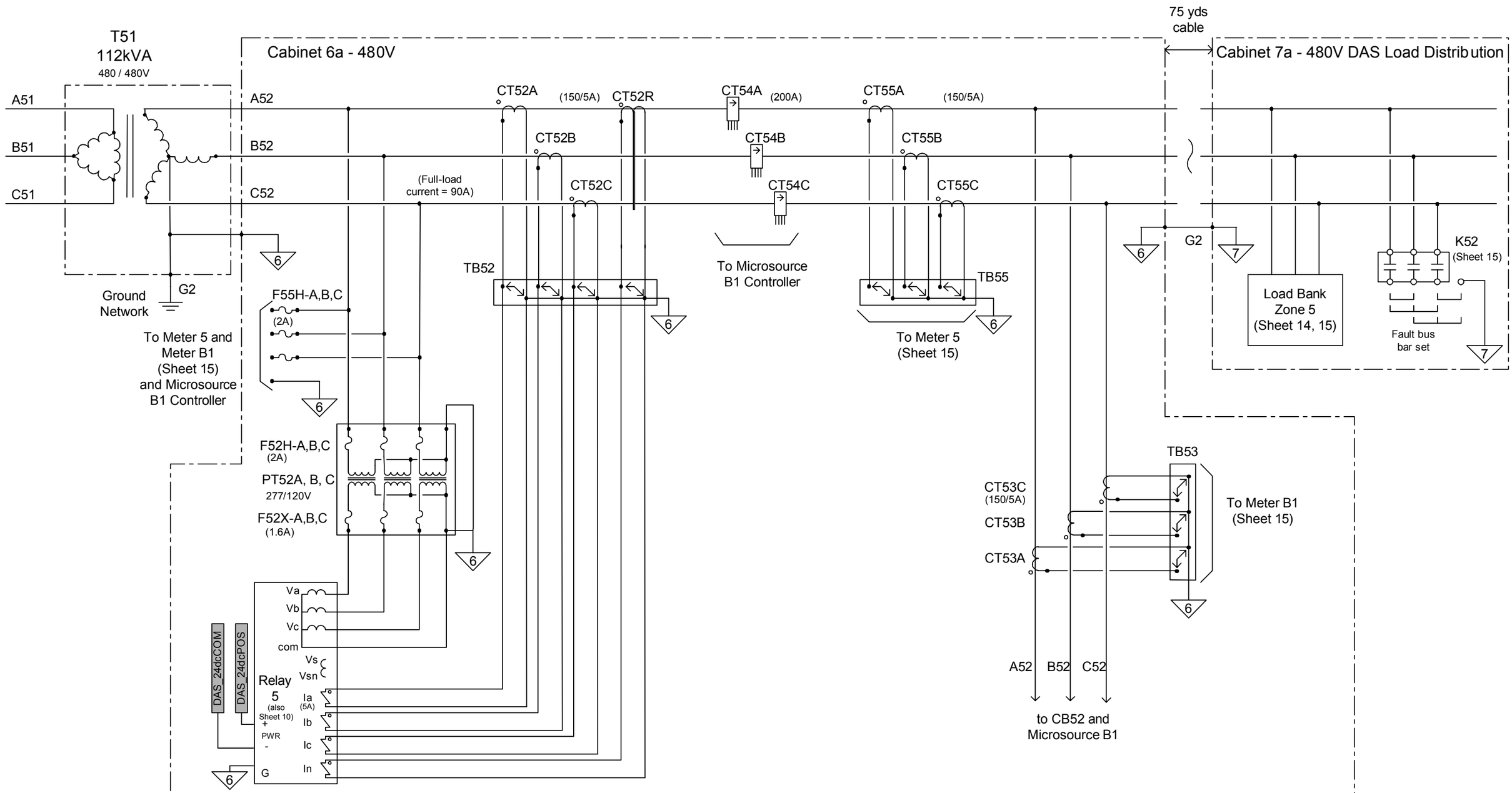

PROPRIETARY AND CONFIDENTIAL INFORMATION

NORTHERN POWER SYSTEMS	182 Mad River Park Waitsfield, VT 05673 802-496-2955 www.northernpower.com	CERTS Test Bed Schematic - PRELIMINARY Zone 5	
		PROJ#:	Rev. L
Drawn by: Ed Linton	Date: 10/3/2005	file: CERTS_Schematic_RevL.vsd	

Figure 5: CERTS Test Bed Schematic - Preliminary - Zone 5

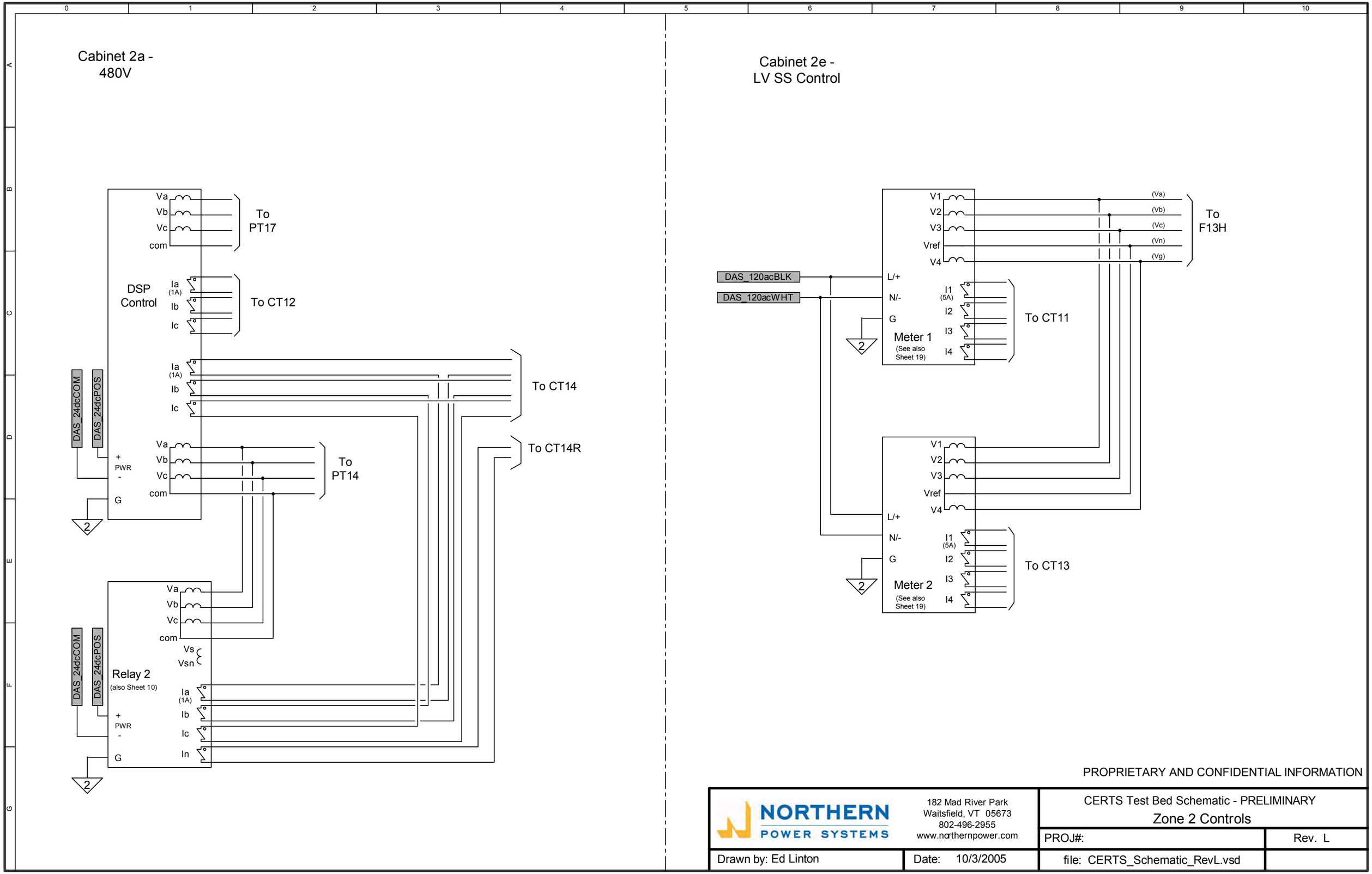

Figure 6: CERTS Test Bed Schematic - Preliminary - Zone 2 Controls

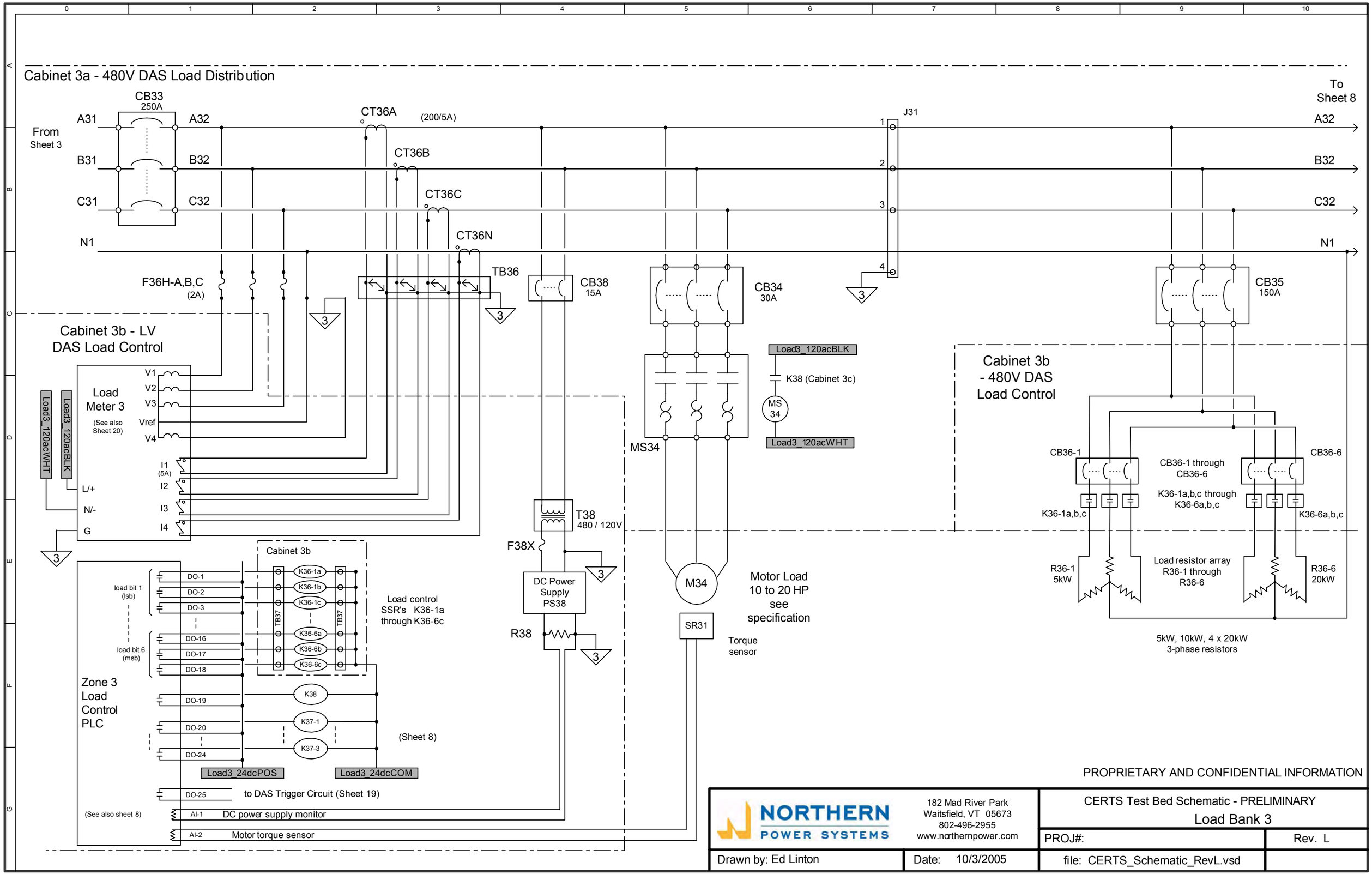

Figure 7: CERTS Test Bed Schematic - Preliminary - Load Bank 3

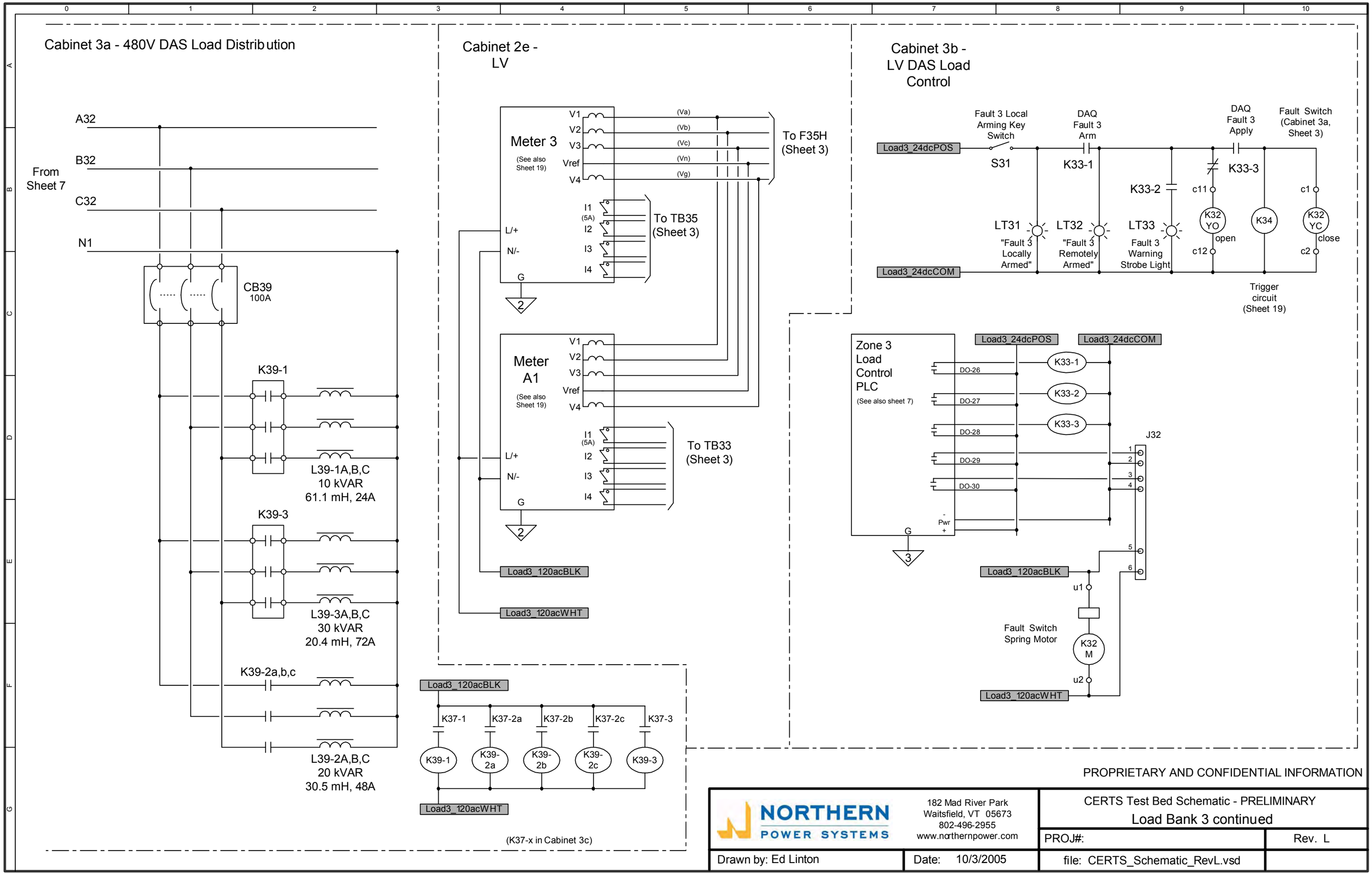

Figure 8: CERTS Test Bed Schematic - Preliminary - Load Bank 3 Continued

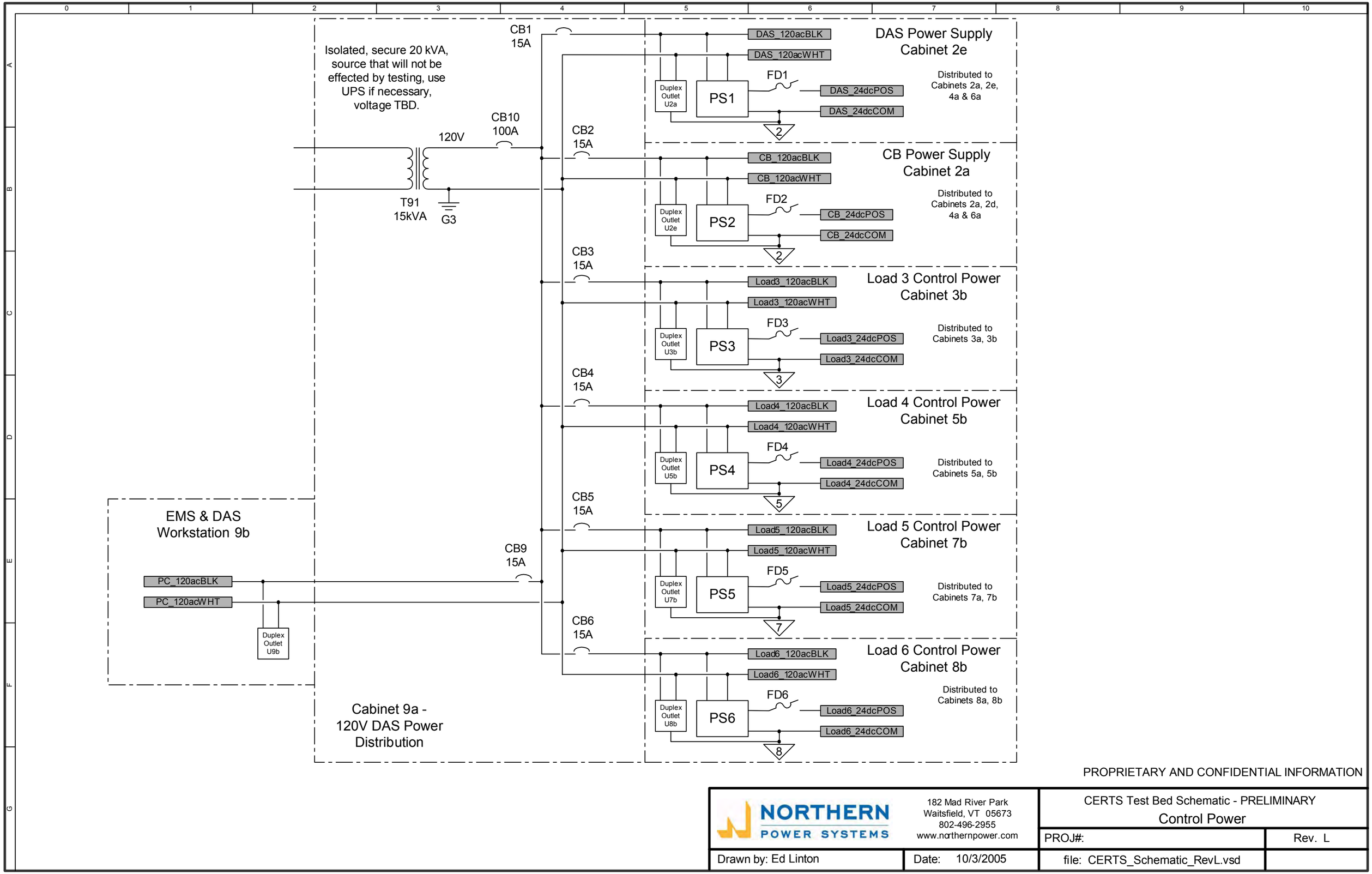

Figure 9: CERTS Test Bed Schematic - Preliminary - Control Power

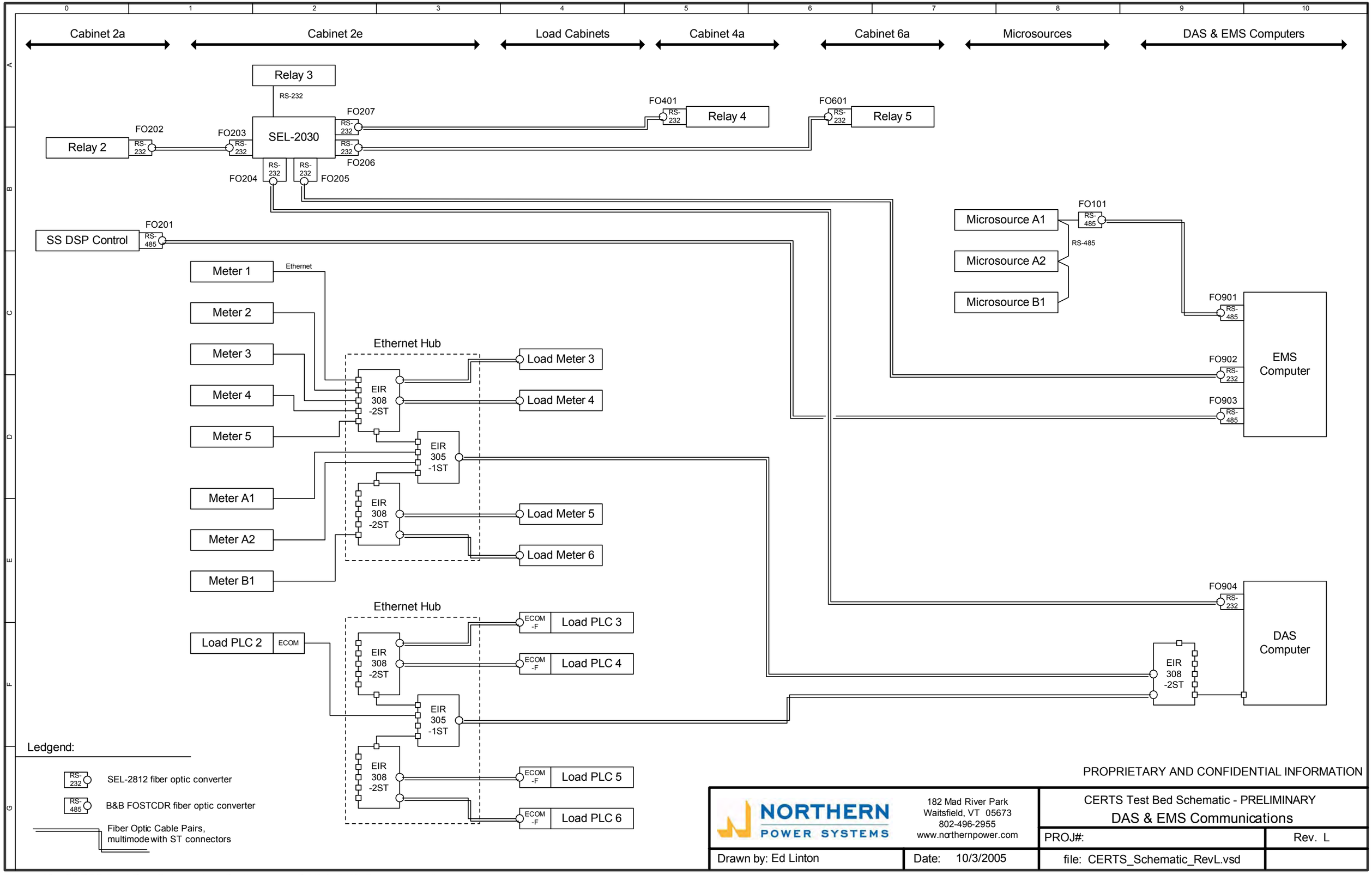

Figure 10: CERTS Test Bed Schematic - Preliminary - DAS & EMS Communications

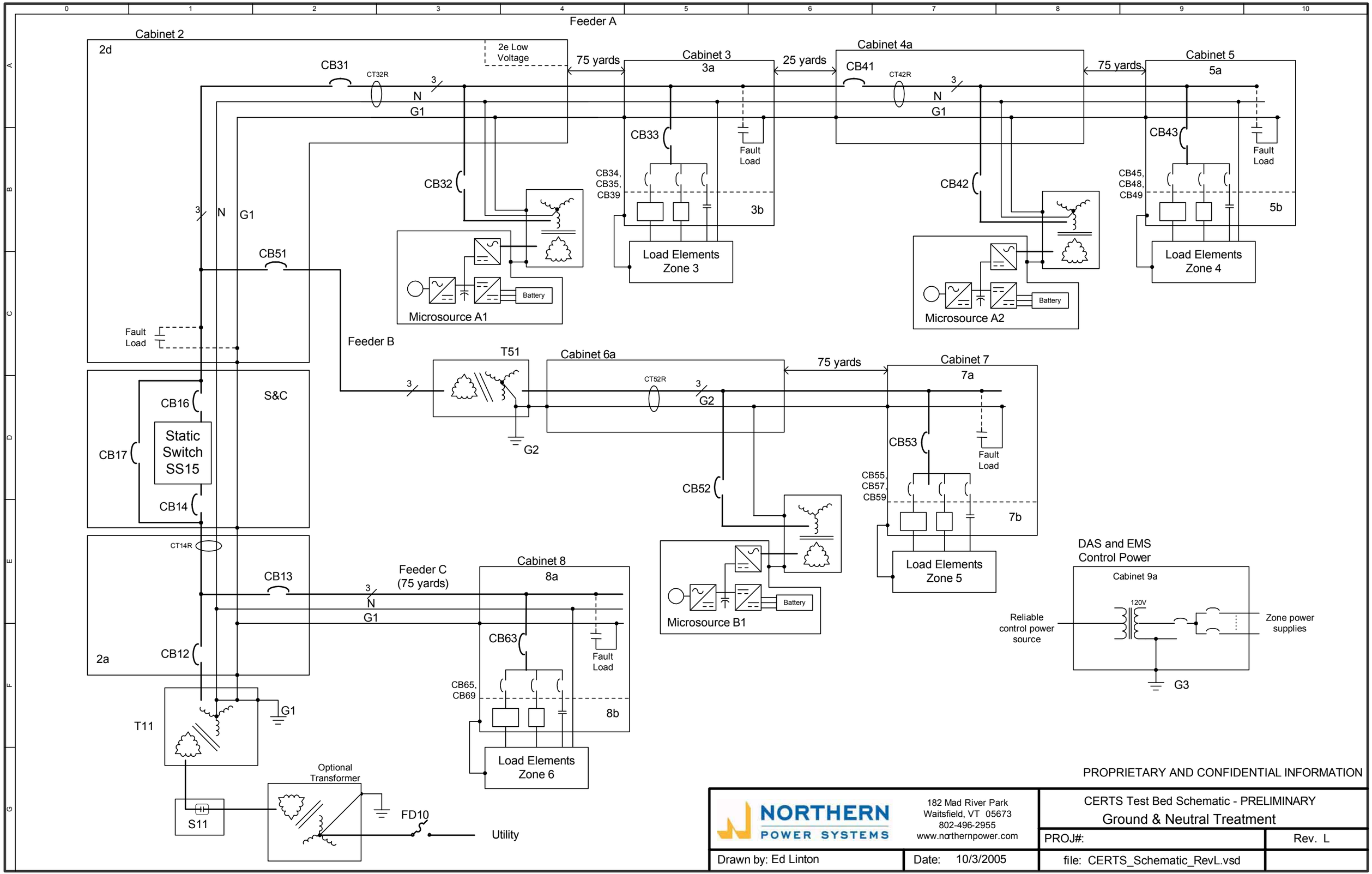

PROPRIETARY AND CONFIDENTIAL INFORMATION

NORTHERN POWER SYSTEMS
182 Mad River Park
Waitsfield, VT 05673
802-496-2955
www.northernpower.com

CERTS Test Bed Schematic - PRELIMINARY
Ground & Neutral Treatment

PROJ#:
Rev. L

Drawn by: Ed Linton
Date: 10/3/2005
file: CERTS_Schematic_RevL.vsd

Figure 11: CERTS Test Bed Schematic - Preliminary - Ground & Neutral Treatment

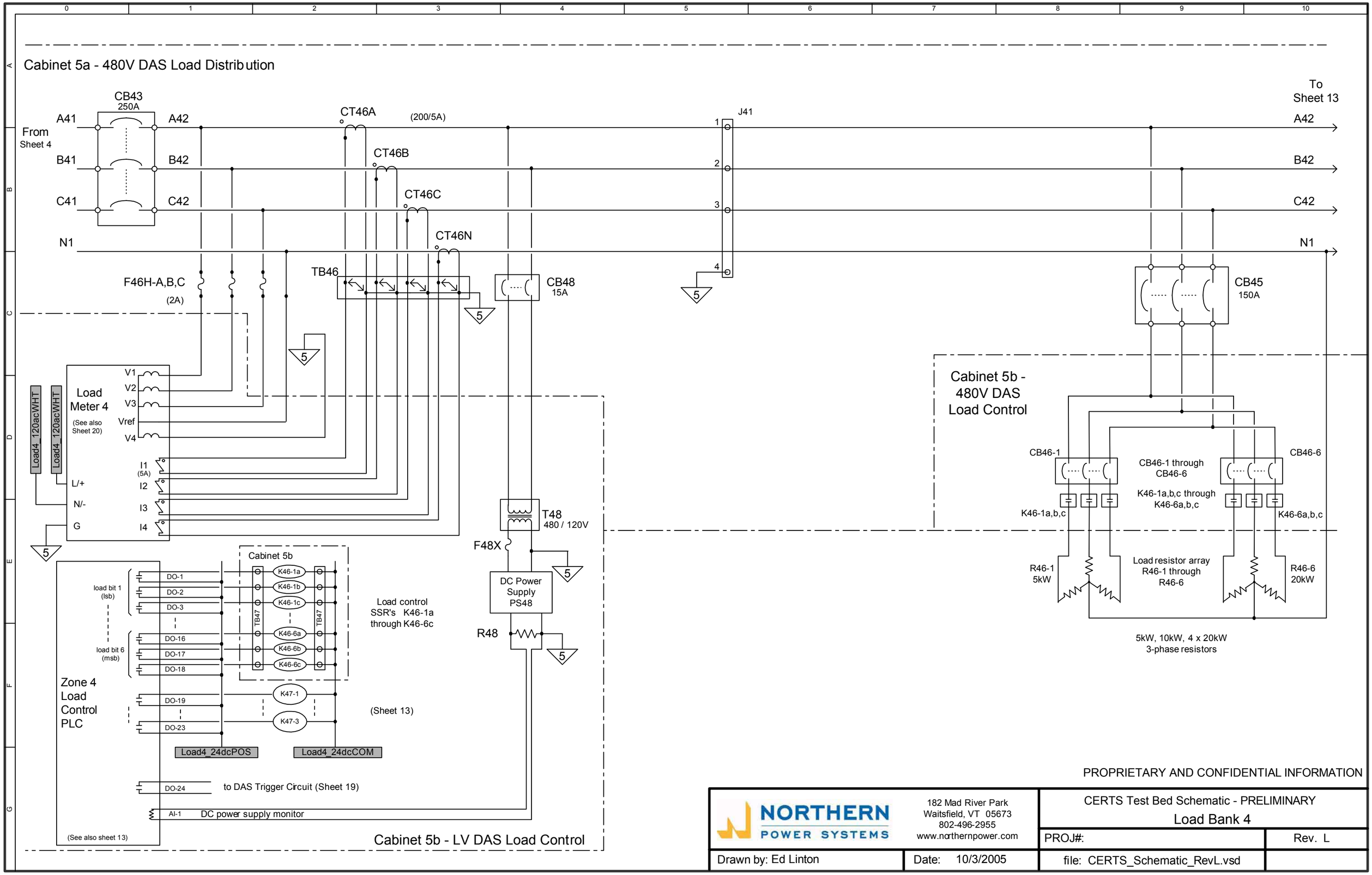

Figure 12: CERTS Test Bed Schematic - Preliminary - Load Bank 4

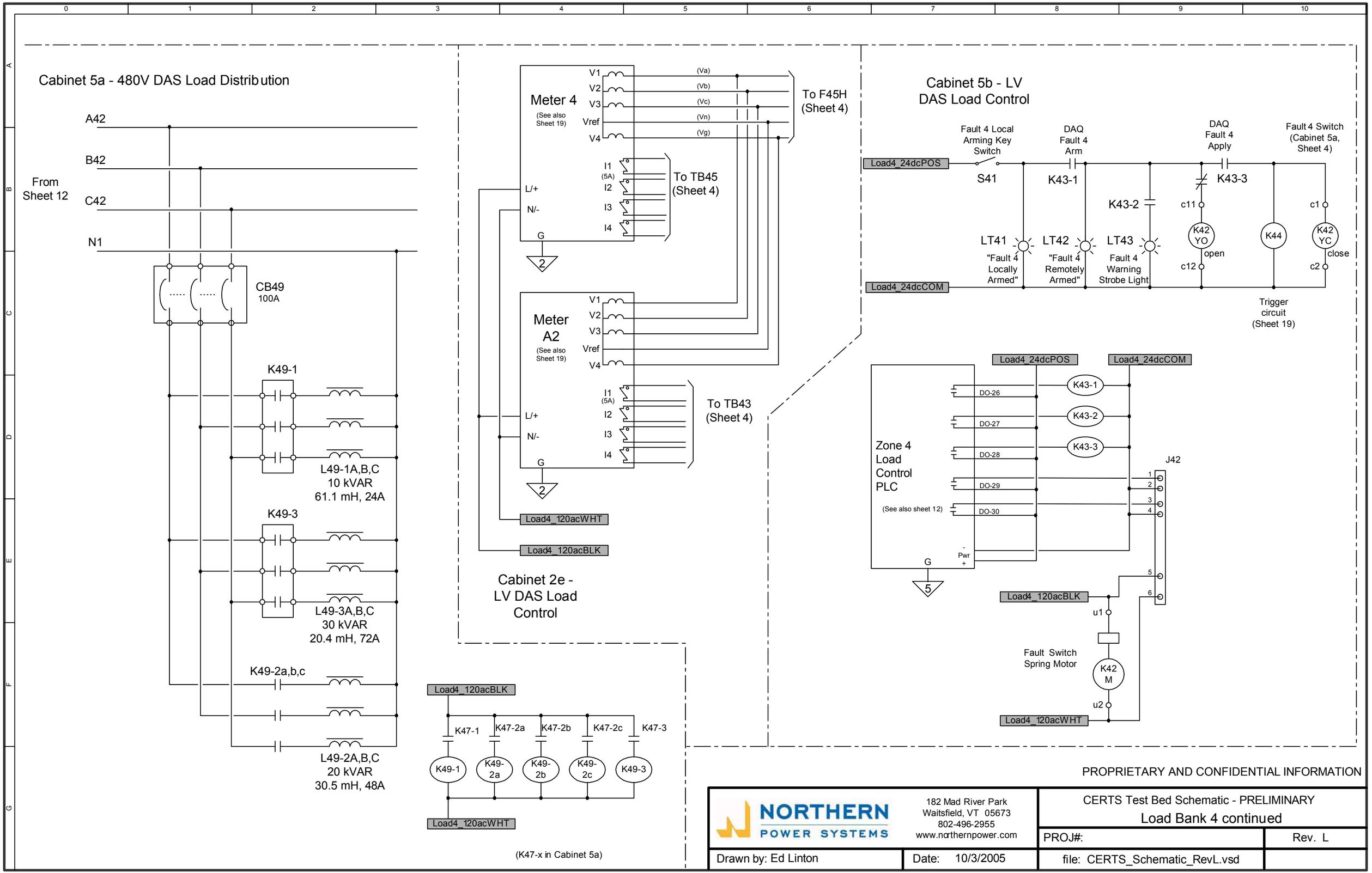

Figure 13: CERTS Test Bed Schematic - Preliminary - Load Bank 4 Continued

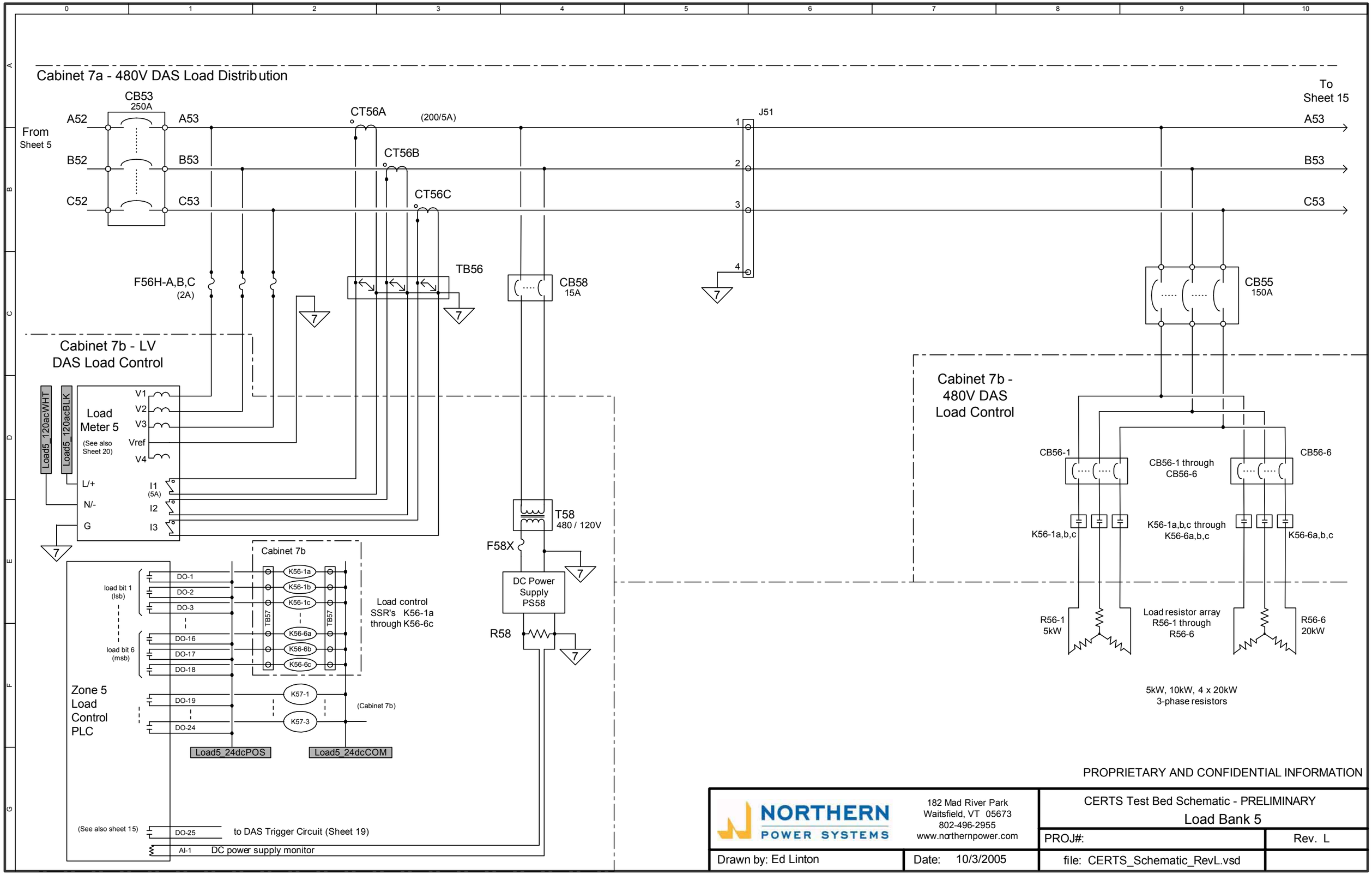

Figure 14: CERTS Test Bed Schematic - Preliminary - Load Bank 5

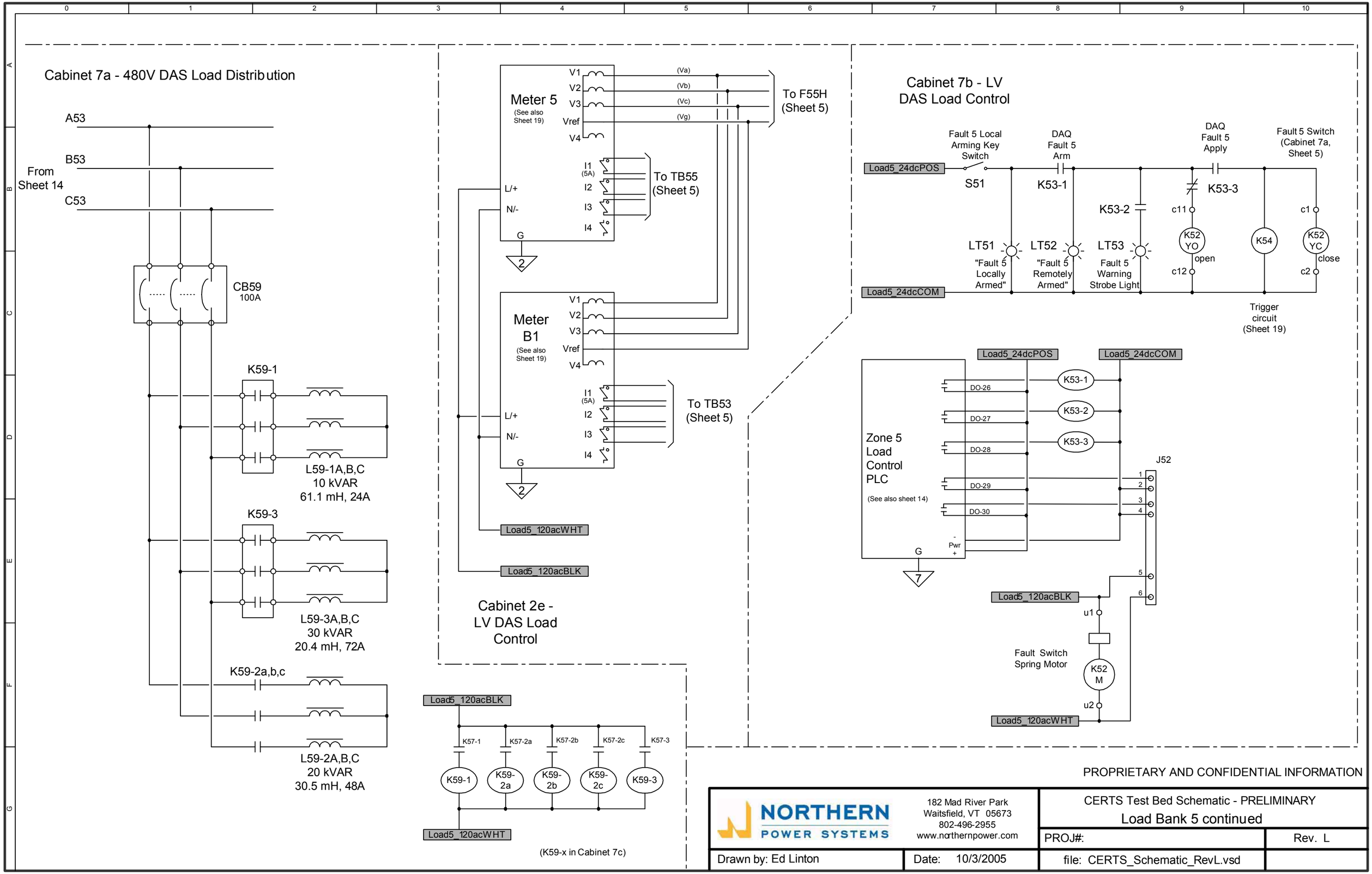

Figure 15: CERTS Test Bed Schematic - Preliminary - Load Bank 5 Continued

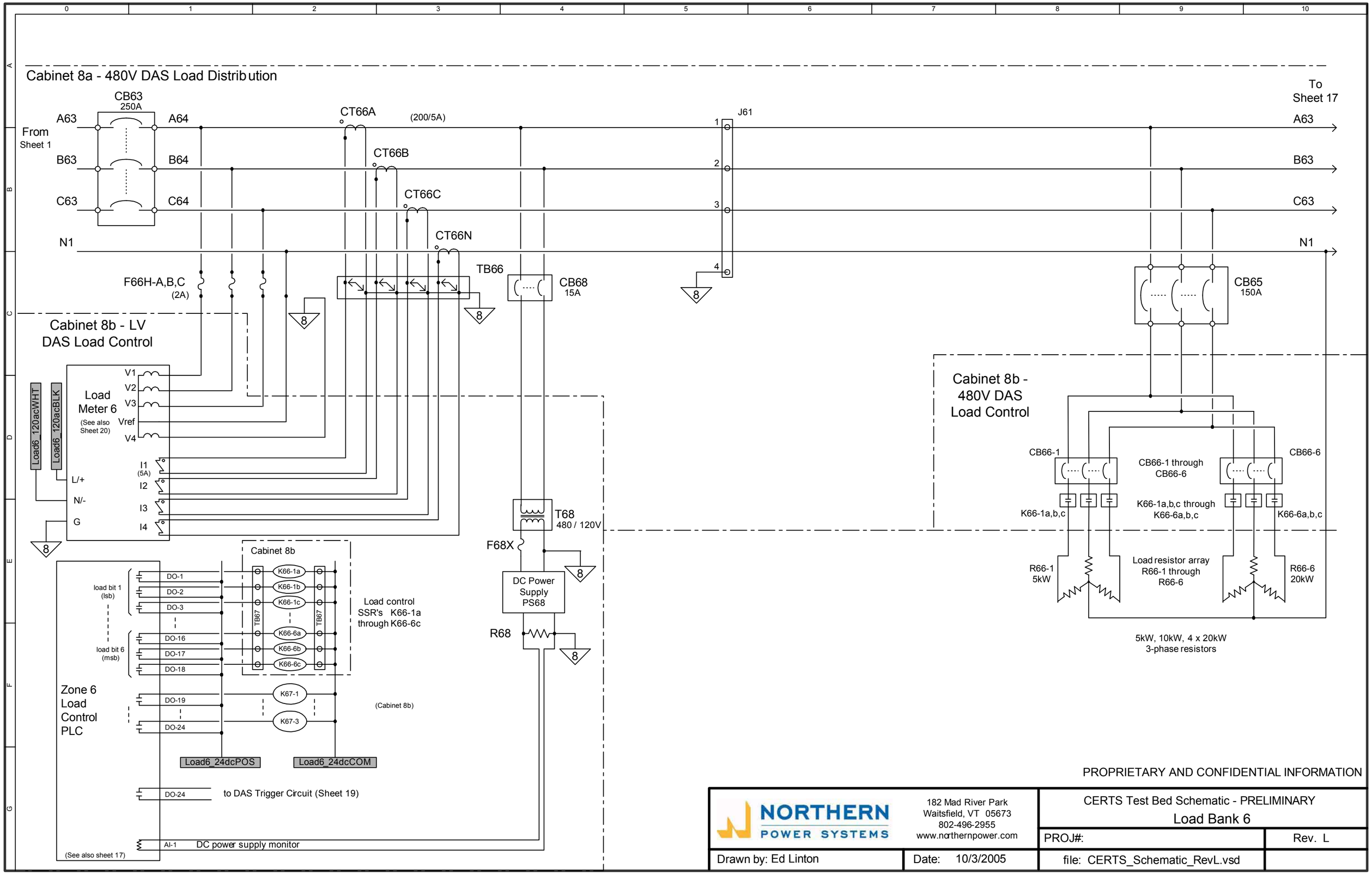

Figure 16: CERTS Test Bed Schematic - Preliminary - Load Bank 6

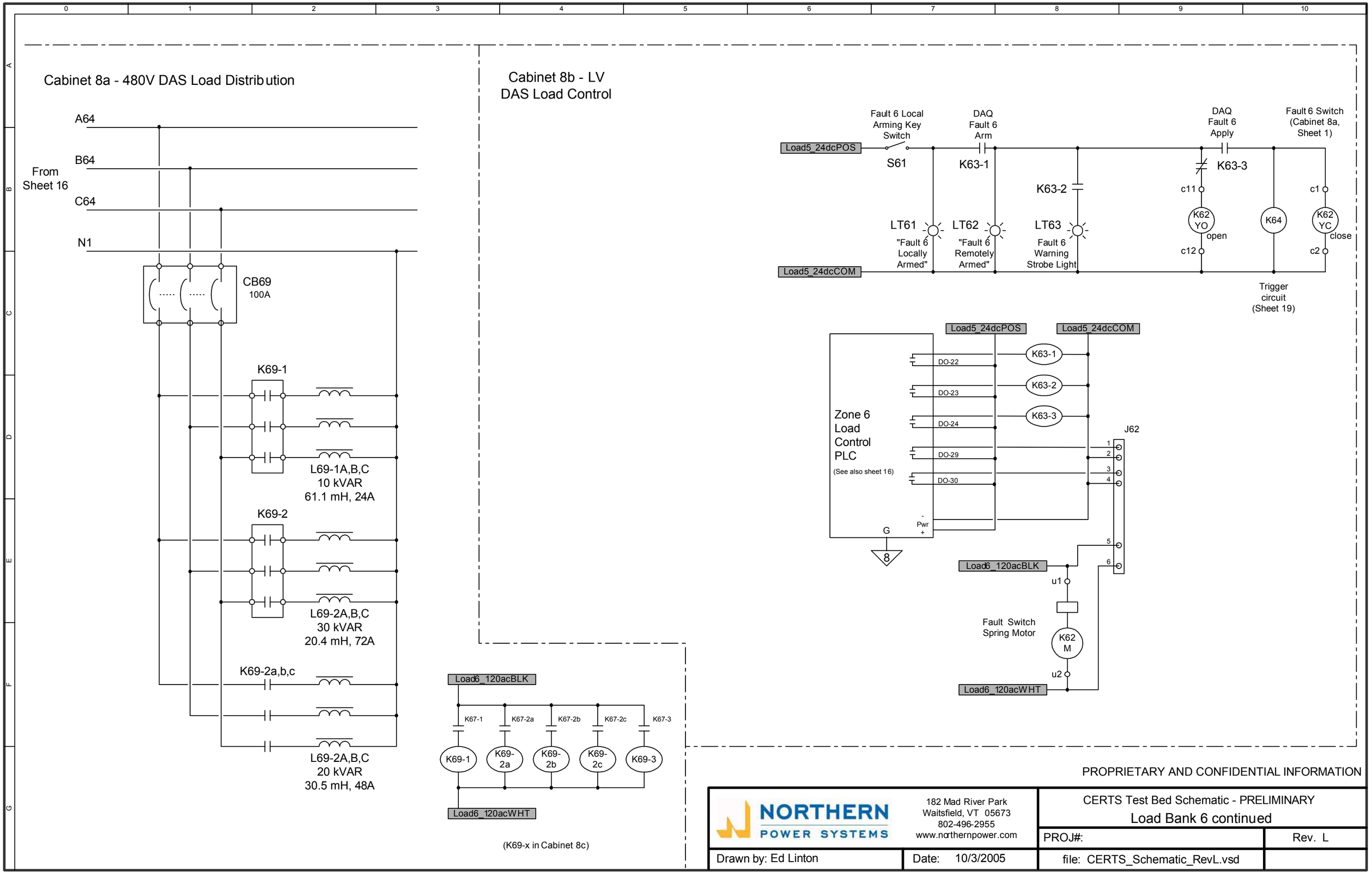

Figure 17: CERTS Test Bed Schematic - Preliminary - Load Bank 6 Continued

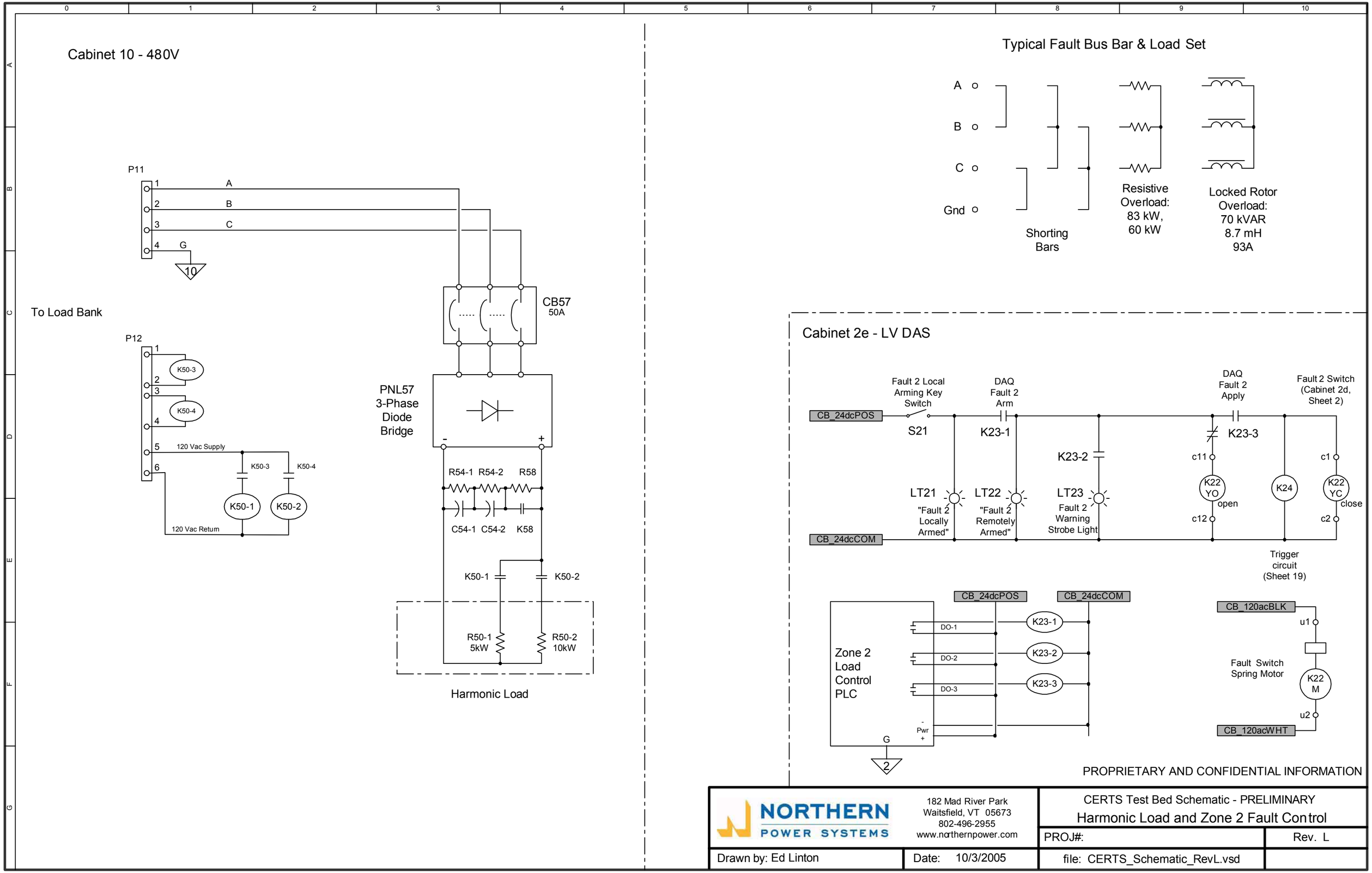

Figure 18: CERTS Test Bed Schematic - Preliminary - Harmonic Load and Zone 2 Fault Control

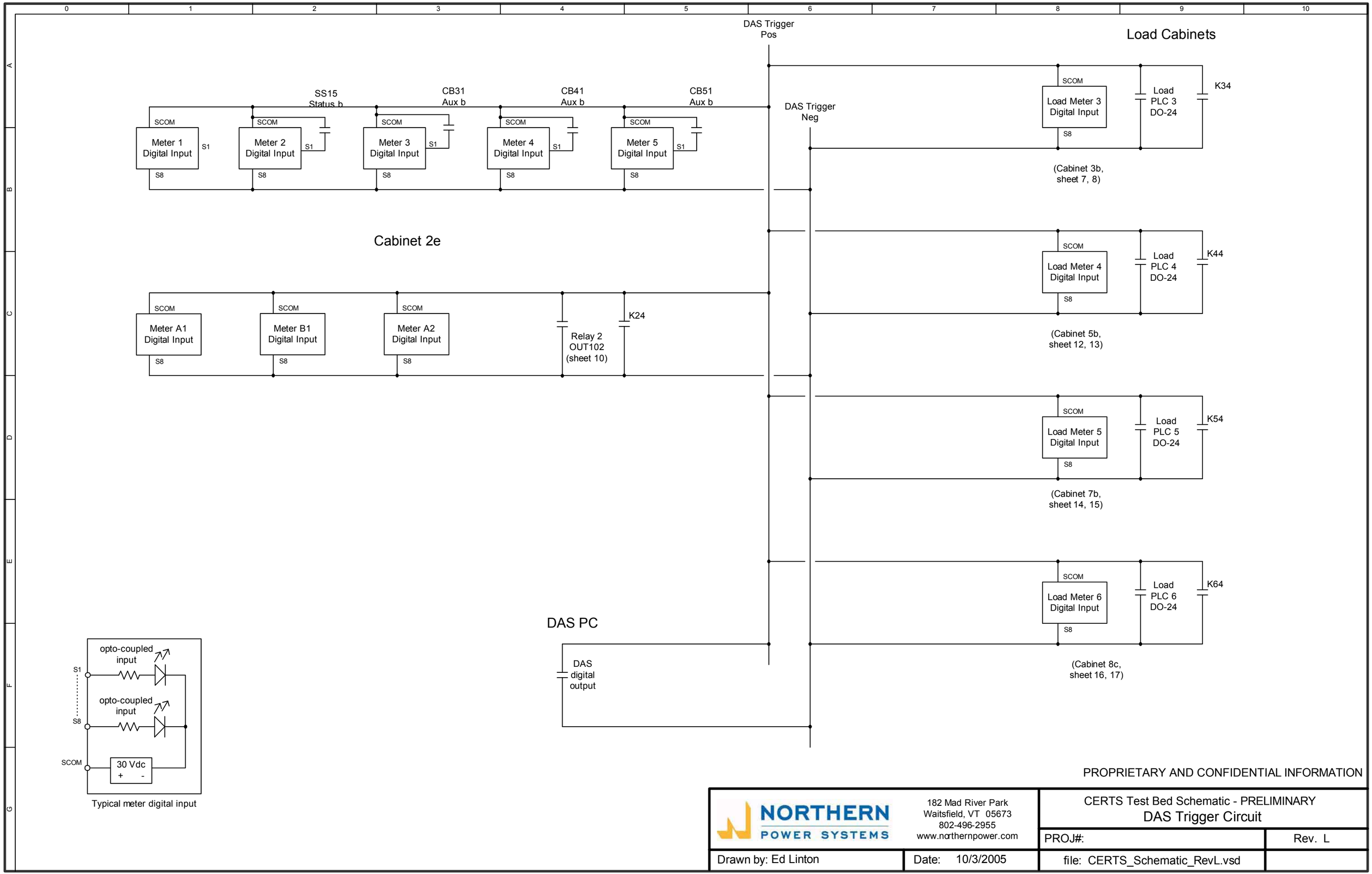

Figure 19: CERTS Test Bed Schematic - Preliminary - DAS Trigger Circuit

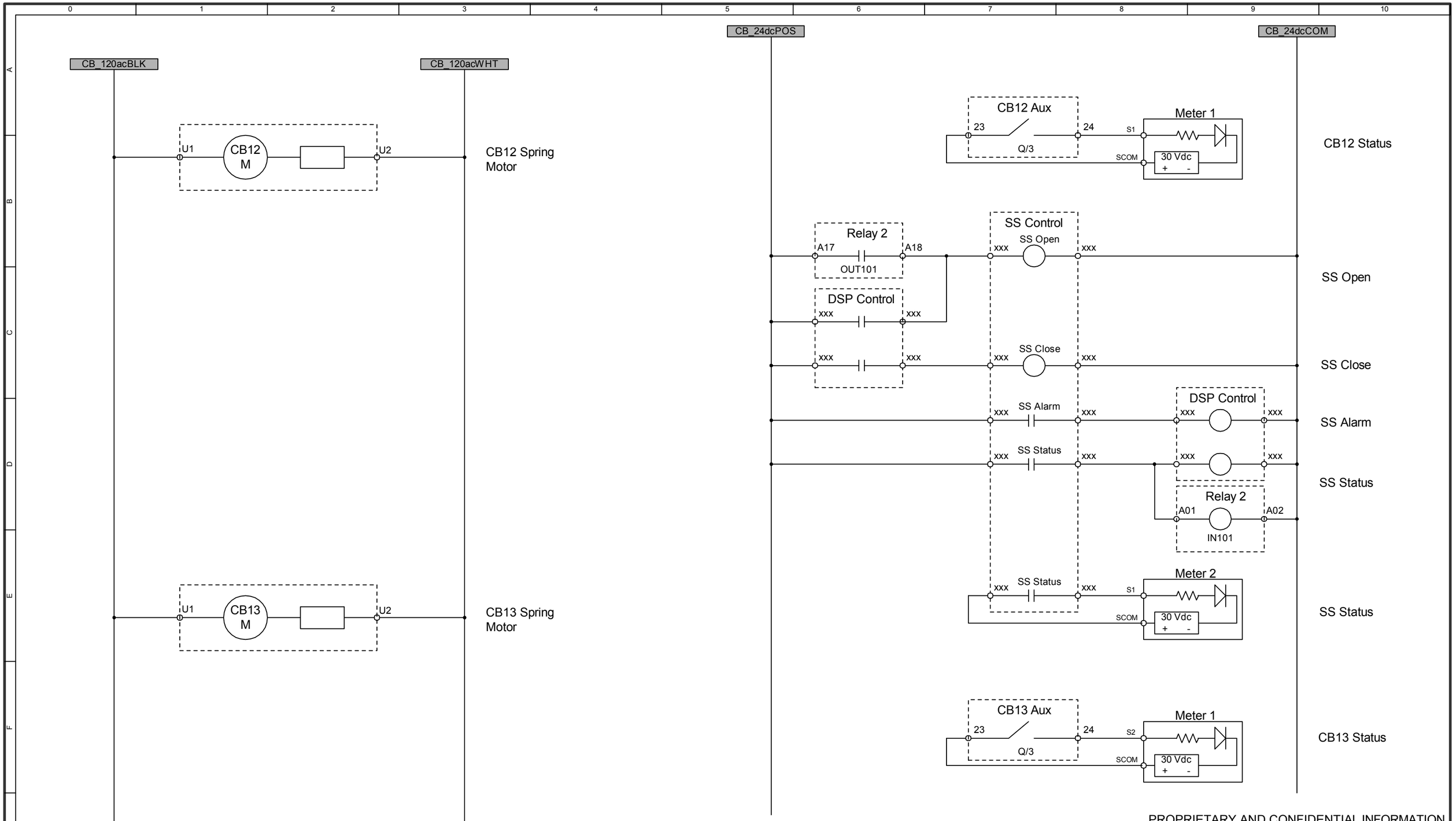

PROPRIETARY AND CONFIDENTIAL INFORMATION

NORTHERN POWER SYSTEMS
182 Mad River Park
Waitsfield, VT 05673
802-496-2955
www.northernpower.com

CERTS Test Bed Schematic - PRELIMINARY
CB Control

PROJ#:
Rev. L

Drawn by: Ed Linton
Date: 10/3/2005
file: CERTS_Schematic_RevL.vsd

Figure 20: CERTS Test Bed Schematic - Preliminary - CB Control

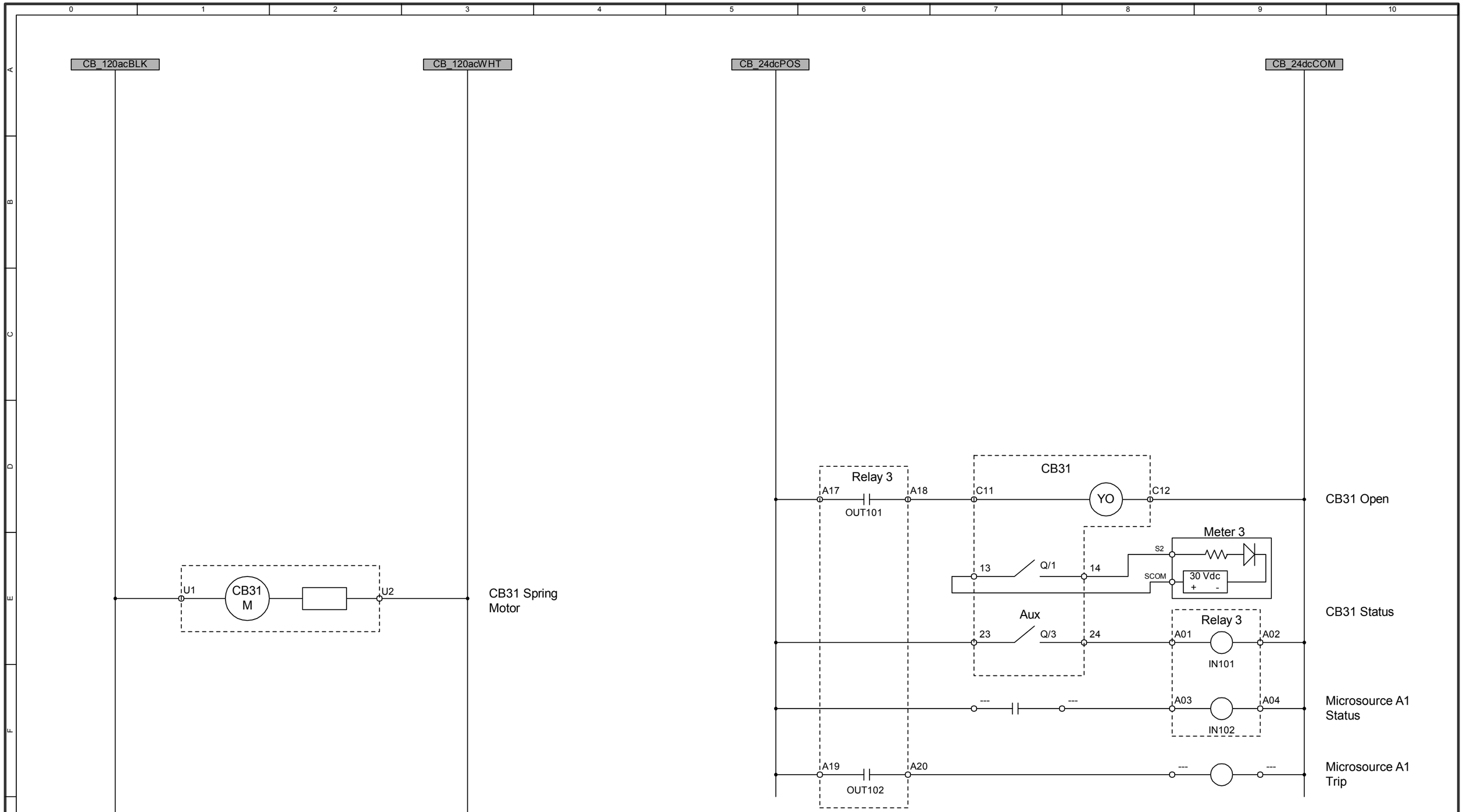

PROPRIETARY AND CONFIDENTIAL INFORMATION

NORTHERN POWER SYSTEMS

182 Mad River Park
Waitsfield, VT 05673
802-496-2955
www.northernpower.com

CERTS Test Bed Schematic - PRELIMINARY

CB Control

PROJ#:

Rev. L

Drawn by: Ed Linton

Date: 10/3/2005

file: CERTS_Schematic_RevL.vsd

Figure 21: CERTS Test Bed Schematic - Preliminary - CB Control

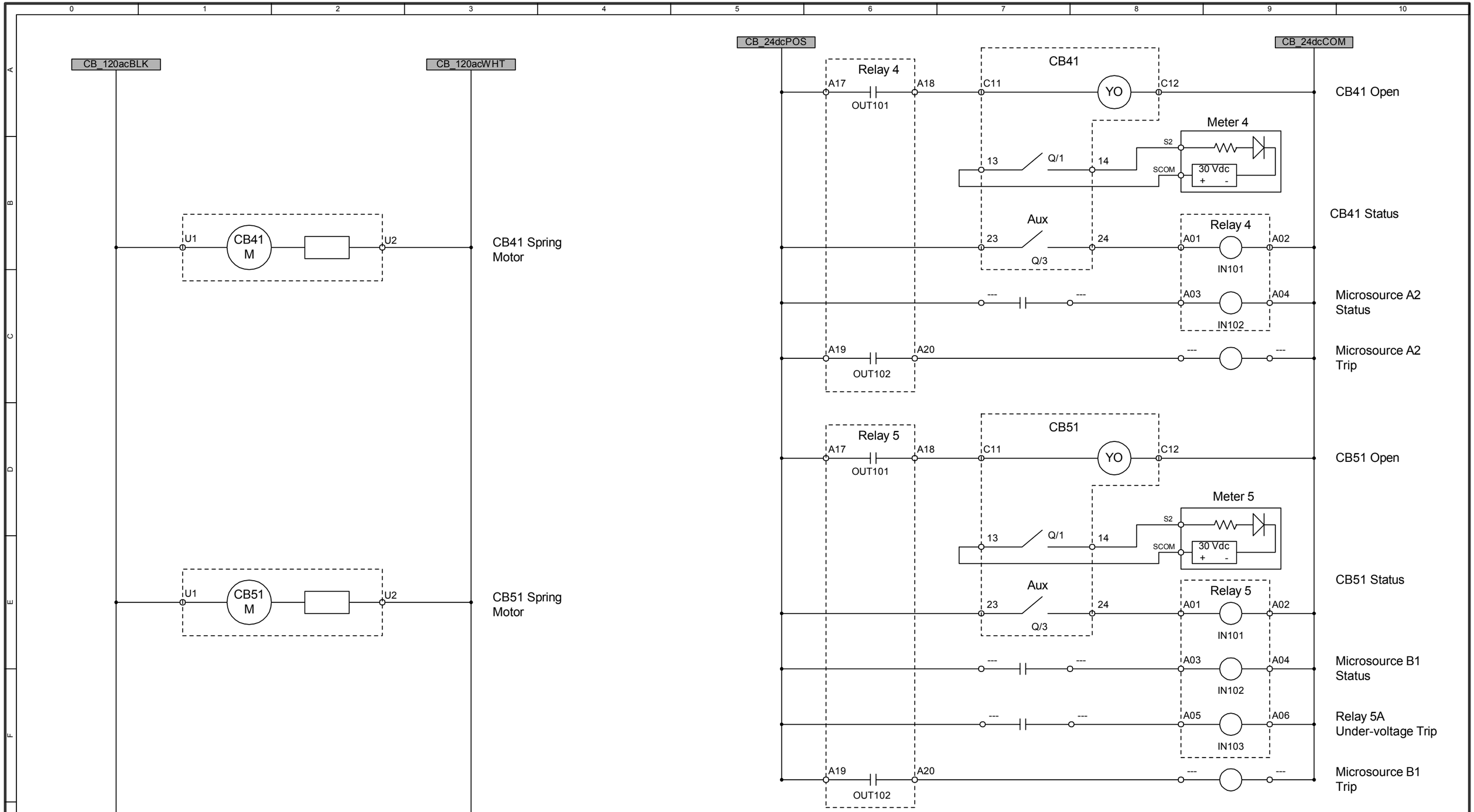

Figure 22: CERTS Test Bed Schematic - Preliminary - CB Control

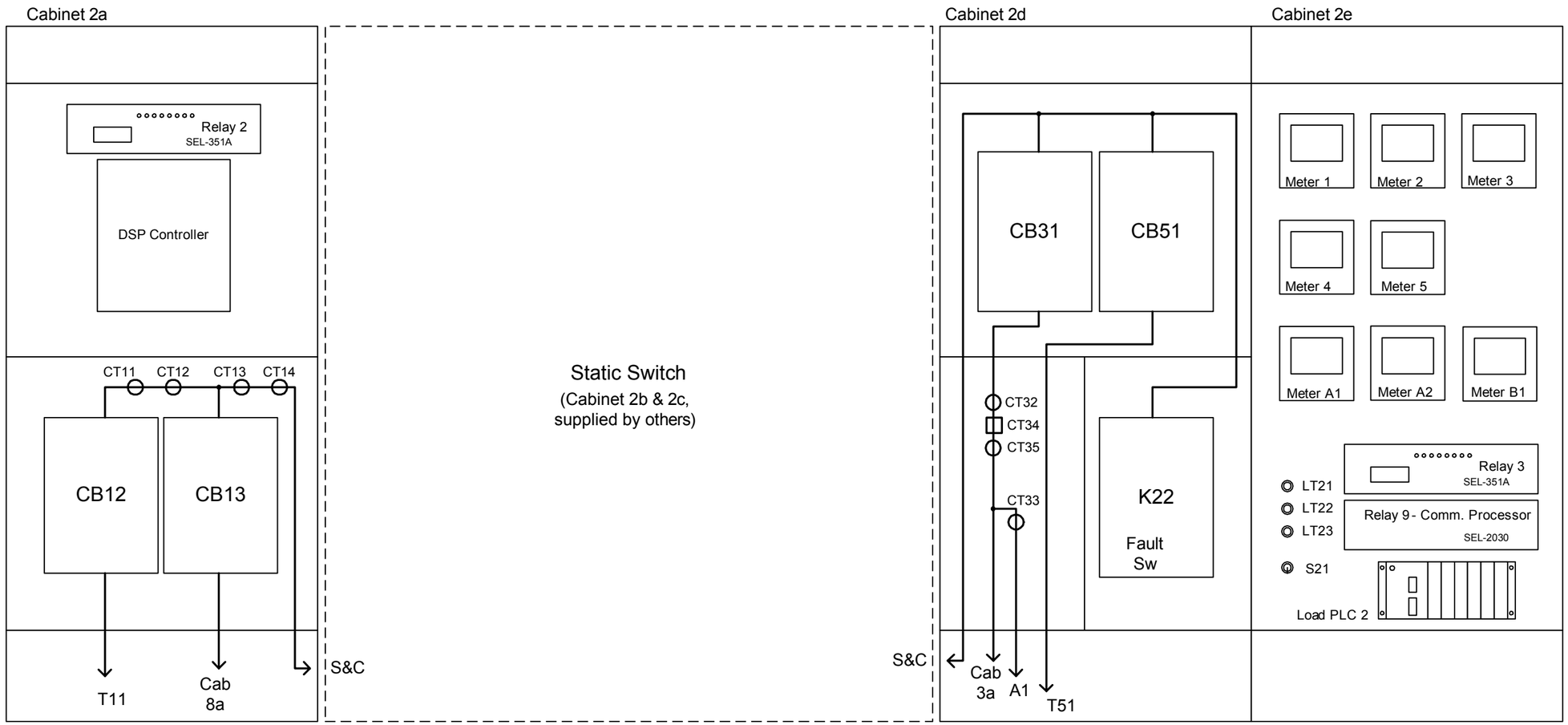

Cabinets also include:

600A bus
- TB11
- TB12
- TB13
- TB14
- PT14
- F14H
- F14X
- F13H
- U2a outlet
- PS2
- FD2

Static switch:
- CB14
- CB16
- CB17

400A bus
- TB32
- TB35
- F35H
- TB33
- F51H
- PT32
- F32H
- F32X
- PT17
- F17H
- F17X

- K23-1,2,3
- K24
- K25
- PS1
- FD1
- Relay 5a
- U2e outlet

10 cm

NORTHERN POWER SYSTEMS	182 Mad River Park Waitsfield, VT 05673 802-496-2955 www.northernpower.com	CERTS Test Bed - Suggested Cabinet Layout
		PROJ#: / Rev. E
Drawn by: Ed Linton	Date: 10/3/2005	file: CERTS_Cabinet_Layout_RevE.vsd

Figure 23: CERTS Test Bed - Suggested Cabinet Layout

Similar Cabinets:

5a	5b
7a	7b
8a	8b

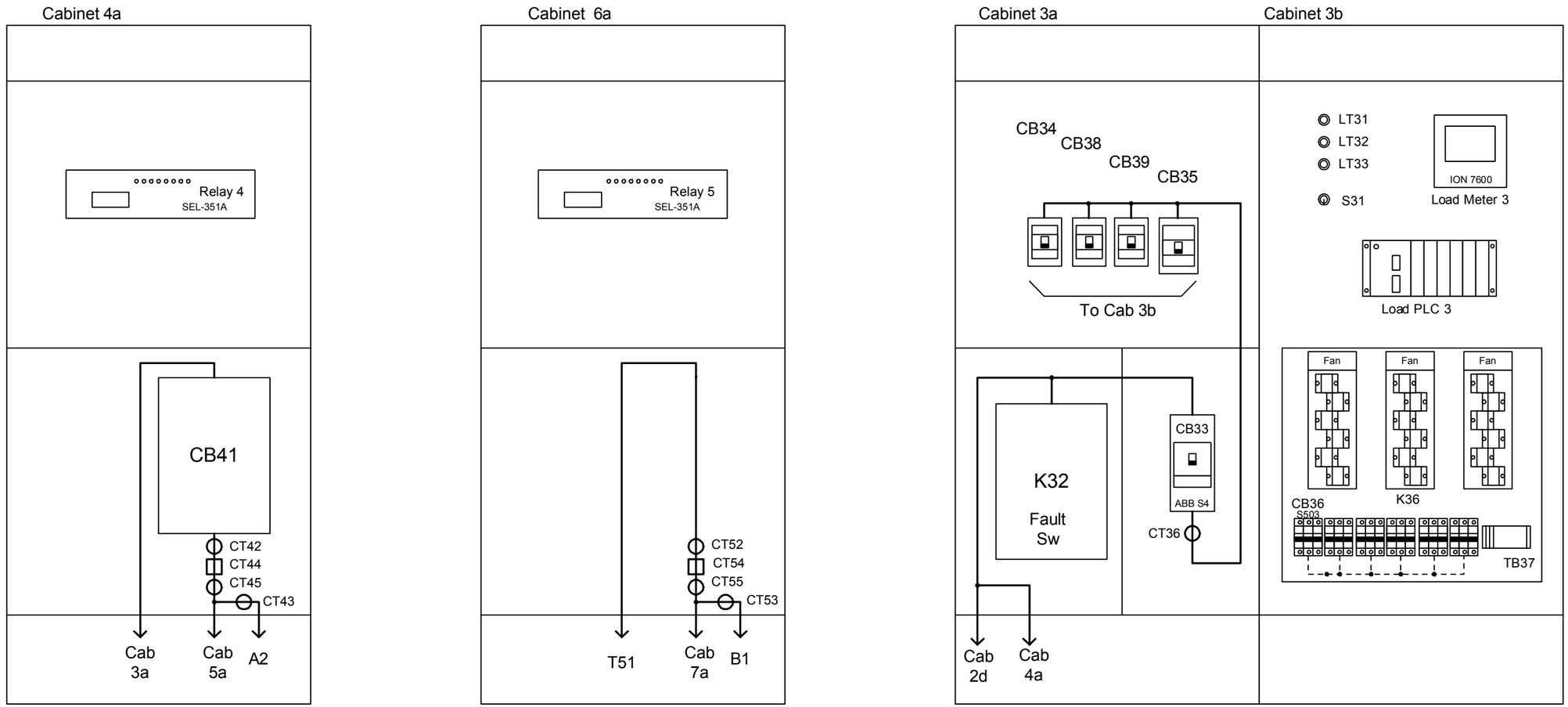

Cabinets also include:

TB42 TB45 F45H TB43 PT42 F42H F42X	225A bus	TB52 TB55 F55H TB53 PT52 F52H F52X	225A bus

TB36 F36H J31 K39-2a,b,c	225A bus	FD3 PS3 K38 K37 K33 K34 K39 MS34 J32

10 cm

NORTHERN POWER SYSTEMS
182 Mad River Park
Waitsfield, VT 05673
802-496-2955
www.northernpower.com

CERTS Test Bed - Suggested Cabinet Layout

		PROJ#:	Rev. E
Drawn by: Ed Linton	Date: 10/3/2005	file: CERTS_Cabinet_Layout_RevE.vsd	

Figure 24: CERTS Test Bed - Suggested Cabinet Layout

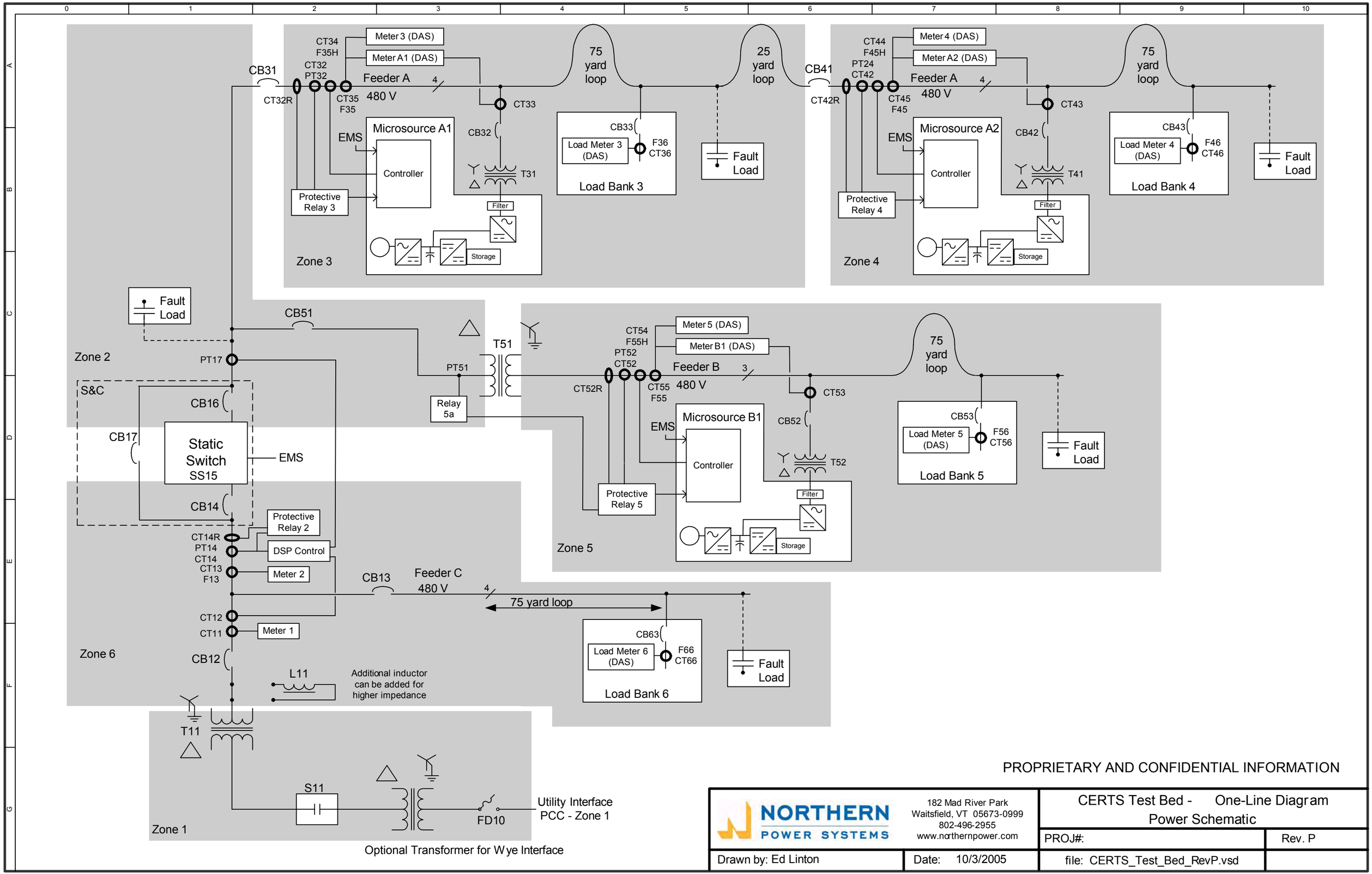

Figure 25: CERTS Test Bed - One-line Diagram - Power Schematic

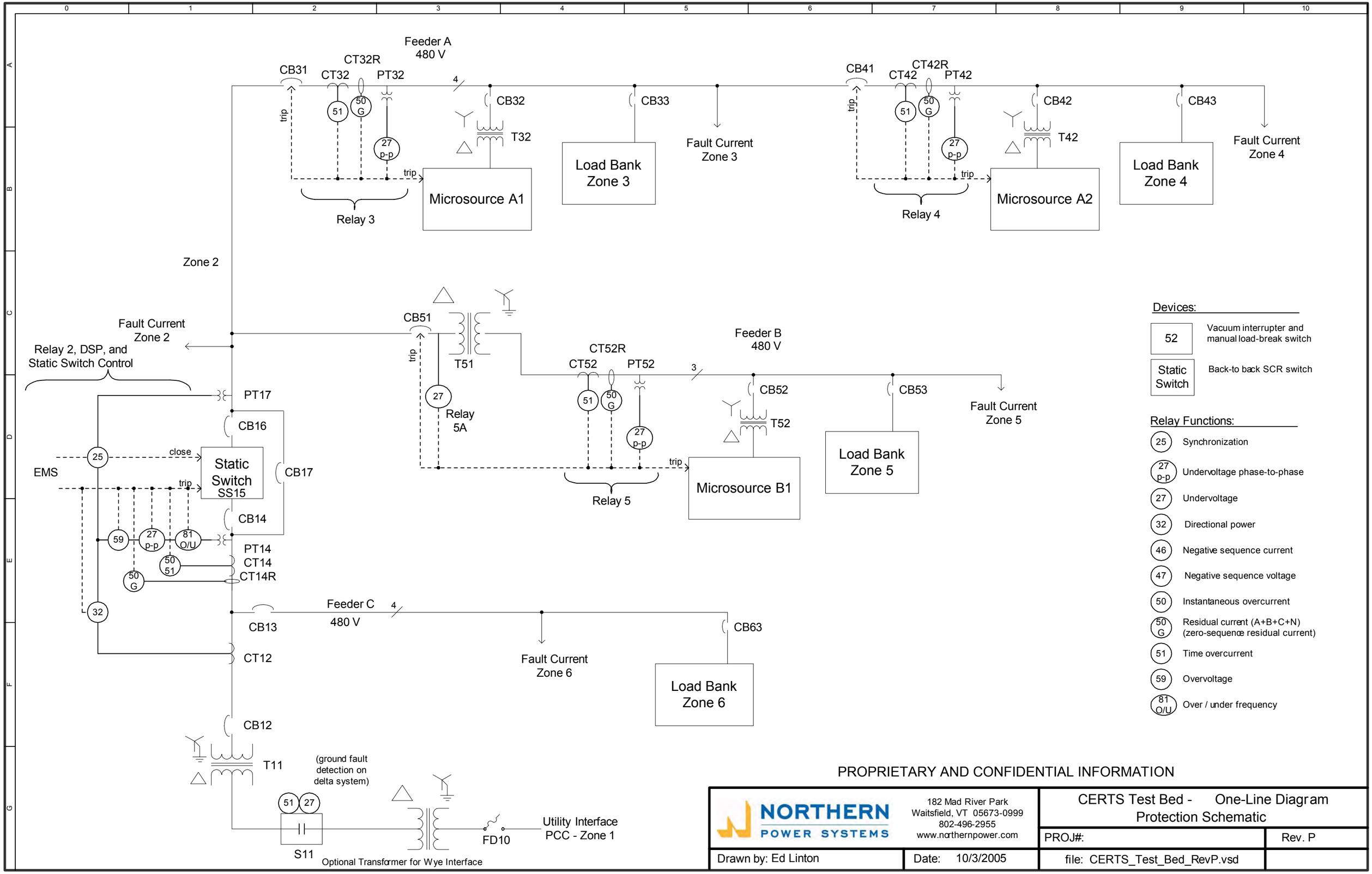

Figure 26: CERTS Test Bed - One-line Diagram - Protection Schematic

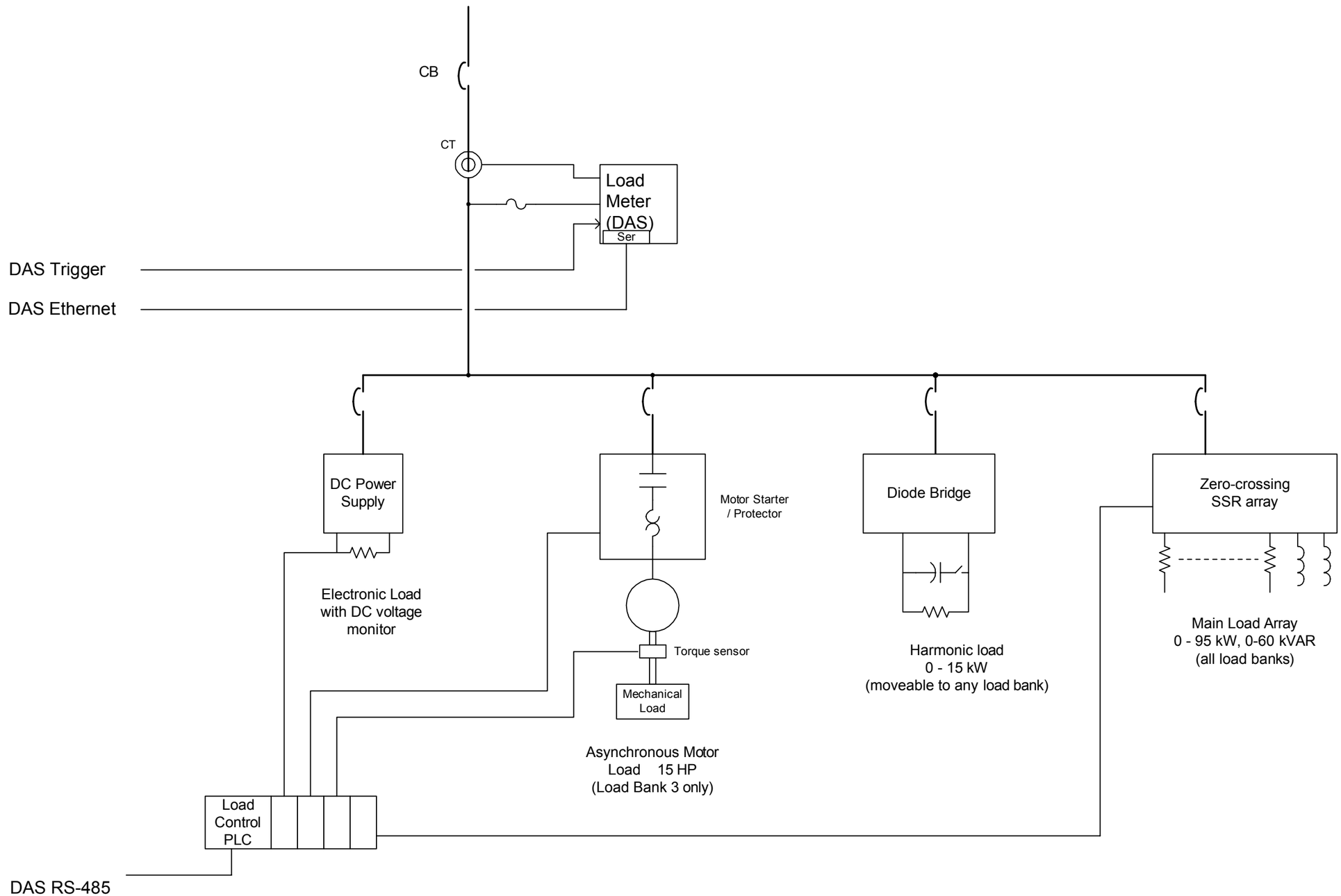

PROPRIETARY AND CONFIDENTIAL INFORMATION

NORTHERN POWER SYSTEMS	182 Mad River Park Waitsfield, VT 05673-0999 802-496-2955 www.northernpower.com	CERTS Test Bed - One-Line Diagram Load Bank Schematic	
		PROJ#:	Rev. P
Drawn by: Ed Linton	Date: 10/3/2005	file: CERTS_Test_Bed_RevP.vsd	

Figure 27: CERTS Test Bed - One-line Diagram - Load Bank Schematic

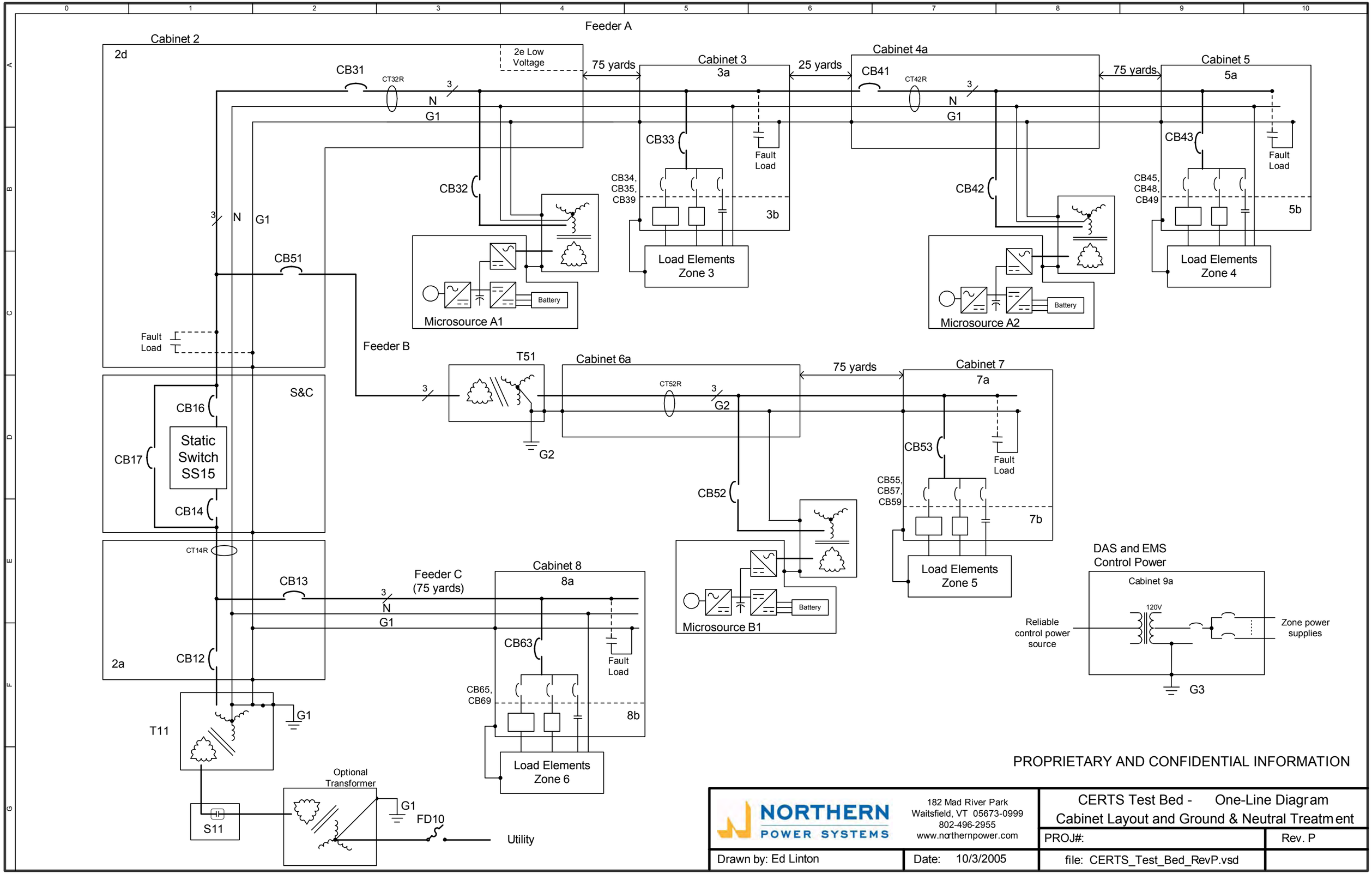

Figure 28: CERTS Test Bed - One-line Diagram - Cabinet Layout and Ground & Neutral Treatment

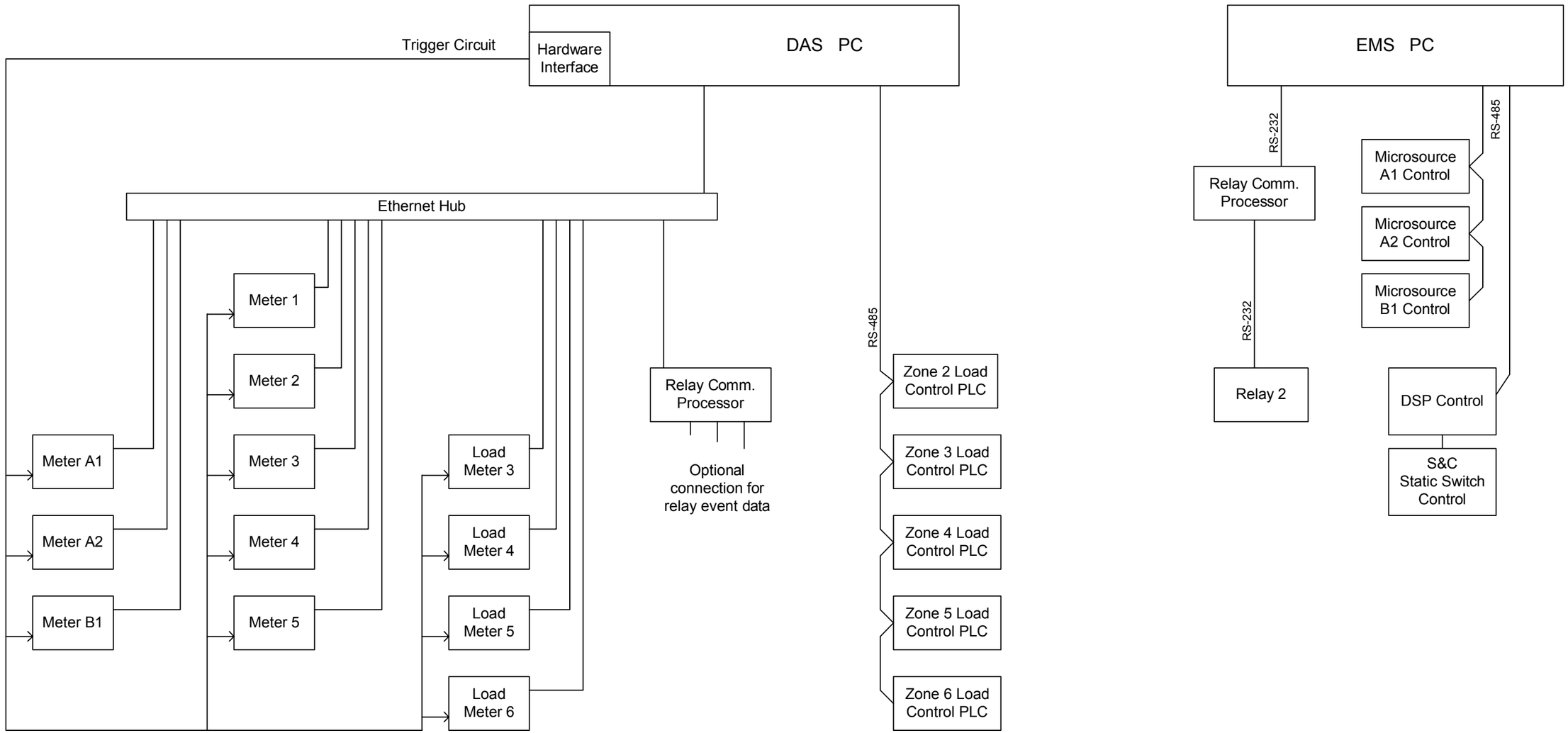

PROPRIETARY AND CONFIDENTIAL INFORMATION

NORTHERN POWER SYSTEMS	182 Mad River Park Waitsfield, VT 05673-0999 802-496-2955 www.northernpower.com	CERTS Test Bed - One-Line Diagram DAS and EMS Communications Architecture
		PROJ#: Rev. P
Drawn by: Ed Linton	Date: 10/3/2005	file: CERTS_Test_Bed_RevP.vsd

Figure 29: CERTS Test Bed - One-line Diagram - DAS and EMS Communications Architecture