Arnold Schwarzenegger
Governor

THERMOCHEMICAL FUEL REFORMING FOR RECIPROCATING INTERNAL COMBUSTION ENGINES

PIER FINAL PROJECT REPORT

Prepared For:
California Energy Commission
Public Interest Energy Research Program

Prepared By:
Gas Technology Institute

January 2011
CEC-500-2009-011

Prepared By:
Gas Technology Institute
Project Manager: John Pratapas
Des Plaines, IL 60018
Commission Contract No. 500-02-014

Prepared For:
Public Interest Energy Research (PIER) Program
California Energy Commission

Jennifer Allen
Contract Manager

Arthur Soinski, Ph.D.
Program Area Lead
Environmentally Preferred Advanced Generation

Kenneth Koyama
Office Manager
Energy Generation And Research Office

Laurie ten Hope
Deputy Director
ENERGY RESEARCH AND DEVELOPMENT DIVISION

Melissa Jones
Executive Director

DISCLAIMER

This report was prepared as the result of work sponsored by the California Energy Commission. It does not necessarily represent the views of the Energy Commission, its employees or the State of California. The Energy Commission, the State of California, its employees, contractors and subcontractors make no warrant, express or implied, and assume no legal liability for the information in this report; nor does any party represent that the uses of this information will not infringe upon privately owned rights. This report has not been approved or disapproved by the California Energy Commission nor has the California Energy Commission passed upon the accuracy or adequacy of the information in this report.

Acknowledgements

This report describes research sponsored by the Electric Power Research Institute (EPRI), California Energy Commission, Utilization Technology Development-NFP, and the Gas Technology Institute.

John M. Pratapas, Gas Technology Institute Project Manager

Principal Investigators:

Dr. Aleksandr Kozlov, Gas Technology Institute

Mark Khinkis, Gas Technology Institute

Dr. Gregory Aronchik, Gas Technology Institute

Dr. Daniel Mather, Digital Engines, LLC

Anton Kozlovsky, Digital Engines, LLC

EPRI Project Manager:

D. Thimsen

Please cite this report as follows:

Pratapas, John. 2009. *Thermochemical Fuel Reforming For Reciprocating Internal Combustion Engines.* California Energy Commission, PIER Environmentally Preferred Advanced Generation. CEC-500-2009-011.

Preface

The California Energy Commission's Public Interest Energy Research (PIER) Program supports public interest energy research and development that will help improve the quality of life in California by bringing environmentally safe, affordable, and reliable energy services and products to the marketplace.

The PIER Program, conducts public interest research, development, and demonstration (RD&D) projects to benefit California.

The PIER Program strives to conduct the most promising public interest energy research by partnering with RD&D entities, including individuals, businesses, utilities, and public or private research institutions.

PIER funding efforts are focused on the following RD&D program areas:

- Buildings End-Use Energy Efficiency
- Energy Innovations Small Grants
- Energy-Related Environmental Research
- Environmentally Preferred Advanced Generation
- Energy Systems Integration
- Industrial/Agricultural/Water End-Use Energy Efficiency
- Renewable Energy Technologies
- Transportation

Thermochemical Fuel Reforming for Reciprocating Internal Combustion Engines is the final report for the Thermochemical Fuel Reforming for Reciprocating Internal Combustion Engines project (contract Number 500-02-014, work authorization number 124) conducted by the Electric Power Research Institute and Gas Technology Institute. The information from this project contributes to the Environmentally Preferred Advanced Generation Program.

For more information about the PIER Program, please visit the Energy Commission's website at www.energy.ca.gov/research or contact the Energy Commission at 916-654-4878.

Table of Contents

Acknowledgements i
Preface iii
Table of Contents iv
1.0 Introduction and Background 5
iv
List of Figures vii
List of Tables ix
Abstract xi
Executive Summary 1
Acronym 71
Definition 71
1.0 Introduction and Background 5
1.1. Internal Combustion Engine Heat Recovery Technologies 5
1.1.1. Combined Cooling, Heating, and Power (CCHP) 6
1.1.2. Turbo-Compounding 6
1.1.3. Rankine Bottoming Cycles 8
1.1.4. Thermochemical Recuperation(TCR) 9
1.2. Project Objectives 11
1.2.1. Design and Laboratory Evaluation and Validation of 3 to 5 kWe Research Scale Recuperative Reforming Reactor 11
1.2.2. Reformate-Fueled Internal Combustion Engine Performance 11
1.3. Technical Approach 12
1.4. Report Organization 12
2.0 Summary of Previous GTI Thermochemical Fuel Reforming Investigations 13
2.1. Hydrogen Enriched Fuel from Thermochemical Fuel Reforming 13
2.1.1. Hydrogen (H_2) Enriched Combustion 13
2.1.2. TCFR System for Supplying Hydrogen to Fuel Blend 15
2.1.3. Engine Analysis 16
2.1.4. Performance Goals/Criteria for Design of TCRS 18
2.1.5. Engine Simulation of TCR Reformed Fuel 18
2.1.6. Biogas and Landfill Gas 23

2.1.7. Summary of 1kWe Laboratory Scale TCFR Tests 25
2.2. TCFR RICE Cost Estimation 30
2.2.1. Approach 30
2.2.2. Key Assumptions 30
2.2.3. TCR System Cost 32
3.0 Summary of Thermochemical Fuel Reforming Technology and Scale-Up Approach 35
3.1. Thermochemical Fuel Reforming Technology Status Summary 35
3.2. Performance Goals/Criteria for Design of TCR System 39
3.3. Conceptual Design of Recuperative Reformer 40
4.0 Laboratory Scale Testing of Recuperative Reforming for Simulated Exhaust from Cummins QSK19G Natural Gas-Fueled Reciprocating Engine 43
4.1. Laboratory Studies of Recuperative Reforming Reactor 43
4.2. Recuperative Reformer 46
4.3. Test Plan 48
4.4. Analysis of Experimental Data 49
4.4.1. Catalytic reforming test results 49
5.0 Operation of 50 kWe Research Engine with Reformed Fuel from TCR Test Rig 55
5.1. Goal and Objectives 55
5.2. Test Plan 55
5.2.1. Test Matrix 57
5.2.2. Test Procedures 58
5.2.3. Engine DAS Measurements and Methods 59
5.2.4. Data Analysis Procedure 60
5.2.5. Quality Assurance Procedures 60
5.2.6. Data Results (July 17-18, 2007 and July 29, 2007) 60
5.3. Computer Simulation of HCCI with Reformulated Fuel 67
5.4. Conclusions 68
6.0 Conclusions and Recommendations 69
6.1. Commercialization Potential 69
6.2. Recommendations 70
6.3. Benefits to California 70
7.0 Glossary 71

Appendix A: Conceptual Design of the Recuperative Reformer for the Cummins 1400 kW QSK60G Engine. 73
Appendix B: Bill of Materials for TCRS RICE-QSK60G 76
Appendix C: Preliminary Analysis of TCR for Landfill Gas and Biogas Applications 77
Appendix D: Photographs of Reformed Fuel Delivery System Components for HCCI Research Engine Tests 833

List of Figures

Figure 1. Energy balance of lean-burn gas engine at typical operating conditions 5
Figure 2. Conceptual schematic flow diagram of a CCHP system 6
Figure 3. Potential net turbocompressor power available 7
Figure 4. Typical turbo-compounding configuration (in distributed generation applications the "powertrain" is an electric generator) 8
Figure 5. Thermochemical recuperation system schematic 10
Figure 6. Schematic of a simplified TCFR system 15
Figure 7. Schematic of the Cummins QSK60G gas engine equipped with the TCR system 17
Figure 8. Process flow diagram of the Cummins QSK60G gas engine equipped with the TCR system 19
Figure 9. Normalized system efficiency versus excess air ratio (λ) for natural gas and TCR reformed fuel 20
Figure 10a. Comparison of normalized system efficiency versus normalized NOx emissions for natural gas and TCR reformed fuel 21
Figure 11. Normalized UHC emissions versus excess air ratio (λ) for natural gas and TCR reformed fuel 22
Figure 12. Turbocharger exhaust outlet temperature as a function of excess air ratio (λ) 22
Figure 13. Laboratory set-up – low temperature methane reforming (recuperative reforming for reciprocating engine) 26
Figure 14. CH_4 conversions versus temperature for pre-reforming catalyst 26
Figure 15. Schematic of the GTI RR experimental test unit 27
Figure 16. GTI laboratory-scale recuperative reformer test cell 28
Figure 17. TCRS system assembly and components for cost estimation 32
Figure 18. Simplified flow diagram for Cummins QSK19G lean burn engine without TCR 37
Figure 19. Sankey diagram of QSK19G lean burn engine without TCR 37
Figure 20. Simplified flow diagram of Cummins QSK19G lean burn engine with recuperative reformer after turbocharger 38
Figure 21. Sankey diagram for QSK19 lean burn engine with steam/natural gas reforming (reformer after turbocharger) 39
Figure 22. Conceptual design of thermochemical recuperation system for QSK19G engine 41
Figure 23. Conceptual design of recuperative reformer for QSK19G engine 41
Figure 24. Schematic of laboratory setup for 250 SCFH TCR test rig 44

Figure 25. Photograph of laboratory setup for 250 SCFH TCR test rig 45
Figure 26. Drawing of eclipse recuperators installed on TCR test rig 46
Figure 27. Eclipse recuperator (recuperative reformer) with catalytic inserts installed 46
Figure 28. Photographs of catalytic inserts evaluated in TCR test rig 47
Figure 29. Photograph of an individual nickel oxide catalyst disc 48
Figure 30. Equilibrium composition for natural gas/steam reforming (steam/carbon=2) 50
Figure 31. Methane conversion rate by equilibrium 51
Figure 32. Reforming process completeness vs. space velocity (at standard) 52
Figure 33. Measured hydrogen volume concentration in reformed fuel compared to equilibrium predictions 53
Figure 34: Simplified Flow Diagram of the Reformed Fuel Delivery System 56
Figure 35. HCCI H_2/Natural gas engine test bench-setup for flow control and data measurement/acquisition system 56
Figure 36. Engine map of test points completed 67
Figure 37. Simulated and the experimental pressure for the last run condition of Table 25 68

Figure A-1. Alternative reformer tube designs 74
Figure A-2. Recuperative reformer for 60 liter engine 75
Figure C-1. Flow diagram for landfill gas lean burn QSK19 engine 79
Figure C-2. Sankey diagram for landfill gas lean burn QSK19 engine 80
Figure C-3. Flow diagram for landfill gas lean burn QSK19 engine with TCR 81
Figure D- 1. Fuel compressor with filter 83
Figure D-2. Cooler/condenser (black vertical tube) 83
Figure D-3. Reformed fuel line (yellow) connection to the engine 84
Figure D-4. Natural gas line with flow controller, pressure gauge, and valves 84
Figure D-5. Comparison of flames generated by supplemental burner for TCR testing (a) combusting of neat natural gas and (b) combusting reformed fuel from TCR test rig 85
Figure D-6. Absorber tube (in the foreground) for sulfur removal from natural gas supplied to TCR test rig 85

List of Tables

Table 1. Advantages and disadvantages of H_2-enriched natural gas combustion 13
Table 2. Thermodynamic equilibrium calculation for simplified TCRF system 16
Table 3. Specification of Cummins QSK60G lean-burn gas engine 16
Table 4. US DOE ARES goals 17
Table 5. Compositions of natural gas and HYSYS-calculated reformed fuel (mol %) 19
Table 6. Reformed biogas fuel properties Table 7. Reformed landfill gas properties 23
Table 8. Engine performance and emissions comparison-landfill gas 24
Table 9. Engine performance and emissions comparison-biogas 24
Table 10. Experimental test conditions 29
Table 11. Experimental reformate flow (test conditions in Table 10) 30
Table 12. TCRS cost estimates for Cummins QSK60G generator set 33
Table 13. Reference natural gas composition for engine/reformer modeling 35
Table 14. QSK19 lean burn engine characteristics without TCR (rated speed 1800 rpm) 36
Table 15. Preliminary Test Plan Matrix 49
Table 16. Hydrogen content (% volume, dry basis) in reformed fuel 53
Table 17. Operating conditions for HCCI test engine 57
Table 18. Predicted compositions and reformed fuel flow rates of reformed fuel at different reformer temperatures (steam to carbon=2) 58
Table 19. Proposed test matrix for the HCCI engine with reformed fuel 58
Table 20. Data taken on line natural gas 61
Table 21. Data at 2.0 bar, 2.4% hydrogen 62
Table 22. Data at 2.0 bar, 15% hydrogen 63
Table 23. Data at 2.0 bar, 7.5% hydrogen in reformed fuel 64
Table 24. Data at 2.0 bar, 25% hydrogen in reformed fuel 65
Table 25. Data at 2.5 bar 66

Table A-1. Temperature and pressure drops for alternative catalysts 74
Table C-1. Engine parameters for natural gas and landfill gas engines 78
Table C-2. Heat balance (modeling) 79
Table C-3. Parameters of engine and TCR 80
Table C-4. Predicted parameters of engine with TCR 81
Table C-5. Predicted parameters at characteristic points in system flow diagram 82

Table C-6. Heat balance of engine with TCR (HYSYS modeling) 82

Abstract

Thermochemical recuperation may be considered as an alternative to combined heat and power as a measure to increase the efficiency of an engine. Exhaust heat from an internal combustion engine, along with a catalyst, is used to reform fuel such as natural gas into a fuel stream with a significant concentration of hydrogen and a higher caloric value. This technique of recycling the engine exhaust heat and converting it to chemical energy in the fuel stream can reduce engine fuel use. In addition, the combustion of hydrogen-enhanced fuel allows the engine to operate at an air-to-fuel ratio that results in very low production of nitrogen oxides.

Included in this report is a summary of prior research and development by the Gas Technology Institute on the technology of thermochemical recuperation for reciprocating gas engines used in distributed generation; a preliminary conceptual design of a recuperative reformer for a commercially available 331-kilowatt engine generating set offered by Cummins, Inc.; a description of laboratory scale experiments; updated performance predictions; and the results from operating a 50-kilowatt research engine on thermochemically reformed fuel versus natural gas. Project results support recommendations for the scale-up (an increase according to a fixed ratio) and continued development, demonstration, and commercialization of thermochemical fuel reforming for reciprocating internal combustion engines.

A thermochemical fuel reforming system could reasonably result in fuel savings of about $1.1 million per year by the fifth year of commercialization. This addresses the California Energy Commission's goals of enhancing energy efficiency, diversifying electricity supplies by investing in renewable and other clean energy technologies, strengthening California's energy infrastructure.

Keywords: Thermochemical fuel reforming, thermochemical recuperation, recuperative reforming reactor, distributed generation, combined heat and power, hydrogen-enhanced combustion, natural gas, biogas, reciprocating internal combustion engine

Executive Summary

Introduction

Thermochemical recuperation uses engine exhaust in an innovative way to increase efficiency and lower emissions of reciprocating internal combustion engines. Available waste heat from the engine exhaust is used to thermally convert natural gas into a fuel stream with a concentration of hydrogen and a higher caloric value. A catalyst is used to speed up the fuel conversions. The waste heat's thermal energy is recuperated as chemical energy in the fuel stream.

The major equipment used for thermochemical recuperation includes heat exchangers, a recuperative reforming reactor, and a heat recovery steam generator. The recuperative reforming reactor uses the waste heat to reform the natural gas. Because the waste heat is at a relatively low temperature, catalysts are used in the reforming reactor to speed up the reaction and achieve target conversions in a shorter time. The steam and exhaust gases provide the water and heat required to support the reforming reactions.

Overall, the reforming reactions require the addition of energy (endothermic) for the reaction to go forward. In a thermochemical reforming system, the energy to drive the reactions is provided by heat transfered from the hot engine exhaust. Efficiency increases with the amount of exhaust heat that can be successfully used to drive the endothermic reforming reactions.

The hydrogen produced by thermochemical reforming offers many advantages as a primary fuel or in a fuel gas mixture. Peak flame temperatures can be moderated by using more air than is required for complete combustion of the fuel or by recirculating a portion of an engine's exhaust gas back to the engine (exhaust gas recirculation). This results in lower nitrogen oxides emissions. Hydrogen-enriched combustion has been shown, in laboratory testing, to extend the tolerance for exhaust gas recirculation of natural gas engines. The net benefit of thermochemical reforming is that less natural gas is required to generate a given engine power output.

Purpose

This collaborative project developed and demonstrated, at laboratory scale, thermochemical fuel reforming for achieving ultra-low emissions levels required for clean distributed generation in California. The research included experiments to confirm that waste heat from reciprocating internal combustion engines could be used for reforming natural gas supplied to the engine. It was also the intent to validate that the high hydrogen content of the reformed fuel would allow combustion in the engine to be optimized for ultra-low emissions of nitrogen oxides, carbon monoxide, and unburned hydrocarbons. The research would also showed that the increase in system efficiency reduces natural gas consumption compared to the baseline engine operated on unreformed natural gas.

Project Objectives

- Develop a detailed engineering design of a recuperative reforming reactor to convert natural gas and yield hydrogen in amounts corresponding to fuel flow and exhaust conditions for a 50-kilowatt gas engine in the laboratory.
- Operate a 50-kilowatt laboratory-scale engine on reformed fuel produced from a thermochemical recuperation laboratory test rig. This testing will confirm satisfactory operation within generally accepted design parameters for reciprocating internal combustion engines, and document fuel savings and emissions (and emission reductions) of nitrogen oxides, carbon monoxide, and volatile organic compounds.
- Develop the basis for an engineering design to scale-up (increase according to a fixed ratio) the laboratory-scale thermochemical recuperation technology in subsequent development and demonstration projects.

Project Outcomes

- This project resulted in scale-up of a recuperative, catalytic reforming reactor from a natural gas flow rate of 50 to more than 250 standard cubic feet per hour. A commercially available "tube and shell" designed gas-to-gas recuperator was modified to include provisions for adding the catalyst inside the tubes where the natural gas and steam mixture flow. Heat transfer and process models developed by Gas Technology Institute provided predictions of performance of the recuperative reformer. These predictions were confirmed experimentally on the laboratory unit.
- The scaled-up recuperative reformer was operated at exhaust gas temperatures and conditions simulating the Cummins QSK19G lean-burn engine and produced enough reformed fuel to operate a 50 kilowatt research engine. Engine performance and emissions of the engine operated on reformed fuel were measured and compared to operation of the engine on pipeline quality natural gas.
- The research team prepared a preliminary conceptual design of a recuperative reformer for the Cummins QSK19G engine configuration evaluated in this project. This design provides a perspective on its potential physical size and operating temperatures and flow rates at the current state of development for thermochemical fuel reforming.

Conclusions

- The testing of the laboratory scale recuperative reforming reactor at temperatures that simulated exhaust from reciprocating engine (operated under lean-burn conditions on natural gas) suggests that a nickel-rhodium reforming catalyst provided the highest conversion of natural gas/steam mixture at steam to carbon ratio of 2. The residence times (time spent inside the system) required to achieve different levels of reforming (measured by hydrogen yield) could be experimentally determined for use in developing a design model of thermochemical recuperation.
- The 50-kilowatt laboratory-scale engine (configured for homogeneous charge compression ignition [a form of internal combustion in which well-mixed fuel and

oxidizer are compressed to the point of auto-ignition] instead of spark ignition [the initiation of the combustion process of the air-fuel mixture is ignited within the combustion chamber by a spark from a spark plug] configuration) was operated on reformed fuel produced in the laboratory thermochemical recuperator test rig and provided sufficient data to compare key performance parameters and emissions versus conventional engine operation (also with homogeneous charge compression ignition and operated on pipeline natural gas). Testing suggested that the thermochemical recuperation test rig, as currently operated, would not produce sufficient reformed fuel to enable operation of the test engine in a spark ignition configuration. It was not within the scope of the task to optimize the engine's operation on reformed fuel. Nevertheless, the data obtained from testing supports the technical feasibility that thermochemical recuperation on a reciprocating engine could be used to increase overall system efficiency. The limited testing suggested that for the homogeneous charge compression ignition configuration, the engine efficiency (brake thermal) on reformed fuel was comparable to the already high baseline efficiency on natural gas. Engine operation with homogeneous charge compression ignition on reformed fuel resulted in lower hydrocarbon emissions compared to the emissions for the same engine operated with unreformed natural gas. Because of the extremely lean combustion associated with homogeneous charge compression ignition, the baseline nitrogen oxides emissions on natural gas were already very low. In some cases the reformed fuel resulted in slightly higher nitrogen oxides. Further optimization between nitrogen oxides and carbon monoxide tradeoff is warranted.

- The research team developed a conceptual design of a tubular recuperative reformer for the Cummins QSK19G reciprocating internal combustion engine. This design provides an indication of the overall dimensions of the recuperative reformer for the 331-kilowatt engine.

Recommendations

- Based upon the results of the work reported in this project, the research team recommends development of a thermochemical recuperation system for reciprocating internal combustion engines be continued.
- Because of the extensive amount of thermochemical recuperation process modeling performed to date that is based upon the Cummins QSK19 engine configurations (that is lean burn and stoichiometric, natural gas and biogas), the research team recommends continuing thermochemical recuperation development and demonstration with Cummins.

Benefits to California

- This project addresses the Public Interest Energy Research Program's goals of enhancing energy efficiency, diversifying electricity supplies by investing in renewable and other clean energy technologies, strengthening California's energy infrastructure to provide for reliability, and continuing California's environmental stewardship.

- A thermochemical fuel reforming system could reasonably result in a 5% reduction in overall system heat rate compared to the currently available engine-generator set. At a 5% reduction in fuel purchase and an assumed California market penetration rate of about 50 megawatts by the fifth year of commercialization, the projected fuel savings are estimated at about $1.1 million per year (at a price of $7 per million British thermal units for natural gas).
- Because thermochemical fuel reforming produces hydrogen-enriched fuel that has been documented to extend the limits of a reciprocating internal combustion engine to operate in lean combustion mode, one could potentially use thermochemical recuperation for significant reduction of nitrogen oxides without exacerbating emissions of carbon monoxide and unburned hydrocarbons.
- Preliminary modeling analyses suggest that thermochemical fuel reforming can also be applied to increase efficiency and reduce emissions from engines fueled with biogas or landfill gas. This supports attainment of the California Energy Commission Public Interest Energy Research goal of diversifying electricity supplies by investing in renewable and other clean energy technology.
- The California Air Resources Board 2007 emission limits for distributed generation could preclude a future market for reciprocating internal combustion engine systems unless they can demonstrate the capability to cost-effectively meet these limits. Thermochemical fuel reforming may provide a means for continued use of reciprocating internal combustion engines as prime movers for distributed generation in Southern California.
- Increasing electric power generation efficiency and minimizing the cost of complying with the California Air Resources Board 2007 emissions limits for distributed generation will contribute to a more cost-competitive California economy.

1.0 Introduction and Background

1.1. Internal Combustion Engine Heat Recovery Technologies

The natural gas-fired reciprocating engine has been the prime mover of choice for the majority of recent distributed generation (DG) installations in the 1,000 kilowatt-electric (kWe) to 10,000 kWe output range. Reciprocating engines also drive a significant share of the existing capacity of compressors for natural gas transmission.

Regulators continue to reduce the allowable emission of oxides of nitrogen (NOx) from gas engines. In California, Texas, New Jersey, and in other serious to severe ozone non-attainment areas, single-digit parts per million NOx limits are leading to increased installations of selective catalytic reduction (SCR) at significant cost. This is having a substantial impact on the operating economics of DG. While combined heat and power (CHP) can increase fuel utilization efficiencies to around 80%, not all applications for distributed energy can take advantage of CHP. Therefore, a need exists to increase the efficiency, while also lowering the emissions of natural gas reciprocating engines used in DG and pipeline transmission systems.

Figure 1 shows a typical energy balance of the modern natural gas reciprocating engine. About 32% of the energy input (higher heating value) is available in the exhaust gases from the engine. The temperature of this exhaust can be greater than 500°C. Recovering and utilizing this energy would improve efficiency and reduce emissions per unit output. A description of several strategies for utilizing this exhaust heat is described below.

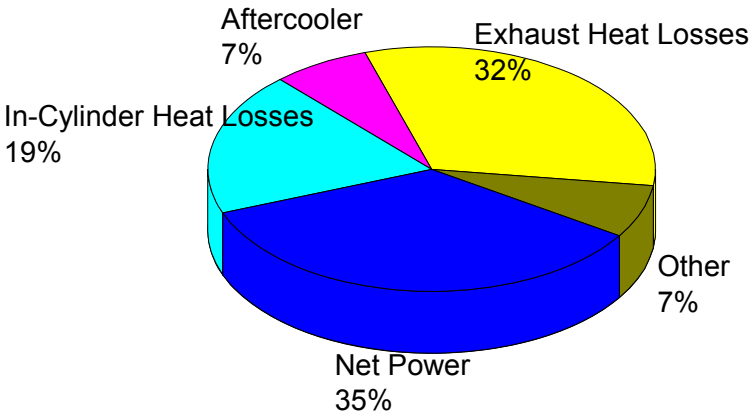

Figure 1. Energy balance of lean-burn gas engine at typical operating conditions

Source: Gas Technology Institute

1.1.1. Combined Cooling, Heating, and Power (CCHP)[1]

CCHP is an integrated system located at or near a building or facility where the heat co-produced by the electric (or shaft) power generation equipment provides heating, cooling, and/or dehumidification to a building and/or industrial processes. A conceptual diagram of CCHP is shown in **Figure 2**. The major CHP components are prime mover technologies, heat recovery technologies, and thermally activated technologies.

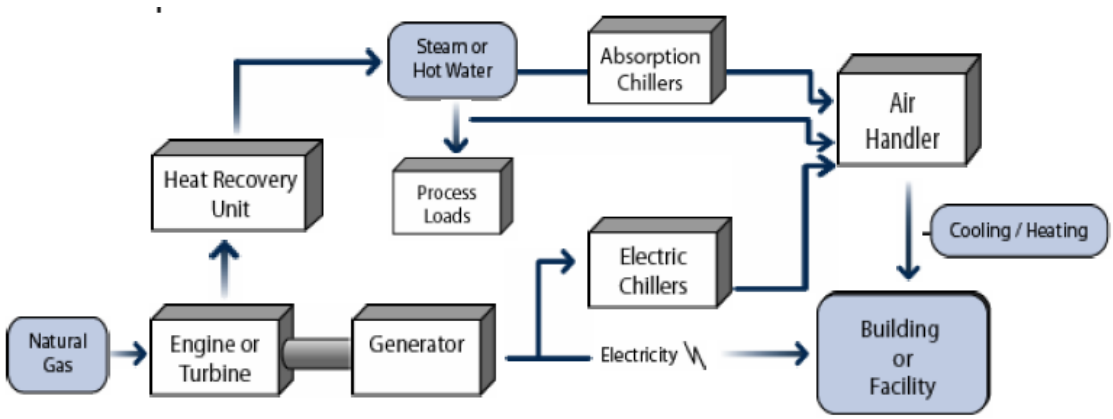

Figure 2. Conceptual schematic flow diagram of a CCHP system

Source: Gas Technology Institute

Key factors for CCHP financial attractiveness:

- Coincidence of electric loads and thermal loads – the more a facility needs electricity and at the same time it needs thermal energy (heating, cooling, or dehumidification), the greater the duty cycle of the CCHP installation and the more attractive the savings any payback associated with CCHP.
- "Spark Spread" – the higher the differential between the cost of buying electric power from the grid and the cost of natural gas, the more attractive the savings and payback associated with CCHP.
- Installed Cost Differential – the lower the differential between the installed costs of the CCHP system and that of a conventional heating/cooling system, the more attractive the savings and payback associated with CCHP.

1.1.2. Turbo-Compounding

Turbo-compounding uses gas turbine technology to convert thermal energy to mechanical power which in turn drives an electrical generator to produce electrical power. Turbo-generator technology is used to extract power from the exhaust of a reciprocating internal combustion engine. The exhaust exits the engine cylinders at high temperature and pressure and carries as much as 30-35% of the energy in the fuel out to atmosphere. The turbo-generator acts as a "bottoming cycle" for the engine in a fashion similar to that of a steam generator on a combined cycle gas turbine plant.

1. *Combined Heat and Power Resource Guide*, September 2003, USDOE

Turbo-compressors commonly used to increase specific power output of an internal combustion engine employ turbines with output matched to the compressor power required to achieve the desired increase in mass of air/fuel entering the cylinder. **Figure 3** shows an example of the power that might be generated by an optimized exhaust turbine compared with the compressor load[2]. Turbo-compounding takes advantage of this "power surplus." **Figure 4** provides a conceptual depiction of the complete electrical turbo-compounding system.

Bowman Power Group (BPG)[3] has identified three core technologies necessary to support the use of turbo-generators:

- Compact, simple, low-cost turbo machinery.
- High-speed electrical generators which are extremely efficient (98%) and small enough to couple directly to the shaft of turbo machinery.
- Software controlled power electronics to manage electrical power quality (power conditioners).

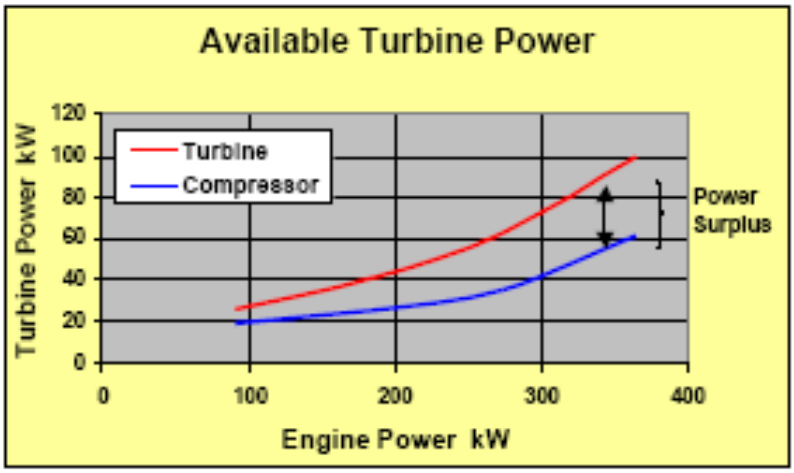

Figure 3. Potential net turbocompressor power available

Source: Caterpillar

2. "Diesel Engine Waste Heat Recovery Utilizing Electric Turbo Compound Technology," Ulrich Hopmann-Caterpillar Inc., 2002 Diesel Engine Emission Reduction Conference. August 25-29, 2002, San Diego, California.

3. http://www.bowmanpower.co.uk/Turbocompounding.html 11/21/08

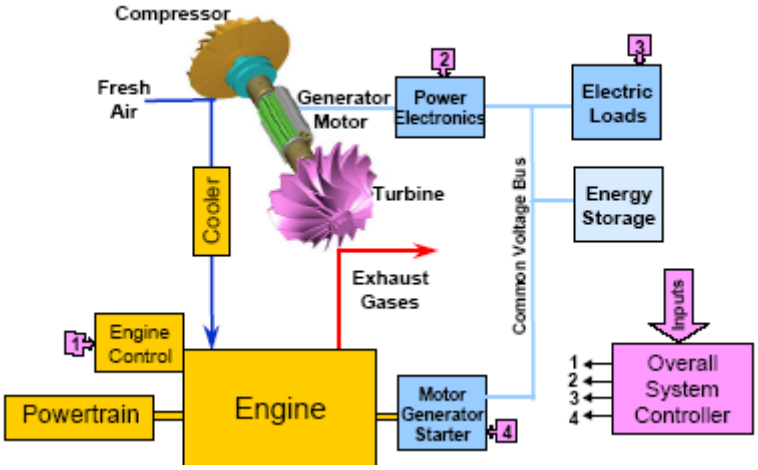

Figure 4. Typical turbo-compounding configuration (in distributed generation applications the "powertrain" is an electric generator)

Source: Caterpillar

In its implementation of these technologies, BPG claims that "power is boosted by up to 30% and fuel economy improved by 10 to 15%." The electrical power generated can be used to power electrical loads or to directly drive the engine crank shaft. BPG has developed systems to cover the range 25 kW to 165 kW, with systems up to 2,000 kWe planned for future development.

1.1.3. Rankine Bottoming Cycles

Steam Rankine Bottoming Cycles operate best at relatively high working temperatures and pressures. Exhaust gas temperatures from reciprocating engines are generally not sufficiently high for economical steam-based bottoming cycles. However, by using certain organic fluids, typically refrigerants, power can be economically generated using lower working pressures and temperatures. Bottoming systems that use these fluids are commonly referred to as Organic Rankine Cycles (ORC). Heat from the engine exhaust is used to raise the temperature of and boil the pressurized working fluid in an evaporator. The resulting vapor flows through a turbine to produce work before it is condensed at low pressure in the condenser and then repressurized and recycled.

System economics of ORCs will be influenced by the working temperatures and pressures, cost of the fluid, heat exchanger design, and requirements for integrating the system at the application. UTC Power is marketing a packaged ORC branded "PureCycle" suitable for use with reciprocating internal combustion engines[4]. The PureCycle system employs off-the-shelf refrigeration system components and uses a refrigerant as the working fluid. This bottoming cycle can increase the electrical output of a 3,000 kWe gas-fired ICE-generator by approximately 200 kW. There are several other vendors of ORC systems and further developments are underway.

4. http://www.utcfuelcells.com/fs/com/bin/fs_com_Page/0,11491,0167,00.html 9/26/08

1.1.4. Thermochemical Recuperation[5] (TCR)

TCR systems (employing engine exhaust gas recuperation) offer an innovative means for both increasing efficiency while lowering emissions of reciprocating internal combustion engines (RICE) used for power generation and pipeline transmission. TCR systems for reciprocating engines could conceivably include recovery of waste heat energy from the engine cooling, lubricating, and exhaust systems. Available waste heat is thermochemically recuperated as chemical energy in the fuel stream.

A simplified depiction of a TCR system employing steam methane reforming is provided in **Figure 5**. The major equipment items include heat exchangers, a recuperative reforming reactor, and a heat recovery steam generator. Because of the relatively low temperature of engine waste heat, a catalytic reforming reactor is used to achieve target conversions. The steam or products of combustion provide oxidant required to support the reforming reactions.

The main reaction schemes of the TCR reforming are as follows:

$$C_nH_m + H_2O \rightarrow nCO + \left(n + \frac{m}{2}\right)H_2 \quad \left(\Delta H^{\circ}_{298} > 0\right) \tag{1}$$

$$CH_4 + H_2O \leftrightarrow CO + 3H_2 \quad \left(\Delta H^{\circ}_{298} > 206.2\,\text{kJ/kmol}\right) \tag{2}$$

$$CO + H_2O \leftrightarrow CO_2 + H_2 \quad \left(\Delta H^{\circ}_{298} > -41.2\,\text{kJ/kmol}\right) \tag{3}$$

$$C_nH_m \rightarrow nC(s) + \frac{m}{2}H_2 \tag{4}$$

- Reaction (1) is a highly endothermic irreversible reaction, which increases the total fuel gas volume. All higher hydrocarbons (n>1) are converted to C1-components.
- Reaction (2) is an endothermic inverse methanation reaction, which is an equilibrium reaction that determines the final composition of the reformed fuel.
- Reaction (3) is an exothermic water gas shift (WGS) reaction, which is also an equilibrium reaction that determines the final composition of the reformed fuel.
- Reaction (4) is an irreversible reaction that occurs in the absence of sufficient steam or CO_2 to provide sufficient local oxygen to convert the carbon to CO.

5. "Thermochemical Recuperation Systems (TCRS) for Increased Efficiency and Reduced Emissions from Stationary Reciprocating IC Engines." Natural Gas Technologies III Conference Proceedings. GTI T05153. Orlando, FL. February 2005.

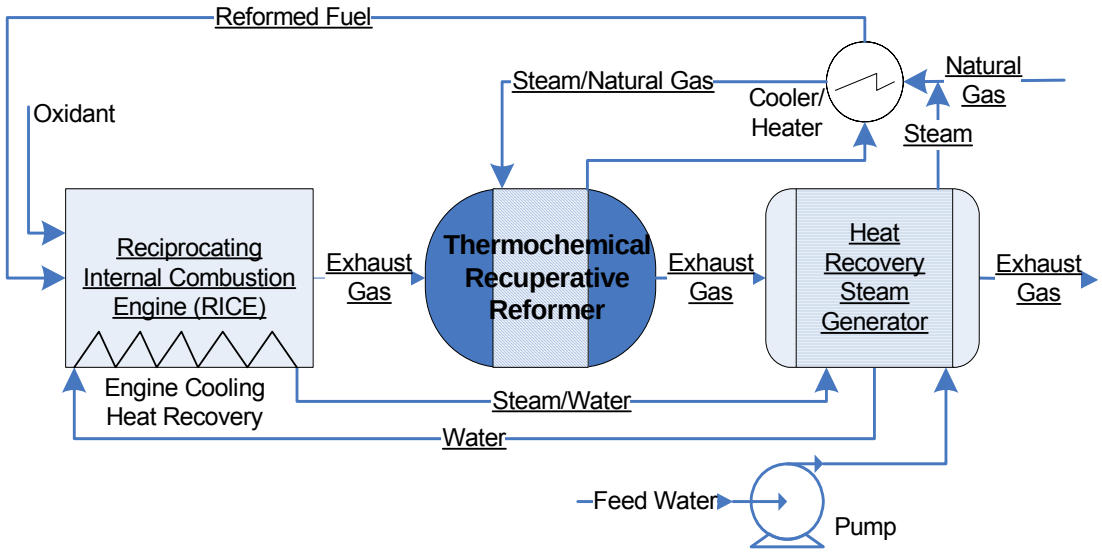

Figure 5. Thermochemical recuperation system schematic

Source: Gas Technology Institute

Overall, the reforming reactions are endothermic. In a TCR system, the heat to drive the reactions is provided by heat transfer from the hot engine exhaust. Power cycle efficiency increases by the amount of exhaust heat that can be successfully incorporated in the endothermic reactions.

The three major control parameters for the TCR reforming reactions are steam/carbon ratio (S/CR), reformer temperature, and reformer pressure. The S/CR controls H_2 yield; thus, there is a need to find an optimum S/CR for reciprocating internal combustion engine applications. The reformer temperature controls the reforming rate and final composition; thus, it also controls the H_2 yield. The reformer pressure also controls the reforming rate and composition; and the reforming rate is almost proportional to the partial pressure of CH_4 (i.e. reformer pressure). The reformer temperature and pressure are critical parameters in sizing a reformer as is the type of catalyst. In typical IC engine systems, the temperature available for the reformer is relatively low compared to industrial applications and care must be taken to maximize the use of the rejected thermal energy and to minimize the reformer size while achieving maximum attainable H_2 yield.

Research has shown that H_2-enhanced combustion can significantly reduce NOx emissions from spark ignited engines by extending the lean limit.[6] Most of the prior "art" for "in-situ" hydrogen production for reciprocating engines involves mixing some fraction of the exhaust gases with fuel to support auto-thermal reforming reactions. Excess oxygen in the exhaust gases of lean burn engines results in exothermic oxidation of fuel thus increasing fuel consumption.

6. Heywood, J.B., Ivanic, Z., et. al., "Effects of Hydrogen Enhancement on Efficiency and Emissions of Lean and EGR-diluted Mixtures in a Spark Ignited Engine" SAE Paper 2005-01-0253, April 2005.

This fuel consumption penalty affects the potential overall system efficiency and economics. TCR uses only exhaust heat recuperation to support the endothermic reforming reactions, thereby offering direct improvement in overall system efficiency plus hydrogen enriched fuel for combustion. A critical factor for commercial success is the integration of this recuperation and energy conversion process in a cost-effective and reliable package with the engine generator set.

1.2. Project Objectives

The project objectives were to:

- Develop a detailed engineering design of a recuperative reforming reactor for laboratory validation of natural gas conversion and hydrogen yields corresponding to fuel flow and exhaust conditions for a 50 kWe gas engine.
- Operate a 50 kWe laboratory-scale engine on reformed fuel produced from a thermochemical recuperation laboratory test rig to confirm satisfactory operation within generally accepted design parameters for reciprocating internal combustion engines. This testing will document fuel savings and NOx, CO, and VOC emissions and emission reduction.
- Develop the engineering design basis to scale-up TCR technology in a subsequent development and demonstration project.

1.2.1. Design and Laboratory Evaluation and Validation of 3 to 5 kWe Research Scale Recuperative Reforming Reactor

A preliminary thermochemical fuel reformer (TCFR) system analysis at a nominal 331 kWe natural gas-fueled, spark-ignited internal combustion engine was prepared. By extrapolating the results for natural gas, an analysis of the potential benefits of using TCFR for a generic biogas fuel composed of 50% methane and 50% carbon dioxide was also be completed. Using a conceptual full-scale design of a recuperative reformer for the study engine, specifications were prepared for fabricating a recuperative reforming reactor scaled and sized for gas flows equivalent to a 3 to 5 kWe engine. This is the reactor that was tested in the GTI laboratory.

A detailed engineering design of a recuperative reforming reactor corresponding to fuel flow and exhaust conditions for a 3 to 5 kWe gas engine was prepared. This reactor was used for laboratory validation of natural gas conversion and hydrogen yields. Testing was conducted to evaluate the performance of the recuperative reforming reactor as key engine and process parameters are varied. For example, it was important to measure the effect of changes in exhaust gas temperatures as a function of engine loads. The testing also included variation of process variables such as the steam to methane ratio for reforming.

1.2.2. Reformate-Fueled Internal Combustion Engine Performance

A fuel blend that simulates the composition of products from the recuperative reformer was used to fuel a 50 kWe research engine. Hydrogen was supplied from bottles and a steam generator was used to match the water content in the cooled reformed fuel from the TCFR

process. The maximum temperature of simulated reformed fuel needed to satisfy the specifications for the engine. Testing was conducted to measure the effect of the blended fuel composition on engine performance and emissions.

1.3. Technical Approach

The research in this project is building upon prior laboratory-scale R&D performed by GTI and supported by the Utilization Technology Development (UTD) and the Gas Research Institute. Results of this work are summarized in Electric Power Research Institute interim report 1012774 "Thermochemical Fuel Reformer Development Project-Higher Efficiency and Lower Emissions for Reciprocating Engines Used in Distributed Generation Applications."

Cummins and UTD provided match funding for the project reviewed in this report. Cummins was particularly interested in a system analysis of TCR for their QSK19 engine and preparation of a conceptual design of a recuperative reformer for that engine.

The sequence of activities to meet objective number one above (develop detailed engineering design of recuperative reformer), can reasonably be summarized as follows:

1. Design and fabricate laboratory-scale experimental test rig for TCR tests.
2. Develop test plan, conduct testing, and analyze data.
3. Use data obtained to develop or validate analytical tools for system analysis and design of recuperative reformers.

After assembling a working TCR test rig, the project team confirmed whether it would be possible to supply sufficient reformed fuel to the GTI single cylinder engine (configured at the time for Homogenous Charge Compression Ignition combustion) to enable comparisons between operation and performance on natural gas versus reformed fuel. There was not sufficient budget available to reconfigure the engine to operate with spark ignition.

The final task was to use results and experience obtained for system analysis of TCR and prepare a conceptual design of recuperative reformer for the QSK 19G engine.

1.4. Report Organization

Following this introduction, Section 3 summarizes previous R&D work at GTI with TCR for reciprocating internal combustion engines. Section 4 is a summary of TCFR technology development and scale-up approach. Section 5 reviews the laboratory scale setup and experiments run on the TCR test rig operated to simulate exhaust gas conditions for a reciprocating engine fueled with natural gas. Section 6 reports on the experimental set-up and results from operating a nominal 50 kWe research engine on reformed fuel produced in the TCR test rig. The last section of the report includes conclusions, recommendations and projected benefits from continued development, demonstration and commercialization of TCR for the QSK19G engine for distributed generation applications in California. Appendix A includes the conceptual design for a TCFR sized to the 1,400 kWe gen set. Appendix B includes a Bill of Materials and cost estimates for the TCFR sized to the 1,400 kWe gen set. Appendix C is the preliminary analysis of TCR for landfill gas and biogas applications. Appendix D includes photographs of the reformed fuel conditioning and delivery system for the 50 kWe engine tests.

2.0 Summary of Previous GTI Thermochemical Fuel Reforming Investigations

The current project is a continuation of previous work undertaken at GTI and reported elsewhere. The previous work consisted of thermochemical fuel reformer process design, a preliminary design of a complete system for a 1,400 kW engine-generator, preliminary performance and cost estimates for a complete system, and lab-scale investigations of catalyst performance in this application. Work by others and the previous GTI work is abstracted below.

2.1. Hydrogen-Enriched Fuel from Thermochemical Fuel Reforming

2.1.1. Hydrogen (H_2) Enriched Combustion

H_2 enriched combustion is a proven way to extend the lean limit of natural gas engines. H_2 offers many advantages as a primary fuel or in fuel gas mixture. **Table 1** lists advantages and disadvantages of using H_2 enriched natural gas. Higher peak flame temperatures can be mitigated using leaner combustion and/or exhaust gas recovery. H_2-enriched fuel can be readily used in spark ignition engines with some modifications in the systems such as fuel handling and air handling systems.

Table 1. Advantages and disadvantages of H_2-enriched natural gas combustion

Advantages	Disadvantages
Increases flame speed	Increases peak flame temperature
Improves combustion quality	Increases fuel system cost
Increases engine performance	
Reduces unburned hydrocarbon emissions	
Increases methane number (MN)	
Widens flammability limits	
Lowers minimum ignition energy	
Improves EGR tolerance	
Shortens quenching distance	

Source: Gas Technology Insitute

Tunestal[7], et al. used a single-cylinder 1.6 liter natural gas engine to extend the lean-burn limit of a natural gas engine by addition of H_2 to the primary fuel. H_2 concentrations used in the study were 0, 5, 10, and 15% by volume. They operated the engine at three operating points: idle, part load (5 bar indicated mean effective pressure), and simulated turbo charging (13 bar indicated mean effective pressure). The air fuel ratio (A/F) was varied between stoichiometric and the lean limit. The results showed that H_2 enriched combustion increased the burn rate and extended the lean limit. H_2 addition lowered HC emissions and increased NOx emissions for

7. Tunestål P., Christensen M., Einewall P., Anderson T., and Johansson B., "Hydrogen Addition for Improved Lean Burn Capability of Slow and Fast Burning Natural Gas Combustion Chambers," SAE 2002-01-2686, 2002.

constant air excess ratio (λ) and ignition timing. Increased burn rate allowed retarded ignition timing, which resulted in lower heat losses and higher efficiency. Retarded ignition timing also led to lower maximum temperature and thus lower NOx emissions. The effect of H_2 addition at wide-open throttle was most prominent close to the lean limit.

Jensen[8] et al. investigated the effect of additional producer gas on the combustion process and the engine-out emissions by fueling a naturally aspirated four-cylinder gas engine with natural gas and mixtures of natural gas and H_2 containing producer gas. The producer gas was a synthetic gas (or syngas) with the same composition as a fuel produced by thermal gasification of biomass in a two-stage gasifier. The producer gas consisted of 33.9% H_2, 19.1% CO, 1.3% CH_4, 14.9% CO_2, and 30.8% N_2 in volume. The mixtures were 75% natural gas and 25 % producer gas (by volume), and 50% natural gas and 50% producer gas (by volume), respectively. The results showed that the NOx emissions were not affected by addition of producer gas. This might be due to 45.7% by volume of inert gases in the producer gas. Unburned hydrocarbons (UHC) emissions decreased up to 50% only at excess air ratio above λ=1.4. CO emissions decreased and formaldehyde (CH_2O) emission was decreased significantly with the addition of producer gas.

Although H_2 has many advantages in internal combustion engines, the source of H_2 has to be considered. Supplying pure H_2 from process plants to engine installations has associated transportation, storage, and delivery system costs. Extended research and development has been conducted to evaluate the means for "on-board" fuel reforming systems for mobile fuel cell applications. These fuel-reforming technologies include autothermal reforming, partial oxidation reforming, steam reforming, and exhaust gas recovery reforming by partially or fully reforming a primary fuel, usually natural gas.

Andreatta and Dibble used a 1986 Pontiac four-cylinder in-line turbocharged engine. This was converted from a gasoline to a gaseous fuel engine to investigate the effect of "air-reformed" (or auto thermal reformed) fuel on spark ignition engines. They used cylinder bottle gases to formulate the composition of air-reformed fuel. The H_2 in the reformed fuel allowed the engine to run leaner as compared to natural gas, particularly at higher fractions of reformed fuel. With fully reformed fuel, the engine could run at equivalence ratio of 0.25 (λ=4). Leaner combustion reduced NOx emissions significantly. CO and HC emissions were not significantly affected by the reformed fuel over the equivalence ratios studied. However, there was an exception near the lean limit, where the presence of H_2 stabilized combustion and reduced CO and HC emissions for a given equivalence ratio. Engine peak output and thermal efficiency was dependent on equivalence ratio, not the reformed fuel concentration, except near the lean limit.

Søgaard[9] et al. used a small-scale adiabatic catalytic reactor as a steam reformer to produce reformed natural gas. In this application, the required thermal energy was provided from

---

8. Jensen T. K., Schramm J., Narusawa K., and Hori S., "Hydrocarbon Emission from Combustion of Mixtures of Natural Gas and Hydrogen Containing Producer Gas in a SI Engine", SAE 2001-01-3532, 2001.

9. Søgaard C., Schramm J., and Jensen T. K., "Reduction of UHC-emissions from Natural Gas Fired SI-engine – Production and Application of Steam Reformed Natural Gas", SAE 2000-01-2823, 2000.

external sources. Their main goal was to reduce unburned hydrocarbon emissions and increase engine efficiency using reformed natural gas in a stationary internal combustion engine. They also performed theoretical studies, which showed a potential for varying the H_2 content between 8 and 30 vol%. The studies also showed considerable increase in methane number by reforming natural gas. A higher methane number will allow the use of higher compression ratio engines, which will lead to higher engine Brake Mean Effective Pressure (BMEP) and thermal efficiency. The reformed natural gas composition was almost insensitive to the natural gas composition, i.e. the content of higher hydrocarbons. The use of reformed natural gas reduced unburned hydrocarbons and CO emissions and increased engine power and thermal efficiency. However, NO emission was increased due to improved combustion quality (thus, higher cylinder temperature). The flame development duration (start of ignition to 10% fuel burn) and rapid-burn duration (10~90% fuel burn) were significantly shortened with the use of the reformed natural gas fuel.

2.1.2. TCFR System for Supplying Hydrogen to Fuel Blend[10]

Quantitative evaluations of the potential benefits of using a TCFR system for supplying hydrogen for improving the performance and reducing the emissions of reciprocating engine applications began with a simple engine cycle analysis. The thermodynamic equilibrium analysis used the Lagrange Undetermined Multiplier Method for the simplified preliminary design shown in **Figure 6**. Preliminary results indicated that, under idealized conditions, overall efficiency (net engine minus combustion and exhaust losses) is predicted to increase by approximately 18%-19%. This is when the engine operates with the reformed fuel at the stoichiometric operating conditions for the cases considered in **Table 2**.

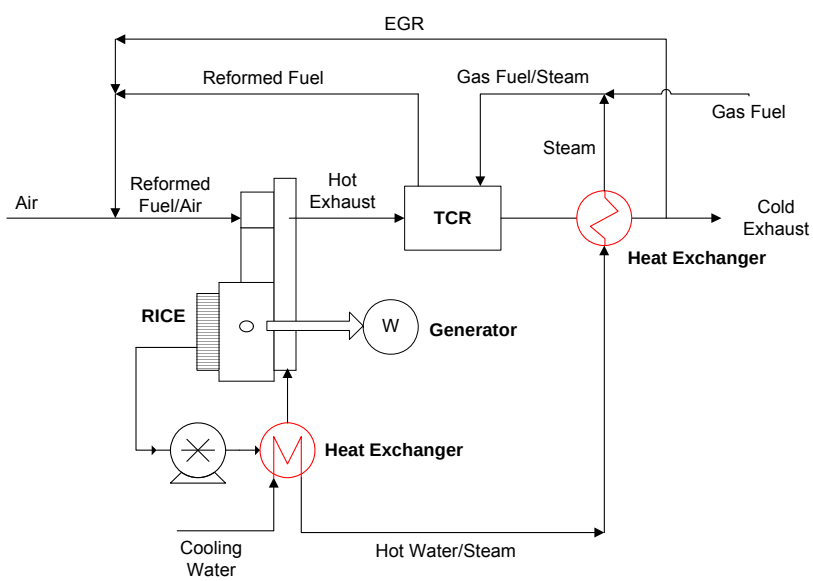

Figure 6. Schematic of a simplified TCFR system

10. *Technical and Economic Feasibility of Thermochemically Recuperated Reciprocating Internal Combustion Engine*. Final Report. GTI Project 20013. NYSERDA Report 7885. August 2006.

Source: Gas Technology Institute

This simplified, idealized model could not resolve predictions of emissions from the engine. In order to develop realistic estimates for technical and economic feasibility employing a TCFR system for efficiency gain and emissions benefits, a combination of commercial codes for engine and process modeling was employed. Ricardo's WAVE v5.2 was used to model the natural gas engine, and the Hyprotech's HYSYS® model was used for the TCR reformer and the heat recovery steam generator system. Project participant Cummins recommended its QSK60G engine for the modeling and provided the necessary information to construct a WAVE model. Cummins also provided actual test data so the model could be calibrated.

Table 2. Thermodynamic equilibrium calculation for simplified TCRF system

Steam /Carbon Ratio	Peak Cylinder Pressure [atmospheric]	Adiabatic Flame Temperature [°C]	Efficiency		
			Net Engine(%)	Loss in Combustion(%)	Loss in Exhaust(%)
0	158.5	2877.4	~ 53.15	~ 16.93	~ 29.93
1.68	116.8	2972.6	~ 62.92	~ 12.20	~ 24.88
2.0	114.5	2925.6	~ 63.21	~ 12.04	~ 24.75

Source: Gas Technology Institute

2.1.3. Engine Analysis

Key specifications of the QSK60G engine are listed in **Table 3** below. The matching generation set model 1400GQKA has an electrical rating of 1,400 kWe at 60 Hz (1800 rpm). The engine is water-cooled, turbocharged with an after cooler. The QSK60G is lean burn, designed for spark ignited natural gas combustion. The QSKG series engine is also the Cummins platform for their Advanced Reciprocating Engine System (ARES) collaboration with the U.S. Department of Energy (DOE). The ARES program goals are summarized in **Table 4**.

A schematic of the Cummins QSK60G engine equipped with the TCR reformer is shown in **Figure 7**. This engine is not a commercial version of QSK60G engines. It was built and tested by Cummins for R&D purposes.

Table 3. Specification of Cummins QSK60G lean-burn gas engine

No. of Cylinders	16
Strokes per Cycle	4
Engine Type	Spark Ignition, Lean Burn
No. of Intake Valves per Cylinder	2
No. of Exhaust Valves per Cylinder	2
Compression Ratio	11.4:1
Displacement	60 liters
Bore/Stroke	158.75 mm/190 mm
Connecting Rod Length	320.96 mm
Piston Pin Offset	None
TDC Combustion Chamber Volume	0.0003616 m3
Clearance Height	0.9 mm

Spark Timing	18~20° bTDC
Turbocharger	Holset
No. of Turbocharger	2
Waste gate	None

Source: Gas Technology Institute

Table 4. US DOE ARES goals

A Commercial Engine by 2010 with:
High Efficiency – Fuel-to-electricity conversion efficiency of at least 50%
Environmental Superiority – NOx < 0.1 g/hp-hr (natural gas)
Reduced Cost of Power – Energy costs, including O&M, at least 10% less than current state-of-the-art engines
Fuel Flexibility – Adaptable to future firing with dual fuel capabilities, include further adaptation to hydrogen
Reliability and Maintainability – Equivalent to current state-of-the-art engines

Source: U.S. Department of Energy

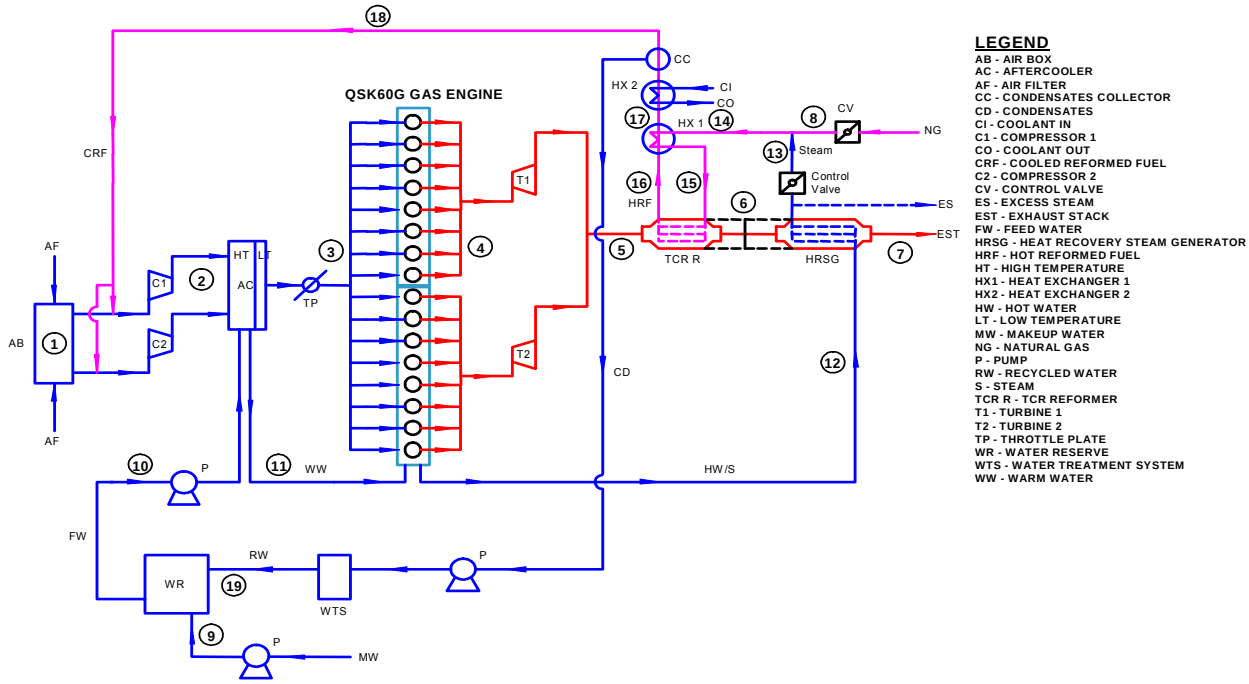

Figure 7. Schematic of the Cummins QSK60G gas engine equipped with the TCR system

Source: Gas Technology Institute

The engine system has two banks, the left bank (LB) and right bank (RB), and has a turbocharger installed in each bank. In the analyses, the TCR reformer is located just downstream of the turbochargers. These turbochargers have no waste gate. A heat recovery steam generator is located downstream of the TCR reformer. The reformed fuel is hot and has a

large quantity of water vapor. Two heat exchangers in series are used to reduce the reformed fuel temperature; water vapor is condensed as the reformed fuel is cooled. The reformed fuel temperature is controlled to maintain the maximum engine manifold temperature below 55°C. Just enough steam is generated to supply the reformer.

2.1.4. Performance Goals/Criteria for Design of TCRS

- Target heat rate reduction (from thermochemical reformer system) of >10%.
- Assume start up on 100% natural gas and transition to reformed fuel.
- Intake manifold temperature not to exceed 55ºC.
- Zero supplemental fuel consumed to support TCR reforming reactions.
- Hydrogen content of reformed natural gas mixture delivered ahead of air compressors between 20-30% by volume.
- TCR to be installed downstream of turbocharger to avoid potential need to redesign turbochargers.
- Steam to carbon ratio of Recuperative Reformer not to exceed 2 to 1.
- Exhaust gas temperature downstream of turbochargers approximately 553ºC at full load
- Design for 8000 hours per year capacity factor.
- The engine shall be capable of achieving rated power at the following conditions:
    - Ambient temperature: up to 32ºC
    - Altitude: up to 1000 meters
    - Fuel: Pipeline quality natural gas
    - Fuel minimum MN: 75
    - Inlet restriction: up to 50 mbar
    - Exhaust restriction: up to 100 mbar
    - Relative humidity: up to 100%
    - Jacket water inlet temperature: 95ºC
- Natural gas supply system pressure range between 0.25 to 3.9 bar (g).

2.1.5. Engine Simulation of TCR Reformed Fuel

A simplified process flow diagram of the TCRS analyzed with the HYSYS model is provided in **Figure 8**.

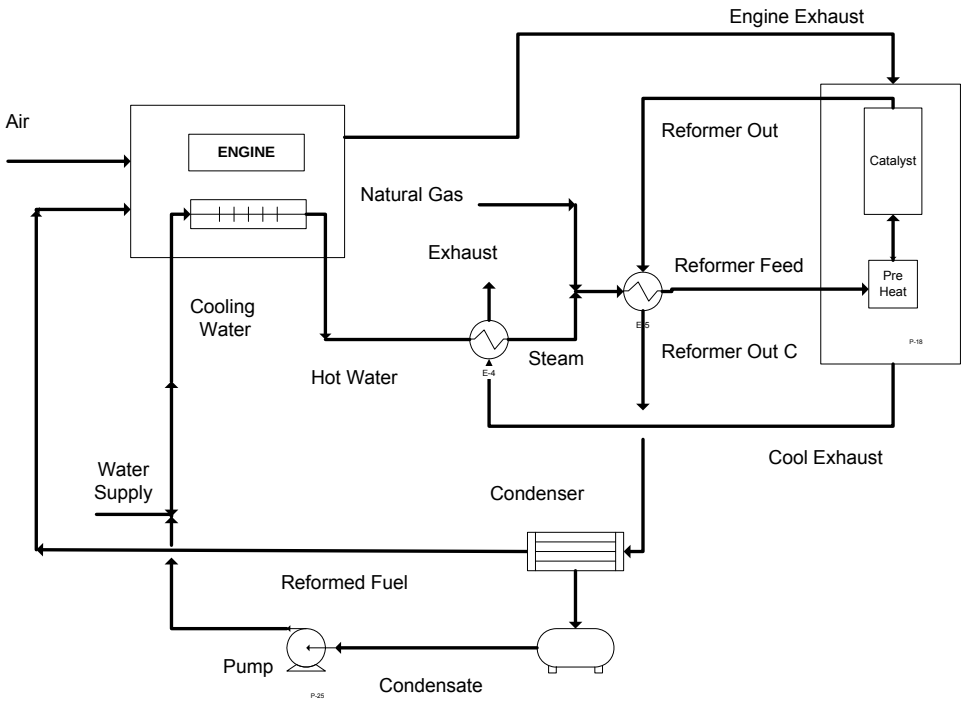

Figure 8. Process flow diagram of the Cummins QSK60G gas engine equipped with the TCR system

Source: Gas Technology Institute

For the conditions reported above, the HYSYS model predicted a reformed fuel composition from the TCFR reactor as reported in **Table 5**. This composition was used in the calibrated WAVE model to predict the Cummins QSK60G engine performance and emissions. The WAVE model was adjusted to account for the shortened combustion duration with the use of the H_2 enriched fuel.

Table 5. Compositions of natural gas and HYSYS-calculated reformed fuel (mol %)

Component	Natural Gas	Reformed Fuel
Methane	94.37	59.01
Ethane	2.82	0
Propane	0.42	0
i-Butane	0.05	0
n-Butane	0.06	0
i-Pentane	0.02	0
n-Pentane	0.02	0
n-Hexane	0.03	0
Hydrogen	0	28.11
Water Vapor	0	3.67
Carbon Monoxide	0	0.13
Carbon Dioxide	0.94	8.25
Nitrogen	1.27	0.83
Total	100	100

Source: Gas Technology Institute

A simulation was performed at 50% load in order to permit evaluation of a broad range of the excess air ratio. Operation on natural gas was compared to reformed fuel only at one operating point, i.e., an experimental point available from actual tests by Cummins on natural gas. For this simulation, the engine BMEP was maintained at 8.07 bar for both natural gas and reformed fuel, which is the same as the experimental BMEP at this load.

The volumetric calorific heating value of the TCR reformed fuel is approximately 22% less than that of the natural gas. This is, however, more than compensated for by the increased volume produced by the reforming reactions so that calorific value entering the engine per mole of natural gas consumed actually increases. Therefore, in addition to Brake Thermal Efficiency, which is the efficiency based on the fuel consumed by the engine, the concept of system thermal efficiency needs to be introduced. The system efficiency is based on the fuel fed into the engine/TCR system (i.e. natural gas).

As shown in **Figure 9**, the system efficiency of the engine/TCR system was increased by about 8.5% relative to the natural gas engine at 50% load. This efficiency increase is directly attributable to the reduction of the natural gas fuel consumption using the TCR reformer. Natural gas fuel consumption of the engine/TCR system was reduced by about 8.5% relative to the natural gas engine without the TCR system. The maximum engine efficiency was observed at excess air ratio λ=1.8. As λ was increased further, the system efficiency started to decrease.

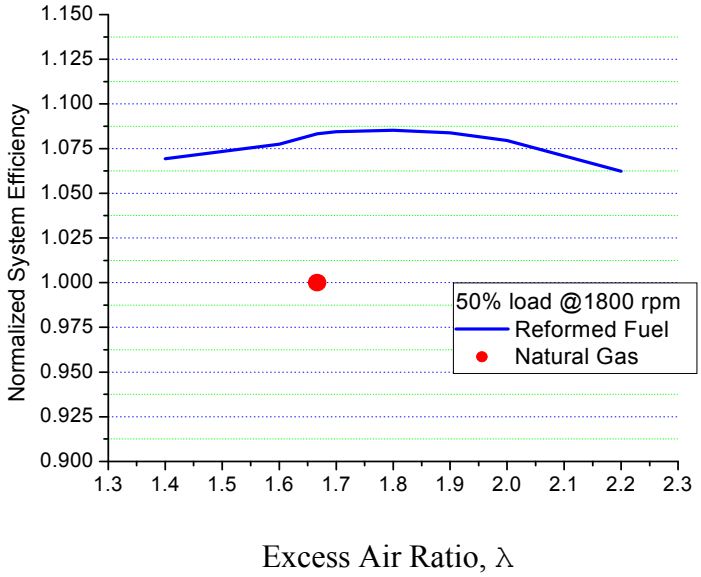

Figure 9. Normalized system efficiency versus excess air ratio (λ) for natural gas and TCR reformed fuel

Source: Gas Technology Institute

Figure 10a shows the normalized system efficiency versus the normalized NOx emissions. NOx emissions linearly decreased as the system efficiency increased up to certain λ (i.e. 1.8 in this

case). When λ was above 1.8, the system efficiency increased rapidly as the NOx emissions increased. This figure shows that the engine/TCR system can simultaneously achieve significant improvements in both efficiency and NOx emissions by operating the engine in leaner combustion.

Figure 10b shows normalized NOx emissions with respect to λ. NOx emissions exponentially decreased as λ was increased from 1.4 to 2.2. At the same λ, the reformed fuel showed higher NOx emissions than the natural gas. This is because the H_2-enriched combustion increased cylinder temperature compared to natural gas. However, the H_2 in the reformed fuel allows the extension of the lean limit to above λ=2. This results in more than 62% reduction in predicted NOx emissions. As mentioned earlier, there are other strategies to further reduce NOx emissions that have not been examined yet in this study.

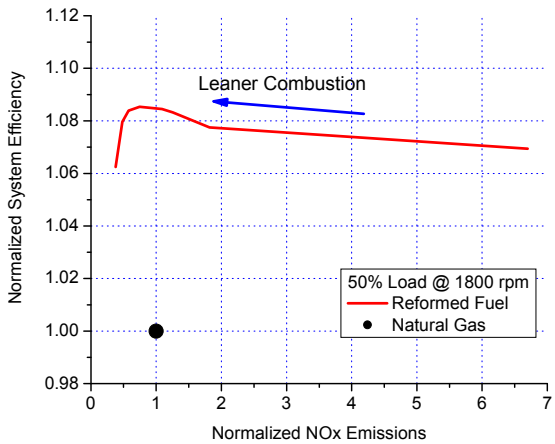

Figure 10a. Comparison of normalized system efficiency versus normalized NOx emissions for natural gas and TCR reformed fuel

Source: Gas Technology Institute

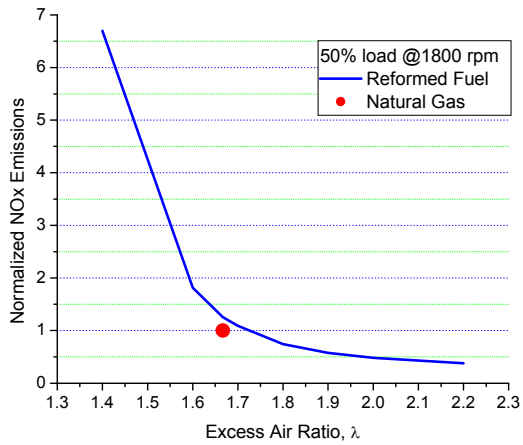

Figure 10b. Normalized NOx emissions versus excess air ratio (λ) for natural gas and TCR reformed fuel

Source: Gas Technology Institute

Figure 11 shows normalized UHC emissions for the two different fuels as a function of excess air ratio. Because the WAVE overpredicted UHC emissions at 50% load, the experiment data was also included for comparison in the figure. Predicted unburned hydrocarbon emissions increased about 41%.

Figure 11. Normalized UHC emissions versus excess air ratio

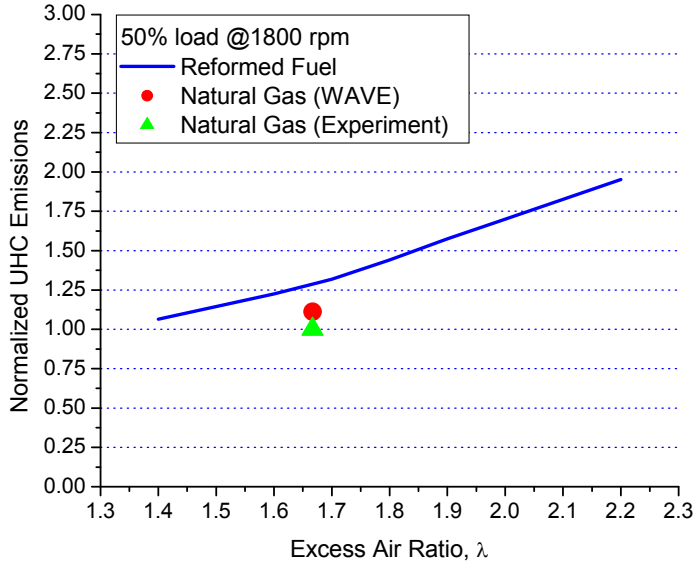

(λ) for natural gas and TCR reformed fuel

Source: Gas Technology Institute

Figure 12. Turbocharger exhaust outlet temperature as a

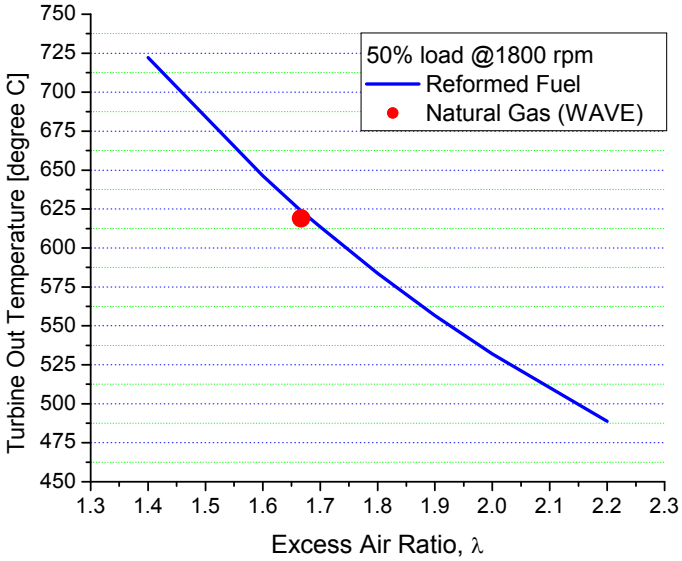

function of excess air ratio (λ)

Source: Gas Technology Institute

Turbocharger turbine-out temperature (i.e. the TCR reformer inlet temperature) is shown with respect to the excess air ratio (λ) in **Figure 12**. The predicted turbine out temperature of the natural gas was slightly lower than that of the predicted reformed fuel. The reformed fuel maintained a 489°C (912°F) turbine out temperature even at λ=2.2. This high temperature gives

positive results to the TCR reformer, whose reforming rate is almost proportional to reformer inlet temperature, at least in the temperature ranges of internal combustion engines.

2.1.6. Biogas and Landfill Gas

Since fuel reforming increases the methane number (MN) of a fuel, it is believed that the application of TCFR to engines using landfill gas or biogas could provide combustion and performance improvements. To quantify these benefits for the QSK60G engine, calibrated WAVE and HYSYS simulations were run to calculate changes in system efficiency and engine power with and without thermochemical recuperation systems.

These comparisons began by defining representative compositions and heating values for landfill gas and biogas. The WAVE model was run for the QSK60G engine (calibrated for natural gas) with each of these alternative fuels to calculate baseline estimates of engine efficiency and performance, as well as engine exhaust characteristics. The engine exhaust results were used in the HYSYS model to predict the product gases from the recuperative reformer. The WAVE model was run with the hydrogen-enriched natural gas to predict TCFR efficiency and emissions.

The reformed fuel properties for biogas and landfill gas predicted by HYSYS modeling are listed in **Tables 6 and 7**, respectively. In both cases, the reformed fuel from TCRS contained about 18% hydrogen by volume.

Some key findings from the WAVE modeling analysis for landfill gas with and without TCRS are summarized in **Table 8**. The biogas and landfill gas TCFR was modeled at 50% load while holding torque and excess air ratio constant for reformed and unreformed cases. At 50% load and constant excess air ratio of 1.59, about a 0.77% decrease in system heat rate was predicted. Under similar conditions a decrease in system heat rate of about 8.5% was calculated for natural gas fueling. However, the WAVE modeling predicted that the NOx emissions fueling with reformed landfill gas would be about 40% lower than fueling with raw landfill gas.

Table 6. Reformed biogas fuel properties

Mole Fraction Type	Value
Mole Fraction (CO)	0.0026
Mole Fraction (CO_2)	0.3000
Mole Fraction (H_2O)	0.0416
Mole Fraction (Hydrogen)	0.1865
Mole Fraction (Methane)	0.4632
Mole Fraction (Nitrogen)	0.0046
Mole Fraction (Oxygen)	0.0015
Lower Calorific Value (kcal/kgmole)	99,800

Source: Gas Technology Institute

Table 7. Reformed landfill gas properties

Mole Fraction Type	Value
Mole Fraction (CO)	0.0011
Mole Fraction (CO_2)	0.0818
Mole Fraction (H_2O)	0.0416
Mole Fraction (Hydrogen)	0.1786
Mole Fraction (Methane)	0.4326
Mole Fraction (Nitrogen)	0.2402
Mole Fraction (Oxygen)	0.0241
Lower Calorific Value (kcal/kgmole)	93,400

Source: Gas Technology Institute

Comparable WAVE modeling results for reformed biogas are summarized in **Table 9**. In this case, use of TCFR results in about a 1.33% reduction in heat rate at 50% load and constant excess air ratio (λ). The model does not predict much change in the NOx emissions at constant excess air ratio (λ).

Table 8. Engine performance and emissions comparison-landfill gas

Parameter	Units	Landfill Gas	Reformed landfill Gas	Remark
λ		1.59	1.59	Constant
Brake Thermal Efficiency	%	32.9	32.8	
System Thermal Efficiency	%	32.9	33.2	0.77%
Brake Torque	N-m	3862	3862	Constant
Brake Power	kW	728	728	
Brake Specific Fuel Consumption	kg/kWh	0.4618	0.5318	
System Specific Fuel Consumption	kg/kWh	0.4618	0.4582	
Brake NOx	g/kWh	3.077	1.944	
Exhaust NOx	ppmv	311	189	
Exhaust CO	ppmv	233	152	
Brake Specific UHC	g/kWh	9.0	11.9	
Exhaust UHC	ppmv	1290	1429	

Source: Gas Technology Institute

Table 9. Engine performance and emissions comparison-biogas

Parameter	Units	Biogas	Reformed Biogas	Remark
λ		1.59	1.59	Constant
Brake Thermal Efficiency	%	32.7	32.5	
System Thermal Efficiency	%	32.7	33.2	0.77%
Brake Torque	N-m	3865	3862	Constant
Brake Power	kW	729	728	
Brake Specific Fuel Consumption	kg/kWh	0.4618	0.5830	
System Specific Fuel Consumption	kg/kWh	0.5223	0.5142	
Brake NOx	g/kWh	1.370	1.357	
Exhaust NOx	ppmv	131	129	
Exhaust CO	ppmv	144	142	
Brake Specific UHC	g/kWh	9.7	11.8	
Exhaust UHC	ppmv	1672	1792	

Source: Gas Technology Institute

Laboratory Studies of Recuperative Reforming Reactors[11]

11. *Recuperative Reformer for High Efficiency and Ultra-Low Emissions DG with Reciprocating Engines, Final Report: August 2004 – March 2006*. April 2006. GTI Project 20094

2.1.7. Summary of 1kWe Laboratory-Scale TCFR Tests

Concurrent with the performance modeling described above, laboratory investigations were begun to support the design of the recuperative reforming reactor. The objective was to design, build, and test a lab-scale thermochemical recuperative reformer (RR) for reciprocating gas engines. The recuperative reformer was tested on a bench under simulated gas engine operating conditions to measure and compare heat transfer and reforming efficiencies relative to predicted values. Targets were derived from results of the technical and economic feasibility study of TCR for the 1,400 kWe reciprocating engine.

The preliminary conceptual RR design was based on a tube-and-shell geometry rather than plate and frame. Two conceptual designs for recuperative reformers for reciprocating engines in the 1,000 kWe to 1,500 kWe size range were prepared.

A bench-scale recuperative reforming reactor, scaled to equivalent gas flows from a 1 kWe engine, was designed, fabricated, and tested. Using simulated engine exhaust conditions that were scaled from the full-scale modeling studies for the Cummins QSK60G engine, the preliminary tests confirmed the technical viability of the RR concept. Specifically, the testing confirms the potential to achieve a target hydrogen yield of about 25% by volume from a recuperative reformer recovering waste heat from engine exhaust and using steam methane reforming at a steam to carbon ratio of 2:1.

Laboratory test results were then used to validate an engineering design tool for future scale-up and laboratory testing of an improved RR for a natural gas engines. The improvements will largely be directed toward reducing losses and improving heat recovery. This is to lead to more efficient and cost-effective design of the recuperative reformer.

The experimental design depicted in **Figure 13** was used to confirm the fundamental feasibility of the recuperative reformer subsystem. The previous HYSYS process simulations of TCR applied to the Cummins QSK60G engine were based on the waste heat from an engine exhaust, downstream of the turbo-charger. This results in a low temperature waste stream, around 550ºC.

Proof-of-reforming tests were completed utilizing a commercial pre-reforming catalyst. As shown in **Figure 14**, the off-the-shelf pre-reforming catalyst data verifies that conversions consistent with the process simulations were obtainable across a wide range of space velocities. Test results confirm that exhaust gas heat can be used from an engine, downstream of a turbocharger, at about 520ºC. The waste heat can be used to pre-reform natural gas and produce a raw reformate with 10 to 15% H_2. When the water is condensed out at 30ºC, a fuel input to the internal combustion engine of about 25% H_2 results.

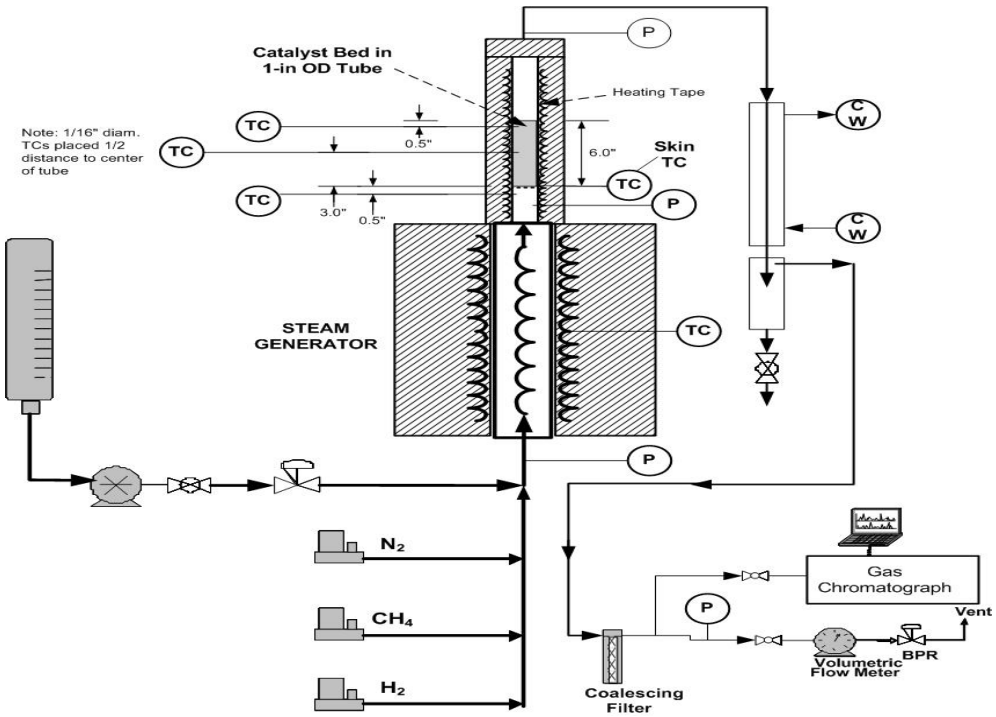

Figure 13. Laboratory set-up – low temperature methane reforming (recuperative reforming for reciprocating engine)

Source: Gas Technology Institute

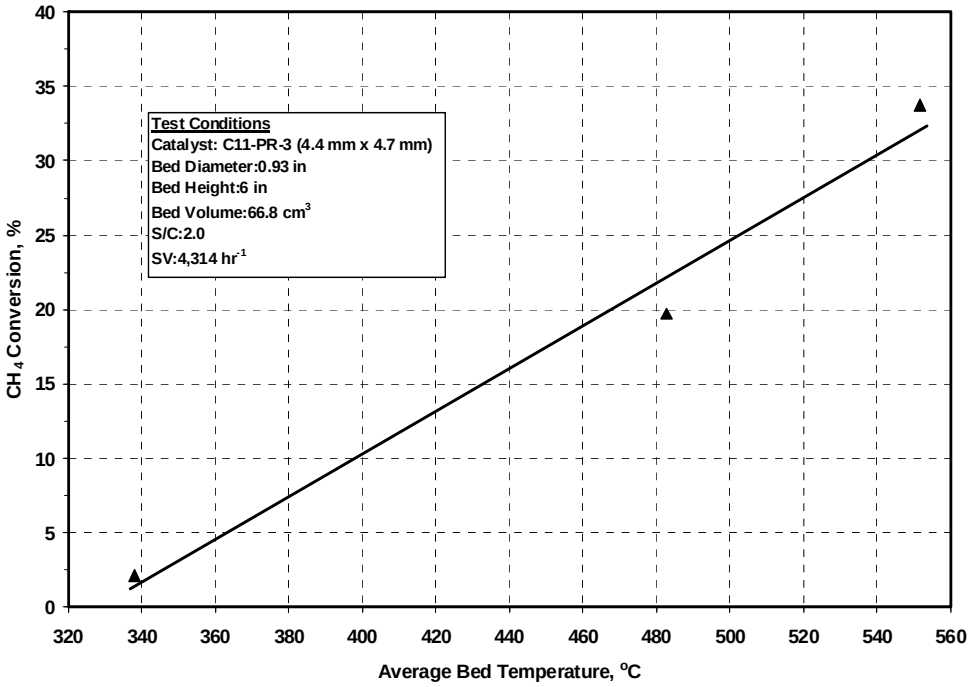

Figure 14. CH_4 conversions versus temperature for pre-reforming catalyst

Source: Gas Technology Institute

Further testing was conducted using the laboratory scale unit shown by schematic and photograph in **Figures 15 and 16**, respectively.

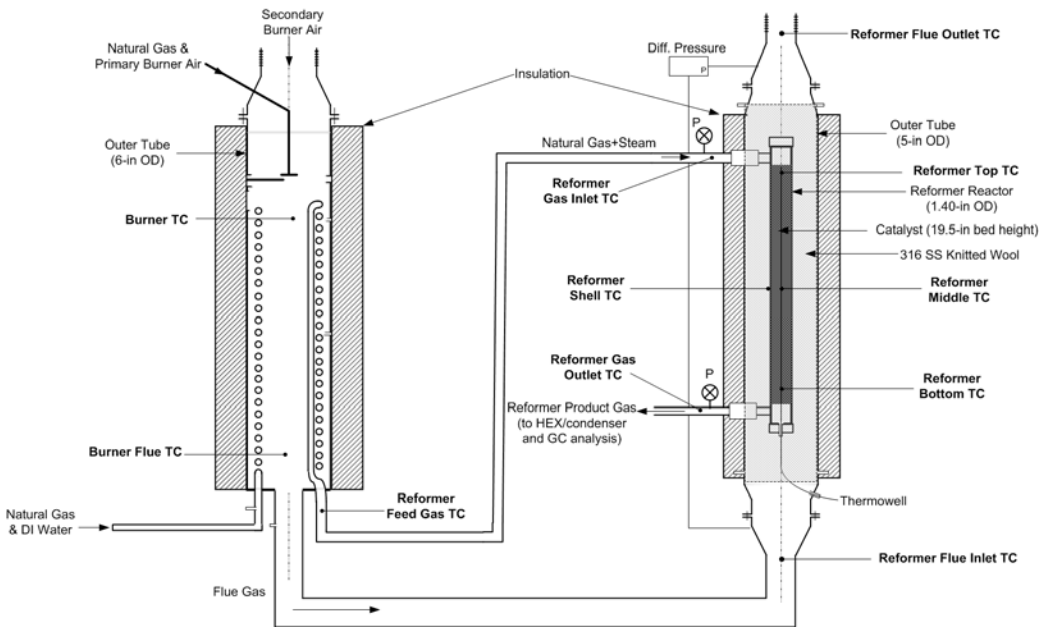

Figure 15. Schematic of the GTI RR experimental test unit

Source: Gas Technology Institute

Figure 16. GTI laboratory-scale recuperative reformer test cell
Source: Gas Technology Institute

The test unit represents the recuperative reformer in a TCR System. The test unit shown in **Figure 15** schematic contains two sections – a combustion chamber and a reforming reactor. The combustion chamber consists of an insulated 6-inch 316 SS tube with inlet connections for natural gas, deionized water, primary air, and secondary air. A natural gas burner fires down into a ½-inch diameter 316 SS coiled tube heat exchanger where natural gas and water are heated to supply the reformer feed. The reformer feed is a mixture of natural gas and steam corresponding to a steam-to-carbon (S/C) ratio of 2. The feed is preheated to 245˚C before its partial conversion to hydrogen, carbon monoxide, carbon dioxide, and water vapor in the catalyst bed. The hot engine exhaust at 550˚C raises the reformer catalyst bed temperature to about 380˚C by heat transfer.

The test unit was sized to simulate the equivalent flow of a 1-kWe engine. The process conditions are shown in **Table 10**. Test conditions are comparable to those set in the HYSYS process modeling simulation of the RR for a Cummins QSK60G engine system. The top and bottom of the reforming reactor was filled with knitted 316 SS wire mesh to enhance the heat up of the catalyst bed by the hot simulated engine exhaust gases via heat transfer. The reforming reactor is packed with 18-inch of C11-PR pre-reforming catalyst supplied by Sűd Chemie, Inc. The effectiveness of this pre-reforming catalyst was demonstrated previously in lab-scale reforming experiments. A thermo-well with three thermocouples was installed into the reforming reactor to measure the gas temperatures just above the inlet, middle, and exit of the catalyst bed. In addition, thermocouples were also inserted to measure the inlet and outlet

temperatures of the reformer flue and reformer gas. Pressure differences and pressures were also measured by pressure gauges.

The test results, including temperatures and pressures at various locations in the unit during the test, are shown in **Table 11**. A product gas analysis was carried out using a gas chromatograph to determine natural gas conversion in the recuperative reformer. The results in **Table 11** indicate that the natural gas conversion level of 7% in the reformer is comparable to the level predicted by HYSYS model simulation. However, the dry percentage of hydrogen in the products of reforming was only 69% of what was expected from the HYSYS simulation (18 versus 26%). This was due to a lower reformer bed temperature of 324ºC (average of the three thermocouple readings in the catalyst bed) compared to 382ºC employed for the simulation study. This suggested that future RR design configurations need to address the optimization of heat transfer in the RR system to attain a higher and uniform temperature distribution in the reformer catalyst bed for higher natural gas-to-hydrogen conversion levels. Overall, the test successfully demonstrated the viability of the RR concept.

Table 10. Experimental test conditions

Reformer Reactor		
Length	49.53	cm
Diameter	3.048	cm
Volume	361	cm3
Catalyst:		
Type	C11-PR	
Size	4.7x4.7	mm
Weight	287.4	g

Experimental Reformer Gas Flows		
Natural Gas to Reformer	6.0	SLPM
Water to Reformer	9.15	g/m

Experimental Flue Gas Flows		
Natural Gas to Burner	6.0	SLPM
Primary Air to Burner	16.9	SLPM
Secondary Air	137.4	SLPM
Total	160.3	SLPM

Feed Natural Gas Composition	
Component	mol%
Methane	90.7
N2	4.65
Ethane	3.35
CO2	0.92
Propane	0.28
n-Butane	0.05
i-Butane	0.03
n-Pentane	0.02
Total	100.00

Source: Gas Technology Institute

Table 11. Experimental reformate flow (test conditions in Table 10)

Experimental Reformate Flow										SLPM flow @ 60 F
Sample	Volume			Time		Pressure		Rate		
#1	5.0	liters		39.9	sec	<1 "WC		7.31	slpm	
#2	5.0	liters		39.7	sec	<1 "WC		7.34	slpm	
							Average Flow	7.33	slpm	
							Average Flow Dry	7.105	slpm	

Experimental Water KOP Data						
			Time		Rate	
Sample	Weight Collected		min	sec		
#1	186.6	g	21	15.4	8.8	g/min
#2	121.8	g	14	55	8.2	g/min
#3	125.3	g	14	32.7	8.6	g/min
				Average Flow	8.5	g/min

Reformer Section Pressures		
Reformer Inlet-Outlet	8	" WC
Flue Gas Inlet-Outlet	< 0.2	" WC
Reformer Inlet	1.2	psig
Reformer Outlet	25	" WC

Reformate Gas Composition , mol%											
GC Run #	CO2	N2	O2	CH4	H2	C2H6	CO	C3	C4	C5	Total
B4 Chf15	5.00	3.25	0.03	74.7	18.4	1.68	0.025	0.130	0.027	0.003	103.3
B4 Chf16	5.04	3.27	0.06	77.2	18.6	1.72	0.028	0.133	0.028	0.003	106.0
B4 Chf17	5.05	3.25	0.05	75.2	18.6	1.65	0.025	0.128	0.026	0.004	104.1
B4 Chf18	5.10	3.20	0.06	74.7	18.7	1.65	0.026	0.127	0.027	0.003	103.6
Average	5.05	3.24	0.05	75.5	18.6	1.68	0.026	0.129	0.027	0.003	104.2
Norm.	4.84	3.11	0.05	72.4	17.8	1.61	0.025	0.124	0.026	0.003	100.00

	CH4	NG*	
Product Gas	5.14	5.27	slpm
Feed Gas	5.46	5.69	slpm
Feed-Product	0.32	0.42	slpm
Conversion	5.9	7.4	%

*NG=Natural gas

Experimental Material Balance			
	C, mol	O, mol	H, mol
Feed	0.253	0.513	1.998
Product	0.243	0.502	1.954
P/F	95.9%	98.0%	97.8%

Source: Gas Technology Institute

2.2. TCFR RICE Cost Estimation

2.2.1. Approach

The simulation and modeling results reviewed above were used to refine the TCFR conceptual design and to provide guidance for a preliminary engineering design of a TCR RICE system. The preliminary design was based upon the use of a Cummins QSK60G gas engine generator set producing 1,400 kW electrical output. A bill of materials was generated. The simulation models were used to define the key performance and sizing parameters for new components of the TCFR system. These performance specifications were used to generate quotations and engineering estimates for the key components. The cost of other components and materials in the bill of materials were estimated based upon catalog prices and engineering estimates. An economic cost model was developed using an Excel spreadsheet. The economic model considered fuel consumption savings, TCR operation and maintenance costs, TCR manufacturing costs, and installation costs. The model calculated a payback period. The economic model was set up to allow easy changes of the input assumptions so that sensitivity analyses could be conducted.

2.2.2. Key Assumptions

The TCFR RICE system equipment layout that served as the basis for the cost analysis is shown in Figure 17. It was assumed that the TCFR system would be packaged on a separate mounting platform to allow easy installation (onsite) next to the engine and generator set. The items within the dashed line box of the schematic are those components that make up the TCFR system. The design of the recuperative reforming reactor is given in Appendix A.

Other key assumptions are listed below:

- Engine brake and electrical output (i.e. generator efficiency) from Cummins brochure 10/02 CPG QSK60G/C.
- Natural gas lower heating value (LHV) of 33.44 MJ/Nm^3.
- QSK60G brake thermal efficiency as reported by Axel zur Loye in presentation report titled "ARES Technology Development for QSK60 Natural Gas Engine dated March 15, 2005."
- Fuel cost is spot price at the Henry Hub taken from Natural Gas Weekly Update for 24 March 2005 – www.eia.doe.gov.
- Brake thermal efficiency = actual fuel consumption (Btu/kW-hr) divided by 3412 (Btu/kW-hr).
- Electricity cost from New York State Energy Research and Development Authority 2004.
- Operation and maintenance cost includes maintenance reserve for overhaul.
- Facilities capital cost of money calculation assumes total gen set purchase price with TCR is $600,000 (approx. $428/kW installed price).
- 30ºC maximum reformate gas temperature – higher allowable reformate gas temperature will lower cost of certain TCR components.
- 91% availability.

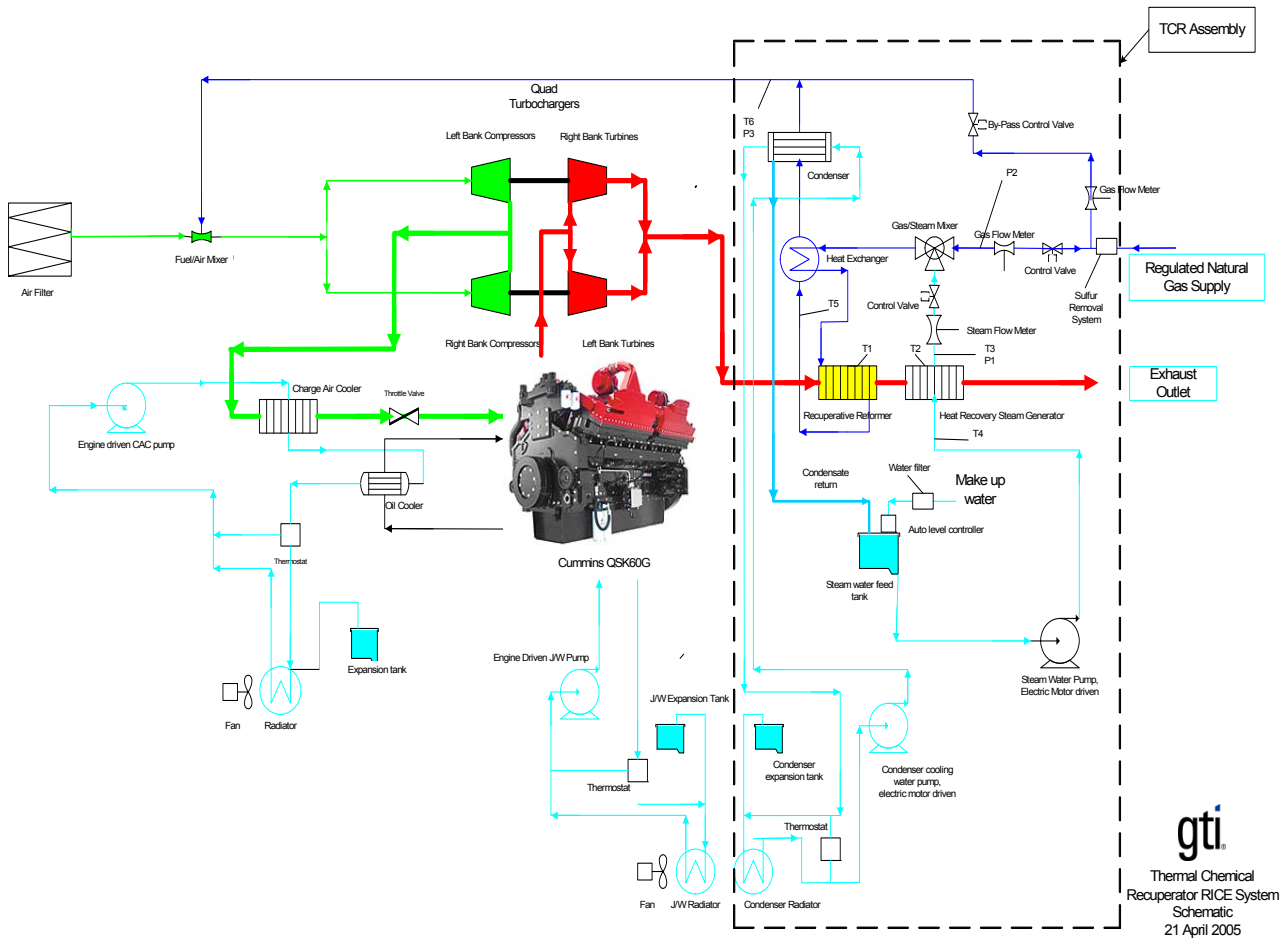

Figure 17. TCRS system assembly and components for cost estimation

Source: Gas Technology Institute

2.2.3. TCR System Cost

It was assumed that the TCR system would be pre-assembled at a manufacturing facility and pre-tested with a hot-gas test rig. Site installation and engine hook-up costs were estimated. It was assumed that the engine electronic controller would have the capability to perform the additional control functions required of the TCR. An incremental additional cost for the engine controller was included.

The incremental installed cost of $100,883 for the TCR system includes all items listed in the Bill of Materials provided in Appendix B. The recuperative reformer accounts for more than 40% of the estimate for the total installed cost of a TCRS for the Cummins QSK60G engine. This is important to highlight because this is only a budgetary estimate (generally assumed to be accurate within 25%). Suppliers indicated that they believed the recuperative reformer cost estimate was conservatively high for a "one-of-a-kind" hardware item.

Based upon findings reported earlier, the primary operating benefit is an 8.5 % system efficiency increase from the TCRS. This efficiency gain was used to estimate annual fuel cost

savings to calculate a payback period for the incremental capital investment for TCRS. **Table 12** summarizes the results. The assumptions reported result in a simple payback of about 1.9 years.

Annual maintenance costs increase for the TCFR case. The primary driver is the recuperative reformer. It was been assumed that the recuperative reformer will need to be inspected, cleaned and refurbished every 16,000 hours. The cost of this action is annualized for the payback calculation. It is expected that as the recuperative reformer technology matures and more experience is obtained, the frequency of this maintenance action may be extended.

Table 12. TCRS cost estimates for Cummins QSK60G generator set

Element	Value
Electrical rating (kW)	1,400
Operating hours/year	8,000
Annual fuel cost without TCR	$734,336
Annual fuel cost with TCR	$671,917
Incremental O&M costs with TCR	$9,093
Net annual savings	$53,325
TCR cost	$100,883
TCR payback period (years)	1.9
TCR installed cost ($/kW)	$72

Source: Gas Technology Institute

3.0 Summary of Thermochemical Fuel Reforming Technology and Scale-Up Approach

3.1. Thermochemical Fuel Reforming Technology Status Summary

The Cummins QSK19G engine served as the basis for the system analysis and conceptual design of a recuperative reformer because Cummins expects to use it for future high efficiency, low emissions development work. A simplified engine performance model was developed in HYSYS and used to estimate potential improvements in engine efficiency by applying a TCR system. The model allowed prediction of engine power output, heat losses in cylinders, and heat losses with exhaust gas for various intake mass flow rates and chemical compositions. The model was verified based on baseline data provided by Cummins. The chemical composition for natural gas used in the analyses is shown in **Table 13**. The baseline characteristics of QSK19G engine at 100% load are listed in **Table 14** along with HYSYS calculation results.

Table 13. Reference natural gas composition for engine/reformer modeling

Natural Gas Composition (Mole Fractions):	
CH_4	0.888
CO_2	0.0218
H_2O	0
CO	0
O_2	0
N_2	0.0283
H_2	0
C_2H_6	0.048
C_3H_8	0.011
C_4H_{10}	0.0029

Source: Gas Technology Institute

Table 14. QSK19 lean burn engine characteristics without TCR (rated speed 1800 rpm)

	Cummins Technical Data	HYSYS Simulation Results	
Power Output, kW:	351	351	
Heat Input, kW:	1,023	1,019	
Mechanical efficiency, %:	34.4	34.4	
Intake Air Flow, kg/s:	0.547	0.548	
Exhaust Gas Flow, kg/s:	0.569	0.569	
Fuel Consumption, kg/s:	0.0215	0.0215	
Excess air, %:	57.5	57.5	
Peak Temperature, ^{0}C		1,864	
Peak Pressure, kPa		12,430	
Chemical composition (Mole Fractions):		Air/Fuel mixture	Exhaust
CH_4		0.059	0
CO_2		0.0005	0.063
H_2O		0	0.124
CO		0	0.00018
O_2		0.197	0.072
N_2		0.742	0.741
H_2		0	0
C_2H_6		0.0017	0
C_3H_8		0.00027	0
Gas Temperature, ^{0}C:			
After Compressor		101	
After engine		700	
After turbine	536	534	

Source: Gas Technology Institute

Figure 18 is a simplified flow diagram for the Cummins QSK19G engine without TCR system (baseline conditions). **Figure 19** is a Sankey diagram that provides a visual energy balance for the baseline engine system.

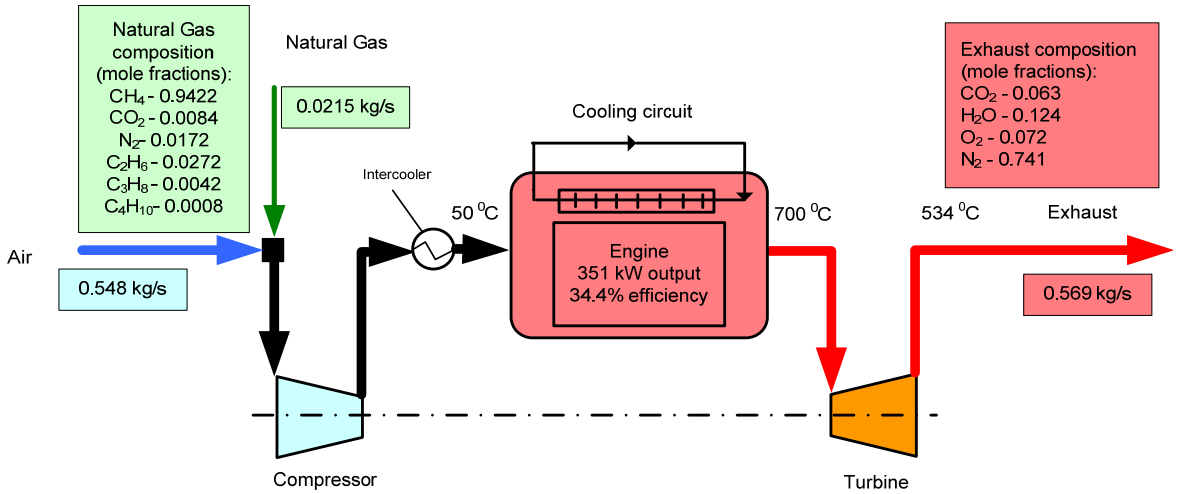

Figure 18. Simplified flow diagram for Cummins QSK19G lean burn engine without TCR

Source: Gas Technology Institute

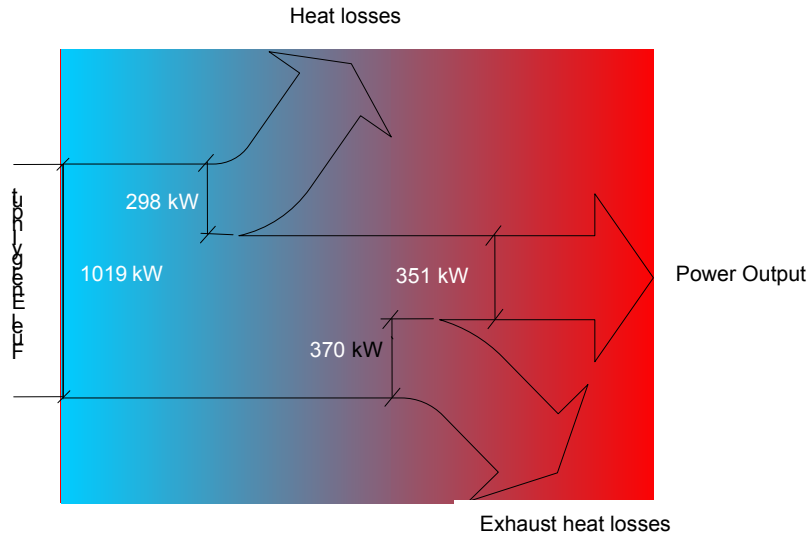

Figure 19. Sankey diagram of QSK19G lean burn engine without TCR

Source: Gas Technology Institute

A simplified engine performance model integrated with the HYSYS process model was used to predict the efficiency improvement for TCR on the QSK19G engine. Using engine performance and operating information provided by Cummins, preliminary estimates of potential gains in system efficiency were calculated. These results were used to help guide the test plan for

subsequent experimental work on the TCR test rig described later in Section 5. The experimental results were used to calibrate the analytical tools.

Prior research by the project team on TCR RICE had suggested that the engine exhaust gas temperature could significantly affect the percent completeness of the endothermic (reforming) reactions. Accordingly, the preferred location of the recuperative reformer is as close to the engine exhaust manifold as possible. Like many of today's stationary gas engines, the QSK19G is turbocharged. The TCR analysis was run under two cases: 1) the RR is located on the high pressure side of the gas turbine and 2) the RR is located after the gas turbine. Because it was outside the scope of this project to determine whether Case 1 was practical from the standpoint of matching engine and turbo-charging requirements without additional turbocharger development, Case 2 results were used for developing a conceptual design of the recuperative reformer.

Figures 20 and **21** show simplified process flow and Sankey diagrams for Cummins QSK19G engine when the TCR system locates the recuperative reformer after the turbocharger. Comparing efficiencies in **Figures 18** and **20**, the system thermal efficiency is increased from 34.4% to 36.2% because of TCR. The reformed fuel contains 55.4% hydrogen. The Sankey diagrams give a visual representation of energy transfer in the engine.

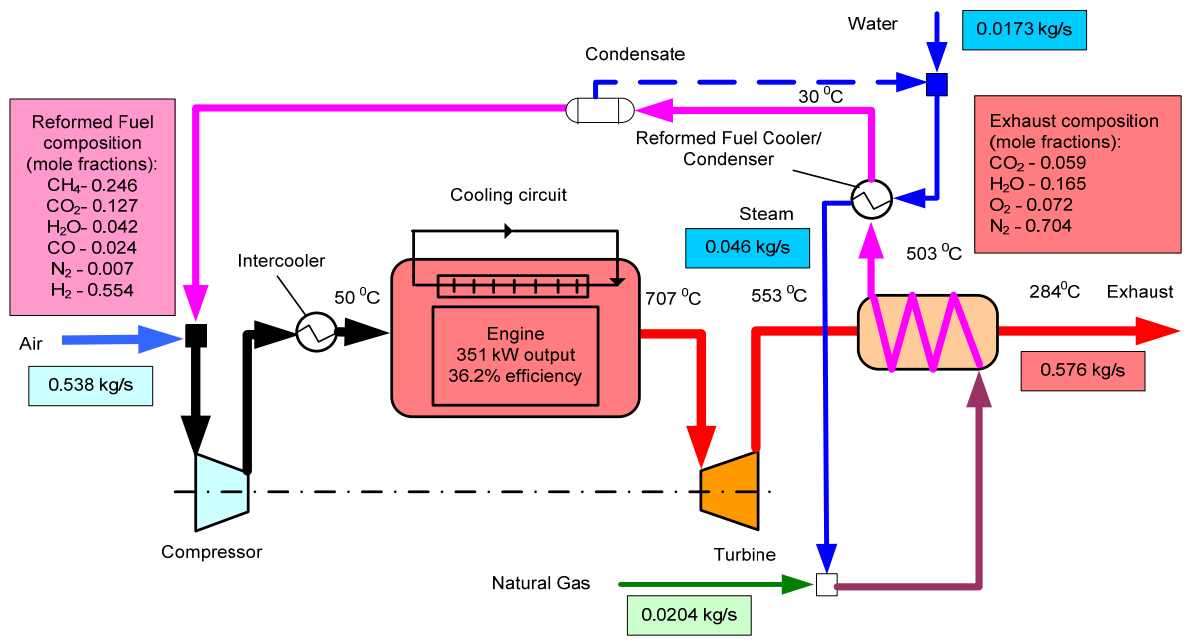

Figure 20. Simplified flow diagram of Cummins QSK19G lean burn engine with recuperative reformer after turbocharger

Source: Gas Technology Institute

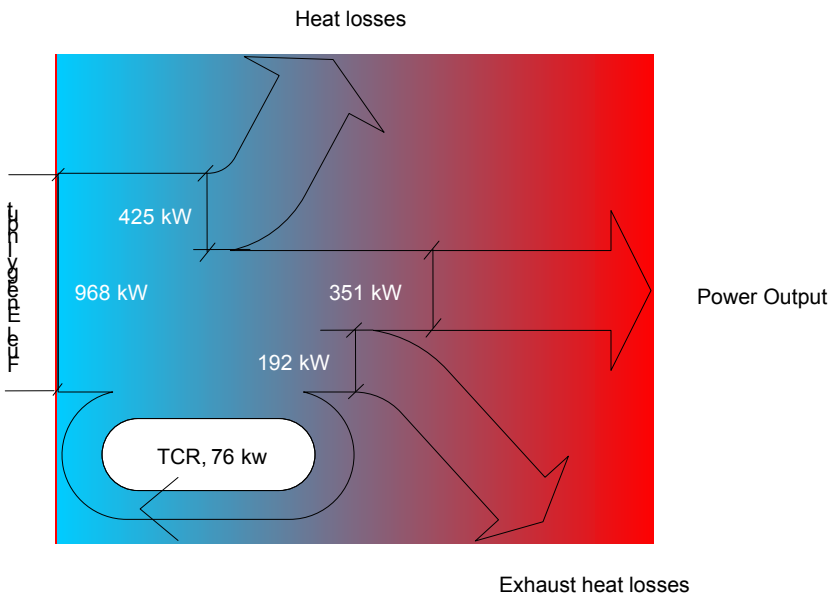

Figure 21. Sankey diagram for QSK19 lean burn engine with steam/natural gas reforming (reformer after turbocharger)

Source: Gas Technology Institute

3.2. Performance Goals/Criteria for Design of TCR System

- Target energy gain (from thermochemical reformer system) of >5%.
- Assume engine start up on 100 % natural gas and transition to reformed fuel.
- Intake manifold temperature not to exceed 55ºC.
- Zero supplemental fuel consumed to support TCR reforming reactions.
- 20-30% by volume hydrogen content for reformed natural gas mixture delivered ahead of air compressor.
- TCR preferred location is downstream of turbocharger to avoid potential need to redesign turbochargers.
- Steam to carbon ratio of recuperative reformer not to exceed 2.
- Exhaust gas temperature downstream of turbochargers approximately 553ºC at full load.
- Design for 8000 hours per year capacity factor.
- The engine should be capable of achieving rated power at the following conditions:
    - Ambient temperature: up to 32ºC
    - Altitude: up to 1000 meters
    - Fuel: pipeline quality natural gas
    - Fuel minimum MN: 75
    - Inlet restriction: up to 50 mbar
    - Exhaust restriction: up to 100 mbar

    - Relative humidity: up to 100%
    - Jacket water inlet temperature: 95ºC
- Natural gas supply system pressure range between 0.25 to 3.9 bar (g).

3.3. Conceptual Design of Recuperative Reformer

A preliminary conceptual design of the recuperative reformer for the engine application being evaluated in this project was prepared to provide some perspective on its potential size. The following points are significant:

The recuperative reformer dimensions in this conceptual design were estimated based on shell-and-tube type heat exchanger. Another design such as plate and frame should also be considered.

Heat losses, both at the reformer and along piping, have been included in the modeling and design calculations. They were assumed to equal ~20%.

Conservative assumptions for the reforming temperature were used in the modeling calculations. There appears to be sufficient heat available in the exhaust gas to design for a 50C-100C higher reforming temperature. A higher reforming temperature would affect the results positively.

Additional analysis key parameters would be required (steam/natural gas ratio, reforming temperature, air/fuel ratio) to optimize the TCR system and achieve the highest increase in engine efficiency.

Figures 22 and **23** represent conceptual designs of the TCR system and recuperative reformer for QSK19G engine. Preheating zone in the reformer (Figure 23) consists of finned tubes without catalyst and is required to raise natural gas/steam mixture temperature to the level where reforming reactions have high rates. The reformer size can be reduced if a plate type design is considered.

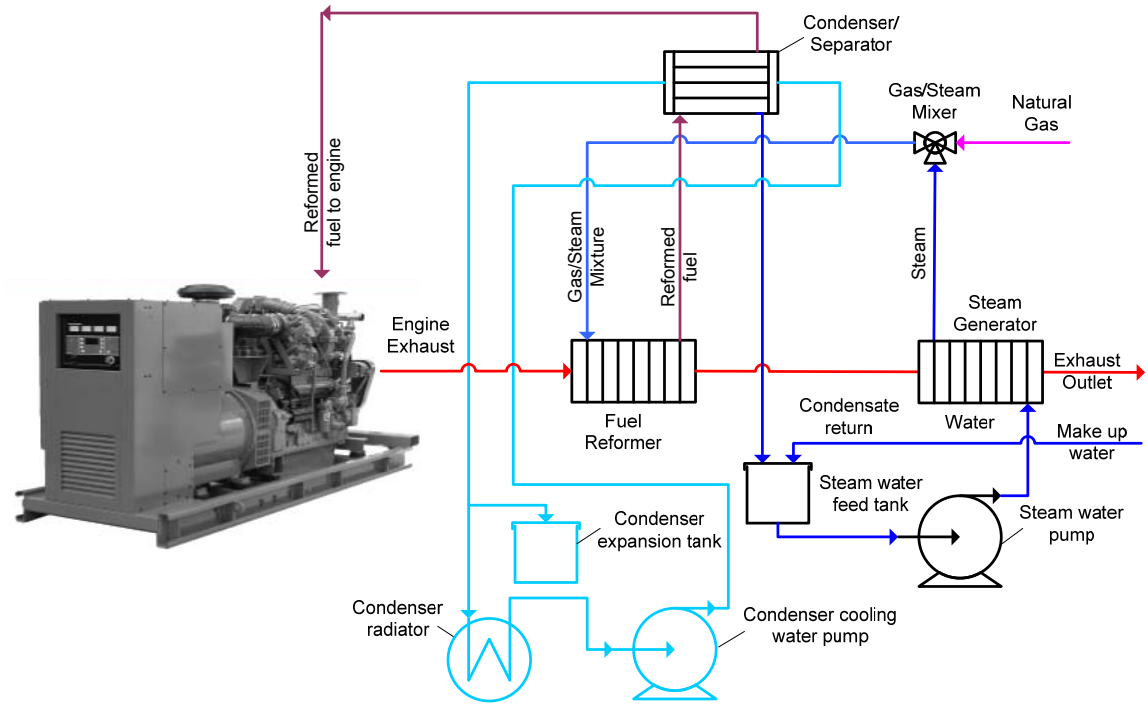

Figure 22. Conceptual design of thermochemical recuperation system for QSK19G engine

Source: Gas Technology Institute

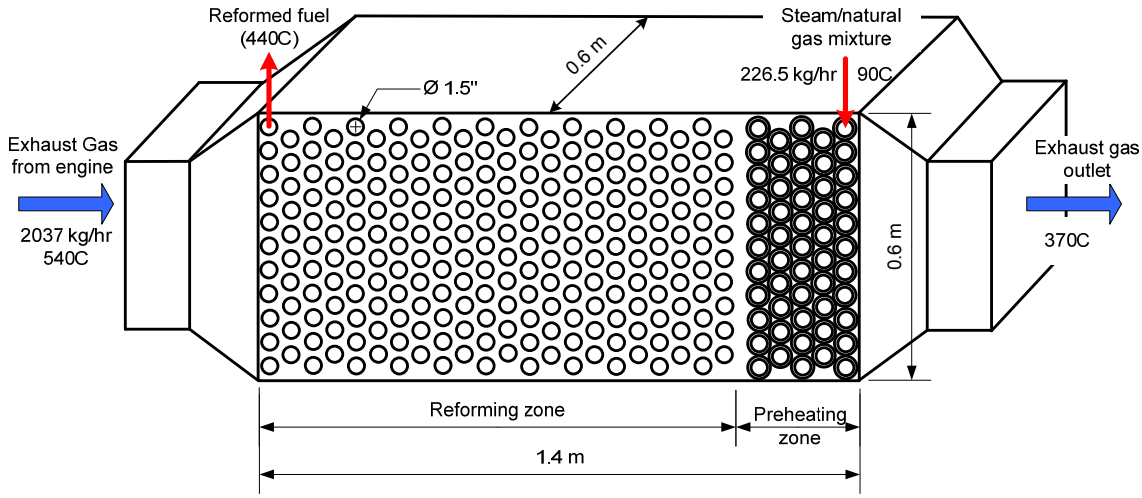

Figure 23. Conceptual design of recuperative reformer for QSK19G engine

Source: Gas Technology Institute

4.0 Laboratory-Scale Testing of Recuperative Reforming for Simulated Exhaust from Cummins QSK19G Natural Gas-Fueled Reciprocating Engine

4.1. Laboratory Studies of Recuperative Reforming Reactor

Beginning with baseline engine operating and performance data provided for the Cummins QSK19G lean burn engine, a conceptual design of a recuperative reforming reactor was scaled and sized for simulating exhaust gas composition, temperature, and flows. The reactor was designed to facilitate testing of different reforming catalysts, as well as varying reforming temperature; means were also provided to vary residence time and steam to carbon ratios within the reactor. This reactor was used for laboratory validation of natural gas conversion and hydrogen yields. The test plan was designed and executed to parametrically evaluate how the performance of recuperative reforming was affected as key process parameters were varied. For example, the impact of exhaust gas temperature on performance of the recuperative reforming reactions was examined. Exhaust gas temperature would be expected to vary as a function of engine load and whether the exhaust gas was directed through the recuperative reformer upstream or downstream of the turbocharger turbine. The steam-to-methane ratio for reforming was expected to affect hydrogen yield, and a minimum requirement to avoid potential coking would need to be established at low reforming temperature.

Laboratory investigations were also planned in such a way as to support validation of analytical tools that being developed and used for system analysis as well as design and scale-up of the recuperative reforming reactor (RRR). The decision was made to design, build, and test a lab-scale thermochemical RRR large enough to represent a meaningful scale-up from prior experiments [12]and capable of reforming enough fuel for possible operation of a laboratory engine. The recuperative reformer was tested under simulated gas engine exhaust gas conditions to measure and compare heat transfer and reforming efficiencies relative to predicted values.

The preliminary design selected for testing in the TCR test rig was a tube-and-shell geometry. However, a plate-and-frame configuration could offer cost savings because of its more compact size.

An existing furnace with two U-tube burners (combustors) was modified to support the testing. Two commercially available recuperators were installed on the exhaust end of one of the U-tube burners and were used to simulate engine exhaust conditions during recuperative reforming tests. Referring to **Figure 24** below, Combustor #1 simulates the engine exhaust flow. This exhaust gas was used as a heat carrier for recuperative reforming reactions occurring in the reformer. Natural gas and steam were metered and mixed prior to a pre-heater (Recuperator 1).

---

12. *Recuperative Reformer for High Efficiency and Ultra-low Emissions DG with Reciprocating Engines*, Final Report: August 2004 – March 2006. April 2006. GTI Project 20094

The preheated mixture was sent to the recuperative reformer (Recuperator 2). Catalyst is installed in tubes within the recuperative reformer (where natural gas and steam flow). The initial design was such that the reformed fuel could be analyzed and then burned in combustor #2. An electrical steam generator was used to produce superheated steam. A sulfur removal system was also used to desulfurize the natural gas prior to reforming. Sulfur removal would also be required for commercial systems.

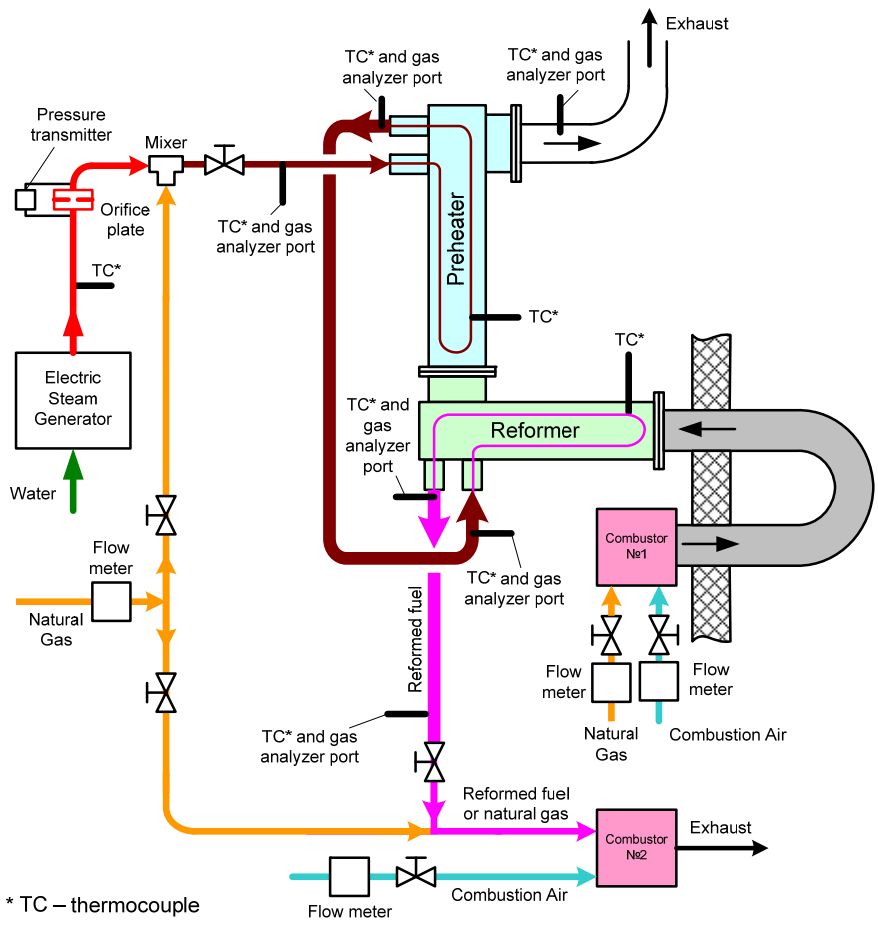

Figure 24. Schematic of laboratory setup for 250 SCFH TCR test rig

Source: Gas Technology Institute

Figure 25 shows a photograph of the heat treat furnace modified to support experiments of TCR for simulated engine exhaust. The end view of the Eclipse recuperator modified to serve as a recuperative reformed is indicated by an arrow. The insulated ductwork and piping in **Figure 25** was part of the TCR test rig along with thermocouples, steam and fuel supply lines and control valves. Bottled gas is supplied to analytical equipment used during the testing.

Figure 25. Photograph of laboratory setup for 250 SCFH TCR test rig
Source: Gas Technology Institute

4.2. Recuperative Reformer

A shop drawing of the commercially available Eclipse recuperator that was modified and used as a recuperative reformer on the TCR test rig is provided in **Figure 26**.

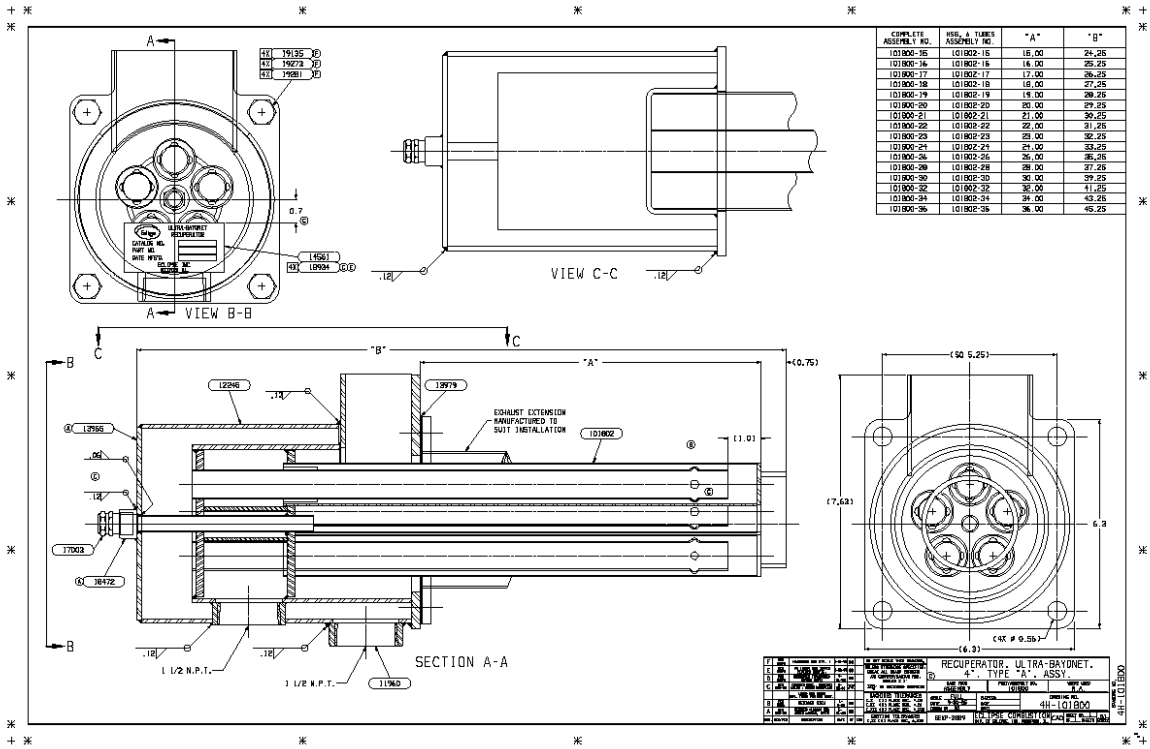

Figure 26. Drawing of eclipse recuperators installed on TCR test rig

Source: ?

Because of the relatively low temperature of the simulated engine exhaust gases, the recuperative reformer was designed so that catalytic inserts could be placed into each of the five tubes shown in the side view of Section A-A of **Figure 26**. A photograph of the recuperator end view with catalytic inserts installed in the tubes is provided in **Figure 27**.

Figure 27. Eclipse recuperator (recuperative reformer) with catalytic inserts installed

Source: Gas Technology Institute

Prior literature searches and discussions with GTI researchers working in fuel processing resulted in the identification of three candidate reforming catalyst suppliers for the inserts required for the test unit: 1) a Ni-Rh catalyst was available from Catacel Corporation; 2) a Rh catalyst was deposited on inserts through a supplier to Miratech; and 3) commercially available nickel oxide discs were available through the GTI fuel processing group. **Figure 28** shows the three fabricated catalytic inserts that were tested in the experimental unit. Catacel supplied insert **a**, Miratech applied Rh on insert **b** and insert c fabricated by GTI **. Figure 29** provides a view of a fresh, individual nickel oxide disc used in configuration **c**.

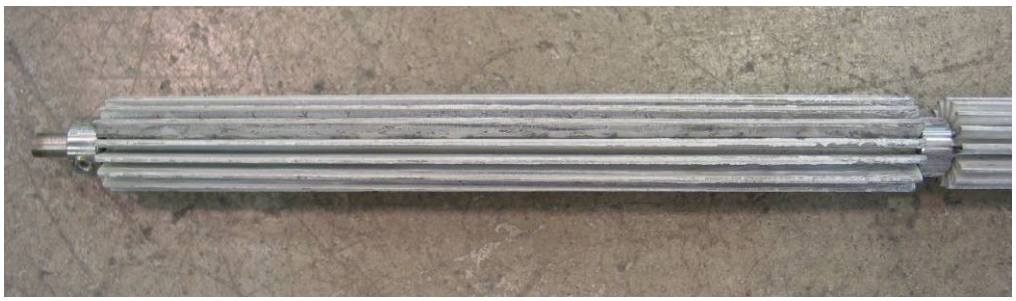

(a)

(b)

(c)

Figure 28. Photographs of catalytic inserts evaluated in TCR test rig

Source: Gas Technology Institute

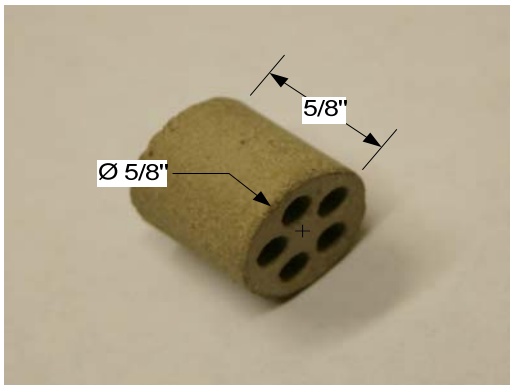

Figure 29. Photograph of an individual nickel oxide catalyst disc

Source: Gas Technology Institute

4.3. Test Plan

The experiments were designed to obtain critical data needed to validate modeling tools for designing recuperative reformers for TCR systems integrated with the Cummins QSK19G lean burn engine. Cummins provided a complete set of performance and design data for this engine including exhaust gas temperatures, compositions and flow rates under different loads. This information was used for system analysis of TCR integrated with the QSK19G lean-burn engine. Laboratory experiments were designed to provide required data to validate modeling assumptions that affect predictions of the impact of TCR on system performance. These key variables include:

Reforming temperature:

- Steam-to-carbon ratio for reforming to target hydrogen composition.
- Gas flow rate (residence time) within the reactor.

Planned experimental conditions:

- Combustor #1 firing rate: 15 kWt - 100 kWt.
- Combustor #2 firing rate: 15 kWt –45 kWt.

Reformer parameters:

- Fuel mass flow rate (natural gas): 0.3 g/sec – 1 g/sec.
- Fuel volumetric flow rate: 0.4 liter/sec – 1.2 liter/sec.
- Air/fuel ratio (by mass): up to 30.
- Exhaust gas temperature at the reformer inlet: 670K-1400K.
- Reformed fuel outlet temperature: 530K – 850K.
- Steam temperature: 500K – 600K.
- Steam/fuel molar ratio: 0.5 – 2.0.

Parameters to be measured in the test plan:

- Air flow rate for both combustors.
- Natural gas flow rate for both combustors.
- Steam flow rate.
- Temperatures. (See **Figure 24** for thermocouples locations.)
- Natural gas, exhaust and reformed gas compositions. (See **Figure 24** for analyzer ports locations.) Water vapor content in reformed fuel would be calculated from other data measurements.

The preliminary test plan matrix is provided in **Table 15** below.

Table 15. Preliminary Test Plan Matrix

Regime No.	1	2	3	4	5	6	7	8	9	10
Combustor #1 firing rate, kW	15	30	45	15	30	45	15	30	45	45
Exhaust gas temperature, K	670	1000	1400	670	1000	1400	670	1000	1400	1000
Fuel flow rate, gram/sec	0.3	0.3	0.3	1	1	1	1	1	1	0.3

Source: Gas Technology Institute

A thermo-well with three thermocouples was installed into each of the reforming reactor tubes to measure the gas temperatures at inlet, middle, and exit of the catalyst bed. In addition, thermocouples were also inserted to measure the inlet and outlet temperatures of the reformer flue and reformer gas. Pressure differences and pressures were also measured by pressure gauges.

4.4. Analysis of Experimental Data

4.4.1. Catalytic Reforming Test Results

One of the test objectives was to measure and compare conversion efficiency of the chosen catalysts for reforming of natural gas with steam. Another objective was to experimentally specify mechanism of catalytic reforming and provide a theoretical model with this mechanism.

In order to specify the mechanism of catalytic reforming experimental data was compared with theoretical prediction based on chemical equilibrium at chosen natural gas/steam composition and reforming temperature. Natural gas composition was repeatedly measured during the tests; average numbers (by volume) for measured components are shown below:

- H_2 = 0.10%
- N_2 = 1.16%
- CH_4 = 94.83%
- CO_2 = 1.02%
- C_2H_4 = 0.001%
- C_2H_6 = 2.36%
- C_3H_8 = 0.33%

- *i*-C_4H_{10} = 0.06%
- *n*-C_4H_{10} = 0.06%

As can be seen from the composition, the main component of natural gas is methane (CH_4), which is 94.83% (by volume). Equilibrium methane conversion rate at certain temperature would be a base to compare with measured methane conversion rate.

Natural gas for reforming was mixed with steam in such proportion that steam to carbon mole ratio would be approximately 2:1. The mixture composition (by volume) is shown below:

- H_2 = 0.033%
- N_2 = 0.382%
- CH_4 = 31.2%
- CO_2 = 0.336%
- C_2H_4 = 0.0003%
- C_2H_6 = 0.776%
- C_3H_8 = 0.109%
- *i*-C_4H_{10} = 0.002%
- *n*-C_4H_{10} = 0.002%
- H_2O = 67.1%

Figure 30 shows calculated equilibrium compositions of natural gas/steam mixture at different reforming temperatures. These compositions were estimated using CHEMKIN software.

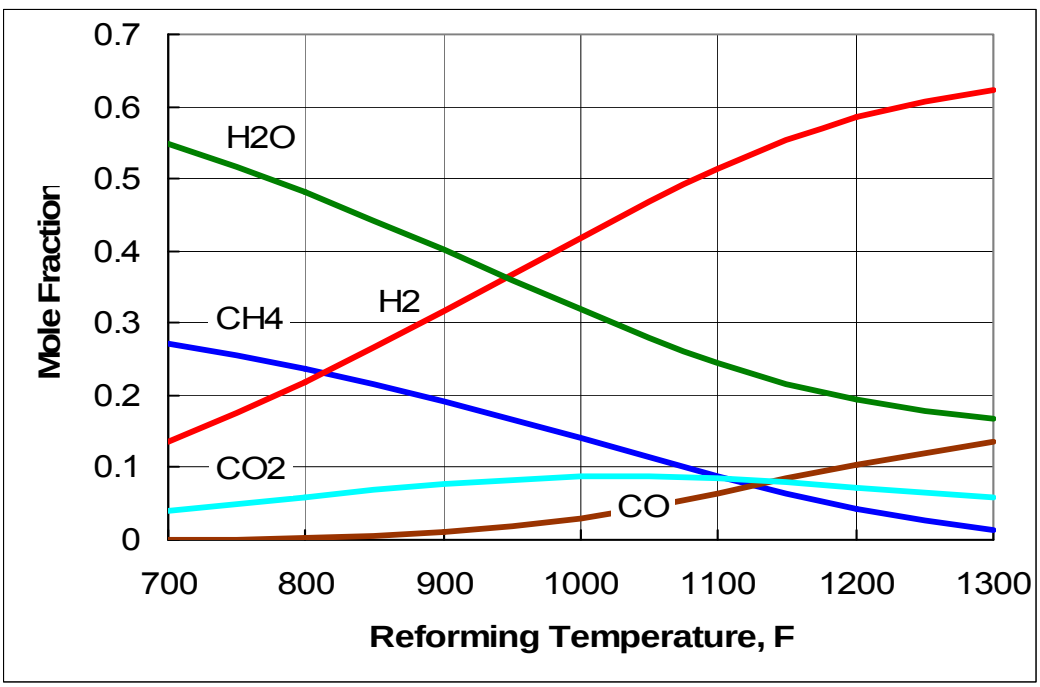

Figure 30. Equilibrium composition for natural gas/steam reforming (steam/carbon=2)

Source: Gas Technology Institute

Methane conversion rate is estimated as

$$\text{Methane Conversion Rate} = 1 - \frac{(\text{outlet mass concentration of methane})}{(\text{inlet mass concentration of methane})} \quad (5)$$

Calculated methane conversion rate at different reforming temperatures is shown in **Figure 31**.

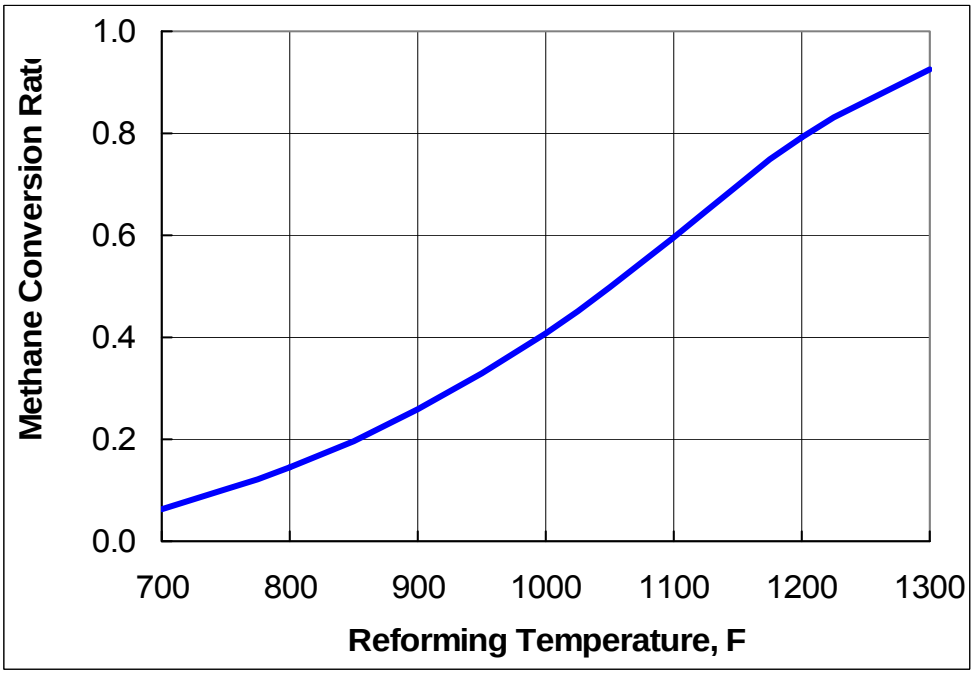

Figure 31. Methane conversion rate by equilibrium

Source: Gas Technology Institute

Reforming process completeness would be more universal parameter to generalize experimental data and then use the data to develop the theoretical model for catalytic reforming.

Reforming process completeness can be estimated as:

$$\text{Process Completeness} = \frac{(\text{measured Methane Conversion Rate})}{(\text{calculated equilibrium Methane Conversion Rate})} \quad (6)$$

Figure 32 shows generalized data for the reforming process completeness for non-catalytic and catalytic reforming.

Space velocity of natural gas/steam mixture in the figure is estimated as:

$$\text{Space Velocity} = \frac{(\text{reforming fuel standard volume flow rate})}{(\text{reformer volume})}, \ [\text{hr}^{-1}] \quad (7)$$

Here the reformer volume is calculated differently for non-catalytic and catalytic reforming. In the case of the non-catalytic reforming, the volume is estimated as total volume of the reformer part with reforming fuel flow. In case of the catalytic reforming, the volume is estimated as heat exchange tubes volume with catalyst inside the tubes.

As can be seen from the **Figure 32**, the Ni-Rh catalyst on corrugated foil is calculated to be more efficient in comparison with two other tested catalysts. This catalyst has the highest space velocity (~3500 hr^{-1}) when the process completeness is close to 1 (**Figure 32**). Non catalytic reforming can be used at very low space velocities (<500 hr^{-1}).

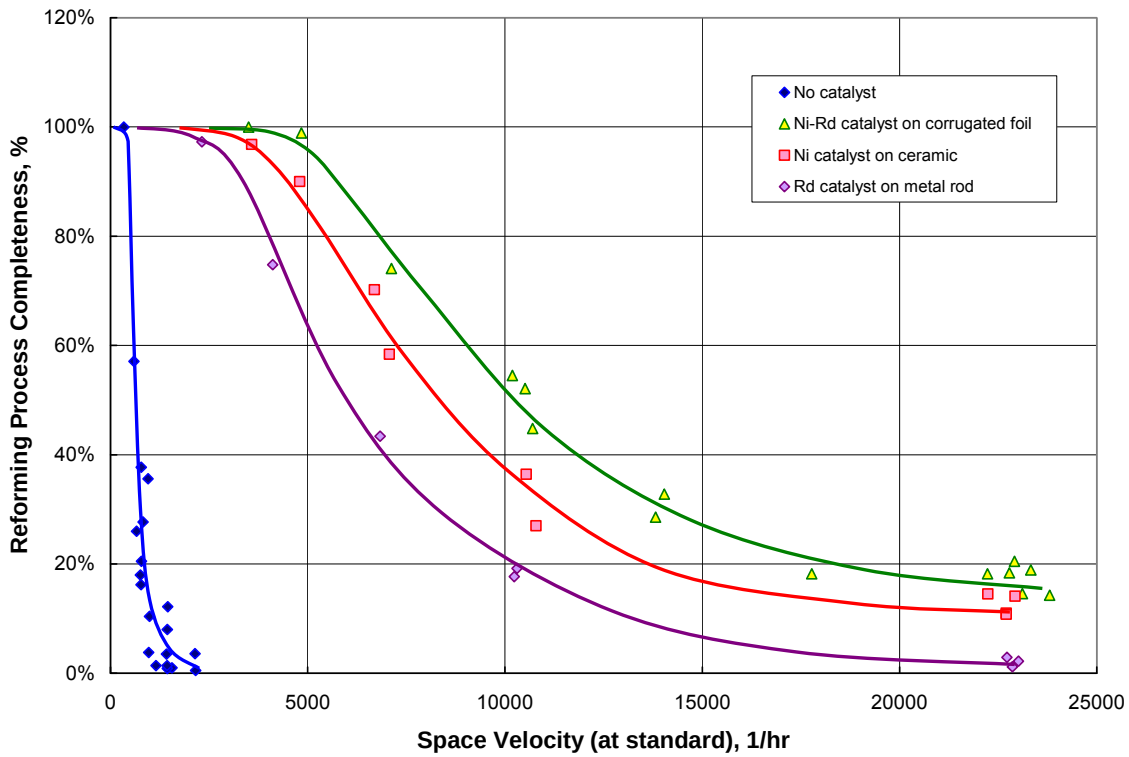

Figure 32. Reforming process completeness vs. space velocity (at standard)

Source: Gas Technology Institute

Figure 33 shows measured hydrogen volume concentration in the reformed fuel against equilibrium prediction vs. space velocity.

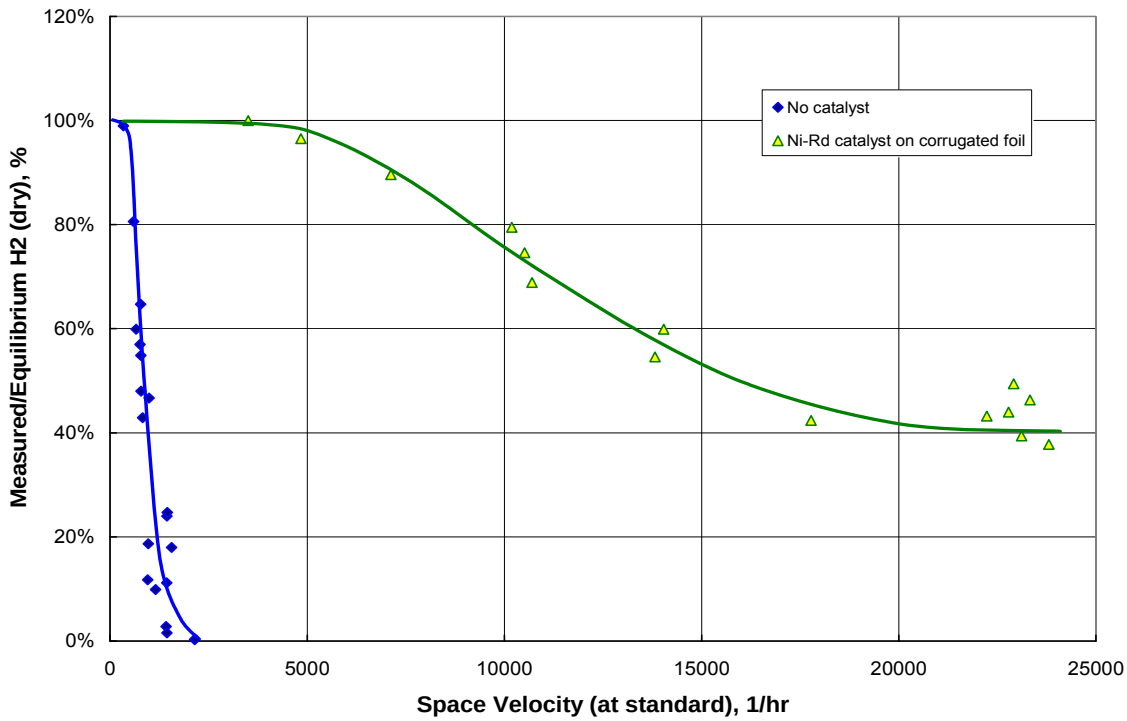

Figure 33. Measured hydrogen volume concentration in reformed fuel compared to equilibrium predictions

Source: Gas Technology Institute

Measured hydrogen volume concentration in the reformed fuel against equilibrium prediction is estimated as:

$$\text{Measured/Equilibrium H2} = \frac{(\text{Measured hydrogen volume outlet concentration})}{(\text{Equilibrium hydrogen volume concentration})} \tag{8}$$

Table 16 shows hydrogen content in the reformed fuel versus reformer outlet temperature and natural gas flow rate for non catalytic reforming and three catalysts. Up to 62% of hydrogen content in the reformed fuel (dry basis) can result from the reforming at tested conditions.

Table 16. Hydrogen content (% volume, dry basis) in reformed fuel

Reformer outlet temperature, °F	780			950		1050
Natural gas flow rate for reforming, SCFH	100	150	330	100	330	100
No catalyst	0.54	0.15	0	8.8		22.6
Rh catalyst on metal rod	33.4	15.5	3.2		10.2	
Ceramic discs with nickel oxide catalyst	41.2	18	4.5		12.6	
Ni-Rh catalyst on corrugated foil	~60	35.4	15.4		34	62

Source: Gas Technology Institute

5.0 Operation of 50 kWe Research Engine with Reformed Fuel from TCR Test Rig

5.1. Goal and Objectives

The goal was to operate a 50 kWe HCCI research engine with reformulated fuel produced by the thermochemical recuperation test rig. A secondary goal was to determine if the TCR rig could be used to supply the engine with fuel if configured for spark-ignited testing.

As stated earlier in this report, a primary design requirement for the recuperative reformer is to recover as much as possible of the waste heat in the exhaust gases and use it to produce a fuel mixture with high hydrogen content from natural gas. The amount of published data on hydrogen-enhanced combustion in reciprocating engines has increased dramatically in recent years. Concurrent with this project, GTI was completing a study on the effects of using hydrogen to control the start of combustion in an engine configured for homogeneous charge compression ignition[13]. Accordingly, it was proposed to use the available single cylinder engine, already configured to fire blends of natural gas and bottled hydrogen, to test operation on reformed fuel produced by the TCR test rig. In this way, engine maps and data already acquired testing HCCI with neat natural gas and blends of natural gas and hydrogen could be compared to operation on reformed fuel that would result from application of TCR under simulated engine exhaust gas conditions.

5.2. Test Plan

Experimental Setup: The reformed fuel flow rate and composition sent to the engine were limited by maximum natural gas flow rate and temperature of reforming in the TCR test rig described in the previous section of this report. **Figure 34** is a simplified flow diagram for the experiment set-up. The TCR test rig produced steam reformed fuel that was supplied to the 50 kWe research engine. The reformed fuel produced in the TCR test rig had to be cooled and compressed to deliver it to the engine that was located about 30 feet away. Water vapor in the reformed fuel was condensed and collected before delivery to the engine. If more reformed fuel was produced than the engine could consume, the fuel could be diverted to a supplemental burner for combustion. The single-cylinder HCCI engine was operated on reformed fuel supplied from the TCR test rig.

Figure 35 is a schematic that depicts how the HCCI engine test bench was configured prior to supplying reformed natural gas from the TCR test rig. Except for the bottled H_2/DME fuel delivery system and the mini-dilution sampling system, the remainder of the experimental set-up was used for the testing in this project.

13 . *Evaluation of Technical Feasibility of Homogeneous Charge Compression Ignition (HCCI) Engine Fueled with Hydrogen, Natural Gas, and DME* DE-FC26-04NT42236 Final Report, March 2008.

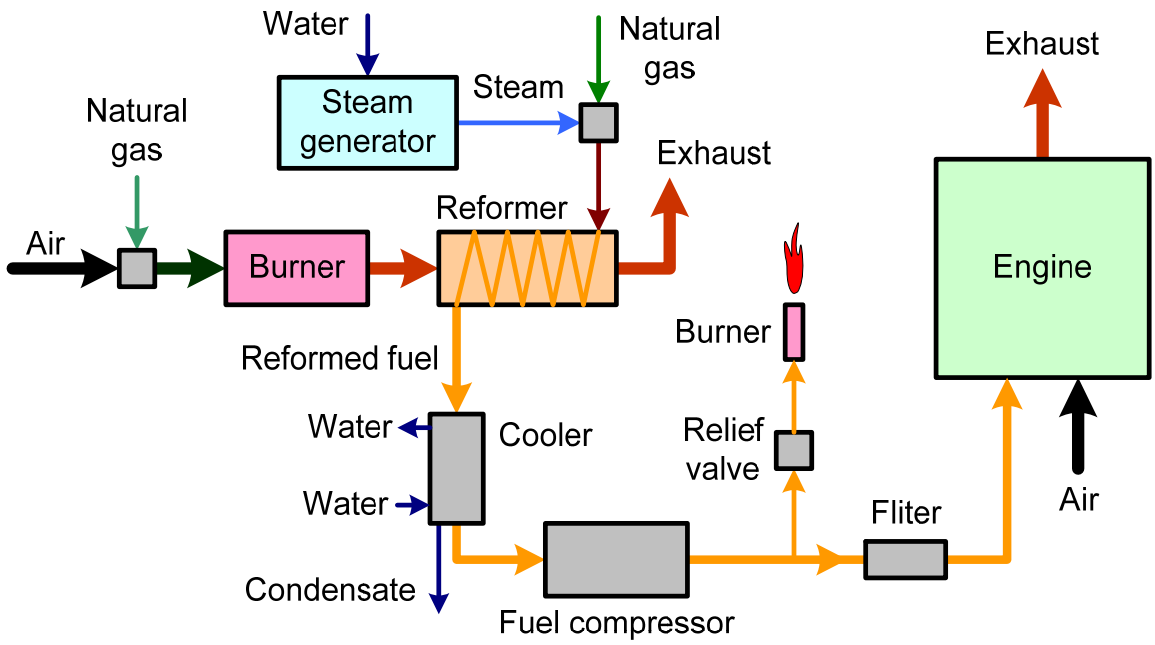

Figure 34: Simplified Flow Diagram of the Reformed Fuel Delivery System

Source: Gas Technology Institute

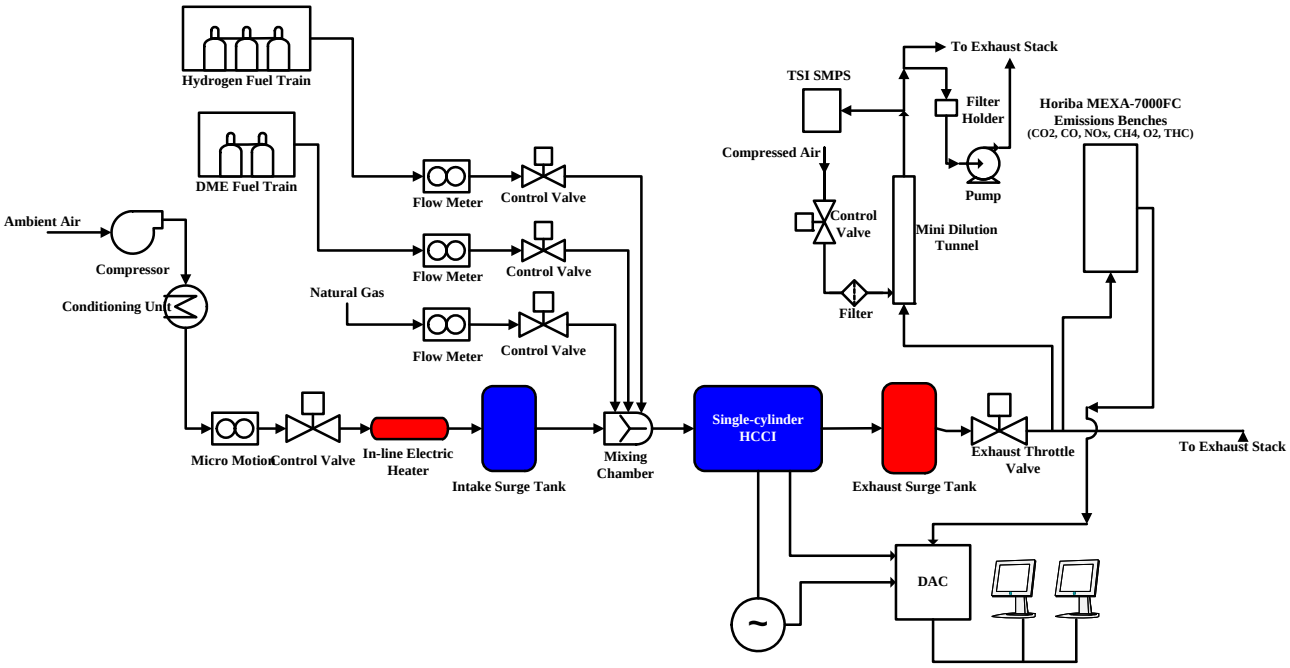

Figure 35. HCCI H_2/Natural gas engine test bench-setup for flow control and data measurement/acquisition system

Source: Gas Technology Institute

Rationale: This test was proposed to obtain data on the performance and emissions from operating a reciprocating internal combustion engine on the resultant fuel blend from thermochemical recuperation. The research engine is currently configured for HCCI, and the engine has been recently mapped for both neat natural gas as well as blends of natural gas and hydrogen. Having mapped the engine with these fuels provides an excellent baseline for comparison to reformed fuel operation. Test results would be analyzed to determine whether HCCI operation on partially reformed fuel from TCR improves performance or emissions.

Predicted Performance: Data obtained while operating the HCCI engine on natural gas and natural gas/ hydrogen blends was available from a DOE- sponsored project. Performance impacts from hydrogen in the fuel include changes in peak cylinder pressure and ignition timing compared to neat natural gas. The DOE project data was used to select the proposed test matrix included later in this plan.

Test Objectives and Technical Approach: The objective for the proposed test was to operate an HCCI test engine with a fuel blend derived from thermochemical recuperation for simulated exhaust gas conditions for a lean-burn stationary gas engine. The HCCI engine was mapped on this reformed fuel blend to compare performance and emissions to test data for similar operating conditions (load, air to fuel ratio, timing, boost pressure, and inlet air temperature).

The technical approach was to operate the TCR test rig for steam reforming of natural gas. Natural gas and steam flow rates to the recuperative reformer were chosen to generate sufficient reformed fuel to enable the HCCI engine to reach a load comparable to that achieved when the HCCI engine was fueled with neat natural gas and natural gas/bottled hydrogen blends.

5.2.1. Test Matrix

Under a project sponsored by the US DOE and GTI, the research engines configured for HCCI was run steady state at 1,800 rpm over the range of operating conditions shown in **Table 17**.

Table 17. Operating conditions for HCCI test engine

Parameter	Units	Low	High
Combustion Timing	ºCA ATDC	2.5	17.5
Stoichiometry, λ		2.5	3.5
Fuel Composition	% H2 Energy Content	0.0	25
Intake Pressure	Bar absolute	1.6	3.5

Source: Gas Technology Institute

In the DOE project, hydrogen was supplied from bottles. Detailed engine performance and emissions data were recorded. For the tests proposed for HCCI operation on steam reformed natural gas produced in the TCR rig, compositions and flow rates were predicted for the reformed fuel as provided in **Table 18** below:

Table 18. Predicted compositions and reformed fuel flow rates of reformed fuel at different reformer temperatures (steam to carbon=2)

Reforming temperature (theoretical), F		60*	600	700	800	900
Reformed fuel major components	H_2, vol %	0.1	18.0	30.0	42.0	53.0
	N_2, vol %	1.3	0.9	0.8	0.7	0.5
	CH_4, vol %	94.8	74.3	57.6	44.0	31.4
	CO, vol %	0	1.5	3.0	4.0	5.0
	CO_2, vol %	1.1	4.0	7.0	8.0	9.0
	C_2H_4, vol %	0	0.1	0.1	0.1	0.0
	C_2H_6, vol %	2.4	1.0	1.3	1.1	1.0
	C_3H_8, vol %	0.3	0.2	0.2	0.1	0.1
Reformed fuel Low Heating Value	Btu/scf	914	729	633.0	533.0	445.0
H2 energy content in reformed fuel	%	**0**	**7.0**	**13.1**	**21.7**	**32.6**
Fuel flow rate	kg/hr	**4.6**	**5.2**	**5.7**	**6.4**	**7.3**
Stochiometric air fuel volume ratio	(scfh air)/(scfh fuel)	9.50	7.53	6.46	5.40	4.37
Stochiometric air flow rate	scfh	2187	2187	2187	2187	2187
Reformed fuel energy	kW	61.6	62.1	62.7	63.8	65.2
Fuel energy gain against natural gas	%	**0**	**0.7**	**1.8**	**3.5**	**5.8**

* natural gas

Source: Gas Technology Institute

The proposed test matrix for HCCI engine testing with reformed fuel is provided below in **Table 19**.

Table 19. Proposed test matrix for the HCCI engine with reformed fuel

RUN	Timing of Peak Cylinder Pressure CA ATDC	Excess Air Ratio	H_2 Content % Energy	$Pressure_{inlet}$ Bar, absolute	$Temperature_{inlet}$ K
1	15	3.3	0	2	469
2	10	2.9	10	1.6	463
3	15	2.5	20	3.5	433
4	10	2.9	25	2.8	438
5	10	2.9	10	1.6	463
6	15	3.3	20	3.5	436
7	15	3.3	30	3.5	463

Source: Gas Technology Institute

5.2.2. Test Procedures

For the testing of HCCI combustion with reformed fuel, the following procedures were followed. The TCR test rig was operated to achieve steady state reformed fuel composition with defined hydrogen content according to the test matrix in **Table 19**. The target reformed fuel flow rate was initially set slightly higher (perhaps 5%-10%) than what was called for in the test matrix and then trimmed as required. Reformed fuel was pumped with the fuel compressor to pressurize the fuel delivery line up to 40 psig. While the reforming process was stabilizing, all reformed fuel was burned out in the small burner after the compressor. A three-way valve was installed in the fuel delivery system at the engine inlet. It permitted switching the engine

operation from natural gas to reformed fuel. The valve setting that allows reformed fuel to be delivered to the engine was opened when hydrogen content in the reformed fuel is stable and corresponds to specified value according to the test matrix. Reformed fuel flow rate to the engine cylinders was controlled and kept constant, and excess reformed fuel was burned out in the small burner.

The engine speed was set at 1,800 rpm using the motoring dynamometer on the engine test cell. The exhaust back pressure was set to 1.5 bar. The oil and coolant temperatures were set to 100°C. The intake pressure was set to match the test case. The inlet temperature was set to slightly lower than the temperature predicted by Digital Engine's simulations. Once the intake temperature has stabilized, the air mass flow rate was noted. Knowing the stochiometric air-to-fuel ratio for the desired blend of reformed fuel, the fueling rate was set to match the excess air ratio for the test case. The fuel was added slowly, and the effects were monitored. If the combustion occurred too quickly, or did not occur at all, the fuel was shut off, and the intake temperature adjusted. The optimization of fuel rate and intake temperature settings was repeated until stable combustion (with a timing of peak cylinder pressure near that of the test case) occurred. Once stable combustion occurred, the intake temperature was raised or lowered slightly to advance or retard the timing of peak cylinder pressure to the location specified by the test case. Once stable combustion with the correct timing was reached, data acquisition was performed.

Natural gas and steam temperature/flow rate to the reformer in the TCR test rig was controlled to match required test conditions. Hydrogen content in the reformed fuel produced in the TCR rig was monitored with a gas chromatograph and controlled by reforming temperature. The reforming temperature was adjusted by changing firing rate for the burner that simulates the engine exhaust. Reformed fuel pressure in delivery line to the test engine was controlled by a relief valve set to 40psig.

For the HCCI test engine, engine speed was controlled by a motoring dynamometer. Intake pressure and temperature were varied as per the test plan. An electric heater was used to vary intake temperature. Fuel flow rate to the engine was needle valve controlled by an MTS Adapt PIC controller. The number of parameters measured by the engine data acquisition system (DAS) is too great to list. However, some of the critical ones and means are included below:

5.2.3. Engine DAS Measurements and Methods

- Engine speed – BEI optical shaft encoder
- Engine torque – In-line torque flange torque transducer
- Air mass flow rate – Micro Motion flow sensor
- Intake pressure – Pressure transducer
- Intake temperature – Thermocouple
- Exhaust pressure – Pressure transducer
- Exhaust temperature – Thermocouple
- Cooling water inlet temperature – Thermocouple

- Cooling water outlet temperature – Thermocouple
- Engine oil inlet temperature – Thermocouple
- Fuel mass flow rate to the engine – Micro Motion flow sensor
- Fuel pressure – pressure transducer
- Fuel temperature – Thermocouple
- In cylinder pressure trace – AVL in cylinder pressure transducer and BEI optical shaft encoder fed into MTS CAS system
- Heat release data – MTS CAS system
- Emissions data – Horiba MEXA 7100 measuring, CO, CO_2, O_2, NO_X, THC and CH_4

5.2.4. Data Analysis Procedure

From the reformed fuel composition, the fuel heating value and stochiometric air flow rate were estimated. From the engine data taken, the power, brake mean effective pressure (BMEP), and indicated mean effective pressure (IMEP) were calculated. From the fueling rate and energy content in the fuel, the thermal efficiency was calculated. For a given experimental run, an overall system efficiency was calculated based upon the flow rate and lower heating value for the natural gas fed into the TCR rig and the brake power measured at the engine. Brake-specific emissions numbers were calculated using the Horiba emissions data and the calculated engine power. Brake-specific fuel consumption numbers were calculated based upon the reformulated fuel consumed by the engine and the natural gas flowing into the TCR rig.

The BMEP, efficiency, heat release, and pressure trace data were compared to the data gathered operating the engine on straight natural gas and natural gas/bottled hydrogen blends.

5.2.5. Quality Assurance Procedures

To ensure that the data collected is as accurate as possible, the laboratory equipment is maintained and calibrated on a regular basis. Key data acquisition equipment was thoroughly checked and calibrated before the DOE HCCI testing. The Horiba bench was zeroed and spanned daily during test runs to ensure the most accurate emissions data. Samples of the line natural gas were taken and analyzed to confirm composition. The reformed fuel generated in the TCR rig was monitored using gas chromatography to verify its composition. In addition, the data was reviewed daily and compared with computational simulation results.

5.2.6. Data Results (July 17-18, 2007, and July 29, 2007)

All data reported were taken at a timing of peak cylinder pressure of 10 degrees ATDC. **Table 20** shows data taken on line natural gas. This data, along with previously recorded data, served as a baseline for the reformed fuel data.

Table 20. Data taken on line natural gas

% Hydrogen	Line NG	Line NG
Intake Manifold Temp (deg C)	164.153244	180.747421
Exhaust Manifold Temp (deg C)	338.641327	297.384644
Coolant Out Temp (deg C)	99.977051	107.817894
Peak Cylinder Pressure (deg ATDC)	10.310057	9.529058
Peak Cylinder Pressure (bar)	97.585045	88.125496
Speed (rpm)	1798.473511	1799.491699
BMEP (bar)	**5.993353**	**4.118842**
Power (kW)	17.883614	12.482165
Torque (ft-lbs)	71.124352	48.879139
Engine Gas Flow Rate(kg/hr)	3.335642	2.606653
Fuel Flow Fate Factor		1
Natural gas flow rate (kg/hr)	3.335642	2.606653
BSFC (g/kwh)	186.5194585	208.8301989
NG energy flow rate (mJ/hr)	150.10389	117.299385
NG energy flow rate (kW)	41.695525	32.5831625
LHV, mix	45	45
Energy flow rate, engine (MJ/hr)	150.10389	117.299385
Energy flow rate, engine (kw)	41.695525	32.5831625
Thermal Efficiency, system	**42.89095293**	**38.30862336**
Excess Air Ratio actual	**3.662881936**	**4.53122**
Engine Efficiency	**42.89095293**	**38.30862336**
CO(H)(%)	0.235323	0.140481
CO(L)(ppm)	341.870605	842.368469
CO_2(%)	2.914466	2.143247
CH_4(ppm)	1643.54895	1531.812988
CO_2(%)	0.04376	0.00534
O_2(%)	14.71506	15.85713
NO_x(ppm)	0.914927	-6.150763
THC(ppm)	1876.973999	1647.212036
Brake Specific NOx - AVL(g/kWh)	0.012431	-0.114326
Brake Specific HC - AVL(g/kWh)	9.167571	11.018735
Air/Fuel Intake Manifold Pressure(bar)	**2.006266**	**1.989751**

Source: Gas Technology Institute

The data in **Table 21** was taken with 2.4% hydrogen in the reformed fuel. System efficiencies range from 35.7% at a excess air ratio of 4.6, to 44.0% at a excess air ratio of 2.7. The data indicates 1% increase in system efficiency over engine efficiency. The overall and engine efficiency is lower than that recorded on line natural gas. This is attributed to lack of knowledge as to the precise makeup of the reformulated fuel, which was known to vary during the testing.

Table 21. Data at 2.0 bar, 2.4% hydrogen

% Hydrogen	**2.40**	**2.40**	**2.40**	**2.40**	**2.40**	**2.40**	**2.40**	**2.40**	**2.40**
Intake Manifold Temp (deg C)	162.009	161.358	155.181	155.251	145.739	154.986	167.261	175.539	174.204
Exhaust Manifold Temp (deg C)	332.973	336.793	359.504	360.328	389.257	360.087	319.208	297.796	291.761
Coolant Out Temp (deg C)	99.408	99.329	99.458	98.107	99.126	97.686	97.682	98.962	99.191
Peak Cylinder Pressure (deg ATDC)	9.528	10.241	9.668	9.491	10.632	10.604	10.080	9.914	10.342
Peak Cylinder Pressure (bar)	100.527	97.864	108.037	109.557	114.464	103.967	94.554	86.337	84.501
Speed (rpm)	1798.635	1798.602	1798.662	1798.588	1798.662	1798.608	1798.622	1798.635	1798.588
BMEP (bar)	**6.060**	**5.992**	**7.222**	**7.164**	**8.222**	**6.969**	**5.320**	**3.980**	**3.882**
Power (kW)	18.361	18.152	21.841	21.684	24.827	21.088	16.104	12.054	11.756
Torque (ft-lbs)	71.916	71.109	85.700	85.021	97.575	82.703	63.131	47.229	46.066
Engine Gas Flow Rate(kg/hr)	3.490	3.477	3.970	3.960	4.511	3.839	3.103	2.655	2.636
Fuel Flow Fate Factor	1	1	1	1	1	1	1	1	1
Natural gas flow rate (kg/hr)	3.490	3.477	3.970	3.960	4.511	3.839	3.103	2.655	2.636
BSFC (g/kwh)	190.067	191.576	181.759	182.649	181.711	182.051	192.687	220.236	224.210
NG energy flow rate (mJ/hr)	157.037	156.485	178.643	178.222	203.011	172.760	139.637	119.461	118.608
NG energy flow rate (kW)	43.622	43.468	49.623	49.506	56.392	47.989	38.788	33.184	32.947
LHV, mix	45.6	45.6	45.6	45.6	45.6	45.6	45.6	45.6	45.6
Energy flow rate, engine (MJ/hr)	159.131	158.572	181.025	180.599	205.718	175.063	141.499	121.054	120.189
Energy flow rate, engine (kw)	44.203	44.048	50.285	50.166	57.144	48.629	39.305	33.626	33.386
Thermal Efficiency, system	**42.090**	**41.759**	**44.014**	**43.800**	**44.026**	**43.944**	**41.518**	**36.325**	**35.681**
Excess Air Ratio actual	**3.469**	**3.489**	**3.065**	**3.109**	**2.730**	**3.219**	**3.922**	**4.498**	**4.583**
Engine Efficiency	**41.537**	**41.209**	**43.435**	**43.224**	**43.447**	**43.366**	**40.972**	**35.847**	**35.211**
CO(H)(%)	0.115	0.119	0.126	0.128	0.137	0.147	0.173	0.219	0.276
CO(L)(ppm)	322.052	325.432	244.009	238.016	232.688	269.067	497.019	979.624	1545.732
CO_2(%)	2.776	2.810	3.260	3.271	3.722	3.190	2.566	2.208	2.104
CH_4(ppm)	1603.588	1616.082	1698.518	1731.756	1747.418	1714.640	1530.300	1473.942	1578.718
CO_2(%)	0.041	0.054	0.091	0.095	0.106	0.114	0.118	0.121	0.122
O_2(%)	14.840	14.910	13.699	13.682	12.711	13.903	15.371	16.113	16.263
NO_x(ppm)	-1.183	0.092	2.629	2.577	18.921	0.647	-2.154	-2.701	-2.801
THC(ppm)	1805.842	1810.628	1905.834	1936.153	2022.847	1923.650	1746.473	1707.357	1801.943
Brake Specific NOx - AVL(g/kWh)	-0.015	0.001	0.029	0.029	0.187	0.007	-0.032	-0.052	-0.058
Brake Specific HC - AVL(g/kWh)	8.439	8.640	7.546	7.810	7.188	8.003	9.341	11.951	13.364
Air/Fuel Intake Pressure(bar)	**1.988**	**1.991**	**1.991**	**2.006**	**2.003**	**2.013**	**2.004**	**1.990**	**2.004**

Source: Gas Technology Institute

The data in **Table 22** was taken with approximately 15% hydrogen in the reformed fuel by volume. Engine efficiencies are close to, if not slightly better than, data taken on straight natural gas. The system efficiencies are over 1% higher than the engine efficiencies. Again, the composition of the reformed fuel varied slightly during these tests.

Table 22. Data at 2.0 bar, 15% hydrogen

% Hydrogen	13.5	12.0	13.0	14.0	15.3
Intake Manifold Temp (deg C)	158.218	153.024	144.185	142.818	141.920
Exhaust Manifold Temp (deg C)	333.136	356.023	378.048	384.666	387.546
Coolant Out Temp (deg C)	100.813	99.129	103.299	99.390	98.607
Peak Cylinder Pressure (deg ATDC)	10.165	10.257	10.140	10.620	10.321
Peak Cylinder Pressure (bar)	98.987	104.536	111.501	111.863	114.168
Speed (rpm)	1799.485	1799.546	1799.478	1799.485	1799.492
BMEP (bar)	6.113	6.996	8.057	8.354	8.376
Power (kW)	18.511	21.182	24.326	25.279	25.333
Torque (ft-lbs)	72.544	83.027	95.609	99.145	99.400
Engine Gas Flow Rate(kg/hr)	3.622	3.994	4.498	4.648	4.697
Fuel Flow Fate Factor	0.930	0.940	0.930	0.928	0.928
Natural gas flow rate (kg/hr)	3.369	3.754	4.183	4.314	4.359
BSFC (g/kwh)	181.973	177.226	171.944	170.645	172.049
NG energy flow rate (mJ/hr)	151.583	168.930	188.224	194.118	196.137
NG energy flow rate (kW)	42.106	46.925	52.284	53.922	54.482
LHV, mix	42.3	43	42.6	42.5	42.5
Energy flow rate, engine (MJ/hr)	153.213	171.726	191.597	197.558	199.612
Energy flow rate, engine (kw)	42.559	47.702	53.221	54.877	55.448
Thermal Efficiency, system	43.962	45.140	46.527	46.881	46.498
Excess Air Ratio actual	3.619	3.265	2.921	2.857	2.832
Engine Efficiency	43.495	44.405	45.707	46.065	45.689
CO(H)(%)	0.086	0.074	0.072	0.076	0.074
CO(L)(ppm)	334.422	262.160	243.542	252.637	247.769
CO_2(%)	2.779	3.119	3.523	3.608	3.626
CH_4(ppm)	1700.548	1806.837	1846.340	1854.300	1848.615
CO_2(%)	0.043	0.066	0.078	0.082	0.085
O_2(%)	14.500	13.777	12.840	12.598	12.630
NO_x(ppm)	0.062	3.202	12.153	12.416	16.209
THC(ppm)	1766.833	1873.081	1934.771	1942.682	1940.385
Brake Specific NOx - AVL(g/kWh)	0.001	0.037	0.122	0.120	0.157
Brake Specific HC - AVL(g/kWh)	8.252	7.737	6.965	6.757	6.740
Air/Fuel Intake Pressure(bar)	2.001	1.999	1.991	2.001	2.007

Source: Gas Technology Institute

The data in **Table 23** was taken with approximately 7.5% hydrogen by volume in the reformed fuel. Engine efficiencies are very close to, or slightly lower than, data taken on straight natural gas. The system efficiencies are approximately 1% higher than the engine efficiencies.

Table 23. Data at 2.0 bar, 7.5% hydrogen in reformed fuel

% Hydrogen	**7.30**	**7.00**	**7.00**	**6.61**	**7.42**	**7.41**	**7.11**
Intake Manifold Temp (deg C)	159.279	162.079	162.054	161.936	154.088	154.197	142.512
Exhaust Manifold Temp (deg C)	336.671	328.796	329.488	329.979	355.264	356.874	392.734
Coolant Out Temp (deg C)	99.794	97.453	97.724	98.000	94.316	97.787	101.299
Peak Cylinder Pressure (deg ATDC)	10.823	10.450	10.364	10.814	10.341	9.638	10.821
Peak Cylinder Pressure (bar)	96.962	97.314	96.857	94.620	104.830	106.682	112.507
Speed (rpm)	1799.478	1799.519	1799.546	1799.768	1799.525	1799.478	1799.492
BMEP (bar)	**6.055**	**5.948**	**5.915**	**5.923**	**7.000**	**6.882**	**8.254**
Power (kW)	18.361	18.035	17.936	17.960	21.220	20.862	24.980
Torque (ft-lbs)	71.853	70.582	70.190	70.286	83.072	81.671	97.951
Engine Gas Flow Rate(kg/hr)	3.542	3.436	3.425	3.433	3.907	3.915	4.537
Fuel Flow Fate Factor	0.947	0.972	0.972	0.972	0.973	0.972	0.973
Natural gas flow rate (kg/hr)	3.354	3.340	3.330	3.337	3.802	3.806	4.414
BSFC (g/kwh)	182.661	185.172	185.631	185.774	179.161	182.422	176.723
NG energy flow rate (mJ/hr)	150.926	150.284	149.828	150.145	171.085	171.259	198.650
NG energy flow rate (kW)	41.924	41.745	41.619	41.707	47.524	47.572	55.181
LHV, mix	43.1	44.1	44.1	44.1	44.2	44.2	44.3
Energy flow rate, engine (MJ/hr)	152.643	151.520	151.061	151.380	172.706	173.060	200.987
Energy flow rate, engine (kw)	42.401	42.089	41.961	42.050	47.974	48.072	55.830
Thermal Efficiency, system	**43.797**	**43.203**	**43.096**	**43.063**	**44.653**	**43.854**	**45.269**
Excess Air Ratio actual	**3.675**	**3.679**	**3.684**	**3.657**	**3.229**	**3.217**	**2.773**
Engine Efficiency	**43.304**	**42.850**	**42.744**	**42.712**	**44.233**	**43.398**	**44.742**
CO(H)(%)	0.103	0.085	0.083	0.080	0.061	0.062	0.058
CO(L)(ppm)	383.342	392.832	376.201	376.181	267.223	259.095	238.205
CO_2(%)	2.813	2.731	2.752	2.747	3.133	3.141	3.693
CH_4(ppm)	1826.874	1765.960	1750.500	1748.600	1800.455	1797.043	1887.323
CO_2(%)	0.030	0.065	0.066	0.068	0.089	0.090	0.099
O_2(%)	14.449	14.709	14.722	14.682	13.822	13.800	12.428
NO_x(ppm)	2.144	2.147	1.375	1.669	4.169	4.527	19.217
THC(ppm)	1864.757	1830.792	1838.220	1839.063	1915.814	1897.188	2036.447
Brake Specific NOx - AVL(g/kWh)	0.029	0.029	0.019	0.023	0.048	0.053	0.188
Brake Specific HC - AVL(g/kWh)	8.994	8.838	8.921	8.929	7.875	7.940	7.165
Air/Fuel Intake Pressure(bar)	**2.005**	**2.003**	**2.000**	**1.995**	**2.002**	**2.003**	**1.993**

Source: Gas Technology Institute

The data in **Table 24** was taken with approximately 25% hydrogen in the fuel by volume. Engine efficiencies are slightly lower than data taken on straight natural gas. The system efficiencies are 3% higher than the engine efficiencies and show approximately a 2.5% gain over operation on line natural gas.

Table 24. Data at 2.0 bar, 25% hydrogen in reformed fuel

% Hydrogen	**25.9**	**24.9**	**24.9**	**24.9**	**29.8**	**27.3**
Intake Manifold Temp (deg C)	148.391	148.616	148.825	148.658	141.706	135.111
Exhaust Manifold Temp (deg C)	321.849	330.392	331.798	331.764	348.393	375.476
Coolant Out Temp (deg C)	101.449	98.897	99.015	99.026	101.819	104.611
Peak Cylinder Pressure (deg ATDC)	10.924	10.113	10.590	10.384	9.653	10.843
Peak Cylinder Pressure (bar)	93.519	99.218	96.891	97.939	105.557	107.264
Speed (rpm)	1799.512	1799.505	1799.519	1799.498	1799.512	1799.519
BMEP (bar)	**5.755**	**6.138**	**6.102**	**6.107**	**6.942**	**7.853**
Power (kW)	17.452	18.608	18.499	18.516	21.040	23.789
Torque (ft-lbs)	68.299	72.842	72.410	72.479	82.381	93.193
Engine Gas Flow Rate(kg/hr)	3.695	3.836	3.829	3.827	4.365	4.810
Fuel Flow Fate Factor	0.872	0.880	0.880	0.880	0.848	0.864
Natural gas flow rate (kg/hr)	3.222	3.376	3.370	3.367	3.702	4.156
BSFC (g/kwh)	184.614	181.401	182.160	181.860	175.941	174.688
NG energy flow rate (mJ/hr)	144.984	151.899	151.637	151.532	166.583	187.007
NG energy flow rate (kW)	40.273	42.194	42.121	42.092	46.273	51.946
LHV, mix	40.2	40.6	40.6	40.6	39.2	39.9
Energy flow rate, engine (MJ/hr)	148.531	155.735	155.466	155.358	171.123	191.913
Energy flow rate, engine (kw)	41.259	43.260	43.185	43.155	47.534	53.309
Thermal Efficiency, system	**43.334**	**44.101**	**43.917**	**43.990**	**45.470**	**45.796**
Excess Air Ratio actual	**3.844**	**3.660**	**3.632**	**3.649**	**3.338**	**2.969**
Engine Efficiency	**42.299**	**43.015**	**42.836**	**42.906**	**44.263**	**44.625**
CO(H)(%)	0.005	0.076	0.073	0.076	0.070	0.070
CO(L)(ppm)	18.228	427.997	400.143	415.877	329.207	291.410
CO_2(%)	0.061	2.727	2.746	2.742	3.020	3.432
CH_4(ppm)	0.159	1642.976	1613.615	1645.741	1641.386	1754.591
CO_2(%)	0.016	0.036	0.040	0.043	0.083	0.093
O_2(%)	-0.038	14.606	14.495	14.482	13.888	13.002
NO_x(ppm)	0.131	2.447	2.980	2.440	3.474	14.332
THC(ppm)	-1.456	1698.291	1698.708	1705.947	1692.785	1768.761
Brake Specific NOx - AVL(g/kWh)	0.002	0.032	0.039	0.032	0.040	0.148
Brake Specific HC - AVL(g/kWh)	-0.007	8.004	7.978	8.150	7.077	6.567
Air/Fuel Intake Pressure(bar)	**1.999**	**2.005**	**1.989**	**1.998**	**2.008**	**2.004**

Source: Gas Technology Institute

The data in **Table 25** was taken at an intake pressure of 2.5 bar. Richer excess air ratios were not possible due to inability to supply the required fuel fraction. Both baseline efficiencies and gains in efficiencies were higher than the 2.0 bar cases.

Table 25. Data at 2.5 bar

% Hydrogen	**2.40**	**2.40**		**15.6**	**15.6**		**5.40**	**5.40**		**32.0**	**32.0**
Intake Manifold Temp (deg C)	154.723	160.086		142.466	142.114		143.302	143.037		137.044	136.131
Exhaust Manifold Temp (deg C)	284.805	274.513		314.991	316.937		315.155	315.660		299.264	299.468
Coolant Out Temp (deg C)	93.658	97.807		96.955	97.600		98.231	98.219		104.667	103.008
Peak Cylinder Pressure (deg ATDC)	10.233	9.460		9.973	9.651		10.581	10.488		9.796	10.632
Peak Cylinder Pressure (bar)	115.532	113.880		127.840	128.820		124.541	124.590		122.460	119.089
Speed (rpm)	1798.642	1798.649		1799.471	1799.512		1799.519	1799.492		1799.505	1799.498
BMEP (bar)	**7.146**	**6.413**		**8.983**	**9.058**		**8.904**	**8.887**		**8.222**	**8.137**
Power (kW)	21.569	19.364		27.184	27.369		26.984	26.933		24.907	24.646
Torque (ft-lbs)	84.802	76.101		106.597	107.493		105.671	105.461		97.567	96.566
Engine Gas Flow Rate(kg/hr)	3.666	3.380		4.693	4.711		4.451	4.455		4.782	4.756
Fuel Flow Fate Factor	1	1		0.917	0.917		0.976	0.976		0.833	0.833
Natural gas flow rate (kg/hr)	3.666	3.380		4.303	4.320		4.345	4.348		3.983	3.961
BSFC (g/kwh)	169.957	174.548		158.294	157.832		161.005	161.434		159.926	160.728
NG energy flow rate (mJ/hr)	164.961	152.096		193.637	194.386		195.505	195.655		179.246	178.260
NG energy flow rate (kW)	45.822	42.249		53.788	53.996		54.307	54.349		49.791	49.517
LHV, mix	45.6	45.6		42	42		44.4	44.4		38.6	38.6
Energy flow rate, engine (MJ/hr)	167.160	154.124		197.086	197.848		197.641	197.793		184.578	183.562
Energy flow rate, engine (kw)	46.433	42.812		54.746	54.958		54.900	54.943		51.272	50.990
Thermal Efficiency, system	**47.071**	**45.833**		**50.539**	**50.687**		**49.688**	**49.556**		**50.023**	**49.774**
Excess Air Ratio actual	**4.329**	**4.615**		**3.691**	**3.652**		**3.654**	**3.651**		**3.947**	**3.982**
Engine Efficiency	**46.451**	**45.230**		**49.654**	**49.800**		**49.151**	**49.020**		**48.578**	**48.336**
CO(H)(%)	0.214	0.229		0.084	0.085		0.065	0.067		0.084	0.089
CO(L)(ppm)	602.218	619.838		304.555	296.236		350.055	356.799		471.755	510.937
CO_2(%)	2.404	2.269		2.795	2.835		2.774	2.781		2.501	2.508
CH_4(ppm)	1425.594	1304.432		1553.337	1595.638		1669.201	1687.356		1457.725	1433.140
CO_2(%)	0.097	0.090		0.042	0.038		0.094	0.094		0.103	0.102
O_2(%)	15.367	16.193		14.413	14.219		14.644	14.509		14.997	15.129
NO_x(ppm)	-1.588	-2.418		0.244	0.588		3.563	3.506		1.742	1.795
THC(ppm)	1634.854	1519.640		1670.080	1681.076		1749.861	1760.489		1470.121	1483.095
Brake Specific NOx - AVL(g/kWh)	-0.023	-0.039		0.003	0.007		0.041	0.041		0.022	0.023
Brake Specific HC - AVL(g/kWh)	8.564	8.730		6.919	6.869		7.289	7.348		6.645	6.741
Air/Fuel Intake Pressure(bar)	**2.508**	**2.491**		**2.508**	**2.495**		**2.503**	**2.504**		**2.495**	**2.501**

Source: Gas Technology Institute

Note on the calculation of Excess Air Ratio: The excess air ratio, λ, is calculated using a stoichiometric air/fuel ratio of 14.5. The source of this number is *Internal Combustion Engine Fundamentals* by Heywood. When the analysis results of the natural gas sample are available, the stoichiometric air/fuel ratio and the subsequent excess air ratios may change slightly.

The chart shown in **Figure 36** shows the range of IMEP and excess air ratios performed. Greater IMEP values would require higher intake pressure or richer excess air ratios (not possible with the available fuel). Data at higher excess air ratios can be taken easily, but the low BMEP values achieved with very lean combustion make the data valuable only for model validation.

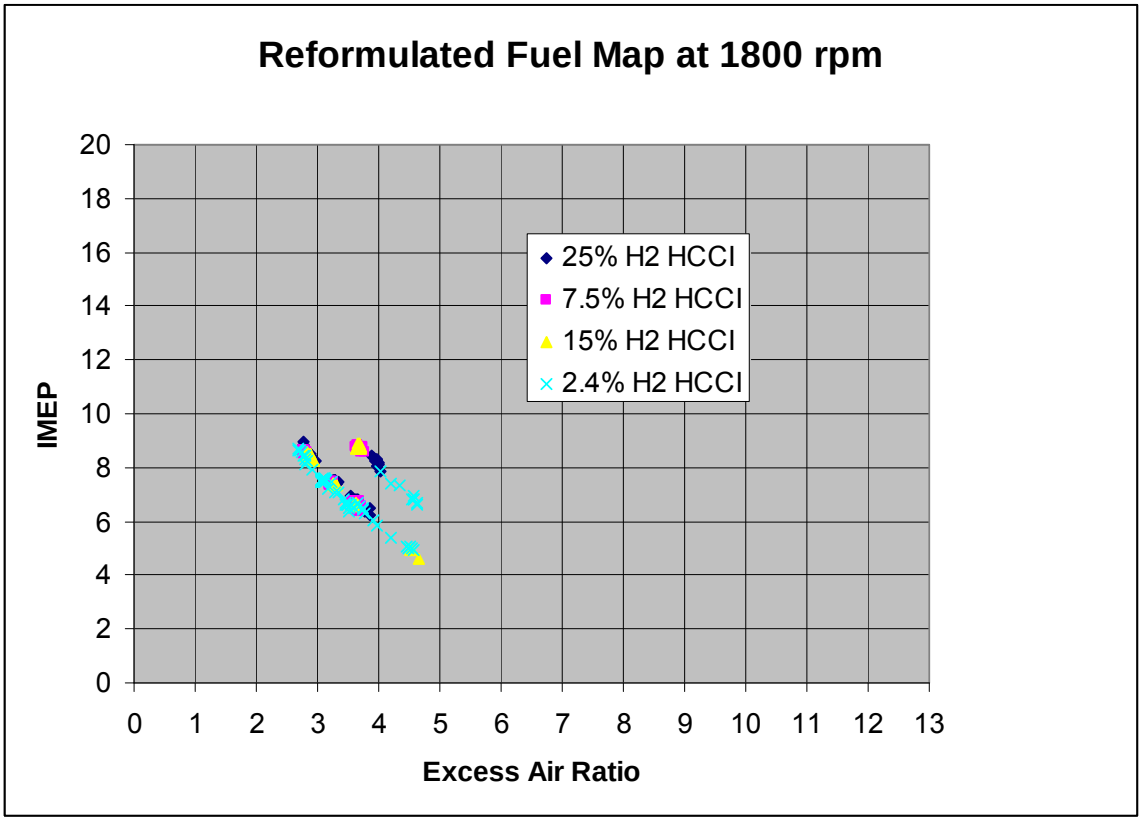

Figure 36. Engine map of test points completed

Source: Gas Technology Institute

5.3. Computer Simulation of HCCI with Reformulated Fuel

Digital-Engines performed HCCI simulations for all of the operating points tested. The objective of these simulations is to test the run conditions before performing the experiment to verify that the experimental setup will not be damaged by exceeding the peak cylinder pressure for the engine. The result shown in **Figure 37** is a repeated simulation with the actual fuel composition measured during the experiments. The present HCCI simulations consider the combustion chamber as a single uniform system and neglect the in-homogeneity of the actual combustion chamber. The effect of this simplification on the results is that the simulated peak cylinder pressure is always higher than the experimentally observed peak cylinder pressure for

the same operating condition. This is acceptable for the intended use of the simulations – to insure safe operation of the laboratory.

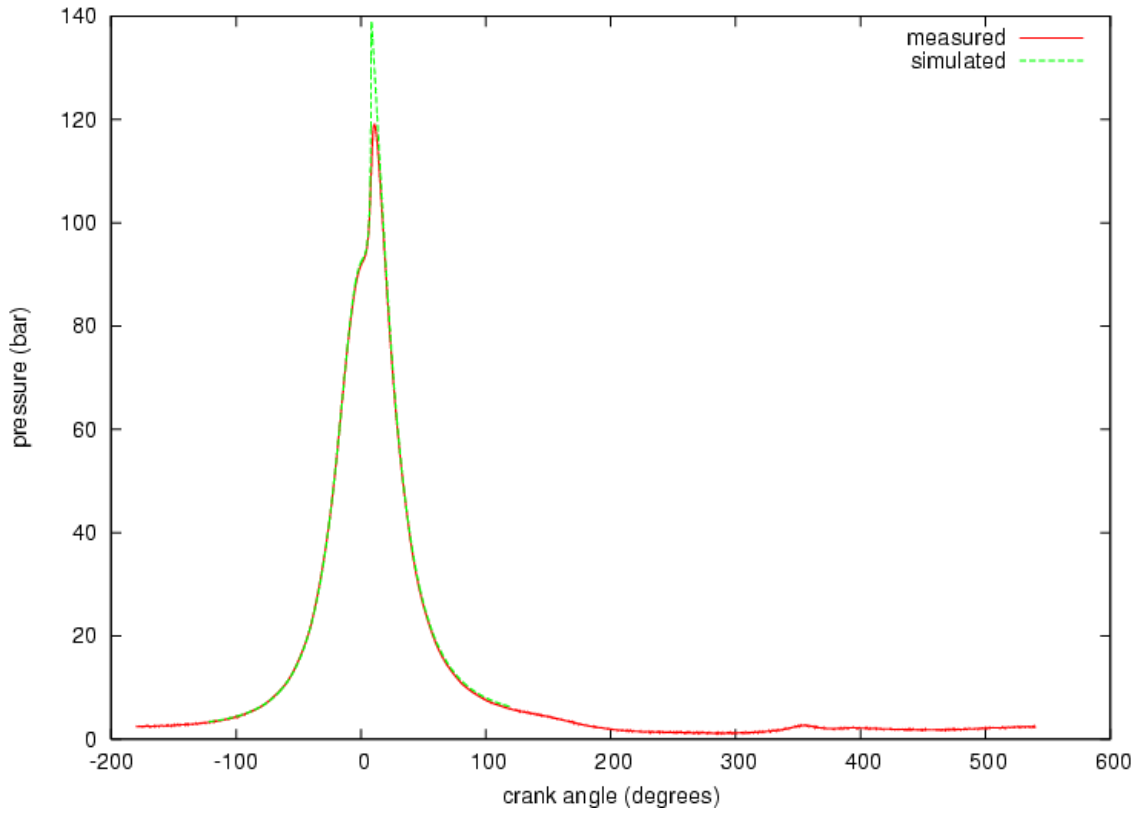

Figure 37. Simulated and the experimental pressure for the last run condition of Table 25
Source: Gas Technology Institute

5.4. Conclusions

The following trends, considering the difficulties encountered producing a steady composition from the TCR, for operating the single-cylinder research engine configured as an HCCI engine were observed:

- Increased hydrogen content reduced the engine's efficiency, typically by one-half of a percent.
- The system efficiency increases through heat recovery via TCR. The largest gains are at the higher hydrogen contents.
- Adding interstitial baseline natural gas testing to the recuperated fuel test procedure avoids uncertainty comparing data.

The flow rate from the TCR would need to increase significantly in order to meet the fuel needs for future stoichiometric, spark ignited combustion. Currently, the maximum capacity of the TCR allows for operation at λ=2.5. The flammability limit of methane is around λ=2.2. The current setup would not allow for operation of the engine with TCR fuel and spark ignition.

6.0 Conclusions and Recommendations

A laboratory scale-up of a recuperative reforming reactor was fabricated and used to measure natural gas conversion and hydrogen yields when thermochemical recuperation was applied for waste heat recovery from natural gas combustion gases at temperatures that simulated exhaust products from lean burn natural gas reciprocating engines. Three different reforming catalysts were evaluated (nickel, rhodium, and Ni-Rh) at carbon to steam ratio of about 2, and the Ni-Rh catalyst provided the highest conversions. The residence times required to achieve different levels of reforming (measured by hydrogen yield) were experimentally determined for use in a design model of recuperative reforming.

A 50 kWe laboratory-scale engine was operated on reformed fuel produced in a thermochemical recuperation laboratory test rig. Testing confirmed the technical feasibility of satisfactory operation of the test engine on reformed fuel produced by TCR. Data obtained from testing confirmed the technical feasibility to use TCR on a reciprocating engine to realize gains in overall system efficiency. The operation of the test engine, configured for homogeneous charge compression ignition, was compared to operation on pipeline-quality natural gas. The limited testing suggests that for the HCCI configuration, the engine brake thermal efficiency on reformed fuel could be comparable to operation on natural gas. While it was not within the scope of the tests to optimize operation on reformed fuel, the engine emissions were measured and compared to natural gas operation. Operation on reformed fuel resulted in lower hydrocarbon emissions compared to the emissions for natural gas operation. Because of the extremely lean combustion associated with HCCI, the baseline NO_x emissions on natural gas were already very low. For the same excess air ratio, in some cases the reformed fuel resulted in slightly higher NO_x. Further optimization between NO_x and CO tradeoff is warranted. Testing also confirmed that the TCR test rig as currently operated would not produce sufficient reformed fuel to enable operation of the test engine in a spark ignition configuration.

A conceptual design of a tubular recuperative reformer for the Cummins QSK19G engine was developed. To prepare the design, the commercially licensed HYSYS code was used to construct a simplified engine model integrated with a process model of TCR. The conceptual design provided an indication of the overall dimensions of the recuperative reformer for the 331 kWe engine.

Based upon the results of described above, it is recommended that development of TCR system for the QSK19G engine be continued with support from Cummins Conclusions and Recommendations.

6.1. Commercialization Potential

Two primary market opportunities are identified at this time: 1) New engines used in power generation applications where emissions limits are California Air Resources Board 2007 requirements for DG; and 2) Existing rich-burn engines used at compressor stations.

6.2. Recommendations

Based upon the results of the work reported in this project, it is recommended that development of a TCR system for reciprocating internal combustion engines continue.

Because of the extensive amount of TCR process modeling performed to date that is based upon the Cummins QSK19 engine configurations (i.e., lean burn and stoichiometric, natural gas and biogas), it would be highly desirable to continue TCR development and demonstration with Cummins.

6.3. Benefits to California

This project addresses the PIER Program goals of enhancing energy efficiency, diversifying electricity supplies by investing in renewable and other clean energy technologies, strengthening California's energy infrastructure to provide for reliability, and continuing California's environmental stewardship. A TCFR system could reasonably result in a 5% reduction in overall system heat rate compared to the currently available engine-generator set. At a 5% reduction in fuel use, and an assumed California market penetration rate of about 50 MW by the fifth year of commercialization, the projected fuel savings at $7 per MM Btu gas are estimated at about $1.1 million per year. Because TCFR produces hydrogen-enriched fuel that has been documented to extend the lean limits of combustion in reciprocating IC engines, the potential exists to use TCR for significant reduction of NOx without exacerbating emissions of CO and unburned hydrocarbons.

Preliminary modeling analyses suggest that TCFR can also be applied to increase efficiency and reduce emissions from engines fueled with biogas at landfills and dairy farms. By reducing NOx emissions, TCFR has potential to help these facilities obtain air quality permits, hence, meeting the goals of the 2011 Bioenergy Action Plan "to increase capture and beneficial use of biomethane currently being flared at waste water treatment plants and landfills"[14]. This supports attainment of Energy Commission PIER Program goal of diversifying electricity supplies by investing in renewable and other clean energy technology.

TCFR may provide a means for continued use of reciprocating IC engines as prime movers for DG in Southern California. The ARB 2007 emission limits for distributed generation could preclude a future market for these systems unless they can demonstrate the capability to cost-effectively meet these limits. Increasing electric power generation efficiency and minimizing the cost of complying with the ARB 2007 emissions limits for DG will contribute to a more cost-competitive California economy.

14 . O'Neill, Garry, John Nuffer. 2011. ***Draft 2011 Bioenergy Action Plan.*** California Energy Commission, Efficiency and Renewables Divison. Publication number: CEC-300-2010-012-SD, p.16.

7.0 Glossary

Acronym	Definition
A/F	Air fuel ratio
ARES	Advanced reciprocating engine system
CO	Carbon monoxide
DG	Distributed generation
EGR	Exhaust gas recirculation
GTI	Gas Technology Institute
HC	Hydrocarbon
HCCI	Homogeneous charge compression ignition
HYSYS®	Process model licensed by Aspen Technology, Inc.
IMEP	Indicated mean effective pressure
λ	Lambda: Excess air ratio (weight air / weight stoichiometric air)
LHV	Lower heating value
NOx	Nitrogen oxides
RICE	Reciprocating internal combustion engines
RR	Recuperative reformer
RRR	Recuperative reformer reactor
S/CR	Steam/carbon ratio
SI	Spark ignition
TC	Thermocouple
TCFR	Thermochemical fuel reforming
TCR	Thermochemical recuperation

Appendix A: Conceptual Design of the Recuperative Reformer for the Cummins 1400 kW QSK60G Engine.

The relevant Cummins QSK60 engine parameters include:

- Electric Power: 1.457MWe
- Exhaust gas temperature (after turbocharger): 553ºC
- Exhaust gas flow rate without TCR: 8703 kg/hr
- Exhaust gas flow rate with TCR: 7720 kg/hr
- Natural gas flow rate without TCR: 286 kg/hr
- Natural gas flow rate with TCR: 254 kg/hr
- Air flow rate without TCR: 8417 kg/hr
- Air flow rate with TCR: 7466 kg/hr

The recuperative reformer parameters considered were:

- Pressure: 103 kPa
- Reforming gas flow rate: 849 kg/hr
- Steam flow rate: 595 kg/hr
- Reforming gas inlet temperature: 245ºC
- Reformed gas temperature (outlet): 416ºC
- Exhaust gas temperature (reformer inlet): 525ºC (taking into account 5% heat losses at exhaust pipe)
- Exhaust gas outlet temperature: 459ºC
- Heat exchange average tube temperature: 404ºC
- Heat losses at the reformer: 5%

Specified targets were:

- Methane conversion rate: 7%
- Hydrogen content (after water removal from reformed fuel): 25%
- Heat of reaction (absorption): 40%
- Reformed gas temperature at equilibrium: 382ºC

Two different concepts for heat exchange tube with catalyst were considered and evaluated. These are depicted in A-1. Calculated parameters of the recuperative reformer for the two catalyst designs are shown in **Table A-2**. Concept A was selected for its low fuel gas-side pressure drop. The resulting overall reformer design is shown in **Figure A-2**.

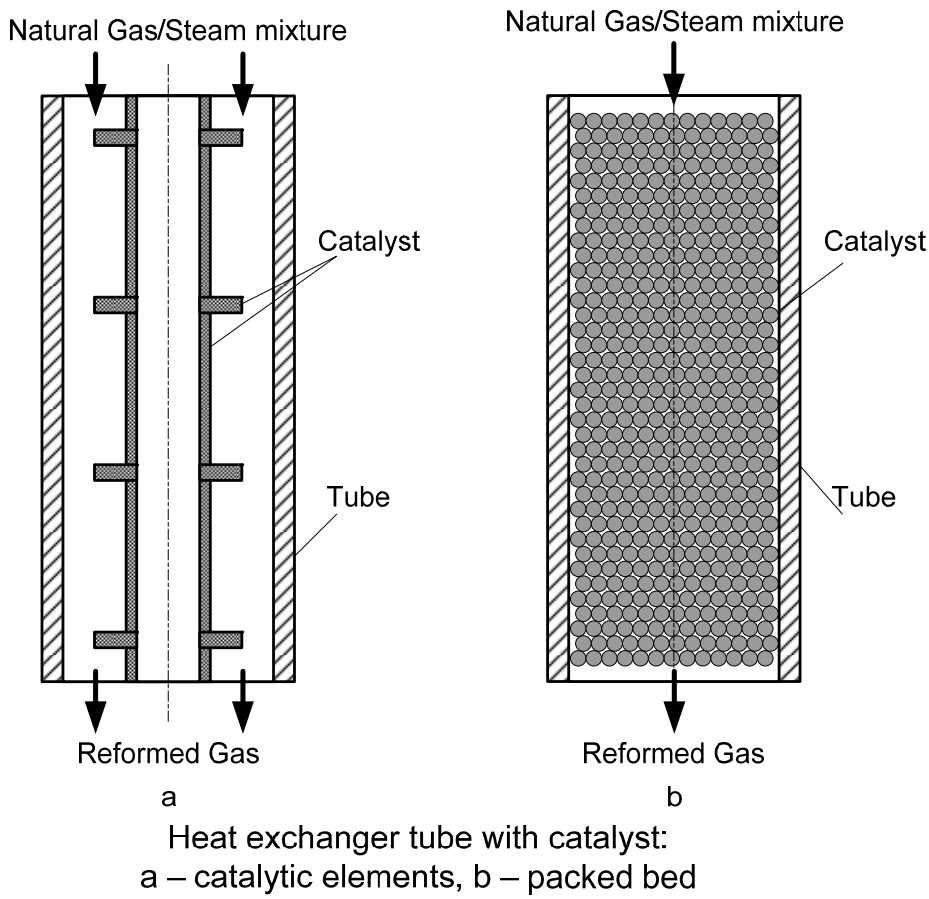

Figure A-1. Alternative reformer tube designs

Source: Gas Technology Institute

Table A-1. Temperature and pressure drops for alternative catalysts

	$(T_{in})_{exhaust}$	$(T_{out})_{exhaust}$	$(T_{in})_{RG}$	$(T_{out})_{RG}$	$dP_{exhaust}$	dP_{RG}
Concept	C	C	C	C	in. WC	in. WC
A. Catalytic elements	525	459	245	416	3	7
B. Packed bed	525	461	245	410	3	3600

Source: Gas Technology Institute

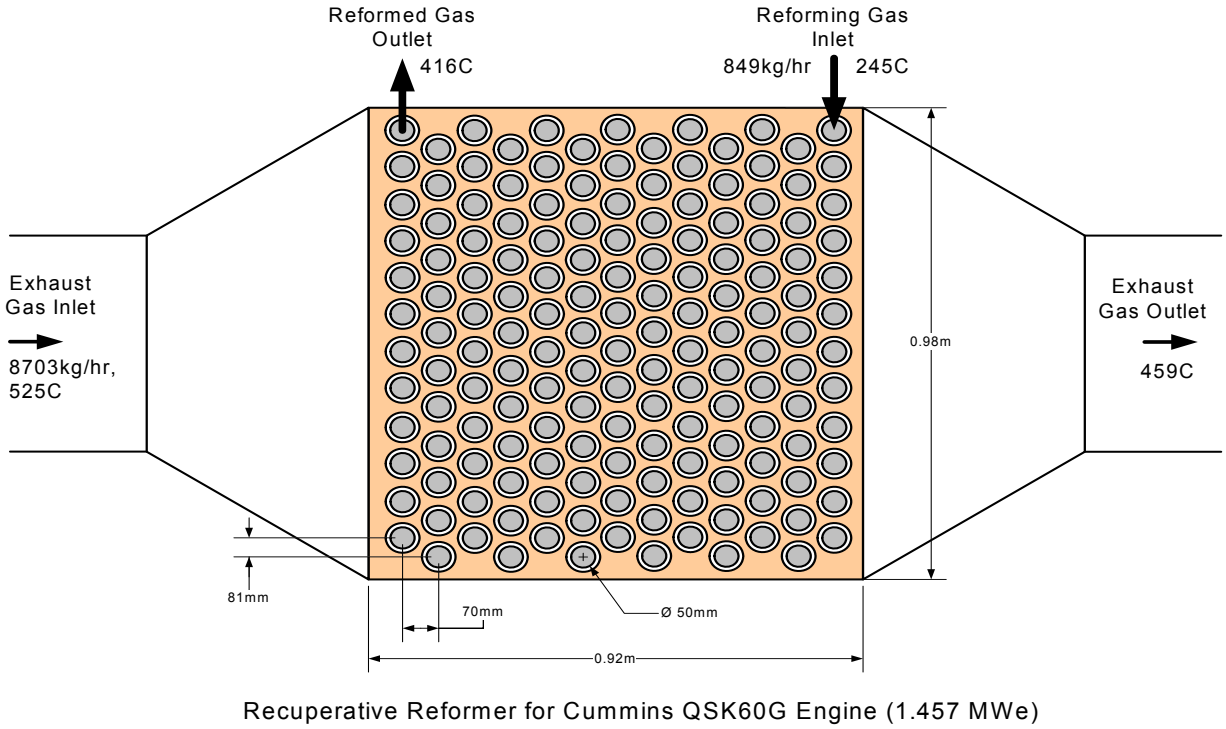

Figure A-2. Recuperative reformer for 60 liter engine

Source: Gas Technology Institute

Heat exchanger dimensions include:

- Tube outside diameter: 50mm
- Tube length: 0.98m
- Number of tubes: 156
- Fin height: 12mm
- Fin thickness: 1.5mm
- Number of fins per meter: 275

Appendix B: Bill of Materials for TCRS RICE-QSK60G

TCR RICE Incremental First Cost										
Cummins QSK60 Installation Bill of Materials										
ID #	Description	Quantity	Raw Material $	Labor - Standard Hours	Labor Classification *	Labor Rate $/hr *	Labor $	Purchased Finished Material $	Total $	Basis of Estimate
1	Frame and skid, TCR subassembly	1	$1,500.00	24.0	Welder/machinist	$76.50	$1,836.00		$3,336.00	Engineering estimate
2	Exhaust subassembly, turbo to TCR	1						$1,200.00	$1,200.00	Engineering estimate
3	Recuperative reformer (RR)	1						$43,063.00	$43,063.00	Quotation from Mirated
4	Exhaust connection, RR to HRSG	1						$300.00	$300.00	Engineering estimate
5	Heat recovery steam generator (HRSG)	1						$4,000.00	$4,000.00	Engineering estimate
6	Exhaust outlet, HRSG							$550.00	$0.00	Engineering estimate
7	Heat exchanger, natural gas/reformate	1						$3,500.00	$3,500.00	Engineering estimate
9	Condenser, reformate	1						$3,500.00	$3,500.00	Engineering estimate
10	Gas manifold, TCR subassembly	1						$1,000.00	$1,000.00	Engineering estimate
11	Water pump, electric motor driven, steam water circuit	1						$1,278.50	$1,278.50	McMaster-Carr Catalog
12	Steam water tank, condensate return	1						$250.00	$250.00	Engineering estimate
13	Auto level controller, steam water tank	1						$1,084.00	$1,084.00	McMaster-Carr Catalog
14	Water pump, electric motor driven, condenser cooling water	1						$1,278.50	$1,278.50	McMaster-Carr Catalog
15	Radiator, condenser cooling water, 2nd section integrated in J/W radiator	1						$4,000.00	$4,000.00	Engineering estimate
16	Expansion tank, condenser cooling water	1						$500.00	$500.00	Engineering estimate
17	Water manifold, condenser cooling water	1						$300.00	$300.00	Engineering estimate
18	Control valve, gas supply	1						$1,100.00	$1,100.00	
19	Flow sensor, gas supply	2						$2,675.00	$5,350.00	Cole-Parmer Catalog p
20	Mixing valve, gas/steam	1						$700.00	$700.00	
21	Control valve, steam	1						$1,200.00	$1,200.00	
22	Flow sensor, steam	1						$1,735.00	$1,735.00	Cole-Parmer Catalog p
23	By-pass valve, natural gas	1						$400.00	$400.00	Engineering estimate
24	Water/steam manifold	1						$600.00	$600.00	Engineering estimate
25	I/O cards and controller modification	1						$800.00	$800.00	Engineering estimate
26	Wiring harness	1						$1,200.00	$1,200.00	Engineering estimate
27	Pressure transducers, intrinsically safe	2						$497.00	$994.00	Transcat catalog page
28	Pressure transducers	1						$287.00	$287.00	Transcat catalog page
29	Temperature sensors	6						$49.00	$294.00	Transcat catalog page
30	TCR assembly & painting	1	$50.00	16.0	Assembler/tester	$63.75	$1,020.00		$1,070.00	Engineering estimate
31	TCR subassembly test	1	$50.00	8.0	Assembler/tester	$63.75	$510.00		$560.00	Engineering estimate
32	TCR system site installation	1	$100.00	32.0	Installer	$51.00	$1,632.00		$1,732.00	Engineering estimate
33	Filtration system, make-up water	1							$0.00	
34	Sulfur removal system, fuel gas, (zinc-oxide)	1							$0.00	
33	Odorant Removal System	1	$2,100.00						$2,100.00	Engineering estimate
34	ORS Adsorbent	1	$3,000.00						$3,000.00	Engineering estimate
Total cost less margin =									$91,712.00	
Margin (@10%) =									$9,171.20	
Total cost plus margin =									**$100,883.20**	

Appendix C: Preliminary Analysis of TCR for Landfill Gas and Biogas Applications

Biogas and Landfill Gas

Because TCR increases the volumetric calorific heating value of the reformed fuel, and because the fuel gas also contains hydrogen, it was hypothesized that the application of TCR to engines using landfill gas or biogas could result in combustion and performance improvements. To predict these changes for the QSK19G engine, a simplified engine performance model developed by GTI within HYSYS was used to calculate changes in system efficiency and engine power with and without TCR.

Representative compositions and heating values for landfill gas and biogas were developed. The HYSYS model was run for the QSK19G engine (calibrated for natural gas) with the biogas composition to calculate estimates of engine efficiency and performance, as well as engine exhaust characteristics.

Modeling of Landfill Gas Engine QSK19G with TCR

Landfill Gas Reforming

Initial composition of Landfill Gas (percent volume):

- 45% CH_4
- 35% CO_2
- 20% N_2

<u>Engine performance model</u>

A simplified engine performance model has been developed to estimate potential improvement of engine efficiency determined by TCR system.

The model allows prediction of engine power output, heat losses in cylinders, and heat losses with exhaust gas for various intake mass flow rates and chemical compositions.

<u>Baseline Engine characteristics without TCR</u>

The performance model was verified for a Lean Burn Engine QSK19G Natural Gas Engine using the Technical Data Set provided by Cummins. These parameters would used to estimate baseline characteristics of the Landfill Gas Engine with and without a TCR system. The calculated baseline Landfill Gas consumption was chosen to produce the same power output value of the Natural Gas Engine at the comparable excess air.

Table C-1. Engine parameters for natural gas and landfill gas engines

Parameters	Technical Data for Natural Gas Engine	Simulation with HYSYS of Landfill Gas Engine	
Power Output, kW:	351	351	
Heat Input, kW:	1023	1030	
Mechanical efficiency, %:	34.4	34.1	
Intake Air Flow, kg/s:	0.547	0.553	
Exhaust Gas Flow, kg/s:	0.569	0.630	
Fuel Consumption, kg/s:	0.0215	0.077	
Excess air, %:	57.5	57.5	
Peak Temperature, ^{0}C		1704	
Peak Pressure, kPa		12,570	
Chemical composition (Mole Fractions):		Air/Fuel mixture	Exhaust
CH_4		0.059	0
CO_2		0.059	0.118
H_2O		0	0.118
CO		0	0
O_2		0.185	0.067
N_2		0.697	0.697
H_2		0	0
Temperature, ^{0}C:			
Before engine (after turbocharger)		50*	
After engine		689	
After turbine	536	486	

* Assumed temperature

Source: Gas Technology Institute

The flow diagram for baseline case is shown in **Figure C-1**. A cooler before the engine has been assumed in all cases considered in this report.

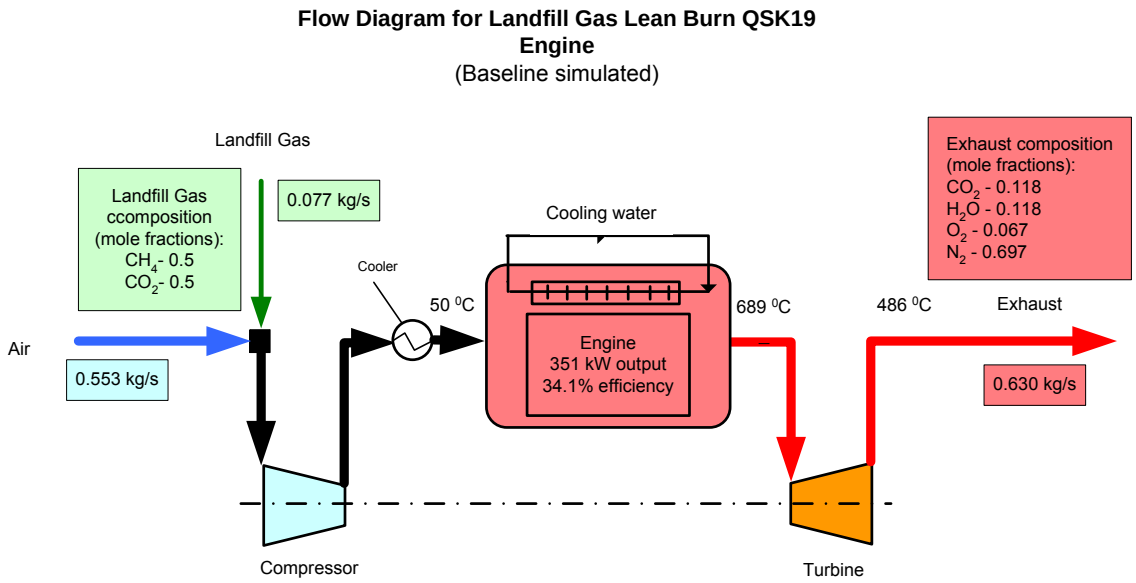

Figure C-1

Figure C-1. Flow diagram for landfill gas lean burn QSK19 engine

Source: Gas Technology Institute

The engine heat balance is showed in the table and in the Sankey diagram below.

Table C-2. Heat balance (modeling)

	kW	%
Heat input*	1030	100
Power output	351	34
Heat losses	312	30
Exhaust	366	36

*Percentage of heat input without TCR

Source: Gas Technology Institute

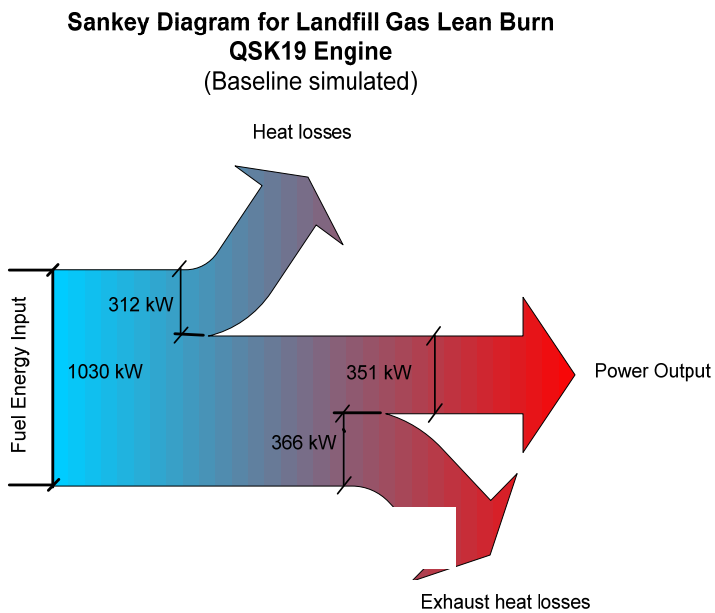

Figure C-2. Sankey diagram for landfill gas lean burn QSK19 engine

Source: Gas Technology Institute

Modeling of Landfill Gas Engine QSK19G with TCR

For reformer located after the turbine, the maximum available fuel reforming temperature has been chosen as calculated exhaust gas temperature after the turbine minus a value of ΔT for heat exchanger of about 50 ^{0}C.

The reformed fuel is assumed to be cooled in heat exchangers (coolers) by cold fuel flow in order to reduce energy consumption by turbocharger.

Heat losses in heat exchangers are assumed to be 5% of heat loads.

Since reformed fuel affects peak in-cylinder temperature, excess air was adjusted to obtain the same (calculated) peak temperature as the engine without TCR.

Table C-3. Parameters of engine and TCR

Excess air:	62.5%
Temperature of Reforming:	430 ^{0}C (806 ^{0}F)

Source: Gas Technology Institute

Fuel Reformer After the Turbine

This case has been run for reformer located after the turbine and reforming temperature of 430^{0}C (approximately 50^{0}C less than the temperature after the turbine). Increased excess air reduces in-cylinder peak temperature to value obtained for baseline engine. Predicted parameters of engine with TCR are showed in **Table C-4**.

Table C-4. Predicted parameters of engine with TCR

Parameters	Values	Increase/decrease relative to baseline, %
Temperature of Reforming:	**430 ^{0}C (806 ^{0}F)**	
Excess air:	62.5%	(+8.7%)
Power Output, kW:	**351**	
Heat Input, kW:	1008	
Mechanical efficiency, %:	34.8	**(+2.1%)**
Intake Air Flow, kg/s:	0.559	
Exhaust Gas Flow, kg/s:	0.634	
Fuel Consumption, kg/s:	0.075	**(-2.6%)**
Peak Temperature, ^{0}C	1703	
Peak Pressure, kPa	12,640	

Source: Gas Technology Institute

Calculated mechanical efficiency increase and fuel consumption decrease correspond to lower heating value relative increase of about 2.1% at assumed reforming temperature, 430°C (see **Figure C-3**).

The flow diagram for the case is shown in **Figure C-3**.

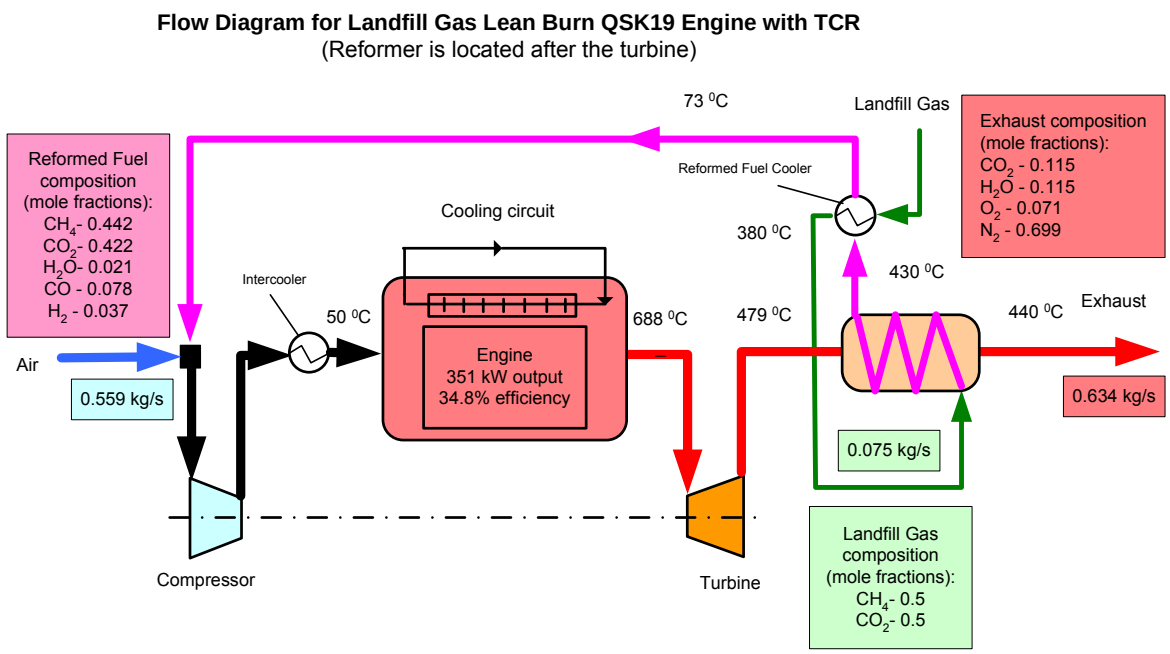

Figure C-3. Flow diagram for landfill gas lean burn QSK19 engine with TCR

Source: Gas Technology Institute

Parameters at characteristic points in system flow diagram are showed in **Table C-5** below.

Table C-5. Predicted parameters at characteristic points in system flow diagram

	Reformed Fuel after Reformer	Reformed Fuel after Cooler	Air/Fuel mixture	Before Engine	Exhaust after Engine	Exhaust after Turbine	Exhaust after Reformer
Temperature, ^{0}C	430	73	28	50	688	479	440
Mass flow rate, kg/s	0.075		0.634				
Mole Fractions:							
CH_4	0.442*		0.054		0		
CO_2	0.422		0.051		0.115		
H_2O	0.021		0.002		0.115		
CO	0.078		0.009		0		
O_2	0		0.185		0.071		
N_2	0		0.695		0.699		
H_2	0.037		0.004		0		

*Methane conversion is 11.4%

Source: Gas Technology Institute

The engine heat balance is showed in **Table C-6**.

Table C-6. Heat balance of engine with TCR (HYSYS modeling)

	kW	%
Heat input	1008	100
Power output	351	35
Heat losses	328	33
Exhaust	329	32
Reversed Heat to Engine from Exhaust	28	2.7*

Source: Gas Technology Institute

Appendix D: Photographs of Reformed Fuel Delivery System Components for HCCI Research Engine Tests

Figure D-1. Fuel compressor with filter

Source: Gas Technology Institute

Figure D-2. Cooler/condenser (black vertical tube)

Source: Gas Technology Institute

Figure D-3. Reformed fuel line (yellow) connection to the engine

Source: Gas Technology Institute

Figure D-4. Natural gas line with flow controller, pressure gauge, and valves

Source: Gas Technology Institute

(a) **(b)**

Figure D-5. Comparison of flames generated by supplemental burner in Figure 3-1 (main report) (a) combusting of neat natural gas and (b) combusting reformed fuel from TCR test rig

Source: Gas Technology Institute

Figure D-6. Absorber tube (in the foreground) for sulfur removal from natural gas supplied to TCR test rig

Source: Gas Technology Institute