Public Interest Energy Research (PIER) Program
FINAL PROJECT REPORT

PROOF OF CONCEPT AND TEST VALIDATION OF A 25 KILOWATT DUAL SHELL STIRLING ENGINE

Prepared for: California Energy Commission
Prepared by: ADI Thermal Power Corp

APRIL 2009
CEC-500-2009-061

Prepared by:

Primary Author(s):
Wayne Bliesner
Principal Investigator

ADI Thermal Power Corp
19495 144th Ave N. E.
Suite A-160
Woodinville, WA 98072

Contract Number: 500-04-017

Prepared for:

California Energy Commission

Arthur J. Soinski, Ph.D.
Contract Manager

Linda Spiegel
Office Manager
Name of Office Goes Here

Laurie ten Hope
Deputy Director
RESEARCH AND DEVELOPMENT DIVISION

Robert P. Oglesby
Executive Director

DISCLAIMER

This report was prepared as the result of work sponsored by the California Energy Commission. It does not necessarily represent the views of the Energy Commission, its employees or the State of California. The Energy Commission, the State of California, its employees, contractors and subcontractors make no warrant, express or implied, and assume no legal liability for the information in this report; nor does any party represent that the uses of this information will not infringe upon privately owned rights. This report has not been approved or disapproved by the California Energy Commission nor has the California Energy Commission passed upon the accuracy or adequacy of the information in this report.

PREFACE

The California Energy Commission's Public Interest Energy Research (PIER) Program supports public interest energy research and development that will help improve the quality of life in California by bringing environmentally safe, affordable, and reliable energy services and products to the marketplace.

The PIER Program conducts public interest research, development, and demonstration (RD&D) projects to benefit California.

The PIER Program strives to conduct the most promising public interest energy research by partnering with RD&D entities, including individuals, businesses, utilities, and public or private research institutions.

PIER funding efforts are focused on the following RD&D program areas:

- Buildings End-Use Energy Efficiency
- Energy Innovations Small Grants
- Energy-Related Environmental Research
- Energy Systems Integration
- Environmentally Preferred Advanced Generation
- Industrial/Agricultural/Water End-Use Energy Efficiency
- Renewable Energy Technologies
- Transportation

Proof of Concept and Test Validation of a 25 kW Dual-shell Stirling Engine final report for the 25kW Dual-shell Stirling Engine Project (Contract Number 500-04-017) conducted by ADI Thermal Power Corp. The information from this project contributes to PIER's Environmentally Preferred Advanced Generation Program.

For more information about the PIER Program, please visit the Energy Commission's website at www.energy.ca.gov/research/ or contact the Energy Commission at 916-327-1551.

ABSTRACT

This program focused on optimizing a 25 kilowatts electrical power (kWe) dual-shell stirling engine. The engine has a unique secondary containment shell that allows heater head operating temperatures up to 2,100 °F, which is 700 °F above current stirling engine heater heads. The temperature increase gives the dual-shell engine both an efficiency increase, from 30 percent up to 45 percent fuel to electric, and a power density increase of 150 percent. The dual-shell configuration uses an exhaust heat exchanger that can be sized independent of the engine heater head. This advantage allows the engine to run with a reduced burner temperature, for low oxides of nitrogen, and a higher heater head temperature giving increased efficiency.

This engine program worked to optimize all of the critical engine components. The main thrust of the research involved designing the two heat exchangers, the exhaust and heater head, so that they could operate continuously at up to 2100 °F while supplying 60 kilowatt thermal (kWth) of heat flux through their respective surfaces to achieve 25 kW engine output. The program successfully integrated all the required engine components and was able to achieve 40 kW of heat flux at 1950 °F. This engine went into testing in December 2008.

California directly benefits from the accelerated deployment of a high-efficiency stirling engine into Combined Heat and Power (CHP) and Combined Cooling and Heating Power (CCHP) applications in the 25 kWe and 100 kWe size ranges. Multiple field test demonstration sites are planned for delivery in 2010 within California. The dual-shell stirling engine with its multi-fuel capabilities, reduced carbon footprint, and extremely quiet operation provides an improved solution for the distributed power needs of California.

When the source of a table, figure or photo is not otherwise credited, it is the work of the author of the report.

Keywords: Stirling engine, distributed generation, electricity production, low NOx burner, heater head, distributed energy resources

TABLE OF CONTENTS

PREFACE i
TABLE OF CONTENTS iii
LIST OF FIGURES iv
Executive Summary 1
Introduction 1
Purpose 1
Project Objectives 1
Project Outcomes 2
Conclusions and Recommendations 3
1.0 Introduction 5
1.1. Background and Overview 5
The Carnot cycle 6
1.2. Relationship to PIER Goals 13
1.3. Goal of the Project 13
1.4. Project Objectives 13
1.6. Task 3: Design and Fabrication of Beta Engine 13
1.7. Task 4: Beta Engine Testing 14
1.8. Task 5: Beta Engine Endurance Assessment 14
2.0 Project Approach 15
3.0 Project Outcomes 19
3.1. Alpha Engine Design and Test 19
3.1.5. 3-D Structural and Thermal Analysis 29
3.1.6. Engine Thermal Transient Design Issues 35
3.1.7. Regenerator Integration 35
3.0. Conclusions and Recommendations 51
Glossary 55

LIST OF FIGURES

Figure 1-shows the beta prime 25 kWe configuration. The engine is shown on a 24 inch by 48 inch test stand and is 65 inches in height. 3
Figure 2-A Carnot cycle acting as a heat engine, illustrated on a temperature-entropy diagram. The cycle takes place between a hot reservoir at temperature T_H and a cold reservoir at temperature T_C. The vertical axis is temperature, the horizontal axis is entropy. 7
Figure 3- A Carnot cycle acting as a heat engine, illustrated on a pressure-volume diagram to illustrate the work done. 7
Figure 4- shows the configuration detail for the dual-shell section 11
Figure 5- shows the inner shell of the Stirling engine which includes the heater head manifold and tubes. 12
Figure 6- side view of complete burner system 19
Figure 7- Burner System in water cooled test stand. 20
Figure 8- three burners used in engine development 21
Figure 9- Burner running on water cooled test 22
Figure 10- Side view of Dual-shell assembly. 23
Figure 11- Rehnium and Chromium coatings on hot seal and TZM 25
Figure 12- Vaccum Oven 26
Figure 13- Phase Diagram for Silver Barium 27
Figure 14- test chamber 28
Figure 15- TZM Conduit with Ribbing 29
Figure 16- TZM Conduit without Ribbing 30
Figure 17- Hollow heater head tube 30
Figure 18- Heater head tube with diffusion bonded internal star 31
Figure 19- Stress Modeling in cooling heater 32
Figure 20- Stress Modeling in cooling silver bath 32
Figure 21- Thermal stress on TZM conduit; radial perspective 33
Figure 22- Thermal stress patterns 33
Figure 23- Thermal stress on Exhaust Heat Changer 34
Figure 24-Regenarator screen wire diameter chart measuring Hfast efficiency. 37
Figure 25-Baseline Alpha Configuration 39
Figure 26- Apha Engine in Stand 40
Figure 27-Shows the Alpha Dual-shell Configuration 41
Figure 28-Beta Engine 44
Figure 29- Beta Dual-shell 45
Figure 30-Beta Prime Configured Engine 48
Figure 31- Beta Prime Configuration details 49

Executive Summary

Introduction

The Stirling heat engine concept was developed almost 200 years ago. Due to its inherent ability to approach the Carnot efficiency, the maximum thermal efficiency possible between two heat sources, much attention has been directed toward this technology. A Stirling engine is a heat engine that converts thermal energy into mechanical energy. This is accomplished by heating and cooling a working gas, typically helium or hydrogen, within a closed cylinder that drives a power piston producing work. The engine cycles the working gas between two chambers where it is heated for the power stroke and cooled for the return stroke on the power piston. A thermal heat sink called a regenerator efficiently stores the bulk of the work gas energy as it cycles between the hot and cold reservoirs.

ADI Thermal Power Corporation, with a total budget of $5 million, has developed a 25 kilowatt electric (kWe) Stirling engine, potentially operating at 43-45 percent efficiency. Through innovative and intelligent implementations, ADI has significantly increased the heater head temperature by 700°F leading to a much greater power density and efficiency. Due to ADI's decoupling of the burner heat exchanger and heater head, the geometry at each location can be optimized for both heat transfer and emissions. ADI also implements a recently developed diamond-graphite coating technology for the piston cylinders leading to a maintenance interval of five years of continuous operation. The dual-shell Stirling engine targets the 25 to 100 kilowatts (kWe) power market. Applications include combined heat and power, fuel cell Stirling engine hybrids, solar, and biomass.

Purpose

The dual-shell Stirling engine offers a significant cost benefit to the distributed power market. The physics of the high temperature components were successfully demonstrated with this program providing the base for continued engine development and testing. Engine efficiency is a key driver in the distributed power market. The dual-shell provides up to 45 percent conversion from fuel to electric.

The engine can integrate with heating and cooling systems to create an extremely efficient combined heat and power system. The engine can also be integrated with Solid oxide and molten carbonate fuel cells to create systems with electrical efficiencies exceeding 60 percent. ADI is targeting the commercial and industrial market segments with both 25 and 100 kWe systems. The "dual-shell" Stirling engine is designed to meet the strict California Air Resources Board's 2007 emission standards for California.

Project Objectives

This program was setup to optimize the engine through a process of design, fabrication, and testing of a series of 25 kilowatt engines. A combination of component testing and

complete system validation was used to optimize critical components within the engine. Development was carried out at ADI Thermal Power which allowed rapid design, system integration, and testing. Integration and testing of the key dual-shell components provided a foundation for optimizing the high temperature features of the dual-shell engine.

Project Outcomes

Three complete systems were designed and fabricated under this contract. Two engine systems were successfully tested. A new control system was successfully integrated through a subcontract with the Gas Technology Institute.

The California Energy Commission program began with an early version of the alpha engine. The primary limitation on the alpha engine, at the start of the program, was the inability to run at sustained input heat flows into the engine above 20 kilowatt thermal of heat flux through the exhaust heat exchanger and into the heater head. It was projected that 60 kilowatt thermal of heat flux would be required to obtain 25 kilowatt of power output from the engine. With this limitation the focus of the program became an evolution of three dual-shell configurations; each integrating lessons learned into the next generation. Power levels and performance continued to increase throughout the program with the following measured and projected levels for the basic engine.

Configuration	Maximum Heat flux	Maximum Comb. Temp	Power Output	Electrical Efficiency
Alpha Engine	20 kWth	3,000 F	5 kWe	25%
Beta Engine	40 kWth	3,000 F	12 kWe	30%
Beta Prime Engine	60 kWth	2,600 F	25 kWe	42%

Note: Beta prime are projected levels, maximum burner temperature reduced for low nitrogen oxides (NOx) capability.

The efficiencies were based on adjusting the air pre heater efficiency to 90 percent and the hot seal cooling ring to 1 kW.

The new beta prime configuration provides a complete system integration of all the critical high temperature dual-shell components. This configuration, based on current test results, allows the dual-shell engine to run at 25 kWe full power conditions while also meeting the low NOx maximum combustion temperature requirements of 2,600 °F.

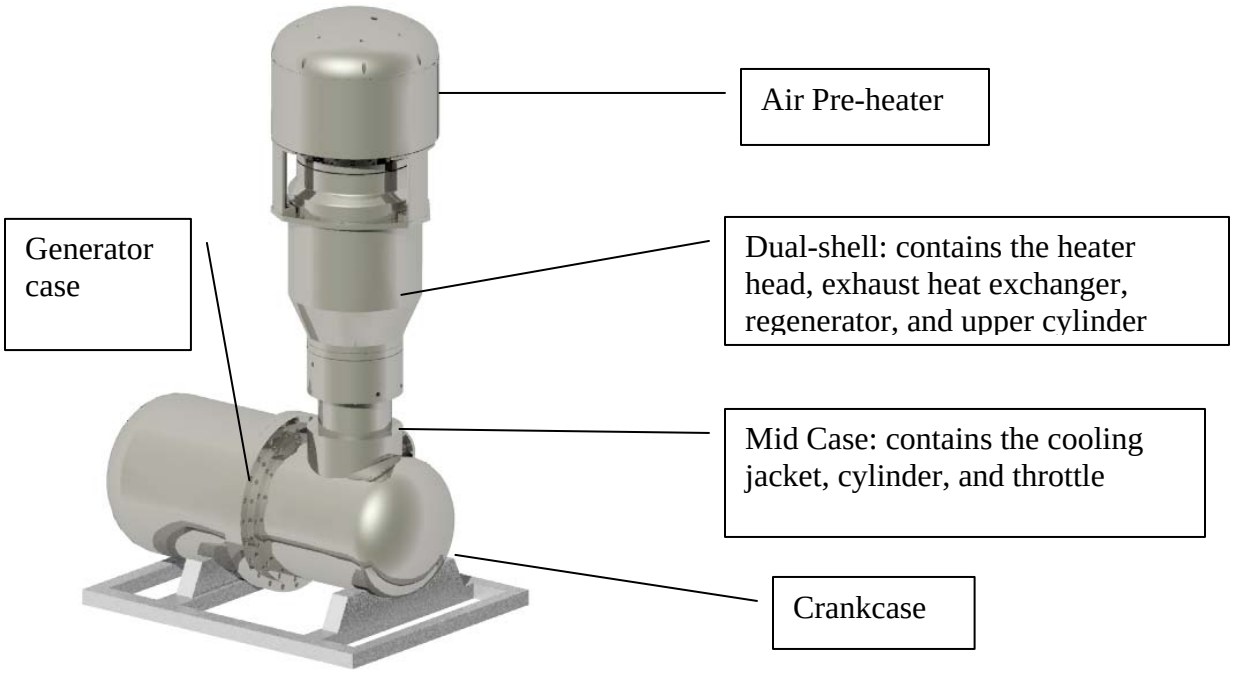

Figure 1 - shows the beta prime 25 kWe configuration. The engine is shown on a 24 inch by 48 inch test stand and is 65 inches in height.
Source: ADI Thermal Power

Conclusions and Recommendations

The program was able to systematically design, fabricate, and test a series of dual-shell stirling engine configurations. The configurations were able to cycle between startup and full operational temperatures without harming the engine. System transients were analyzed in 3-D structural thermal codes to understand the effects of the silver within the engine as it heated and cooled. Engine power levels reached 12 kWe with a heat input measured though the exhaust heat exchanger of 40 kWth. The engine tests indicated that the beta prime configuration will reach 25 kWe with capability to transmit more than 60 kWth through the exhaust heat exchanger.

Several improvements were also developed to successfully integrate into the dual-shell configuration including:

- Low NOx burners
- Kovar structural hot seal on titanium zirconium molybdenum alloy
- New Haynes 230 high temperature alloy
- Mesh screen regenerator

The technical development accomplished during this program provides the documented basis for completing the 25 kWe dual-shell technology. The beta prime configuration was to be tested in 2008 to complete the engine optimization at full power conditions. Endurance testing will be accomplished in 2009 once the engine optimization is

complete. The beta prime engine also provides the test bed for the low NOx burner integration work which will be complete in 2009.

ADI Power Thermal Corporation is very appreciative of the close working relationship with Dr. Arthur Soinski. His patience and guidance in this program helped the program reach 90 percent of its technology development goals. Documented full power and endurance tests will be forwarded to Dr. Soinski as they become available in 2009.

Benefits to California

The ADI dual-shell Stirling engine-generator system is targeted for California's distributed power generation growth market. The California demand forecast for new power is 800 MW/yr in 2009. California is projecting up to 40 percent or 320 MW of this new power will come from new distributed power systems. ADI Thermal Power Corporation is projects a market penetration of approximately 25 percent of the California distributed market mentioned above. A market of this size requires 3,200 25 KWe equivalent units per year. This represents 80 MW of new power systems per year of California's new requirements over the next six or seven years.

This market expansion into the rest of the United States would increase the total addressable market size to approximately 100,000 25 kWe equivalent units per year.

1.0 Introduction

1.1. Background and Overview

The Stirling heat engine concept was developed almost 200 hundred years ago. Due to its inherent ability to approach the Carnot efficiency, the maximum thermal efficiency possible between two heat sources, much attention has been directed towards this technology. Over the past 40 years, companies such as Kockums, General Motors, Ford, and McDonnell Douglas spent hundreds of millions of dollars in an attempt to develop this technology to commercialization. To date, successful designs show low power density, high emissions, low durability, poor load following, and/or high cost per kilowatt. Significant problems originated with heater head temperature limitations, exotic materials, hydrogen embrittlement, power piston seal failure, complex designs, and heat leaks out of the system.

The Stirling engine is in concept a very simple reciprocating engine that was invented before commercially important engines invented by Otto and Diesel. Much of the simplicity derives from the Stirling engine being an external combustion engine. Heat is applied from outside the cylinder walls which contain two pistons, a regenerator, and a working gas that was originally air, but is now helium or hydrogen because the lower molecular weight gases provide higher engine efficiency than air. The construction and operation of a simple Stirling engine is a fairly common physics or engineering student project.

The operation of a Stirling engine approximates the Carnot cycle, the thermodynamic cycle for the operation of a heat engine operating between a hot temperature and a cold temperature. The efficiency is given by:

Efficiency = $1-T_c/T_h$

Where T_c is the temperature of the cold reservoir and T_h is the temperature of the hot reservoir. For the highest efficiency, the fraction should be small, implying a high temperature for the heat source and a low temperature for the cold reservoir.

The **Carnot cycle** is a particular thermodynamic cycle, modeled on the hypothetical Carnot heat engine, proposed by Nicolas Léonard Sadi Carnot in 1824 and expanded upon by Benoit Paul Émile Clapeyron in the 1830s and 40s.

Every thermodynamic system exists in a particular state. A thermodynamic cycle occurs when a system is taken through a series of different states, and finally returned to its initial state. In the process of going through this cycle, the system may perform work on its surroundings, thereby acting as a heat engine.

A heat engine acts by transferring energy from a warm region to a cool region of space and, in the process, converting some of that energy to mechanical work. The Carnot cycle is the most efficient cycle possible for converting a given amount of thermal energy into work.

The Carnot cycle

The **Carnot cycle** when acting as a heat engine consists of the following steps:

- **Reversible isothermal expansion of the gas at the "hot" temperature, T_H (isothermal heat addition).** During this step (A to B on Figure 2, 1 to 2 in Figure 3) the expanding gas causes the piston to do work on the surroundings. The gas expansion is propelled by absorption of quantity Q_1 of heat from the high temperature reservoir.
- **Isentropic (Reversible adiabatic) expansion of the gas.** For this step (B to C on Figure 2, 2 to 3 in Figure 3) we assume the piston and cylinder are thermally insulated, so that no heat is gained or lost. The gas continues to expand, doing work on the surroundings. The gas expansion causes it to cool to the "cold" temperature, T_C.
- **Reversible isothermal compression of the gas at the "cold" temperature, T_C. (isothermal heat rejection)** (C to D on Figure 2, 3 to 4 on Figure 3) Now the surroundings do work on the gas, causing quantity Q_2 of heat to flow out of the gas to the low temperature reservoir.
- **Isentropic compression of the gas.** (D to A on Figure 2, 4 to 1 in Figure 3) Once again, we assume the piston and cylinder are thermally insulated. During this step, the surroundings do work on the gas, compressing it and causing the temperature to rise to T_H. At this point, the gas is in the same state as at the start of step 1.

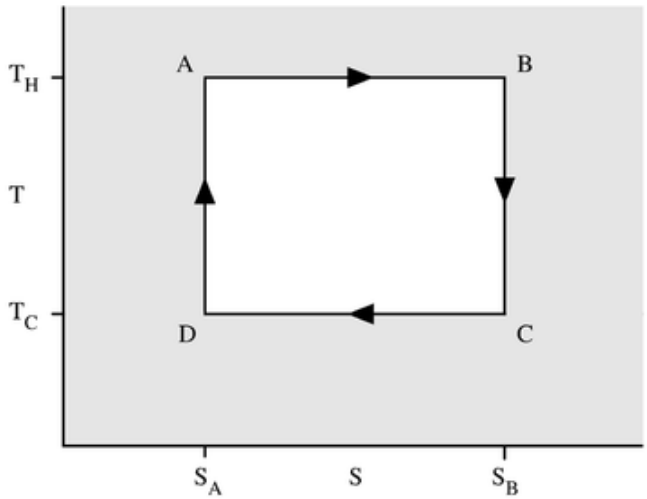

Figure 2 - A Carnot cycle acting as a heat engine, illustrated on a temperature-entropy diagram. The cycle takes place between a hot reservoir at temperature T_H and a cold reservoir at temperature T_C. The vertical axis is temperature, the horizontal axis is entropy.
Source Wikipedia: Carnot Cycle

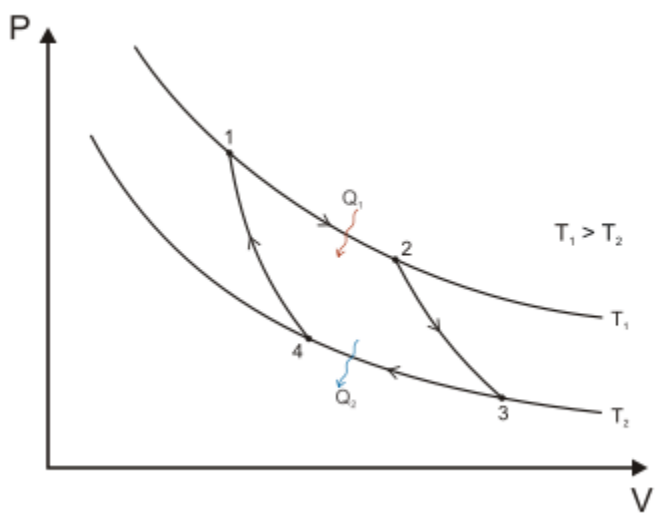

Figure 3 - A Carnot cycle acting as a heat engine, illustrated on a pressure-volume diagram to illustrate the work done.
Source Wikipedia: Carnot Cycle

The strength of metals and alloys is one upper limit on Th. Another limit is the heat transfer capability of the cylinder walls. As with Diesel and Otto engine cycles, the engine exhaust temperature is above ambient temperature. Because the working fluid is retained within a closed system, heat transfer capabilities of materials limit the lower end of Tc.

ADI Thermal Power Corporation's implementation of its patented dual-shell concept reduces the thermal and pressure caused stresses in materials used in the high temperature sections of the engine. The transfer of heat from the burner into the working fluid is improved by an increase in the heat transfer surface area through the addition of nodes or cones and the use of liquid silver as a heat transfer medium.

The dual-shell Stirling engine operates with liquid silver as a convective heat transport mechanism in two locations within the engine:

1) The heater head reservoir, which contains the TZM conduit.
2) The TZM reservoir, which contains the exhaust heat exchanger.

The two regions are designed to operate up to 2100 °F.

Burner heat that is not transferred to the working fluid is recovered in the air pre-heater and is transferred into the incoming air prior to entering the combustion chamber.

ADI, with a total budget of $5 million, developed a 25kWe Stirling engine, potentially operating at 43-45% efficiency. ADI addressed all of the critical issues, mentioned above, that previously prevented Stirling engines from becoming a viable Distributed Generation (DG) technology. Through innovative and intelligent implementations, ADI has significantly increased the heater head temperature, by 700°F, leading to a much greater power density and efficiency. Due to ADI's decoupling of the burner heat exchanger and heater head, the geometry at each location can be optimized for both heat transfer and emissions. ADI also implements a recently developed diamond-graphite coating technology for the piston cylinders leading to a maintenance interval of 5 years of continuous operation. ADI has done significant development on reducing the stresses on the engine components and properly situating components that leads to no working fluid losses and thinner less exotic materials allowing significant reductions in manufacturing cost. ADI currently shows the greatest potential to bring this technology to market, and with 43-45% fuel to electric efficiency, it has the potential to capture significant DG market share. The dual-shell Stirling engine targets the 25 to 100 kWe power market. Applications include: combined heat and power, fuel cell Stirling engine hybrids, solar, and biomass.

Due to the potential high risk associated with this type of project and the lack of experimental validation of performance estimates above 7 kWe, was determined that early testing needs to be performed with currently operational engine hardware. The Contractor shall first modify and test an existing Stirling engine (hereafter referred to as the ***"alpha engine"***) in order to establish a baseline performance map. The tests will verify 15-20 kWe generation at ~40% conversion efficiency.

After the preceding tests are completed, an additional engine (hereafter referred to as the ***"beta engine"***) – incorporating improvements of sufficient maturity to be field tested as described in the Scope of Work – will be designed, fabricated and tested in both the laboratory and in the field. The beta engine will have a durability potential that includes approximately 24 hours of continuous operation at the 15-20 kWe generation level.

1.1.1. What is the Advantage of the Dual-Shell?

The dual-shell concept is a unique approach to improving stirling engines. The dual-shell allows the engine to run at higher temperatures. Higher operating temperatures result in higher engine efficiency or less fuel for a given amount of power from the engine. The higher the temperature, the higher the efficiency. All types of engines tend to run at their maximum operating temperature so that they are operating on as little fuel as possible. For gas turbines, this is limited by the turbine blade temperature. For stirling engines it is the heater head temperature. Stirling engines provide the maximum efficiency for a given temperature difference between the hot and cold gas temperatures.

For normal engines, the heater head tubes are subject to the high pressure within the engine, which for typical stirling engines is over 1,000 pounds per square inch pressure. The high pressure is required to provide the force, which pushes on the power piston giving the engine its power output. For a compression ratio of 2.0, the gas would vary between 1,000 psi and 2,000 psi inside the heater head.

In order to transmit the required input heat into the engine, to heat the working gas, the heater head tubes must operate at a high temperature also.

Metals which are subject to both high temperature and pressure exhibit a phenomenon called creep. This is where the tubing slowly stretches over time. Eventually, a tube would burst if the total creep was too large. To allow the Stirling engine to run for years, the creep is kept very small. For a Stirling engine to have power, it must have high pressure and to achieve high efficiency, it must have high temperature. For a practical Stirling engines the pressure must be high therefore the maximum temperature is restricted to keep the creep low. Typical maximum values of 1400°F are used in "state of the art" Stirling engines. This has limited existing Stirling engines to an efficiency of approximately 30%.

The dual-shell design separates the pressure and temperature variables into two shells. The outer shell operates at high pressure, but low temperature. The inner shell operates at high temperature and zero pressure. The zero pressure is achieved by providing a small pressure orifice between the inner and outer shells above the power piston. The small pressure orifice allows the outer shell to always operate at the average pressure within the inner shell. So for the dual-shell example this would be 1,500 psi in the outer shell. One of the unique patented features of the orifice is to continuously adjust

pressure to the average compression ratio no matter how it is varying within the engine. Figure 4 shows a detail of the beta prime dual-shell configuration.

For stainless materials used in the heater head tubing, the maximum usable temperature is approximately 2,100°F. The dual-shell allows a 700°F increase in maximum temperature. The very significant benefit of the increased temperature is to increase the Stirling engine efficiency from 30% to 45%. This results in a dramatic reduction in fuel requirements of 33%.

Since fuel usage is the largest cost of operating an engine, this represents a very dramatic reduction in operating costs and also results in a direct reduction, of 33%, in carbon dioxide emissions.

To form a complete outer shell pressure vessel, for the pressurized zone, a TZM conduit is integrated within the heater head and is sealed to the lid of the dual-shell. The inside of the TZM is open to atmospheric pressure and has the exhaust heat exchanger nested inside its contoured inner surface. A low pressure burner operates within the TZM interior to transmit heat radially outward from the heat source into the heater head. The TZM is chosen because it can operate at both high temperature and high pressure conditions. The TZM does corrode very easily when exposed to air so must be protected by a region of liquid silver. The liquid silver is an excellent conductor of heat and is used to transmit the heat across the walls.

The exhaust heat exchanger provides the second half of the burner and heater head assembly. Since the TZM interface is required to isolate the dual-shell pressure field, indirect heating through the TZM provides a workable solution. The exhaust heat exchanger transmits energy from the exhaust gas through the TZM and into the heater head. Independent optimization of the exhaust heat exchanger and heater head surface area allows both high engine efficiency and a moderate flame temperature, which is required for low NOx.

The inner shell section of the dual-shell consists of the heater head manifold, heater head tubing, and regenerator shell. The assembly bolts directly to the cooling jacket on the engine. The inner shell contains the high pressure helium. The manifold and tubing are used to transmit the burner heat into the helium. Figure 5 shows a detail of the inner shell assembly.

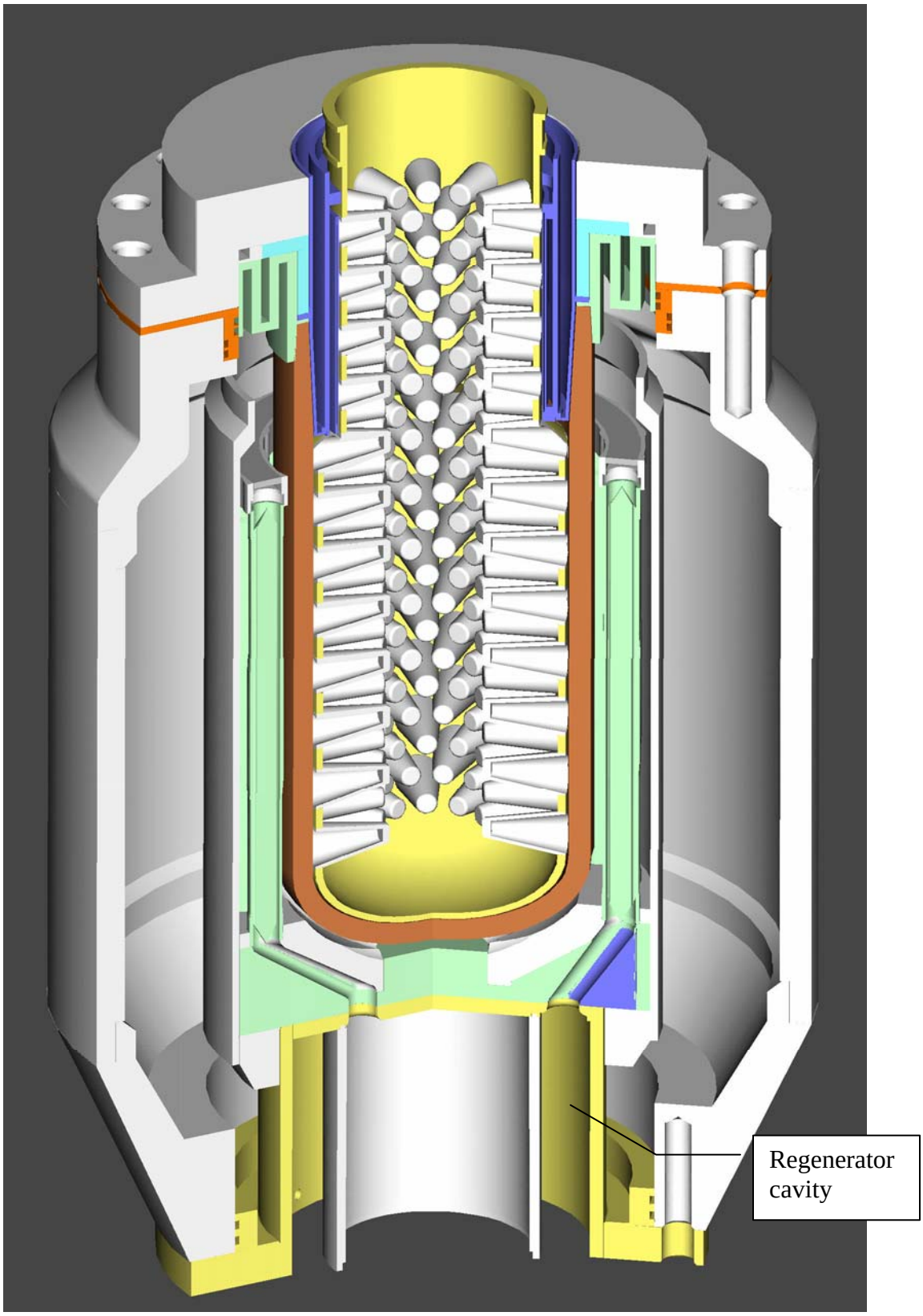

Figure 4 - shows the configuration detail for the dual-shell section.
Source: ADI Thermal Power

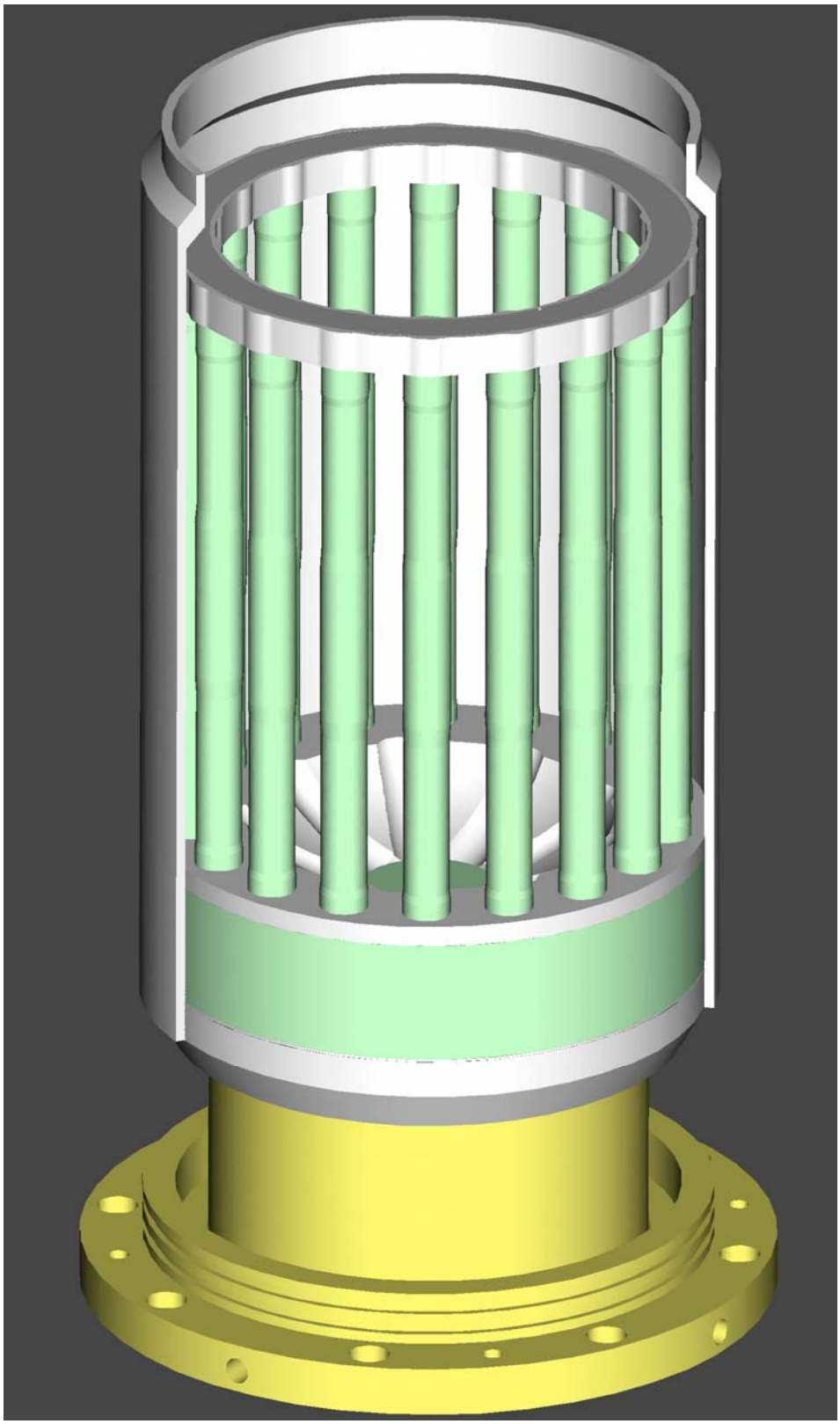

Figure 5 - shows the inner shell of the Stirling engine, which includes the heater head manifold and tubes.
Source: ADI Thermal Power

1.2. Relationship to PIER Goals

This agreement meets the PIER goal of reducing the cost of electricity and increasing the value by providing electricity at lower operation and maintenance cost as well as lower initial cost when compared to current DG equipment. The project will increase the reliability of the electric system by making available a cost effective small generation device that can be located near the usage site and therefore provide grid independent electricity when required. Since this engine has such a high efficiency and burns the fuel continuously and at low pressures and temperatures, the environmental impact of its operation will be lower than other DG equipment. The dual-shell Stirling engine can be powered by many heat sources including solar, prime mover waste heat, furnace exhaust, as well as fired using most fuels, including: digester, biomass, landfill gas, flare gas, diesel, natural gas, propane, kerosene and gasoline, providing additional power to the grid at an economical rate.

1.3. Goal of the Project

The goal of this project is to design, fabricate, and demonstrate test a 25 kWe Stirling engine that significantly surpasses other stirling engines in efficiency and durability.

1.4. Project Objectives

The objectives of this project are to operate the dual-shell Stirling engine at full power and efficiency and to demonstrate the engine's efficiency and durability.

Efficiency:	45% at 25 kWe	Reliability:	100 start and stop cycles
	30% at 12 kWe	Durability:	6,000 hours run time

1.5. Task 2: Alpha Engine Fabrication and Testing

Establish a performance baseline for the alpha engine to demonstrate fuel-to-electricity efficiency approaching 40%. The modifications or improvements include, but are not limited to:

- Improving the TZM hot seal.
- Using hydrogen, rather than helium, as the working fluid.
- Using a 192 node exhaust heat exchanger.
- Automating fuel and air flow control.

1.6. Task 3: Design and Fabrication of Beta Engine

Optimize the alpha engine's burner and heat exchanger systems to allow for peak efficiency from startup to full power levels expected from the beta engine. Obtain 70 kWth burner power level and 60 kWth ($\eta_{\text{heat exchanger}}$ = 85%) heat transfer through the exhaust heat exchanger to the silver medium while at liquid silver temperatures in the heater head, from 1,850°F to 2,100°F. Reduce burner air pumping requirements to

approximately 0.5 kWe. The modifications or improvements include, but are not limited to:

- Perform structural/thermal analyses to determine critical or problem areas that should be addressed in order to achieve long term operation and low maintenance requirements.
- Determine control strategies, optimum heat transfer geometries, acceptable operating temperatures, and Low NOx strategies for the burner components.
- Prepare the Draft Low NOx Strategies Report.
- Develop testing rigs for the burner, burner/air pre-heater, and burner/air pre-heater/exhaust heat exchanger component networks.
- Optimize the operation of the foil regenerator. This optimization shall include, but not be limited to, an analysis on the foil regenerator to determine the foil porosity and dimpling density that optimizes the heat transfer/capacitance, pumping losses, and ease of manufacture.
- Design and fabricate the components necessary for the beta engine to reach the projected full power and efficiency goals. The design of components shall consider material requirements and limitations, structural and thermal requirements, efficiency, manufacturability, cost, durability, and emissions reduction.

1.7. Task 4: Beta Engine Testing

Demonstrate high efficiency, operational flexibility, and capability for unattended operation: Obtain 45% fuel-to-electricity system efficiency, 10-25 kWe output range, 7 days continuous and steady operation, and a minimum-to-maximum power adjustment in approximately 10 seconds. The modifications or improvements include, but are not limited to developing a control strategy for fuel and air flow rate control and shall implement the ported cylinder throttle system to control engine output.

1.8. Task 5: Beta Engine Endurance Assessment

Demonstrate that the beta engine is designed and constructed for durability and long maintenance intervals. Verify that the beta engine can operate at 25 kWe output while meeting required safety values for pressure vessels. Demonstrate a week of continuous operation at 25 kWe output conditions and an accumulated operation time of 9 months at a field location.

2.0 Project Approach

The overall program goal of this contract was to demonstrate a stable dual-shell engine running at 25 kWe power levels at design temperatures. Prior to the start of this program ADI completed a detailed sizing study for the exhaust heat exchanger, which indicated that an area increase of 400% was required to achieve the 25 kWe power requirements while also maintaining burner temperatures acceptable for low NOx California Air Resources Board (ARB) 2007 emission standards. The focused effort for this program was to step through a series of dual-shell configurations, which allowed for the integration of increased surface area exhaust heat exchangers. All of the engine components, not associated with the dual-shell region, were operational and did not require tuning to achieve the engine power level goal. By the end of the program, the exhaust heat exchanger had grown by 391% from the initial alpha to the beta prime configuration.

The dual-shell Stirling engine operates in a temperature region where material properties dominate the performance envelope of the engine. This is due to the fact that the heater head is designed to operate 700°F above existing Stirling engines; up to 2,100°F. The exhaust heat exchanger must operate slightly hotter; up to 2,200°F. In order for the engine to produce power, the two heat exchangers, the heater head and the exhaust heat exchanger, must transmit up to 60 kWth of energy through their surfaces. Tailoring the temperature rise throughout each heat exchanger becomes critical near the maximum temperature boundaries. Integrating a stable burner, which supplies a known quantity of energy to the exhaust heat exchanger also becomes critical as burner power transients directly affect heat exchanger temperatures.

The design strategy for the exhaust heat exchanger was to increase the surface area by node size and through height extensions, which allowed extra nodes. Once a node geometry was chosen and tested, new sizing criteria was available to refine the node shape and spacing. The height limit involved the ability of the silver pump ring to move the energy down to the region where the heater head tubes were located. Several design iterations were carried out with the alpha engine to study these two variations. Once limits were reached, the third variable was integrated, which involved re-designing the heater head to accept a larger diameter exhaust heat exchanger. This was the process which was used from the alpha to the beta configuration. New variations were then carried out on the beta configuration involving node sizing and maximum exhaust heat exchanger height. The last area increase which went from the beta to the beta prime configuration involved a new integration concept, which allowed a further diameter increase at the bottom of the exhaust heat exchanger.

As part of the effort to increase the heat transfer, an alloy study using silver and barium was tested in an effort to lower the liquid silver melting point from 1,760°F to 1,400°F. A

lower operating temperature makes the exhaust heat exchanger more effective. The thermal conductivity of the new alloy was reduced to the point that the alloy benefit disappeared.

While the exhaust heat exchanger and heater head were being tuned, several items were being worked on to improve the design integration.

> A series of three swirl burners were first tested in a water cooled test stand then integrated into the engine. The burners were designed to allow stable rapid mixing of the fuel and air. The water cooled test rig proved very valuable in that it allowed real time burner optimization studies at power levels from 10 kWth to over 70 kWth heat flux.
>
> Improvements in the hot seal, which is attached to the TZM conduit, were completed during this work. Both the hot seal alloy and braze junction were successfully integrated. The material choice was Kovar, which matched the thermal expansion of the TZM up to approximately 1,400°F. A structural gold alloy braze proved a good match for the junction. A fabrication method was devised, which allowed structural brazes to occur at 2,150°F in a vacuum oven. The high braze temperature gave the braze joint a higher strength at the hot seal junction operational temperature of 1,500°F.
>
> 3-D theoretical analysis using a thermal-structural code was used to optimize all the dual-shell components. The analysis provided detailed insight into the thermal effects as the silver cooled from a liquid at 1,760°F to room temperature. An understanding of these transient stresses was critical to integrating all of the components.
>
> The engine regenerator was investigated to understand its performance for both foil and mesh screen. The regenerator is located just outside of the upper cylinder within the dual-shell. Its function is to absorb and re-transmit the thermal energy of the working gas as it cycles between the upper and lower chambers. It is critical to the efficient functioning of the stirling engine. As testing progressed with the alpha and beta dual-shell engine, it was discovered that the foil regenerator was not operating efficiently. Work with NASA gave an understanding of the performance differences between the two regenerators. Fabrication and assembly processes were setup to allow the mesh screen to integrate into the dual-shell engine successfully.

The overall work package for this contract required significantly more dual-shell work that anticipated at the project start. This extra work was primarily due to insufficient 3-D tools to allow for the optimization of the exhaust heat exchanger. Consultation with several industry experts throughout the program indicated that the design required a

significant amount of iterated testing to allow ADI to develop a database of performance parameters. ADI added significantly more matching funds during the program to assist in optimizing the engine and heat exchanger. Based on the extensive test data measuring heat flows at operating temperature, ADI believes the beta prime dual-shell configuration will finally allow operation at the 25 kWe power levels.

Optimization of the engine efficiency needs to be accomplished while the engine is running at full power conditions. Since the majority of the work focused on power optimization the next step of efficiency optimization was only worked as required to understand heat flows within the dual-shell. The final step of endurance testing was also not accomplished as the long lead times to fabricate engine components necessitated engine run times that were typically two to four hours in length so that all effort could be focused on understanding and tuning the hot section of the engine.

3.0 Project Outcomes

3.1. Alpha Engine Design and Test

3.1.1. Burner System Design and Calibration

A Stirling engine requires an external heat source for converting thermal energy to mechanical energy. The ADI dual-shell engines heat source is a continuous flow burner coupled within an air pre-heater, which recovers the exhaust heat and delivers it to the burner inlet air. Inlet air is heated by the exhaust as it flows through the pre-heater and into the combustion nozzle. The burner raises the temperature to between 2,600 °F and 3,000 °F before entering the exhaust heat exchanger. After combustion, the exhaust gas transfers heat into the engine as it traverses the exhaust heat exchanger and exits via the air pre-heater. In order to transfer heat into the Stirling engine, the exhaust gases exiting the exhaust heat exchanger must be above the 2,100 °F heater head temperature. At this temperature 75% of the thermal energy remains in the exhaust gas as it leaves the exhaust heat exchanger and some of this energy can be recovered by the air pre heater. This energy is transferred to the incoming air heating it to approximately 1,900 °F prior to entering the burner. Figure 6 shows a side view of the complete burner system, which consists of the air preheater, burner, nozzle, exhaust heat exchanger, and TZM conduit (a containment and pressure vessel).

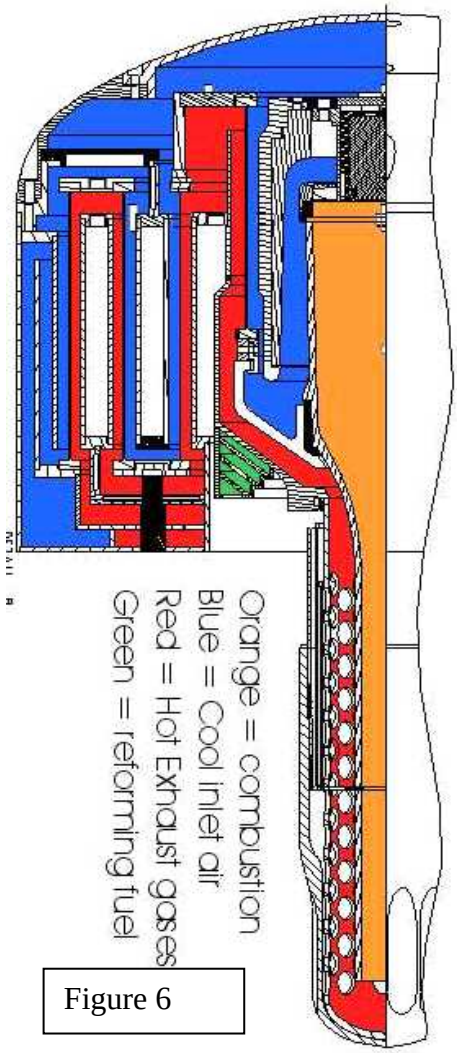

Figure 6 - side view of complete burner system
Source: ADI Power Corp

Quantifying the heat flow from the burner system into the Stirling engine is critical to understanding, and optimizing, the total system. A test stand, (see figure 7), was used to measure real time heat flux thru the burner system by flowing water around the exhaust heat exchanger. The heat output was determined by knowing the water flow rate and temperature rise through the water chamber. The temperature of the exhaust gas

leaving the exhaust heat exchanger was tailored by varying the number of heat exchanger nodes within the exhaust heat exchanger. The alpha engine was designed for 192 nodes in the exhaust heat exchanger. The burner calibration was carried out with zero, 32, and 96 nodes in the exhaust heat exchanger. Measured heat flux at the test temperatures was used to gage heat flux capability at typical engine operating temperatures.

Figure 7 shows the burner system installed in the water cooled test stand. Source ADI Thermal Power.

Figure 7 - Burner System in water cooled test stand.
Source ADI Thermal Power.

The fuel and air supply system for the burner was designed to allow flow rate and mixture control. The air system used a high efficiency scroll pump controlled by a variable frequency 3-phase chopper circuit. The air output was fed directly into the air pre heater. The real time air flow rate was measured upstream of the air pump. This allowed a true air measurement independent of the variable back pressure within the air pre heater due to flow conditions. Fuel flow rate was controlled using a hot wire mass flow meter with automatic control valve. The fuel flow was slaved to the measured air flow rate so that constant fuel/air ratios could be achieved independent of total flow rates. The fuel/air ratio was controlled independently by varying the voltage signal to the fuel flow meter.

The burner manifold was designed using a swirl burner configuration, which allows rapid mixing of the fuel and air prior to combustion. Swirl vanes are used to create a rotating air stream within a constant diameter combustion section of a ceramic nozzle. Fuel ports are located just inside of the air inlet at several locations and are positioned and sized to create multiple fuel jets running parallel to the air flow. The rotating air rapidly entrains the fuel jets and results in a very stable, highly uniform flame geometry. This is beneficial for creating a low NOx mixing zone at the start of combustion.

Burner calibrations were completed for three separate burners; an initial 2 inch burner and two 3 inch burners. The larger burners were fabricated to reduce air pump flow requirements within the engine. All three burners performed with stable operation from idle to full power when integrated with the air preheater. **Figure 8** shows the 3 burners used in the engine development. Calibration data was obtained for both an isolated burner and with an air pre heater.

Figure 8 - three burners used in engine development
Source: ADI thermal Power Corp

Figure 9 shows the 2 inch burner running on the water cooled test stand on propane.

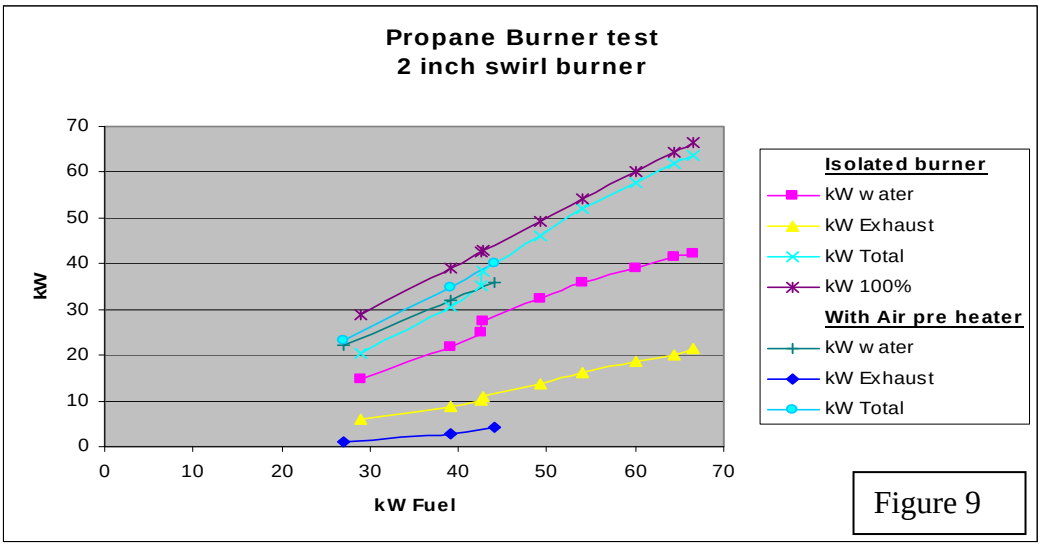

Figure 9 - Burner running on water cooled test
Source ADI Thermal Power

3.1.2. TZM and Hot Seal Integration

The dual-shell design operates with an inner and outer shell. The inner shell contains the engine heater head; the high temperature heat exchanger, which transfers thermal energy to the working gas (typically helium or hydrogen) within the engine. The heater head, on current Stirling engines, is designed to transfer heat into the working gas via direct flame impingement onto the heater head. The dual-shell design uses an exhaust heat exchanger, which operates via direct flame impingement on a matrix of nodes which extend into the exhaust flow. Separating the heater head and exhaust heat exchanger is a TZM conduit, which provides a heat transfer path and also forms a pressure barrier as part of the outer shell.

Figure 10 shows a sectional view of the components described above.

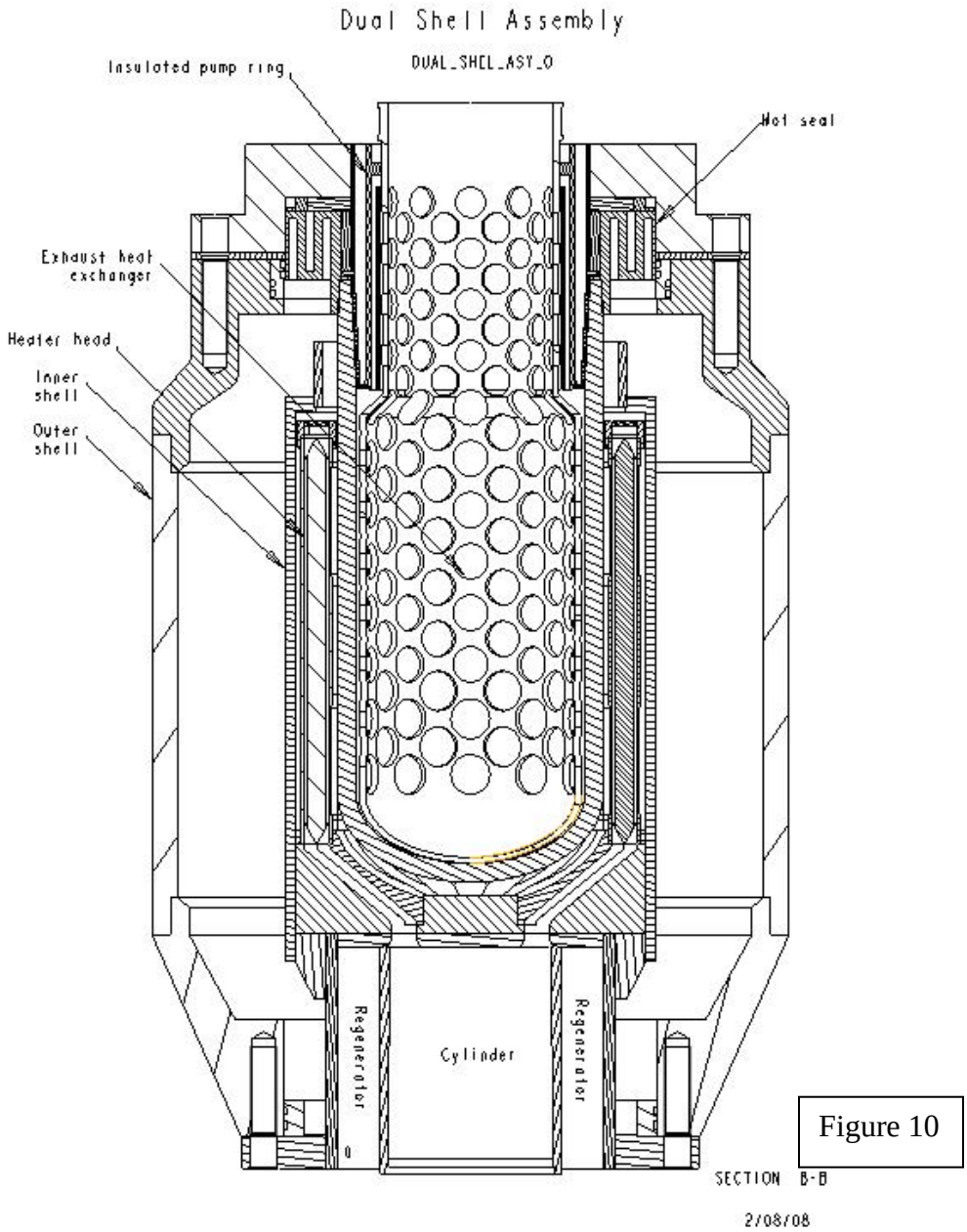

Figure 10

Figure 10 - Side view of Dual-shell assembly.
Source: ADI Thermal Power

TZM is a high temperature structural alloy of titanium, zirconium, and molybdenum. The alloy is primarily molybdenum with a few percent of titanium and zirconium carbides dispersed within the alloy to minimize metal creep at high temperatures. The TZM conduit is a closed end tube that has an annular hot seal brazed to the lip of its open end. The hot seal seals the TZM to the outer shell, capping the outer shell pressure vessel and providing a low thermal conductivity heat path between the TZM and the outer shell. The hot seal is made of Kovar, which has low thermal expansion characteristics similar to those of TZM reducing the stress of thermal shock where the

two materials abut. Thus, the Kovar material choice allows a low stress joint to the TZM that can be brazed to form a structural seal. The TZM and hot seal form an assembly, which floats within a silver bath containing the heater tube manifold. At its outer edge, the Kovar hot seal seals to the outer shell with movable Viton O-rings. This prevents thermal expansion stresses as the inner and outer shells come to equilibrium. As the engine heats up the pressure field, within the outer shell, pushes on the TZM and hot seal causing them to nest in the outer shell lid. On engine cool down, the silver in the heater head solidifies and pulls the TZM and hot seal downward. This freedom of motion avoids thermal expansion stresses between inner and outer shells.

The work during the contract focused on several areas that improved the TZM and hot seal.

1) The TZM is both a structural shell and heat transfer shell. Optimizing the shape is a trade between maximizing strength and minimizing temperature drop thru the TZM wall. One study involved whether vertical ribbing on the TZM between the heater head tubes would increase the strength of the TZM shell. A 3-D analysis between a ribbed design and a smooth design showed a significant improvement with the smooth design. Testing of both shapes within the engine confirmed this result.
2) The alpha and beta dual-shell engines had a stepped TZM shape, which was smaller at the lower half of the TZM shell. The lower region was designed to transfer heat out to the heater head. The beta prime TZM has a straight cylindrical shell design, which increased the heat transfer surface area and lowered the temperature drop thru the TZM wall by increasing the heater head surface area adjacent to the TZM shell.
3) The hot seal design investigated several metals as candidates for compatibility at the TZM braze joint. A zirconium and niobium alloy showed low thermal conductivity and similar thermal expansion characteristics. The alloy was quite strong, but showed a recrystalization phase change during braze processing preventing its use. Pure zirconium was stable thru the phase change. However, the metal showed a strong incompatibility with liquid silver. If the two metals inadvertently touched at high temperatures, they formed a low temperature non-structural alloy. Kovar was selected as an optimum comprise between thermal expansion, thermal conductivity, strength, and chemical compatibility.
4) The brazing compound was researched extensively. High temperature braze studies identified a compatible alloy of nickel, palladium, and gold.
5) Coatings on the hot seal were studied for both oxidation and hydrogen protection. Tests with rhenium and chromium were successfully applied to several seals.
6) An oxidation resistant coating of chromium on the TZM was successfully integrated and tested.

Figure 11 (below) shows rhenium and chromium coatings applied to the hot seal and TZM.

Figure 11 - Rehnium and chromium coatings on hot seal and TZM
Source: ADI Thermal Power

Vacuum Oven Improvements and Vapor Plating Equipment

Several of the components used in the dual-shell Stirling engine work required high temperature processing in vacuum and inert atmospheres. Items that required processing included:

- Vacuum brazing
  - Stainless engine components
  - TZM and hot seal components
- Silver casting
- Engine assembly and disassembly with silver
- Alloy fabrication
- Metal vapor plating

An ADI vacuum oven (see **Figure 12**) was used extensively throughout the program. The oven was required to operate up to 2,200 °F with a processing chamber of 10 inches in diameter and 30 inches in length. Improvements in the oven allowed more consistent processing. The oven was setup to run with a variety of gases including argon, hydrogen, and helium.

Improvements to the oven involved the following items:

- Integration of silicon carbide heating element.
- Fabricating high temperature quick release fittings for the heater rods.
- Fabrication of a working chamber and an insulated outer chamber for the heater rods.
- Fabricating a removable water cooled lid system that was gas tight.
- Integration of a vacuum pump system including valving and pressure measurement equipment.
- Integration of automated gas flow systems.
- Integration of automated power systems and temperature hold systems.

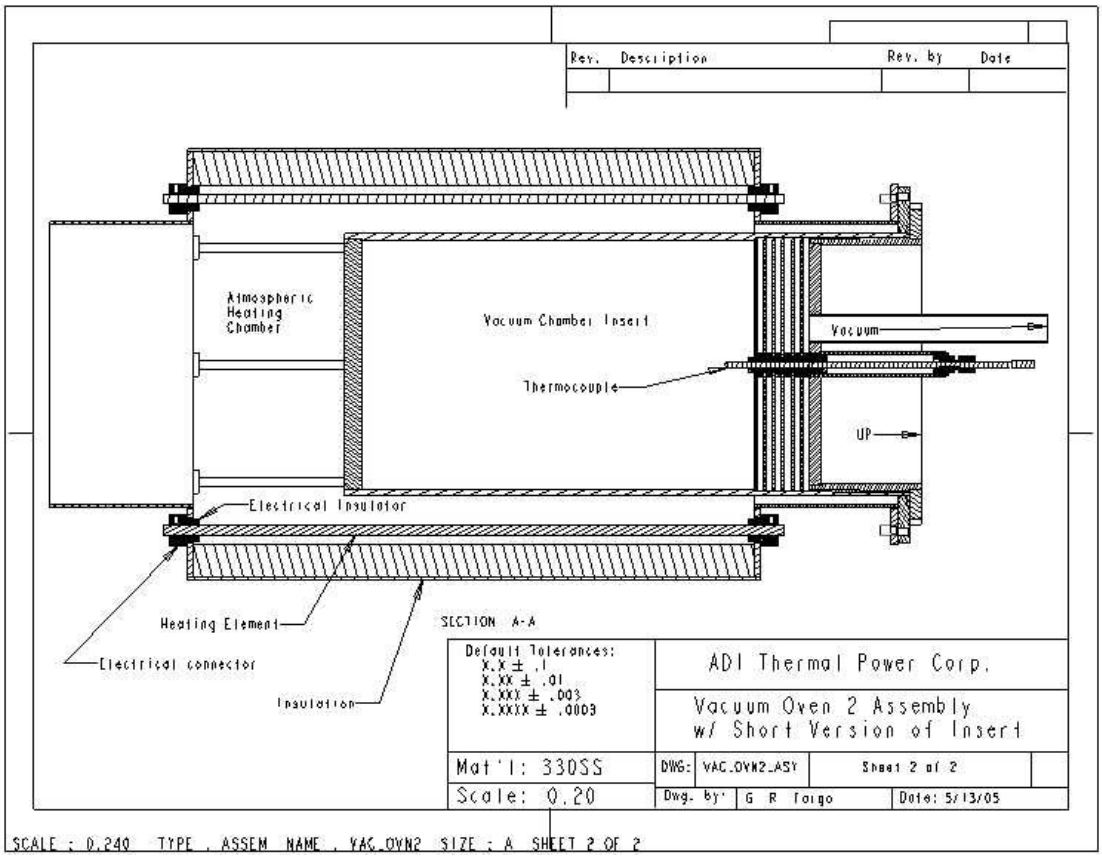

Figure 12 - Vaccum Oven
Source: ADI Thermal Power Corp

One of the processing systems integrated with the vacuum oven was the vapor plating system. Vapor coatings at high temperatures provide corrosion barriers to components that are more adherent than electroplated coatings. Vapor coatings allow a much broader choice of metals to be used in the coating process.

A vapor coating system was fabricated, which consisted of a coating chamber and a metal chloride gas delivery system. The coating technique involves heating a metal

object in a compatible plating environment: either a vacuum, argon, or hydrogen. A small quantity of a metal chloride is vaporized and transported into the plating chamber with hydrogen carrier gas. The metal deposits on the surface of the part, forming hydrogen chloride, which is carried out of the plating chamber.

3.1.3. Liquid Metal Compatibility

Silver melts at 1,760 °F so it is entirely liquid during engine operation. Both the TZM and the stainless materials will contain liquid silver. At operating temperature both metals show a slight solubility in the liquid silver. Sustained operation would require a metal coating to allow full compatibility over a 15 year time period. Both chromium and tantalum coatings provide a zero solubility barrier. chromium was deposited on the TZM successfully using an electroplating process. The tantalum coating was chosen for the stainless steel surfaces. The process involves nickel electroplating followed by a tantalum vapor coating

3.1.4. Silver Barium Alloy Investigation

The use of pure silver as a heat transport fluid allows very compact heat exchangers for the high temperature region of the engine. Our stainless alloys reach a structural limit around 2,100°F, which provides an upper temperature boundary for operating the heater head elements. Experimental alpha engine tests with detail measurements within the liquid silver reservoir of the heater head showed a 100 °F temperature drop between the inner and outer reservoir regions at 40 kWth of input power. The minimum temperature for testing was increased to 1,950°F in order to maintain a liquid silver region and guarantee convective heat transport.

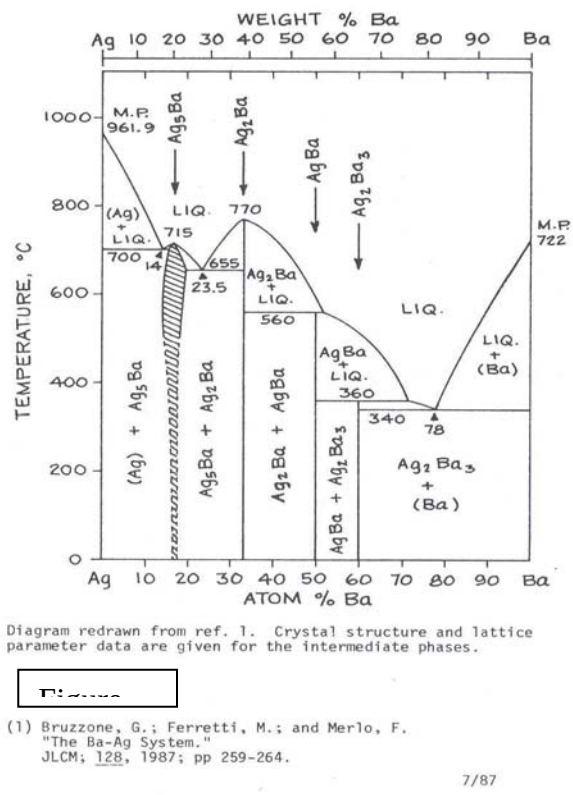

Figure 13 - Phase Diagram for Silver Barium
Source: JLCM, 128, 1987

A study was carried out to investigate liquid metals which

can operate over a wider temperature range than pure silver. Compatibility was studied for corrosion, liquid metal solubility, and operating temperature ranges. An alloy of Silver and Barium was chosen as a candidate material, which was compatible with the existing stainless alloy. The phase diagram for silver barium is shown in **Figure 13**. Source: JLCM, 128, 1987

Two alloys were fabricated and tested for compatibility characteristics; (80% silver-20% barium) and (90% silver-10% barium). A test chamber was designed and fabricated, which allowed corrosion testing of both the stainless and the nickel braze material at 2000 °F operating temperature. The test chamber is shown in **Figure 14** below.

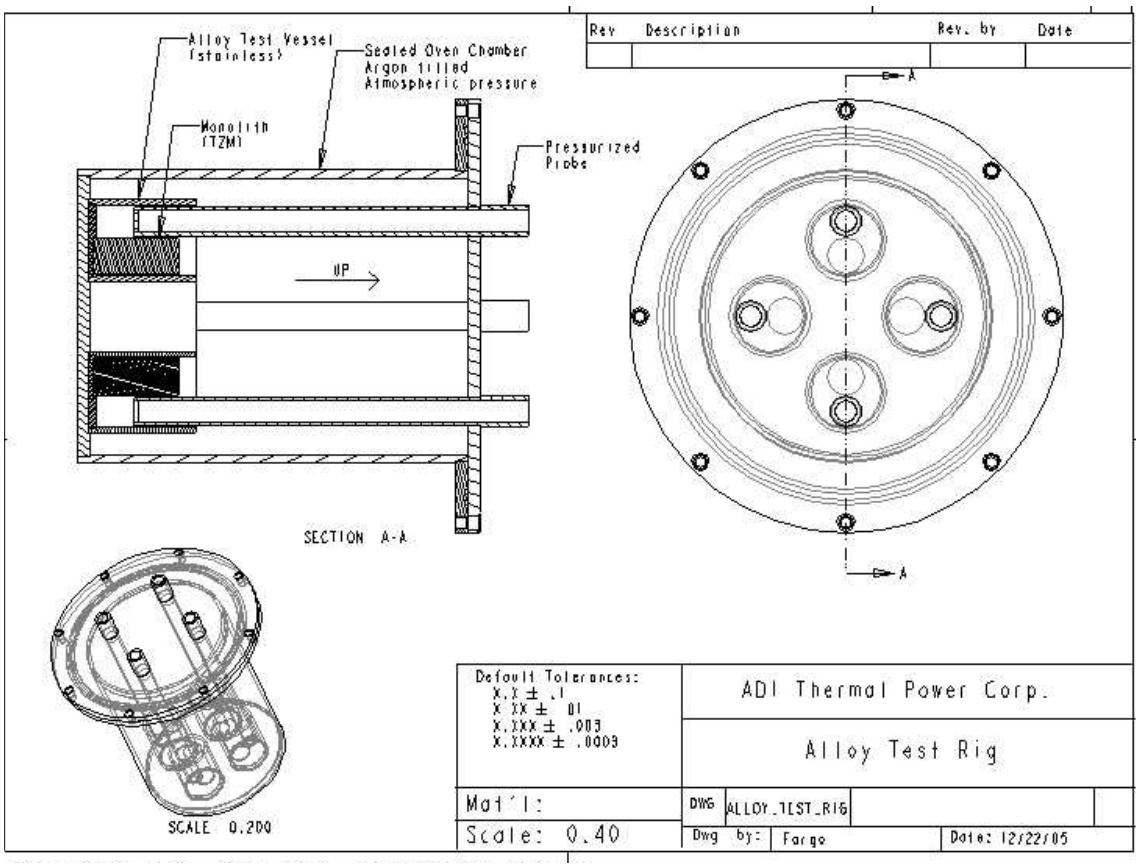

Figure 14 - test chamber
Source: ADI Thermal Power Corp

The chamber allows high temperature testing in an argon atmosphere for extended periods. A water cooled lid allowed for the insertion of pressurized probes through o-ring seals, which were submerged within testing cups at temperature. Tests showed excellent compatibility of the two silver barium alloys. The results of these tests allowed testing of the silver barium alloy within the alpha engine.

Alpha engine testing revealed a 400°F temperature gradient across the heater head using the 90% silver 10% barium alloy with only 20 kWth of heat input into the heater head. Thermal conductivity studies during the testing showed much lower values than

predicted. Because these heat transfer capabilities are insufficient for our engine, it was decided to return to pure silver in the heater head for engine testing.

3.1.5. 3-D Structural and Thermal Analysis

Rose Hulman Ventures conducted 3-D structures and thermal modeling on the critical engine components. A team of five students and a Professor from Rose Hulman University worked the modeling and analysis. ADI provided the detailed geometry. The 3-D analysis provided valuable insight into the alpha engine design and was used extensively as a database for the beta engine improvements.

The TZM conduit was analyzed to understand the effect of re-enforcing ribs that were fabricated for the alpha engine to add to the conduit strength. Experimental tests resulted in vertical cracks between the ribs due to silver induced stresses. A comparison of ribbed verses smooth shapes revealed that the ribbing increased the stress by 70% relative to the non-ribbed case for the same minimum wall thickness.

Figure 15 shows the TZM conduit with ribbing. Note the highest stresses are in the center of the groove where the wall is 0.11 inches thick. The stress in the groove was predicted at 26,110 psi. The highest stress was on the outer contour. Reinforcements actually cause stress risers, which may place the part longevity at risk.

Source: Rose Hulman University

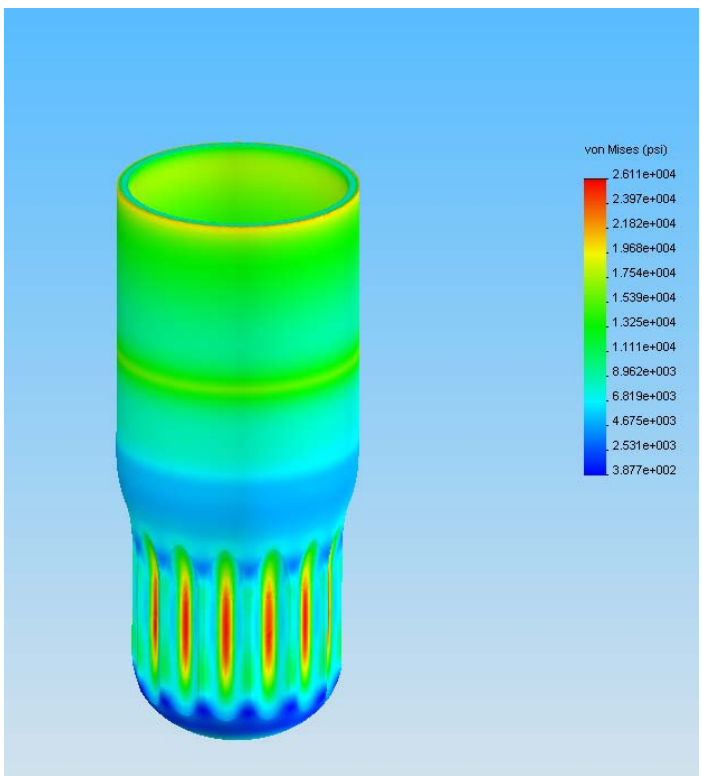

Figure 15 - TZM Conduit with Ribbing
Source: Rose Hulman University

Figure 16 shows the TZM conduit without the ribbing. The lower wall thickness is a constant 0.11 inches. The stress varies from 11,000 psi to 17,000 psi through the wall. This design is superior to the use of ribbed reinforcements Source: Rose Hulman University

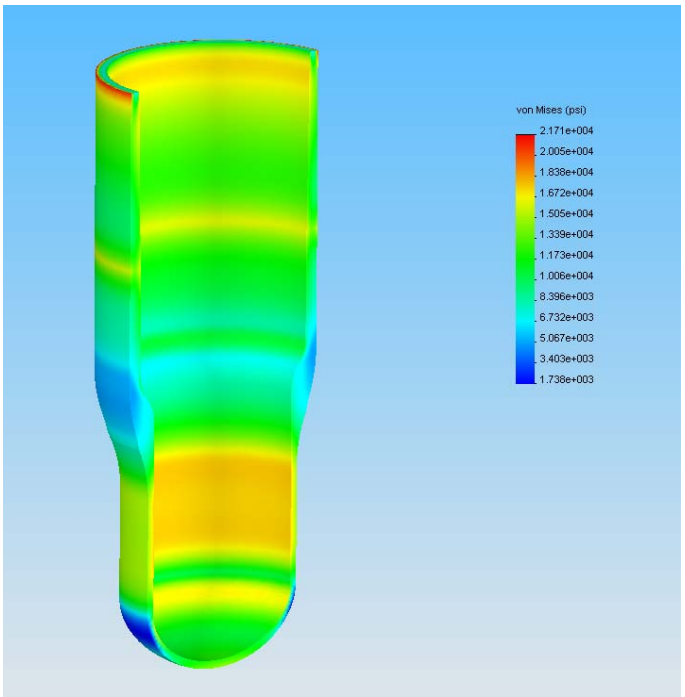

Figure 16 - TZM Conduit without Ribbing
Source Rose Hulman University

A second area of interest was the heater head tubing. The tubing is a diffusion bonded structure, developed at ADI, which joins an internal 8 sided star to the inside of the tube. The configuration results in a more robust heater head with fewer total parts and reduced manufacturing costs. An analysis compared the tube with and without the star welded internally and showed a 44% reduction in wall stresses for the diffusion welding.

Figure 17 shows a hollow heater head tube operating with a 400 psi pressure differential across the tube. The wall stress is approximately 2,500 psi.

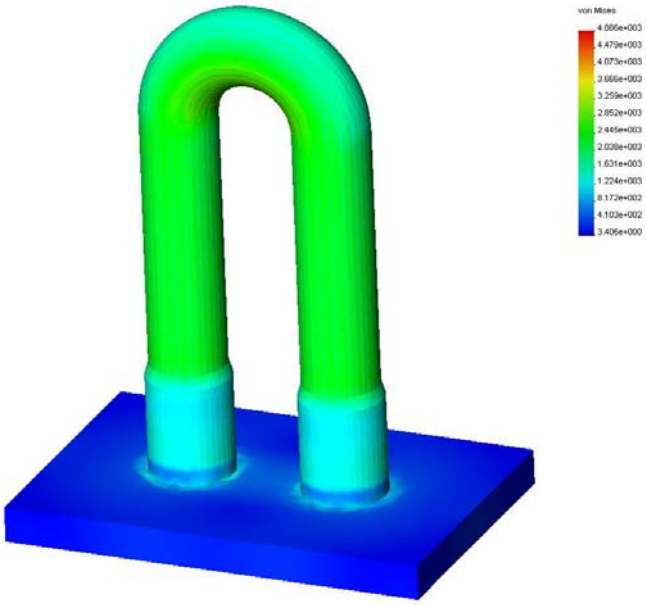

Figure 17 - Hollow heater head tube
Source: Rose Hulman University

Figure 18 shows a heater head tube with the diffusion bonded internal star. The wall stress is approximately 1,400 psi. This is a stress reduction of 44% relative to a hollow version of the same. The value of the star-tube design is proven.

Source: Rose Hulman University

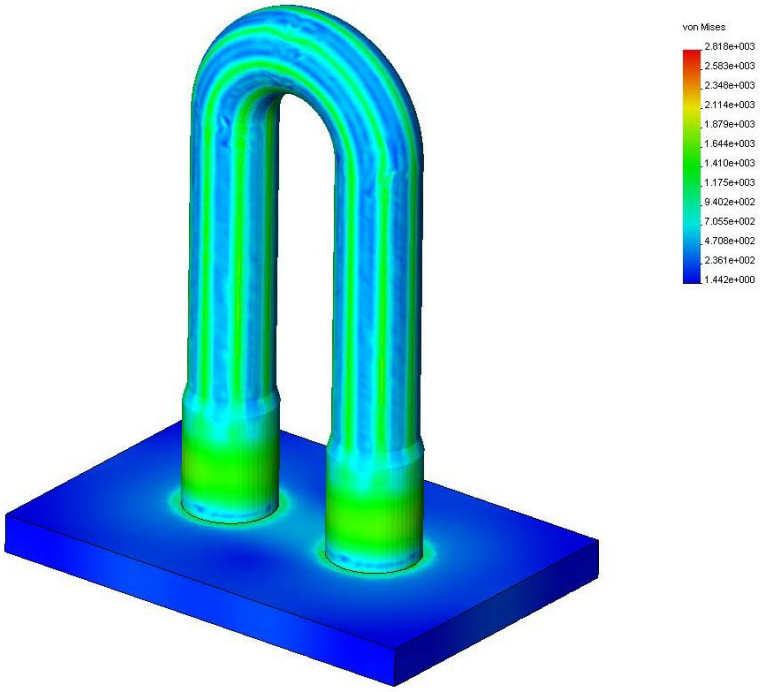

Figure 18 - Heater head tube with diffusion bonded internal star
Source Rose Hulman University

The heater head container shell growth was another area that required detailed analysis. Experimental testing with the alpha engine revealed a slow growth in the inner shell containing the heater head tubes. A 2-D analysis traced this problem to stresses induced when the structure cooled. The inner shell was shrinking faster than the components after the silver solidified. The various components included the TZM conduit, the heater head tubes, the inner shell, and the Silver filler. A 3-D model was setup and modeled with zero stress at 1,760°F when the Silver first solidified. Component stresses were investigated as the assembly cooled to room temperature. The initial results gave load concentrations of 110% for the TZM and 135% for the inner heater head tube structure.

Figure 19: Stress modeling in the cooling heater head silver bath. As the structure cools, the stainless heater head tube pattern imposes a stress pattern on the TZM conduit via the now solid and strengthening silver.

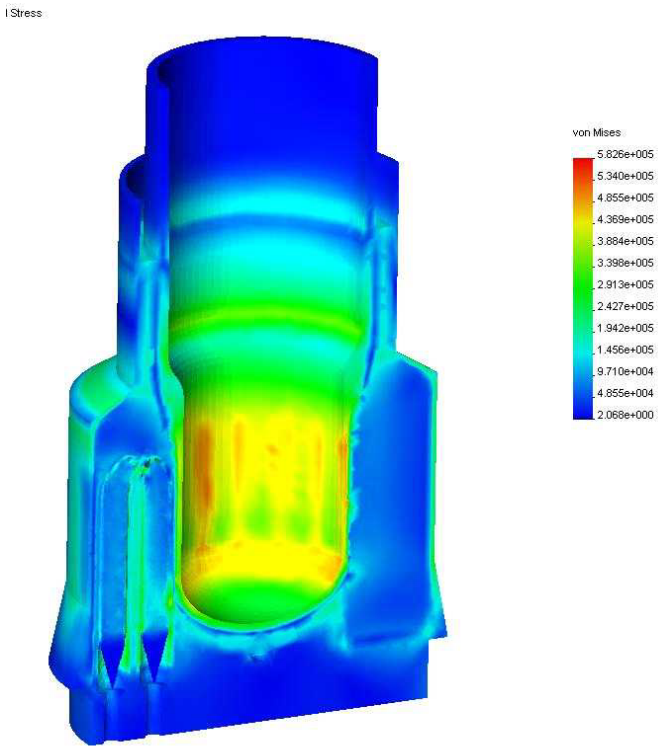

Figure 19 - Stress Modeling in cooling heater
Source: Rose Hulman University

Figure 20: Stress modeling in the cooling heater head silver bath. As the structure cools, the stainless heater head tube pattern imposes a stress pattern on the heater head jacket via the now solid and strengthening silver

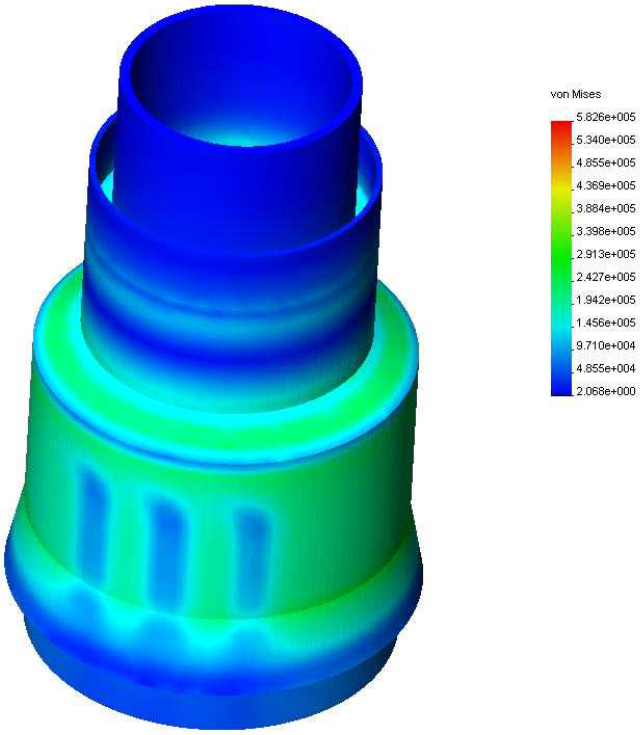

Figure 20 - Stress Modeling in cooling silver bath
Source: Rose Hulman University

Figure 21: Thermal stress pattern on the TZM conduit from a radial perspective.

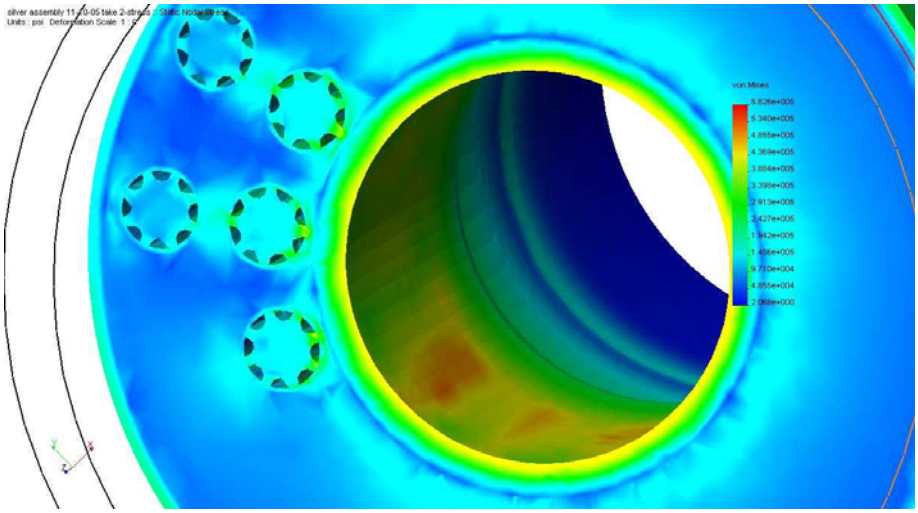

Figure 21 - Thermal stress on TZM conduit; radial perspective
Source: Rose Hulman University

The TZM and Kovar junction was analyzed investigating the cool down effect from 1,900 °F after brazing. The hot sealed reached a yield stress of 16,000 psi on the internal web. The outer web of the Kovar remained elastic indicating that the O-ring surface should remain on dimension after brazing. The analysis also revealed that engine cycling of the TZM and Kovar would remain elastic through engine heat up cycling.

Figure 22: Thermal stress pattern resulting from the Kovar hot seal to TZM conduit high temperature braze after it has cooled to room temperature. A slip fit at braze temperature becomes a press fit at room temperature. Stress levels are acceptable.

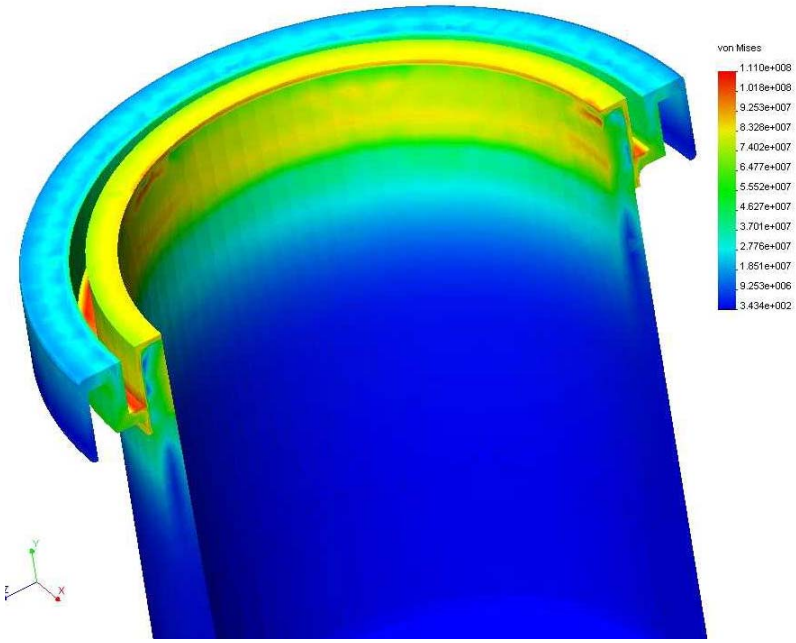

Figure 22 - Thermal stress patterns
Source: Rose Hulman University

The exhaust heat exchanger was modeled during cool down from 1,760 °F to room temperature to investigate stress concentrations. The results indicated that the stress in the node region is twice the silver stress. Also, the stress in the lower ellipse is approximately three times the Silver stress. A comparison of yield strength between the stainless and the Silver is approximately a factor of five. This indicated that the structure should not experience plastic flow on cool down.

Figure 23: Thermal stresses on the exhaust heat exchanger, TZM conduit and insulated pump ring after cooling to room temperature from silver melt temperature.

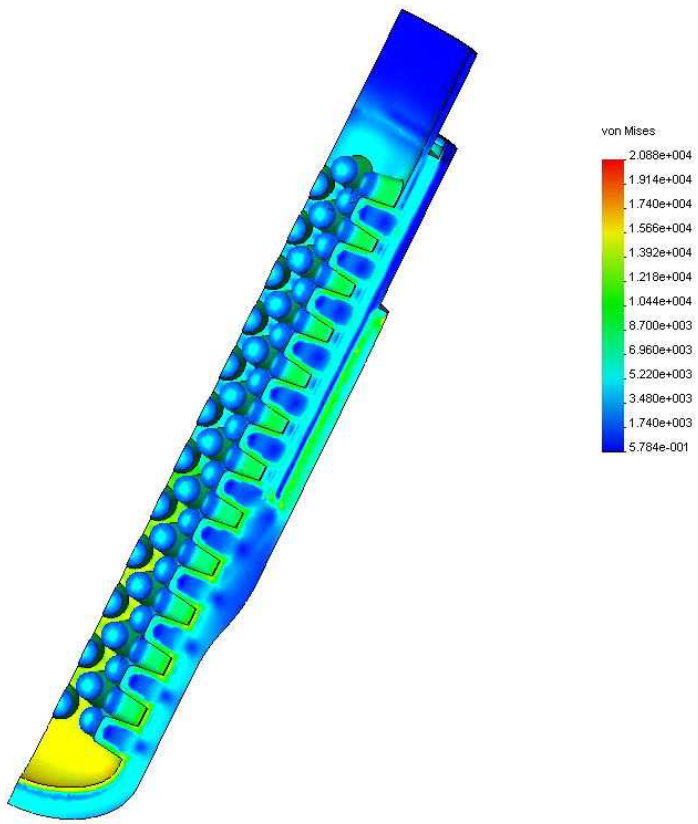

Figure 23 - Thermal stress on Exhaust Heat Changer
Source: Rose Hulman University.

3.1.6. Engine Thermal Transient Design Issues

The 3-D analysis of the alpha heater head assembly was focused on understanding thermal stresses caused by differential expansion of the silver cast within the structure. Figures 20-22 show the stress concentration at the TZM interface and the inside row of heater head tubes due to thermal stresses. The alpha engine heater head shell was found to have grown 0.10 inches in diameter after 50 repetitive cycles from room temperature to liquid Silver temperature. This prompted the detail 3-D heater head studies to determine the cause.

As part of the study on the heater head, a 2-D analysis was completed, which evaluated the heater head components and summed their expansion rate relative to the expansion of the stainless shell, which held all the components. The size of the area mismatch gave an overall assessment as to potential yield stress issues with the heater head shell. The study gave an indication as to amount of vertical silver displacement required to accommodate the lateral area mismatch. The study revealed that the heater head shell grew faster than the sum of the components including the silver. This indicated that the problem condition was during cool down when the container shrank faster than the rate of the summed parts. Pure silver has a very low yield strength and behaves as a visco-elastic material, which slowly flows to relieve stresses. This behavior means that slow cool down rates are beneficial to relieving stresses. The ability of the stainless heater head shell to stretch elastically was a mechanism for the shell to return to its equilibrium diameter after the silver relaxed.

During the design process for the beta heater head, minimizing the 2-D area mismatch was used as a design criteria. Tailoring of beta heater head area resulted in half the area mismatch as the alpha. Repeated cycling of the beta engine revealed a zero growth rate over repetitive thermal cycles.

3.1.7. Regenerator Integration

In a Stirling engine, the regenerator is an internal heat exchanger and temporary heat store placed between the hot and cold spaces such that the working fluid passes through it first in one direction then the other. Its function is to retain within the system that heat which would otherwise be exchanged with the environment at temperatures intermediate to the maximum and minimum cycle temperatures, thus enabling the thermal efficiency of the cycle to approach the limiting Carnot efficiency defined by those maxima and minima.

The primary effect of regeneration in a Stirling engine is to greatly increase the thermal efficiency by “recycling” internally heat that would otherwise pass through the engine irreversibly. As a secondary effect, increased thermal efficiency promises a higher power output from a given set of hot and cold end heat exchangers (since it is these which

usually limit the engine's heat throughput), though, in practice this additional power may not be fully realized as the additional "dead space" (unswept volume), and pumping loss inherent in practical regenerators tends to have the opposite effect.

The regenerator is a mass that is heated and cooled between the heat source and heat sink temperatures as the working fluid moves back and forth. The regenerator, as a working fluid pre-heater, pre-cooler, improves the ability to heat and cool the working fluid. This reduces the burden on the heat source and sink heat exchangers in moving the working fluid to the maximum high and low temperatures.

Designing a successful regenerator is a balance between high heat transfer with low viscous pumping losses and low dead space. These inherent design conflicts are one of many factors that limit the efficiency of practical Stirling engines. A typical design is a stack of fine metal wire meshes, with low porosity to reduce dead space, and with the wire axes perpendicular to the gas flow to reduce conduction in that direction and to maximize convective heat transfer.

The regenerator, in a Stirling engine, is used to store thermal energy as the working gas cycles between the hot and cold chambers within the engine. Regenerators have approximately 300 times the thermal mass of the helium or hydrogen passing through the heat exchanger. A temperature gradient between the hot and cold side of the engine is setup within the regenerator when the Stirling engine first starts operating. The working gas passes through the regenerator and approximately matches the temperature gradient within the length of the matrix. An optimized regenerator is a trade between achieving very high heat transfer and minimizing pumping losses as the gas moves through the matrix.

Guidance in regenerator optimization for the alpha engine was obtained by using the NASA Hfast Stirling engine code. The code provided several variations in regenerator geometries and types which could be analyzed within the engine. Trade studies between mesh screen and foil regenerators were investigated within the code. Based on constant heat transfer requirements the foil showed significant benefits in terms of reduced pressure drop through the matrix. As a result of this optimization foil was chosen for the alpha engine regenerator. Techniques for “dimpling” the foil were integrated into the regenerator to allow a uniform gap between foil layers. The alpha engine regenerator configuration layered 0.002 inch foil with 0.002 inch spacing between layers. It was fabricated by rolling into a tight cylinder and inserting into the engine.

Testing with the alpha engine revealed that the heater head and cooling system were working harder than projected given the engine power output. If the regenerator efficiency is not transferring heat effectively, then the working gas lags the temperature profile within the matrix and ends up too hot on the cool side of the engine and too cool on the hot side of the engine. This makes the heater head and cooling system work

harder to make up the difference. A second effect that was noticed during testing of the alpha engine was a decline in compression ratio as power levels were raised. The effect of reduced compression ratio was traced to overheating of the power piston sealing rings.

Discussions with NASA on regenerator optimization provided additional insight into mesh screen regenerators. It was discovered through experimentation at NASA that mesh screens were providing a higher heat transfer rate than predicted by the Hfast code. Additional forced turbulence factors were increasing the effectiveness of mesh screens, which resulted in them being superior to foil regenerators. Based on this new data, an investigation was carried out on optimizing mesh screens for the beta engine. The curves in Figures 24 below indicate trends in performance verses porosity for a several wire sizes within the mesh.

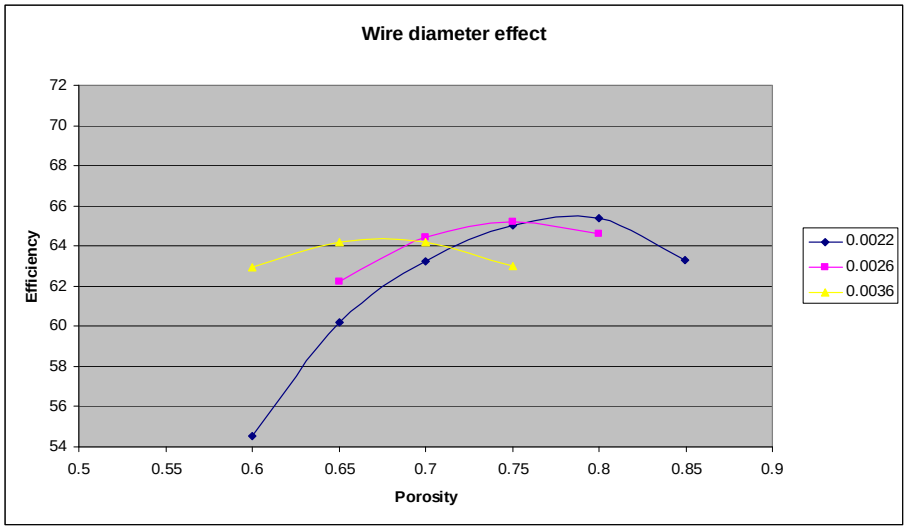

Figure 24 -Regenarator screen wire diameter chart measuring Hfast efficiency.
Souce: ADI Thermal Power

Figure 24a shows Hfast efficiency results of varying regenerator screen wire diameter with porosity.

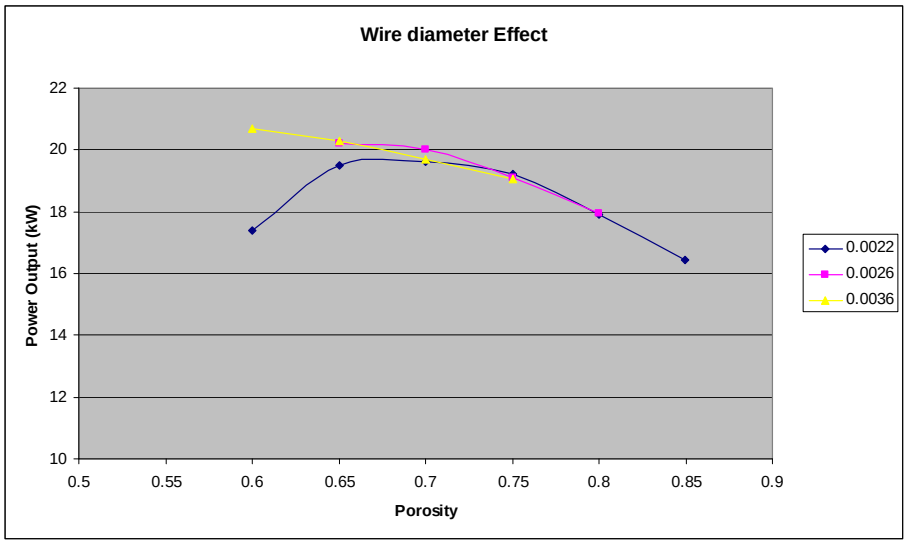

Figure 24B 1 - Hfast power output
Source: ADI Thermal Power

Figure 24b shows Hfast power output results of varying regenerator screen wire diameter with porosity.

A mesh screen regenerator with a porosity of 70% and wire diameter of 0.0036 inches was fabricated and tested in the beta engine. Testing showed improvements in engine power and efficiency. Compression ratio remained constant at the higher power levels, which was a direct result of cooler temperatures above the power piston due to the higher regenerator efficiency.

Basic Dual-shell Engine

The Energy Commission program began with an early version of the alpha engine. A number of components were fully operational on the engine. These included:

- A 3-phase generator integrated into a 16-inch diameter by 36-inch pressure housing.
- A crankcase housing with dual piston crankshaft and linear mechanism.
- A cooling jacket and engine cylinder with low friction piston and liner.
- An alpha dual-shell with heater head and 144 node combustion heat exchanger.
- A four stage air pre heater with reverse flow combustor system.

The primary limitation on the alpha engine, at the start of the Energy Commission program, was the inability to run at sustained input heat flows into the engine above 20 kWth of heat flux through the exhaust heat exchanger and into the heater head. It was projected that 60 kWth of heat flux would be required to obtain 25 kWe of power output from the engine. With this limitation, the focus of the program became an evolution of

three dual-shell configurations, each integrating lessons learned into the next generation. Power levels and performance continued to increase throughout the program with the following measured and projected levels for the basic engine:

Configuration	Maximum Heat flux	Maximum Comb. Temp	Power Output	Electrical Efficiency
Alpha Engine	20 kWth	3,000 F	5 kWe	25%
Beta Engine	40 kWth	3,000 F	12 kWe	30%
Beta Prime Engine	60 kWth	2,600 F	25 kWe	42%

Note: Beta prime are projected levels, maximum burner temperature reduced for low NOx capability
The efficiencies were based on adjusting the air preheater efficiency to 90% and the hot seal cooling ring to 1 kWe.

Figure 25 - Baseline Alpha Configuration
Source: ADI Thermal Power Corp

Alpha Configuration

The work on the alpha engine focused on the burner, exhaust heat exchanger, hot seal, dual-shell, and control system. Improvements to the alpha engine included:

- Brazed hot seal to TZM
- Kovar used in hot seal
- Increased exhaust heat exchanger surface area by 133%
- Improved U-shaped heater head tubes
- Integration of swirl burner and control system
- Improved TZM conduit shape

Figure 26 - Apha Engine in Stand
Source: ADI Thermal Power

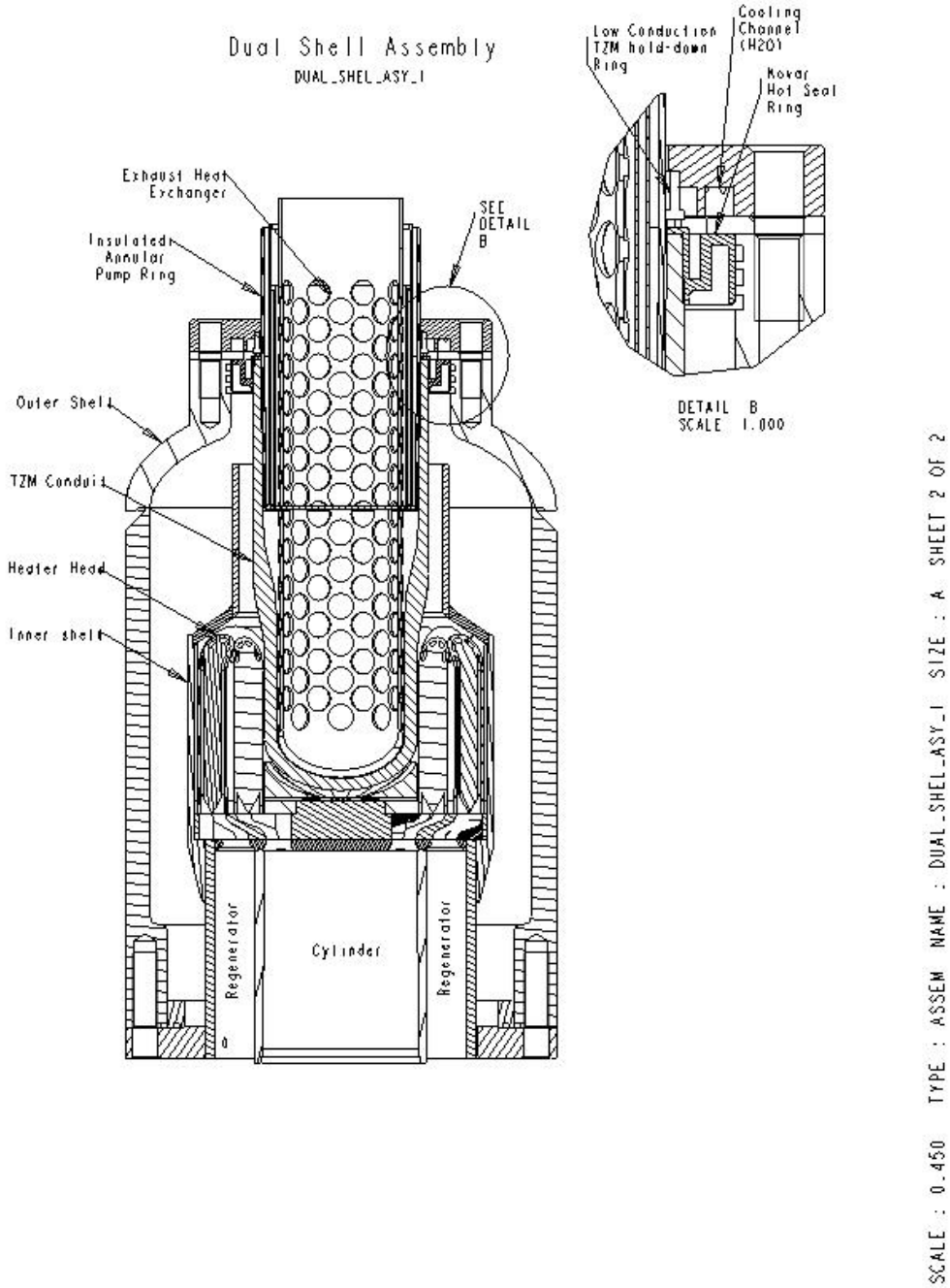

Figure 27- Shows the Alpha dual-shell configuration
Source: ADI Thermal Power

Beta Configuration

The beta engine integrated design improvements to increase maximum heat flux through the exhaust heat exchanger. An increase from 20 kWth heat flux to 60 kWth was planned through an area increase in the exhaust heat exchanger.

The current surface area increase from the alpha engine to the beta was partially constrained by existing billets of TZM material available to ADI. The alpha engine had utilized a 3.5 inch diameter TZM billet which allowed a 2.5 inch combustion heat exchanger. Two 5 inch diameter TZM billets were obtained for the beta engines based on initial design studies on the low NOx heat exchanger requirements. The new billets were larger in diameter and longer to accommodate the larger combustion heat exchanger requirements. Note in Figure 26: The pump ring covers the top 60% of the nodes on the beta engine. This ring serves to convectively circulate (pump) liquid silver from the top nodes to the reservoir in the middle of the TZM. Initial beta engine design concepts had this pump ring extending several inches above the TZM to allow room for increased combustion heat exchanger surface area. The beta engine uses a similar combustion heat exchanger and TZM design philosophy relative to the alpha that resulted in an increase in combustion heat exchanger diameter from 2.5 inches to 3.25 inches for the 5 inch TZM billet. Alpha engine testing of extended pump rings, above the TZM, showed instabilities moving increasing amounts of heat flux over extended distances. The configuration in figure 29 shows an optimized pump ring length that is only slightly above the TZM top for the beta engine design.

At the time the beta estimates were made, the combustion heat exchanger nodes, for the alpha configuration, extended only 0.4 inches into the exhaust flow and had a diameter of 0.5 inches. The nodes are filled with liquid silver and transfer the heat from the node to the TZM wall through convection of the liquid silver within the node. The sizing requirements for the beta combustion heat exchanger utilized the 0.5 inch node diameter to maximize wetted surface area exposed to the exhaust. Smaller node diameters pack more tightly within the combustion heat exchanger and give a higher total surface area. The increased combustion heat exchanger diameter, for the beta, resulted in a node length increase from 0.4 inches to 0.9 inches. When the first beta combustion heat exchanger was tested, it was discovered that the nodes were too narrow to efficiently transfer the heat from the node to the TZM wall without overheating. Node diameters were then increased, from 0.5 inches to 0.625 inches, which solved the overheat problem, but resulted in a reduction in total surface area. Further optimization of the nodes resulted in a node reduction to 0.5625 inch diameter. This design increased the surface area, relative to 0.625 inch nodes, but is currently showing slight over heat issues on the bottom nodes at the 3,200 °F combustion temperature. A planned design improvement (destined for configuration beta prime) is to use larger nodes at the bottom of the combustion heat exchanger and maintain the smaller nodes at the top where the temperature is lower.

The combination of pump length restriction and required node size increase resulted in a beta combustion heat exchanger growth to double the surface area of the alpha. This was only half of the planned growth requirement relative to the alpha.

Several design lessons learned were obtained once the beta configuration was fabricated and tested.

- The temperature drop through the TZM wall is 300 °F due to its thickness and limited surface area next to the heater head tubes.
- The silver pump ring, covering 60% of the node area, must pump the heat from the top nodes into the small silver reservoir. This heat flux must then travel down to the heater head tubes to provide useful work.
- A substantial fraction of the heater head tube length is below the TZM conduit and must rely on convective heat transfer within the silver to allow the heat transfer.
- The hot seal, located at the top of the TZM, is becoming too hot at the Viton o-ring interface causing the o-ring to deform and lose seal effectiveness.
- The thermal expansion effects on the complete heater head assembly resulted in a heater head shell which was very stable over repeated heat up and cool down cycles.
- The integration of the Haynes 230 into the inner shell configuration proved to work successfully.
- The maximum heat flux obtained was 40 kWth through the exhaust heat exchanger, which limited the maximum power output to 12 kWe.

Figure 28 - Beta Engine
Source: ADI Thermal Power

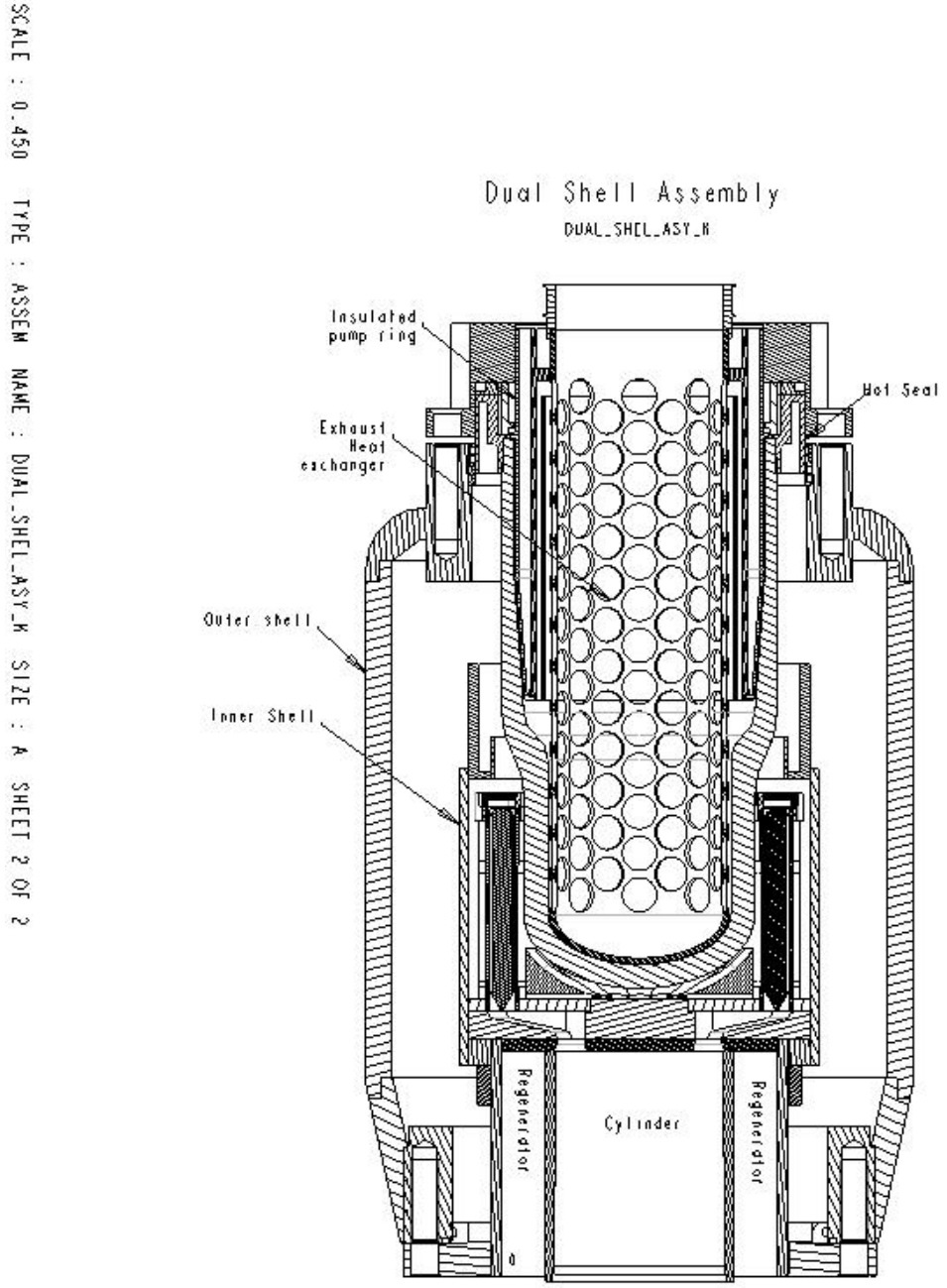

Figure 29 - Beta dual-shell
Source: ADI Thermal Power

Beta Prime Configuration

Design constraints with the beta engine heat exchanger resulted in only 67% of the required heat flux as planned for a 25 kWe engine configuration. The results from extensive testing with the beta engine required a rethinking of possible solutions to the surface area restriction issue.

ADI still had a second TZM billet that was 5 inches in diameter. An improved design concept, shown in Figure 28, evolved, which increased the surface area used to transfer heat through the TZM wall and increases the node surface area. The concept is to shorten the silver pump ring located between the TZM and the combustion heat exchanger thus exposing more TZM area and reducing the temperature drop through the wall. Node surface area is increased by using the full 5-inch TZM diameter and growing the combustion heat exchanger from 3.25 inches diameter to 4.25 inches. The combustion heat exchanger is reduced in diameter at the top to allow room for a shortened pump ring. These two design improvements doubled the combustion heat exchanger surface area.

The next design improvement involved the heater head integration relative to the TZM conduit and the requirement to pump silver down to the heater head elements. The TZM conduit heat transfer area increase allows a reduction in the temperature drop through the TZM from 300 °F to 150 °F. This requires that the silver region, outside the TZM wall, be in contact with the extended heat transfer area. In order to efficiently use this additional area, a heater tube length increase was investigated using the NASA Hfast code. The engine performance effect, due to area of the heater head, involves a trade between helium pumping power and temperature drop between the helium and the liquid silver heater head reservoir. The increase in pumping power, to pump the helium through the longer heat exchanger, results in an efficiency reduction of 0.8% relative to the optimum heater head size. The counterbalancing effect of increased heater head area is to raise the helium temperature by making the heater head more effective in transferring energy. For an optimum Stirling engine, there is a temperature difference between the heater head, and the helium of approximately 150 °F. By doubling the heater head area the helium temperature rises by one half of this value or 75 °F. The NASA Hfast code predicts a 1% improvement in efficiency due to the higher helium temperature. Summing these two effects; for an optimum heater head increase in area by doubling, results in approximately no change in engine efficiency. For the ADI engine, the location and size of the heater head tubes within the liquid silver reservoir affects the temperature distribution within the reservoir. By placing the heater head tubes directly adjacent to the combustion heat exchanger heat transfer zone, a maximum temperature will exist across the entire heater head tube. The new configuration uses this information to adjust the heater head tubes so that they are raised to match the zone on the TZM, which is transmitting the heat flux. A new integration feature to accomplish this is to combine the heater head base plate with the

lower silver pump plate; located below the TZM. This raises the heater head individual tubes so that they are radially adjacent to the combustion heat exchanger nodes. Contouring and raising the heater head base plate also allows the internal flow channels, for the helium, to transition gradually between the heater head tubes, the upper cylinder plenum, and the regenerator plenum.

The TZM hot seal is the next area that was improved. The hot seal is made of Kovar which is an alloy that has thermal expansion characteristics similar to the TZM. The purpose of the hot seal is to provide a movable pressure seal between the TZM and the outer shell to allow for differential thermal expansion effects. The hot seal is brazed to the TZM with a gold-nickel-palladium alloy that provides a structural joint at operating temperature. The current hot seal junction operates at 1,500 °F on the inner diameter and 300 °F on the outer diameter. The new configuration operates at 1,800 °F on the inner diameter due to the shorter combustion heat exchanger pump ring. This is a 25% increase in temperature drop across the hot seal. The hot seal was doubled in width, from 0.5 inch to 1.0 inch, and included the addition of two internal webs to lengthen the heat transfer path. A further improvement in the hot seal design involved the integration of two ceramic rings placed on the hot seal inner diameter face and along the top inner face. The outer top face of the hot seal still rests on a water cooled ring brazed into the outer shell hold down plate. The two ceramic rings provide an insulating structural column for both the TZM and the hot seal.

The new beta prime configuration provides a complete system integration of all the critical high temperature dual-shell components. This configuration based on current test results, allows the dual-shell engine to run at 25 kWe full power conditions while also meeting the low NOx maximum combustion temperature requirements of 2,600 °F.

The beta prime configuration, which began testing in March 2008, integrates several improvements into the dual-shell assembly relative to the beta configuration:

- Reduced temperature drop through the TZM allowing 2,050 °F heater head silver temperature with increased engine efficiency.
- Shortened silver pump ring covering only 20% of nodes.
- Doubling of node surface area allowing low NOx exhaust features at 25 kWe engine power.
- Doubling of heater head tube length positioned adjacent to node surface.
- Improved integration of heater head base plate.
- Improved hot seal configuration reducing thermal losses.
- Improved outer shell clearance to inner shell reducing thermal loss.

Figure 30 - Beta Prime Configured Engine
Source: ADI Thermal Power

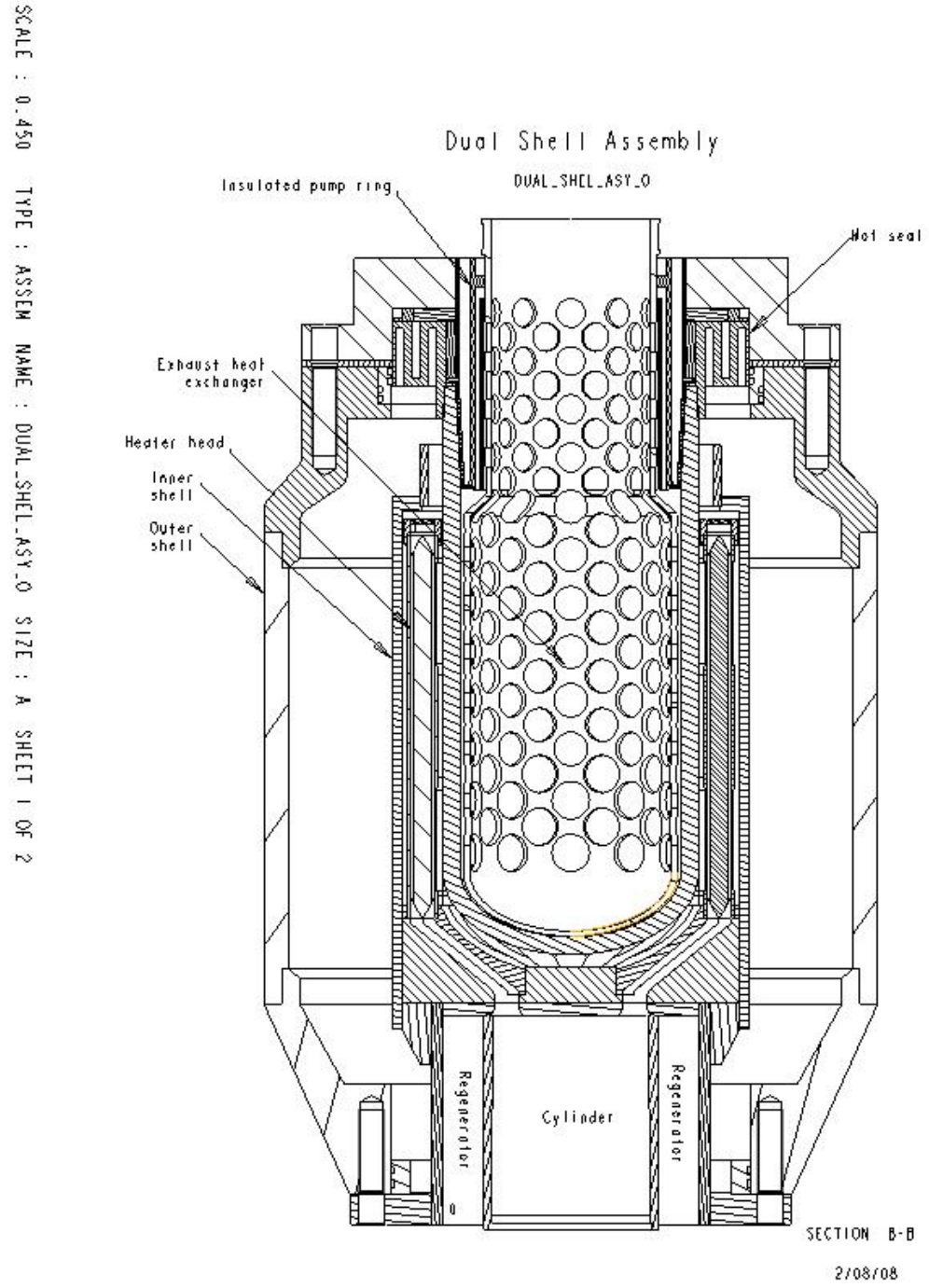

Figure 31 - Beta Prime Configuration details
Source ADI Thermal Power

3.0. Conclusions and Recommendations

- The integration of the swirl burner design resulted in a highly efficient and throttleable, approach which will also work with the low NOx burner,
- Working and testing sub-components of the engine proved a very effective technique for design and problem solving. The water cooled burner test stand proved extremely valuable giving real time testing of burner components.
- A 3-D analysis of the TZM conduit proved valuable for optimizing the shape and eliminating stress concentrations.
- Kovar for the hot seal proved a workable material.
- The braze techniques developed for the TZM and Kovar junction worked very well.
- Chromium coatings on the TZM significantly enhanced the oxidation resistance of the material.
- Vapor plating processes allow coatings which significantly enhance the surface barriers for liquid metal containment.
- Pure metals, such as Silver, for the heat transfer within the hot engine sections proved to be a workable solution.
- The diffusion bonding process used for the heater head tubes and internal stars proved to be a very robust and effective design concept providing a significant structural benefit.
- Thermal transients during cool down within the heater head and exhaust heat exchanger which contain a liquid metal can be successfully designed and integrated.
- Detail 2-D and 3-D analysis significantly aid in overcoming design issues.
- Mesh regenerators provide a measureable performance benefit over foil regenerators..
- The integration of the exhaust heat exchanger into the heater head required significant engine tuning in order to produce a configuration that allows the required 60 kWth of heat flux into the engine.
- The alpha engine proved to be a very stable test platform for working heat transfer issues on the engine hot section.
- Testing of the beta engine provided a doubling of the heat flux into the engine and allowed steady ½ power testing.
- The use of Haynes 230 alloy proved effective in the engine hot section.
- The heater head benefited from maintaining straight heater head tubes using an upper manifold.

- The beta prime configuration evolution was a direct result of intensive research and testing with the alpha and beta engines and should meet all the engine objectives.

3.1. Commercialization Potential

The dual-shell Stirling engine offers a significant cost benefit to the distributed power market. The physics of the high temperature components were successfully demonstrated with this program providing the base for continued engine development and testing. Engine efficiency is a key driver in the distributed power market. The dual-shell provides up to 45% conversion from fuel to electric. Test data from this program gave a projected performance for the beta prime configuration of between 40% and 45%.

The engine can integrate with heating and cooling systems to create an extremely efficient combined heat and power system. The engine can also be integrated with Solid Oxide and Molten Carbonate Fuel cells to create systems with electrical efficiencies exceeding 60%. ADI is targeting the commercial and industrial market segments with both a 25 and 100 kWe systems. The "dual-shell" Stirling engine is designed to meet the strict ARB 2007 emission standards for California.

ADI has considerable interest from natural gas providers, regional power companies, local generator retailers, and regulators at various sustainable energy conferences. The largest near term market is in the growing worldwide demand for distributed and backup power systems. The recently emerging *Distributed Power* market refers to electricity generation at levels less than 1 megawatt (MW) per installation. According to the 1999 Distributed Power Forum, at least 20% of all future worldwide electricity will be provided through distributed power sources. In the United States alone, this equates to a demand for 20 GW over 10 years or 800,000 equivalent 25-kilowatt units. If each 25 kWe unit is worth $15,000, a conservative estimate, then the total 10-year US market is worth *at least* $12 billion. The worldwide 10-year market is projected at over 100 billion dollars with a significant portion of the demand located in Western Europe and in developing countries. Recent information from EPRI (Electrical Power Research Institute) indicates that the world demand for new power is potentially much higher and is a long-term phenomenon. EPRI predicts a 200 GW/year increase in world demand over the next 50 years.

To be cost competitive, production rates are planned to rise to 50,000 units per year. During the manufacturing ramp-up the price starts at $1,200/ kWe and drops to $600/

kWe as production rate increases. To support sales during the early time period customers must be available who:

- Value on-site power for its continuous power, reliability, fuel flexibility, or grid benefits.
- Have industrial processes that produce a high temperature waste heat stream.
- Have a system that operates on solar heat input or biomass.
- Locate in a state where electricity prices are above the national average.

Several selected areas were identified to support initial engine sales:

- Electric utilities in California, Hawaii, and New York would benefit by installing 25 to 100 kWe units at large supermarkets or big box stores to assist with grid overloading issues. The units would be continuous load and supply primarily electricity as a base load. Heating would be available as needed by the store. States may offer buy-downs as incentives to the power company.
- Natural gas utilities would benefit by owning systems and supplying electricity to the same critical grid areas. ADI has been working closely with natural gas utilities to keep them informed of the engine progress and to understand their customer requirements.
- Utilities are looking for ways to balance electrical load from windmills and solar power that die down at night. Currently, diesel engines balance this load.
- Night time truck stops along interstates provide the opportunity to run 25 to 100 kWe units, powered by propane or liquid natural gas, to provide electricity to trucks during the night. Electric power would maintain the truck refrigeration and cab heat while the drivers slept. The Stirling engine operates much more quietly than a truck idling and provide power without the diesel pollution.
- Digester gas and landfill gas provides a fuel source for generating onsite electric power. The external combustion Stirling engine burner can be designed to operate with the contaminants in the fuel stream without damaging the engine's moving parts and cylinders.

3.2. Recommendations

The beta prime dual-shell begins engine testing in April 2008. This is a direct design evolution of the alpha and beta engines and will provide a base engine platform for performance optimization. Reaching the design goal of 60 kW of heat flux into the engine at temperature is a very significant achievement. Testing over the next several months will allow the following items to be validated:

- Verification of steady 25 kWe power output.
- Zero vibration operation using the rhombic drive.

- Integration of low friction rings in the power piston.
- Integration of an automated throttling system.
- Optimization of the regenerator .
- Optimization of the engine with both helium and hydrogen.
- Integration of the poly phase generator.
- Endurance testing of the engine including field tests.
- Optimization of a 100 kWe dual-shell engine.
- Endurance testing and field testing of the 100 kWe engine.
- Manufacturing and cost reduction processes.

3.3. Benefits to California

The ADI dual-shell Stirling engine-generator system is targeted for California's Distributed Power Generation growth market. The California demand forecast for new power is 6,000 MW through the year 2007. California is projecting up to 40% or 2,400 MW of this new power will come from new distributed power systems. ADI is projecting a market penetration of approximately 25% of the California distributed market mentioned above. A market of this size requires 4,000 25 KW equivalent units per year. This represents 100 MW of new power systems per year of California's new requirements over the next six or seven years. This does not address the California market for biomass as a fuel source.

The biomass energy report in California compiled the energy available from various burnable Biomass sources as over a 1,000 MW of power annually. This represents a potential market of 40,000 25 KW generator systems in California alone if biomass is adopted as a major conventional fuel source. The near term combined market projections for California indicate a possible 10,000 25 kWe equivalent unit per year requirement. The combined market would consist of the distributed power applications mentioned above and Biomass.

California is leading the way with the introduction of distributed power. Three other market applications that have not been quantified in California include Demand Side Management, Rural Electrification, and Standby Power systems. These markets have their own peculiarities and will add to the demand for the ADI system. The expansion of this market into the rest of the United States would increase the total addressable market size by a factor of at least ten, to approximately 100,000 25 kWe equivalent units per year.

Glossary

Specific terms and acronyms used throughout this work statement are defined as follows:

Acronym	Definition
ASERTTI	Association of State Energy Research and Technology Transfer Institutions
ARB	California Air Resources Board
CCHP	Combined cooling , heating and power
CHP	Combined heat and power
CPR	Critical project review
DG	Distributed generation
GTI	Gas Technology Institute
kWe kWth	Kilowatts Electrical Power Kilowatts Thermal Power
Metex	A woven stainless wire mesh used for regenerator (brand name)
NOx	Oxides of nitrogen (atmospheric pollutant)
Regenerator	Mechanical device capable of extracting, storing, and re-inject thermal energy from a working fluid
TZM	Titanium zirconium molybdenum alloy (Designed for Strength at temperature)
UCC.1	Uniform Commercial Code (Financing Statement)