Energy Research and Development Division
FINAL PROJECT REPORT

SMART GRID ROADMAP FOR RENEWABLES INTEGRATION

Prepared for: California Energy Commission
Prepared by: KEMA, Inc.

JULY 2013
CEC-500-2010-029

Prepared by:

Primary Author(s):
Ralph Masiello
Richard Fioravanti
Karin Corfee
Nellie Tong
Betty Seto
Ron Chebra

KEMA, Inc.
Oakland, CA 94612

Contract Number: 500-06-014

Prepared for:

California Energy Commission

Dave Michel
Project Manager

Mike Gravely
Office Manager
Energy Efficiency Research Office

Laurie ten Hope
Deputy Director
ENERGY RESEARCH AND DEVELOPMENT DIVISION

Robert P. Oglesby
Executive Director

DISCLAIMER

This report was prepared as the result of work sponsored by the California Energy Commission. It does not necessarily represent the views of the Energy Commission, its employees or the State of California. The Energy Commission, the State of California, its employees, contractors and subcontractors make no warranty, express or implied, and assume no legal liability for the information in this report; nor does any party represent that the uses of this information will not infringe upon privately owned rights. This report has not been approved or disapproved by the California Energy Commission nor has the California Energy Commission passed upon the accuracy or adequacy of the information in this report.

PREFACE

The California Energy Commission Energy Research and Development Division supports public interest energy research and development that will help improve the quality of life in California by bringing environmentally safe, affordable, and reliable energy services and products to the marketplace.

The Energy Research and Development Division conducts public interest research, development, and demonstration (RD&D) projects to benefit California.

The Energy Research and Development Division strives to conduct the most promising public interest energy research by partnering with RD&D entities, including individuals, businesses, utilities, and public or private research institutions.

Energy Research and Development Division funding efforts are focused on the following RD&D program areas:

- Buildings End-Use Energy Efficiency
- Energy Innovations Small Grants
- Energy-Related Environmental Research
- Energy Systems Integration
- Environmentally Preferred Advanced Generation
- Industrial/Agricultural/Water End-Use Energy Efficiency
- Renewable Energy Technologies
- Transportation

The Smart Grid Roadmap for Renewables Integration is the final report for the Energy System Integration Markets Assessment and Technology Information on Smart Grid and Renewables Integration project (Contract Number 500-06-014, Work Authorization Number 19) conducted by KEMA, Incorporated. The information from this project contributes to Energy Research and Development Division's Systems Integration Program.

For more information about the Energy Research and Development Division, please visit the Energy Commission's website at www.energy.ca.gov/research/ or contact the Energy Commission at 916-327-1551.

ABSTRACT

The California Energy Commission Smart Grid Roadmap addresses how smart grid technologies can promote and enable high renewable portfolio standards and renewable resources' penetration in California. The report identifies research and development and policy topics that should be considered to promote renewables. As part of the report, the existing state of smart grid and associated technologies is surveyed. A gap analysis of today's capabilities to a vision of a high-renewable penetration and smart grid environment is performed. A set of linked matrices is provided that enables prioritizing smart grid research and development via linkages to objectives that promote renewables penetration, such as market and operations participation and reducing interconnection costs. Smart grid capabilities, such as visibility, controllability, stability enhancement, and bidirectional distribution flow adaptation, are tactics that support the objectives. By evaluating the degree to which particular tactics support and rank the objectives and measure the effect of research and development topics on the tactics, one can prioritize each research and development topic in terms of its effect on the overall objective of renewables facilitation.

Keywords: Application support system, building automation system , building to grid, communications system, distributed intelligence, distributed resources, electric energy technologies, electric vehicle, electric vehicle integration, electricity storage, feeder automation, home area network, home automation system, infrastructure, intelligent electronic device, pluggable hybrid electric vehicle, renewable resource, renewable portfolio standard, smart grid, substation automation, vehicle to grid

Please use the following citation for this report:

Masiello, Ralph, Richard Fioravanti, Karin Corfee, Nellie Tong, Betty Seto, and Ron Chebra. (KEMA, Inc.). 2010. ***The Smart Grid Roadmap for Renewables Integration.*** California Energy Commission. Publication number: CEC-500-2010-029.

TABLE OF CONTENTS

PREFACE ..... **i**

ABSTRACT ..... **ii**

TABLE OF CONTENTS ..... **iii**

LIST OF FIGURES ..... **v**

List of Tables ..... **vii**

EXECUTIVE SUMMARY **1**

Introduction 1

Purpose 1

Project Objectives 1

Project Outcomes 2

Conclusions 3

Recommendations 4

Benefits to California 9

CHAPTER 1: Introduction **10**

1.1 Background and Overview 10

1.2 Project Objectives 10

CHAPTER 2: Smart Grid Overview **12**

CHAPTER 3: **19**

Current Status of Smart Grid **19**

3.1 Intelligent Electronic Devices—(IEDs) 19

3.1.1 Definition of Technology 20

3.2 Communications Networks 29

3.3 Application Support Systems 40

3.4 Building Automation and Home Automation Systems 45

3.5 Home Area Network (HAN) Technologies 51

3.6 Substation Automation and Communications Systems 56

3.7 Feeder Automation and Distributed Intelligence 61

3.8 Electricity Storage 71
3.9 Vehicle to Grid (V2G) 76
CHAPTER 4: 86
Market Trends and Growth Patterns in Smart Grid Technologies 86
4.1 Stimulus Package 86
4.2 Intelligent Electronic Devices – (IEDs) 88
4.3 Application Support Systems 93
4.4 Building Automation 94
4.5 Home Area Network (HAN) Technologies 95
4.6 Substation Automation and Communication Systems 97
4.7 Feeder Automation and Distributed Intelligence 98
4.8 Electricity Storage 99
4.9 Vehicle to Grid (V2G) 101
CHAPTER 5: 103
Market Factors Impacting Market Adoption 103
5.1 Impact of the Economic Crisis 103
5.2 Impact of the Stimulus Legislation 104
CHAPTER 6: 106
Regulatory Factors 106
6.1 Cost Recovery Issue for Smart Grid 106
6.2 Performance-Based Rates and Reliability Targets and Penalties 106
6.3 Introduction of Standards for Smart Grid Systems 106
6.4 Third-Party Access to Meter Data and Consumer Data 107
6.5 Feed-In Tariffs, Two-Way Metering Tariffs 108
6.6 Depreciation Schedules and Early Replacement of Legacy Technologies (Stranded Asset) 108
6.7 Regulatory Treatment of Electricity Storage 108
6.8 Market Integration of Consumer Real-Time Price Response 108
CHAPTER 7: 110

Project Outcomes – Smart Grid Roadmap **110**

7.1 Description of Smart Grid Roadmap 111

7.2 Vision for Direction of California Smart Grid 112

7.3 Description of Smart Grid 113

7.4 Roadmap Objectives and Technology Areas 117

CHAPTER 8: **120**

Method for Developing Smart Grid Roadmap **120**

CHAPTER 9: **123**

Recommendations **123**

9.1 High-Speed Monitoring and Control 123

9.2 Renewables to Provide Dynamic Performance Support 125

9.3 Electricity Storage 126

9.4 Distributed Resources 128

9.5 Electric Vehicles 129

9.6 Bidirectional Flows 131

9.7 Dynamic Pricing 132

9.8 Low-Voltage Direct Current Applications 133

GLOSSARY **134**

REFERENCES **140**

LIST OF FIGURES

Figure 1: Graphic of the Smart Grid Roadmap 2

Figure 2. Diagram of T&D IED systems and components 19

Figure 3. Estimated market share 28

Figure 4. Example of communication network 29

Figure 5. Typical point to point network 35

Figure 6. Mesh network 36

Figure 7. Broadband over power line 36

Figure 8. Medium speed over power line (PLC) 37
Figure 9. Common carrier wireless 38
Figure 10. WiMax network 38
Figure 11. BAS system 46
Figure 12. Home area network 51
Figure 13. Southern California AMI efforts 52
Figure 14. Overview of range of substation automation components 57
Figure 15. IEC 61850 station 60
Figure 16. 61859 data layers and standards 61
Figure 17. Feeder automation and integrated voltage and VAR control 62
Figure 18. Comparison of customer outage times, without and with feeder automation 62
Figure 19. Sequence of operational steps in FLISR with Fault Between Substation #2 and #3. 64
Figure 20. Sequence of operational steps in FLISR with Permanent Fault 64
Figure 21. Sequence of operational steps in FLISR with Circuit Breaker Trip 65
Figure 22. Sequence of operational steps in FLISR with Automated Switch Opening 65
Figure 23. Sequence of operational steps in FLISR with Fault at Off-Peak and Load Picked Up 66
Figure 24. Diagram of storage in a smart grid 71
Figure 25. Photos of trailer systems for Altairnano (left) and A123 systems (right) 72
Figure 26. Diagram of PHEV role in smart grid 76
Figure 27. Photos of Toyota Prius and Chevy Volt 79
Figure 28. Photos of smart charging tools 80
Figure 29. Shift from dedicated event recorders to IEDs 90
Figure 30. Graphic of the smart grid roadmap 110
Figure 31: Main components of California's smart grid 111
Figure 32. Diagram of the current State of California electricity grid 114
Figure 33. Diagram of future State of the California electricity grid 115
Figure 34. Diagram of future State of California electricity grid for renewable 116
Figure 35. Matrix weighting renewable facilitation and smart grid tactical objectives 121

Figure 36. Matrix weighting technologies for R&D investment 122
Figure 37. Smart grid vision and roadmap 123

LIST OF TABLES

Table 1: Contrast of Past and Future Grids 3
Table 2: Key Study Recommendations 5
Table 3. Contrast of past and future grids 13
Table 4. Digital protection IEDs 22
Table 5. Projected spending for 2008 (in $ million) 23
Table 6. Top barriers for increased substation automation and integration 26
Table 7. Summary of communications technologies 30
Table 8. Existing players in this space 45
Table 9. List of in-home display vendors 56
Table 10. Differences between operational data and non-operational data 58
Table 11. Substation automation suppliers 59
Table 13. Summary of key suppliers in storage 74
Table 14. List of manufacturers of PHEVs and EVs 84
Table 15. List of smart charging companies 85
Table 16: Economic stimulus bill energy provisions 87
Table 17. High-speed monitoring and control smart grid vision 124
Table 18. Renewables to provide dynamic performance support smart grid vision 125
Table 19. Storage smart grid vision 127
Table 20. Distributed renewables smart grid vision 129
Table 21. Electric vehicle and plug-in hybrid electric vehicle smart grid vision 130
Table 22. Bidirectional flow smart grid vision 131
Table 23. Dynamic pricing smart grid vision 132
Table 24. Low-voltage direct current wiring smart grid vision 133

EXECUTIVE SUMMARY

Introduction

The California Energy Commission has identified the potential for smart grid technologies to promote the growth of renewable resources to the 33 percent renewables target and beyond. Most Americans know that, since the world's first commercial generator in New York City designed by Thomas Edison began operation, the grid only allows electricity to flow one way from the power plants to consumers. Today using a Smart Grid, a two-way power flow by adding computer intelligence and communications to the existing electricity distribution network is possible. The smart grid will be able to provide distributed renewable power, improved air quality, and help achieve California's AB32 greenhouse gas reduction goals.

The Energy Commission tasked KEMA in 2008 to create a roadmap that encourages deployment of smart grid technologies that will allow greater integration of renewable technologies into the grid and help California meet its future Renewables Portfolio Standard. KEMA completed this task in 2009 with the Roadmap that you are now holding. The idea was to use the roadmap for planning research and development investments for California.

California consistently leads the country in advanced electric energy technologies and applications, and the trend has continued with smart grid technologies. Efforts to install components of the smart grid are occurring throughout the state. Therefore, this roadmap takes into consideration efforts and advancements to the California electric system that has already occurred. The intention is to use the roadmap to leverage the activities that have already occurred and then to create a path that allows those efforts to converge to the final California Smart Grid vision.

Purpose

This study provides a market assessment of the current, emerging, and promising new smart grid technologies that are expected to aid increased renewable penetration in the future of California. The focus is on smart grid technologies that will or could potentially affect the ability of California to increase the penetration of renewables on the grid to 33 percent and then to 50 percent or even higher to meet California's renewables portfolio goals.

Study objectives include conducting a market analysis on smart grid technologies, including market trends, growth patterns, regulatory factors, and design factors that affect the implementation of these technologies over the next 10 years. Additionally, a key objective is to develop a roadmap for research and development activities that will help advance a smart grid that promotes enhanced penetration of renewables on the California grid.

Project Objectives

The primary objective of this study is to create a roadmap for research and development initiatives for California related to smart grid technologies that will help promote enhanced penetration of renewables on the grid.

Project Outcomes

The research team used the following roadmap process:

- Identify the current state of the grid in California.
- List the objectives that need to be met to advance and facilitate renewable implementation.
- List the technologies that will be required to meet the objectives.
- Create a matrix that links the objectives and technologies.
- Develop a weighting scheme to assign relative importance to different technologies listed in the matrix.
- List the action items and research recommendations for the Energy Commission.

This study provides an examination of the technologies that will help California attain the future state of a smart grid that serves to promote enhanced penetration of renewables on the grid. The smart grid vision articulated by this study is summarized in Figure 1 below.

Figure 1: Graphic of the Smart Grid Roadmap

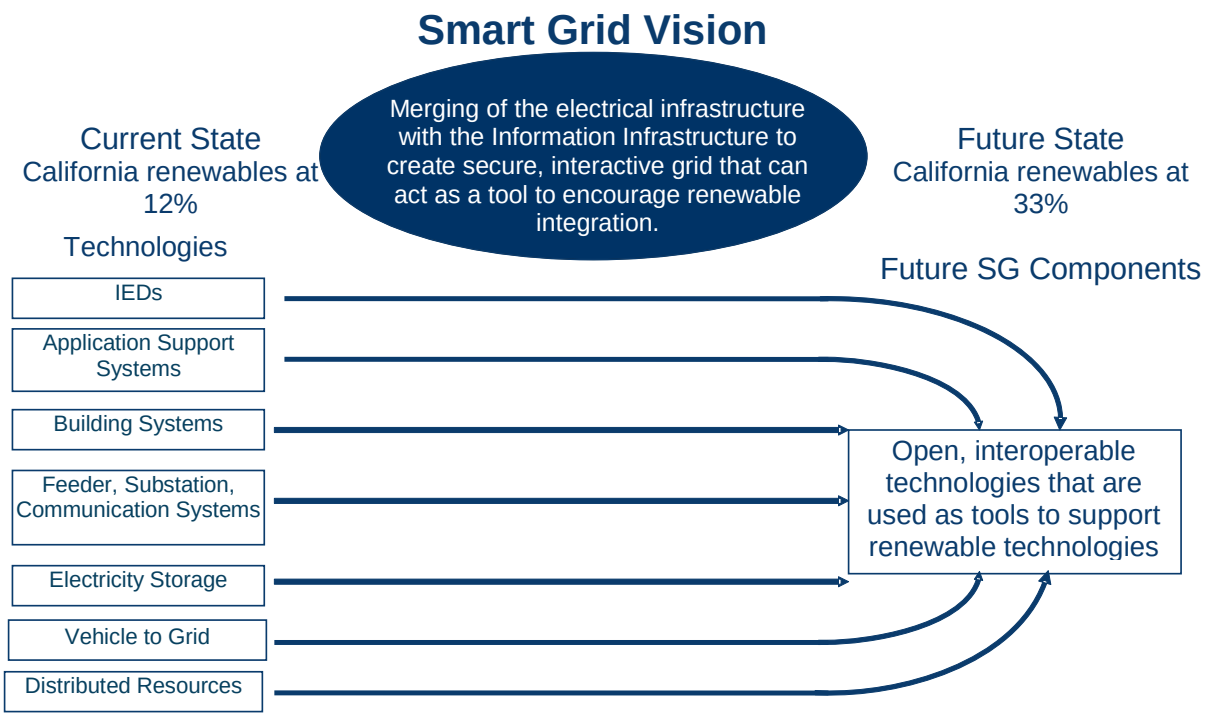

Source: KEMA

A contrast of California's current grid and the 21st century smart grid is provided in Table 1.

Table 1: Contrast of Past and Future Grids

20th Century grid	21st Century smart grid
Electromechanical	Digital
Very limited or one-way communications	Two-way communications everywhere
Few, if any, sensors —*blind* operation	Monitors and sensors throughout—usage, system status, equipment condition
Limited control over power flows	Pervasive control systems—substation, distribution, and feeder automation
Reliability concerns—manual restoration	Adaptive protection, semi-automated restoration and, eventually, self-healing
Suboptimal asset utilization	Asset life and system capacity extensions through condition monitoring and dynamic limits
Stand-alone information systems and applications	Enterprise-level information integration, interoperability, and coordinated automation
Very limited, if any, distributed resources	Large penetrations of distributed, intermittent, and demand-side resources
Carbon-based generation	Carbon limits and green power credits
Emergency decisions by committee and phone	Decision support systems, predictive reliability
Limited price information, static tariff	Full price information, dynamic tariff, demand response
Few customer choices	Many customer choices: value-added services, integrated demand-side automation

Conclusions

For this roadmap, the vision for the direction of the California Smart Grid is stated as:

> *Through research and development, encourage the product and technologies that create an enhanced electric transmission or distribution network that extensively uses sensors, controls, data communications, and information technologies to improve reliability, economics, and security of the power system, while accommodating and encouraging greater levels variable renewable technologies, storage resources, demand response, distributed generation, and overall automation.*

Major observations of the study include the following:

- High renewables portfolio standard penetration implies large proportions of inverter-based generation with a corresponding decrease in overall system inertia and governor response. The phasor measurement systems pioneered in California offer opportunities for applications to monitor this phenomenon, adapt to it, and provide stability

enhancement and wide area protection. Continued research and development in these areas are needed.

- Electricity storage is becoming technically and economically feasible at large renewable generation sites (wind farms and central thermal solar), on the transmission grid, in substations, along distribution feeders, and *behind the meter*. Storage offers a host of benefits in terms of daily economics, reliability, and integration of renewables. However, the control algorithms and the economics are not fully understood; it is not clear how much storage or what characteristics will best serve the state, and there are major regulatory issues to address around asset classification, cost recovery, and treatment of stored energy.
- A large fraction of the renewable resources will be distributed—either behind the meter or on the distribution circuit (especially rooftop photovoltaics [PV]). These resources need to be visible, controllable, and able to participate in markets and grid operations. At 33 percent of system load, it is inconceivable that renewable resources will continue to be an element of the system with which the rest of the system, operations, and markets will have to adapt with no provisions for control.
- At high penetrations of distributed resources, it is conceivable that some feeder circuits may experience reverse (that is, nonradial) flows under conditions of off-peak load and high renewable production. The tools for analyzing this, planning for it, operating the circuits, and programming protective devices do not exist. A holistic approach to understanding the reality of this possibility, developing the needed tools, and ensuring appropriate regulatory treatment is required.
- California is expected to be one of the regions where electric vehicles will see early and rapid adoption. Today's pluggable hybrid vehicles pose neither a problem nor an opportunity for the grid, but future battery electric vehicles, with large battery capacities capable of rapid charging, will. Provisions for managed charging are likely to be essential. The possibility of *meter on the vehicle* bears investigation as a way of greatly advancing grid integration and vehicle-targeted tariffs and other programs.The state automated metering infrastructure programs have focused on integrating home automation networks and smart appliances with the grid via the meter as a way to implement dynamic pricing and advanced demand response. However, a major share of electric load is in commercial facilities that have building automation systems. Many of these commercial facilities will also have dis*tributed generation* resources in future. Little has been done to integrate commercial building automation systems with market and grid operations beyond simple thermostat setback. This may present an opportunity if the proper incentives can be put in place and the technology development accomplished.

Recommendations

This roadmap examines how specific technologies can evolve to become key components to the future smart grid and recommends research and development that will help set the foundation

for these specific technologies to reach their desired state. Some of these future smart grid needs must include:

- Marrying smart transmission and distribution apparatus and an Internet-like intelligence architecture.
- Embodying self-diagnosing and self-healing algorithms.
- Enabling distributed generation, renewable resources, and storage.
- Providing information to consumers and enabling consumer choice.
- Incorporating two-way flow of power and information.
- Processing transactions in a secure environment (in a cyber sense).
- Encompassing pervasive sensing and control capabilities.
- Integrating behind-the-meter intelligence at end devices with consumer and grid information technology systems.
- Monitoring health equipment.
- Enhancing operational efficiency of transmission and distribution system.
- Meeting regulatory reliability and power quality requirements.
- Reducing significant operation and maintenance costs
- Using both existing and new capital investments more fully.

Table 2 outlines key recommendations identified in this study.

Table 2: Key Study Recommendations

Smart Grid Vision	Issue	Technologies	Research and Development
High-speed monitoring and control.	• High renewables portfolio standard alters system dynamics resulting in lack of inertia, governor response, and different excitation.	• Synchrophasors and high-speed wide-area networks. • Integrated control of high-speed system resources (inverter-based renewables and large-scale fast grid-connected storage).	• Grid dynamics under high renewables portfolio standard : – Definitive studies on stability impacts of high renewables portfolio standard levels. – Control algorithms and technologies to use high-speed resources for stabilization. – Analysis to determine where to deploy high-speed resources. – Visualization concepts and technologies. – New algorithms for dynamic grid

Smart Grid Vision	Issue	Technologies	Research and Development
			control and stabilization.
Renewables provide dynamic performance to assist in system stability and control.	• Inverter electronics lack inertia, governor response, and excitation control for stability.	• Power electronics and control algorithms – Synthetic voltage dynamics, governor response, inertia.	• Power electronics and control algorithms to achieve synthetic excitation stabilization, inertia, governor response. • System performance under high renewables portfolio standard – With and without dynamic performance. – Integration with wide-area phasor measurement unit-based stability augmentation.
Storage is located throughout the electric infrastructure to support renewables penetration in terms of reliability, economics, operations, and deferred capital. Appropriate storage technologies are integrated in light of applications.	• Regulatory treatment of storage and asset classification. • Matching technologies to applications. • Deployment and control strategies linked to renewables.	• Market and operations analysis and simulation. • Existing and developing storage technologies, capabilities, and economics.	• Modeling and analysis to determine how much storage is necessary to support California renewables goals. • What role will storage play in helping the state achieve zero net energy residential and commercial new construction goals? • What are appropriate regulatory, market, and incentive treatments to encourage storage in support of renewables? • Identifying the control technologies and algorithms necessary to ensure storage can seamlessly work with wind, grid requirements when integrating CA renewables to the electricity grid. • Continued investigation of emission benefits of storage technologies, that is, commercial and industrial uses. • When storage is used in a multi-purpose application (as at a substation) how to allocate costs and benefits for cost recovery?

Smart Grid Vision	Issue	Technologies	Research and Development
Distributed renewables are dispatchable to provide system operations flexibility and are capable of participating in energy markets; allocation of costs and benefits (especially capital deferral) reflects the full value of renewable resources to the grid.	• Requirement needs for dispatchable distributed generation. • Communications. • Controls. • Tariff structures. • Metering. • Integrating advanced inverters.	• Storage – distributed generation configurations. • Using Internet-Wi-Fi for transferring energy information and energy management. • Intelligent electronic devices. • Next-generation inverters. • Home area networks and building automation systems with integrated demand response.	• Renewable controllability/renewables and storage. • Demonstrating residential solar-storage applications and testing of dispatchable, guaranteed responses. • Low-cost communications and control. • Market protocols for forecasting, scheduling, integration and capacity, metering standards. • Metering strategies and tariff structures that will promote increased penetration of renewables, enhanced distributed generation capability, and improved ability to achieve statewide zero-net-energy goals. • Demand forecasting and elasticity research and development
Pluggable hybrid electric vehicle and electric vehicle owners can enroll in green charging that matches vehicle charging to specific renewable power production and obtain incentives, renewable energy credits, and tariffs that promote enhanced renewable penetration.	• Pluggable hybrid electric vehicle and electric vehicle load is behind the meter. • No current separate measurement and control. • Pluggable hybrid electric vehicle and electric vehicle mobility. • Back-office billing and settlement.	• Wireless Internet and global positioning systems. • Metering on vehicles. • Cloud computing. • Home area network with integrated demand response.	• Vehicle metrology and applications. • Market/rate structures. • Separate settlements process.

Smart Grid Vision	Issue	Technologies	Research and Development
Distribution circuits capable of supporting high renewable portfolio standards will require adaptive protection, automation—and the possibility for bidirectional flows— and ability to adapt to high variability.	• Current engineering, protection, and operations are non-adaptive and provide for radial flows only.	• Distribution automation. • Intelligent electronic devices. • Substation automation. • Stochastic circuit analysis for planning and operation.	• Cost-benefit analysis of bidirectional flow. • Analytics for planning and operations. • Software upgrades to field devices (intelligent electronic devices). • Communications.
Building automation systems in commercial buildings and residential home area network systems can interact with hourly prices to create demand price elasticity in the markets.	• Lack of market protocols. • Difficulties in forecasting. • Lack of building area system/home area network applications support. • Communications and settlements. • Rate structures. • Device compatibility and interoperability.	• Internet. • Device networking. • Local optimization devices.	• Econometrics and forecasting. • Market structures and mechanisms. • Elasticity metrics. • Optimization strategies. • Time variant pricing strategies to harness power of distributed generation resources. • Uniform definitions of device object and attributes and binding rules.
Future zero net energy buildings will have low voltage direct current wiring linked to distributed renewable generation and storage – role of 120/240 volts alternating current is limited to grid interconnection.	• Eliminate conversion losses and stand-by demand. • More natural for distributed renewables. • Lack of standards for current commercial lighting/electronics	• Light emitting diode lighting. • Solid–state, low-voltage protection/ controls. • Electronics with standard DC supplies.	• Standards (Underwriters Laboratory, building code, electronics industry). • Cost-benefit analysis considering future electronics products, pricing, and any new/existing construction costs. • DC motor and drives in larger appliances. • Transition of home area network communications to direct current wiring base, low-voltage direct current power line carrier. • Embedded revenue-grade metering and home area network connectivity in large appliances.

Smart Grid Vision	Issue	Technologies	Research and Development
			• Software-defined radios and agile frequency transceivers for home area network gateways.

Source: KEMA

Benefits to California

California is on the verge of transforming into a modernized smart grid that will usher in new capabilities and tools for better reliability, security and flows of information. This study identifies specific components of a smart grid that have the ability to help integrate renewable technologies into the grid. Absent smart grid solutions, California will likely encounter higher market costs for additional ancillary services to manage renewable variability. Without the smart grid technologies identified in this report, the state will have to rely heavily on gas turbines and "command and control" demand response to maintain stable grid conditions under high renewables penetration. Using gas turbines to balance renewable variability is a technically viable strategy but is expensive, primarily due to fuel costs. Additionally, keeping units on-line under “reliability must run” conditions may result in increased emissions that could potentially offset the emissions savings garnered from the renewables. Moreover, the smart grid technologies identified for improved distribution automation will support high levels of distributed renewable production and likely avoid undesirable alternatives such as costly upgrades of distribution system apparatus or the limitation of renewable production so as to avoid the possibility of reverse power flow on the circuits. The specific research and development recommendations outlined in this study will help achieve a smart grid vision that is designed to promote the integration of high levels of renewables on the grid and, thus, help California attain its aggressive renewable portfolio standard goals.

CHAPTER 1: Introduction

1.1 Background and Overview

This project has the goal of assessing the ability of innovative technology deployment in California that will increase renewables' penetration on the grid to 33% in the near term and 50% or even higher over time. Therefore, it focuses on smart grid technologies that will be required to facilitate and positively impact the ability of California to increase renewables' penetration on the grid. It is envisioned that these technologies will accelerate the implementation of renewables in California, and they will help meet or exceed the Renewables Portfolio Standard (RPS) goals. The scope of potential solutions includes those that could be implemented to all industry segments, spanning generation, transmission, distribution, and end users.

The State of California consistently leads the country in advanced electric energy technologies and applications, and the trend has continued with smart grid technologies. Efforts to install components of the smart grid are already occurring throughout the state. Therefore, a key objective of this study is to take into consideration the efforts and advancements to the California electric system that have already occurred. The intention is to leverage the activities that have already occurred and then to create a roadmap that allows those efforts to converge to the final California Smart Grid vision.

1.2 Project Objectives

The purpose of this study is to provide a market assessment of the current, emerging, and promising new smart grid technologies that are expected to facilitate increased renewable penetration in the future in California. The focus is on smart grid technologies that will or could potentially impact the ability of California to increase the penetration of renewables on the grid to 33% and then to 50% or even higher to meet California's renewable portfolio goals.

Study objectives include conducting a market analysis on smart grid technologies, including market trends, growth patterns, regulatory factors, and design factors that impact the implementation of these technologies over the next ten years. Additionally, a key objective is to develop a roadmap for research and development (R&D) activities that will help facilitate a smart grid that facilitates enhanced penetration of renewables on the California grid.

The primary objective of this study is to create a roadmap for research and development initiatives for California related to smart grid technologies that will help facilitate enhanced penetration of renewables on the grid.

The research team utilized the following roadmap process:

- Identify the current state of the grid in California.
- List the objectives that need to be met in order to facilitate renewable implementation.

- List the technologies that will be required to meet the objectives.
- Create a matrix that links the objectives and technologies.
- Develop a weighting scheme to assign relative importance to different technologies listed in the matrix.
- List the action items and recommended research efforts for the Energy Commission.

Since this report's focus is on smart grid developments that facilitate high renewables penetration, current smart grid aspects that are purely reliability-oriented (asset management support and feeder reconfiguration, for instance) will not be emphasized. However, their contributions to renewables facilitation will be discussed.

1.3 Report Organization

This report is organized as follows:

- Introduction
- Smart grid overview
- Current status of smart grid
- Market trends and growth patterns in smart grid technologies
- Market factors impacting market adoption
- Regulatory factors
- Smart grid roadmap to encourage renewable technologies
- Roadmap objectives and technology areas
- Methodology for developing roadmap
- Recommendations

CHAPTER 2:
Smart Grid Overview

An assessment of current smart grid technologies and ongoing R&D reveals that there is no consensus, much less a standard, on the overall smart grid architectural paradigm. Below are two contrasting paradigms:

- **Centralized**: A set of hierarchical, centralized (i.e., utility) systems gather information—from smart grid sensors, and substation automation, home area network (HAN) computer, and vehicle-to-grid (V2G) electric vehicle (EV) systems—and make decisions about the use of smart grid operational elements for reliability and economics.
- **Decentralized and Market Based**: Utility systems communicate *out* requests for resource actions on some basis (described as locational needs and price offers) and consumer elements communicate back, with the ability to respond or some price-resource offer. Through high-speed ongoing negotiations, a system balance is identified that meets the centralized reliability needs and satisfies all parties. This approach is often described as an agent-based approach.

These two examples demonstrate the extremes of a spectrum of possibilities with pros and cons to each in extreme interpretations. The centralized approach permits design criteria development and utility-asset deployment to engender confidence surrounding reliability and economic cost-effectiveness. However, the centralized approach may not be acceptable to some consumers. The agent-based decentralized approach can improve the likelihood of consumer satisfaction, but it may not be possible to develop design and analysis tools that can work in this paradigm with a high degree of confidence or reliability.

Development of smart grid elements, especially the applications that are driven by business processes, is highly dependent upon having standards defined. The lack of an architectural paradigm makes it difficult to describe the business rules, which in turn prevents application development. This logic prevails at the system, substation, feeder, intelligent electronic device (IED), and HAN level. Therefore, establishing a standard smart grid architecture for California is critical. Meeting this goal will require addressing a host of policy and tariff issues that extend well beyond requirements outlined in the state's current net metering, feed-in tariffs, and power purchase agreements (PPAs).

A contrast of California's current grid and the 21st-century smart grid is provided in Table 3.

Table 3. Contrast of past and future grids

20th Century grid	21st Century smart grid
Electromechanical	Digital
Very limited or one-way communications	Two-way communications everywhere
Few, if any, sensors —*Blind* Operation	Monitors and sensors throughout—usage, system status, equipment condition
Limited control over power flows	Pervasive control systems—substation, distribution and feeder automation
Reliability concerns—manual restoration	Adaptive protection, semi-automated restoration and, eventually, self healing
Sub-optimal asset utilization	Asset life and system capacity extensions through condition monitoring and dynamic limits
Stand-alone information systems and applications	Enterprise-level information integration, interoperability, and coordinated automation
Very limited, if any, distributed resources	Large penetrations of distributed, intermittent, and demand-side resources
Carbon-based generation	Carbon limits and green power credits
Emergency decisions by committee and phone	Decision support systems, predictive reliability
Limited price information, static tariff	Full price information, dynamic tariff, demand response
Few customer choices	Many customer choices: value-added services, integrated demand-side automation

Source: KEMA

In this section, a summary of smart grid technologies that are commercially available or under development today is presented. Particular attention has been given to prior and ongoing Energy Commission-sponsored research and the implementation activities by major utilities in the State of California.

Key smart grid elements include the following:

- **Intelligent Electronic Devices:** There is rapid growth and use of these devices in substations and across the grid, which is transforming grid functionality and bringing new advanced automation capabilities. Digital relays are one of the most important classes of IEDs, and, along with special purpose IEDs, are capable of monitoring key conditions of grid assets, including power transformers and switchgear. These IEDs provide detailed information, which support asset performance management, maintenance, and life. They also provide grid condition information, which can detect possible operational modes. This monitoring will help ensure high reliability and optimal performance, while alerting grid operators of conditions that may require maintenance. Distributed renewable generation IED support is currently limited to *interconnection relays,* which provide basic distributed generation (DG) interconnection protection—that is, low voltage ride-through and de-energized circuit detection and

disconnect. These interconnection relays are capable of accepting downloadable settings and control mode-switching. However, they are not consistently deployed in systems that make use of these capabilities today. A survey of digital relays and recloser controls on the market today reveal that several manufacturers have comprehensive product suites available for all existing transmission and distribution (T&D) applications. However, these relays—typically applied to distributed and renewable generation applications—are often limited to the *interconnection* and voltage ride-through functions.

Additionally, many opportunities exist for greater systematic use of advanced voltage regulator and capacitor controls to integrate DG into the grid more holistically.

- **Communications Networks**: Numerous communications services are used to provide the connectivity required to deliver IED services and benefits. The growing use of public wireless and wired networks are making significant in-roads in the smart grid market, while the use of private data networks has mostly commercial applications. California has established ZigBee as standard for HAN devices and integration into advanced metering infrastructure (AMI). ZigBee is also one of the first standards to be embraced by National Institute of Standards and Technology (NIST) for smart grid development.

  Most T&D IEDs are currently internet protocol (IP) addressable; therefore, the actual communications infrastructure used for smart grid may be a localized T&D choice. IP addressable devices are generally compatible with most wide-area communications technologies. While the direct interfaces to the HAN or home may not fully be IP-enabled, these communications are encapsulated and transported by an IP network. Likewise, substation systems are transparent to devices at the IP level. Currently, the public Internet is not utilized for smart grid applications or developments, but could be for some applications, amounting to significant cost savings. In a later section, the research team identifies which smart grid applications are capable of public internet functionality (bandwidth, latency, availability, coverage) and obstacles that must be overcome to utilize the internet, such as cyber security.

- **Application Support Systems**: Along with field advancements, new control room applications are being deployed to support renewable resource functions. These systems perform analytical applications necessary to enable and support reliable, renewable connectivity to the grid and to facilitate potential market operations, enabled by better, timelier data. Planning and operations applications—whether substation or back office-based—do not have specific renewables provisions, other than as inverter-based distributed generation sources. There are two fundamental paradigms in distribution engineering and operations (urban underground secondary networks aside)—radial circuit design/operations and unidirectional power flow. These two paradigms are universal. Commercial applications do not have provisions for considering or optimizing circuits that do not fall under one of those two universal paradigms. Additionally, current circuit design is focused on peak load with off-peak voltage/volt-amperes reactive (VAR) management as a secondary design stage. A new design and operations paradigm will be required, one that embraces bidirectional power flow,

consumer interaction with the grid and its economics, and increased stochastic behavior of loads and distributed resources. Coordinating a wide variety and number of DG protection devices, on a feeder and then dynamically adjusting them to conditions, is beyond any commercial software tools currently available, which has led utilities to limit feeder automation scheme complexity that may be dependent upon these devices.

- **Building Automation and Home Automation Systems**: Commercial building automation systems offer considerable promise in integrating renewable DG with building energy consumption. Major building energy management system (EMS) providers have energy optimization and building DG integration capabilities, but do not yet have grid integration capabilities. However, current building EMS integration with the grid is, at the simplest level, equivalent to thermostat set back.
- **Substation Automation and Communications Systems**: A number of manufacturers offer substation automation and communications' systems that are standards-compliant (International Electrotechnical Commission [IEC] 61850 is the globally accepted standards suite) and field proven in substations around the world. Some of these systems include applications for feeder automation, which are capable of adapting to existing feeder conditions. These systems support typical applications, including fault isolation and restoration, via the intelligent use of sectionalizing equipment, open ties to other feeders, and voltage and volt-amperes reactive (VAR) control. None of these systems have applications available for DG or renewable resources integration. IEC 61850 provides for instantaneous protection coordination signals to occur via the ethernet on substation local area network's (LAN) (fiber) via a special adjunct to IP protocols. However, this practice is accepted in Europe more than the United States.
- **Feeder Automation and Distributed Intelligence**: Several manufacturers have introduced distributed control schemes, embedded in distribution feeder automation devices (reclosers, circuit breakers, switches), that are capable of dynamically determining the best switching steps to isolate and restore circuit segments after a fault. These kinds of devices, coupled with distributed renewable resource communications and intelligence, will contribute to reliable behind-the-meter distributed resources integration. However, none of these devices have features directed at high renewables penetration. In particular, there are no provisions or plans for DG protection to accept *transfer trip* type signals from other protection devices, which can dynamically determine when the DG needs to trip off line or can stay on line.
- **Electricity Storage**: While not a sensing, communications, or control technology, electricity storage, via advanced electrochemistry and other new or improved technologies, has tremendous potential to improve the penetration and success of renewable resources. Energy storage has numerous applications, which ultimately provide grid operations' flexibility, better feeder design and operations, and greater consumer choice, and it holds great promise for non-radial and/or bidirectional power flow. However, these opportunities come with added design and operational complexity. None of the existing smart grid technologies discussed previously,

including IED and back-office applications, currently provides special capabilities for the integration of storage at any level.

- **Vehicle to Grid (V2G)**: Integration of electric vehicles (EV) and pluggable hybrid electric vehicles (PHEV) to grid operations is examined. The research focuses on smart grid technologies that will be required to support V2G applications. V2G is a special demand response (DR) resource in which the total energy during a time period must be provided, but the grid can control the charging demand within that constraint. No automotive manufacturers are currently planning the development of consumer vehicles that discharge electricity back to the grid; therefore, V2G is best categorized as a DR resource, not a storage resource. (It is possible that larger fleet vehicles may be deployed with this capability in the next few years, however.) There are no major developments or pilots underway that explore V2G business processes and applications, besides a few pilot demonstrations that focus on technological feasibility. The Electric Power Research Institute (EPRI) National Electric Transportation Infrastructure Working Council is working on interface standards and the first stage business models for utility to PHEV interactions. [1] This working council is currently addressing basic interconnection standards for charging.[2] At the other end of the spectrum, the IRC (The ISO [Independent System Operator]/RTO [Regional Transmission Organizations] Council) has started an impact assessment of PHEV/EV on the market and system operations, and will then develop a roadmap to establish business processes and system integration. This latter effort will address the wholesale level and not the feeder-level issues of widespread PHEV/EV penetration. While this study is focused on renewables facilitation, the authors note that V2G demand management is considered a key element towards accommodating high renewable resource levels.

Two essential smart grid aspects necessary to facilitate and integrate renewable resources are reliability and market and operations integration. Smart grid technologies should facilitate renewables penetration by easing the reliability problems associated with integrating them into the distribution and transmission grid. Intelligent Electronic Devices (IEDs) and communications will provide visibility; new control systems and communications will provide required controls. Integrated market and operations will make renewables more attractive and thereby increase their penetration. This integration is critical to helping unlock the value of renewable resources.

It is not clear that disparate product development and system integration demonstrations work towards achieving renewable objectives on the transmission and distribution (T&D) system or systems' operational level in a coordinated way. As such, these demonstrations tend to be driven by isolated R&D or product development efforts, rather than by an integrated approach to R&D. This is a typical trend in an emerging market; first-to-market providers attempt to have the rest of the industry adopt their methods as the industry standard.

---

[1] http://et.epri.com/InfrastructureWorkingCouncil.html

The Energy Commission has advanced the cause of standardization of HAN technologies, so consumer devices are expected to have some level of grid integration considerations when they are introduced to the market.

An early study premise holds that data models and business processes for integration are developing slowly, if at all, while communications standards to enable grid integration behind-the-meter resources are evolving. At the T&D level, IED integration communications and data models exist, but the overall business models and operational applications are only beginning to develop. Furthermore, those who are developing do so around existing radial distribution system engineering paradigms and are not considering the future overall smart grid model. At the business model level, the lack of an architectural paradigm is an obstacle to achieving the necessary and potential benefits of smart grid, especially renewables integration. Absent formal consensus on this paradigm, the individual technology firms, resource developers, and utilities pursue different paths that may or may not converge on workable models. The Federal Energy Regulatory Commission (FERC) has recently asked the Independent System Operator-regional Transmission Organization (ISO-RTO) Council (IRC) to conduct a study to develop ISO-aggregator business models and protocols as rapidly as possible. This study will help address the gap in current standards efforts.

Another key study area discusses the integration of s*mart buildings* with smart grid. The smart building community is beginning to think about this integration, and the smart grid community has focused primarily on residential applications, often to the detriment of commercial building smart grid integration. The Galvin Initiative, who has developed microgrid architecture for the integration of building automation, renewable and other distributed generation, and other local systems in a self contained complex, is one group focused on this problem. Another group examining integration needs is *automatedbuildings.com,* which is a publication and working group from the real estate industry- and building automation- consultants and suppliers.

Some of these future smart grid needs must include:

- Marrying smart T&D apparatus and an internet-like intelligence architecture.
- Embodying self-diagnosing and self-healing algorithms.
- Enabling distributed generation, renewable resources, and storage.
- Providing information to consumers and enabling consumer choice.
- Incorporating two-way flow of power and information.
- Processing transactions in a secure environment (in a cyber sense).
- Encompassing pervasive sensing and control capabilities.
- Integrating behind-the-meter intelligence at end devices with consumer and grid IT systems.
- Equipment health monitoring.

- Enhancing operational efficiency of T&D system.
- Meeting regulatory reliability and power quality requirements.
- Reducing significant operation & maintenance (O&M) costs.
- Utilizing both existing and new capital investments more fully.

CHAPTER 3:
Current Status of Smart Grid

This section provides background information on the primary components of California's smart grid.

3.1 Intelligent Electronic Devices—(IEDs)

The following figure displays a diagram of IED systems and components.

Figure 2. Diagram of T&D IED systems and components

Source: KEMA

3.1.1 Definition of Technology

Increasing numbers of utilities utilize situational information about the T&D system that originates from IEDs, including voltages, power and current flows, and increasingly equipment condition. IEDs are digital protective relays that include specialized sensors, such as synchrophasors or equipment condition monitoring devices. Supervisory control and data acquisition (SCADA) remote terminal units (RTUs) are being replaced by integrated IEDs, substation data concentrators and automation systems, and communications processors that utilize modern communication systems and optimize current information. RTUs offer limited data acquisition capabilities of system conditions, based on analog transducers, but cannot provide high-speed data or equipment condition information. RTUs are an example of a legacy technology from a prior era; they communicate via limited serial communications protocols that can trace their roots to leased phone-line communications (still in use in some places). IEDs can accept dynamically updated settings from substation computers or central office systems (indirectly), which means that IEDs can be adapted to the changing conditions of renewable resources. IEDs are also capable of capturing, calculating, and storing additional values, such as asset condition data, fault location and fault records, and harmonic analyses.

IED fault record capture and diagnostics capabilities, for areas where information was not previously available, will help utilities understand how renewables may change system behavior; thereby allowing utilities to respond quickly to issues caused by the intermittency of renewables.

3.1.1.1 Digital Relays

The current protective relays' market is dominated by microprocessor-based relays (with at least 90% of the market share) that use digital signal processing (DSP) mathematics to perform a variety of protection functions. This technology has replaced older electrostatic (solid state discrete component) technology completely and electromechanical (EM)-based protection, except in the replacement market. EM relays are still in use in about 50% of installations.

Digital relays are often used to replace EM relays when the replacement is one-for-one—in simple applications such as feeder overcurrent protection. In such cases, the additional capabilities of the digital relay are usually not used when they interface with a traditional RTU. When one digital relay replaces multiple EM relays, such as with bus protection or transmission line protection, cabinet rewiring is required. Utilities are often reluctant to make this change until an entire substation retrofit is planned.

Digital relays often offer advanced capabilities beyond those available from EM or electrostatic relays, including the ability to monitor asset condition, capture fault records, and other data collection and processing functionality. When coupled with global positioning system (GPS) and precise-time synchronization, digital relays form the basis of synchrophasor systems and wide-area protection.

3.1.1.2 Power Quality IEDs

Power quality is increasingly important for utilities and the industry. There are multifunctional IEDs that are used to monitor and analyze different types of power quality events. Power-quality IEDs include digital fault recorders, sequence of events (SOE) recorders, power-quality recorders/monitors, and disturbance and dynamic swing recorders.

3.1.1.3 Phasor Measurement Units (PMUs)

A phasor measurement unit (PMU), also referred to as a synchrophasor, measures the electrical sinusoid on an electricity grid to determine the phase angle of each monitored location's system health. The development of communications and introduction and availability of a standardized time reference over wide geographic areas by GPS, have laid the foundation for synchrophasor technology. This technology has provided information for system wide monitoring and power system control that previously was not available.[3]

3.1.1.4 Condition Monitoring Devices

Condition monitoring devices allow utilities to adopt modern and more productive maintenance approaches, such as reliability-centered, condition-based, risk-based, and performance-based maintenance (PBM). Transformer condition monitors are the most notable; however, devices that monitor circuit breaker conditions and medium voltage underground cables also exist.

With equipment condition monitoring (ECM), equipment operating parameters are automatically tracked by remote monitoring systems to detect the emergence of abnormal operating conditions. This monitoring allows maintenance personnel to act when needed to improve reliability and extend equipment life.

3.1.2 Current Status of IEDs in California

California's efforts to deploy IEDs are similar to nationwide market trends; digital protective relays dominate the new protective relay market. Southern California Edison (SCE) smart grid activities include the deployment of PMUs and other IEDs. Pacific Gas and Electric Company (PG&E) embarked on a major distribution automation initiative several years ago, which includes the installation of IEDs.

3.1.3 Key Characteristics

To improve substation automation performance, many utilities are replacing electromechanical devices with microprocessor-based IEDs. These new IEDs allow technicians to perform efficient examination of SCADA database variables before they are transferred to the SCADA master. Integration of IEDs with enterprise operations and planning systems has enabled utilities to maximize protective relays' performance, improve system performance, and to perform remote diagnosis and equipment testing.

---

[3] Begovic, M., D. Novosel, and B. Branislav. "Issues Related to the Implementation of Synchrophasor Measurements." Hawaii International Conference on System Sciences, Proceedings of the 41st Annual, Waikoloa, Hawaii, Jan. 7-10, 2008.

In addition, a variety of IEDs are installed at substations for various purposes. For example, monitoring equipment is independent from data acquisition equipment. Traditional substation automation allowed limited data integration and exchange across different devices. The integration of different digital devices, such as monitoring and data collection equipment, into the electricity system is the biggest trend that has occurred over the last few years. The following benefits are from this integration of devices:

- More effective equipment monitoring and maintenance.
- System-wide protective relaying.
- Real-time EMS control.

As IEDs evolve and more utilities transition to these devices, the demand for substation automation and integration is expected to accelerate in the near term. [4] Table 4 summarizes common IEDs in use today for system protection.

Table 4. Digital protection IEDs

Asset	IEDs in current market
Buswork	Bus differential, under/over voltage
Circuit breakers	Breaker failure, bay control, bus differential, programmable automation, revenue and power-quality metering
Distributed generation	DG relay, recloser controls
Distribution feeders	Bay control, overcurrent/reclosing, feeder protection, Arc-flash detection
Generators	Synchrophasor, Multi-function protection, under-frequency
Motors	Motor protection, overcurrent
Power transformers	Transformer differential, current differential, overcurrent transformer monitor
Reclosers	Recloser controls, multi-recloser coordination
Shunt capacitor banks	Capacitor monitoring and control
Storage	DG relay
Transmission lines	Distance relaying, line differential
Voltage regulators	Voltage regulator control
Wind farm	DG relay, under-frequency, multi-function protection

Source: KEMA

3.1.4 Market Data

Substation automation systems have undergone a rapid change since the advent of microprocessor-based IEDs with improved capacity and communication speed to and within

[4] *North American Substation Integration and Automation Systems Market*. PDF. Page 73, originally published by Frost & Sullivan, 2005.

the substation. The deployment of microprocessor-based IEDs and communication technologies within substations provides utilities the ability to meet challenges in a way they were unable to do before.

There are no longer only RTUs that have an enormous amount of wiring in the substation; instead, there are now IEDs that have the same functionality as RTUs. Additionally, RTUs are evolving and act as communication gateways within the substation. They talk to the different devices and retrieve information from these other devices. [5]

The following table displays projected utility spending levels by device for 2008.

Table 5. Projected spending for 2008 (in $ million) [6]

Devices for projected utility spending in 2008	($ millions)	Percentage
Protective Relays	**297**	**100%**
Digital	262	88%
Electro-Mechanical	35	12%
Protective Relay Detail	**297**	**100%**
Line Current Differential	19	6%
Line Distance	78	26%
Transformer, Reactor	36	12%
Breaker Failure	11	4%
Bus Relay	20	7%
Feeder Overcurrent	39	13%
Generator Relay	20	7%
Motor Protection	38	13%
Voltage Protection	17	6%
Overcurrent	14	5%
Trip Relays (LV/MV)	5	2%
Substation Measurement Products	**128**	**100%**
Phasor Measurement Units (PMUs)	12	9%
Digital Fault Recording	24	19%
Sequence of Events Recorders	14	11%
Power Quality Recorders/Monitors	20	16%
Revenue Class Metering	21	16%
Disturbance and dynamic swing recorders	15	12%
Transducers	22	17%

[5] North American Substation Integration and Automation Systems Market.

[6] Newton Evans. *2008 Siemens PTD Market Sizing Study,* December 2007.

Devices for projected utility spending in 2008	($ millions)	Percentage
Substation Automation	**398.7**	**100%**
Substation A & I Services	162	41%
RTU/PLC/Bay Controller	50	13%
Substation Gateways	21	5%
Synchronizing IEDs	3.2	1%
Phasor Data Concentrator Units	4.5	1%
Substation Networking	75	19%
Power Line Carrier/Teleprotection	26	7%
Transformer/CB Monitoring	23.5	6%
Time Code Receiver/GPS	7.5	2%
Hardened Substation Computers	26	7%

Source: KEMA

3.1.4.1 Market Trends

Industry practices indicate that IEDs, particularly relays, reclosers, and condition monitors, will be deployed in new and existing stations at steady or fast rates. IED manufacturers and models are standardized, which provides a stable operating and maintenance environment that is familiar to engineers, operators, and technicians. Similarly, interfaces to information systems are being standardized using communications standards (IEEE 61850) and common information models (CIM), which makes them easier to maintain, operating conditions can be standardized, and schemes are easier to implement. Finally, operational and non-operational data formats are becoming standardized to simplify storage, maintenance, and analysis requirements. [7] While IEC 61850 is widely accepted as a global standard, most manufacturers support it through data conversion layers. These manufacturers may be reluctant to yield proprietary functionality, which gives them a competitive uniqueness in the marketplace; and thus do not build native IEC 61850 products.

3.1.4.2 Digital Relays

Digital protective relays have won widespread market acceptance. It is estimated that approximately 50% of installed protective relays are digital and over 90% of new protective relays purchased are digital. Successful implementation of substation and feeder automation is dependent upon the presence of digital relays.

According to a recent Newton-Evans survey of North American utilities, 44% of survey respondents indicated that they already apply digital protection signaling for their distance relays. As of mid-2004, another 15% planned to apply digital protection signaling, 11% were uncertain, and 30% had no digital implementation plans. Additionally, investor-owned utilities (IOU) were likely to be applying digital signaling techniques for distance relays, while public power, cooperative, and Canadian utilities lagged behind or had no interest in applying digital protection signaling.

[7] 2006 UTC SUBSTATION.PDF

While digital relays have become the norm in new construction, and are gradually replacing older technologies in existing installations, they are often not fully utilized. Digital relays are capable of providing a great deal of non-operational data about protected equipments' condition, detailed fault records (as a time signal), and other data, such as operations counts. This data is accessible only if the relay is connected over a serial or Ethernet port to a communications line or communications processor. Typically, the utility installs the digital relay, but not the substation computer and/or communications to fully utilize its capabilities.

3.1.4.3 Power Quality IEDs

According to a Newton-Evans survey, more than 25% of utilities rely exclusively on digital relays to provide disturbance (fault) recording and SOE recording' another 50% indicated that they were moving towards digital relay reliance. IOU and public power utilities continue to rely on discrete fault and SOE recording units, but plan to increase their reliance on digital relays for these functions. Cooperatives and Canadian respondents already use or plan to use digital relays in place of disturbance recorders and SOE recorders.

There is also a correlation between utility size and continuing use of digital fault and SOE recorders. Only one of 32 utilities (serving one-half million or more customers) was exclusively utilizing digital relays to serve fault recording and SOE functions. However, two-thirds of the respondents in this group indicated movement towards exclusive digital reliance. [8]

3.1.4.4 PMUs

One observed market trend is the integration of PMUs with digital relays. For example, American Electric Power, one of the nation's largest utilities, is transferring all PMU functions to relay-based synchrophasor measurements. Potential applications of fast measurement systems, such as PMUs, are unlimited. This new technology is currently undergoing field testing as a monitoring system, though its potential for monitoring and real-time control of power system dynamics is largely untapped.

The utility industry has only recently undertaken large-scale deployment projects, such as the North American Synchrophasor Initiative (NASPI). The use of different computational techniques for phasor measurements within the same network of PMUs has the potential of creating conflicting situations. The success of large-scale deployment will depend on ensuring interoperability and consistent PMU performance across the system.

3.1.4.5 Monitoring Sensors

Many electric utilities have introduced equipment condition monitoring (ECM) as a stand-alone application to maintain electric equipment in optimal operating condition while minimizing service interruptions. With ECM, equipment operating parameters are automatically tracked to detect the emergence of operating anomalies, allowing utilities to act when needed to improve the reliability of and extend equipment life. Substation Automation (SA) and integration programs improve upon the effectiveness of ECM by leveraging the existing investments in communications, IEDs, and smart relays. Utilities cost-effectively and continuously monitor

---

[8] *Relay* 2004 Vol 1. North American Report. Page 49

system and equipment performance by existing data and infrastructure. At the same time, company wide data integration provides opportunities for asset fleets/groups performance monitoring and implementation of new, powerful diagnostic methodologies, based on tracking performance of like models in similar operating conditions.

3.1.4.6 Market Barriers

Key market barriers preventing widespread implementation of this technology include regulatory uncertainty, constrained utility budgets, limited end-user awareness, and slow overall United States economic growth. [9] The following table outlines the top industry challenges to the substation integration and automation systems' market as well as the outlook of these challenges in future.

Table 6. Top barriers for increased substation automation and integration[10]

Challenge	1-2 Years	3-4 Years	5-7 Years
Limited access to non-operational data curbs market potential	High	Medium	Low
Absence of common standards leading to confusion among end-users	High	Low	Low
Increasing amount of data forces vendors to develop high-speed, reliable, robust communication channels	Medium	Medium	Medium
Utility tight budget constraints force utilities to design integration architecture to match utility needs with optimal costs	Medium	Low	Low
System integrator/engineering firms create additional market competition	Medium	Low	Low
Issues relating to commissioning inhibit adoption of substation automation	Low	Low	Low
Lack of substation computers and communications for the non-operational data	Medium	Low	Low
No widely available equipment failure databases to support development of condition assessment applications	Medium	Low	Low

Source: KEMA

IEDs do not have separate ports—a particular barrier—which prevents utilities from retrieving operational data from one port and non-operational data from the other. As a result, each department within the utility has to connect to the IEDs for specific functions. For example, the maintenance department connects to the IED to perform maintenance functions, while the

[9] North American Substation Integration and Automation Systems Market.pdf. PDF Page 23

[10] North American Substation Integration and Automation Systems Market.pdf. PDF Page 28

protection department connects to the IED to perform monitoring functions. Unfortunately, IEDs have a limited number of ports, which further complicates the process.

3.1.4.7 Digital Relays

Digital relays are now widely implemented. Most of the previous market barriers related to IED communication protocol standardization have been overcome.

3.1.4.8 Power Quality IEDs

Timely, effective acquisition and analysis of fault event data from digital fault recorders (DFRs), sequence of event recorders (SERs), and protective relay IEDs are critical to fault event analysis. Time-synchronized recording of faults, swings, and disturbances is needed to conform to emerging or published North American Electric Reliability Corporation (NERC) and East Central Area Reliability (ECAR) requirements for disturbance monitoring. These records are also required to evaluate protective relaying and control systems performance, and the power apparatus itself for future power system events.

3.1.4.9 PMUs

There are implementation limitations for efficient real-time protection and control schemes. The lack of PMU applications at the control center, to process collected data, is a key PMU market barrier. Additionally, existing communication networks are insufficient to support the data.

Most current control centers were not designed to process state information at the rates needed for real-time control of power system dynamics involving transient disturbances. New architectures, such as massively parallel and distributed computing environments, provide substantial processing performance increases. [11]

3.1.4.10 Condition Monitoring Devices

Similar to the issues facing other IED technologies, condition monitoring devices are constrained by the lack of data standardization and the ability to integrate into existing asset management systems.

3.1.4.11 Existing Players in This Space

The digital/numeric relay was introduced in the early 1980s, with AREVA, ABB, and Schweitzer Engineering Laboratories (SEL) making early market advances in the arena. The arena has become crowded today with many manufacturers; however, SEL is the market leader. While the suppliers of IEDs are mostly mature companies, there are many small meter manufacturers making unique devices, especially for motor protection and power quality. Many manufacturers often cater to niche or regional markets, and offer relays as part of a larger product mix.

The estimated market share of the major suppliers, based on 2007 activity level, is displayed in the figure below. As displayed, SEL, Inc., and General Electric (GE) are the market leaders in

---

[11] Begovic, M., D. Novosel, and B. Branislav. "Issues Related to the Implementation of Synchrophasor Measurements." Hawaii International Conference on System Sciences, Proceedings of the 41st Annual, Waikoloa, Hawaii, Jan. 7-10, 2008.

digital relays and PMUs. GE also has a strong presence in the condition monitoring device market. Recent anecdotal evidence suggests, however, that SEL, Inc., may hold a larger percentage of the IED market than the below figure suggests.

For power-quality IEDs, the leading suppliers are Qualitrol, USI, and Mehta, who combined hold over half of this market. They are included in the figure below, as part of the "Other" category.

Figure 3. Estimated market share

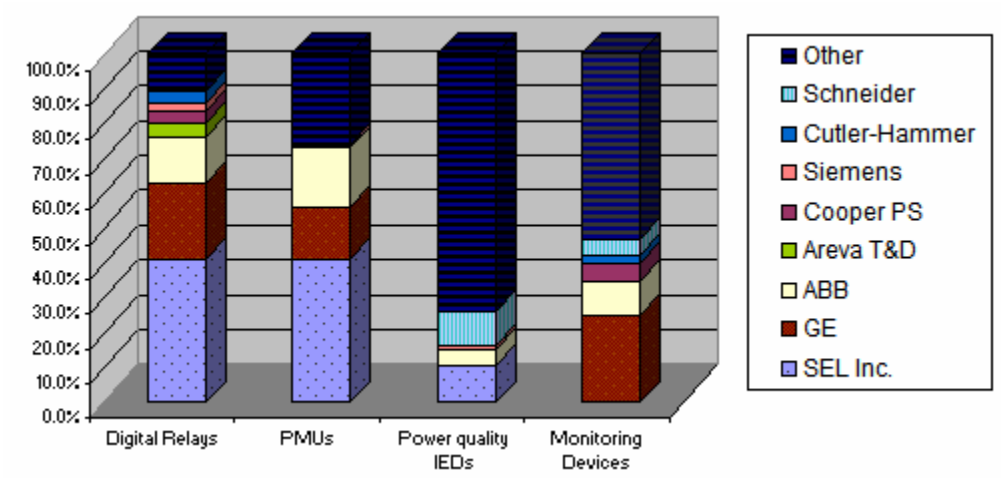

Source: 2008 Siemens PTD, Newton Evans research

A survey of IED manufacturer product offerings shows that there are two IED products offered for DG and renewable support. At the grid level, the *interconnection protection* products offer basic transmission grid interconnect facilities—over-current protection, disconnect on low-voltage, and low-voltage ride through. At the DG level, the *disconnection* protection provides mandated disconnect upon detection that the grid is not energized.

Most of these products use identical hardware/firmware platforms, which provide a basis for a manufacturer's product family to be programmed to perform more sophisticated tasks and accept dynamic settings. For example, devices can be programmed with adaptive settings or advanced protection and control schemes and integrated with other devices on the same circuit (provided high-speed communications was available). However, the principles and analytics to do this are not available or under development, as will be discussed in the sections on feeder automation and analytics.

3.2 Communications Networks

Figure 4. Example of communication network

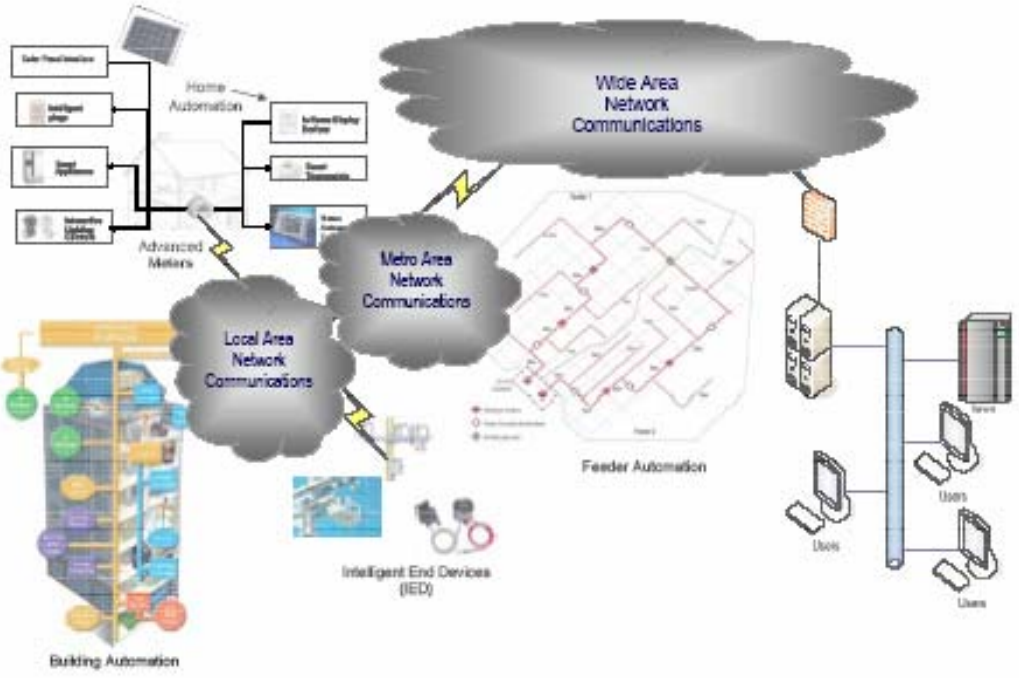

Source: KEMA

3.2.1 Definition of Technology

The communication infrastructure for smart grid includes networks that relay digital data between the utility and consumers. A Local Area Network (LAN) is used to transmit digital usage readings from on-site Meter Interface Units (MIUs) to collectors. The collectors then store usage data from multiple meter points and transmit it to the utility through a Wide Area Network (WAN).

3.2.2 Currents Status of Communication Networks in California

California utilities predominantly favor wireless radio frequency mesh networks as their local area communications and public wireless networks as their wide area communications. All of the major utilities are or planning to include HANs as part of their smart grid implementation. The ZigBee™ wireless communications protocol is emerging as the standard protocol for HAN-enabled meters and devices.

Table 7. Summary of communications technologies

	Local area networks (LAN)	Wide area networks (WAN)	Home area networks (HAN)
PG&E	PLC and RF Mesh	Common carrier networks and Ethernet	Wireless (ZigBee)
SCE	RF Mesh	Public internet standards-based wireless network	Wireless (ZigBee)
SDG&E	RF Mesh	Public internet standards-based wireless network	Wireless (ZigBee)
LADWP	RF Mesh	Wireless public networks	Wireless (ZigBee)
SMUD	TBD	TBD	TBD

Source: KEMA

3.2.2.1 Pacific Gas and Electric (PG&E)

AMI: For LAN, PG&E is currently using Aclara's radio frequency (RF) technology for its gas meters and power line carrier (PLC) technology for its electric meters. PG&E is upgrading the PLC system to a radio frequency (RF)-mesh technology provided by Silver Spring Networks, which is scheduled to be completed by 2012. For WAN, Silver Spring Networks uses common carrier networks Code Division Multiple Access (CDMA) and Global System for Mobile-based (GSM), and Ethernet.

HAN: PG&E is currently deploying 5 million ZigBee-enabled meters. It is working with start-ups and big companies to develop in-home display and control devices.

3.2.2.2 Southern California Edison (SCE)

AMI: SCE deploys Itron's OpenWay meters and communications system as part of SCE's Edison *SmartConnect* metering program. OpenWay uses mesh network RF technology for local area communications and any Internet standards-based network for wide-area communications. This combination provides a highly scalable and robust network infrastructure. In particular, the Itron design is built so that the "LAN to Cell Relay to WAN" portion of the system can be vendor-agnostic, so that the full functionality of the OpenWay meter can be leveraged across any architecture (Smart Grid News, April 2008[12]).

HAN: SCE is deploying Itron's OpenWay meters that use wireless ZigBee™ technology to provide real-time communications to energy management devices.

3.2.2.3 San Diego Gas & Electric (SDG&E)

AMI: Similar to SCE, SDG&E selected Itron's OpenWay meters and communications system. OpenWay uses mesh network RF technology for local area communications and any Internet standards-based network for the wide-area communications.

[12] Gunther, Erich. "Itron's OpenWay®: Utilities can benefit from its Standards-Based Approach." *Smart Grid News*, April 9, 2008.

HAN: OpenWay meters use ZigBee home area network connectivity.

3.2.2.4 Department of Water and Power, City of Los Angeles (LADWP)

AMI: LADWP will implement open, non-proprietary communications with easily interchangeable components throughout its AMI system. To minimize the impact of a communication technology change, LADWP will install a scalable RF-mesh and IP-backbone network using a public communication network. For 25,000 medium and large commercial and industrial customers, LADWP will implement wireless (public network) two-way communications meters. This will also applies to 64,000 residential customers whose monthly energy consumption is over 1,200 kilowatt-hours (kWh).

For the rest of their small commercial and residential customers, LADWP will install walk-by or drive-by RF one-way communication meters that can be upgraded to fixed network or RF-mesh network configurations. (LADWP presentation, May 2008[13])

HAN: LADWP will implement wireless two-way communications meters that are equipped with ZigBee protocols to monitor and control home electric devices for 64,000 residential customers with monthly energy consumption over 1,200 kWh. A new device should have *plug and play* capability that is to be able to register itself upon installation and begin to communicate with neighboring systems immediately.

3.2.2.5 Sacramento Municipal Utility District (SMUD)

AMI: SMUD has not selected an AMI system; however, SMUD plans to select a system that has a robust and scalable network that can be leveraged for future smart grid applications.

HAN: SMUD has not selected a HAN communications technology yet; however, all residential and commercial customers should have two-way interval meters with HAN capabilities.

In January 2009, SMUD selected Plexus Research, Inc., to provide consulting services supporting their AMI procurement and implementation. Under the three-year project, it will also assess the value of future smart grid applications for the AMI system.

3.2.3 Key Characteristics

The key characteristics of communication networks are outlined below:

- **Throughput**: Level of information flow that can be handled by the communications network. This will determine maximum number of devices, latency of information retrieval and frequency of polling.
- **Coverage**: Within an architecture design, the number of points within a given area that can be reached. This will define the number of repeaters or collectors required to operate successfully.

[13] Department of Water and Power, City of Los Angeles. "Advanced Metering Infrastructure / Smart Grid Project". Presented at the California Energy Commission Advanced Metering Infrastructure workshop, May 27, 2008.

- **Obsolescence**: The maturity of a given technology and resilience to changes, also defines the stage of development.
- **Reliability**: A measure of dependability of a given technology approach to repeatedly and consistently operate at a desired performance level.
- **Scalability**: Ability to grow with functionality (more features); with growth (additional points) and ancillary devices (sensors).
- **Functionality**: Relative indictor of completeness of solution to provide desired outcomes.

3.2.3.1 Types of Communication Technologies

The following communication technologies are examined in this report:

- **Point to Point (P2P) Network**: These networks have gained increasing penetration with utilities serving a wide range of topological and density situations. The system's ability to gain high coverage over a small set of installed sites is a key factor for P2P's widespread use. However, powered mesh networks are more popular in urban locations.
- **Mesh Network**: Mesh networks are the most prevalent with AMI and smart grid applications, where device density and conditions permit. Overall penetration of mesh networks within the utility market is still emerging, but is rapidly gaining wider acceptance. This trend may be an extension of earlier deployments of mesh networks for distribution automation.
- **Broadband Over Power Line (BPL)**: Early hopes for BPL were great; however, technical issues surfaced and infrastructure build-out costs increased. Many of these systems that envisioned BPL to the home have not been realized. Additionally, the business challenges of offering commercial services, such as ISP, have derailed many of these systems, although, there is interest in using BPL as a backhaul network. Due to high BPL design and implementation costs, this technology tends to be used only for Metro WAN solutions. Some municipal organizations continue to explore BPL, since additional services can be provided over the network, such as video.
- **Medium Speed Over Power Line Carrier (PLC)**: The penetration of PLC by utilities is medium to low. PLC's primary use has been for remote Automatic Meter Reading (AMR).This technology supports bidirectional AMI communications; however, the bandwidth required to support this application limits its functionality.
- **Common Carrier Wireless WAN**: According to information from the Cellular Telephone Industry Association, current cellular phone penetration is approximately 84% of the population. However, with the introduction of Machine-to-Machine (M2M) applications, such as AMI and smart grid, this number could potentially reach 500 million end devices (concentrators and RTUs), though security and performance assurance continue to be key concerns. Many utilities use cellular data services to

augment their existing infrastructures as more move towards communication consolidation and use of common carrier networks. AMI and mobile workforces are among the leading areas that drive this trend.

- **Common Carrier Metro Area Network (MAN)**: There is a growing trend to use wireless data services to bring connectivity to a larger geographic area. Two major offerings in this area are Wi-Fi and WiMax. Although the specific characteristics of these technologies vary, they both offer a wider area of coverage than a traditional LAN. As utilities look for higher speeds and greater coverage, WiMax is gaining more interest. A MAN network provides the means to support backhaul and direct connections, as demonstrated by HydroOne.

3.2.3.2 Links to Smart Grid

Smart grid communications are usually deployed as part of a utility's AMI efforts.

3.2.3.3 Contribution to Renewable Technologies

These communications networks can extend control and monitoring access to many renewable resources. This allows effective utility distribution network management and dispatch.

3.2.4 Market Data

This section identifies market trends and risk factors associated with the different types of communication technologies discussed in this report.

- **Point to Point (P2P) Network:** A key risk associated with licensed P2P networks is the ability to handle traffic levels present under specific utility conditions. A licensed network is subject to lower interference risks; though there is concern over traffic and congestion issues. P2P's ability to cover a large geographic territory with a single approach has generated great interest. Similarly, licensed frequency usage offers a level of assurance that these systems will not suffer from interference.

- **Mesh Network**: Mesh network key risk factors are lack of common platform standards, potential peak period congestion (such as an outage), and the potential bandwidth limitations for many critical applications. Other risk factors surround decisions over a meter-centric implementation versus a communications-centric application.

- **Broadband Over Power Line (BPL)**: Although BPL offers key bandwidth and speed advantages, there are some risks associated with using power line for communications, including include the need for tight coordination with distribution design and the operational uncertainty with hard line faults (line breaks). Additionally, there is some risk associated with equipment installation by a third party.

- **Medium Speed Over Power Line Carrier (PLC)**: A risk associated with power-distribution network usage is connectivity reliability for communications; line breaks or network reconductoring can interrupt service. Likewise, the use of switches and loop circuits limit functionality, and there is a limit to the speed that is physically constrained in systems that operate over feeds.

- **Common Carrier Wireless WAN**: Leading WAN risk factors include security, service availability, congestion, and service performance. The common-use nature and evolving technology innovations in WAN networks are key risk assessment factors. Growing consumer use can create congestion and blockages. Security is improving, but is a key concern. The quality of services and message prioritization are growing areas of need.
- **Common Carrier Metropolitan Area Network (MAN)**: Consumer use and demand for coverage and bandwidth are major risk factors in MAN networks. These can be mitigated with service-level contracts and/or use with a non-public configuration—Wi-Fi uses unlicensed frequency spectrum, and WiMax uses licensed bands.

3.2.4.1 Technology Comparisons

The key characteristics of these different communication technologies can be summarized as follows:

- Point to Point (P2P) Network:
  - Increases capacity by segmenting channels and improved compression.
  - Uses local meshing to link to other devices.
  - Supports up/down link and premise communications (HAN) through multi-purpose devices.
  - Embeds communication modules in more end points.
- Mesh Network:
  - Uses universal TCP/IP addressing standards (IPv6) for higher speeds.
  - Has increased embedded security and encryption.
  - Have improved network management systems and device diagnostics.
  - Allows one-to-many multicasting and seed distribution (used for firmware downloading).
  - Has direct connection to end devices (rather than gateway).
- Broadband Over Power Line (BPL):
  - Focuses on medium-voltage distribution for backhaul.
  - Provides distribution end-device development for direct connection.
  - Uses network for video and other high-speed applications.
  - Embeds communication modules in more end points.
- Medium Speed Over Power Line Carrier (PLC):
  - Increased compression increases effective bandwidth.

- Provides improved resilience to cyber threats through security layering.
- Allows migration to wider range of grid applications (Cooper).

- Common Carrier Wireless WAN:
  - Advances offer higher throughput speeds and lower equipment costs.
  - Data services are overtaking voice services.
  - More devices, e.g., iPhone, create higher bandwidth and capacity demand.
  - Security improvements enable better WAN connections.
- Common Carrier MAN:
  - Increasing coverage of WiMax.
  - More products focused on mobile applications.

3.2.4.2 Technology Descriptions

The main types of LAN deployment are as follows:

- **Point to Point (P2P) Network** uses an antenna array that provides direct connection to locations. The operating frequencies tend to be lower (450 to 900 megahertz band) and operate at a higher power level through the use of multiple overlapping antennae enabling devices to communicate through different paths. Often different channels are provided so that communications can be optimized. The span of range for a given system can be 10-15 miles and may support hundreds of thousands of end devices.

Figure 5. Typical point to point network

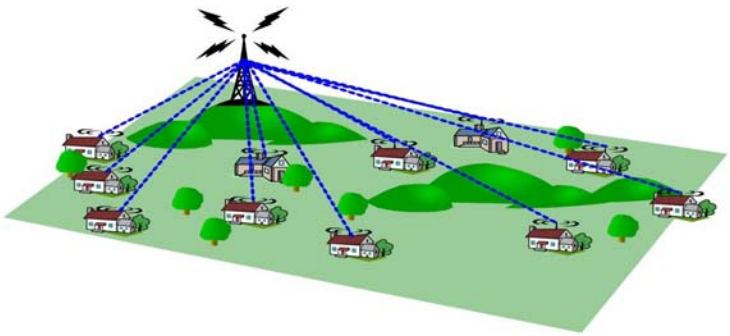

Source: KEMA

- **A Mesh Network** is a repeater network where each module repeats or relays the information from other nodes and relies, at its core, on the deployment of smart devices that have the ability to relay communications from peer units. The elements interact so that a self-configuring and self-healing network forms. A collector or *take-out* point is used to link the communications to other elements. The network requires sufficient den*sity to* form the mesh; however, this also can be a drawback since congestion and routing need to be mana*ged to e*nsure adequate throughput.

Figure 6. Mesh network

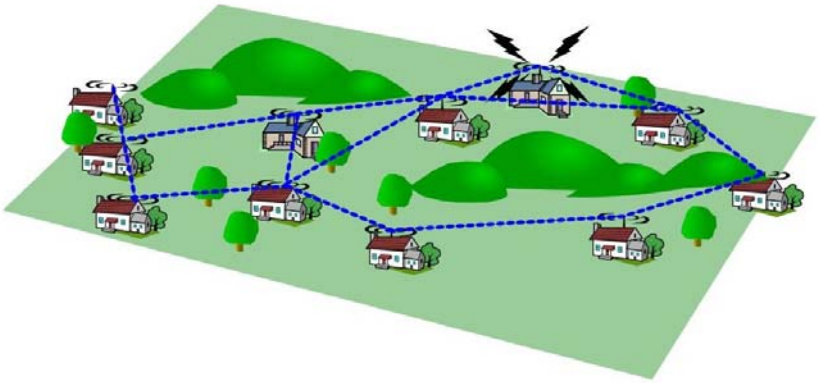

Source: KEMA

- A **Broadband Over Power Line (BPL)** system leverages the existing electrical distribution network to deliver communication service over the exiting powered infrastructure. The use of high frequency signals has distance and interference issues; however, the use of repeaters and bypass devices—to overcome the transformers, switches, and other distribution characteristics—requires significant investment in network components.

Figure 7. Broadband over power line

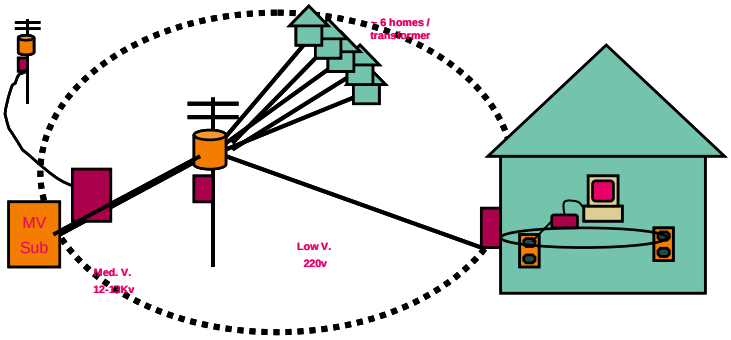

Source: KEMA

- **Medium Speed Over Power Line Carrier (PLC)** technique uses the existing low-voltage distribution network for communications. One implementation uses a technique whereby it modulates the voltage and current waveforms. In these systems, creating a distortion at the zero crossing allows devices to interact with equipment at the substation without conditioning or bypassing secondary transformers. In other techniques, the wires are used as media for medium frequency transport. These systems require conditioning and bypass of signal blocking elements.

Figure 8. Medium speed over power line (PLC)

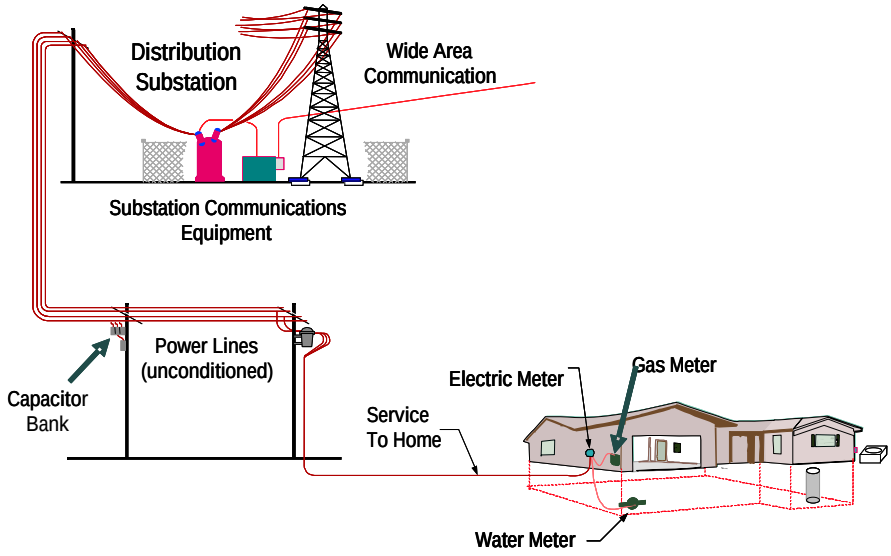

Source: KEMA

There are two main types of WAN deployment: wireless public carriers or wired. Wireless public carriers can leverage the global system for mobile use; standard wired options include fiber ring or substation delivery.

- **Common Carrier Wireless WAN**: Wireless voice and data services are currently being provided by major common carriers, such as Verizon, AT&T, T-Mobile, and Sprint. These cellular-based networks are increasing in speed and improving in coverage. Costs continue to decrease as more and more subscribers embrace wireless access to Web services and other information sources. This technology has rapidly evolved and has become a major source of remote access and data mobility.

Figure 9. Common carrier wireless

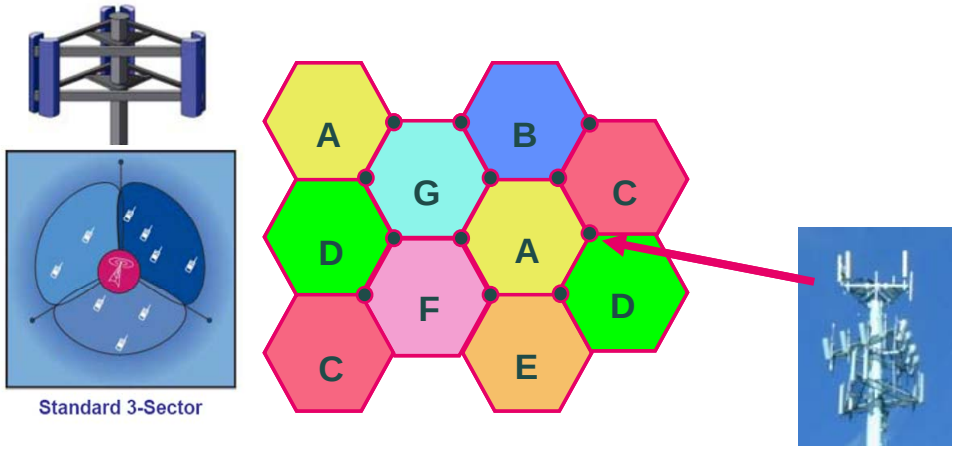

Source: KEMA

Another wireless option is Common Carrier Wireless MAN.

- **Common Carrier MAN**: There is a growing trend to use wireless data services to bring connectivity to a larger geographic area. Two of the major offerings in this area include Wi-Fi and WiMax. Although the specific characteristics of these technologies vary, they both can offer a relatively wider area of coverage than a LAN.

Figure 10. WiMax network

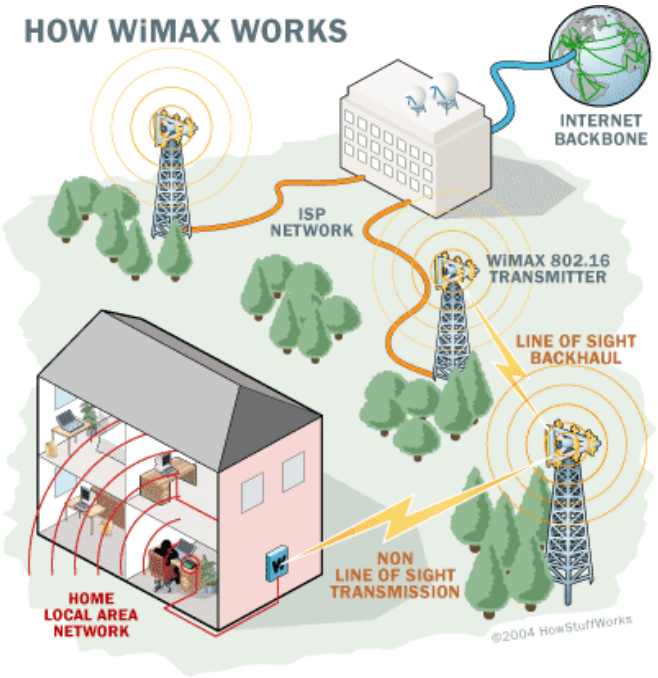

Source: KEMA

3.2.4.3 Types of Networks and Network Providers

The research team gathered information about various network services and service providers and has provided it below:

- **P2P Network**: There are only a few providers offering this technology; most are stable firms. There appears to be a movement toward lower powered devices. Possible substitute technologies surface, such as SMS, but these services are limited in the utility market due to service quality and security issues.

  P2P Providers: Sensus (AMDS), Aclara (Hexagram STAR)' Tantalus' Itron FN2

- **Mesh Network**: There are numerous Mesh technology providers. The widespread availability of WAN services, including fiber and wireless cellular data systems, enable easy Mesh-solution implementation. In spite of the numerous providers, most systems operate with proprietary and non-interoperable protocols, especially at the Medium Access Control (MAC) layer.

  Mesh Network Providers: Itron OpenWay, L+G Utilinet, Elster, SilverSpring Networks, Trilliant, EKA Systems, SmartSync.

- **BPL**: There are a limited number of BPL providers, each of whom has similar technologies for network connections. There are several key equipment providers supplying the industry, which could be a consolidation and end-point delivery collapse leading to fewer total system providers.

  BPL Providers: Current, Ambient, Corinex

- **Medium Speed Over PLC:** There are a limited number of PLC providers, each of whom offers unique proprietary products. There is little or no interoperability.

  Medium Speed Over PLC Providers: Aclara, Echelon, Cannon

- **Common Carrier Wireless WAN:** In the United States, there are four major cellular providers. AT&T Wireless and T-Mobile operate system compatible with the GSM standard. Verizon operates with the CDMA standards as does most of the Sprint Network. Sprint still maintains Nextel's iDen network and is a leader in providing WiMax services. There are a number of other carriers, most of whom are regional and have roaming agreements with the major carriers.

  Common Carrier Wireless WAN Carriers and Providers: Carriers include: AT&T wireless, Verizon Wireless, T-Mobile, Sprint. Equipment providers include: Qualcom, Sierra Wireless, and Motorola.

- **Common Carrier MAN:** The leading Wi-Fi provider is Tropos; the leading WiMax provider is Sprint. Clearwire provides strong competition to Sprint for WiMax services.

3.3 Application Support Systems

3.3.1 Definition of Technology

Applications support systems refer to software applications deployed in the control room and engineering suites. Existing software applications are capable of performing routine functions, such as network analysis, outage management, work management, network planning, and asset management. They are considered mature in an operating environment where renewable resource penetration is low. As more renewable resources are deployed, advances in software applications will be needed to accommodate the new operating environment. On the one hand, existing applications are expected to evolve in response to the presence of renewable resources and possible distribution-network design changes (e.g., from radial to mesh). On the other hand, renewable-specific applications will be needed to cater to renewable resources which are more inconsistent and variable than conventional resources. Renewable-specific applications will need to include renewable forecasting and scheduling software; power plant management software, for solar and wind farms; and network planning and analysis software for feeder unbalanced load flow, short circuit calculations, harmonic analysis, and transformer load management. The use and requirements of these applications will change as a result of high renewables penetration.

3.3.2 Current Status of Application Support Systems in California

California utilities are presumed to be using standard commercial products for planning and engineering applications—Power Factory, PSSE, DigSilent, CYME. All of the utilities have one of the major outage management systems installed—Oracle Centricity, GE Power On, ABB CADOPS. At the writing of this report, the authors do not believe that any of the utilities have advanced distribution management system (DMS) functions, such as online feeder load flow, in operation. The authors also do not believe that any of the utilities have unique applications in service to address the high renewables' penetrations as described in this report.

3.3.3 Key Characteristic of the Technology in Its Role in Smart Grid

Renewable resource presence on distribution networks poses challenges to their operation.[14] Some challenges can be mitigated by redesigning circuits; however, intelligent operation is possible only by deploying suitable applications-support systems.

The presence of additional sources on the network presents a challenge to voltage control. Traditionally, distribution network voltage control is performed at the source (i.e., adjusting tap-changing transformers at the substation) and/or at specific points along the feeder (i.e., capacitors). The goal of the voltage control is to keep the end-use voltage within an acceptable range. Control algorithms are based on the assumption that there are no additional power sources on the feeder and thus are simple and rely on local measurements. With a smart grid, it is possible to have a more intelligent and flexible voltage control scheme within the distribution

[14] Knazkins, V. *Stability of Power Systems with Large Amounts of Distributed Generation*. Ph.D. Thesis, Royal Institute of Technology (KTH). Sweden, 2004.

system. Sensors measure voltage at different points in the network and communicate data to a substation computer or central dispatch. The tap-changer setting at the substation could be dynamically adjusted according to the conditions observed by the sensors as an extension of existing control algorithms. If the renewable resource has the capability of dynamically changing the power factor (thus can control the voltage at the point of coupling), more sophisticated control algorithms are needed to avoid *voltage hunting*. Such advanced controls are needed to coordinate between existing control means (i.e., tap changer at substation and capacitors along the feeder) and new means (i.e., renewable resources).

If the utility is to rely on renewable resources to control voltage in the distribution network, how much should the network operator pay the renewable-resource owner for the voltage-control service? This issue is similar to ancillary services in bulk-power systems where applications have been developed and are in use.

Islanding is another major issue. Islanding occurs when the renewable-resource site and/or a portion of the distribution network disconnect and operate separately from the rest of the utility system. The formation of an unintentional island is a problem because of: personnel safety—line crews might work on a section of line that they believed was de-energized; public safety—islanded generators may energize downed conductors within public reach; and equipment damage or power-quality disturbances if reclosing is performed while out-of-phase.

Currently, protection algorithms are available and are locally based. They can handle most but not all islanding situations because of voltage and frequency relay use. An alarm is triggered only when the frequency or voltage falls outside a dead-band; advanced monitoring algorithms can help narrow this dead-band. For example, whenever an island is formed, the related pair of PMUs can help the distribution-network operator detect a slight drift in synchronism between the island and the rest of the network[15].

Feeder-load flow calculates the currents/power flows and voltages on the feeder. Always done for peak-load conditions and often for low load when voltages may rise, the feeder load flow in the presence of renewables considers the peak and low renewables generation as well as the generic problem of sources out on the feeder. Renewables and behind-the-meter storage together reduce consumer load most of the time. The feeder-load flow must deal with the potential peak load caused by a technical or weather-related failure of renewable resources at peak-load conditions, including the capability to conduct unbalanced feeder-load flows in real- or near real-time.

Short-circuit calculations are particularly affected as additional resources on the feeder contribute to *downstream* short-circuit duty. Typically, these calculations are not designed to address this problem; and calculations vary considerably based on on-line resource capacities at a given time. This absence demonstrates the need for a utility to have good customer-level input data about renewables. While customers must provide this information when initially having

[15] Phasor Measurement Application Study. Energy Commission study by KEMA, 2007.

two-way metering installed, there is no current protocol that the utility is informed when customers subsequently add capacity.

It may occur in the future that distribution operations will require a type of feeder-state estimation that is capable of inferring renewables' presence and renewables production as part of an on-line feeder analysis. In addition, short circuit could be used in adaptively setting protection and switching settings.

Transformer load management is an application that uses meter data and load profiling to compute the peak load on a distribution transformer and support the engineering decision to upgrade or replace the transformer. In their most sophisticated state, transformer load management programs take into account ambient temperature and the transformer's ability to shed heat overnight. The presence of renewable resources at individual consumer locations invalidates load profiling in this process, which requires the use of consumer-specific hourly metered load and renewables forecasts.

Harmonic analysis is used in interconnection studies and required for inverter-based resources. The presence of a large penetration of renewable resources on the distribution circuit complicates accurate load profiling at a time it is increasingly important to be accurate. A question of whether the harmonics caused by multiple inverters can aggravate apparatus problems or affect protective relays needs to be investigated. Another open question of whether inverters should be subjected to self-synchronization electrically, as many oscillatory physical processes are, and, if so, how does it affect the overall harmonic analysis, needs to be investigated.

3.3.3.1 Technology Application Examples

The monitoring, control, and protection functions of wind-power sites are an example of a technology application use. At present, these three functions are performed locally, and information transfer to a central facility is either minimal or non-existent, although the situation is gradually changing for a variety of factors:

- Independence of renewable-energy penetration. Utilities install SCADA systems at substations and, in some cases, extend these systems to individual customers, as a recent trend shows. Once the SCADA system is in place, it is an incremental step to have voltage sensors at points along a feeder and control the voltage regulator accordingly. Voltage regulation minimizes any undesirable effect caused by operating renewable generation along the distribution feeders. SCADA today requires RTUs or computers that mimic these devices and uses a protocol that is not suited to renewables in high numbers due to limitations on point counts within a given RTU. In particular, the SCADA paradigm is *station point*-based, which is inappropriate for devices behind the meter.
- It is possible for wind-power sites with computer-controlled systems to interface with the SCADA, so the utility dispatcher knows wind-power production on a continuous basis. In addition, the dispatcher could shut down wind power when the weather service forecasts a severe storm is approaching the wind site; for an emergency situation,

such as wind site islanding; or times when the power demand is at its minimum and conventional generators on the grid are at their minimum power production.[16] Today, wind turbine SCADA is performed by the turbine manufacturer, who is more concerned with on-line diagnostics and maintenance than forecasting and power scheduling. There is a need for wind-farm management systems that support operations and market interfaces at a higher level.

- Economic factors will dictate the amount of centralized control for wind-power sites. Communication and control between wind sites and a central facility may occur in the following ways:[17] under local control with start capability, synchronization, stand-alone capability, and protection; reports to a central facility with on/off operating mode, power flow, voltage magnitude, and revenue metering; and control command from a central facility with change operating mode (from on to off and vice versa) and power level change. For economic reasons, small wind generators will be under local control only; the central facility will receive information on an infrequent basis, if any. Large wind sites will almost certainly be monitored and controlled by a dispatch center. This control architecture can achieve proper coordination between the utility and the wind-site owner, thus resulting in benefits for both.

Performance monitoring of multiple photovoltaic (PV) sites is another example of a smart grid application related to renewables. In places that adopt feed-in tariffs for grid-connected PV systems, quality control and energy production are important, especially when a large amount of power is involved. Companies and engineering consultants offer methods and/or services for continuous PV system supervision. To assess the PV system efficiency, two data measurements are necessary: the solar irradiation at the PV site and energy production measured at the inverter exit. With this data and individual PV system technical description, efficiency and performance can be calculated. This type of calculation is typically done at a central facility, with the EU JOULE III project PVSAT (a continuous performance-evaluation system of photovoltaic sites by using satellite data[18]) being an extreme example. Under this project, the site-specific solar irradiation data are derived from satellite images rather than from ground-based measurements. A target value will be estimated for each individual PV site and will be reported to system operators, who will compare targeted and actual production values.

As utilities and other organizations venture into the business of leasing rooftop space for distribution-connected PV installations, a similar set of issues will arise as with wind farm SCADA.

---

[16] This is particularly true when it is uneconomical to shut down the conventional plants and restart them at a later time.

[17] Johnson, Gary. *Wind Energy Systems*. Electronic Edition, 2001.

[18] Goetzberger, A. and V. Hoffmann. *Photovoltaic Solar Energy Generation*. Springer-Verlag, 2005.

3.3.3.2 Contributions to Renewable Energy

To increase renewables penetration in distribution networks, the seemingly obvious approach is to upgrade or redesign the circuits and their companion protection and control; however, economics may limit the extent of this approach. Whether hardware-oriented network reinforcement can be done, the role of software-oriented solutions is to utilize information that will maximize the use of existing utility assets, including wires, transformers, and switchgears.

The allowable distributed resources' penetration in a distribution network is case-specific, due to a number of variables a utility must consider, including availability of renewables resources, local laws, operation standards, budget situation, load mix, and load profile. Non-technical issues aside, a number of cases discussed below defend the view that application support systems can lower the barrier to renewables penetration.

- If renewables are put in to follow load demand, then the net effect (namely load reduction) is positive. However, the unintended consequence of this situation is that load growth will be masked, from the network perspective. The argument against renewables is built around service reliability and utility equipment overload issues that occur when the renewable source suddenly goes out of service. This becomes a moot argument when an information system collects and exchanges data between the renewable site and the central control. Collection of this data would allow engineers to perform network planning and take appropriate actions should an emergency take place.
- In a more likely case in which renewables do not follow the load, increasing renewables' penetration—particularly for those variable in nature—can lead to voltage standards' violation. This issue can be mitigated by proper coordination between the control of these individual resources and existing utility-owned voltage controls (i.e., tap changers, capacitors), even after the network is upgraded or reconfigured.
- Thermal limits of lines or substation equipment can be a barrier to high penetration of renewables. Operators might accept some overloading for a short time by having a good monitoring and analytical system. For example, if line overloading is caused by wind power, the operator may allow a temporary overloading, since high wind speed at that instant will also cool the overhead lines, assuming the operator has a dynamic thermal rating program that uses wind speed as one of the inputs.

3.3.4 Market Data

3.3.4.1 Saturation of Technology

Applications for networks with renewables are an untapped market. In a traditional environment with no renewables, the market is dominated by a few large vendors, such as ABB, GC, Siemens, OSI, ACS, and AREVA. Renewable-only applications are few and related to forecasting and planning domains, such as AWS Truewind. It is expected that some traditional vendors will enhance their products to account for the new distribution-network paradigm.

Table 8. Existing players in this space

Application support	Suppliers today	Maturity	Renewables support
SCADA	ABB, GE, Siemens, OSI,ACS,AREVA, SNC Lavelin, Telvent	mature	no
Distribution Management (network analysis)	ABB, GE, Siemens, OSI,ACS,AREVA, SNC Lavelin, Telvent – Miner and Miner	mature	no
Outage Management	ABB, GE, Siemens, AREVA, SPL, Intergraph	mature	no
Work Management	Various	mature	no
Distribution Planning	ABB, AREVA, Siemens, CYME	mature	no
Asset Management	UMS, KEMA, IBM	mature	early stages
Renewables Forecasting	AWS Truewind	mature	yes
Renewables Scheduling / Market Interface	OATI Developing	green	none yet
Wind Farm Management (WMS/SCADA)	None	nil	implied when developed

Source: KEMA

3.4 Building Automation and Home Automation Systems

Building automation system (BAS) and home automation systems (HAS) have been separated into two categories since there are generally significant differences in each of the application areas. While there are general similarities in each of these systems, the BAS market is more mature, manages a number of conditions within the building, and is primarily installed to optimize building energy performance, occupancy management, safety, and envelope management. While this market has been maturing, both in levels of control and intelligence of sensors and control strategies, HASs are beginning to emerge as devices placed under control and the interaction of external conditions are considered. Among the leading areas that are driving the adoption of home automation systems are the integration of distributed generation and smart grid functionality.

Because of the difference in development timelines, many legacy BASs need to be considered for integration into the smart grid. Additionally, there is typically a great deal of information available from these systems, including occupancy information, subsequent facility management (for example, chillers, compressors, and other assets).

On the other hand, HASs are relatively new to the market. Although thermostat and air conditioning controls have been available to home systems for years, the opportunity to integrate new applications for residential DG provide a *blank canvas* for system and component integration.

3.4.1 Definition of Technology

The following figure displays a typical BAS.

Figure 11. BAS system

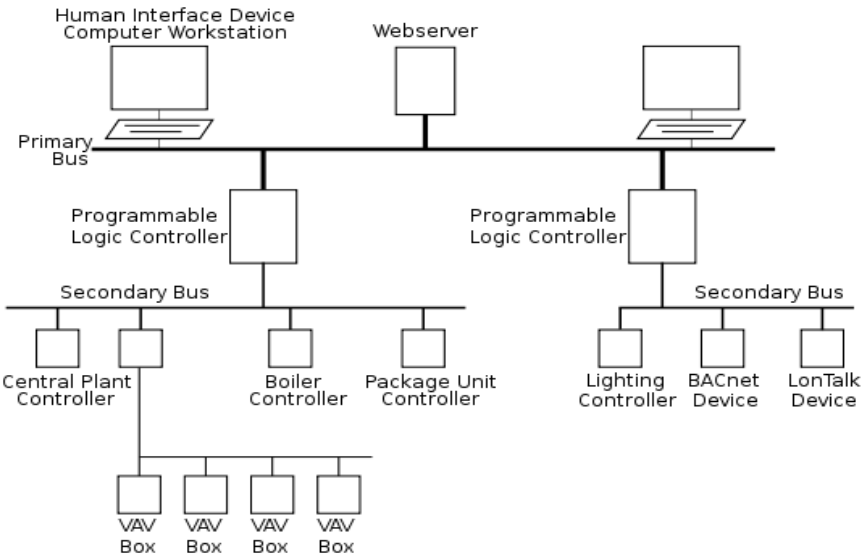

Source: KEMA

BAS is a general term that is applied to a network of measurement and control systems that provide intelligent management of building conditions. These systems manage equipment, such as air handlers, variable air volume boxes, central plant systems, and lighting, to optimize energy consumption and comfort. In addition, these systems have built-in intelligence to include occupancy sensors and can react and respond to varying conditions, and integrate intelligent fire alarm and security protection schemes.

Typically, these systems include remotely monitored sensors that report on space temperature, humidity, and occupancy. Sensors can monitor air flow, differential temperature across heating and cooling elements, differential air and water pressures as well as voltage levels (kilowatts [kW] and kWh), on the equipment side.

On the control side, BAS can control chillers, chilled water plants, boiler operations, heat exchangers, air speed, inlet air source management, variable air volume boxes, and so forth. Normally, a holistic view of building energy is managed to control demand and peak conditions of coincident device operation.

As buildings' environmental management become more sophisticated, so do the building automation systems. In many cases, external energy sources can be managed and dispatched to manage peak requirements. These supplemental sources may take the form of locally generated energy, such as solar or other renewable resource as well as provide an interface to spot pricing in the energy market place.

3.4.2 Current Status of Building Control Systems in California

California has been actively promoting building automation as an energy management solution.

3.*4.2.1 PIER Energy-Efficient and Affordable Small Commercial and Residential Buildings Research Program*

This Energy Commission Public Interest Energy Research (PIER) Program develops and demonstrates technologies designed to make California buildings healthier, more efficient, and more affordable. Small commercial, institutional, and residential buildings predominate in the inland areas of California. The high growth in these areas leads to concern not only for energy efficiency, but also for new electric transmission and distribution infrastructure to meet peak loads. One of the five major research elements includes advanced load management and controls to save energy and manage peak loads from buildings. This program element had five research projects that explored strategies and communication protocols to reduce peak electrical loads in buildings, individually, and in groups as follows:

- Projects 3.1 and 3.2 address load reduction in individual buildings using demand controlled ventilation and night ventilation to pre-cool the building mass.
- Project 3.3 investigated methods to allow appliances to turn themselves off in response to sensed conditions on the electrical grid (without a command from a utility controller) as well as methods to detect high stress in the grid.
- Project 3.4 promoted the continued development of communications protocols to integrate lighting controls into the heating, ventilating, and air conditioning (HVAC) Building Automation and Control Network (BACnet) control standard and to allow two-way communication through the utility meter between the building control system and the electric utility grid managers.
- Project 3.5 explored practical ways to coordinate load reduction among buildings on a common utility meter while minimizing comfort impacts on occupants.

3.4.2.2 PIER Demand Response, Building, and ESI Programs

The Energy Commission Public Interest Energy Research (PIER) has an initiative on demand response to electricity prices and system contingencies. It is coordinated with the Energy Commission's Buildings Program and Energy Systems Integration Program. This program conducts R&D on technologies and policies that facilitate DR to allow electricity users to respond automatically to time- and location-dependent price and contingency signals to reduce or shift loads.

3.4.2.3 Demand Response Research Center

California needs a real-time demand-side infrastructure to respond to supply-side problems. This DR infrastructure must be compatible with requirements of California's independent system operator and electric utility companies while serving the loads and needs of California's electricity customers. The Energy Commission Public Interest Energy Research (PIER) provided $8 million in funding over three years for a Demand Response Research Center (DRRC) that is

managed by the U.S. Department of Energy's (DOE) Lawrence Berkeley National Laboratory (LBNL).

The DRRC plans and conducts multi-disciplinary research to advance DR in California. DR can facilitate quick, automatic reduction of energy use in buildings, industrial facilities, and homes in response to a rising price in the cost of power or an emergency on the electric grid.[19]

3.4.3 Key Characteristics

Building automation is key to facilitating commercial and industrial (C&I) and small commercial renewable monitoring on to the grid. In addition, as PHEVs have the potential to be aggregated at commercial locations, building controls will help facilitate the use PHEV loads as a tool. For load control and demand response, building control systems will allow for better coordination with grid needs, allowing more opportunities for the grid to proactively respond to issues of variable generation from renewables. Additionally, BAC will prove useful in helping C&I customers achieve their green building goals.

3.4.3.1 Links to Smart Grid

The main linkage issue in the future will be integrating information exchanged and managed between building controls and AMI metering. At present, AMI meters have had limited capabilities to interact with building control systems. Generally, these meters provide rudimentary consumption information that is used by the BAS and building manager. However, the intersection of metering and BAS will become more strategic and valuable as smarter meters equipped with more robust information make their way into the marketplace. This is particularly evident as smart grid and distributed energy resources become more predominant. A key factor to this drive will be the effective use of net metering as buildings potentially can become energy sources for the grid.

3.4.3.2 Contributions to Renewable Energy

BAS and Intelligent Building Control (IBC) are essential elements for renewables enablement. The ability to interact with external conditions and to effectively manage the Grid-to-Building (G2B) and Building-to-Grid (B2G) will occur through and in concert with these technologies.

3.4.3.3 Communications for Commercial Building Automation Systems

Interoperability protocols are used to govern communications within a building automation system. Some protocol developers place the standard in the public domain for use of any vendor, such as Honeywell, Siemens, or Johnson Controls, in developing equipment for the building automation system. Some protocol developers choose to keep portions of the protocol proprietary while allowing manufacturers to develop products that adhere to the standards set by the protocol. The most widely used protocols today are BACnet, Modbus, N2, and LonWorks.

---

[19] PIER Demand Response Research Center. (http://drrc.lbl.gov/)

- **BACNet**: Building Automation and Control Network (BACnet) is the term commonly used to refer to the ANSI/ASHRAE Standard 135- 1995, adopted and supported by the American National Standards Institute (ANSI) and the American Society of Heating Refrigeration and Air-Conditioning Engineers (ASHRAE). BACnet is a true, non-proprietary open protocol communication standard conceived by a consortium of building management, system users, and manufacturers. The BACnet protocol defines a number of services that are used to communicate between building devices. The protocol services include "Who-Is," "I-Am," "Who-Has," "I-Have," which are used for device and object discovery. Services such as read-property and write-property are used for data sharing.
- **Modbus**: Modbus is an open protocol, meaning that it is free for manufacturers to build into their equipment without having to pay royalties. It has become a very common protocol used widely by many manufacturers throughout many industries. Modbus is typically used to transmit signals from instrumentation and control devices back to a main controller or data gathering system. Modbus is a communication protocol developed by Modicon systems. In simple terms, it is a way of sending information between electronic devices. The device requesting the information is called the Modbus master, and the devices supplying information are Modbus slaves. In a standard Modbus network, there is one master and up to 247 slaves, each with a unique slave address from 1 to 247. The master can also write information to the slaves.
- **N2:** N2 is the BAS protocol developed by Johnson Controls that is used between network control units (NCU) and the individual equipment or central plant controllers. The N2 protocol was widely accepted in integration by a number of external fire alarm, security, chiller, boiler, lighting, variable frequency drive, and leak detection manufacturers. Johnson Controls allows external manufacturers access to their N2 protocol to continually add new products to be integrated into their control scheme. Several legacy BAS systems can also be integrated into the N2 protocol to allow control operation and integration between two formerly proprietary systems.
- **LonWorks:** LonWorks is a networking platform developed by Echelon Corporation that supports the interconnection of various devices equipped operating over a variety of media, such as twisted pair, telephone, power line, and fiber optics. The communications protocol (LonTalk) is an accepted standard for control networking (ANSI/CEA-709.1-B). This control networking protocol has expanded beyond BAS and is now used in applications such as in-train controls, including electro-pneumatic braking systems for freight trains, and SEMI (semiconductor equipment manufacturing). The Lon protocol is also one of several data link/physical layers of the BACnet ASHRAE/ANSI standard for building automation. Among the key features supported in LonWorks is a both the ability to operate peer-to-peer as well as in a hierarchy.

3.4.3.4 Examples of This Technology and Applications

Today, the main application of BAS in smart grid is to enable demand response (DR). There is limited penetration by utilities into building automation systems as a service for their clients. Generally, these systems are locally installed, managed, and operated. A growing trend is the linkage of these systems to DR and control of renewable resources. There is a variety of available connections and use of the BAS for utilities; often this interface would interact with DR. It is estimated that less than 30% of buildings have robust IBCs that can provide the interactive control necessary for holistic management.

3.4.4 Market Data

BASs are generally mature, although there have been some recent improvements in algorithms, human interface, and remote sensors. There is also a movement toward using shared data services over Ethernet rather than hard-wired systems. Key issues for consideration include:

- Holistic integration of controls and building management.
- Wireless sensors and controls.
- Standardization of interfaces.
- Extension of human interfaces to mobile devices.
- Link to green building initiatives, such as Leadership in Energy and Environmental Design (LEED).

3.4.4.1 Market Barriers

The primary market barriers for BAS are the adoption and widespread use of interoperability standards. Additionally, developing a common interface between grid and building management is required. The balance between local versus central management must be achieved to overcome fears of external control situations. Use of local metering must be overcome to prevent accuracy issue dispute.

Building control systems are mature products with a large number of suppliers as well as a tendency toward proprietary systems. The primary focus has historically been internal to buildings and not to communicate or integrate externally. Hence, though the control systems offer a great deal of information on energy use, linking to the smart grid or AMI meters may be problematic for future use.

3.4.4.2 Saturation of the Technology

The market is very mature with legacy systems with a market potential of approximately five million commercial buildings.

3.4.4.3 Existing Players in This Space

There is a growing list of system and element providers. Additionally, the traditional control protocols are expanding to accommodate new requirements making it possible for more interaction on a peer-to-peer basis.

Leading providers of the technology include:

- Johnson Controls
- Siemens Building Control
- Honeywell
- Invensys
- Andover Controls
- Alerton
- Delta
- Trane

3.5 Home Area Network (HAN) Technologies

The following figure displays a common configuration for a HAN system.

Figure 12. Home area network

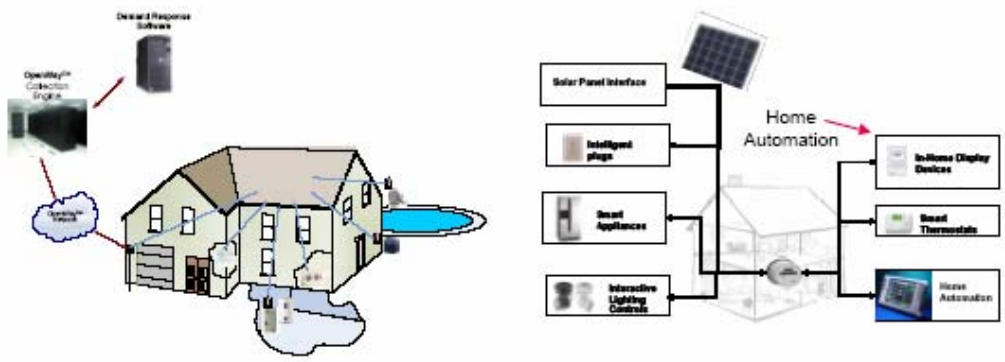

Source: KEMA

3.5.1 Definition of Technology

HAN is an extension of smart grid technologies into customers' homes. It transmits data between a utility smart meter and home energy devices through a communications gateway. With HAN, utilities and customers can potentially manage load by remotely controlling home devices, such as programmable and communicating thermostats, load control units, in-home display devices, and distributed energy resources.

3.5.2 Current Status of Home Area Networks California

These systems are often grouped with AMI efforts that are being implemented in the State of California. Each of the main utilities is implementing smart grid-level programs around advanced meters. A summary of these activities from the three largest utilities in California is shown in Figure 13.

Figure 13. Southern California AMI efforts

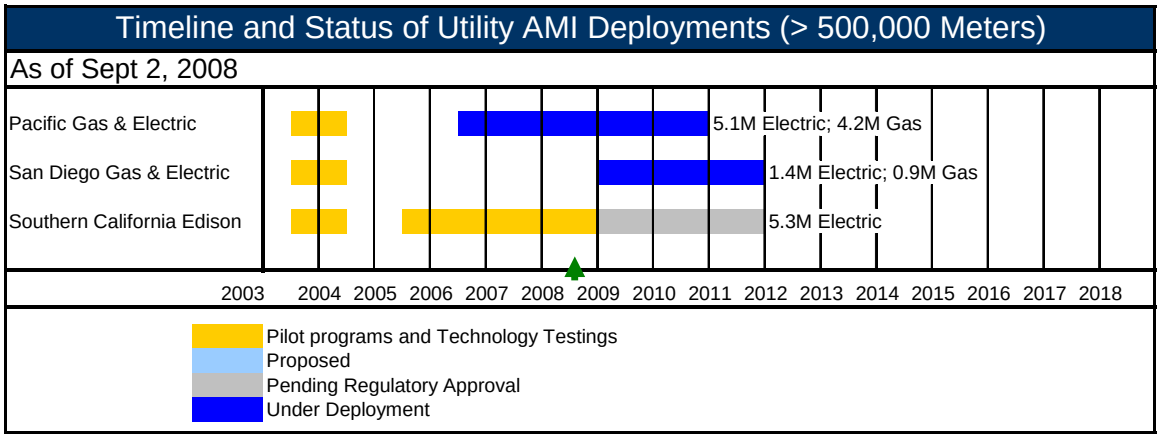

Source: KEMA

3.5.2.1 Southern California Edison

SCE is engaged in a seven-year, $1.3 billion exercise that commenced in 2009 to install electricity meters throughout Southern California (except Los Angeles), serving 13 million people and 5.3 million meters.

- Currently selecting AMI infrastructure solution, but has specified ZigBee for every meter, and have also selected cellular for backhaul.
- Have selected Itron OpenWay for communication backbone.
- Looking for non-Itron meter to use Open Way to maintain open approach.
- Have selected HAN/Local ZigBee platform, since they maintain best fit with requirements.
- Considered IPv6 over Low power Wireless Personal Area Networks (6loWPAN), but there are predictions that it will not be ready for deployment in 2009.

3.5.2.2 Pacific Gas and Electric

In a program extending from 2007 through 2012, PG&E plans to install 5.1 million electricity and 4.2 million gas meters at an approximate cost of $1.74 billion (approx $157 per meter). The proposed meters are wireless for gas and PLC for electricity.

- Using communication infrastructures including Star Hexagram fixed-wireless network.
- The Hexagram solution uses licensed power (450-470MHz) radio contained within *blot on* modules. This also looks to be a one-way AMR solution.
- Network includes an AMI interface/MDM function between meters and utility systems.

3.5.2.3 San Diego Gas & Electric

From 2008 to 2009, SDG&E will install 1.4 million new electricity meters with 900,000 AMI-enabled gas modules.

3.5.2.4 Sacramento Municipal Utility District (SMUD)

SMUD received approval on June 11, 2009, to embark on a program for approximately 600,000 meters. Details are not fully known at this time.

3.5.3 Key Characteristics

The implementation of HAN can be broadly categorized into either a wired network or wireless network.

- **Wireless network**: The major wireless communications standards are ZigBee, Z-Wave, and Bluetooth. They are mesh networks based on radio frequencies. These networks have low data rates (usually 250 kbps or less), consume little power, are extremely inexpensive, and can reliably control hundreds of devices in performing quick simple tasks. The range of a wireless network is around 150 feet for ZigBee and Z-wave and between 10–100 meters for Bluetooth.
- **Wired network**: Wired networks take advantage of existing wiring, such as power lines, Ethernet cable, coaxial cable, and phone lines for communications. It is inexpensive, has a wide range, and can reliably control hundreds of devices within a fraction of a second.
- **Hybrid network**: A hybrid approach complements the characteristics of a wired network and a wireless network. A wireless network is limited by its range, while a wired network is limited to devices that connect to the household power line system. By having both networks, customers can ensure seamless home area communications.

3.5.3.1 Links to Smart Grids

HAN is usually deployed with utilities' AMI implementations and is considered components of the AMI roll-out.

3.5.3.2 Contribution to Renewables in California

HAN technologies are key enablers for renewables. In particular, they provide a means to connect information from various elements, such as inverters and storage devices. The emergence of interoperable standards will continue to foster this enabling capability.

3.5.3.3 Types of Applications

Today, the main application of HAN is to enable demand response. Many utilities, such as Centerpoint, SCE, PGE, SDGE, Consumers Energy, and Oncor, are deploying AMI combined with HAN. HAN allows utilities to communicate to various energy devices at the customer's site during a load reduction event. The utilities can automatically trigger load reduction on HAN-enabled equipment based on the customer's predefined settings. In addition, customers can manually adjust on-site load based on information (e.g., real-time pricing) communicated to them from the utilities via displays on their HAN devices.

3.5.4 Market Data

Key issues associated with high penetration of HANs include:

- **Wireless HAN technology** is already at a mature stage. As devices gain wider penetration in the marketplace, a few concerns have arisen:
  - **Compliance testing**: It is rumored that not all listed devices fully comply with specifications for the compliance testing.
  - **Interference**: Wireless services continue to grow significantly, and there is a potential for interference among these.
  - **Non-utility HAN devices**: The increasing use of HAN technologies outside of the utility space may create some conflict and contentions; a gateway may be needed to arbitrate among these.

Presently, the penetration of wired HAN is limited due to the following:

- **Connectivity**: The connectivity to some devices, such as thermostats, is challenged since typically they use step-down transformers, which would block use of AC-based signals.
- **Installation**: Hard wiring components also create an installation challenge.
- **Power line limitations**: The use of the power line for local communications has experienced some limitations. In particular, some devices are inherently noisy (hair dryers, vacuum cleaners, etc.). While these can be effective if conditions are nominal, exceptional cases may be intermittent or unreliable.
- **Connection of home devices**: Home appliances are expected to be connected into the Home Area Networks but there is currently no standard or effort to manufacture appliances that can *plug-n-play* with HAN systems.

3.5.4.1 Saturation of Technology

The market for HANs is aligned with utilities implementing AMI programs. However, HANs are planned components of the utility AMI programs but are still in the concept and design stages of development. The market potential for HANs is approximately 150 million homes in the United States.

3.5.4.2 Market Trends

For wireless HAN, the market will see:

- Further decrease in cost and size of chips.
- Further increase in the number of products available.
- The products will become increasingly more complex and sophisticated.

For wired HAN, there is a growing interest in local power line carrier systems. This would allow devices that are plugged into establish a communications link. In addition, the market will see the embedding of intelligence into traditional dumb devices, e.g., switches and plugs, continuing to evolve.

3.5.4.3 Existing Players in This Space

ZigBee and Z-wave are widely adopted for products that monitor, control, and automate the delivery and use of energy and water. The ZigBee Alliance has more than 280 member companies, including nine promoter companies: Phillips, Honeywell, Mitsubishi Electric, Motorola, Samsung, BM Group, Chipcon, Freescale, and Ember.

Z-Wave technology alone has over 125 developers and 225 products available. Although Bluetooth does not have many energy monitoring devices, it has been a leader of consumer wireless technologies for a decade. There are currently 2 billion Bluetooth devices in the marketplace.

For wired HAN, the HomePlug Alliance has 70 member companies, including Cisco, Comcast, GE Energy, Intel, LG Electronics, Motorola, Sharp, and Texas Instruments. The HomePlug Powerline Alliance has certified more than 165 products over the past seven years, and its member companies have shipped more than 25 million devices worldwide. INSTEON-compatible devices are available from over 20 manufacturers with approximately 200 products.

3.5.4.4 Leading Providers of the Technology

Today, the market for HAN devices centers on programmable communicating thermostats and in-home displays. Future evolution of HAN systems will also involve household appliances as well. The leading suppliers of the two devices are listed below:

- Programmable communicating thermostats
    - Comverge
    - HAI-Omnistat
    - Carrier
    - AprilAir
    - Honeywell
    - Lightstat
    - Control 4
    - Hunter
- In-home display vendors

For HANs, in-home displays are considered to be major components to the systems. The following table lists the major vendors for in-home displays.

Table 9. List of in-home display vendors

Vendor	One-way	Two-way	Utility-centric	Customer-centric
Aclara	X		X	
Ambient	X			X
Aztech		X	X	
BlueLine	X		X	X
Cent-a-meter	X		X	
Comverge		X	X	
Control4	X			X
Echelon		X	X	
Energate		X	X	
Energy Control Systems		X	X	
Honeywell	X		X	
KLG Systel		X		X
Landis+Gyr		X	X	
San Vision Energy Technology	X			X
Secure Meters	X		X	
Tendril Networks		X	X	X
The Energy Detective	X		X	

Source: KEMA

3.6 Substation Automation and Communications Systems

Recent developments in communication technologies have enabled cost-effective remote control systems, which have the capability of monitoring real-time operating conditions and performances of substations. Substation automation systems are expected to play a key role in advanced power system management, especially to address the problems of intermittency that may arise due to increased renewable generation.

3.6.1 Definition of Technology

Substation Automation (SA) is the technology of having communications systems, data concentrators, and substation control and analysis applications deployed in the substation. As such, it serves the following purposes:

- Replacing older SCADA RTU technologies.
- Providing an interface to high-speed digital communications.
- Integrating substation (and possibly feeder) IEDs to accomplish various protection and control objectives.

- Serving as a data concentrator for acquisition and communication of IED non-operational data.

SA goes hand-in-hand with IED deployment and integration. The concept of substation automation is shown in the figure below:

Figure 14. Overview of range of substation automation components

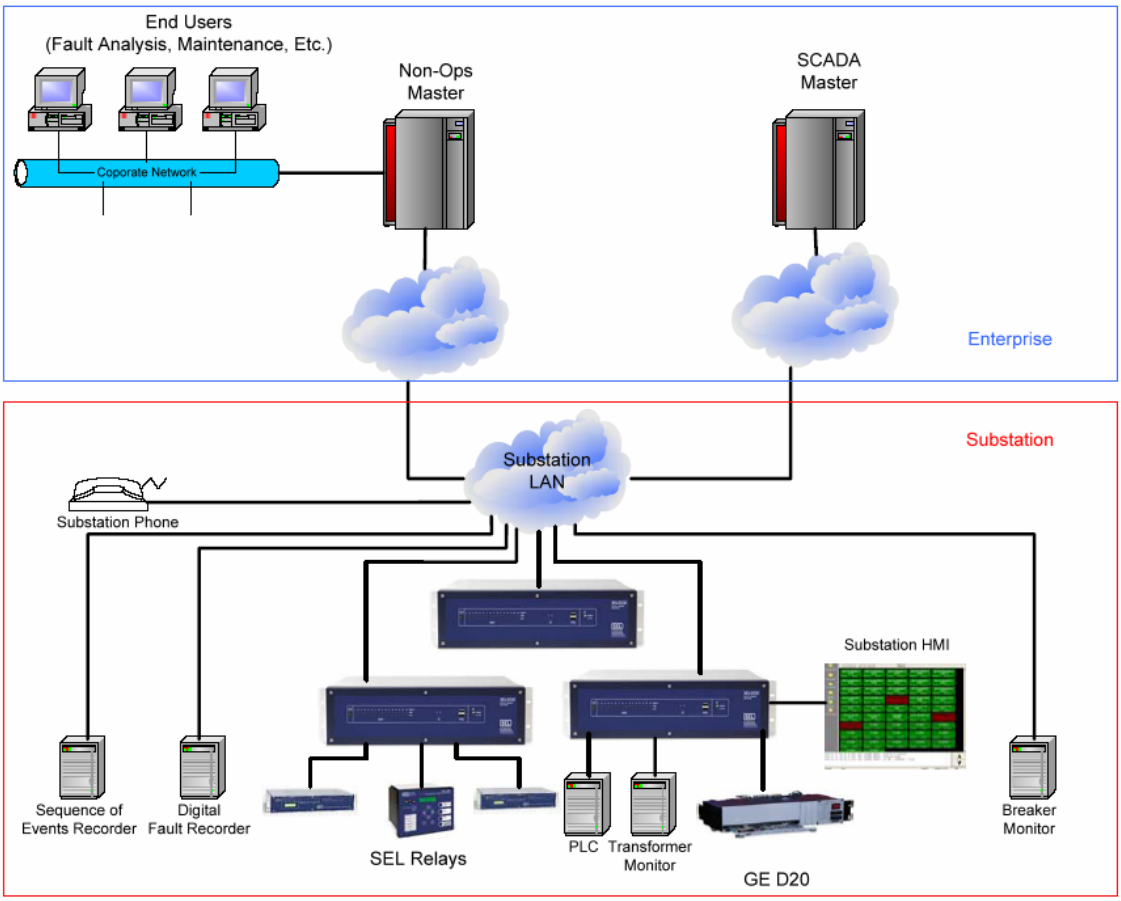

Source: KEMA

In this figure, the SA systems integrate a variety of digital relays, a SCADA RTU (the GE D20), a variety of equipment monitoring IEDs (breaker monitor), digital fault recorders, and SOE recorders, and utilize several data concentrators and automation computers to accomplish the integration and communications. The SA systems communicate to SCADA operational systems as well as enterprise data marts and application systems. In some cases a Human Machine Interface (HMI) is also provided at the station for use by an operator or technician when visiting the station. In many cases, the technician brings such a system (i.e., laptop computer based) to the station and plugs it in as needed. The key attributes of operational and non-operational data are shown in the table below.

SA is the key to unlocking the value of the non-operational data available from IEDs, as described under IED characteristics. It is the doorway to asset management, condition monitoring, improved planning as well as the means to provide more sophisticated local control, such as centralized feeder automation, load roll-over, and other reliability and economics applications. The following table displays the difference between operational data (which used to go via SCADA) and the high volume of non-operational data that ties to equipment condition, protection settings, and other factors.

Table 10. Differences between operational data and non-operational data

Characteristic	Operational data	Non-operational data
Data Format	Usually limited to individual times sequenced data items	Usually a data file that consists of a collection of related data elements
Real Time vs. Historical	Usually consists of real-time or near real-time quantities	Mostly historical data trends over time
Data Integration	Easily transportable by conventional SCADA RTUs using standard (non-proprietary) protocols	Typically use vendor-specific (proprietary) formats that are not easily transported by SCADA communication protocols.

Source: KEMA

3.6.1.1 Key Functions of Substation Automation

- One key function of SA is to poll/communicate with the IEDs, provide some isolation of IED vendor proprietary protocols, and translate them to standards (e.g., UCA MMS/IEC 61850, DNP3, Modbus, Modbus Plus, IEC 870-5-101, 103, 104) in order to facilitate enterprise integration.
- SA also provides a platform for third-party or user-developed substation applications. A recent example associated with renewables integration is the development of PLC (programmable logic controller) applications for the integration of substation storage at a remote location at the end of a very long transmission circuit; the storage is used to provide reliability and voltage control.
- SA provides data concentration to facilitate the communications of various data types and data transfer functionality.

Major SA suppliers and their offerings are listed in the tables below.

Table 11. Substation automation suppliers

Integrator	Website	Model name
ABB, Inc	www.abb.com	PRICOM Substation Server
Advanced Control Systems	www.acsatlanta.com	RTU
AREVA T&D	www.areva-td.com	SA System Server
Bow Networks	www.bownetworks.com	eLAN Substation Communications Server (SCS)
C3-ilex LLC	www.c3ilex.com	RTU
Cannon Technologies	www.cannontech.com	Data Gateway
Cybectec	www.cybectect.com	Substation Modernization Platform (SMP)
DAQ Electronics	www.daq.net	RTU
Data Systems & Solutions	www.ds-s.com	ACTIVia
Convergent Group	www.plan-b-solutions.com	InfoServer
Fortune Automation	www.twpn.com	Data Acquisition Processor (DAP)
GE Energy Services	www.gepower.com	D400
LiveData, Inc.	www.livedata.com	Real-time Integration Server
Microsol Inc.	www.microsol.com	XCell
NovaTech	www.Novatech-llc.com	Orion
QEI Inc.	www.qeiinc.com	ePAQ-9100
Qualitrol/Hathaway	www.qualitrol.com	Substation Information Server (SIS)
Schneider Automation	www.schneider-electric.com	Modicon PLC
Schweitzer Engineering Laboratories (SEL)	www.selinc.com	SEL-2030/2032
Siemens PT&D (Telegyr)	www.sea.siemens.com	StationManager
Subnet Solutions	www.subnetsolutions.com	Substation Suite
Survalent Technology Corp.	www.survalent.com	RTU
Telvent	www.telvent.com	SAGE 3030

Source: KEMA

3.6.2 Current Status of Substation Automation in California

LADWP and SCE have embarked on major projects to install SA throughout their systems.

3.6.3 Key Characteristics

The most critical characteristic of SA today involves the IEC 61850 standard, which includes communications protocols, architecture, and data models. As noted under the IED discussions, all manufacturers provide some degree of IEC 61850 support although usually not as a native implementation. An overall portrayal of an IEC 61850 station is shown in the figure below.

Figure 15. IEC 61850 station

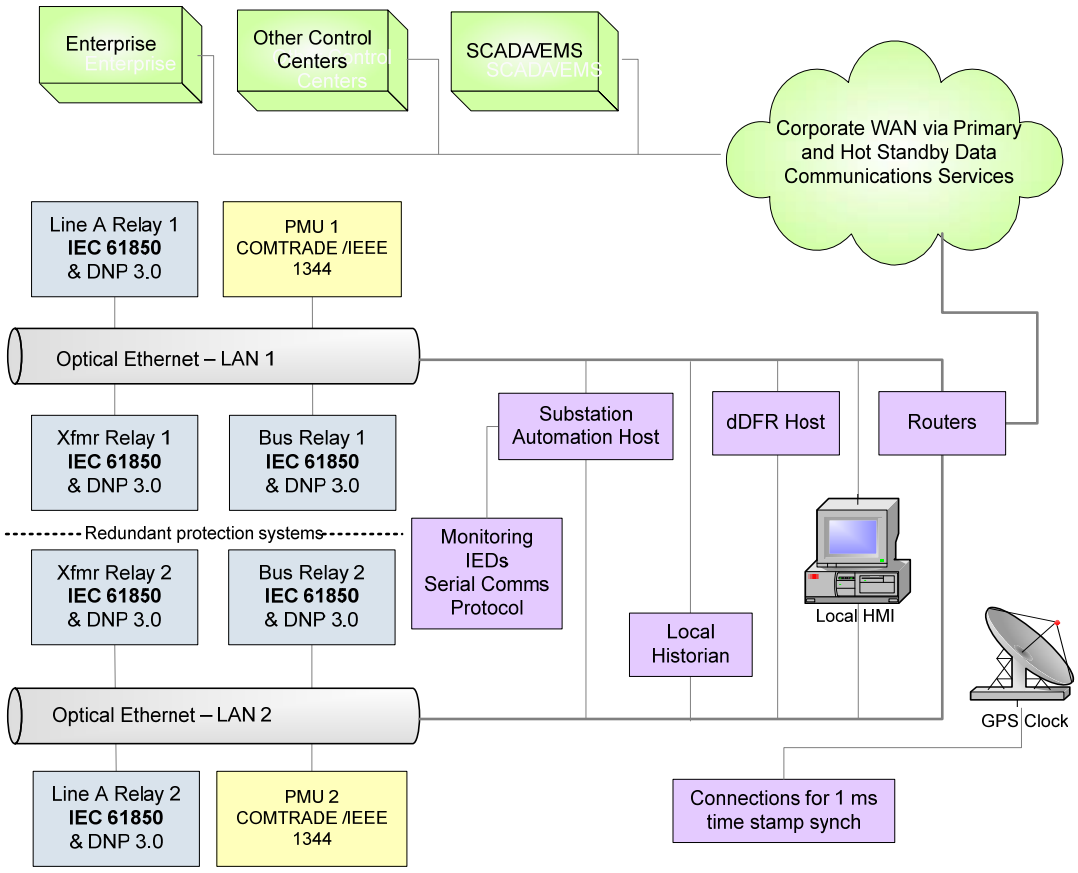

Source: KEMA

IEC 61850 data models and the accompanying parts of the standard are shown in Figure 16: below.

Figure 16. 61859 data layers and standards

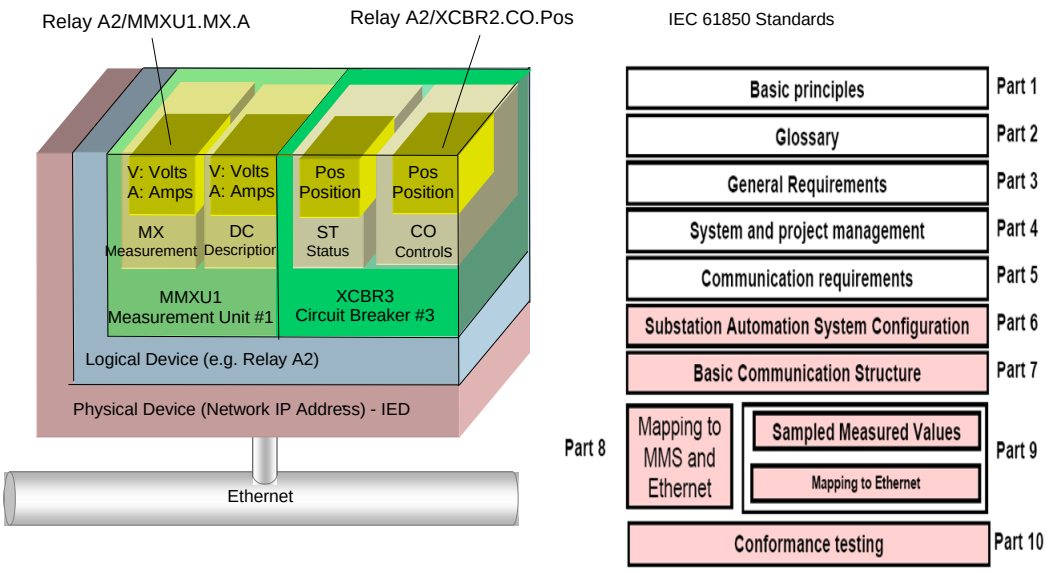

Source: KEMA

The 61850 standard provides considerable variation in terms of layers of systems in the substation, communications transport technologies utilized, and functionality supported. At the time of this report, it does not have data models developed specific to renewable resources, renewables integration, or other associated applications.

3.6.4 Market Data

Global technology companies, such as GE, ABB Transmission & Distribution, Siemens Power Transmission & Distribution, and AREVA Transmission & Distribution, dominate the market and possess a major portion of market share. Other prominent companies in this sector include: Schweitzer Engineering Laboratories, Qualitrol Corporation, Tasnet, SUBNET Solutions, Telvent, Microsol, Schneider Electric, Cannon Technologies, Bow Networks, DYMEC, Advanced Control Systems, Resource Associates International, ZIV, S&C Electric Company, Black & Veatch, Transdyn, Survalent Technology, NovaTech, RuggedCom, and SISCO.

3.7 Feeder Automation and Distributed Intelligence

Feeder automation (FA) provides full-time monitoring and control of circuits, which can reduce annual maintenance expenses and customer outage times through the implementation of remote control switching for feeders outside the substation fence.

Figure 17. Feeder automation and integrated voltage and VAR control

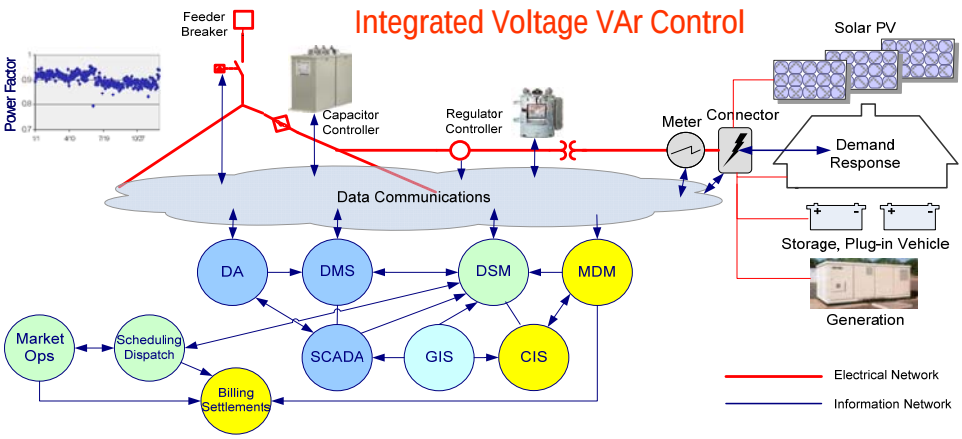

Source: KEMA

This figure shows the FA application for integrated voltage and VAR control, one of the primary high value FA applications. Note the high degree of integration required of renewable resources, feeder apparatus, communications and control systems, and back office analytics.

Another high value FA application is Fault Location, Isolation, and Restoration (FLISR), which can be implemented either centrally via a substation computer or in a distributed way by smart feeder apparatus. The Figure 18 shows the operational benefits of FLISR, which are explained in more detail.

Figure 18. Comparison of customer outage times, without and with feeder automation

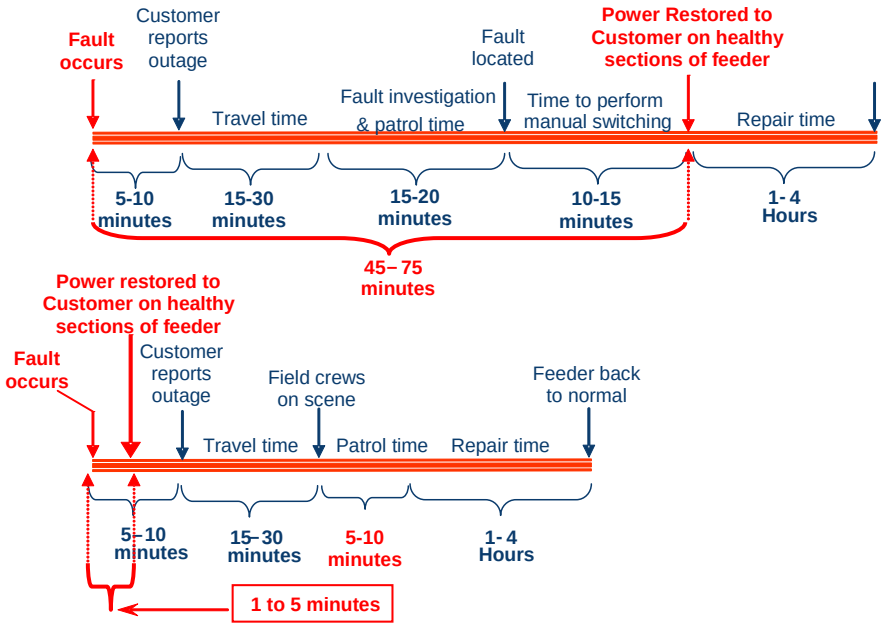

Source: KEMA

3.7.1 Definition of Technology

FA is designed to determine the best switching steps after a fault has occurred in order to isolate the fault and restore customer service as quickly as possible. For some customers, it can be expected that the outage time can be reduced from one hour (without FA) to five minutes or less (with FA). Specifically, feeder automation refers to the remote monitoring and control of power system apparatus located out on the distribution circuits (outside the substation fence). Feeder automation also includes automatic schemes to accomplish coordinated Volt/VAR control on the feeder.

Traditionally, the implementation has been limited to the use of stand-alone electronic devices, including electronic switchgear (reclosers and sectionalizers) and capacitor controls (switch capacitor banks on- and off- based on local conditions, such as voltage and time). In the past, most electric utilities did not implement any form of central monitoring and control for circuit devices, except on a very limited basis. This practice is changing. Increased emphasis on distribution system reliability and power quality together with technological developments has created rising interest in FA. More and more utilities have deployed, or are considering deploying, FA on a widespread basis or on selected (worst-performing) sections of their distribution system. Several vendors have FLISR applications either via distributed intelligence in the reclosers and sectionalizers or via centralized substation based applications.

3.7.2 Current Status of Feeder Intelligence in California

As mentioned before in the Substation Automation Section, several of the major California utilities are embarking on feeder automation projects. LADWP began an effort several years ago to automate all feeders including on the order of 2,400 automated devices on the feeder circuits. PG&E embarked on a major distribution automation initiative several years ago as well. SCE is committed to installing substation automation and feeder automation on all feeders.

3.7.3 Key Characteristics

The key role of FA is twofold. For existing distribution operations, FA means improving reliability of electrical service. For distributed resources, FA promises better integration (and better utilization) of these new resources to the grid.

3.7.3.1 Examples of This Technology and Applications

As mentioned earlier, an important FA application is FLISR, also known as Fault Detection, Isolation and Recovery (FDIR), which has had great success in reducing outage duration and frequency statistics. FLISR provides the means to restore service to some customers before field crews arrive on the scene and is a major tool in the reliability improvement toolbox.

FLISR:

- Detects that a fault has occurred.
- Determines the location of the fault between two remotely controlled switches.
- Isolates the faulted section of the circuit by opening the switches that bound the faulted circuit section.

- Determines suitable switching procedures to restore power to healthy (unfaulted) sections of the circuit without producing undesirable circuit conditions (low voltage, conductor overloads, etc.). This step is usually pre-programmed to some degree and is not adaptive to feeder conditions of the moment, today.
- Executes the switching procedures to restore power to as many customers as possible as quickly as possible.

The sequence of operational FLISR steps is shown below in the illustrative figures.

Figure 19. Sequence of operational steps in FLISR with Fault Between Substation #2 and #3.

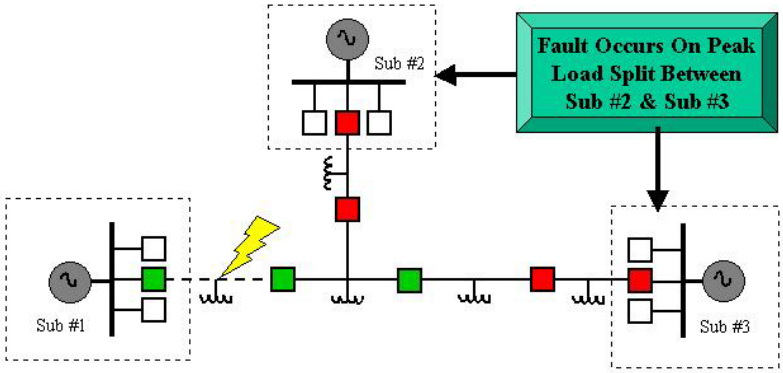

Source: KEMA

Figure 20. Sequence of operational steps in FLISR with Permanent Fault

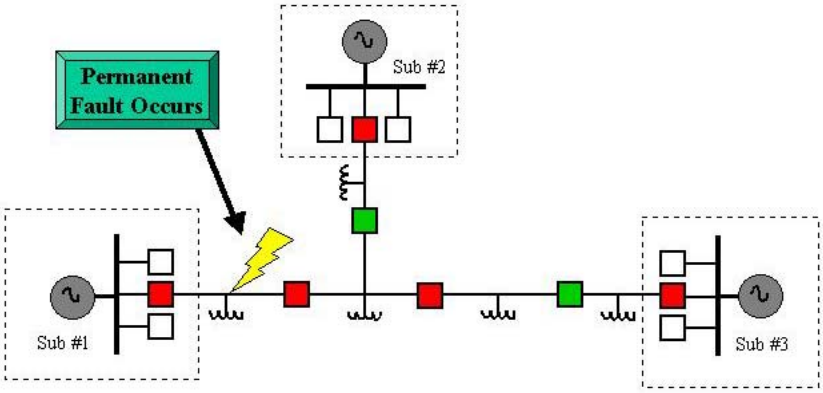

Source: KEMA

Figure 21. Sequence of operational steps in FLISR with Circuit Breaker Trip

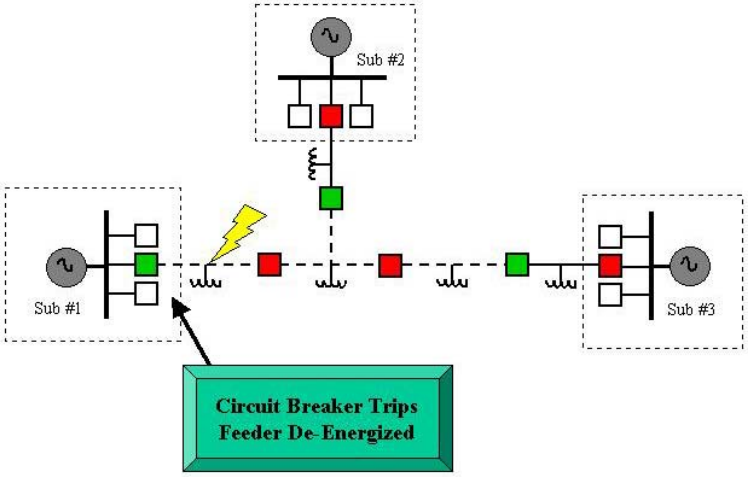

Source: KEMA

Figure 22. Sequence of operational steps in FLISR with Automated Switch Opening

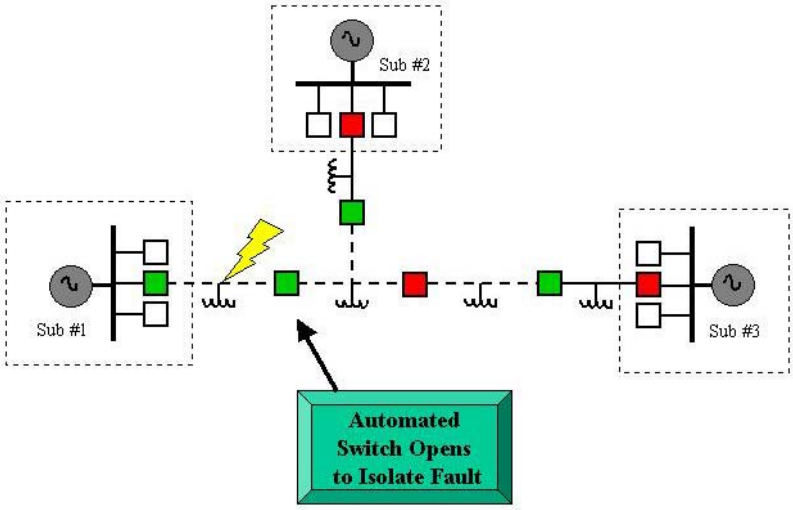

Source: KEMA

Figure 23. Sequence of operational steps in FLISR with Fault at Off-Peak and Load Picked Up

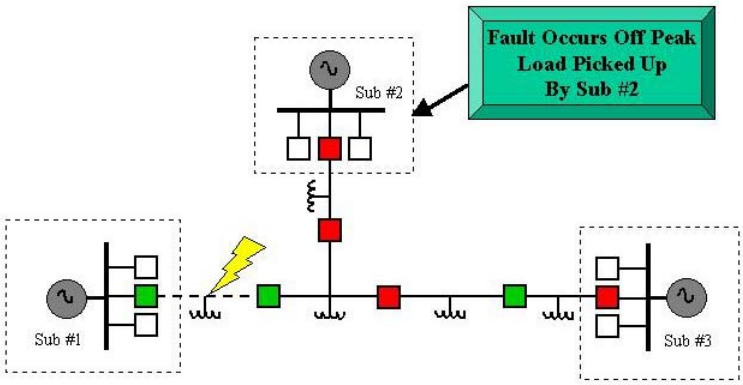

Source: KEMA

Several other application functions are possible using remote-controlled switching besides FLISR. Possible applications include load balancing between circuits for loss reductions, cold load restoration, and fine- tuned load shedding.

Another feeder automation function that has been deployed on the electric utility distribution system is Integrated Volt/VAR Control (IVVC). The IVVC application automatically controls voltage-regulating devices out on the circuits, such as voltage regulators and switched capacitor banks, and coordinates that with tap-changing transformer set points. By employing IVVC systems, electric utilities have been able to achieve more flexibility in operating the circuits, address specific operating problems (such as voltage limited circuits), reduce electrical losses, and reduce demand. Two IVVC applications are noteworthy: VAR dispatch and Conservation Voltage Reduction (CVR).

VAR dispatch uses remote control capabilities to switch line capacitors on and off based on system needs, rather than local (at the capacitor bank) measurements. Electric utilities have been able to achieve sizeable reductions in electrical losses that, in some cases, have paid for the investment. A side benefit of the FA approach is that faulty switched capacitor banks (switched capacitor banks are notorious for this) are easily detected.

Conservation Voltage Reduction (CVR) is the intentional reduction of voltage on circuits that are not voltage limited during peak load periods. Reducing the voltage produces a corresponding reduction in resistive load, which in turn can result in savings in demand charges and possible deferral of system expansion projects. CVR has been deployed very effectively in the Pacific Northwest as a means of improving the overall efficiency of the power delivery system.

3.7.3.2 Role in Increasing Renewables in California

Today, FA applications, such as FLISR, are aimed at improving reliability. In the future, this role may become one of maintaining reliability while accommodating renewables, if the applications can become adaptive in their rules and decision making according to dynamics,

such as renewable power output, total renewable capacity on the feeder, and so on. FA applications such as Volt/VAR control may be useful or necessary to accommodate the characteristics of inverter-based generation (and load) associated with renewables. The control schemes that Volt/VAR control use will have to be adapted to exploit local storage, as one example of how FA may be used to assist with renewables integration. In general, the transition to a bidirectional grid will imply that protection and switching will have to become more sophisticated and adaptive as an extension of FA.

Advancements will be required in FA technologies to accommodate renewables as follows:

- Settings and rules will have to be adaptive to the amount of renewable capacity on the feeder and the current renewable power production.
- FA schemes will have to exploit local storage devices.
- FA systems will have to communicate with distributed resources—storage for certain and probably photovoltaic and wind as well.
- FA systems dynamic adaptation will require new analytics that address the bidirectional and stochastic paradigm of smart grid and high renewables.
- FA systems should incorporate new protection apparatus, such as fault current limiters.

More analysis is needed to understand the gap between FA's original intention, which is to reduce the outage time to customers in the case of FLISR application, and its expected role in accommodating distributed resources. It is reasonable to expect that FA can serve the renewable penetration in two ways:

- If the distributed resource happens to be on the healthy section of the faulted feeder, FA can help reconnect it to the grid quicker than without FA. This means less downtime (or more utilization) of the resource.
- For distributed resources not affected by the fault, FA can bring some of them in to serve certain sections of the feeder. This means more utilization of these resources and continuation of service for customers on those sections.

In both of the above situations, communications and coordination between FA and relevant distributed resources remain an unexplored area and need to be addressed by vendors and utilities.

3.7.4 Market Data

The following figures illustrate the size of the total FA market.

- The estimated cost to fully automate a feeder is about $200,000–$240,000. The lower figure came from a KEMA study on the role of feeder automation in improving customer service reliability (Source: KEMA-PG&E *Business Case Study for Distribution Reliability Improvement Through Automation*, August 2005.). The larger figure came from an EPRI document, *Advanced Distribution Monitoring*, EPRI-1010667, 2005.

- EPRI estimates that there are 320,000 feeders in the United States. (This figure is also from EPRI-1010667, 2005.)

These numbers suggest that a complete FA implementation across the United States would cost as much as $64 billion to $77 billion. Another issue is that many rural feeders are not good candidates for FA as the switching possibilities are limited and the normally open ties to adjacent feeders required for FLISR do not exist.

3.7.4.1 Market Trends

FA can be implemented as manual mode (e.g., the dispatcher makes all of the final switching decisions), automatic mode (for example, FA system operates without manual intervention and notifies the dispatchers after the fact), and a semi-automatic mode (mix of manual and automated actions). Electric utilities can choose the level of automation with which they are comfortable. The trend, though, is moving towards the fully automated schemes. Vendors are promoting distributed-intelligence architecture in their FA products to support local intelligent control of FLISR without assistance from the central dispatcher or the substation automation computer. Other vendors are promoting more sophisticated analytics in the substation computer to do more sophisticated FLISR applications based on feeder conditions.

3.7.4.2 Key Technologies for Devices

The components that make up a FA implementation are: distribution SCADA system (if necessary); remote controlled feeder switches (load break, recloser, sectionalizer, etc.); feeder RTU or controller; fault detector unit, and current sensors and two-way communication facilities. From these components, there are different ways (architecture) to implement an FA, including the following possibilities:

- Standalone automatic switches: reclosers, sectionalizers.
- Centralized system: switches controlled by central DMS/SCADA.
- Substation-centered approach: substation unit controls switches on associated feeders.
- *Peer-to-Peer* arrangement: groups of switches communicate to determine appropriate switching actions.

3.7.4.3 Existing Players in This Space

The major players in this market are all established T&D apparatus suppliers: ABB, GE, Siemens, Cooper, and S & C. Some specialized firms, such as Advanced Control Systems (ACS), provide the applications for substation systems but not the field apparatus.

The following provides a list of potential suppliers for FA systems:

- **ABB** demonstrates considerable knowledge and some experience about the subject of substation automation. Products include ABB's MicroSCADA or PRICOM system and include all required master station equipment and field devices, plus the necessary DA application software. Southern California Edison was cited as its primary customer for DA and VAR dispatch.

- **Advanced Control Systems, Atlanta, Georgia,** has many years experience as a SCADA system supplier. Product offerings include SCADA master stations, EMS and DMS application software, and RTUs for both the substation and feeder (pole-mounted). Distribution applications offered include centralized FLISR and Volt/VAR control (rule based), switching order management, on-line power flow with topology processor and load estimator, and GIS interface. Their main strengths are solid distribution SCADA platforms, DMS applications, and mature RTU products. ACS was purchased in late 2007 by Efecac.
- **General Electric (GE) Calgary, Alberta, Canada.** Best known for substation/feeder RTUs (D20, D200, and D25) and data concentrator (D400) products, GE is considered one of the industry leaders in this area. The ability to integrate with GE SmallWorld products is a plus for utilities that use these products. GE has offered a *substation-centered* architecture with application running on a D20 RTU. This system was viewed by some as far too simplistic for handling complex, heavily loaded feeders. GE is using its ENMAC product for DMS. This product is used by many of the distribution companies in the United Kingdom. GE is currently upgrading its distribution product suite to include advanced features and is beta testing the product with some United States' utilities.
- **SNC Lavelin, Inc., Toronto, Ontario, Canada.** A SCADA system supplier with very good DMS applications, including FLISR and Volt/VAR, on-line power flow, topology processing, and GIS interface. It is a system vendor for large DMS projects in Thailand and Taiwan.
- **Survalent, Inc., Mississaugua, Ontario, Canada.** It is a Canadian spinoff from Quindar, a SCADA/communications pioneer. Its potential scope of supply includes a SCADA master, DMS application software, and substation/feeder RTUs/data concentrators. Its also has a commercial relationship with G&W, a supplier of distribution switchgear. DMS applications include centralized FLISR and Volt/VAR control application (rule based), online power flow and topology processor, switch order management, and GIS interface. They have a very unique architecture that streamlines the process of database configuration.
- **Areva Power T&D, Bellevue, Washington.** It is a supplier of large-scale DMS that includes all major DMS applications, including power flow model-based FLISR and integrated Volt/VAR control, automated switch order management, and GIS interface. Its system for Florida Power and Light system is considered one of the most sophisticated DMS applications in North America. Its system uses LP techniques to identify optimal control actions for cap banks, regulators, and LTCs. Areva offers several substation automation platforms through their office in Bethlehem, Pennsylvania (a former Bitronics meter facility).
- **Siemens Power T&D – Minneapolis, Minnesota.** It is are a supplier of large-scale DMS that includes all major DMS applications, including power flow model-based FLISR and

integrated Volt/VAR control, switch order management, and GIS interface. Most implementation experience for these applications is international, however, which is a matter of concern. Siemens also offers excellent substation data concentrator products: StationManager II (not IEC 61850 compliant) and SICAM PAS (IEC 61850 compliant).

- **Telvent-Abengoa – Houston, Texas.** This company has been in this business for many years but has changed ownership and name several times recently—changed from Tejas Controls, Valmet, Metso, Neles Automation, and now to Telvent-Abengoa (a Spanish firm). The current owner (Abengoa) has provided an excellent suite of DMS application software, including FLISR and Volt/VAR control. Recent acquisition of Miner-Miner is a plus for utilities requiring an interface between DMS applications and M-M GIS. They also offer lines of RTU/Data concentrator products.
- **Open Systems International (OSI), Minneapolis, Minnesota.** This company (not to be confused with OSIsoft, the PI historian supplier) has an excellent reputation for modular, standards-based SCADA systems and EMS application software. OSI announced a substation data concentrator product (OSIRIS) over a year ago, but this product is still undergoing development and beta testing.
- **S&C Electric – Chicago, Illinois**. The supplier of Intelliteam II, a unique FLISR scheme that uses a peer-to-peer architecture, which has some significant advantages versus the centralized approach. It is one of the few suppliers that can offer a complete system including controllers, communications, and switchgear. S&C offers a complete line of standalone capacitor controllers, but does not offer a DA-controlled Volt/VAR system. S&C controllers were used as an integral part of IVVC by Duke Energy.
- **Cooper Power Systems– Milwaukee, Wisconsin.** It is primarily a switchgear supplier and possibly a supplier of peer-to-peer communication facilities (Peercomm). It has been considering the development of a system similar to the S&C Intelliteam, but this has not been done to the best of the authors' knowledge. They offer a system to handle some fairly simple open-loop schemes, but to the best of the authors' knowledge, this system cannot handle more complicated, heavily loaded feeder arrangements.
- **QEI – Springfield, New Jersey.** It is a very experienced SCADA and SA system supplier, and also manufactures a capacitor bank controller. They have done a considerable amount of distribution automation work for municipal and co-op electric utilities. Its experience includes delivery of DA systems (VAR dispatch and FLISR) to several utilities, and it has also done quite a bit of work with UCA2 and now IEC 61850.
- **Cleveland/Price – Trafford, Pennsylvania.** They are a vendor for controllers that automate switches from different vendors for feeder switching and for an integrated system that utilizes DigitaLogic to provide some form of decentralized feeder automation functionalities.

3.8 Electricity Storage

Figure 24. Diagram of storage in a smart grid

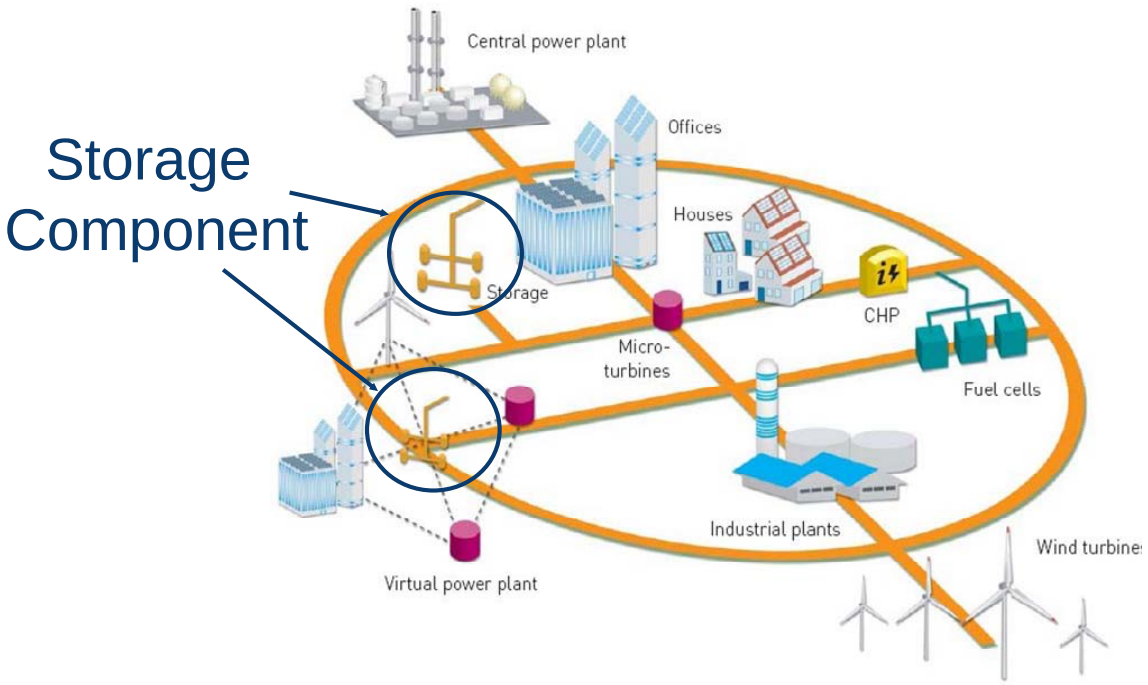

Source: KEMA

3.8.1 Definition of Technology

Storage is an area where advancements to technologies have improved the concept to the point where the technology is being applied to innovative areas. These improvements are allowing storage to become an integral part of future smart grids, in addition to being applied to an old concept—resulting in characteristics that show tremendous potential for technologies to be applied to the smart grid, as well as to help with renewable integration into the electricity grid. Storage promises to bring significant flexibility to grid design and operations, but at the cost of greatly increased complexity in planning and operations in order to realize its benefits.

3.8.2 Current Status of Storage Technologies in California

Storage, in general, is an emerging technology and is not in widespread deployment anywhere in the world. There are pilot projects underway to demonstrate the application of grid-connected storage for ancillary services. For example, AES Corporation is deploying a battery at the Huntington Beach power plant. The start-up company MegaStorage has announced plans to build a large storage facility at an undisclosed wind-farm site.

Additionally, the GridPoint storage units are being sold commercially on the market today, although no data is available for market penetration at this time. These units are generally sold in conjunction with back-up generation and/or rooftop PV.

The Energy Commission is exploring the benefits of storage both at distributed and grid connected levels.

3.8.3 Key Characteristics

The key characteristics that are enabling storage devices to be considered for future grids and key components to smart grid are the following:

- **Fast response**: This refers to charging and discharging speeds of the devices. While traditional power plants, such as coal plants, have ramp rates measured in per minute, some of the technologies that make of the new category of *high performance storage devices* have ramp rates rated in MWs in fractions of seconds.
- **Cycles**: One of the main advantages gained by technology improvements is the number of charging and discharging cycles of the storage devices. Advanced batteries, such as lithium-ion, are currently claiming cycles in the range of 7,000 to 10,000, while flow batteries are claiming cycles in the 40,000 range. Some manufacturers have claimed unlimited life. This factor, the ability to charge and discharge in such frequency, is the main driver for the new applications for the devices.
- **Duration**: The duration is noted because there are a number of types of improved storage concepts. Each of these technologies has characteristics that allow them to exploit specific niche applications. However, not all technologies have the same duration characteristics. For example, flywheels top out at 15 minutes, lithium-ion batteries tend to top out at 1 hour duration, flow batteries fall in the practical range of 2–5 hours, and sodium sulfur batteries have ranges of up to 10 hours.
- **Transportability**: Another unique aspect of advanced storage devices are their transportability. This is a differentiator from large-scale storage applications, such as pumped hydro or Compressed Air Energy Storage (CAES) systems. Advanced batteries are packaged in the 500 kW to 2 MW range, are typically housed in *tractor trailer*-type beds, and have the ability to be placed on any flat surface.
- **Capacity**: Though pumped hydro and CAES systems are capable of capacities in hundred of MWs, high performance devices shown in Figure 25 are now capable of being packaged in capacities up to 2 MWs.

Figure 25. Photos of trailer systems for Altairnano (left) and A123 systems (right)

Source: KEMA

3.8.3.1 Applications for Storage

Today, storage systems are being used for the following applications:

- **Ancillary services**: Frequency regulation and spinning reserve.
- **Integration of renewables**: Smoothing of renewable variability, ramp rates of renewables, and assisting with diurnal cycles of wind and solar projects.
- **Customer applications**: As duration, capacity, and transportability of the units increase, advanced storage begins to act more like a distributed generation device. Since their output is emission-free and the duration covers most outage durations, the units can be used for back-up power and possible demand response applications.

The items listed above are just the main applications; however, the characteristics described above show promise for many areas, including supporting transmission and distribution.

3.8.3.2 Links to Smart Grid

This technology is very capable of existing in stand-alone applications; examples include pumped hydro systems and small-scale back-up power. As the technology begins to be utilized for its envisioned uses, such as assisting with renewable integration or demand response, controls will have to be incorporated that will allow the technologies to be used as a tool and component of smart grid.

3.8.3.3 Role in Increasing Renewable Penetration

This technology is specifically being targeted to help solve issues that renewable or intermittent generation devices may create on the grid, such as maintaining grid operations. This is seen in the applications discussed above where storage is being targeted towards smoothing of renewable variability, ramp rates of renewables, and assisting with diurnal cycles of wind and solar projects. Currently, the most critical advancement required is price reductions of the units themselves, although development of the planning and operational paradigms and algorithms remain a development task.

3.8.4 Market Data

Storage is categorized by a wide range of technologies that include batteries (including flow batteries, lithium-ion, sodium sulfur, and lead acid) and flywheels on the emerging side. For traditional technologies, pumped hydro is also commonly used. Storage technologies encompass a wide range of applications and technologies.

3.8.4.1 Market Barriers

The main barriers to current technologies are cost-related and that very little testing of high-performance devices has been conducted. Storage, as a concept, has been around for many years. In addition, traditional technologies, such as pumped hydro systems and lead-acid batteries, have been present in the marketplace equally as long. However, as the new, improved technologies begin to be introduced and piloted, the technologies have the same barriers as with all emerging technologies.

3.8.4.2 Saturation of Technology

Storage is a new technology being applied to some innovative actions. The market for short-term storage at commercial and industrial facilities is saturated with traditional lead-acid battery storage technology. These applications tend to be limited in their use and are focused only for emergency, back-up ride-through generation at the facility. Furthermore, these applications cannot be upgraded to new technologies, and replacements would be required.

3.8.4.3 Key Technology Differences

The main difference amongst technologies is duration, charge/discharge times, and cycles. Storage needs to be considered as a portfolio approach of technologies and applications. For renewables, the technologies focus mainly on emerging technologies with a range of characteristics.

3.8.4.4 Existing Players in This Space

The table below summarizes some of the key suppliers in storage.

Table 13. Summary of key suppliers in storage

Company	Technology	Emerging / mature	Current penetration levels	Market share
A123 Systems www.a123systems.com Currently piloting technology at AES facility in Southern California. Targeting utility-scale applications of ancillary services, renewables, and PHEV market.	Lithium-ion battery	Emerging	Pilot applications	0%
Altairnano www.altairnano.com Piloting trailer-based, transportable storage systems for frequency regulation.	Lithium-ion battery	Emerging	Pilot Applications	0%
NGK http://www.ngk.co.jp/english/products/power/nas/index.html Considered the most advanced in commercialization of the battery manufacturers. Currently implementing a 50 MW system in Middle East.	Sodium sulfur flow battery	Commercialized	Implementing commercial installation in Middle East	0%
Premium Power www.premiumpower.com Piloting trailer-based transportable storage systems for long-duration	Zinc bromine flow battery	Commercialized for back-up power, emerging for utility scale	Piloting projects at utility scale	0%

Company	Technology	Emerging / mature	Current penetration levels	Market share
applications.				
Beacon Power www.BeaconPower.com Beacon is using their devices to participate in the ancillary services market.	Flywheel technology	Commercialized	Piloting utility-scale applications for ancillary services	0%
Prudent Energy www.pdenergy.com Prudent has recently acquired the assets for VRB Technology, a firm that was leading the piloting effort for utility scale storage devices.	Vanadium redox battery	Pre-commercialized	Piloting applications for utility-scale storage devices	0%
ZBB Energy Corporation www.zbbenergy.com Provides a trailer-based transportable storage device that is being targeted at multiple utility-scale applications.	Zinc-bromide	Commercialized applications being tested at utilities and national labs	Piloting applications	0%
Xtreme Power Solutions www.xtremepowersolutions.com Xtreme Power is building an advanced lead-acid battery system for utility-scale applications.	Advanced lead-acid	Commercialized applications being extended to utility scale	Piloting for utility-scale applications	0%
ICE –Energy www.ice-energy.com ICE-Energy is a provider of thermal storage devices and has the ability to aggregate systems to provide loads as a resource for ancillary services and wind integration.	Thermal storage device based on ICE generation to supplement A/C loads	Commercialized for individual applications	Piloting for aggregated services	0%
International Battery	Lithium-ion	Emerging	Pre-commercial	0%
GridStorage	Zinc-air	Emerging	Pre-commercial	0%
Eagle-Pitcher	Multiple	Emerging	Pre-commercial in utility space	0%

Source: KEMA

The term *storage* encompasses of number of technologies, such as pumped hydro, compressed air energy storage, and emerging technologies, that run a range from batteries, to flywheels, to thermal storage devices.

For the players listed in the table above, the authors note that efforts are still being made to site pumped storage systems, and EPRI is advancing compressed air-energy storage systems as well

as advanced above-ground CAES systems. However, the table lists companies that are actively piloting or selling products into the California market.

3.9 Vehicle to Grid (V2G)

Below, figure 26 shows the potential role and location of PHEV in the grid providing Vehicle to Grid (V2G) services to the grid.

Figure 26. Diagram of PHEV role in smart grid

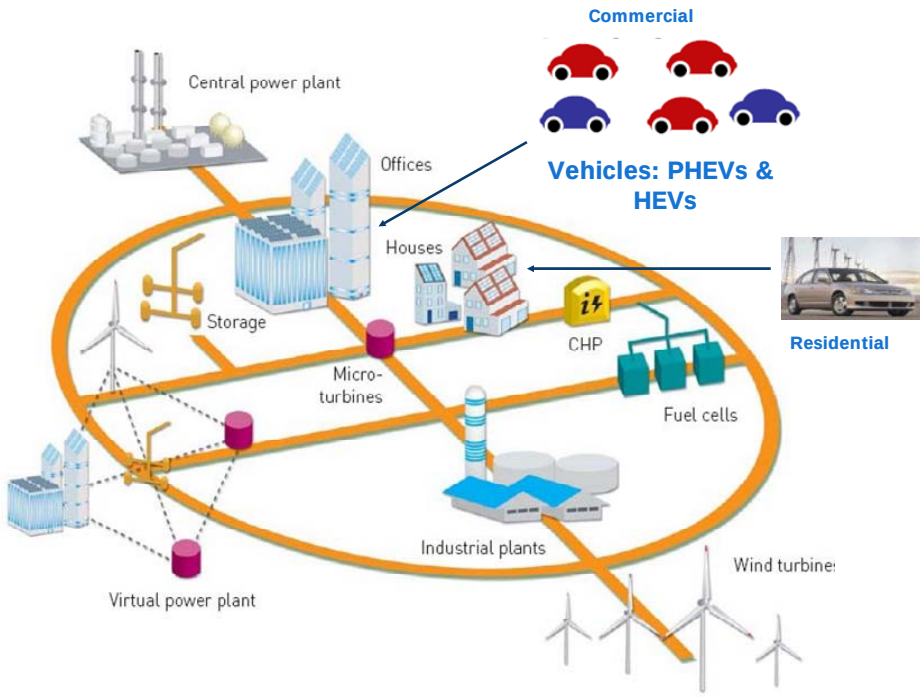

Source: KEMA

3.9.1 Definition of Technology

The Plug-in Hybrid Electric Vehicles (PHEV) and Electric Vehicles (EV) area is expected to see a large increase in penetration between now and 2017. Penetration at appreciable levels is expected to occur in metropolitan areas first. Hence, coupled with California's proactive efforts, penetration rates in cities like San Francisco, Los Angeles, Sacramento, and San Diego will probably occur faster than the national average.

When evaluating the expected role of PHEVs for smart grid, PHEVs and EVs have to be divided into two roles on the grid: (1) as a load on the grid and (2) as a potential tool for the grid.

3.9.2 Current State of PHEVs in California

In California, utilities are working along with non-profits, government agencies, the private sector, and academia to develop V2G technologies. The level of collaborative effort between these entities around PHEV and other vehicle-to-grid technologies is almost unprecedented. All major IOUs and large municipal utilities in California have joined partnerships and developed research programs to evaluate V2G technologies. The following is an initial list of major initiatives:

3.9.2.1 California Air Resources Board (ARB)

The ARB recognizes the importance of grid improvements in order to keep pace with the EV and PHEV markets. In 2000 and 2001, the ARB published *ZEV Infrastructure: A Report on Infrastructure for Zero Emission Vehicles* and a staff paper on "Standardization of Electric Vehicle Charging Infrastructure." The papers contained a number of recommendations related to infrastructure improvements, including the need to standardize EV charging systems.

3.9.2.2 PG&E, Bay Area Air Quality Management District, and Energy CS

In April 2007, PG&E showcased the first ever utility V2G technology demonstration. PG&E, in partnership with the Bay Area Air Quality Management District and Energy CS, first converted a prototype PHEV, by adding a lithium ion battery to a traditional Toyota Prius. PG&E then reversed the flow of energy from the vehicle back to an electrical outlet and then ran several lights and appliances to show how V2G could benefit its customers.

3.9.2.3 PG&E and Tesla Motors

In the fall of 2007, PG&E partnered with Tesla Motors to further evolve V2G technologies by researching smart charging—a form of V2G designed to allow remote control charging of electric vehicles connected to the power grid.

3.9.2.4 PG&E and Google's RechargeIT

RechargeIT is an initiative within Google.org's Climate Change Program aimed at accelerating the adoption of PHEVs (plug-in hybrids) and V2G applications.

- *V2G demonstration at Google with PG&E*: RechargeIT is exploring ways to develop and deploy V2G technology. With the help of PG&E, Google will demonstrate how electricity might be transmitted back and forth between plug-in hybrids and the grid. V2G offers the potential to use plug-in hybrids as battery storage to make better use of the energy and to stabilize the grid. The objective is to collect real-world data to understand the benefits of V2G and enable future adoption.
- *Solar Charging at Google*: Google's plug-in hybrid fleet is connected to solar charging stations on campus to demonstrate the role that renewable electricity can play in replacing gasoline and other fossil fuels in the transportation sector. (See www.google.org for more information.)

3.9.2.5 Better Place, Coulomb Technologies, and Bay Area cities

In November 2008, Palo Alto-based Better Place announced that plans to set up a network of electric car power stations in the Bay Area to be ready by 2012. Coulomb Technologies also announced that it will build a network of 40 charging stations along California highways beginning in 2009.

3.9.2.6 PHEV Research Center

The University of California at Davis PHEV Research Center was launched in 2007 with funding from the California Air Resources Board and the Energy Commission's PIER program. The PHEV Center conducts research through a coordinated statewide demonstration of PHEVs, beginning with hybrid passenger vehicles that have been converted to plug-in hybrids. It plans to expand the program to include medium-duty trucks and encourage the conversion of other passenger vehicle hybrids to broaden the scope of the project.

3.9.2.7 LADWP, SCE, and PG&E along with South Coast Air Quality Management District, EPRI, Eaton and Ford

In early 2007, this project began developing a PHEV system for utility-trouble trucks and vans. Phase 1 of the project took four prototype PHEV trucks based on a Ford F-550 truck chassis to assess the ability to use grid electricity for part of the vehicles' daily duty cycle and test whether advanced battery packaging, charging and cooling systems could last the intended vehicle life of five years. Phase 2 of the project will expand the fleet to 50 trucks and E-450-based vans for utility and public fleets. PG&E and SCE will demonstrate diesel PHEVs; PG&E and LADWP will demonstrate gasoline PHEVs.

3.9.2.8 SDG&E Clean Transportation Program

Under this program, a performance comparison study is being conducted to examine the efficiency of standard hybrid EVs against converted PHEVs. As of September 2008, the study concluded that the PHEVs achieved 67 miles per gallon (mpg), a 60% increase over the standard hybrid's 42 mpg.

3.9.2.9 SCE and Ford Motor Company

In summer of 2007, SCE announced a partnership with Ford Motor Company to explore ways to make electric transportation more accessible to consumers, including developing innovative approaches to reduce the cost of batteries. In March of 2008, EPRI announced a three-year agreement with Ford Motor Company to develop and evaluate technical approaches for integrating PHEVs into the nation's electric-grid system. The new EPRI-Ford program will build on the ongoing SCE-Ford partnership.

3.9.2.10 SCE Electric Vehicle Technical Center in Pomona, California

SCE's center is testing advanced battery technologies that could further enhance the emergence of future energy storage applications in the utility industry. Established in 1993, the center conducts testing and evaluation to better understand and minimize potential impacts of increased quantities of transportation connected to the grid. The center also evaluates various electric-drive technologies for use in SCE's fleet operations to meet federal and state regulations.

Along with this, the mayors of San Francisco, San Jose, and Oakland announced a nine-step policy plan, which will make the Bay Area—and eventually California—the electric vehicle capital of the United States.

3.9.3 Key Characteristics

The key characteristics enabling PHEVs to be considered for future grids and key components to smart grid include:

- Areas where PHEVs act as *storage devices*: The heart of PHEVs and EVs are high-performance batteries that have the same characteristic of high performance storage devices. As in the case of vehicles utilizing lithium-ion batteries, the same devices that are in utility-scale storage, are in PHEVs. Hence, the characteristics will be the same, such as:
    - Fast response.
    - Ability to provide multiple cycles.
    - Duration: In the case of PHEVs, a single device is limited to, on average, 30 minutes. However, if staggered over multiple vehicles, the duration can most likely be extended.
    - Mobility: Vehicles will be providing power at locations where they *plug* into the grid.

Figure 27. Photos of Toyota Prius and Chevy Volt

Source: KEMA

3.9.3.1 Examples of This Technology and Applications (end-use sectors):

Today, PHEV batteries have the ability to perform near-term functionalities as well as sophisticated, long-term functionalities.

- **Smart charging–Load Response**: Vehicle batteries have the capability of having their charging individually monitored and controlled. Either at the vehicle itself or at the expected charging stations, applications are available today that can control charging and respond to load response signals by cutting out the charging of vehicle batteries.

Figure 28. Photos of smart charging tools

Source: KEMA

- **Ancillary services**: Frequency regulation and spinning reserve once PHEV battery devices are aggregated.
- **Integration of renewables**: Smoothing of renewable variability, ramp rates of renewables, and assisting with diurnal cycles of wind and solar projects once PHEV devices are aggregated.
- **Customer applications**: As duration, capacity, and transportability of the units increase, advanced storage begins to act more like a distributed generation device. Since their output is emission free and the duration covers most outage durations, the units can be used for back-up power and possible demand response applications.

3.9.3.2 PHEVs as a Load

When being evaluated as a load, charging times are one of the main drivers that need to be accounted for as to whether load will be added to the grid during peak times or off-peak times. Location is also an important factor, as analysis of the load needs to be accounted for at the feeder and substation level. Smart grid components will play a significant role in determining potential congestion or peak-load issues due to random charging of vehicles. Smart grid will also need to be counted on to determine billing and tariff issues. Cars will most likely charge at multiple locations throughout the state, and consumption of electricity and proper billing of that consumption will rely on smart grid infrastructure to track *accounts*. Finally, charging station infrastructure will be expected to be installed across the state, providing new points of load in addition to linkage points in the smart grid infrastructure.

3.9.3.3 PHEVs as a Tool

The second area for use of PHEVs is as a tool. In this area, there is a near-term impact on load response, where smart grid will be used in conjunction with batteries or charging stations to *cut off* load in response to specific electricity needs. The longer-term impact, and one that can be utilized only when large amounts of PHEVs are introduced into concentrated locations, is as a grid support tool for applications, such as ancillary services. The impact on smart grid in this area will require a sophisticated level of aggregation and controls/logic to provide the necessary response time and ability, availability, and actions from PHEVs to meet the needs.

In addition to ancillary services, there are numerous *tool* areas for PHEVs to support the grid, but where PHEVs first require numbers and aggregations. These areas range from assisting with integration of renewables, T&D reliability support, sophisticated load response, and congestion relief as well as back-up power.

3.9.3.4 Commercial Versus Residential Applications

Separation is also needed between commercial and residential applications. Though the same technology characteristics will be present in each of the applications, some key notes need to be made for each of the areas.

Commercial: Many of the key contributions that can be made by the aggregation of PHEVs are made easier at the commercial level. These factors are:

- **Concentration of vehicles**: Fleet vehicles or commercial parking lots naturally concentrate PHEVs into one area where batteries can be corralled to a great enough scale to contribute to grid services. Less sophisticated software/controls will be required.
- **Charging times**: Commercial facilities may have the benefit of three-phase, 240 volts (V) charging capabilities. This will allow for faster charge times and provide more flexibility between utilizing the battery in the vehicle and maintaining the proper state of charge for the vehicle owner.

Residential: Utilization of residential PHEVs will ultimately prove more complex for utilization and contribution to the grid. Factors for these are the following:

- **Low-voltage charging**: As most homes will charge at 120 V, 15 amps, the time to fully charge will be greatly extended. This does not eliminate the ability to utilize the device for DSM, but greatly diminishes the flexibility.
- **Dispersed vehicles**: Most charging for residential PHEV will occur over a wide geographical area. This does not eliminate each of the devices from contributing to grid services, but it does add a layer of complexity to the aggregation and utilization.

The listed items above are just the main applications. However, the characteristics show promise for many area that support T&D as well.

3.9.3.5 Links to Smart Grid in California

There are definite links to the technology between infrastructure, controls, tools, and the vehicles. PHEVs' and EVs' main functionality are transportation. Hence, for some manufacturers, the vehicles will be sold simply as transportation devices. The infrastructure and tools, such as smart charging, will be provided by other companies and developers. For PHEVs to be used as anything other than a simple load addition to the grid, links to other technologies will need to be developed such as:

- Charging stations.
- Billing and tariff infrastructure.
- Aggregation tools.

Each of these areas will require focused effort and contributions from state agencies, auto manufacturers, federal agencies, and municipalities, to name a few.

3.9.3.6 Role in Increasing Renewables in California

PHEVs and EVs may be considered a renewable technology on their own when providing power to the grid. However, outside of the issue of asset classification, PHEVs may be able to act as storage devices and provide response capabilities to the grid in order to ease renewable implementation as well as functions such as ramping. Devices may actually contribute to increasing home use of renewable technologies, such as solar devices.

3.9.4 Market Data

3.9.4.1 Market Trends

Technologies are very similar for PHEVs among auto manufacturers. As all United States, European, and Asian auto manufacturers are planning roll-outs for PHEVs, similar market dynamics to the sale of traditional vehicles can be expected to be witnessed. Consumers will have a number of choices and options from which to select for their vehicle.

On the infrastructure sides, there are key differences in the early providers of smart charging tools.

For smart charging, there are differences in approaches that are being proposed.

- *Controlling charging at the power station*: Under this scenario, charging, billing, and *cutting off* power in response to grid needs are controlled at the charging station itself. Billing will be the responsibility of the owner of the charging station and the station will have the ability to simply cut off its power if signaled to do so.
- *Controlling charging at the battery*: Under this scenario, batteries in the PHEV can be monitored and tracked from a central location. If there is a need to shed load, based on a signal from grid operations, the battery is directed (through a switch) to stop charging.
- *Owning the battery*: A final alternative to the charging scenario is an independent, third-party player owning the battery and swapping batteries or controlling the charging on his/her own.

3.9.4.2 Market Barriers

There are two main categories of market barriers for PHEVs. One is related to infrastructure and the other is the market and market penetration itself.

- Infrastructure
    - Charging stations: For commercial charging to occur, cities will need numerous (thousands) of charging stations in key locations, such as at service stations, parking lots, or office buildings.
    - 240 volts versus 120 volts: Whether at residences or at commercial locations, vehicles need to charge at 240 volts, greater than 30 amps to be a benefit to the smart grid. At 120 volts, vehicle charging times for a full charge can range up to seven hours in

length. At 240 volts, charging times can be dramatically reduced to two hours or less. During the day and evenings, vehicles remain parked for long periods of time; the flexibility provided by the higher voltages will enable DSM, load response, and flexibility to PHEV charging.

- Markets

  Typical United States penetration: Estimates for penetration in the United States look to 2017 for appreciable levels of PHEVs to be on the road. This can be sped up through government incentives or *shocks,* like the gasoline price spike witnessed in the summer of 2008. However, PHEVs still cost more than traditional vehicles and have not yet matched the long duration performance characteristics.

  - *Timeline to mass penetration*: Currently, the market is looking at 2017, though it can be expected that California will lead this market penetration and metropolitan areas will see most of the initial concentration.
  - *Cost of Vehicles*: Though life-cycle costs vary with the price of avoided fuel, generally PHEVs are still more expensive to own than traditional vehicles.
  - *Incentives*: Losing current incentives to PHEVs will have a negative impact to market penetration and the timeline to large-scale penetration.

3.9.4.3 Saturation of Technology

Vehicles: The market is still relatively small as it is still dominated by hybrid EVs, such as the Prius. To date, there have been over one million sold in the United States. Battery size for these vehicles is around 2 kW, and they cannot be used for advanced applications. PHEVs have been targeted for the 2010 to 2012 rollout timeframe with large penetration expected in 2017.

Ancillary equipment: Smart charging firms are just beginning to enter the marketplace, but they are also in the development and concept stages of the lifecycle curve. For revenues, these firms are directly tied to the penetration rates of PHEVs and EVs before they can be expected to gain revenues from their applications.

3.9.4.4 Current United States Sales Penetration Projections

Current United States Sales' projections are summarized below:

- Initial market entry period from 2009 to 2012
  - 50,000–200,000 vehicles sold by 4–8 manufacturers
- Mid-market growth period from 2012 to 2017
  - 1,000,000 sold by 2017
- Mature market period from 2017 to 2030
  - Expected to stabilize at 30%–40% penetration of PHEVs of LVF market or 60 to 80 million vehicles.

It should be noted that gas prices can have significant impact on all growth projections.

3.9.4.5 Existing Players in This Space

A list of PHEVs' and HEVs' manufacturers—some common leading manufacturers in the market—have been listed with their battery types and leading product lines in table 14. Table 15 lists companies specializing in charging infrastructure.

Table 14. List of manufacturers of PHEVs and EVs

OEM PEV Announcements								
Year	**OEM**	**Vehicle type**	**Vehicle**	**Battery manufacturer**	**Battery size**	**All electric range**	**Charger type**	**Expected volume**
2009	Tesla	BEV	Roadster	Tesla		250 miles		Very limited production
	Fisker	PHEV	Karma (sedan)			50 miles		Planned to reach 15,000/yr.
	Toyota	PHEV	Prius	Panasonic		10 miles	120 v 15 amp; 240 v 30 amp	Introduction, limited 2010 sales
2010	GM	EREV	Chevy Volt	LG/GM	16 kWh	40 miles	120 v 15 amp; 240 v 30 amp	Limited sales, expected to be initially 10,000/yr.
	GM	PHEV	Saturn View	LG/GM	8 kWh	TBD miles	120 v 15 amp	Limited sales, TBD
	Ford	PHEV	Escape	JCS		30 miles	120 v 15 amp; 240 v 30 amp	Electric utility PHEV demo
	Ford	BEV	Transit Connect (BEV van)					Battery EV commercial van
	Chrysler	BEV	Dodge Circuit	A123 Systems	30 kWh	150-200 miles	120 v 15 amp; 240 v 30 amp	2-passenger, high performance
	BYD (China)	PHEV	F3DM	BYD	25-35 kWh	60 miles	Type 2(?)	First release in China, US in 2010
	BYD (China)	BEV	E6	BYD		180 miles		Release in China
	Think	BEV	Urban runabout (2-seat)			112 miles		First year in US-2,500 cars; eventual plan is 60,000/yr.
2011	Nissan	BEV	Small car	Nissan/NEC JV	25-30 kWh	100 miles		40,000 vehicles for each of 1st 2 years
	Ford	BEV	Not defined			~100 miles (TBD)		

OEM PEV Announcements								
Year	OEM	Vehicle type	Vehicle	Battery manufacturer	Battery size	All electric range	Charger type	Expected volume
	Tesla	BEV	Model S (sedan)	Tesla		150-300 miles		
2012	Ford	PHEV		JCS				

Notes: KEMA

1. Chrysler's ENVI division has announced that it is developing five different EV models; the Dodge Circuit will be released in 2010; no dates have been announced for the other vehicles.

2. BYD has indicated that it intends to produce as many as 300,000 EV vehicles for the global market by the third year of production.

3. Ford's plans include the 2010 BEV Transit Connect van in conjunction with Smith Electric, and the 2011 BEV developed in conjunction with Magna (Canada), and demonstrated on a Ford Focus platform; Ford has not announced the platform for that vehicle; JCS has been announced for the PHEV demonstrations, but no announcements have been made for commercial vehicles; total production in the range of 10,000 vehicles has been discussed.

4. For PHEVs, since the engine is generally running, "all electric range" may not be a valid measure of performance.

5. Other than the numbers above, OEMs have not announced production targets.

Table 15. List of smart charging companies

Company	Technology	Emerging / mature	Current penetration levels	Market share
Coulomb Technologies	Charging devices	Emerging	Introductions–2010	0%
Plans on offering ancillary services, such as participation in DR and battery monitoring				
Grid Point (V-2Green)	Charging services	Emerging	Introductions–2010	0%
Plans on offering a charging service that will help integrate batteries into the grid— control is at the battery level.				
Better Place	Battery aggregator	Emerging	Introductions–2010-2011	0%
Owns the battery and acts as a battery aggregator to pursue additional services. Targeting cities such as San Francisco and Honolulu.				

Source: KEMA

CHAPTER 4:
Market Trends and Growth Patterns in Smart Grid Technologies

In this chapter, the authors focus on key elements of the smart grid solution and outline key market trends and growth patterns in these technologies.

4.1 Stimulus Package

Though each of the technology areas have their own path and trends for development into essential components of smart grids, this section provides an overview of the 2009 Stimulus Package and the impact this package will have on smart grid implementation.

President Obama's administration has indicated significant support for smart grid technologies, calling for the installation of 40 million smart meters and 3,000 miles of transmission lines.[20] On February 13, 2009, the Congress approved a $787 billion stimulus plan known as the American Recovery and Reinvestment Act of 2009. President Obama signed the bill into law on February 17, 2009. The bill contains hundreds of provisions, but a large amount of its funding is slated for electricity grid improvements, energy efficiency, and renewable programs.

Smart Grid: The bill included $4.4 billion to support a Smart Grid Investment Program, including a regional demonstration initiative and a matching grant program for qualifying smart grid investments. California utilities and technology companies, such as Silver Spring Networks, Trilliant, eMeter and Itron, would likely qualify for the matching funds under the stimulus plan.

Renewable and Efficient Energy: There are substantial incentives to jolt renewable energy development, including $16 billion in tax credits for renewable projects, $4 billion in renewable energy and conservation bonds, and 30% tax credits for manufacturers that produce renewable energy components. The renewable tax credits will guarantee California renewables developers, such as enXco, a three-year extension of tax credits for wind projects and allow companies to take a *carry-back* against prior profits. It will also allow California consumers to take tax credits for up to 30% of the cost of their small renewable systems. The bonds will enable California state and local governments to raise money for renewable energy and conservation projects by issuing bonds backed by the government. The manufacturer tax credit gives California companies, such as Sunpower and Optisolar, a 30% tax credit on new investments.

Research and Development: The bill also includes $6 billion in loan guarantees for proven renewable technologies and transmission technologies. In addition, $2.5 billion will go to R&D of renewable and efficient energy technologies.

---

[20] CNN Money. January 27, 2009.
http://money.cnn.com/news/newsfeeds/gigaom/green/2009_01_26_faq_smart_grid.html

Advanced Vehicle: There is $2 billion in government grants to fund advanced vehicle manufacturing. This funding will incentivize domestic manufacturing of advanced batteries in order to build a globally competitive battery manufacturing workforce. In addition, there will be a 50% tax credit for purchasing alternative refueling stations and a tax credit for plug-in electric vehicle conversion.

Table 16: Economic stimulus bill energy provisions[21]

Category	Description	Cost ($ millions)
Energy	Home weatherization grants to low- and middle-income families	$5,000
Energy	Funding for Energy Star® Program offering tax credits to consumers purchasing new, efficient appliances	$300
Energy	Advanced batteries manufacturing grants	$2,000
Energy	Energy-efficiency grants to states and local governments	$6,300
Energy	Transport electrification grants	$400
Energy	Funding for states and local governments to buy efficient alternative fuel buses and trucks	$300
Energy	Research and development of renewable and efficient energy technology	$2,500
Energy	Loan guarantees for standard renewables	$4,000
Energy	Transmission loan guarantees	$2,000
Energy	Fossil energy research and development	$1,000
Energy	Research into low-emission coal plants	$800
Energy	Grants for industrial carbon capture and energy efficiency improvement projects	$1,520
Energy	Grants for identifying sites to store carbon dioxide emissions	$50
Energy	Grants for training and research on safe storage of carbon emission	$20
Energy	Administration of funding program	$10
Energy	Physics research, including high-energy physics, nuclear physics, and fusion energy sciences	$1,600
Energy	High-risk research into energy sources and energy efficiency	$400
Energy	Cleanup of former nuclear sites	$483
Energy	Uranium enrichment decontamination and decommissioning	$390
Energy	Cleanup of former nuclear defense sites	$5,127

[21] *The Wall Street Journal*, February 14, 2009. http://online.wsj.com/article/SB123458384689487271.html

Category	Description	Cost ($ millions)
Energy	Money for federal power marketing administrations in electric power transmission systems	$6,500
Energy	Construction and repairs for federal marketing administration	$10
Energy	Modernization of the electric grid	$4,400
Energy	Training of electric grid workers	$100
Energy	Oversight of Energy Department spending	$15
Energy spending		**$45,225**
Manufacturing tax cuts	Facilities making advanced energy property may be able to claim a new 30% investment tax credit	$1,647
Energy tax cuts	Extending the placed-in-service date for renewable energy investments by three years	$13,143
Energy tax cuts	Investment credits in lieu of production credits for renewable energy purchases	$285
Energy tax cuts	Removal of cap on tax credits for purchase of small wind systems	$604
Energy tax cuts	$1.6 billion extra allocation of clean energy bonds	$578
Energy tax cuts	$2.4 billion extra qualified energy conservation bonds	$803
Energy tax cuts	30% cap on tax credit for energy efficiency purchases by homeowners, up to $1500 per residence	$2,034
Energy tax cuts	Credit for purchase of residential solar, geothermal, wind, and fuel cells	$268
Energy tax cuts	50% tax credit for purchase of alternative refueling stations	$54
Energy tax cuts	Tax credit for plug-in electric vehicle conversion	$2,002
Energy tax cuts	Equalization of parking and transit tax-free employer benefits at $230 for 2009	$192
Energy tax cuts		**$21,610**

Source: KEMA

4.2 Intelligent Electronic Devices – (IEDs)

There are several key trends affecting IED technologies and market adoption including:

- Continued decline in volumes of electromechanical relay direct replacements in kind.
- Replacement of first-generation of microprocessor-based relays installed in the 1980s and early 1990s necessitating major replacement programs, usually with IED-based multifunction relays.
- Adoption of IEC 61850 as a platform for SA and communications.

- Development of multi-function IEDs for asset condition monitoring and a trend towards ordering all new power transformers (and high-voltage circuit breakers) with ports for condition monitoring.
- Deployment of back-office applications capable of using non-operational data, which enhances the business case for relay replacement with IEDs.
- An understanding of how NERC Critical Infrastructure Protocol (CIP) standards and cyber-security concerns affect IED connection to substation networks.
- Use of electromechanical relays to be phased out with retirement of the engineers who originally installed them. Trend towards new IEDs means there will be a significant learning curve for new engineers to master the old EM equipment.
- General adoption of IEDs and substation computers in all new substations.

Of these trends, the most significant is the adoption of IEC 61850, which promises that IEDs installed this year and next year will be compatible with future SA projects, even if they are installed without immediate intention to utilize non-operational data. One key selling point of IEC 61850 that is not apparent yet is the next generation of engineering tools that will be available for configuring SA and protection. All key data is stored in XML, so tools can be developed based on the common IEC 61850 data formats.

Electromechanical relays are still procured as replacements in kind when field equipment fails, due to the short-term cost of replacement over digital relays (often related to wiring/mounting and having to re-engineer protection). However, over time more and more still EM-based substations or particular protection applications are converted to digital as part of retrofits and upgrades. For example, 90% of new protective relays being purchased in North America are digital relays.[22] Another important trend is to build additional functionalities into protective relay devices. **Error! Reference source not found.** 29 shows that 30% of utility companies in North America have already moved to relying exclusively on digital relays for some power quality monitoring needs and another 50% are moving towards this reliance.

[22] Newton-Evans research

Figure 29. Shift from dedicated event recorders to IEDs

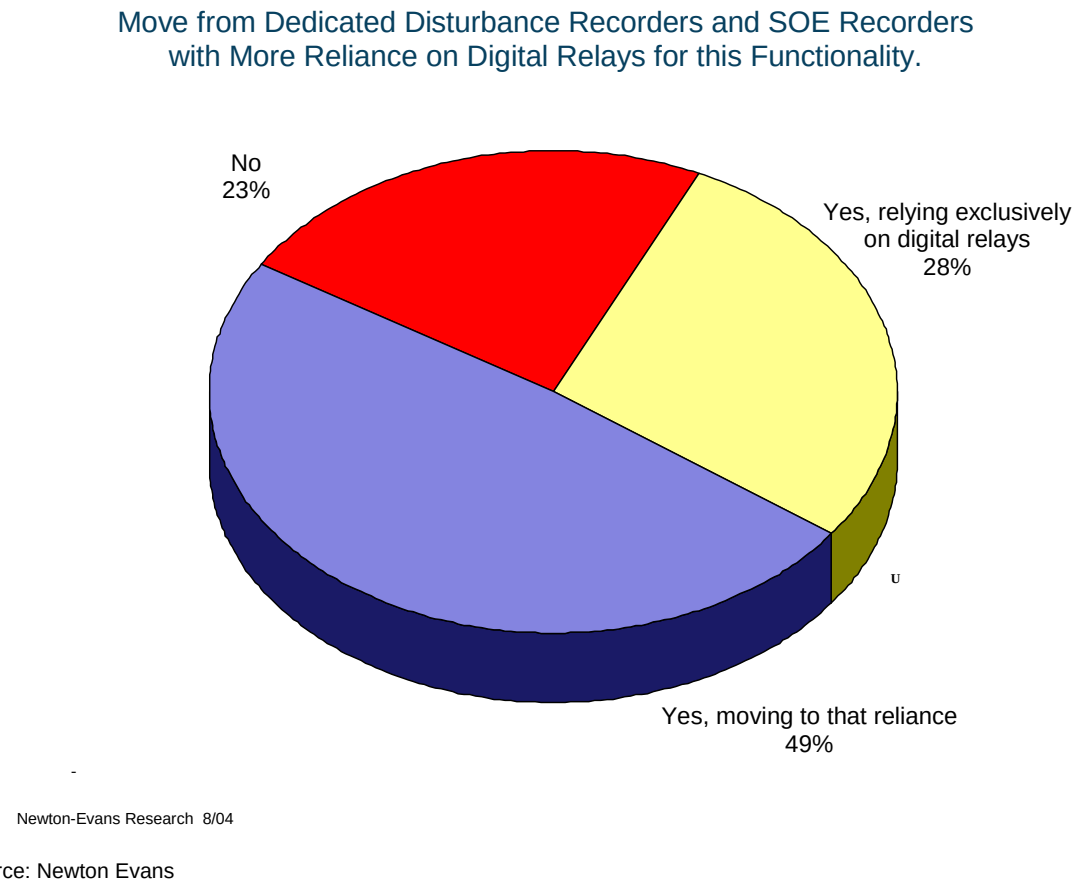

Source: Newton Evans

The few utilities with widespread installed bases of electrostatic protection (solid-state electronic component-based products) are faced with (premature) end-of-life reliability problems, such as PC board delaminating (which causes solder joint failures) and failure of on-board capacitors due to electrolyte leakage (capacitors in power supplies are a big issue). These utilities are faced with the need to aggressively convert a large number of substations to digital protection in a short time or risk simultaneous, multiple failures, which could result in equipment damage or loss of service.

IEDs that perform asset condition monitoring, especially transformer monitors, are becoming multi-functional so that the total acquisition and installation cost drops when all condition monitoring possibilities are considered. Also, most utilities accept the value of condition monitoring and increasingly order power transformers with ports for these devices, even if they do not order/install the devices immediately on new equipment. Over time, as the power transformer fleet is replaced (many United States power transformers are at or beyond their nominal 40-year lifetimes); condition monitoring therefore will grow in penetration.

Many vendors, such as ABB, had condition monitoring add-ons for transformers and circuit breakers in the 1990s. Anecdotal evidence suggests that many utility customers had problems

with the built-in diagnostics to the point that this feature was removed in many instances. This resulted in vendors having difficulty selling transformer monitoring retrofits in the United States in the early 2000s. However, there are still no technologies available for some condition monitoring functionality, such as oil dissolved gas measurement, that do not require an access port. Therefore, retrofitting condition monitors to existing units without ports remains expensive.

A unique condition monitoring technology that exploits BPL communications is the use of RF signals on the power line as a way to detect incipient insulation breakdown. The technology of *partial discharge* analysis has been used for several years as a way to detect incipient insulation breakdown in underground HV cables, and recently this technology has been made available on-line.[23] Partial discharge detection online with localization (PDOL) technology still has a cost factor that reserves its usage to underground HV cables where the cost of a failure and total repair (as opposed to locating a weak spot and effecting a splice repair) is significant. However, PDOL technology may also be worthwhile on 1–2% of critical mega volt (MV) cable systems as well. BPL inherently includes chips on field devices that are capable of analyzing RF signals. Some laboratory demonstrations have shown the ability to detect partial discharge (PD) in BPL equipment. This holds out the possibility of using BPL apparatus to detect PD on overhead apparatus as well as subdivision underground cable, insulators, and other lower value apparatus. However, BPL has fallen behind in the smart grid contest over communications technologies despite these kinds of value-added possibilities. Today, it is hard to identify a trend towards development of BPL-based condition monitoring.

When NERC CIPs were first proposed, there was a lack of understanding on the part of some utilities. A common belief was that NERC-compliant access to IEDs for non-operational data would be expensive and problematic. The confusion lies with the definition of critical assets and cyber critical assets as they relate to IP-based devices. All utilities have since committed to programs to resolve these issues and deploy substation communications while ensuring compliance to the CIP standards.

Installation of IEDs as replacements for EM relays in other applications than simple single function applications (that is, bus, transformer, or transmission protection versus distribution over current, for example) are, as noted, more difficult and expensive due to rewiring and cabinet needs. These are applications where cost justifications for replacement with IEDs hinges on the usage of non-operational data and the ability to dynamically change settings remotely. These benefits are only realized when utilities are able to make use of these capabilities in the back office with asset management and network analytics software. The IEDs and back-office applications are thus in a chicken-and-egg situation where the economic case for either depends on the other.

[23] For example, KEMA's PD detection On-line with Localization (PD-OL) system currently enables continuous on-line cable monitoring. The KEMA PD-OL system is primarily used on medium voltage cables in conjunction with ring main units.

In recent years, a number of applications in support of asset management decision making have come on the market. As these are deployed and asset data collected on an increasingly wider base of assets, the rules and algorithms for decision making have a better possibility of proving their value. While there are few reported cases of utilities actually using the capability to remotely download protection settings, several are verifying settings remotely. As control room applications, such as distribution load flow, become more typical, the possibility of performing short-circuit calculations based on assessments of field data also becomes real.

So far the authors have not seen product development or product announcements specifically aimed at inverter-based resources, either at the transmission or distribution level. This may be a result of another chicken-and-egg situation; today, the interconnection standards imposed on renewable and distributed resources are conservative and are motivated to ensure that short-circuit, harmonic, and voltage problems are minimized.

The development of fault-current limiters (FCLs) for secondary network applications, seen today as a future requirement in urban underground networks, is not progressing as rapidly as might be desired. Today, this is an issue for major urban utilities where integration of building DG and storage imposes higher fault currents and FCLs are needed. FCLs will also facilitate the development of microgrids and bidirectional distribution circuit flows, possibly also on radial circuits. There is not a consensus on the applicability or need for these devices in the industry today.

The particular IED synchrophasor or PMU is a special case. The U.S. DOE Wide Area Monitoring System (WAMS) project is leading to the development of control algorithms for utilizing the data from synchrophasors. California is leading the nation in the deployment of these systems and is well-positioned to make use of them for monitoring and controlling problems arising from high renewable levels as the analytic methodologies and control algorithms are developed.

4.2.1 Relevance of Trends for California

The lack of both IEDs and analysis/control algorithms targeted at inverter-based resources and bidirectional power flows is a worrisome factor for California. The high levels of renewables stated as a state goal will inevitably require significant amounts of *behind the meter* and distribution circuit-based DG, and new operations and protection systems will be required to integrate these.

California can expect to see an increased deployment of microgrids as a result of state standards for self-sufficiency of new residential and commercial developments. Therefore, the protection devices, control algorithms, and possibly fault-current limiters are important technology developments that California can expect to need ahead of most of the country.

The strong state support for synchrophasor development has proven itself to be prescient. High renewable penetration inevitably will bring increased transient and dynamic stability issues to the fore, as the rotating inertia of the state generation relative to total load plateaus and even declines in some locales. Synchrophasors will play an important role in coping with this trend.

It is the authors' understanding that several California utilities are already committed to IEC 61850 as a future platform. LADWP, however, does not use IEC 61850 and has no current plans to adopt this standard. Additionally, the authors believe that none of these utilities are faced with the problem of large installed bases of electrostatic devices. As noted in the section on the current state of affairs in California, IEDs are already accepted, and most utilities have programs under way for transition to digital IEDs.

The major California utilities have not selected BPL as a smart grid communications technology, and thus the issues of BPL applications for PD detection are moot in California today.

4.3 Application Support Systems

The applications' support systems of interest include distribution control room applications for network analysis and control, outage detection, back-office applications for network design and analysis, and asset management. Meter data management and energy dashboards are important smart grid applications of interest in that consumer decisions to invest in DG or to participate in DR programs will depend upon the ready availability, cost, and convenience of these systems.

One major trend of the past decade has been the migration of these applications from DEC VMS and UNIX-based platforms to increasingly Microsoft Windows-based platforms. In the context of this analysis, this trend generally has positive cost factors for deployment and integration and possibly negative cyber-security factors. However, the cost factors are not significant issues in applications' adoption or development.

Another continuous trend in this domain is the entrance of new start-up or smaller firms into the space as drivers for new algorithms and methodologies and the resulting reaction of the product divisions of larger firms, such as GE, Siemens, and ABB. The Information Technology (IT) industry has entered this space—IBM owns a major asset management product (Maximo™) and Oracle acquired SPL World Group, which includes meter data and billing as well as outage management (Centricity) applications. Microsoft has a utilities vertical group, which is so far not deploying specific applications. Most interestingly, Google recently announced Google *Power Meter*™, which is a free web-based energy dashboard for residential customers. A key issue for IT entrants, such as Oracle, SAP, or Google, will be the development and acceptance of open smart grid protocols, at least for meters. The federal stimulus package requires smart grid projects to "utilize open standards and protocols when available" as a requirement for matching funds.

The major utility industry suppliers—ABB, Areva GE, Siemens—continue to see the control room as *SCADA-centric* and look for the tight integration of other analytic applications with their SCADA systems. However, the industry trend is a movement towards looser integration, which favors integration of third-party applications.

Control room applications today make no special provisions for renewable resources—in terms of forecasting, scheduling, and monitoring (other than via normal SCADA operations), and in terms of on-line analytics assessing short-circuit duties, harmonics, or other renewables-induced phenomena. Wind farm developers typically rely on simple SCADA systems from turbine

manufacturers. The SCADA industry is just beginning to think about wind management systems for large wind operators, but there is hardly an industry sense of all the applications needed. Some SCADA manufacturers have expressed interest in this domain as a new vertical market they can enter.

Back-office applications typically focus on harmonic studies, short-circuit studies, and load flows used in planning and incident review. These applications are *deterministic* today and are used for peak load and low load conditions typically. As such, they do not have specific provisions for renewables, especially the inherent volatility of renewable production. While the models exist to study harmonics from a renewable inverter, the ability of applications to model large combinations of inverters on one circuit and possible interactions is dubious.

These applications are typically designed for unidirectional radial flow and will need adaptations for bidirectional flow. The industry emphasis in recent years has been on integration of these suites with operational data and geographic information systems—which are all good for renewables integration as well—but few product offerings specific to renewables and DG have been announced.

4.3.1 Relevance of Trends for California

The utilities will definitely require real-time and back-office tools with capabilities to analyze the distribution feeder circuits under these conditions in order to support high renewables penetration and bidirectional flow. The nature of the industry that supports these applications is such that the suppliers will likely respond aggressively to utility needs with product releases provided that the requirements are understood. The estimated cost of these applications is less than $10 million per utility, so while non-trivial, they are not major obstacles.

4.4 Building Automation

Building automation systems (BAS) are mature products with a large number of suppliers as well as a tendency towards proprietary systems. The primary focus has historically been internal to buildings and not to communicate or integrate externally. Although control systems offer a great deal of information on energy use, linking them to the smart grid or AMI meters may be problematic for future use.

The primary market barriers for BAS are adoption and widespread use of interoperable standards. Additionally, developing a common interface between grid and building management is required. The balance between local versus central management must be achieved to overcome fears of external control situations. Use of local metering must be overcome to prevent accuracy issue dispute. Recent improvements to BAS generally pertained to the control algorithms to optimize building energy usage, remote wireless sensors and controls' usage as well extension of human interfaces to energy managers' mobile devices. In terms of communications, the industry is moving towards using shared data services over Ethernet rather than hard-wired systems. In addition, the industry is paying attention to holistic integration of controls and building management and BASs' linkage to green-building initiatives, such as LEED.

4.4.1 Relevance of Trends for California

California utilities are well down the path of AMI with specific vendors, but these systems will need to be able to easily exchange data with a smart grid. Recent Energy Commission PIER research has examined the potential for DR in large facilities through the use of automation.[24] Although these reports document extensive research on auto-DR within large facilities, there remains little mention of how BAS may interact with the smart grid.

The 2008 California Title 24 Building Standards require certain control system strategies, such as HVAC system controls, but full EMSs are not required. This is unique to California and may facilitate future BAS implementation. It remains, however, a significant challenge to get building managers to understand and implement BAS.

Other PIER research[25] has evaluated the potential of different BAS technologies to promote additional energy savings, but little research appears to have focused on BAS technologies that would facilitate interaction with AMI to allow the utility to control operations at the end-user facility.

4.5 Home Area Network (HAN) Technologies

HANs have been moving towards the following trends:

- **Open architecture:** The industry prefers open architecture to save system development cost. Open architecture allows new features to be added to an existing system without upgrading the entire system. Also, open architecture mitigates the risk of proprietary and standalone monolithic systems from a single manufacturer. It allows utilities to procure different parts of the system from different vendors as long as they comply with the same industry standards. Since HAN is relatively new compared to building automation systems, the industry does not have as much problem dealing with legacy systems.

---

[24] Piette, M.A. *Development and Evaluation of Fully Automated Demand Response in Large Facilities*. PIER Project Report. CEC-500-2005-013.

[25] Norm Bourassa, PIER Buildings Program

- **Interoperability:** Interoperability allows the inclusion of multiple HAN devices. It enhances value and broad appeal of the network. It should also allow easy installs; however, the industry currently does not have a standard for manufacturers to develop systems that can plug-and-play in the HAN system. In 2008, ZigBee started to certify products that can coexist in ZigBee network environments designed by the end user. It is also working with HomePlug to develop a common application layer integrated solution for HANs. Standardization will help develop the HAN market as it alleviates concerns from manufacturers who might be tempted to wait until clear industry specifications emerge.

Google has developed a software tool, called Google PowerMeter, which draws real-time data from utility smart meters and energy management devices to give people access to their home electricity consumption. The tool is free and scalable, and there are plans to release the technical specifications (application programming interfaces or API), so anyone can build applications from it. Google is working with utilities and in-home energy device manufacturers to expand its PowerMeter beta program.

The distributed energy industry, especially inverter manufacturers, has started to explore integration of DG renewables into HAN. Although inverter manufacturers working with utility integration projects can offer communication options, there are no concerted efforts in developing a standard approach utility interface. In 2007, the U.S. DOE selected 12 industry teams to provide R&D for the Solar Energy Grid Integration Systems (SEGIS) program. The program leverages $2.9 million in DOE funding with $1.7 million of industry cost-share to develop products that will allow PV to become a more integral part of household and commercial smart energy systems. The list of selected projects can be found at http://www.energy.gov/news/6477.htm.

4.5.1 Relevance of Trends for California

All of the major utilities are or planning to include HANs as part of their smart grid implementation. The ZigBee wireless communications protocol is emerging as the standard protocol for HAN-enabled meters and devices. PG&E and SCE selected ZigBee as their current wireless HAN option, due in part to the feeling that the alternatives bring large risks and development issues (i.e., ZigBee has standards and a growth path for the development of applications and in-home technologies). However, there may be concerns that ZigBee could potentially preclude the growth of applications and technologies because of its proprietary nature.

Utility preference would be for standard network wireless-LAN technologies already in use in almost any consumer home network worldwide. PG&E is concerned, however, about the ability to deploy their HAN functions securely and reliably upon that platform. Their concerns include security due to the need for a fairly powerful signal to penetrate home walls. Since consumers have already adopted as a de-facto standard the wireless technology that is cheap and widely available, it will likely be a significant uphill battle for utilities to try to overlay another in-home communication network that will work interactively with their computers, cell phones, and PDA's, among other devices.

PG&E is also very interested in WiMax as a promising emerging communications' technology. There is interest in testing this technology as an option for high-density areas. It may be capable of providing a backbone for AMI/AMR in otherwise challenging areas and could support HAN technologies without an additional communication system.

In 2009, Google filed comments with the California Public Utilities Commission (CPUC) under the smart grid proceeding to urge the Commission to continue the development of smart grid capabilities in California and to adopt policies that direct the provision of electricity usage data to consumers in real time. It also recommends that one of the principles that should guide the Commission's decisions in this proceeding is the interoperability of a smart grid with end-user services that will facilitate consumer demand management. At this point, it is not clear what communications protocol Google PowerMeter is planning to use and whether it might interfere with the California utilities' ZigBee HAN.

As the California Solar Initiative (CSI) plans to install 3 gigawatts (GW) of solar by 2017, utilities are looking for ways to better monitor the performance of these ratepayer-subsidized systems. In 2008, the CSI program administrators contracted KEMA to determine the most effective way of integrating CSI's metering with California's AMI. It is envisioned that the AMI systems can provide the necessary infrastructure, possibly through HAN, to readily and reliably deliver information to customers, the utilities, and other authorized end users with appropriate permission and access privileges. KEMA expected to complete the report by the summer of 2009.

4.6 Substation Automation and Communication Systems

The major market trend in SA is the movement by all suppliers to support IEC 61850 and DNP 3.0 as a SCADA protocol. Many suppliers offer translators to translate many legacy protocols to DNP. The major utility suppliers (ABB, GE, Siemens, and SEL) all offer comprehensive SA products as well as a number of smaller focused organizations. Total utility spending for 2008 on SA products has been estimated at almost $400 million.[26]

ASA trend for renewables support includes the ability for the utility to custom develop PLC applications to control, for instance, storage. The authors are not aware of any SA applications that can locally change protection settings based on dynamic conditions with respect to renewables, however. The trend of utility developed station-specific PLC applications would have to be described as at an early adopter level.

SA applications tailored to stations dedicated to renewables interconnection (as at a wind farm) are not available as standard products today.

4.6.1 Relevance of Trends for California

The major California utilities are proceeding with SA projects to test the technologies. LADWP has initiated SA at 60 of their targeted 120 substations. They have replaced EM relays with Schweitzer digital relays and are utilizing a proprietary IED protocol. Although in theory

[26] Newton Evans. *2008 Siemens PTD Market Sizing Study,* December 2007.

LADWP has SA in place at these sites, it is not believed to be operating according to its potential.

In California, it is believed that the basic hardware (HW), software (SW), and communications platforms are in place, even if components may need upgrades to enable elements, such as utility-developed applications. The key issue will be the appearance on the market of special SA applications for renewables integration and the ease of retrofit of those applications.

4.7 Feeder Automation and Distributed Intelligence

Products such as S&C Intelliteam have gained considerable momentum in the market. More and more utilities are deploying targeted FA systems, distributed or centralized at substations as primary tools to reduce outage and restoration times. Feeder-load balancing is perhaps not accelerating as quickly, due to its dependence upon alternate feeds and the ability of a utility to add load to adjacent feeders—but it is applicable in specific instances.

Fuse saving, while not accepted by all utilities, is an example of dynamically changing protection settings (the system operator enables protection to use a storm setting) and as such is a precursor to the need for dynamic protection settings for renewables.

Fault-current indicators (FCI) are not bidirectional today, but can be deployed to help locate faults as an adjunct to the fault distance reading from digital protection. More and more utilities are making use of fault distance readings on overcurrent feeder relays to assist crews in fault location and restoration. Few utilities are avoiding the step of the crew visit the station as a first step, however, primarily for safety reasons.

The use of advanced communications' technologies has reduced the cost of SCADA to access FCI data or Intelliteam coordination and lowered the barriers to adoption.

Fuses and FCIs are inherently bidirectional—they do not care which direction the fault current is flowing. However, bidirectional power flows may necessitate different coordination and settings for these devices depending upon the direction of flow and fault location. Coordination of fuse selection with renewable fault protection may become an issue in the future. The authors are not aware of any applications that have considered this issue.

Similarly, Intelliteam (as an example) is inherently capable of operating in a bidirectional environment; since post-FLISR operations, the flows to the restored branch are often reversed. However, the Intelliteam logic in the apparatus that determines needed switching operations is not self-adapting to different conditions.

4.7.1 Relevance of Trends for California

In California, LADWP has no current efforts to implement FA. They completed a pilot program three years ago to prove the feasibility of using cell phone technology to communicate with pole-top RTUs. Although the technology had the ability to control, the pilot program did not evaluate that functionality. The results of the pilot showed that this technology would work very well.

LADWP also evaluated the potential of using BPL, but had significant issues related to being able to communicate over underground cables. No issues were encountered with overhead cables. The BPL signal also did not go through transformers, but there is a work-around that is possible, but not ideal. A key finding from this study was that vendors had promised that their products could deliver these capabilities, but the demonstration showed that this was not true.

FA technologies as described above do not allow for a bidirectional environment. Some of the technologies deployed today are not obviously compatible with a bidirectional environment. What new technologies will replace these and how they may be deployed are not evident.

4.8 Electricity Storage

It is once again noted that this study focuses on advanced storage devices. Pumped hydro system or large storage systems such as Compressed Air Energy Storage (CAES) are and can be utilized as well, but the devices that are being contemplated for smart grid are advanced storage devices that demonstrate a fast-response characteristic.

Currently, the markets where storage devices are advancing are for ancillary services in combination with renewable energy projects, T&D applications, and customer-sided applications. A breakdown of the markets trends are listed below:

- **Ancillary Services:** This market is showing the greatest interest for two main reasons: (1) short duration (15-30 minute) devices are able to effectively serve the market, and (2) it is an active, competitive market that allows merchant plant operators to potentially profit from the application. This market is not the capacity leader in applications, but is currently seeing the most activity from a variety of storage devices that include flywheels, lithium-ion batteries, and flow batteries As *loads as a resource* (for ancillary services) gain increasing attention, low-tech storage devices, such as thermal storage, are also beginning to reflect the potential to be applied to this field.
- **Transmission and Distribution:** This is the area where the largest amounts of MWs are currently being applied. This lead may not last if storage can effectively operate in the ancillary services market; ancillary services will soon dominate. However, for this application, storage is used for improvements to reliability, peak savings, deferral of substation improvements, and load shaping. These applications typically require longer duration devices. Hence, it is currently dominated by flow batteries, such as NGK's sodium-sulfur device.
- **Renewable Integration:** Though California has not seen this application applied, storage is being proposed and tested in combination with renewable systems. The main focus for storage is with ramping issues of solar or wind applications to allow developers to meet potential power purchase agreement requirements. This application also tends to require shorter duration devices. However, as additional applications appear as market opportunities such as energy arbitrage or congestion relief (discharging once grid congestion has dissipated), longer duration devices (2–5 hours) may have a better fit since they will allow operators to gain additional revenue for the application.

- **Customer-Sided Application:** This application is just now beginning to be explored and is currently not being tested in the United States. The concept is as the capacity of devices increases, duration of the devices extends into the 2-5 hour ranges; and as cycles increase to 7,000 to 20,000, the devices may be used as facility back-up generation devices. The advantage of this application is that it has the potential to replace diesel back-up generators and even contribute to load response, as back-up generation would no longer have emission restrictions.

4.8.1 Applications of Devices

The following section describes where market trend applications are currently being tested in the United States.

4.8.1.1 Ancillary Services

- **The AES Corporation:** AES is focusing on ancillary services, such as frequency regulation and spinning reserve. They are using lithium-ion batteries from manufacturers including Altairnano and A123. Tests have occurred in Indiana where two 1 MW units were demonstrated for their ability to respond to Automatic Generation Control (AGC) signals. A test is currently being conducted with A123's 2 MW unit at their power plant in Huntington Beach, California; and the Altairnano unit is being tested in PJM territory as well.

- **Beacon Power:** Beacon makes a Flywheel device and is making significant contributions to advancing the ancillary services market for flywheels as well as other storage devices. Their work and testing—which included projects in California, New York, and currently in Massachusetts—is paving the way for independent system operators (ISOs) to explore the benefits of fast-response storage devices for frequency regulation. The efforts are allowing ISOs to better understand the technology and investigate adjustments to AGC signals to take advantage of the technologies.

4.8.1.2 Transmission and Distribution

- **AEP:** This utility is demonstrating the use of sodium sulfur batteries, and has a total of 14 MW demonstrated in West Virginia, Indiana, and Ohio. Primarily for T&D applications, these applications facilitate reliability, peak shaving, and deferral of grid upgrades. While AEP is not a California utility, it has attracted great attention in the industry, and California utilities can be expected to watch AEP's projects for applicability and effectiveness.

- **SCE:** Though this project is over 10 years old, it shows that the concept has been active in Southern California. The benefits provided by advanced batteries are improved duration and the cycling capabilities. However, SCE installed a 10 MW lead-acid battery energy storage system (BESS) at its Chino substation facility in 1988. The BESS facility was used for load leveling and peaking functions.

4.8.1.3 Renewable Integration

- **Hawaii:** The state is requiring large renewable developers to incorporate storage into their projects, and implementations are currently occurring in Hawaii. The one project highlighted is on the island of Lanai, where a 1.2 MW solar power plant is combined with a battery storage system to assist with ramping issues and maintain grid reliability. This is the expected use of storage with renewables. However, for these applications, multiple uses of the storage devices do not seem to be the goal of the effort.

4.8.2 Relevance of Trends for California

Each of the applications listed above have relevance to California and renewables integration. In addition, promising technologies are being currently being tested in California.

The main storage activity has been with its use in ancillary services. This application is drawing a great deal of attention in California due to the profit potential of the application and its *fast-response* capabilities being able to be utilized for frequency regulation. In response, California's ISOs have been conducting a pilot workshop to understand the use of the technologies for ancillary services, AGC signals, and improved signals for battery operation. The focus of these efforts has been on shorter-duration technologies, such as lithium-ion batteries and flywheel applications that have 15–30 minute durations. Though flow batteries, such as zinc bromine, are not utilized in California, testing is just now being conducted in order to determine whether the flow batteries have the response time necessary to operate for ancillary services.

The ancillary services application is necessary, because it is believed that as renewable penetration rates increase, there is going to be an increasing need for ancillary services and storage will be able to fill that need.

For storage-renewable applications, the combination of renewables and storage that are being used in Hawaii also has significance to California. This is one of the prime applications contemplated for storage in assisting their integration to the grid. Such applications are now being tested in Hawaii. Hawaii is an island system with an increasing amount of intermittent renewables being installed. Hence, the theory will be tested first that increased renewables will require storage. In addition, the ability, size, and type of batteries that are being designed in the application will also provide insight into the effectiveness of advanced storage devices to assist with wind or solar grid integration.

4.9 Vehicle to Grid (V2G)

The premise of vehicle-to-grid and its relevance to assisting renewables' penetration are based on their batteries being utilized for new PHEVs and extended-range PHEVs, the same technologies being used for utility-scale, fast-response storage. Today, most auto-manufacturers are focusing on lithium-ion batteries for their PHEVs and EVs. Hence, the characteristics that make the storage application beneficial for ancillary services and renewable integration are present in each individual electric vehicle.

Though this is a valid concept, there are still gaps in the business concept of aggregating the individual autos in the volume necessary to contribute to this market. This is not considered a

barrier since aggregation applications are already ready present in today's market. There are no technological breakthroughs required for such an application to be utilized.

The fact that the lithium-ion batteries found in PHEVs can be utilized for the same applications as utility-scale lithium-ion devices has not be lost on potential third-party providers. The concept is being theorized by each utility that is expecting large penetration of PHEVs and EVs in their territories. In addition, firms that would have the ability to *aggregate* vehicles are already present in the market today. GridPoint (V2Green) and Coulomb Technologies both offer the ability to control battery charging and the individual devices. Aggregating the applications is not a stretch for such firms. In addition, the aggregation concept is currently being applied throughout the United States for applications, such as thermostat and air-conditioning controls. Companies like Comverge and EnerNoc already provide such services. Finally, new firms in this arena, such as Google or Microsoft, may see opportunities to provide such services as well.

Though a smart grid will be able to assist the applications, it is noted that such aggregation is occurring without smart grid with proprietary systems. However, it can be seen that with open systems, many more forms would be able to tap into the potential applications offered by *an aggregated PHEV or EV resource*.

4.9.1 Relevance of Trends for California

California is expected to be a leading market for PHEV vehicles. In fact, the cities of San Francisco, Oakland, and San Jose have announced a partnership that seeks to make the Bay Area the EV capital of the world. Hence, the ability of PHEVs and EVs to provide an aggregated load in a size large enough to be relevant can be expected to occur in California first. Such trends have been noted by the California ISO. For the storage pilot project, PHEVs have been included as a potential resource to be investigated, but the timeline when appreciable loads will be available are considered to be five to seven years in the future. Testing is not occurring, but the concepts are being acknowledged.

Companies that can be expected to drive the market for PHEVs and EVs are the current firms offering controlled charging capabilities, such as Coulomb Technologies and GridPoint. These companies can be expected to push these concepts in the market. These companies offer hardware along with software. New entrants, such as Google or Microsoft, will offer applications that may be the only necessary tools in the future.

Cities, such as San Francisco and Los Angeles, can be expected to be the testing areas for these applications. Hence, although the penetration rates of PHEVs may not make the applications a current possibility, California can expect to be one of the first states to have the aggregated load necessary for the concepts to be relevant.

CHAPTER 5:
Market Factors Impacting Market Adoption

5.1 Impact of the Economic Crisis

The economic crisis of 2008–2009 is affecting utility finances, energy consumption and prices, and, as a result, smart grid prospects. There are four prominent effects of the economic downturn:

- Reduced load growth and reduced utility revenues: While utility finances should be *made whole* via normal regulatory processes, they are frequently delayed. In the current environment, regulators are understandably reluctant to grant additional cost recovery or rate increases. The large AMI projects already approved for the three large California IOUs represent a large bet on smart grid by the California Public Utilities Commission, which will have to play out before additional large initiatives will be easily approved.
- Utility cost of capital and capital availability in general: While utilities are still a sector that can access financing, costs have increased, which is a natural negative for rate cost recovery. Even though the production tax credit for wind resources and the investment tax credits for solar projects were extended by Congress, the nature of the industry's financing has made new projects problematic. Wind developers generally do not have the profits to take advantage of the tax credit and have been in the habit of transferring those credits to the financial institutions that provide project financing. However, many of these institutions have experienced severe losses and cannot take advantage of the tax credits. Many developers complain of difficulties in obtaining project financing. Depressed energy prices (see below) only aggravate this situation.
- Reduced housing construction: The housing downturn is severe in California. New construction and new distribution feeder circuits usually offer an opportunity for utilities to take new technologies into commercial applications, and this avenue is cut off for now.
- Reduced oil prices: Oil (and natural gas) prices are depressed significantly from their peak a year and a half ago. As a result, electricity prices are also depressed, which reduced economic pressures for conservation.

Long-term housing should recover, and oil, gas, and energy prices will also recover. However, the cost of financing is not expected to improve, and inflationary pressures as well as eventual federal (and state) tax and budget realities may keep financing restricted and economic growth slow. This is one view, and a general economic forecast is far beyond the scope of this report.

More significantly, the financial situation would be expected to have a stymieing effect on corporate R&D and venture capital investments in new utility technologies, such as smart grid, were it not for the impact of the American Recovery and Reinvestment Act of 2009.

5.2 Impact of the Stimulus Legislation

The American Recovery and Reinvestment Act of 2009 (ARRA) and subsequent funding opportunities from the DOE and other federal agencies have been reported on extensively in many places, and it does not profit this report to repeat those analyses again. Also, as this report is being written, the DOE is processing comments to the largest Notice of Intent (NOI) and Funding Opportunity Announcement (FOA), which was to result in final FOA releases mid-June 2009 for smart grid demonstration and investment projects. Beyond these two major smart grid funding opportunities, there are several others which bear on the smart grid picture in California:

- The smart grid clearinghouse project was to be awarded in June 2009. This project will provide for a national database and repository for smart grid project and technology information. The intent is to collect information about what works and what does not to inform subsequent project and regulatory decisions. The Energy Commission and California, in general, should focus on taking advantage of this initiative.
- The smart grid standards effort is now a running project managed by NIST and contracted to EPRI. This is a fast-moving effort to identify, adopt, and develop as needed the standards for smart grid interoperability. As reported at the Energy Commission smart grid workshop in Sacramento on May 14, 2009 this effort does not conflict with any decisions in California so far. The state should follow this development closely. Achieving clarity in standards will be essential to facilitating technology developments by the growing community of smart grid suppliers as well as removing one element of uncertainty from utility and regulatory decision making.
- The DOE issued a FOA for ARPA-E—for *transformational R&D projects*—on May 12, 2009; submittals for this round closed June 2, 2009. It is not clear at this draft report's submittal whether there were any efforts in California to organize academic, supplier, and institutional submittals on a statewide basis or to attempt to coordinate with the state energy plan and smart grid vision. However, there will likely be subsequent rounds of this kind of abbreviated R&D solicitation and some state coordination may be desirable.
- Demonstration projects: The ARRA authorized and directed the U.S. DOE to pursue "regional Smart Grid demonstration projects." The DOE is diligently pursuing projects in three categories: synchrophasors and applications, storage, and smart grid. As the funding for these projects is on a matching-funds basis, the DOE will require state regulatory approval (where applicable) before funding demonstration projects. This indicates that the Energy Commission should coordinate and review activities with the CPUC in order to ensure that demonstration projects are in line with the state vision.
- Matching investment funds for smart grid technologies: ARRA also authorized considerable funding (estimated at $3 billion-plus depending upon final allocation of funds to demonstration and investment projects) for commercial smart grid technologies. As with the demonstration projects, the DOE will look for regulatory

approval as part of the submission process. While it is expected that many state investment applications will make use of already-approved AMI initiatives, the opportunity and need for a coordinated approach to the review and approval process are still valid.

Battery R&D and manufacturing: ARRA also provided substantial funding for advanced battery manufacturing investments. At the time of this report, the authors are aware of several battery manufacturers and start-ups, whose technologies and business models are focused on grid-connected storage as opposed to EV applications, which will be applying for funding. This supports the general conclusion that the performance and economics of electricity storage will continue to improve significantly as some of these technologies prove themselves.

CHAPTER 6:
Regulatory Factors

In this section, the authors identify and describe the various regulatory factors and issues that will or have the potential to affect smart grid deployment and penetration, as needed to support renewables penetration (Those issues, such as advanced asset management, that are not directly linked to renewables penetration are not addressed).

6.1 Cost Recovery Issue for Smart Grid

With any regulated utility investment decision, cost recovery is a critical factor in decision making. As noted earlier, the CPUC has already approved major AMI investments by the large California IOUs and an open question is how much additional appetite the state will have for major smart grid investment, given the condition of the economy. Also, how the utilization of ARRA funds may affect future decisions is unknown.

In general, significant penetration of smart grid technologies will require assurance of cost recovery. When these technologies are a substitute for more traditional investments (i.e., circuit capacity increases) or an adjunct to conservation and DR programs, cost justifications may pose new challenges. The smart grid field is too broad to allow a *one-size-fits-all* commentary.

It should be noted that the DOE NOI for both demonstration and investment projects included a mandatory calculation of the social and economic benefits of the project. The DOE referenced the metrics developed in a series of workshops by the Pacific Northwest National Laboratory (PNNL) as examples. The industry has concerns that the metrics could be used after the fact to alter cost recovery based on the relative success of the projects.

6.2 Performance-Based Rates and Reliability Targets and Penalties

One frequent driver for smart grid projects is improvements in SAIDI (System Annual Interruption Duration Index) and other similar metrics, though, one concern is that smart grid investment cost recovery could be *held hostage* to actual SAIDI improvement. As such, this is a disincentive to utility innovation in the goal of improved reliability. An example of this could be the use of community storage (as described elsewhere in this report) to dramatically enhance reliability. Both utilities and their regulators are accustomed to an environment where improvements are incremental (and usually small) and are based on proven technologies. Smart grid technologies, such as community storage, will require both parties to adapt to less-guaranteed investments with potentially larger payoffs. Demonstration projects will help reduce the magnitude of the overall risk, but this is clearly a time when innovation needs to be encouraged with regulatory tolerance for the inevitable discards.

6.3 Introduction of Standards for Smart Grid Systems

Regulatory issues typically focus on standards and creation of standards. In the case of smart grids, this is not an exception. There are specific areas of need in order for the smart grid to become accessible by all entities in California. However, there is an added difficulty in the case

of California, in that many smart grid efforts have been initiated or are beginning to enter implementation phases. There is a risk that standards can be created that may cause difficulties when trying to implement them over what may be termed as *legacy systems*.

For this reason, this section highlights standards that may be required for smart grids, but it is noted that any new standards should support existing standards efforts. Though California has the potential to be impacted by such issues, it is noted that even FERC notes that examples, such as IEC 61970, IEC 61968, and IEC 61850, have been developed in order to allow different systems to communicate with each other. In some cases, these standards are already in use.

It is acknowledged that as the smart grid may require additional standards in order to meet future needs, efforts and approaches should look to support existing standards or efforts.

6.3.1 Open Protocols and Standards

As noted above the NIST-EPRI effort on smart grid standards is already underway. This effort should reduce utilities' and investors' fear of a smart grid *betamax*. California should participate in this effort and endorse its outcomes fully.

6.3.2 Distribution Interconnection Standards

Interconnection standards will require revisions to adjust to the possibilities of reverse flows as well as local reliability measures, such as community storage blurred with *behind-the-meter* storage. Synthetic inertia and governor response may become a requirement or an optional service for distributed renewable generation.

6.3.3 Transmission Interconnection Standards

As noted, the authors believe that synthetic inertia and governor response will become a requirement or additional service for grid-connected renewable resources, provided either directly or via on-site storage. Additional requirements may evolve based on production forecasting and controllability.

6.3.4 Security Standards

As more and more stakeholders make the case for open, interoperable systems, the need for security standards gain increasing attention among regulatory agencies. Though it is expected that some level will be adopted, this can be problematic with California since a number of systems (AMI for example) are already moving forward in their implementation plans. Emphasis needs to be placed on ensuring that the security standards incorporated protect consumers, such as residential end-users and businesses. However, there is a potential inherent difficulty when standards are created after implementation and systems' rollouts. Each of the IOUs in California implementing AMI would have to roll out the proposed standards into systems that are already deployed. Efforts should focus on ensuring that future security standards are not set at a level that makes it difficult for current systems to adopt.

6.4 Third-Party Access to Meter Data and Consumer Data

The CPUC requested submittals on the subject of open standards for meter access. Google followed by filing a case for open access. Over a decade ago, California already established that

meter data belongs to the consumer, but the issues become ones of access, openness, cyber security, and privacy. Increasingly, it seems that consumers will have access to their energy usage in real time either directly from the meter or via a utility (or other service provider) website. This is a key step in facilitating consumer adoption of home automation, smart appliances, and distributed generation in order to reduce their own carbon footprint. Absent direct access, moderately expensive "work-arounds," such as stub meters or clamp-on meters, exist, but removing the need for consumers to deal with these issues would greatly facilitate matters.

6.5 Feed-In Tariffs, Two-Way Metering Tariffs

The authors have stated that full market and grid operations participation of distributed renewable resources are highly desirable, if not essential. This implies that two-way metering becomes the norm, and that a tariff basis for the delivery of energy at the distribution level (where in many cases is the most valuable) will be worked out—a feed-in tariff that reflects wholesale market prices, avoided uplifts, and reduced losses via delivery at the distribution level.

Note that such a flexible tariff may *cut both ways;* when the energy results in reverse flows and is utilized elsewhere in the system, it incurs high delivery costs as opposed to avoiding them. Dynamic feed-in tariffs will be a complex and contentious issue to resolve.

6.6 Depreciation Schedules and Early Replacement of Legacy Technologies (Stranded Asset)

California has already accepted that AMI initiatives imply replacement of older EM meters. Fully implementing the recommendations of this report will also require that older protection and SA equipment is replaced aggressively.

6.7 Regulatory Treatment of Electricity Storage

As discussed at length in the roadmap, storage is a new class of asset that often is not conveniently pigeonholed as "generation, transmission, distribution, and consumer." Storage is an energy time machine that takes energy produced in one time frame and delivers it in another. As such, someone *owns* the energy in storage, possibly the utility, even if the purpose is reliability, and possibly a transmission service. The regulatory paradigms for classification, cost recovery, and access to transmission storage need to be developed. The frameworks used for gas storage may be a starting point.

6.8 Market Integration of Consumer Real-Time Price Response

Achieving dynamic price response— the exposure of consumers to some form of time-variant pricing reflective of wholesale market prices and their attendant peak reduction and behavior adaptations— is a stated goal of both California and the federal government. Manufacturers are bringing *smart appliances* to market capable of reacting to real-time prices and reducing or deferring their consumption to reduce energy costs. Public policy issues aside, the integration of dynamic price response into today's wholesale day-ahead and spot market clearing paradigms

pose challenges to the ISO— What is the basis for forecasting the demand elasticity that it should use in clearing these markets? What implications does it have for real-time/balancing energy and exposure of wholesale participants?

A more critical public policy issue is that competitive retailers frequently find success by offering consumers (commercial) exposed to dynamic pricing a flat rate or other reduced exposure in return for a small premium. Were this to be the widespread market solution to dynamic pricing, the net result would be a small increase in average energy prices with little impact on peak reduction and demand response. In other words, it may be that a dynamic pricing regime applied to consumers is in conflict with competitive retail full-service offerings. The more dramatic the dynamic range of prices, the more attractive this option becomes for consumers. This aspect of dynamic pricing requires further analysis and understanding.

CHAPTER 7:
Project Outcomes – Smart Grid Roadmap

The research team utilized the following roadmap process:

- Identify current state of the grid in California.
- List the objectives that need to be met in order to facilitate renewable implementation.
- List the technologies that will be required to meet the objectives.
- Create a matrix that links the objectives and technologies that weights the necessary technologies.
- List the action items and recommended research efforts for the Energy Commission.

The smart grid vision is summarized below in figure 30.

Figure 30. Graphic of the smart grid roadmap

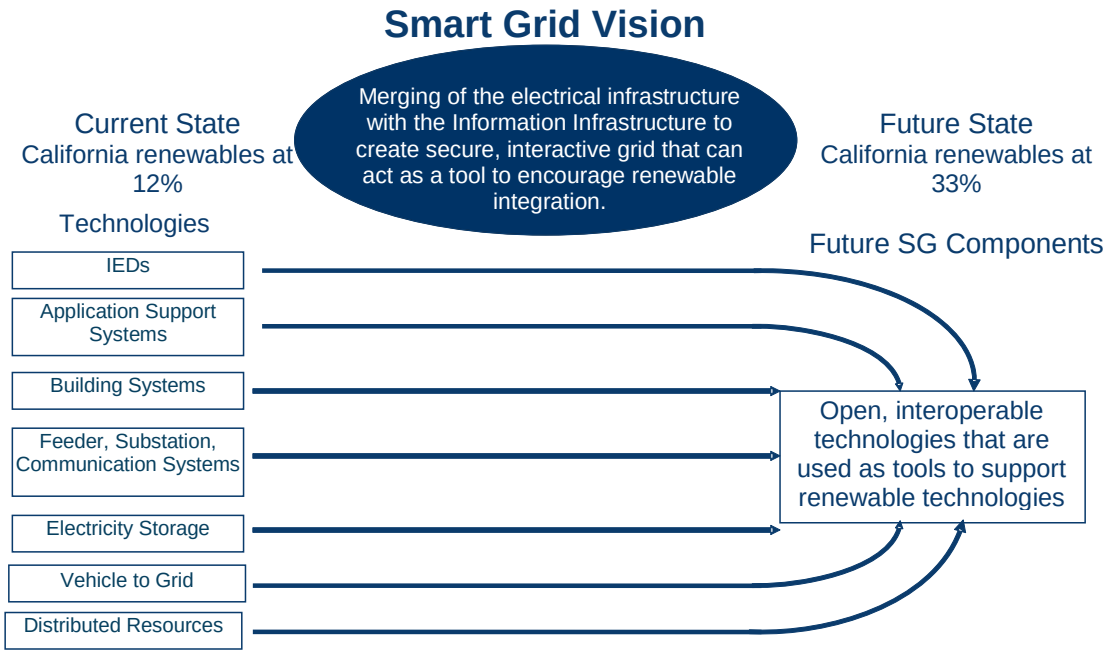

Source: KEMA

The sections in the roadmap first discuss the methodology, process for selecting technologies, and finally the actions that will be necessary to attain the objectives.

7.1 Description of Smart Grid Roadmap

The smart grid roadmap focuses on the main vision and technologies that will allow that vision to be realized. The driving components to the vision of California's future grid are provided in Figure 30. The main concept recognizes that technologies are allowing two infrastructures to be merged into one system that proactively utilizes its components rather than simply reacts. The proactive component, realized through the intelligent communications and integration added to the grid, paves the way for renewable or *variable* technologies to be added to the grid without disrupting the key attributes of California's electricity grid—reliability, security, and maintainability.

Though the primary focus of the vision for the future grid is to facilitate enhanced penetration of renewables for the roadmap itself, Figure 31 highlights some key conclusions regarding where focus needs to be concentrated. The electrical infrastructure is made up of specific technologies; and the *intelligence* infrastructure is made up of communications, intelligent devices, and IT applications.

Figure 31: Main components of California's smart grid

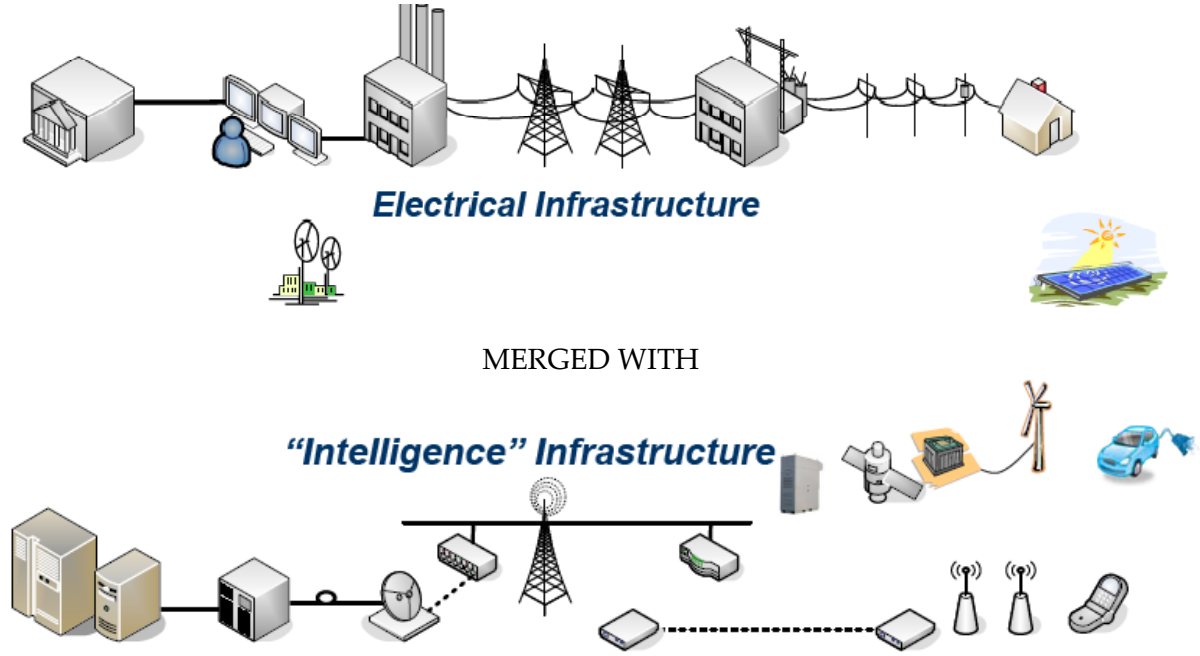

Source: KEMA

This roadmap examines the technologies, identifies how specific technologies can evolve to become key components to the future grid, and makes recommendations about what investments need to be made in order for these specific technologies to reach its desired state. As is noted in Figure 30, the specific technology areas include:

- Intelligent end devices, including synchrophasors.

- Application support systems.
- Building automation and building-to-grid technologies.
- Feeder, substation, and communication systems.
- Electricity storage.
- Vehicle-to-grid technologies (pluggable hybrid electric vehicles, electric vehicle integration).
- Distributed resources.

7.2 Vision for Direction of California Smart Grid

The Energy Commission has the goal of increasing renewables penetration in California to 33% by 2020. Specific components of a smart grid have the ability to help integrate renewable technologies into California's grid and, thus, help California attain its aggressive renewables penetration goal. However, because of the merging of the two large infrastructures, previous activity in California in advancing smart grid areas, and the potential technologies that are becoming available, it is apparent that an overall, state vision for the smart grid needs to be developed. In addition, as California presents some unique attributes in diversity of generation, size, and geography, the vision also needs to align with California goals rather than simply stating a national goal and vision.

Hence, for the roadmap, the vision for the direction of the California smart grid is stated as:

> Through research and development, encourage the product and technologies that create an enhanced electric transmission or distribution network that extensively utilizes sensors, controls, data communications and information technologies to improve reliability, economics and security of the power system, while accommodating and encouraging greater levels variable renewable technologies, storage resources, demand response, distributed generation and overall automation.

Alternative:

> Smart grid is the networked application of digital technology to the energy delivery and consumption segments of the utility industry. More specifically, it incorporates advanced applications and use of distributed energy resources, communications, information management, and automated control technologies to modernize, optimize, and transform electric power infrastructure.
>
> The smart grid vision seeks to bring together these technologies to make the grid self-healing, more reliable, safer, and more efficient, as well as empower customers to use electricity more efficiently.
>
> It also seeks to contribute to a sustainable future with improvements to national security, economic growth, and climate change.

7.3 Description of Smart Grid

A future smart grid has a number of areas from which benefits can be derived. Smart grid really provides information and the ability to proactively respond in order to improve service, reliability, and operations of the grid. For this case, the smart grid is focused on the objective of encouraging further development of renewable energy technologies in the State of California.

In order to describe how a *smart grid* can be used to help with renewable technologies, the authors have set up current state and future state diagrams in Figures 32, 33, and 34.

In Figure 32, the diagram shows the electricity grid that has the all the components of the grid, but the interaction is limited in each of the cases. For example, the radial flow arrows in Figure 32 show that communication and energy flow are essentially one-way. Hence, components like two-way communication with building systems are limited, and distributed generation is invisible to grid operators. Though substations have the capabilities to provide information, they do not have the capability of being adaptive and self-healing. The ramifications to the Energy Commission's goals are seen on the generation and commercial sides (far left and far right) of the diagram, where renewables are not dispatchable; there are stability issues, and behind-the-meter renewables are not noticed on the grid.

Figure 33 shows how the electricity grid is currently evolving in California. Implementation of AMI networks are providing two-way communications at the residential level, and introduction of new technologies, such as high phasors, fast-response storage, and adaptive protection, are enhancing the electricity grid, but there are still going to be additional issues, such as PHEVs and EVs being added to the grid across the state, including how these technologies can be integrated for larger purposes.

This diagram also shows the importance and necessity for a vision of the electricity grid. Currently, individual areas—Northern California, Southern California, and cities—are pursuing specific aspects of the grid but not in the context of vision of the California grid. Though current efforts may improve local operations, a state vision is most likely not being pursued.

Figure 34 shows the future state where all components are interacting, protection and monitoring is in place to ensure wind, storage, and electric vehicles are being seamlessly integrated into the reliable, secure grid network.

The roadmap provides an examination of the technologies that R&D should be focused on to help attain this future state of smart grid in California.

Figure 32. Diagram of the current State of California electricity grid

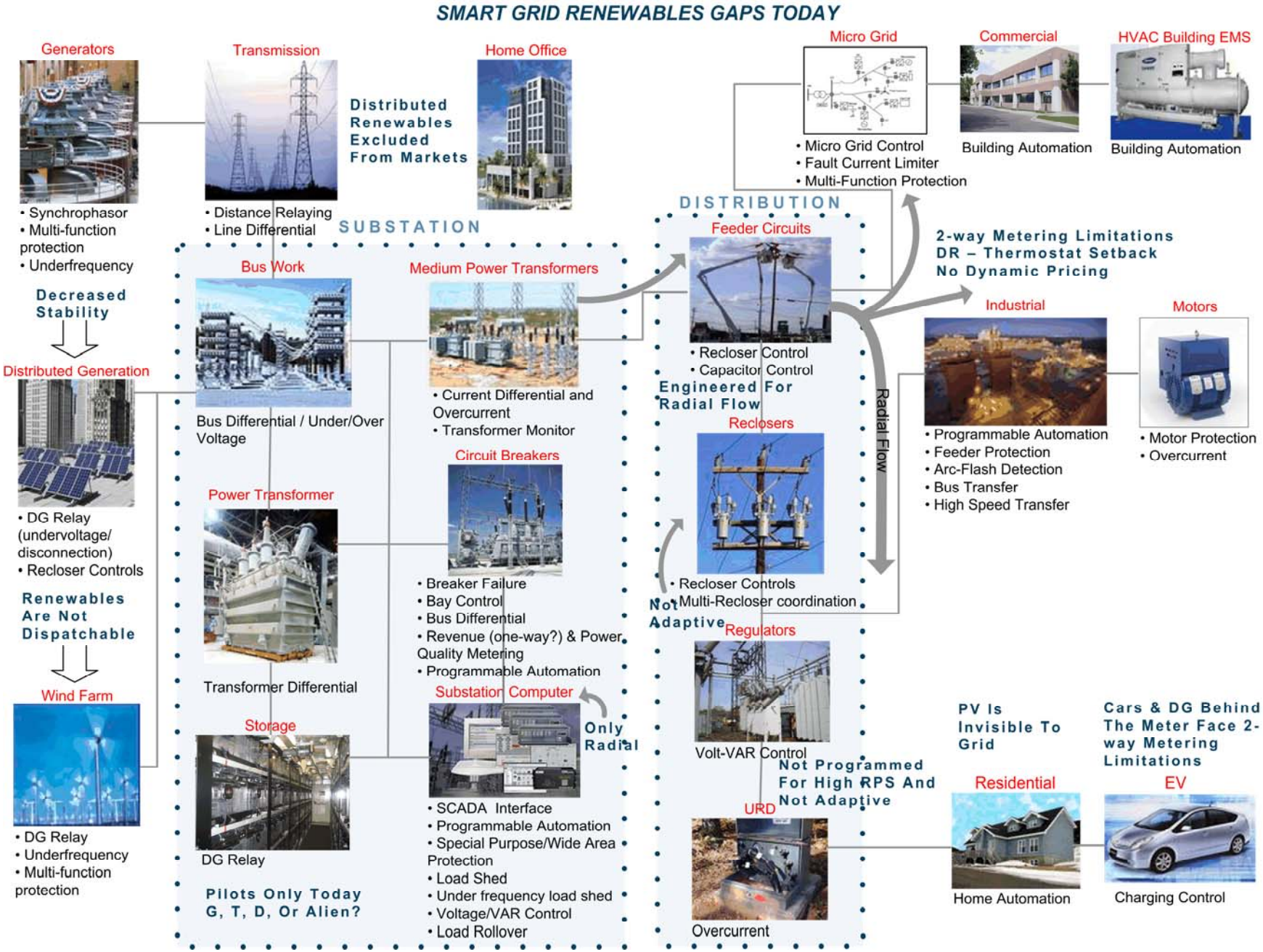

Source: KEM

Figure 33. Diagram of future State of the California electricity grid

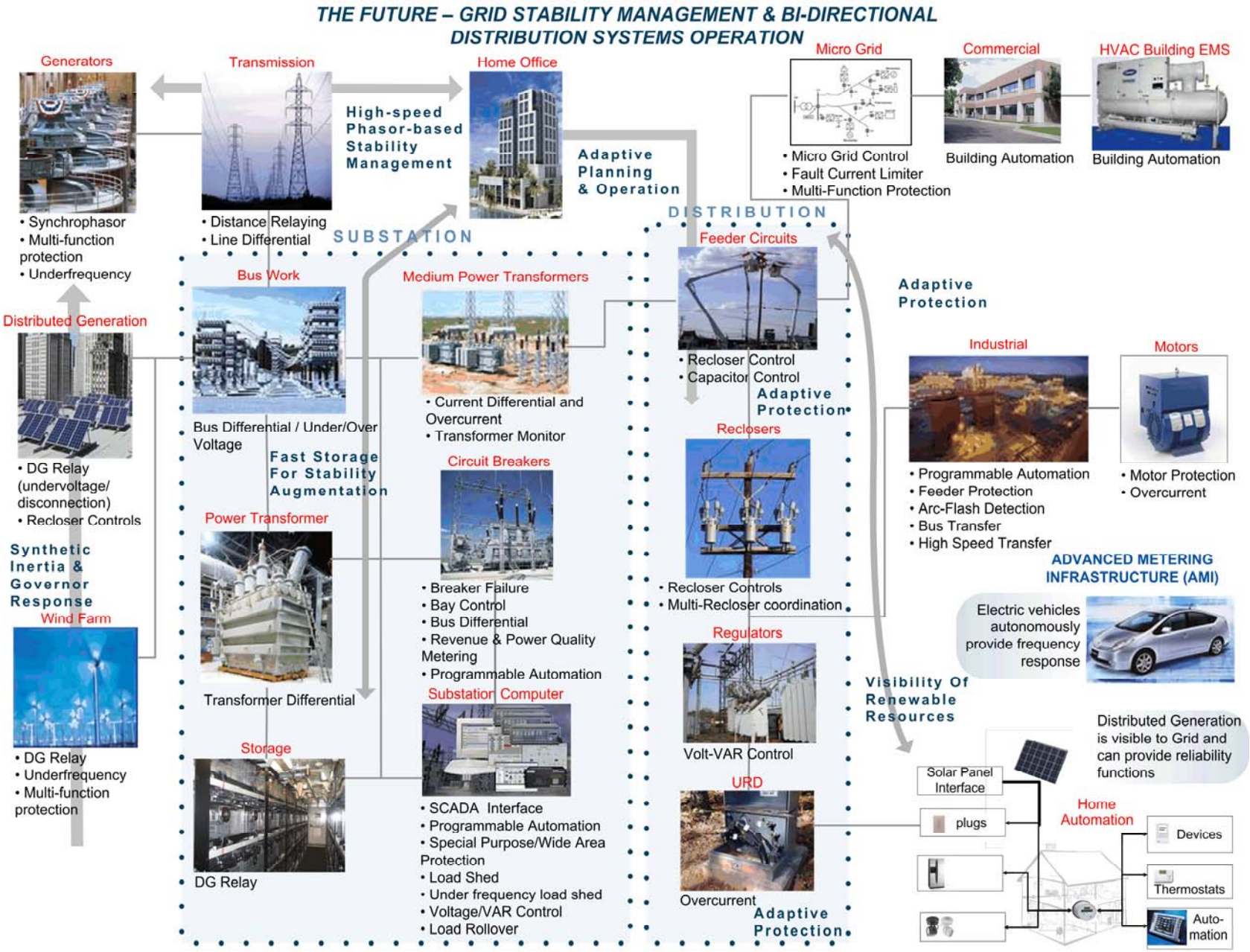

Source: KEMA

Figure 34. Diagram of future State of California electricity grid for renewable

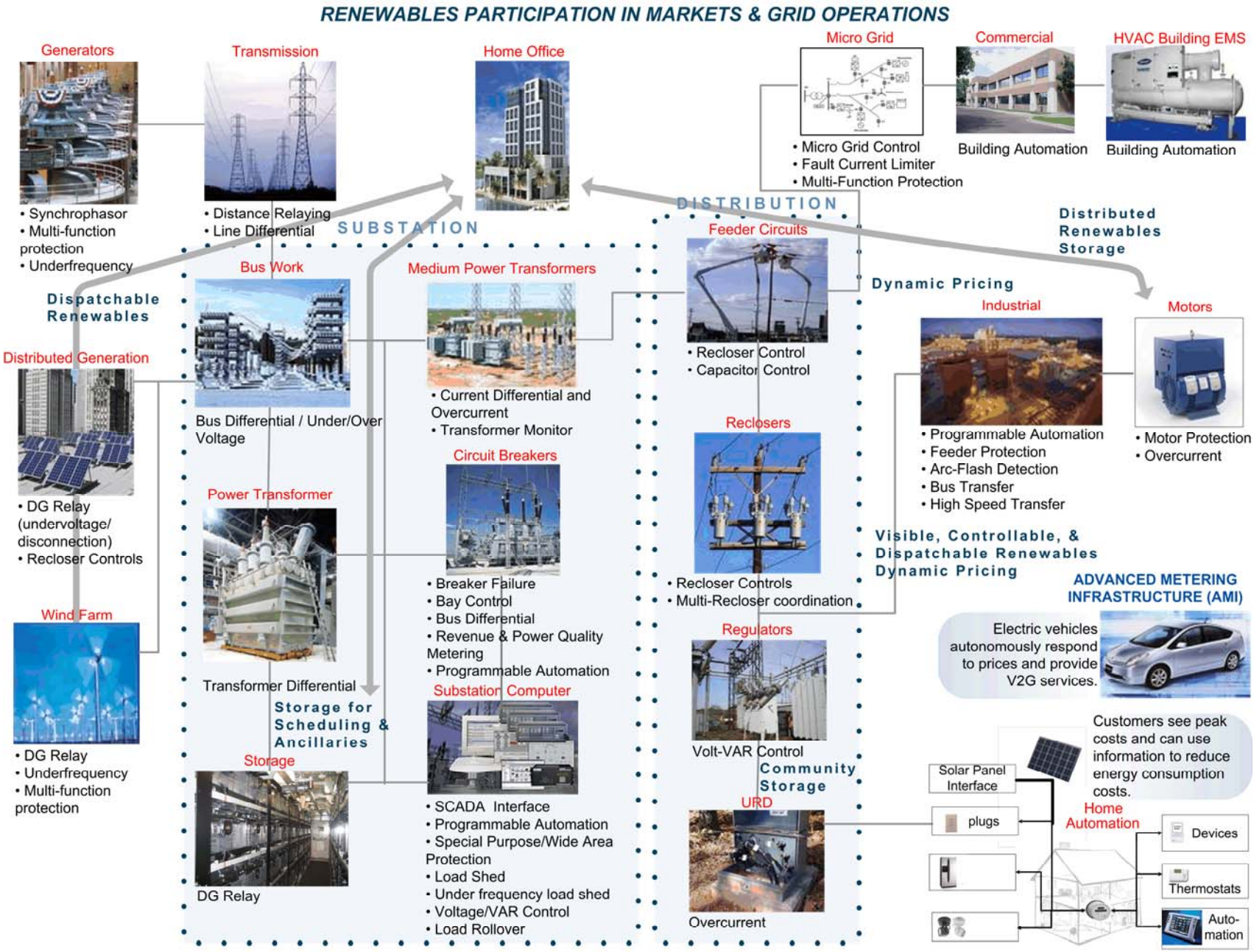

Source: KEMA

7.4 Roadmap Objectives and Technology Areas

The authors recognize that actions have already taken place to improve electricity-grid capabilities in California. Hence, the process for reaching the goal of utilizing smart grid evolution to encourage increased renewable implementation is focused on a top-down approach of identifying objectives and linking them to specific technologies that are expected to be part of the future smart grid. The approach occurs in three phases of:

1. Listing objectives that will facilitate increased renewable implementation.
2. Linking these to smart grid tactical objectives.
3. Linking the tactical objectives to actual smart grid technologies.

This process is an objective-based approach that specifies specific technologies that have the ability to help meet the objectives. With these technologies identified, a weighting system can be utilized that will allow the Energy Commission to direct R&D funds to improve and ensure continued evolution of the technologies.

7.4.1 Objectives That Will Facilitate Increased Renewable Implementation

In examining the areas that may have the greatest ability to increase renewable penetration, the authors have listed the following objective areas:

- Reducing renewable capital costs through:
  - Lowering interconnection costs
  - Improving capacity ratios
- Improving renewables operating economics:
  - By improved market participation
  - By reducing T&D losses
  - Through reduced limitation of renewable generation outputs
- Facilitating interconnection through:
  - Improving system reliability
  - Greater use of bidirectional flows
- Lowering system capital costs through:
  - Transmission expansion
  - Increasing distribution capacity
  - Better utilization of conventional generation
- Indirect wholesale power system economics:

    - Through reduction of congestion costs
    - By improving losses on the system
    - Reducing capacity payments
    - Encouraging use of better tariff rates
    - Decreasing energy prices
- Functional value to consumers
    - Reducing energy costs to consumers
    - Easing use of demand response
    - Improving reliability

7.4.2 Tactical Objectives That Will Facilitate Increased Renewable Implementation

The previous listed bullets are objectives that will help California facilitate increased renewable generation implementation. These objectives need to be translated into tactical objectives that can then be linked to actual technologies that should be encouraged through further R&D. The smart grid tactical objectives include:

- Providing visibility of renewable production
- Providing visibility of renewable capacity
- Creating dispatchable renewables
- Creating means of controlling of renewables production
- Balancing/leveling renewable production
- Green-charging PHEV integration
- Improving circuit ratings
- Improving Volt/VAR control
- Enabling hours pricing
- Creating behind-the-meter demand integration
- Creating behind-the-meter renewable integration
- Mechanisms for better T&D asset management
- Improving distribution reliability
- Improving transmission reliability

7.4.3 Technologies That Will Facilitate Increased Renewable Implementation

These tactical objectives can be met through the following technology areas. These areas are defined as the following:

- Intelligent End Devices (IEDs)
- Application support systems
- Building automation
- Home area networks
- Feeder & substation automation and communication systems
- Electricity storage
- Vehicle-to-Grid (V2G, V1G) management technologies
- Distributed resources

CHAPTER 8:
Method for Developing Smart Grid Roadmap

Each of the smart grid technologies examined has an attribute that may be missing, improving, or still in a state of industry debate as to whether the industry should continue down a specific path. It is also recognized that each of the attributes have different priorities in order to achieve the state objectives. Hence, the authors created a matrix tool that was used in creating the action items for the roadmap. Since the focus on the effort was on where to concentrate and focus R&D, timelines were not included in the evaluation, but rather the importance of each area that was analyzed in the study.

Two matrices are shown in Figures 35 and 36.

In Figure 35, the matrix shows a listing of the objectives that will facilitate increased renewable implementation horizontally across the top of the matrix. The actual objectives are listed in Appendix B, Section B.1 along with their subheadings. The smart grid tactical objectives are listed vertically in the far left of the matrix. These are described in Appendix B, Section B.2. How each of these tactical objectives map into the *facilitation objectives* is shown in the matrix. For each row of the tactical matrix, a ranking can be entered that weights the importance of that tactical objective as well as a reference in Appendix A that provides an explanation of the link and weighting. The weighting can be based on a simple, high, medium, and low importance scale factor.

In Figure 36, a similar matrix is shown but for the specific technologies. In this matrix, the top horizontal row shows current Energy Commission R&D areas and the description area that these technologies fit into with the Energy commission. The smart grid technologies are listed horizontally across the matrix in yellow. Subcategories of the technologies are listed horizontally below the first list of technologies.

Appendix A lists the scoring methodology in detail. Scoring can be accomplished by weighting the technology along the lines of their importance in attaining the smart grid tactical objectives. Each square in the matrix can show weighting based on a high, medium, or low importance as well as the reference in Appendix B where an explanation is provided. Appendix B also includes market and regulatory hurdles and needed R&D.

For each of the matrices, KEMA created in-depth explanations to the objectives/smart grid tactics as well as the technology assessments. Each of these sections is designed to explain the matrix scoring that KEMA used to weigh the technology actions. Appendix B, Sections B.1 and B.2 correspond to the matrix shown in Figure 35. Appendix B, Section B.3 corresponds to the matrix shown in Figure 36.

The final action items that are recommended are determined by the final scores obtained in the two matrices. The first matrix weights the importance of the smart grid tactical objectives; the second matrix weights the importance of each of the technologies in facilitating the tactical objectives.

Figure 35. Matrix weighting renewable facilitation and smart grid tactical objectives

Smart Grid Renewables Facilitation Matrix																																				
Renewables Facilitation Objectives >>>>>>	Reduce Renewables Capital Costs				Improve Renewables Operating Economics						Facilitate interconnection				System Capital Costs						Indirect Wholesale Power System Economics										Functional Value to Consumer					
Smart Grid Tactical Objectives ↓	Interconnection Costs		Capacity Ratios		Market Participation		Reduced T&D Losses		Reduce Limitations on Output		System Reliability		Bidirectional Flow		Transmission expansion		Distribution Capacity		Conventional Generation		Congestion costs		Losses		Capacity Payments		Generation Capacity		Energy Prices		Reduced Energy Costs		Less Inconvenient Demand Management		Improved Reliability	
	Ref	Rnk	Ref	Rnk	Ref	Rnk	Ref	Rnk	Ref	Rnk	Ref	Rnk	Ref	Rnk	Ref	Rnk	Ref	Rnk	Ref	Rnk	Ref	Rnk	Ref	Rnk	Ref	Rnk	Ref	Rnk	Ref	Rnk	Ref	Rnk	Ref	Rnk	Ref	Rnk
Visibility of Renewable Production			1		2		3				4		5		6		6																			
Visibility of Renewable Capacity			7								7				8		7										9									
Dispatchable Renewables					20		20		20				21		22				22		23				23				23							
Control of Renewable Production					10						11		12		13		13				14		14													
Balancing/Leveling Renewable Production			16						16						17						19															
Green-Charging PHEV Integration			24																										24		25		25			
Improved Circuit Ratings							18		18						18						18															
Improved Volt/ Var Control							19										19																			
Enable hourly pricing (AMI not a tactic, but tech)			20		21										22																23		24			
Behind-the-Meter Demand Integration					26																								26		26		26			
Behind-the-Meter Renewables Integration	27				27												27																27			
T&D Asset Management							28				28				28																					
Distribution Reliability																															29		29		29	
Transmission Reliability	32										30				30																					

Source: KEMA

Figure 36. Matrix weighting technologies for R&D investment

CEC Renewable Categories	Categorized as Integration				CEC Transmission & Distribution Category Area						Categorized as Integration						CEC Consumer Category Area								CEC Distribution Category Area								CEC Trasnmission & Distribution Category Area								CEC Consumer Category Area				Not Categorized by the CEC			
Smart Grid Technologies	IEDs				Application Support Systems						Building Automation						Home Area Networks								Feeder & Substation Automation and Communication Systems								Electricty Storage								Vehicle to Grid (V2G)				Distributed Resources			
Smart Grid Tactical Objectives ↓	Wide Area PMU	Enter Score Formula	BiDirectional Protection	Enter Score Formula	Distribution Planning	Enter Score Formula	Transmission Operations	Enter Score Formula	Distribution Operations	Enter Score Formula	Auto-DR	Enter Score Formula	Integrated Renewables Control	Enter Score Formula	Integrated Storage Control	Enter Score Formula	Behind-the-Meter Generation	Enter Score Formula	PHEV Charging Control	Enter Score Formula	Smart Appliances	Enter Score Formula	Low Voltage DC Wiring	Enter Score Formula	Incorporate Variability	Enter Score Formula	Substation Storage	Enter Score Formula	Incorporate BiDirection	Enter Score Formula	Advanced Asset Monitoring	Enter Score Formula	Behind the Meter Storage	Enter Score Formula	Community Distributed Storage	Enter Score Formula	Grid Connected Storage for Operations	Enter Score Formula	Storage at Large Scale Renewable Generation	Enter Score Formula	PHEV Green/Managed Charging	Enter Score Formula	Meter on the Vehicle	Enter Score Formula	Synthetic Inertia/ Governor Response	Enter Score Formula	BiDirectional Protection	Enter Score Formula
	Ref	Rnk	Ref	Rnk	Ref	Rnk	Ref	Rnk	Ref	Rnk	Ref	Rnk	Ref	Rnk	Ref	Rnk	Ref	Rnk	Ref	Rnk	Ref	Rnk	Ref	Rnk	Ref	Rnk	Ref	Rnk	Ref	Rnk	Ref	Rnk	Ref	Rnk	Ref	Rnk	Ref	Rnk	Ref	Rnk	Ref	Rnk	Ref	Rnk	Ref	Rnk	Ref	Rnk	Ref	Rnk
Visibility of Renewable Production					1		1		1				2				3								4				4																					
Visibility of Renewable Capacity					6		6		6				6				7								8				8																					
Dispatchable Renewables							9		9				9				10								11		11						12		12		12		12		13		13					
Control of Renewable Production							15		15				15				16								17																							
Balancing/Leveling Renewable Production							20		20				20		23		21				21				22		22						23		23		23		24		25		25					
Green-charging PHEV Integration															27				27								27						27								27		27					
Improved Circuit Ratings		30					31																														23								33			
Improved Volt/ Var Control							32		32																																				33			
Enable hourly pricing (AMI not a tactic, but tech)																			55		55																											
Behind-the-Meter Demand Integration											24		24				56		54		54																											
Behind-the-Meter Renewables Integration													38		38		39						60																									
Increased Demand and Distributed Renewables Participation on Markets and Operations							40				41		41		41		42		42		42												43		43						44		44					
T&D Asset Management																															46																	
Distribution Reliability				47	47				47																				47		48				49												50	
Transmission Reliability		51					51																				53				52						53								53			

Source: KEMA

CHAPTER 9: Recommendations

Our roadmap from Section 7 is listed below in figure 37. The diagram in the figure shows the technology categories that have been evaluated as part of the authors' process.

Figure 37. Smart grid vision and roadmap

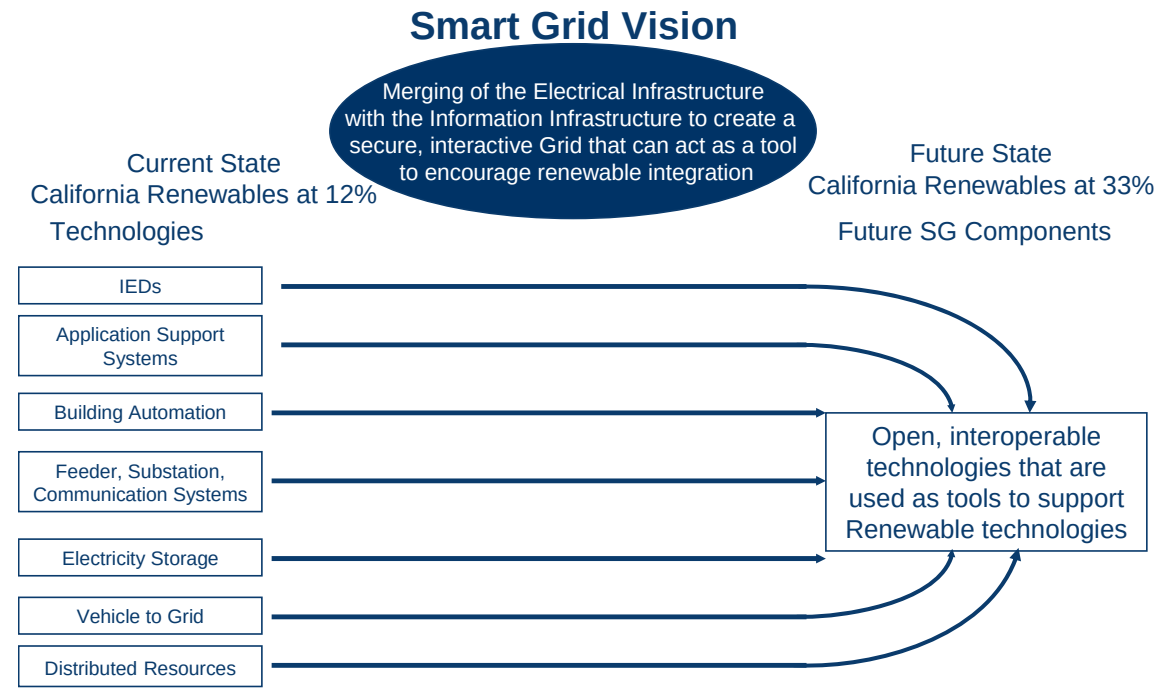

Source: KEMA

For each of the technology categories listed in the left hand side of figure 37, the authors have evaluated the potential of the technologies and specific focus areas of the technologies in the set of tables in this section. Each of the tables lists the technology category corresponding to the technology areas listed in the roadmap diagram, and then provides the specific focus area of the technology that is recommended for research as well as any policy actions that may be required in order to take advantage of the technology advancement that is being recommended. Explanations to the categorization are provided in Section 11 of the roadmap document.

9.1 High-Speed Monitoring and Control

The first R&D area is around the use of smart grid technologies to enhance the dynamic stability and performance of the grid under high RPS levels. High levels of inverter-based generation at off-peak hours will dramatically reduce system inertia and aggregate governor droop—this will potentially have adverse implications for system transient stability and dynamic stability in

response to events, such as generator outages or major transmission outages. As part of its planning for 2020 scenarios, the California ISO is examining these issues.

The synchrophasor systems that California and the WECC piloted offer the means to monitor system dynamics and provide the basis for systems' development to enhance it. The high-speed collection of phasor data will provide a real-time view of dynamic system performance, which can be used to monitor for degradation over time and calibrate the models and analyses used in system planning. Beyond that, the synchrophasor data can be used as inputs (as yet non-existent) to advanced control schemes, which could utilize fast-acting devices, such as FACTS, storage, or inverter-based resources, to enhance stability and react to disturbances.

This report recommends that the Energy Commission continue to work with PIER and supporting organizations on the next phases of synchrophasor demonstrations, and that the Energy Commission considers whether it can add support and emphasis to studies of system dynamics under high RPS levels. It will require significant time to develop the algorithms and tools to utilize fast resources for stability enhancement as well as time to validate the results of studies of future system behavior against synchrophasor observations.

This is an area where California, in particular, will experience stability issues associated with long transmission and inverter-based resources well before other regions, given the high RPS goals and the existence of stability issues in the West already. It is a logical area for California to focus resources on, as opposed to waiting on national or other regional results.

Table 17. High-speed monitoring and control smart grid vision

Vision	
High-speed monitoring and control of grid to enhance system stability and robustness	
Issue	**Research & development**
• High renewables portfolio standard alters system dynamics in a fundamental way, especially when fewer conventional generators are on line: – Lack of inertia and governor response, different excitation; different locations of renewables.	• Grid dynamics under high renewables portfolio standard : – Definitive studies on stability impacts of high renewables portfolio standard levels. – Control algorithms and technologies to utilize high speed resources for stabilization. – Analysis to determine where to deploy high speed resources. – Visualization concepts and technologies. – New algorithms for dynamic grid control and stabilization.
Technologies	
• Synchrophasors and high speed wide area networks. • Integrated control of high speed system resources (inverter based renewables and large scale fast grid connected storage).	

Source: KEMA

9.2 Renewables to Provide Dynamic Performance Support

The second and related area of R&D can be described as using the source of the problem to provide the solution. Renewable resources, which are inverter-based and lack inertia and governor response, are risks to system stability at high penetrations. However, the power electronics that are the core of the inverters could be modified to provide synthetic inertial response and governor response—that is, altering the transient power output in response to dynamic changes in system frequency. Inverter outputs might have to be augmented with local fast storage at modest levels in order to accomplish this. Whether the synthetic response should be purely localized in nature or coordinated with synchrophasor-driven system level controls is an open research topic. The authors recommend that the overall question of synthetic inertia and governor response is addressed in parallel with system studies of stability under high RPS and the development of synchrophasor-based control algorithms. The state may want to consider development of new interconnection standards that either require or incentivize the provision of synthetic dynamic response from inverter-based resources at some time in the medium-term future.

The two areas together—integration of synchrophasors into new high-speed monitoring and control schemes coupled with new standards for synthetic, dynamic response from inverter-based resources—constitute a vision for the future California grid where the current paradigms of system stability are transformed to a renewable- and smart grid-based paradigm exploiting new technologies. On the upside, the development of these methodologies and tools could conceivably result in increased transmission productivity by alleviating stability restrictions. On the downside, the failure to pursue these concepts could result in stability—imposed restrictions on renewable production, which would be contrary to the goals of achieving higher RPS penetrations.

Table 18. Renewables to provide dynamic performance support smart grid vision

Vision	
Renewables provide dynamic performance to assist in system stability and control	
Issue	**Research & development**
• Inverter electronics lack inertia, governor response, and excitation control for stability.	• Power electronics and control algorithms to achieve synthetic excitation stabilization, inertia, governor response. • System performance under high renewable portfolio standard – With and without dynamic performance – Integration with wide area phasor measurement unit-based stability augmentation.
Technologies	
• Power electronics and control algorithms – Synthetic voltage dynamics, governor response, inertia.	

Source: KEMA

9.3 Electricity Storage

A third smart grid development area revolves around the deployment and utilization of electricity storage. Many new storage technologies are being developed today, and the very large investments being made by the U.S. DOE under the ARRA, around battery development for EV and grid storage, will only bring more technologies into the market. The authors are not recommending that the Energy Commission invest in storage technology development itself—there are plenty of national and private initiatives underway, and there is no reason for California to add to the effort in terms of ensuring that appropriate storage technologies will be available to the state (incentivizing the development of a California-based storage industry is a different issue and properly one for consideration by those responsible for economic development). However, the state's leadership role in RPS and renewable integration make it logical for the Energy Commission to investigate and develop the deployment of storage appropriate to the state's electrical infrastructure. On the one hand, California will share the development of remote wind farms, connected by transmission of varying length and electrical characteristics, with several other regions. However, all regions have different patterns of wind production that will affect the appropriate deployment of storage for mitigating variability and diurnal effects. California may also experience development of PV solar and thermal solar, both in distributed and centralized forms, at higher rates than other states, so the use of storage in conjunction with solar resources, both centralized and distributed, may be a logical area for the state to provide leadership.

The authors recommend that the Energy Commission pursue analyses of how much storage with what characteristics is needed in order to support RPS levels, and how that storage is best integrated with the grid and operated. These analyses should, in time, become part of the regular planning process for the state infrastructure that encompasses generation and transmission.

Storage poses regulatory and interconnection issues at both the wholesale and distribution/retail level. At the wholesale level, the regulatory and interconnection standards issues revolve around having to classify storage as a generation or transmission resource. Already, the point has been made that the storage owner/operator is taking ownership of the electrical energy and is able to arbitrage its value over time—contradicting the regulated position of a transmission owner today. On the other hand, a wind developer is not able to access the federal production tax credit for storage investments today (this may change with legislation being developed in the U.S. Congress this spring that would create an investment tax credit for storage investments).

Similar questions exist around storage that is connected at the feeder/distribution-circuit level albeit with a different flavor. Storage at the distribution secondary level can be a tool in enhancing reliability, which begs the question of rate-base cost recovery as well as the possibility for a premium service level available to consumers at additional cost.

Establishing the regulatory rules for storage and how they can be used for multiple purposes in a single installation without creating regulatory treatment problems are a clear priority. FERC is

considering these questions as well, but the inherently local (as opposed to interstate) nature of the temporal movement of energy may make storage a primarily state issue. The regulatory questions around storage investment, cost recovery, and application need to be addressed or the advantages of grid connected storage will not be realized.

Finally the control algorithms that can be used to optimize storage usage at T&D levels require development. In purely merchant applications associated with time arbitrage of energy value, it is likely that the generation and merchant storage community will develop these tools. However, at the transmission level, and also for the development of new ancillary services associated with storage technologies, the unregulated for-profit community will not embark on the needed development and a role for the Energy Commission is logical. Energy Commission initiatives should be coordinated with ongoing national and other regional efforts to make the best use of resources; although as noted above, California may be a region where leadership is expected.

Table 19. Storage smart grid vision

Vision	
Storage is located throughout the electric infrastructure to support renewables penetration in terms of reliability, economics, operations, and deferred capital. Appropriate storage technologies are integrated in light of applications.	
Issue	**Research & development**
• Regulatory treatment of storage & asset classification. • Matching technologies to applications. • Deployment and control strategies linked to renewables.	• Modeling and analysis to determine how much storage is required/necessary to support California renewable goals. • What role will storage play in helping the state achieve zero net energy residential and commercial new construction goals? • What are appropriate regulatory, market, and incentive treatments to encourage storage in support of renewables? • Identifying the control technologies and algorithms necessary to ensure storage can seamlessly work with wind, grid requirements when integrating CA renewables to the electricity grid. • Continued investigation of emission benefits of storage technologies, that is commercial & industrial uses. • When storage is used in a multi-purpose application (as at a substation) how to allocate costs and benefits for cost recovery?
Technologies	
• Market and operations analysis and simulation. • Existing and developing storage technologies, capabilities, and economics.	

Source: KEMA

9.4 Distributed Resources

Much of the new renewable resources in California over the next decade will be distributed—installed on the distribution circuits, as with utility-owned rooftop PV, or behind the meter as with consumer-owned PV. Today, the production of those distributed resources is generally not monitored for system operations and market purposes and is invariably not controllable. Distributed renewables, in general, look like a peculiar type of non-conforming load to system and market operations and planning today. Feed-in tariffs are a topic of ongoing debate and regulatory development associated with distributed renewables behind the meter that may exceed peak or momentary load at the same location. Renewables owners rely on the investment tax credit and retail price level savings to justify DG economics.

Allowing renewable and DG access to wholesale markets on some basis may be an attractive way to increase market depth and liquidity as well as to incentivize renewable penetration, especially in light of AMI and potentially dynamic retail pricing. Achieving visibility and even control of distributed renewables are essential to that goal as well as of significant benefit to system operations at high penetration levels.

The next area of a new vision for the state grid is that distributed renewables are visible, controllable, and can be dispatched as part of system and market operations.

Lower cost communications and control require development to bring this vision about, including the possible integration of utility-system smart grid technologies with HAN and BAS, which might be the systems that are directly connected to the renewable resources. Market protocols' and system operations' standards and methodologies will require revisions to bring about this vision. The NIST smart grid architecture and standards development effort will address behind-the-meter renewable resources in particular at least in terms of communications and data models; but the tariff and market protocols are California state issues to be resolved.

Other possibilities to achieve visibility, if not control, exist—for instance, coupling some direct monitoring of renewable production with statistical analysis of feeder-level data. The direct monitoring can be used in a sample sense to calibrate the use of feeder data to estimate total renewable production. This could be a useful interim approach until more widespread communications and controls can be developed and deployed.

Integration of distributed renewables in the markets goes hand-in-hand with the integration of price-responsive load in markets as well—whether via simple dynamic pricing or more elaborate market integration. Accomplishing this (and associated increased levels of demand response and behind-the-meter storage) all require a better understanding of end-usage price elasticity and how to incorporate estimated price elasticity into wholesale demand forecasting and market operations.

Table 20. Distributed renewables smart grid vision

Vision	
Distributed renewables are dispatchable to provide system operations flexibility and are capable of participating in energy markets; allocation of costs and benefits (especially capital deferral) reflects the full value of renewable resources to the grid.	
Issue	**Research & development**
• Requirement needs for dispatchable distributed generation. • Communications • Controls • Tariff structures • Metering • Integrating advanced inverters	• Renewable controllability/renewables and storage. • Demonstrating residential solar-storage applications and testing of dispatchable, guaranteed responses. • Low cost communications and control. • Market protocols for forecasting, scheduling, integration and capacity, metering standards. • Metering strategies and tariff structures that will facilitate increased penetration of renewables, enhanced distributed generation capability, and improved ability to achieve statewide zero net energy goals. • Demand forecasting and elasticity research and development.
Technologies	
• Storage – distributed generation configurations. • Utilizing internet-Wi-Fi for transferring energy information and energy management. • Intelligent electronic devices. • Next generation inverters. • Home area networks and building automation systems with integrated demand response.	

Source: KEMA

9.5 Electric Vehicles

BEV and PHEV adoption is forecast to increase greatly in the next decade; in fact, this is now a national goal. A larger than average share of these vehicles will appear in California. Other efforts are underway surrounding the integration of BEV and PHEV with the grid. The EPRI infrastructure working group, of automotive, building, and electrical industry players, is working on the standards for charging infrastructure and information exchange. Additionally, the ISO RTO Council project is anticipating the impacts of BEV/PHEV on grid and market operations and market adaptations to better integrate and exploit BEV/PHEV characteristics. Out of these efforts, some early thinking is already becoming clear—as soon as technology and costs allow, automakers will want to develop and sell cars with larger battery capacity and faster charging capacity than are currently being announced. *Level 1* charging (110 volts 15 amps) provides neither very much flexibility nor much of a loading problem. By the time BEV are widely sold in large numbers, *Level 3* charging (220 V 60+ amps) could become the norm; this will provide both challenges and opportunities. An early conclusion is that some form of *managed charging*, where the vehicle charging is controllable/deferrable as part of system operations and markets, will be highly desirable if not mandatory.

Another early observation is that many manufacturers are planning on substantial computational and communications capabilities embedded in the vehicles—an "iPhone on wheels" as one expressed it. This leads to possibilities around V2G integration that rely on the vehicle (as opposed to the AMI infrastructure or the charging infrastructure) to provide dynamic price response and managed charging. An interesting possibility is vehicle metrology—to put the actual revenue meter on the vehicle, which could greatly simplify the IT and communications requirements for charging infrastructure and utility operations as well as provide pricing flexibility tailored to vehicle load.

A final early thought is that BEV buyers are likely to be highly *green* in their personal motivations. Such consumers may be interested by *green-charging* schemes that directly link BEV charging to renewable energy production and delivery.

It behooves the Energy Commission to both follow the existing and nascent national studies and initiatives closely as well as to work closely with the state Department of Transportation and CPUC on concepts such as vehicle metrology, given that California is historically a leader in transportation emissions reductions and also a targeted early market for the EV sector. An overall cost-benefit analysis of different modes of V2G integration around these concepts would be a good place to start.

Table 21. Electric vehicle and plug-in hybrid electric vehicle smart grid vision

Vision	
Pluggable hybrid electric vehicle and electric vehicle owners can enroll in green charging that matches vehicle charging to specific renewable power production and obtain incentives, renewable energy credits, and tariffs that facilitate enhanced renewable penetration.	
Issue	**Research & development**
• Pluggable hybrid electric vehicle and electric vehicle load is *behind the meter*. • No current separate measurement and control. • Pluggable hybrid electric vehicle and electric vehicle mobility. • Back-office billing and settlement.	• Vehicle metrology and applications. • Market/rate structures. • Separate settlements process.
Technologies	
• Wireless internet and global positioning systems. • Metering on vehicles. • Cloud computing. • Home area network with integrated demand response.	

Source: KEMA

9.6 Bidirectional Flows

Some utilities in California are beginning to think about the potential for bidirectional flows along part or all distribution-feeder circuits, due to high local renewable penetration; others believe that this is a non-problem, which occurs only rarely. The authors believe that the possibility exists. For instance, a feeder serving a commercial office park that has a great deal of rooftop PV could see a reverse flow on a cool, sunny weekend when building HVAC load is low and PV production high. One possibility for handling this potential scenario is to transition all such feeder situations to microgrids with appropriate new protection and controls. Another is to examine the technological and operational issues around transitioning radial feeder circuits to allow for bidirectional flows. Either way, all the utilities agree that protection devices, planning tools, and operating principles for bidirectional flow on current radial circuits do not exist.

Logical steps for the Energy Commission to consider include a high-level analysis of the likelihood and penetration of bidirectional flow potential, followed by a high-level cost-benefit analysis of whether to pursue bidirectional flows on radial circuits, transitions to microgrids, or restrictions on renewable penetration in some feeder instances. The authors suspect that such an analysis would conclude that all are possible and that feeders would logically progress from restricted penetration to bidirectional flow to microgrid conversion as a result of some new utility planning process. The planning tools for understanding this require development, and the production devices require development. The authors believe it is possible that many microprocessor-based feeder protection devices already in place in California are potentially upgradeable to new bidirectional capabilities via software or possibly chip upgrades, provided the manufacturers develop such capabilities. As the manufacturers are unlikely to develop these capabilities absent a market, it may be desirable for the Energy Commission to pursue some development and demonstration initiatives.

Table 22. Bidirectional flow smart grid vision

Vision	
Distribution circuits capable of supporting high renewable portfolio standards will require adaptive protection, automation—and the possibility for bidirectional flows— and ability to adapt to high variability.	
Issue	**Research & development**
• Current engineering, protection, and operations are non-adaptive and provide for radial flows only.	• Cost-benefit analysis of bidirectional flow. • Analytics for planning and operations. • Software upgrades to field devices (intelligent electronic devices). • Communications.
Technologies	
• Distribution automation. • Intelligent electronic devices. • Substation automation. • Stochastic circuit analysis for planning and operation.	

Source: KEMA

9.7 Dynamic Pricing

One of the stated objectives of the ARRA smart grid provisions, and a focus of the DOE-planned smart grid demonstrations, is the integration of retail consumers into energy markets via some form of dynamic pricing. Indeed, this is the ultimate driver for AMI. In order for customers to respond to dynamic pricing, they will look more and more to smart systems and appliances in their homes and offices to automatically respond. Much of the current discussion around this topic envisions the smart meter as a gateway to smart appliances, air conditioner, and the like. However, another altogether different alternative exists in the possibility for HANs and BASs to be the systems that monitor prices, react to prices, and decide what usage to curtail. Such systems offer additional capabilities in terms of communicating back to utility and market systems about how much demand response is available, what elasticity exists, and how much load deferral to later periods is possible. The use of existing BAS intelligence, data gathering, and computational capabilities offers *low-hanging fruit* that could result in earlier adoption and benefits of dynamic pricing, in the case of commercial buildings especially. B2G has not received the same level of attention and focus as residential AMI for a variety of market reasons, including the structure of the commercial real estate industry.

The potential for a variety of R&D efforts, ranging from increased interoperability and standards at the consumer device/appliance level to B2G concepts, is substantial. There are also real needs for incentives for commercial real estate operators, tenants, and owners to invest in B2G as part of state incentivized energy-efficiency efforts.

Table 23. Dynamic pricing smart grid vision

Vision	
Building automation systems in commercial buildings and residential home area network systems can interact with hourly prices to create demand price elasticity in the markets.	
Issue	**Research & development**
• Lack of market protocols. • Difficulties in forecasting. • Lack of building area system/home area network applications support. • Communications and settlements. • Rate structures. • Device compatibility and interoperability.	• Econometrics and forecasting. • Market structures and mechanisms. • Elasticity metrics. • Optimization strategies. • Time variant pricing strategies to harness power of distributed generation resources. • Uniform definitions of device object and attributes and binding rules.
Technologies	
• Internet • Device networking • Local optimization devices	

Source: KEMA

9.8 Low-Voltage Direct Current Applications

A final set of recommendations is perhaps farther out in time and may include impacts other than the topics described above. An interesting concept is that new or retrofitted commercial office buildings could be directly wired for low-voltage DC both to support LED lighting as well as digital office equipment (computers, printers, routers, displays, and so forth). Only HVAC systems and centralized services, such as copying, need be powered by conventional 110V 60Hz power. In order for this development to occur, office equipment and related industries would have to standardize DC voltage levels, and a new set of building electrical code standards would have to be developed. Whether this concept is sensible is unclear today. The U.S. Senate was interested in this possibility and may ask the DOE to conduct some preliminary investigations. It is likely that only a customer the size of the U.S Government, as part of energy efficiency retrofitting federal facilities, could bring this about.

At this time, as interesting as the concept is, the authors recommend that the Energy Commission take a *wait and watch* posture to see what actions, if any, the U.S. DOE takes on this front.

Table 24. Low-voltage direct current wiring smart grid vision

Vision	
Future zero net energy buildings will have low voltage direct current wiring linked to distributed renewable generation and storage—role of 120/240 volts alternating current is limited to grid interconnection.	
Issue	**Research & development**
• Eliminate conversion losses and stand-by demand. • More *natural* for distributed renewables. • Lack of standards for current commercial lighting/electronics	• Standards (Underwriters Laboratory, building code, electronics industry). • Cost benefit analysis considering future electronics products, pricing, and any new/existing construction costs • DC motor and drives in larger appliances. • Transition of home area network communications to direct current wiring base, low voltage direct current power line carrier • Embedded revenue-grade metering and home area network connectivity in large appliances • Software-defined radios and agile frequency transceivers for home area network gateways
Technologies	
• Light emitting diode lighting. • Solid state low voltage protection / controls • Electronics with standard DC supplies	

Source: KEMA

GLOSSARY

AC	alternating current
ADR	auto demand response
AGC	automatic generation control
AHP	analytical hierarchical process
AMI	advanced metering infrastructure
Amp	ampere
AMR	automatic meter reading
ANSI	American National Standards Institute
API	application programming interface
ARB	Air Resources Board
ARRA	American Recovery and Reinvestment Act
ASHRAE	American Association Of Heating, Refrigeration, and Air Conditioning Engineers
B2G	building to grid
BAC	building automation control
BACnet	building automation control network
BAS	building automation system
BCA	benefit-cost analysis
BESS	battery energy storage system
BPL	broadband over power line
C&C	command and control
C&I	commercial & industrial
CAES	compressed air energy storage
CEC	California Energy Commission
CIM	common information models
CIP	critical infrastructure standard
CPUC	California Public Utilities Commission

CSI	California Solar Initiative
CTP	Clean Transportation Program
CVR	conservation voltage reduction
DA	distribution automation
DC	direct current
DFR	digital fault recorder
DG	distributed generation
DMS	distribution management system
DOE	department of energy
DR	demand response
DRRC	Demand Response Research Center
DSM	demand-side management
DSP	digital signal processing
ECAR	East Central Area Reliability
ECM	equipment condition monitoring
EM	electromechanical
EM	energy management
EMS	energy management system
EPRI	Electric Power Research Institute
EV	electric vehicle
FA	feeder automation
FCI	fault current indicators
FCL	fault current limiter
FDIR	fault detection, isolation, and recovery
FERC	Federal Energy Regulatory Commission
FLISR	fault location, isolation, and restoration
FOA	funding opportunity announcement
G2B	grid to building

GE	general electric
GIS	geographic information system
GPS	global positioning system
GW	gigawatts
HAN	home area network
HAS	home automation system
HEMS	home energy management system
HEV	hybrid electric vehicle
HMI	human machine interface
HVAC	heating, ventilation, and air conditioning
HW	hardware
Hz	hertz
IBC	intelligent building control
IEC	International Electrotechnical Commission
IED	intelligent electronic device
IEEE	Institute of Electrical and Electronic Engineers, Inc.
IHD	in-home display
IOU	investor-owned utility
IP	internet protocol
IRC	ISO RTO Council
ISO	independent system operator
IT	information technology
IVVC	integrated volt/var control
Kbps	kilobytes per second
kV	kilovolt
kW	kilowatt
kWh	kilowatt hour
LADWP	Los Angeles Department Of Water And Power

LAN	local area network
LED	*light emitting diode*
LEED	Leadership In Energy And Environmental Design
LMP	localized marginal pricing
LTC	load tap changing
LV	low voltage (e.g. 220 or 120 volts AC)
M2M	machine to machine
MAC	Media access control
MAN	metro area network
MHz	megahertz
MIU	meter interface unit
Mpg	miles per gallon
MV	megavolt
MW	megawatt
NASPI	North American Synchrophasor Initiative
NCU	network control unit
NERC	North American Electric Reliability Corporation
NIST	National Institute Of Standards And Technology
NOI	notice of inquiry
O&M	operation and maintenance
OSI	Open Systems International
P2P	point to point
PBM	performance-based maintenance
PCT	programmable communicating thermostat
PD	partial discharge
PDOL	partial discharge detection online with localization
PG&E	Pacific Gas and Electric
PHEV	pluggable hybrid electric vehicle

PIER	Public Interest Energy Research
PLC	power line carrier
PLC	programmable logic controller
PMU	phasor measurement unit
PNNL	Pacific Northwest National Laboratory
PPA	power purchase agreement
PV	photovoltaic
R&D	research and development
REC	renewable energy credit
RETI	Renewable Energy Transmission Initiative
RF	radio frequency
RFP	request for proposal
RIG	remote intelligent gateway
RMR	reliability must run
ROW	right of way
RPS	renewables portfolio standard
RTO	*regional transmission organization*
RTU	remote terminal unit
SA	substation automation
SAIDI	system annual interruption duration index
SCADA	supervisory control and data acquisition
SCAQMD	South Coast Air Quality Management District
SCE	Southern California Edison
SDG&E	San Diego Gas & Electric
SDR	software-defined radio
SEGIS	Solar Energy Grid Integration System
SEL	Schweitzer Engineering Laboratory
SG	smart grid

SMUD	Sacramento Municipal Utility District
SOE	sequence of events
SW	software
T&D	transmission and distribution
TCP	transmission control protocol
TLM	transformer load management
UC	University Of California
UPS	uninterruptible power supply
V	volt
V2G	vehicle to grid
VAR	volt-ampere-reactive
WAMS	wide area monitoring system
WAN	wide area network
WECC	Western Electricity Coordinating Council
ZEV	zero emission vehicle

REFERENCES

Begovic, M., D. Novosel, and B. Branislav. "Issues Related to the Implementation of Synchrophasor Measurements." Hawaii International Conference on System Sciences, Proceedings of the 41st Annual, Waikoloa, HI, Jan. 7-10, 2008.

CNN Money. January 27, 2009. http://money.cnn.com/news/newsfeeds/gigaom/green/2009_01_26_faq_smart_grid.html

Department of Water and Power, City of Los Angeles. "Advanced Metering Infrastructure / Smart Grid Project". Presented at the California Energy Commission Advanced Metering Infrastructure workshop, May 27, 2008.

Goetzberger, A. and V. Hoffmann. *Photovoltaic Solar Energy Generation*. Springer-Verlag, 2005.

Gunther, Erich. "Itron's OpenWay®: Utilities can Benefit from its Standards-Based Approach". *Smart Grid News,* April 9, 2008.

Johnson, Gary. *Wind Energy Systems*. Electronic Edition, 2001.

KEMA. *Phasor Measurement Application Study*. CEC, 2007

Knazkins, V. *Stability of Power Systems with Large Amounts of Distributed Generation*. PhD Thesis, Royal Institute of Technology (KTH). Sweden, 2004.

Newton Evans. *2008 Siemens PTD Market Sizing Study,* December 2007.

North American Substation Integration and Automation Systems Market.pdf. Page 73, originally published by Frost & Sullivan, 2005.

Piette, M.A. *Development and Evaluation of Fully Automated Demand Response in Large Facilities*. PIER Project Report. CEC-500-2005-013.

Relay 2004 Vol 1. North American Report. Page 49

Wall Street Journal, February 14, 2009. http://online.wsj.com/article/SB123458384689487271.html

URLs Cited:

http://et.epri.com/InfrastructureWorkingCouncil.html

2006 UTC SUBSTATION.PDF

PIER Demand Response Research Center. (http://drrc.lbl.gov/)