Edmund G. Brown Jr.
Governor

HIGH EFFICIENCY GAS-FIRED DRUM DRYER FOR FOOD PROCESSION APPLICATIONS

PIER FINAL PROJECT REPORT

Prepared For:
California Energy Commission
Public Interest Energy Research Program

Prepared By:
Gas Technology Institute

April 2011
CEC-500-2010-043

Prepared By:
Yaroslav Chudnovsky, Pd.D.

Gas Technology Institute
End-Use Solutions
1700 South Mount Prospect Road
Des Plaines, Illinois 60018

Commission Contract No. 500-05-019

Prepared For:
Public Interest Energy Research (PIER) Program
California Energy Commission

Michael Lozano, P.E.
Contract Manager

Virginia Lew
Office Manager

Laurie ten Hope
Deputy Director
ENERGY RESEARCH & DEVELOPMENT DIVISION

Melissa Jones
Executive Director

DISCLAIMER

This report was prepared as the result of work sponsored by the California Energy Commission. It does not necessarily represent the views of the Energy Commission, its employees or the State of California. The Energy Commission, the State of California, its employees, contractors and subcontractors make no warrant, express or implied, and assume no legal liability for the information in this report; nor does any party represent that the uses of this information will not infringe upon privately owned rights. This report has not been approved or disapproved by the California Energy Commission nor has the California Energy Commission passed upon the accuracy or adequacy of the information in this report.

Acknowledgements

The project team is grateful to the California Energy Commission's Public Interest Energy Research (PIER) Program for its financial support and strong encouragement in this challenging effort. We are also grateful to the project's industrial partners, Groupe Laperrier & Verreault USA Inc. and Flynn Burner Corporation, for their significant technical contributions to development and enhancement of the gas-fired drum dryer system. This project would not have come to pass without the committed efforts of the participating plant personnel. Their support and contributions to this project are deeply appreciated by the entire project team.

Please cite this report as follows:

Chudnovsky, Yaroslav. 2011. *High Efficiency Gas-Fired Drum Dryer for Food Processing Applications.* California Energy Commission, PIER Industrial/Agricultural/Water End-Use Energy Efficiency Program. CEC-500-2010-043.

Preface

The California Energy Commission's Public Interest Energy Research (PIER) Program supports public interest energy research and development that will help improve the quality of life in California by bringing environmentally safe, affordable, and reliable energy services and products to the marketplace.

The PIER Program conducts public interest research, development, and demonstration (RD&D) projects to benefit California. The PIER Program strives to conduct the most promising public interest energy research by partnering with RD&D entities, including individuals, businesses, utilities, and public or private research institutions.

PIER funding efforts are focused on the following RD&D program areas:

- Buildings End-Use Energy Efficiency
- Energy Innovations Small Grants
- Energy-Related Environmental Research
- Energy Systems Integration
- Environmentally Preferred Advanced Generation
- Industrial/Agricultural/Water End-Use Energy Efficiency
- Renewable Energy Technologies
- Transportation

High Efficiency Gas-Fired Drum Dryer for Food Processing Applications is the final report for the project (contract number 500-06-018) conducted by Gas Technology Institute. The information from this project contributes to PIER's Industrial/Agricultural/Water End-Use Energy Efficiency Program.

For more information about the PIER Program, please visit the Energy Commission's website at www.energy.ca.gov/research/.

Table of Contents

Acknowledgements……i
Preface……..iii
Abstract……ix
Executive Summary……1
1.0 Introduction and Purpose 5
1.1. Background: Food Processing in California 5
1.2. Drum Drying..... 5
1.3. Energy Efficiency..... 8
2.0 Project Overview and Approach 9
2.1. GFDD Technology: Description and Design 10
2.2. Laboratory Thermal Processing 15
2.3. Full-Scale System: Field Engineering and Installation..... 18
2.4. Combustion Controls and Main Control Panels..... 22
3.0 Project Results: GFDD Performance Evaluation 25
4.0 Conclusions and Recommendations..... 31
4.1. Commercialization Potential 31
4.2. Recommendations..... 31
4.3. Benefits to California..... 31
5.0 References 33
6.0 Glossary of Terms..... 35
Appendix A. Computational Fluid Dynamics Modeling Results…….39
Appendix B. Design Drawings, Sketches, Piping and Instrumentation Diagrams……51
Appendix C. Powder Scan Results……61
Appendix D. Operating Manual (Groupe Laperrier & Verreault USA Inc.)……...67
Appendix E. Combustion Controls Manual (Flynn Burner Corporation)……...107
Appendix F. System Characterization Procedure……...149
Appendix G. Bedrosian & Associates (DVBE) Report on Gas-Fired Drum Dryer Marketing Calls……...151

List of Figures

Figure 1. Gas-Fired Drum Dryer concept (U.S.Patent 6,877,979) 2

Figure 2. Pilot-scale Gas-Fired Drum Dryer unit Photo Credit: Gas Technology Institute 2

Figure 3. Full-scale Gas-Fired Drum Dryer system 3

Figure 4. Generic Drying System 6

Figure 5. Typical feed systems for drum drying 7

Figure 6. Single drum drying system Buflovak ASDD with multiple "satellite" application rolls Source: www.buflovak.com 7

Figure 7. Static temperature field at different lengths of the combustion product deflector: a – short; b - long 11

Figure 8. GFDD bearing (a) and bearing housing (b) employed for the full-scale unit 12

Figure 9. Introduction of the air/gas mixture into the GFDD system 13

Figure 10. GFDD assembly mounted at the frame at GL&V facility in Hudson Falls, NY 14

Figure 11. GFDD exhaust (a) and ID fan for combustion products evacuation; b – top view; c – side view 14

Figure 12. Spark igniters and flame sensors for the FBC combustion system: a – igniters; b – flame rods; c – double igniters on triple-slot ribbon burner 15

Figure 13. Laboratory thermal processing 16

Figure 14. Raw samples (a) and grinded samples (b) for color scan evaluation 17

Figure 15. Color scanner overview (a) optical eye (b) and product quality protocol (c) 17

Figure 16. Preliminary plots for powder scans 18

Figure 17. Product scans versus processing time at 400ºF (a) and 450ºF (b) 18

Figure 18. GFDD assembly at GL&V facility in Hudson Falls, NY: a – drum on the frame ready for function check; b – GFDD system pre-assembled and ready for shipment to the plant 19

Figure 19. Environmental control systems: a - humidifier; b - dust collector 20

Figure 20. Product loading: a – dumper; b – feeder 21

Figure 21. Product handling: a – sifter; b – transportation; c – discharge 21

Figure 22. System Overview Display 22

Figure 23. Combustion System Display 23

Figure 24. Engineering Area 23

Figure 25. Combustion Sequence 23

Figure 26. GFDD combustion control (a); main control cabinet (b); process overview screen (c) 24

Figure 27. GFDD system fully assembled and ready for process characterization 25
Figure 28. Temperature difference between RTD readings and surface contact measurements 26
Figure 29. Comparison of RTD readings and drum surface measurements at different setpoint temperatures 27
Figure 30. Correlation of RTD readings and drum surface temperature 28
Figure 31. Visual observation of the flame: a – high firing rate (< 500,000 Btu/hr); b – low firing rate (< 100,000 Btu/hr) 29
Figure 32. Sampling port location (a) and portable analyzer Horiba P-250; b – measurement at GL&V pre-shipment test; c – measurement at the plant after GFDD installation 30

List of Tables

Table 1. Test parameters for laboratory processing 16

Abstract

In California, processing dried and dehydrated fruits and vegetables, and evaporated and condensed milk, consumes an estimated 14.5 trillion British thermal units each year. Conventional drying metal cylinders, heated from the inside by condensing steam, are used for this process. The use of steam in heated drums requires the drums to meet American Society of Mechanical Engineers codes for pressure vessels, which limits the steam pressure and, consequently, the shell temperature that reduces the drying capacity. In most cases, drying is the most energy-intensive and temperature-critical aspect of food, chemical, and pharmaceutical products processing. The Gas Technology Institute has developed an innovative high efficiency gas-fired drum dryer concept based on the combination of ribbon flame and advanced heat transfer enhancement techniques. The Gas Technology Institute built a commercial-scale gas-fired drum dryer system and evaluated the system at a California food processing industrial host site. The results of the performance evaluation indicated great potential for the gas-fired drum dryer approach to significantly improve energy efficiency and productivity in a wide spectrum of drum drying applications across energy-intensive industries.

Keywords: Drum drying, gas-fired, energy efficiency, energy intensive processes, food processing

Executive Summary

Introduction

In California, processing dried and dehydrated fruits and vegetables consumes an estimated 6.2 trillion British thermal units (TBtu), and processing evaporated and condensed milk consumes an estimated 8.3 TBtu total energy per year. Both areas use conventional drying metal cylinders which are heated from the inside by condensing steam. Drum drying or drum heating is also used in a variety of other food processes and other industries, such as the pharmaceutical and textile industries.

Using steam requires the drums to meet the American Society of Mechanical Engineers codes for pressure vessels, which limits the steam pressure and, consequently, the shell temperature that reduces their drying capacity. In most cases, drying is the most energy-intensive and temperature-critical aspect of food, chemical, and pharmaceutical products processing.

The new gas-fired drum dryer approach allows a significant increase in the surface temperature of the dryer, increasing the drying rates. Therefore, successful development of the gas-fired drum dryer provides large energy savings to the industry. It will increase energy efficiency from 60-70 percent (steam-operated) to 75-85 percent (gas-operated). The ability to tailor heat transfer along the drum could also lead to product quality enhancements or new product opportunities for California producers.

Project Overview and Approach

The overall objective of the project was to successfully develop and field test a full-scale gas-fired drum drying technology in an industrial food processing production environment while providing high efficiency and operating at low nitrogen oxide (NOx) emission levels.

The Gas Technology Institute with its industrial partners and a participating California food processing host site, designed, engineered, fabricated, installed, and evaluated the gas-fired drum dryer for the selected application in California.

Project Results

The Gas Technology Institute developed an innovative high efficiency gas-fired drum dryer concept based on the combination of ribbon flame and advanced heat transfer enhancement technique (Figure 1). The pilot-scale gas-fired drum dryer unit was designed, fabricated, and successfully tested for a paper drying application (Figure 2). This was followed by the development of a high efficient drum dryer for the California food processing industry, and the installation and evaluation of the high efficient drum dryer at a participating host site.

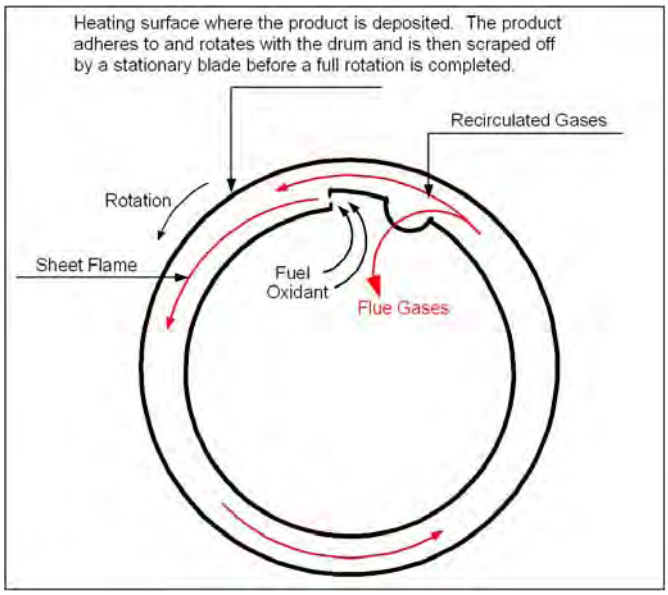

Figure 1. Gas-Fired Drum Dryer concept
(U.S. Patent 6,877,979)

Source: Gas Technology Institute

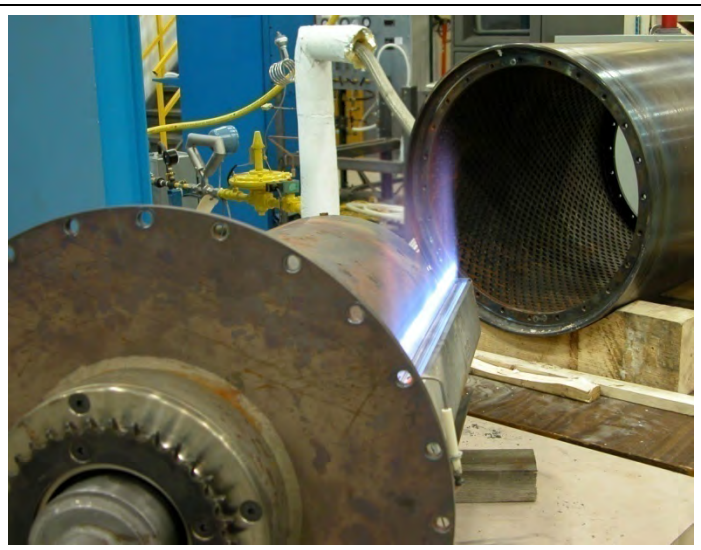

Figure 2. Pilot-scale Gas-Fired Drum Dryer Unit
Photo Credit: Gas Technology Institute

Gas Technology Institute and its manufacturing partners and sponsors have invested more than $2,000,000 in the successful development and testing of the gas-fired drum dryer technology. The gas-fired drum dryer system was developed per the specifications of a selected California food processor and evaluated in a production environment at the participating host site (Figure 3). A license agreement for this technology has been negotiated and is in the final execution stage by Groupe Laperrier & Verreault USA Inc., one of the leading drum dryer manufacturers. Commercialization of gas-fired drum dryer technology assumes manufacturing and marketing the gas-fired drum dryer system through the existing network of sales representatives.

Figure 3. Full-scale Gas-Fired Drum Dryer system

Photo credit: Gas Technology Institute

Conclusions and Recommendations

Evaluation of the installed single-drum system at the participating food processing site clearly demonstrated the following major benefits:

- Increased production capacity over the traditional double-drum steam-heated system currently employed by the industry.
- Low emissions produced by the internal combustion system with a turndown ratio 5:1 that meets California regulations.
- The possibility of varying the drum rotation speed and surface temperature for optimal production adjustment when processing products with different specifications.
- The possibility of using different gaseous fuels such as natural gas, liquefied petroleum gas, syngas, and landfill gas.

Benefits to California

Successful implementation of gas-fired drum dryer technology throughout the qualified California food processing applications will result in significant energy savings within the state's industrial market.

1.0 Introduction and Purpose

1.1. Background: Food Processing in California

California is the top agricultural state in the nation, a position it has held for 50 years. As a natural result, California is also the largest food processing employer in the United States. With an enormous variety of crops, great growing conditions, and increasing demand for prepared food products, California is the center for food processing by shipping $50 billion worth of food products annually (Shoemaker 2006).

California produces a wide variety of food products and is the leading state in many food categories. California surpasses Wisconsin in milk production, and is one of the top ten potato producers. California is the only state producing such specialty foods as almonds, artichokes, raisins, prunes, olives, dates, figs, and pistachios. California's famous produce products are the ingredients in everything from soup to nuts. Crops grown in California may be lightly processed or they may go through many steps before reaching the market.

In California, processing dried and dehydrated fruits and vegetables consumes an estimated 6.2 trillion British thermal units (TBtu), while processing evaporated and condensed milk consumes an estimated 8.3 TBtu total energy per year (Sikirica, Chen et al 2003). Both areas use conventional drying metal cylinders which are heated from the inside by condensing steam. Drum drying or drum heating is also used in a variety of other food processes and other industries, such as the pharmaceutical and textile industries.

Drying and thermal processing of food products for the purpose of preservation for further use is one of the most energy-intensive areas of California industry. That is why cost-effective solutions and technologies for drying improvements are of major interest to the state.

1.2. Drum Drying

Control and improvements to the efficiency of the drying process for food products (Figure 4) is very complex due to the variability of the raw materials and the variety of drying methods, including:

- Rotary dryers
- Spray dryers
- Band dryers
- Tray dryers
- Drum dryers
- Tunnel dryers
- Fluidized bed dryers
- Pneumatic dryers
- Freeze dryers

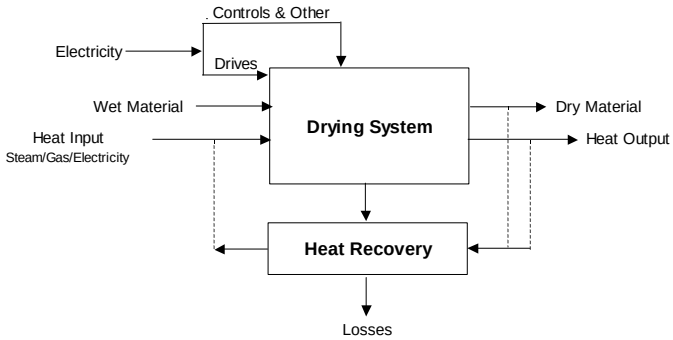

Figure 4. Generic Drying System

Source: Gas Technology Institute

One of the most economical drying methods is drum drying. Drum drying is a continuous indirect heating process. In this operation, food slurry is brought into contact with a hot, revolving drum to form a thin layer on the drum's surface. After sufficient residence time to allow the evaporation of water, the product is removed from the drum by a scraper device (called a *doctor blade*) located usually one-half to three-quarters of a revolution from the point of application. Factors affecting the rate of drying and final moisture content include:

- Residence time on the drum.
- Surface temperature.
- Film thickness.

The method of such dehydration can only be applied to food slurries or liquid food systems and the product must be able to withstand high temperature-short time exposures without undergoing severe quality changes. This method has been most successfully applied to potato drying and has also been used to dry milk, soup mixes, baby foods, and fruit purees.

The California food processing industry employs several types of drum drying equipment to dry the product, the majority of which are single drum and double drum steam-heated systems with different feeding types (Figure 5).

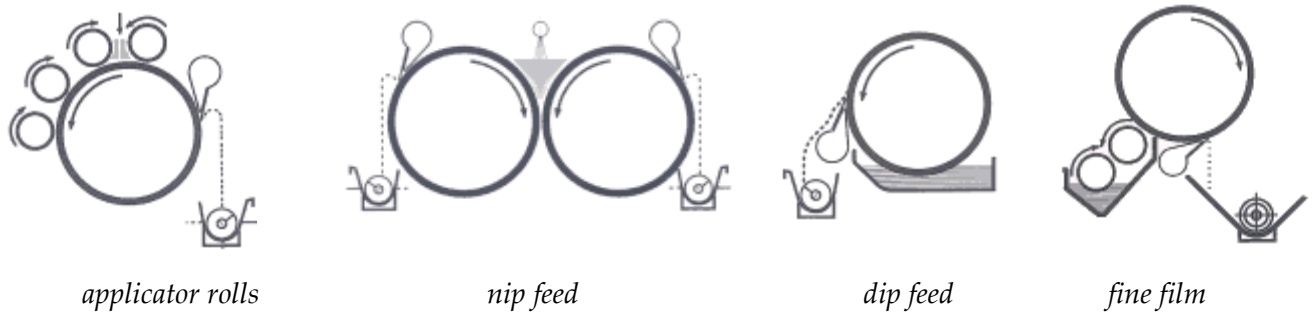

Figure 5. Typical feed systems for drum drying

Source: www.almon-dryers.co.uk

Figure 6 shows a typical single drum system with multiple satellite application rolls for drying high-viscosity liquids or pasty materials such as mashed potatoes, applesauce, fruit-starch mixtures, gelatin, dextrine-type adhesives, synthetic resins, and various starches. Heat has to be supplied to separate the water from the food. The minimum quantity of heat that will remove the required water is that which is needed to supply the latent heat of evaporation; therefore, one measure of efficiency is the ratio of that minimum to the energy actually provided for the process. Sensible heat can also be added to the minimum quantity, as this added heat in the food often couldn't be economically recovered.

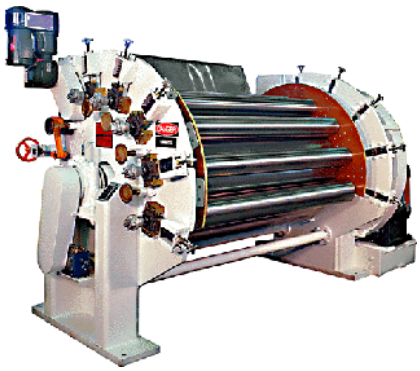

Figure. 6Single drum drying system Buflovak ASDD with multiple "satellite" application rolls

Source: www.buflovak.com

1.3. Energy Efficiency

Energy efficiency in drying is of obvious importance as energy consumption is such a large component of drying costs. Basically, energy efficiency is a simple ratio of the minimum energy needed to the energy actually consumed.

Different dryers have a number of different operating parameters that, if properly controlled, will result in cost-effective product that is of acceptable quality. Poorly controlled dryers waste energy both directly by consuming more energy than necessary and indirectly by yielding a product that does not meet specifications and must be discarded.

Gas-fired drum drying (GFDD) has much higher energy efficiency (up to 75-90 percent) compared to conventional steam-heated dryers (about 60-70 percent) due to improved convective heat transfer inside the drum as well as to strong potential for advanced heat recovery, which is practically impossible in the case of steam-condensate operations.

Anticipated real-life benefits of the GFDD process could lead to increased production throughput and/or the lowering of energy consumption, and cost

2.0 Project Overview and Approach

The overall objective of the project was to successfully develop and field test a full-scale GFDD technology in an industrial food processing production environment while operating at high efficiency and producing low levels of nitrogen oxide (NOx) emissions. In the course of the project, Gas Technology Institute (GTI), together with its industrial partners and the participating California food processing host site, designed, engineered, fabricated, installed, and evaluated the GFDD for the selected application in California. The original work was designed to be conducted in seven major tasks from October 2006 to December 2009. Task activities included:

Task 1: Management and Reporting

- Review meetings and partners coordination
- Monthly and final reporting
- Project administration and communication

Task 2: Host Site Selection and Evaluation

- Site selection in California
- Application evaluation

Task 3: Concept Design

- Design sketches with supporting analysis
- Final specifications
- Measurement, control, and data collection systems design

Task 4: Design Engineering and Fabrication

- Design engineering
- Fabrication, purchasing, and pre-assembling

Task 5: Test Plan Development

- Meeting with plant personnel
- Draft test program

Task 6: Installation and Shakedown

- Field engineering
- Installation by local contractors with project team support

- Shakedown and operating procedure development

Task 7: Data Collection, Processing, and Analysis

- Data collection, processing, and analysis
- Review meeting

This challenging effort is a successful collaboration between GTI, the technology developer; Groupe Laperrier & Verreault USA Inc. (GL&V, the drum dryer manufacturer and technology licensee); Flynn Burner Corporation (FBC, the combustion equipment manufacturer); a major California food processor (the host site); and the California Energy Commission. GTI is the prime contractor and is responsible for the overall execution of the project. GL&V and FBC provided design engineering, fabrication, and installation support, while a major California food processor hosted the GFDD trial and provided the installation and in-kind support to the project team for shakedown and data collection.

Groupe Laperriere & Verreault USA Inc. (www.glv.com)

GL&V is a leader in the North American pulp and paper, chemical, and process industry mid-size dryer market. GL&V currently employs some 1,400 highly motivated people in worldwide locations; these employees are in large part highly trained and skilled technicians, engineers, and business people. From state-of-the-art manufacturing facilities in Canada and the United States, the company delivers to clients worldwide. GL&V also participates in various partnerships on a permanent and temporary basis, all associated with its core business, pulp and paper, food, chemical, or process equipment.

Flynn Burner Corporation (www.flynnburner.com)

FBC has been in business since 1942, manufacturing combustion equipment and systems utilizing direct flame impingement and ribbon burner technology. The company has a strong engineering tradition and serves the food, baking, paper, and plastics industries as well as fossil-fueled utilities. Burners, ovens, and other combustion systems are supplied to all regions in the United States as well as Asia, Canada, and Europe.

2.1. GFDD Technology: Description and Design

In a drum dryer, the material to be dried is applied in a thin layer to the outside hot surface of an internally heated rotating drum. The product is dried or heated in contact with the drum and scraped off in the form of a powder or film. GTI has developed an innovative alternative to traditional steam-heated systems. The high efficiency GFDD concept is based on the combination of ribbon flame and advanced heat transfer enhancement technique. A GFDD

system was originally designed and patented by GTI, engineered and fabricated by industrial partners GL&V (Hudson Falls, New York) and FBC (New Rochelle, New York), and installed and evaluated for the full-scale field trial at the host food processing plant. The basic concept allows processing a wide spectrum of food products if implemented in the range from the drum dryer to the rotary drum (Abbasi and Chudnovsky 2005).

Design is a very important step in any development work, including the review of the previous pilot-scale GFDD performance evaluation results (Chudnovsky, Kozlov and Sherrow 2005), technical analysis of the production rate improvement through a baseline audit of the host site steam-heated double drum system, and numerical simulation of the internal drum components (see selected results in Appendix A).

Figure 7 illustrates the simulation results (static temperature) for the drum operating at one

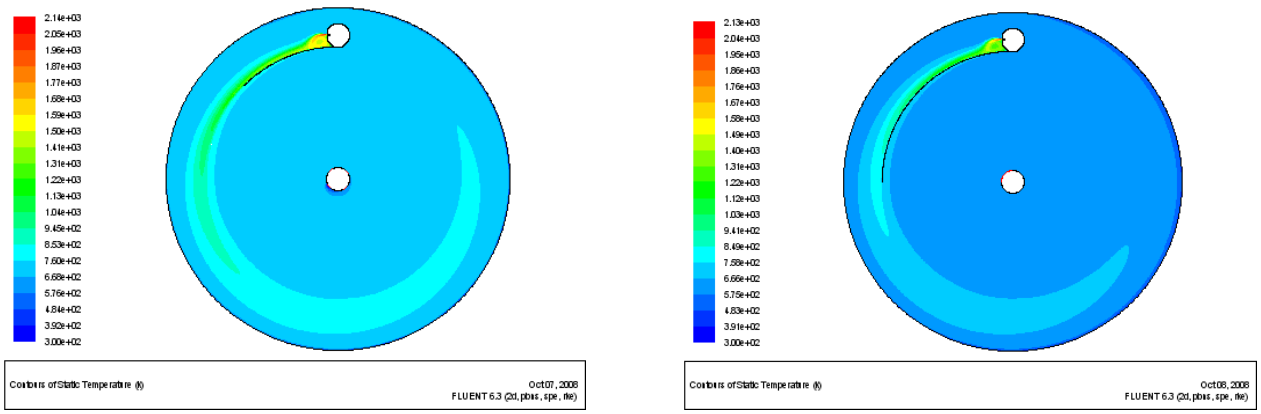

a b

Figure 7. Static temperature field at different lengths of the combustion product deflector: a – short; b – long

Source: Gas Technology Institute

million (MM) Btu/hour with a short (45 degrees) and long (90 degrees) combustion product deflector located at 2.75″ from the rotating shell.

Detailed analysis of the previous pilot-scale GFDD evaluation demonstrated the strong potential of this technology for further improvement of the thermal processing of the product without serious capital investments. Careful review raised several technical issues associated with the high temperature operation and combustion system ignition which must be addressed before the first commercial unit is installed. These issues include:

- Reliable bearing operation at the elevated temperature.
- Protection of the high voltage ignition wire to provide a reliable ignition by delivering the spark into the right spot of the gas-fired burner.
- National Environmental Policy Act (NEPA) and National Fire Protection Association (NFPA) compliance.

- Capability of the multi-zone combustion system to locate the air/gas mixers (outside of the drum or inside the drum) that linked to the location of the appropriate control valves and programmable logic controllers.

Jointly with the industrial partners' and participating California food processors' support, the project team successfully resolved the above issues for the full-scale system evaluation. To simplify the design process and meet the budget and schedule limitations of the current project, the bearings were selected from the shelf to fit the standard GL&V housings. In order to protect the bearings from excessive overheating, GL&V design engineers have selected the special high-temperature lubricant DuPont Krytox that has a dropping point (thickener melting point) of 325°C (617°F). Special thickener formulations provide useful lubrication up to 371°C–399°C (700°F–750°F), or higher with re-lubrication, which worked perfectly with industrial bearings that operate in a high temperature environment. Figure 8 illustrates the selected bearings and the housing employed.

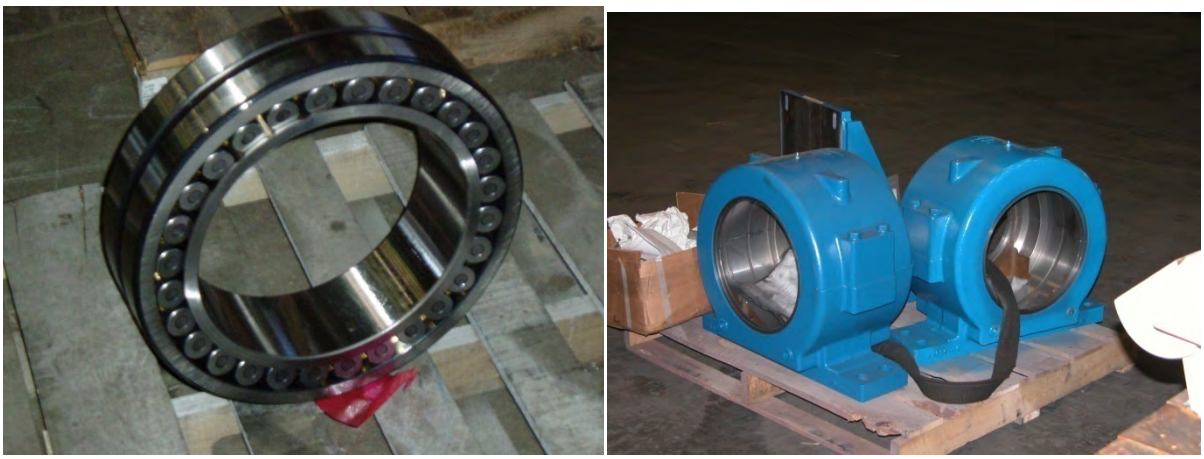

(a) (b)

Figure 8. GFDD bearing (a) and bearing housing (b) employed for the full-scale unit

Photo Credit: Gas Technology Institute

The GFDD design assumed introduction of the premixed flow of gaseous fuel and combustion air from the opposite side of the combustion product exhaust (Figure 9). To provide the simplified waste heat recuperation, the combustible mixture entering the GFDD is routed through the internal journal and is distributed by the flex feeders; in this way, the combustible mixture was preheated by the combustion product escaping from the drum. Such a simple recuperative approach allows preheating the fuel/air mixture to approximately 148^{0}C (300^{0}F) and significantly reduces the heat losses with the flue gas.

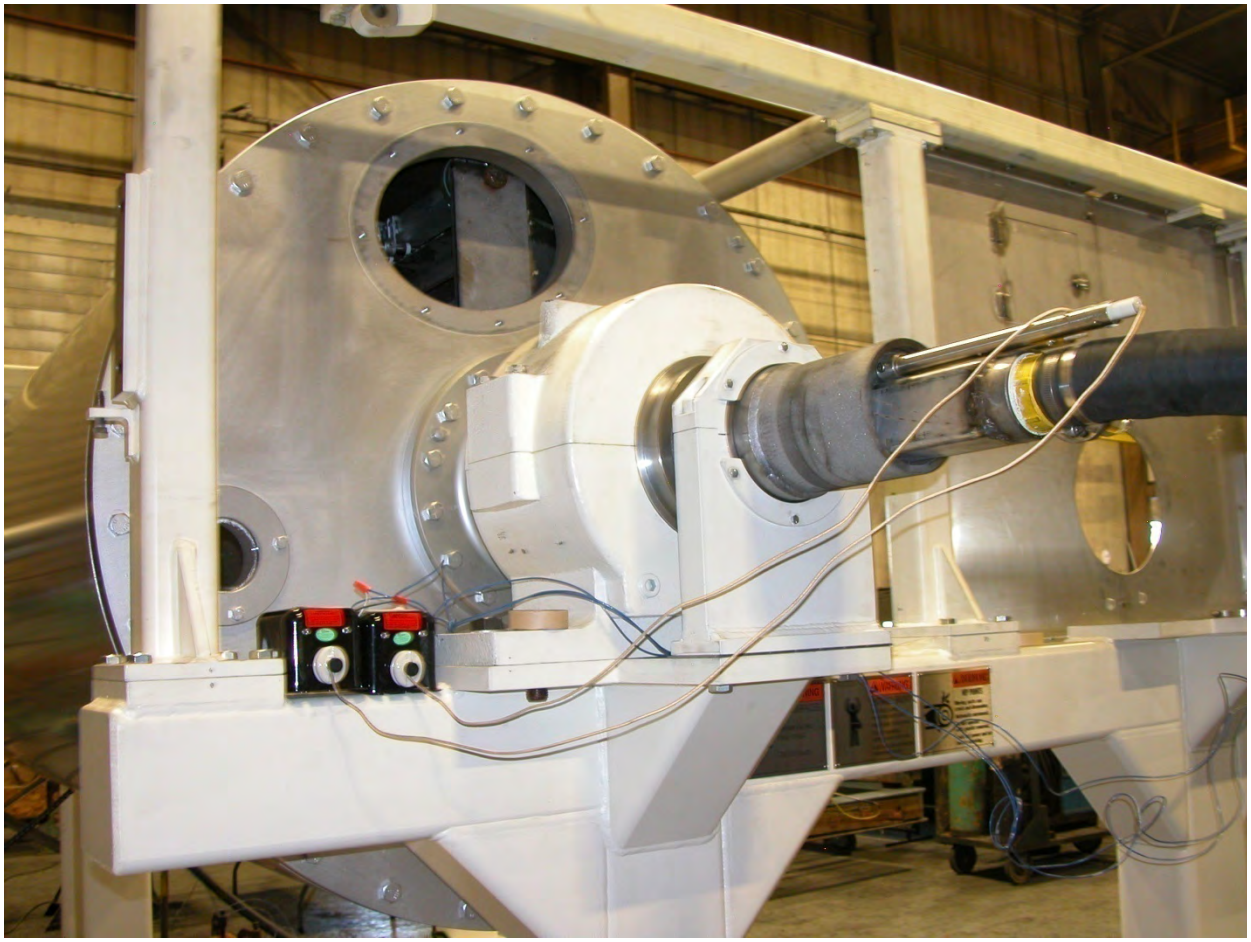

Figure 9. Introduction of the air/gas mixture into the GFDD system
Photo credit: Gas Technology Institute

Both journals and drum sides were treated with the special Jet-Hot coating to reduce the heat losses to the environment. Because of its low emissivity and insulating effect, this coating creates a thermal barrier to protect journals—inside and out—while reducing heat transfer into the drum. For more details, please visit http://www.jet-hot.com/.

The drum shell was manufactured from the cast iron traditionally used for this type of drum. The shell thickness of 1.625 inches was determined from the standard engineering calculations to secure drum integrity at the operating rotation speed and temperature level. Figure 10 illustrates the GFDD mounted on the frame with a chain-sprocket driving system prior to final assembly for the pre-shipment test.

Figure 10. GFDD assembly mounted at the frame at GL&V facility in Hudson Falls, NY

Photo credit: Gas Technology Institute

To promote the combustion products evacuation from the GFDD, the exhaust fan was implemented into the exhaust train as shown in Figure 11.

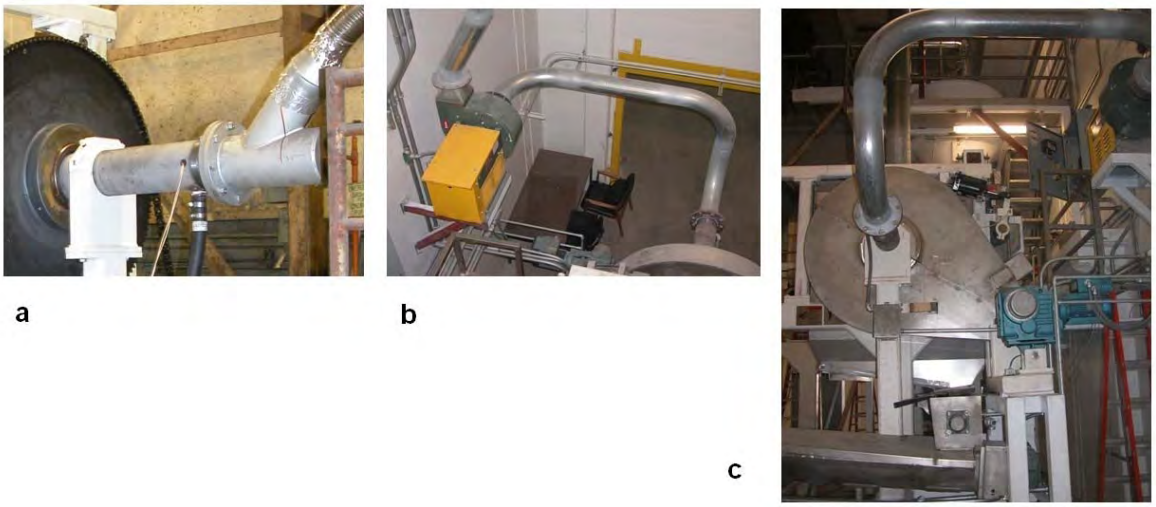

Figure 11. (a) GFDD exhaust and ID fan for combustion products evacuation; (b) top view; (c) side view

Photo Credit: Gas Technology Institute

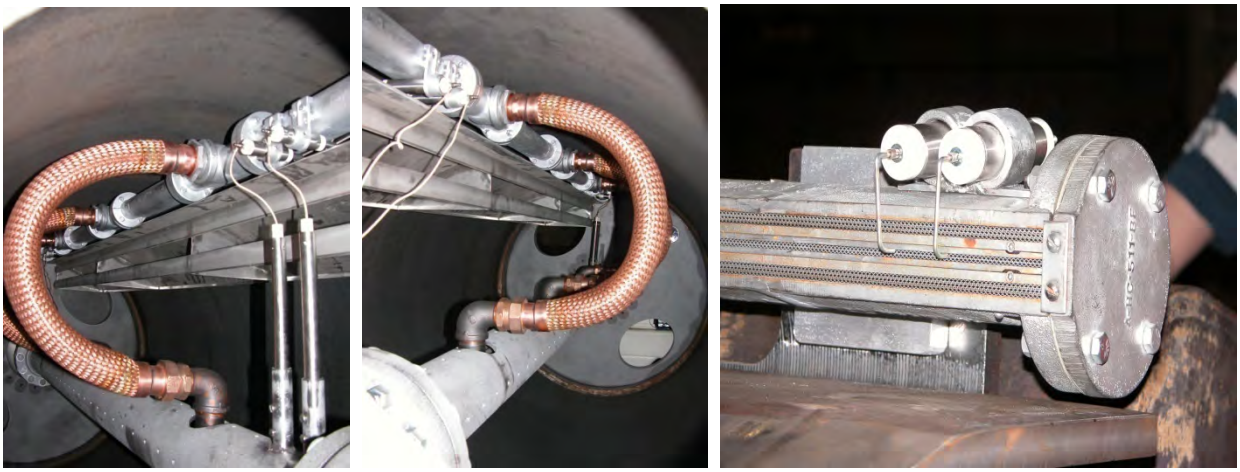

a b c

Figure 12. Spark igniters and flame sensors for the FBC combustion system: a – igniters; b – flame rods; c – double igniters on triple-slot ribbon burner

Photo Credit: Gas Technology Institute

To secure the spark ignition by delivering 10,000 volts to the igniter installed at the tip of the ribbon burner, the ignition wire was routed through the drum construction inside the stainless steel housing with intermediate high-temperature ceramic bushings. Figure 12 illustrates the spark ignition and flame-sensing system installed at the GFDD full-scale trial unit.

To eliminate the affect of high voltage and ensure the flame propagated across the entire length of the ribbon, spark igniters were installed at one side of the burner while the flame-sensing electrodes were installed at the opposite side of the burner. To ensure reliable flame-sensing, the system employs two flame rods as well as igniters, and the operator has the option of selecting the individual sensor and igniter.

Because the GFDD operates in dusty environments, NEPA and NFPA requirements were taken into consideration and appropriate components and enclosures were implemented into the design.

The set of fabrication drawings, schemes, and piping and instrumentation diagrams (Appendix B) completed the full-scale design development of the GFDD.

2.2. Laboratory Thermal Processing

To identify the initial benchmark for the full-scale GFDD operation, in-house thermal processing of the generic product was performed. Figure 13 illustrates the laboratory setup that was used for the thermal processing of the product, per Table 1.

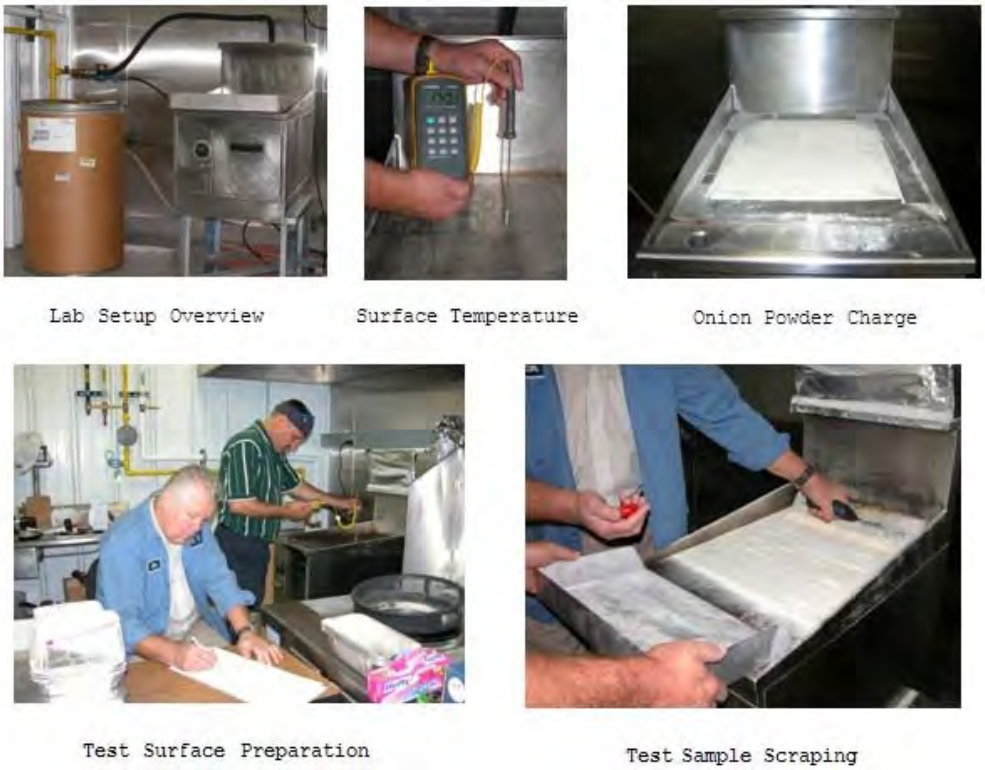

Figure 13. Laboratory thermal processing

Photo credit: Gas Technology Institute

Table 1. Test parameters for laboratory processing

Hot Surface Temperature, ºF	Processing Time, second
320, 360, 400, 450, 500	10, 25, 50, 75 (20, 50, 80)

Source: Gas Technology Institute

The effect of mixing the thermally processed product with non-processed product on the overall color scan was also evaluated. The proportions tested were 25/75 percent, 50/50 percent, and 75/25 percent.

During the course of the laboratory evaluation for plant quality control (color scan), 186 samples were produced (Figure 14).

Figure 14. Raw samples (a) and grinded samples (b) for color scan evaluation
Photo Credit: Gas Technology Institute

Figure 15. Color scanner overview (a) optical eye (b) and product quality protocol (c)
Photo Credit: Gas Technology Institute

A color scan was performed using the Agtron M-45 surface color scanner calibrated according to the certified procedure approved by the plant management (Figure 15). The results of the evaluation are presented in Appendix C.

Preliminary analysis of the processed powder samples allowed the project team to generate the families of curves, clearly indicating the dependence of the product quality on the temperature level and processing time.

Figure 16 presents examples of the preliminary plots for the powder scans. The product quality range is about 69-75 percent (onion powder) depending on the customer's specifications.

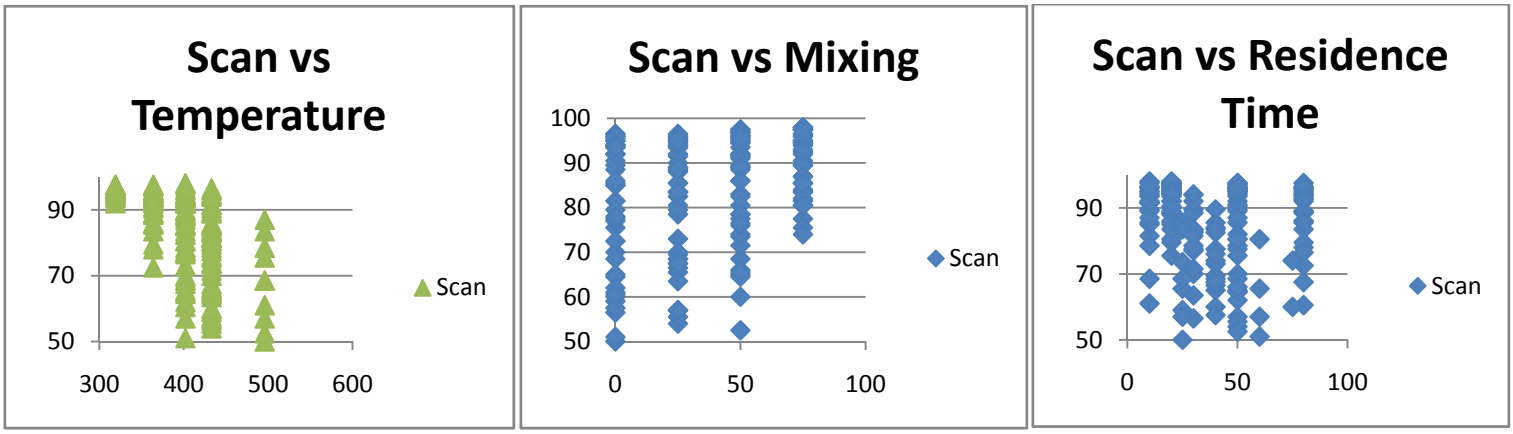

Figure 16. Preliminary plots for powder scans

Source: Gas Technology Institute

Examples of the preliminary product processing results for temperature levels of 400ºF and 450ºF are presented in Figure 17.

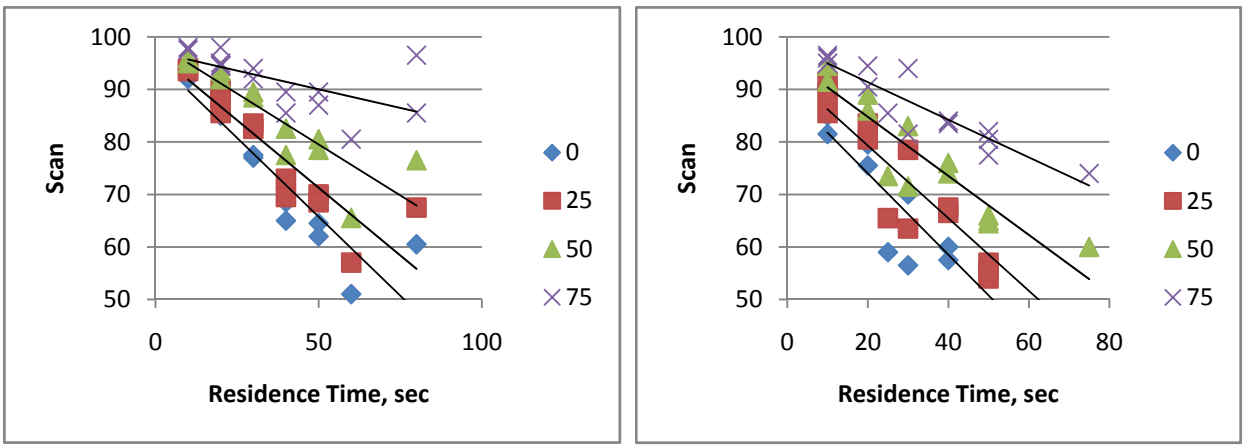

a b

Figure 17. Product scans versus processing time at 400ºF (a) and 450ºF (b)

Source: Gas Technology Institute

From the obtained data the operator could select initial conditions for further tuning the GFDD system to optimized and efficient operation.

2.3. Full-Scale System: Field Engineering and Installation

Upon completion of the series of pre-shipment tests, all the components were delivered to the participating food processing plant for final assembly and installation. The host site performed extensive field engineering and provided the qualified space and required utilities, including the air humidity control and duct collecting unit. The appropriate construction permits were obtained by the host.

Prior to shipping the partially pre-assembled GFDD unit to the California host site, the system was extensively evaluated at the manufacturing facility. The facility performed a functioning check of all mechanical and electrical components as well as a check of the combustion

performance of the burner-controls system. Figure 18 illustrates the partially assembled GFDD at the GL&V facility in Hudson Falls, New York.

Figure 18. GFDD assembly at GL&V facility in Hudson Falls, NY: a – drum on the frame ready for function check; b – GFDD system pre-assembled and ready for shipment to the plant

Photo Credit: Gas Technology Institute

The GFDD system was installed in a specially designed framework that could accommodate a second GFDD, if production increases so require. The product handling equipment was provided by the host as in-kind contribution to the project and was installed by local contractors. The following series of photographs is included to illustrate the progress of GFDD installation.

GFDD installed at the plant

System installation in progress

Photo Credit: Gas Technology Institute

Vibratory feeder

Combustion controls

GFDD drive-side view

Photo Credit: Gas Technology Institute

A number of ancillary units were installed for environmental control and product handling.

Figure 19. Environmental control systems: a - humidifier; b - dust collector (continued)
Photo Credit: Gas Technology Institute

Figures 19–21 illustrate the humidifier, dust collector, product loader, sifter, and final product discharge units.

Figure 20. Product loading: a – dumper; b – feeder
Photo Credit: Gas Technology Institute

Figure 21. Product handling: a – sifter; b – transportation; c – discharge
Photo Credit: Gas Technology Institute

The detailed operating/installation manual for the GFDD system is presented in Appendix D. The maintenance procedure is to be developed by plant operations personnel in compliance and coordination with the operating manual.

2.4. Combustion Controls and Main Control Panels

The combustion control system was developed by FBC based on the Allen-Bradley Industrial Computing system. The system is used for GFDD surface temperature control integrated with the product feed, rotation speed, and exhaust fan capacity. Below are the selected screens to be used by the GFDD operator.

The overview screen (Figure 22) indicates the overall picture of the GFDD, including rotation speed, surface temperature distribution across the drum, as well as setpoint temperature and average value of the resistance temperature detector (RTD) measurements. From this screen the operator could start/stop drum rotation.

Figure 22. System Overview Display

Source: Flynn Burner Corporation

The combustion system (burner) screen (Figure 23) indicates firing rate along with exhaust fan capacity and actual average temperature of the drum. It also indicates manual or automatic operations and specifies the igniter and sensor that are being used. Using this screen, the operator is able to light the burner by initiating the purging/ignition sequence, and to immediately shutdown the system, if necessary. The operator also can change the igniter or sensor in case of failure.

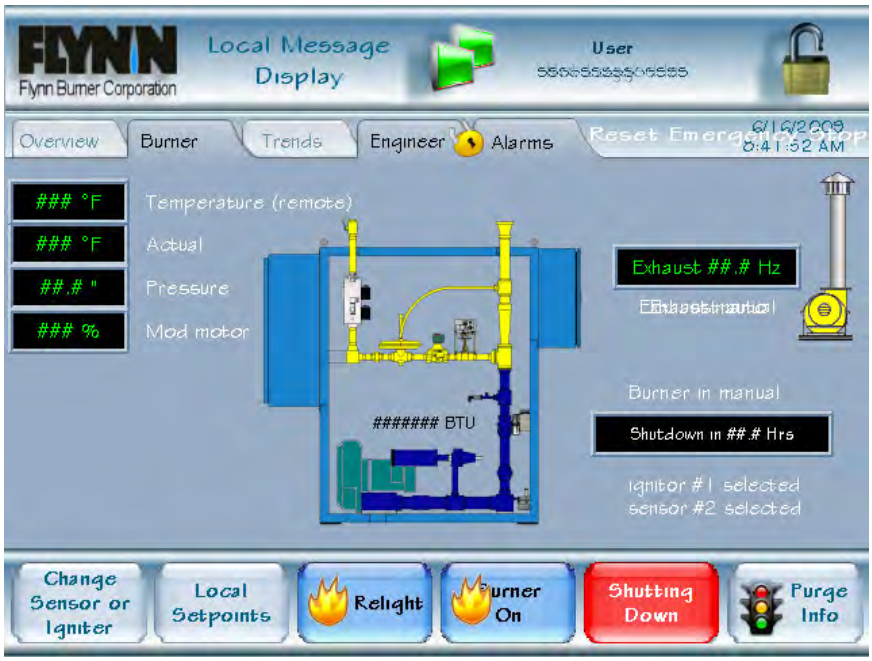

Figure 23. Combustion System Display

Source: Flynn Burner Corporation

The engineering screen (Figure 24) allows the operator to configure the burner and set the GFDD operating temperature and firing rate. It also allows the operation of the induced draft (ID) fan in manual mode.

The operator has access to several more screens that enable observation of operating procedures such as the combustion sequence indicated above (Figure 25).

Figure 24. Engineering Area

Source: Flynn Burner Corporation

Figure 25. Combustion Sequence

Source: Flynn Burner Corporation

The detailed manual of the GFDD combustion system operation is presented in Appendix E.

The GFDD combustion control system was successfully integrated with the main control system. The main control panel shown in Figure 26 provides overall GFDD operation control and product handling equipment. The main control panel was developed by plant personnel and is not further discussed in this report.

Figure 26. GFDD combustion control (a); main control cabinet (b); process overview screen (c)
Photo Credit: Gas Technology Institute

3.0 Project Results: GFDD Performance Evaluation

The GFDD system was successfully installed as indicated in Figure 27 and fired at different operating conditions so the combustion system could be adjusted for the best performance. The system characterization procedure was developed (Appendix F) and currently is under implementation for transferring the GFDD system to the plant operating personnel.

Figure 27. GFDD system fully assembled and ready for process characterization

Photo Credit: Gas Technology Institute

Upon completed shakedown, the system performance was evaluated in an operating range of setpoint temperature (65C^0-148^{0}C, or 150^{0}F–300^{0}F) at the selected drum rotation speed. Figure 28 illustrates 10 hours of evaluation performance without product application.

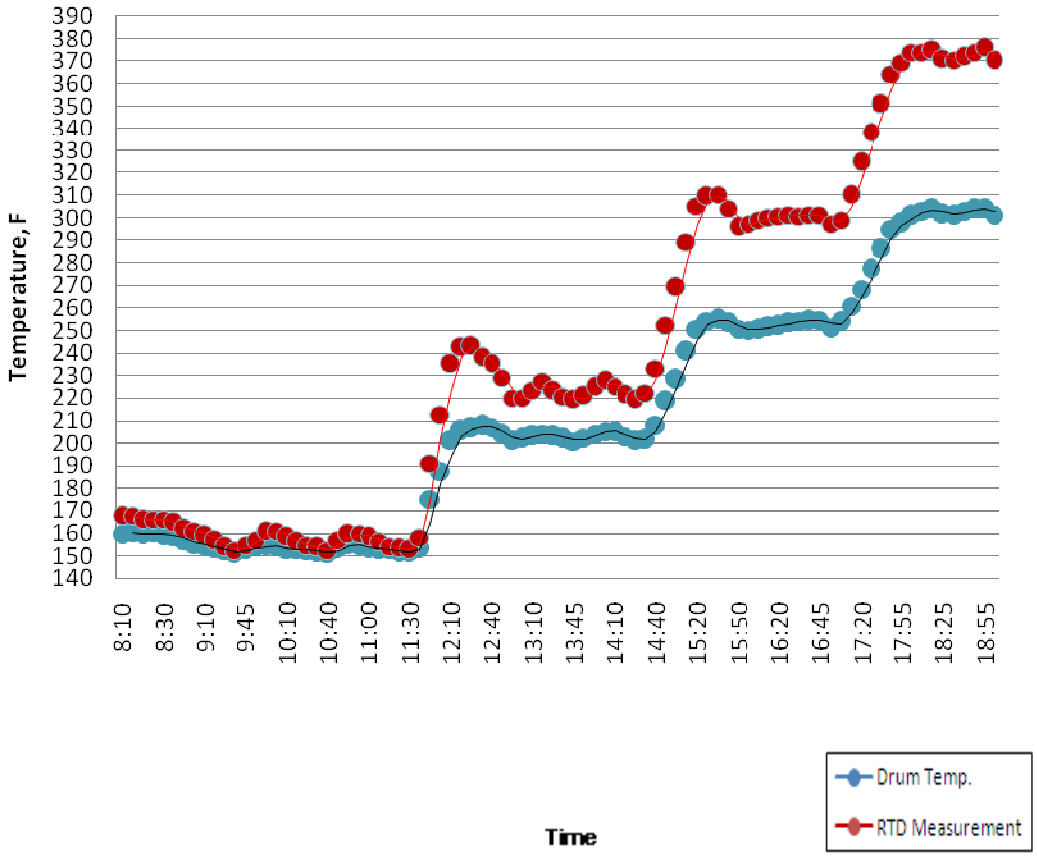

Figure 28. Temperature difference between RTD readings and surface contact measurements
Source: Gas Technology Institute

All the measurements were made at a drum speed of three revolutions per minute, a doctor blade load of 15 pounds per square inch, and no product application. It is remarkable that as higher setpoint temperature as lower temperature peak while the drum is preheating to setpoint, so the low firing rate value (currently set as 3" water column) should be determined during the product run to compensate ambient losses and product load. Moreover, as higher setpoint temperature level as lower deviation of the temperature readings over the average value due to better heat distribution uniformity, so steady-state conditions are expected after the drum preheating period. The surface temperature uniformity across the drum that is measured by RTD is more scattered than measured by contact thermocouple, so in order to improve the temperature profile the doctor blade has to be adjusted more carefully across the drum.

Figure 29 demonstrates the GFDD surface temperature cycling at different setpoint temperature levels.

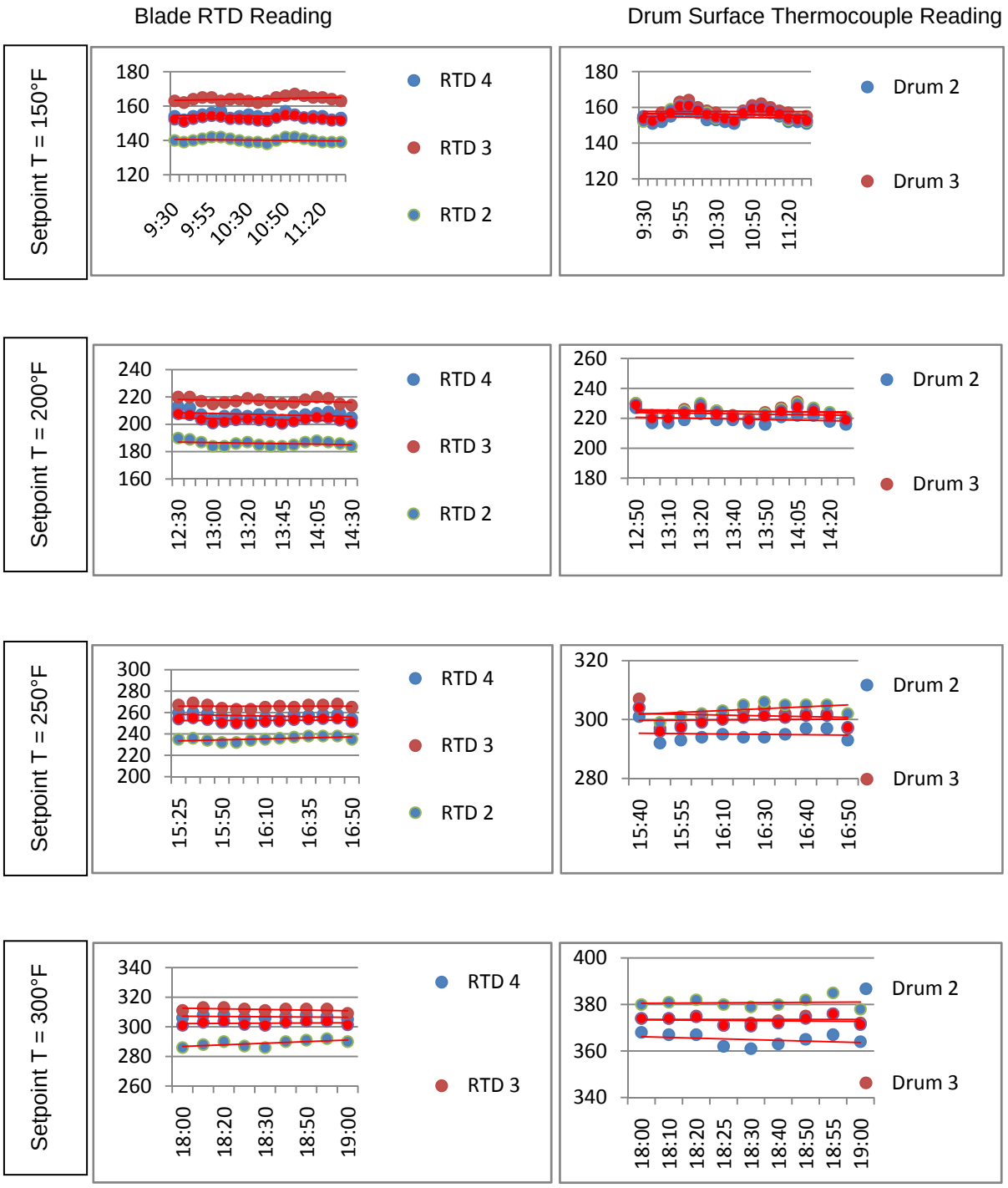

Figure 29. Comparison of RTD readings and drum surface measurements at different setpoint temperatures

Source: Gas Technology Institute

It was observed that as higher setpoint temperature level as large difference between the RTD and drum readings (see Figure 30), so such a correlation should be established during the product runs (per product scan).

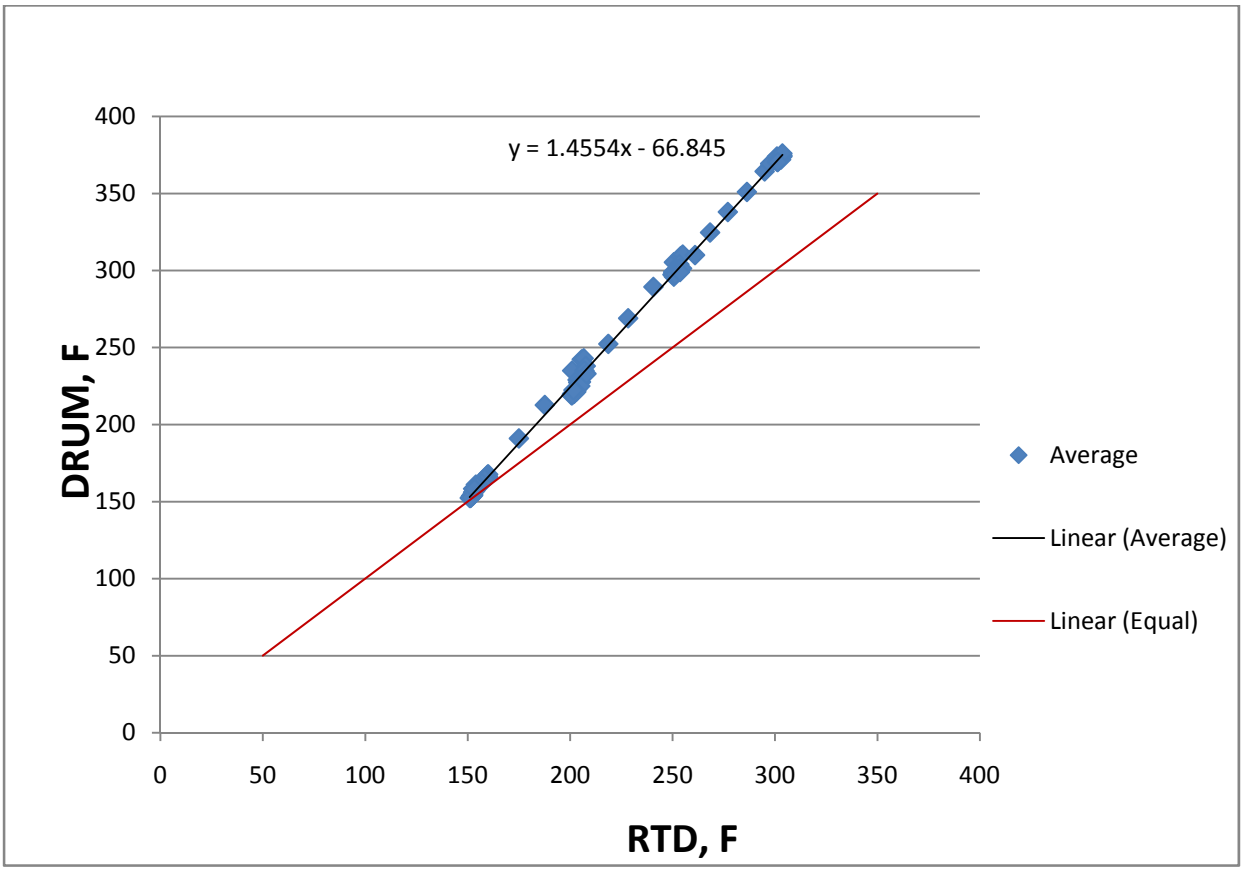

Figure 30. Correlation of RTD readings and drum surface temperature

Source: Gas Technology Institute

The GFDD combustion system provides a pre-mixed low emission operation. The quality of natural gas combustion was evaluated by both visual observation and emissions measurements. The combustion system logic was designed to operate the system in such a way that while approaching the setpoint temperature the firing rate slows down from high value to low value depending on the heating rate, and upon reaching a setpoint temperature the burner is ceased until the actual temperature reading will not drop two degrees below the setpoint value. Then the burner is re-ignited at a low firing rate to heat the drum to setpoint temperature again. The "on and off" operation of the burner indicated that at a low setpoint temperature level the GFDD operates a shorter time than at a high setpoint temperature level. However, even at high setpoint values the GFDD system produces less environmental impact than continuously operating systems. Figure 31 records the visual observation of the ribbon flame at high firing and low firing operations.

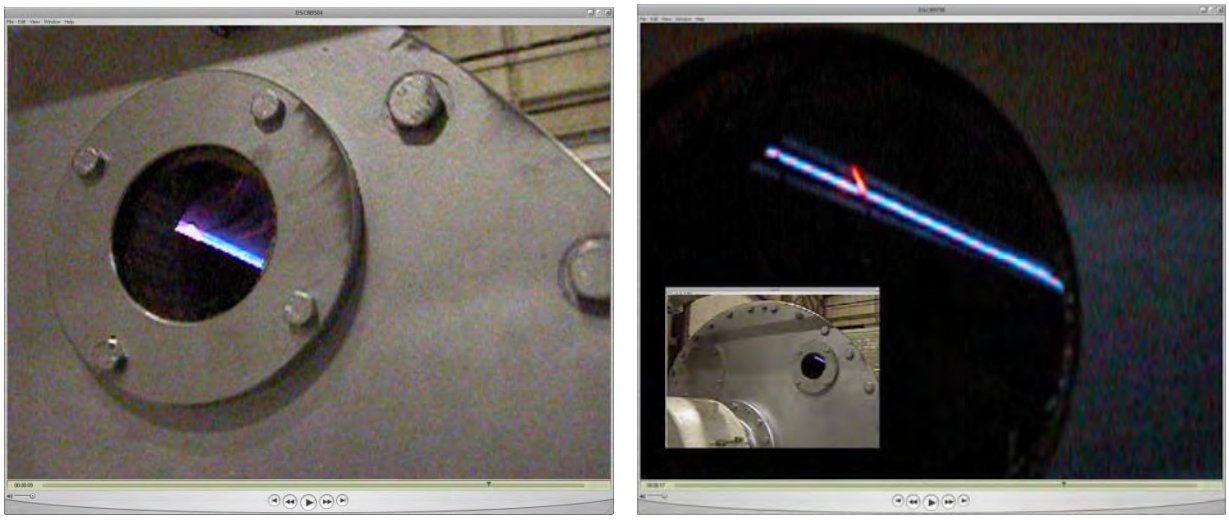

Figure 31. Visual observation of the flame:
a – high firing rate (< 500,000 Btu/hr); b – low firing rate (< 100,000 Btu/hr)
Photo Credit: Gas Technology Institute

The composition of the exhaust gas was measured during the pre-shipment factory acceptance test and after complete installation in the field. Both times the carbon dioxide (CO2) and NOx emissions did not exceed California regulation limits for such installations.

The emission measurements were performed by the GTI team using the state-of-the-art portable gas analyzer HORIBA P-250. Figure 32 illustrates the sampling port, analytical equipment, and measurement screen. The GTI measurements were confirmed via independent measurement by plant environmental contractors (Blue Sky Environmental Inc.) sampling the flue gas from the same port at the GFDD exhaust. For the gas analysis, Blue Sky Environmental Inc. used the traditional set of certified analytical equipment, Thermal Electron and Rosemont brands. Through the set of emissions measurement to prove the repeatability of the data, the following ranges of exhaust emissions were received for the steady state GFDD operation (corrected at 3% oxygen):

- CO2: 15-25 parts per million by volume (vppm)
- NOx: 30-50 vppm
- Total Hydrocarbons: < 5 vppm

Figure 32. Sampling port location (a) and portable analyzer Horiba P-250; b – measurement at GL&V pre-shipment test; c – measurement at the plant after GFDD installation

Source: Gas Technology Institute

Obtained results clearly indicate a low environmental impact compared to a steam generation facility that produces steam for traditional steam-heated drums

4.0 Conclusions and Recommendations

The overall aim of this project was to apply energy-saving and low-emission technology to a food processing application and demonstrate the benefits at a California-based industrial facility. The GFDD system was successfully developed and installed at a major California-based food processing plant and evaluated in a wide range of operating temperatures. The anticipated performance benefits were proven along with the low emissions operation.

4.1. Commercialization Potential

GTI, together with minor subcontractor Bedrosian & Associates (a Disabled Veteran Business Enterprise [DVBE]), identified a list of potential food processors that might benefit from GFDD technology. Bedrosian & Associates conducted a national search and contacted several hundred food processing plants to explore interest in GFDD and to initiate beneficial working contacts. A brief report on these efforts is presented in Appendix G.

4.2. Recommendations

The host site will tune up the system per product specifications and continue monitoring the GFDD performance in a product application environment. GTI, jointly with GL&V, will continue marketing this energy-saving technology for California food processors per the list of potentially interested food processors developed by Bedrosian & Associates, and will initiate the technology commercialization process nationwide.

4.3. Benefits to California

Evaluation of the installed single drum system at the participating food processing site clearly demonstrated the following major benefits:

- Increased production capacity over the traditional double-drum steam-heated system currently employed by the industry.
- Low emissions produced by the internal combustion system with a turndown ratio 5:1 that meets California regulations.
- The possibility of varying the drum rotation speed and surface temperature for optimal production adjustment when processing products with different specifications.
- The possibility of using different gaseous fuels such as natural gas, liquefied petroleum gas, syngas, landfill gas, etc.

Successful implementation of gas-fired drum dryer technology throughout the qualified California food processing applications will result in significant energy savings and cost within the state's industrial market.

5.0 References

Abbasi, Hamid and Yaroslav Chudnovsky. 2005. *Process and apparatus for indirect-fired heating and drying.* US Patent 6,877,979.

Chudnovsky, Yaroslav, Aleksandr Kozlov and Lester Sherrow. 2005. *Laboratory development of high capacity gas-fired paper dryer*. U.S. Department of Energy. Final Report FC36-01GO10621.

Shoemaker, Dr. Sharon. 2006. *Technology Roadmap on Energy Efficiency in California Food Processing Industry*. University of California, Davis. CEC 500-2006-073.

Sikirica, Steve, James Chen, et al. 2003. *Research Collaboration Program: Food Processing Technology*. Report No. GRI-03/0075.

6.0 Glossary of Terms

CO2	Carbon dioxide
DVBE	Disabled Veteran Business Enterprise
Doctor blade	A scraper device used to remove processed product from a drum dryer
FBC	Flynn Burner Corporation, the combustion equipment manufacturer
GFDD	Gas-Fired Drum Dryer
GL&V	Groupe Lapierrier & Verreault USA Inc., the drum dryer manufacturer and potential technology licensee
GTI	Gas Technology Institute, the technology developer
ID fan	Induced draft fan
MMBtu	Million British thermal units
NEPA	National Environmental Policy Act
NFPA	National Fire Protection Association
NOx	Nitrogen oxides
RTD	Resistance temperature detector
TBtu	Trillion British thermal units
THC	Total hydrocarbons
Vppm	Parts per million by volume
WC	Water column

Appendix

Appendix A:
Computational Fluid Dynamics Modeling Results

Appendix B:
Design Drawings, Sketches, Piping and Instrumentation Diagrams

Appendix C:
Powder Scan Results

Appendix D:
Operating Manual (Groupe Laperrier & Verreault USA Inc.)

Appendix E:
Combustion Controls Manual (Flynn Burner Corporation)

Appendix F:
System Characterization Procedure

Appendix G:
Bedrosian & Associates (DVBE) Report on Gas-Fired Drum Dryer Marketing Calls

Appendix A: Computational Fluid Dynamics Modeling Results

0.5 MMbtu/hr

Distance between burner and drum is 2 3/4".

Partition - 45 degree

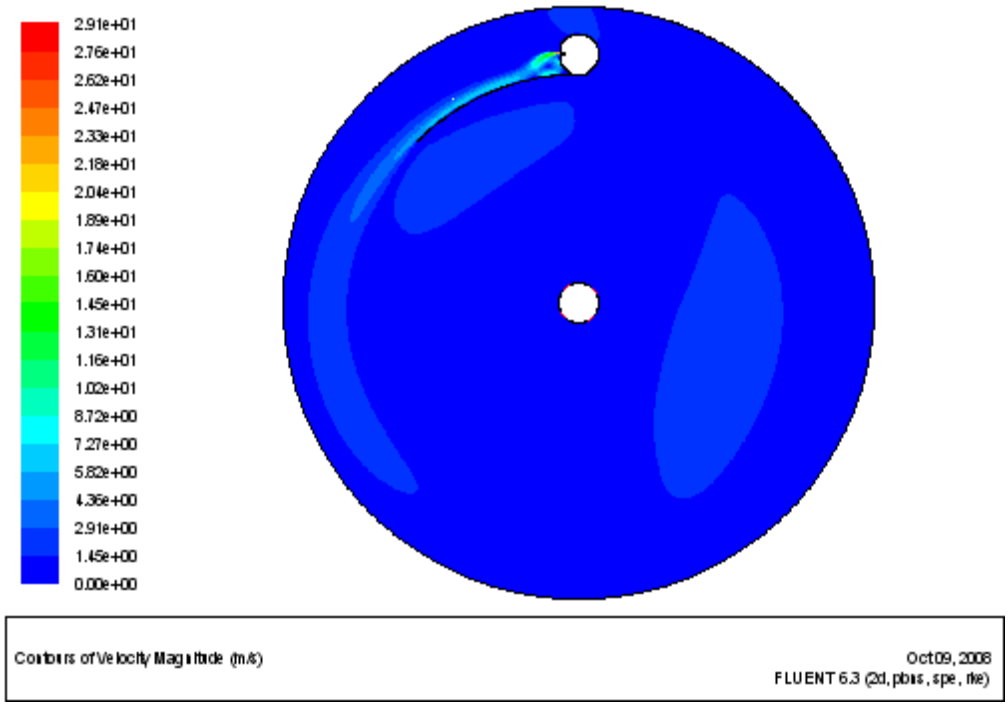

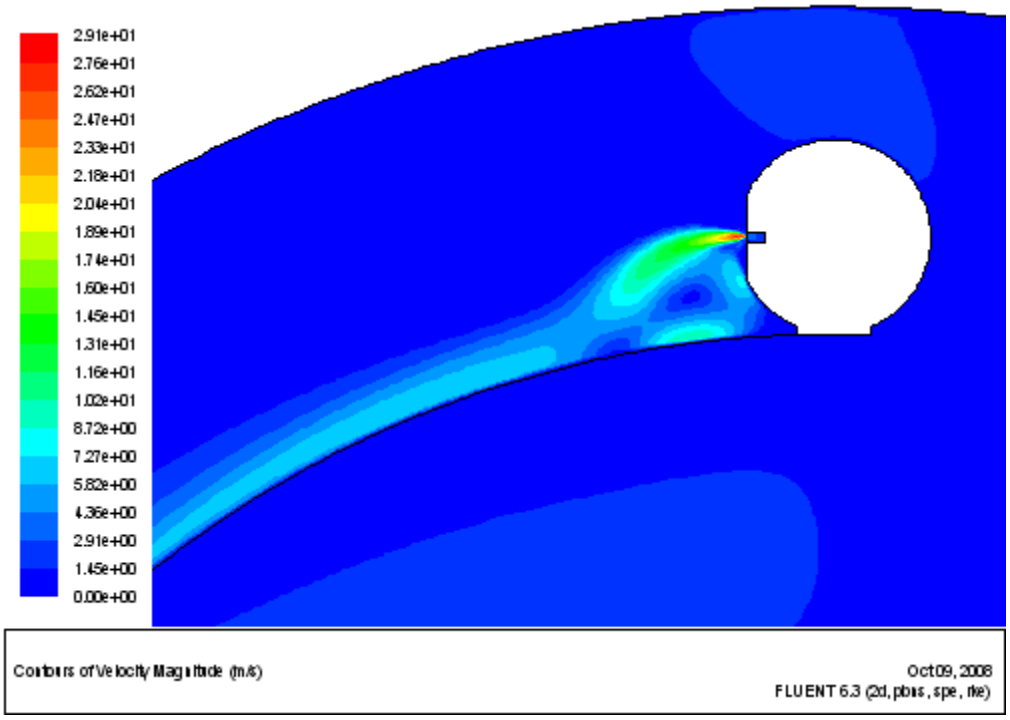

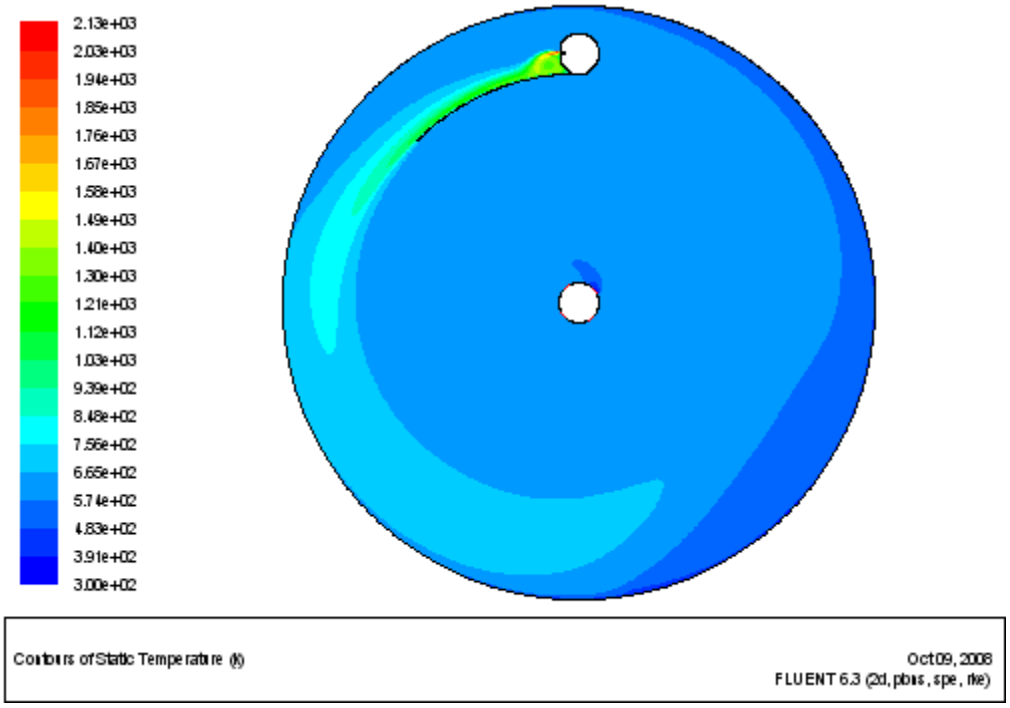
2.13e+03
2.03e+03
1.94e+03
1.85e+03
1.76e+03
1.67e+03
1.58e+03
1.49e+03
1.40e+03
1.30e+03
1.21e+03
1.12e+03
1.03e+03
9.39e+02
8.48e+02
7.56e+02
6.65e+02
5.74e+02
4.83e+02
3.91e+02
3.00e+02
Contours of Static Temperature (k)
Oct 09, 2008
FLUENT 6.3 (2d, pbns, spe, rke)

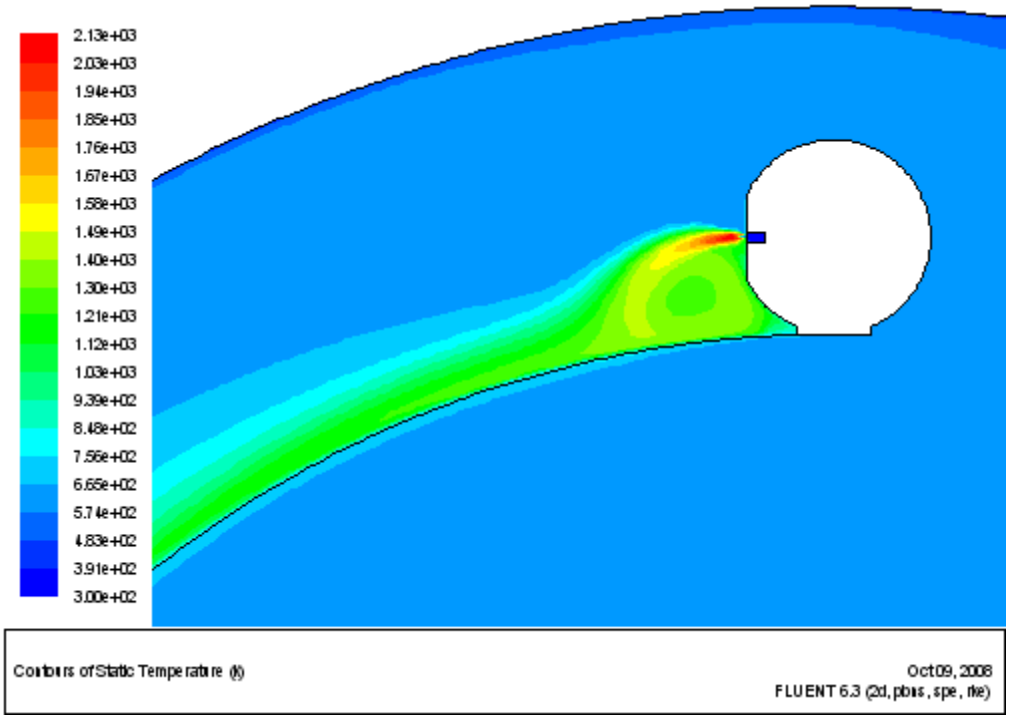
2.13e+03
2.03e+03
1.94e+03
1.85e+03
1.76e+03
1.67e+03
1.58e+03
1.49e+03
1.40e+03
1.30e+03
1.21e+03
1.12e+03
1.03e+03
9.39e+02
8.48e+02
7.56e+02
6.65e+02
5.74e+02
4.83e+02
3.91e+02
3.00e+02
Contours of Static Temperature (k)
Oct 09, 2008
FLUENT 6.3 (2d, pbns, spe, rke)

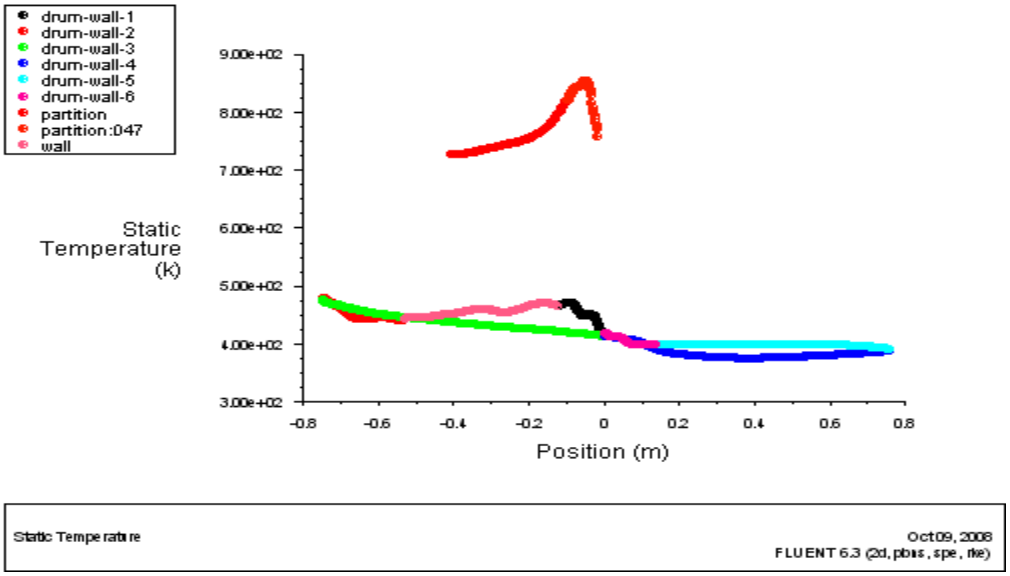
drum-wall-1
drum-wall-2
drum-wall-3
drum-wall-4
drum-wall-5
drum-wall-6
partition
partition:047
wall
Static Temperature (k)
9.00e+02
8.00e+02
7.00e+02
6.00e+02
5.00e+02
4.00e+02
3.00e+02
-0.8
-0.6
-0.4
-0.2
0
0.2
0.4
0.6
0.8
Position (m)
Static Temperature
Oct 09, 2008
FLUENT 6.3 (2d, pbns, spe, rke)

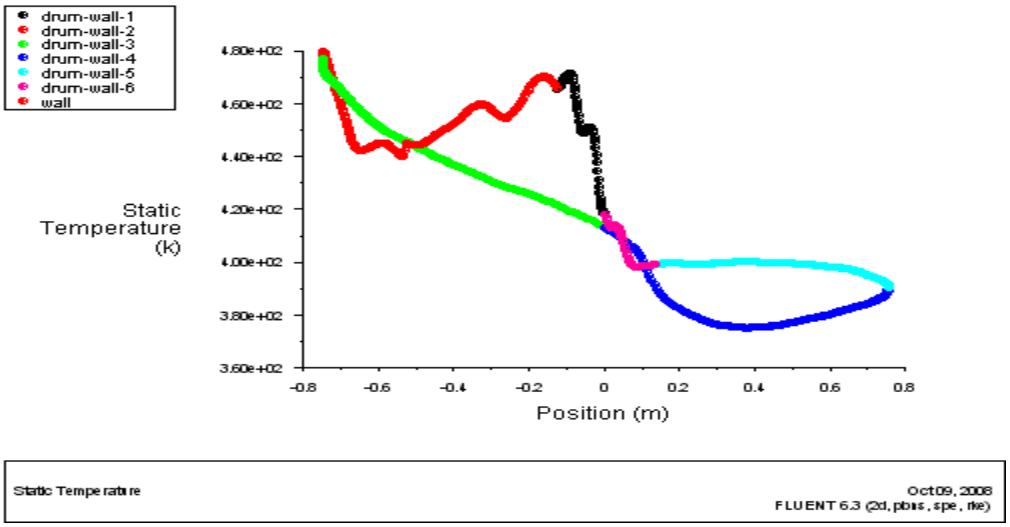
drum-wall-1
drum-wall-2
drum-wall-3
drum-wall-4
drum-wall-5
drum-wall-6
wall
Static Temperature (k)
4.80e+02
4.60e+02
4.40e+02
4.20e+02
4.00e+02
3.80e+02
3.60e+02
-0.8
-0.6
-0.4
-0.2
0
0.2
0.4
0.6
0.8
Position (m)
Static Temperature
Oct 09, 2008
FLUENT 6.3 (2d, pbns, spe, rke)

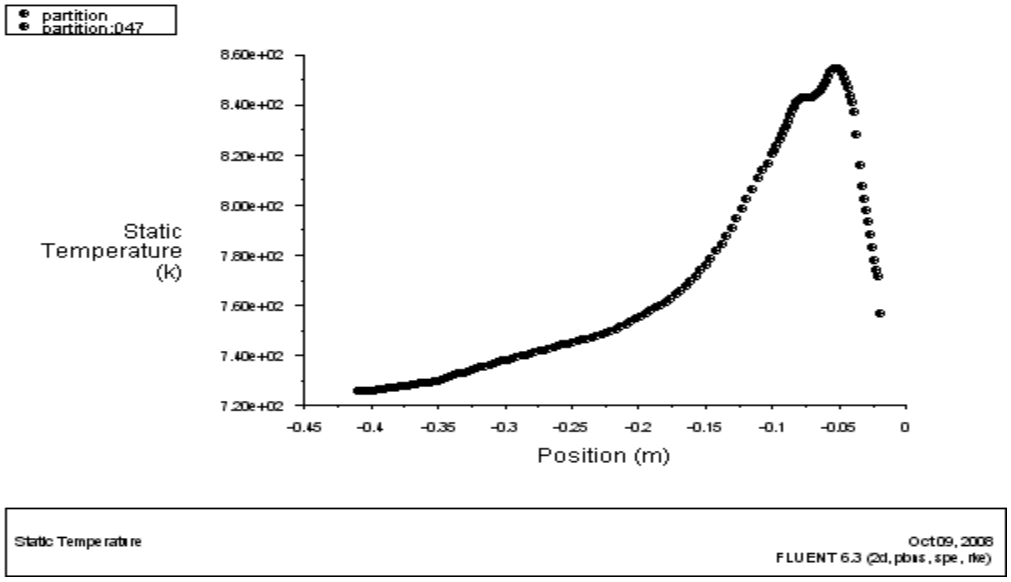

1 MMBtu/hr

Distance between burner and drum is 2 3/4".

Partition - 45 degree

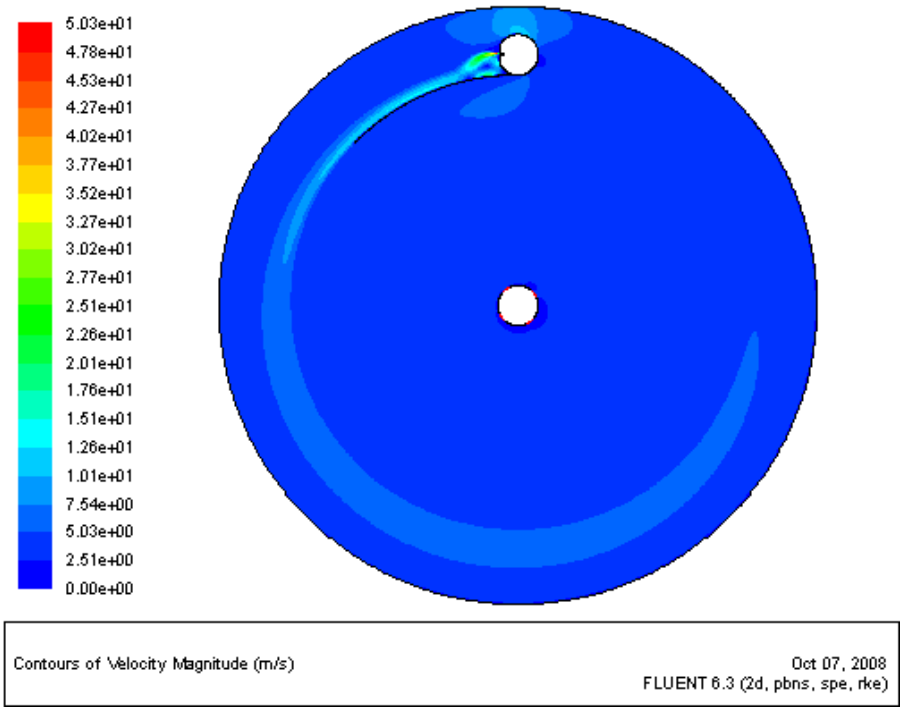

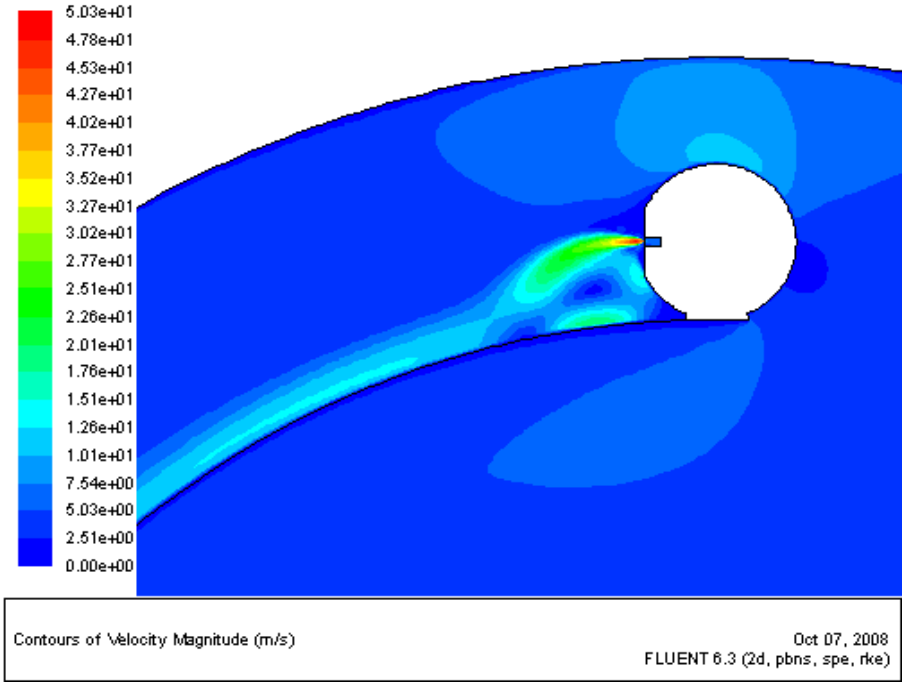
5.03e+01
4.78e+01
4.53e+01
4.27e+01
4.02e+01
3.77e+01
3.52e+01
3.27e+01
3.02e+01
2.77e+01
2.51e+01
2.26e+01
2.01e+01
1.76e+01
1.51e+01
1.26e+01
1.01e+01
7.54e+00
5.03e+00
2.51e+00
0.00e+00
Contours of Velocity Magnitude (m/s)
Oct 07, 2008
FLUENT 6.3 (2d, pbns, spe, rke)

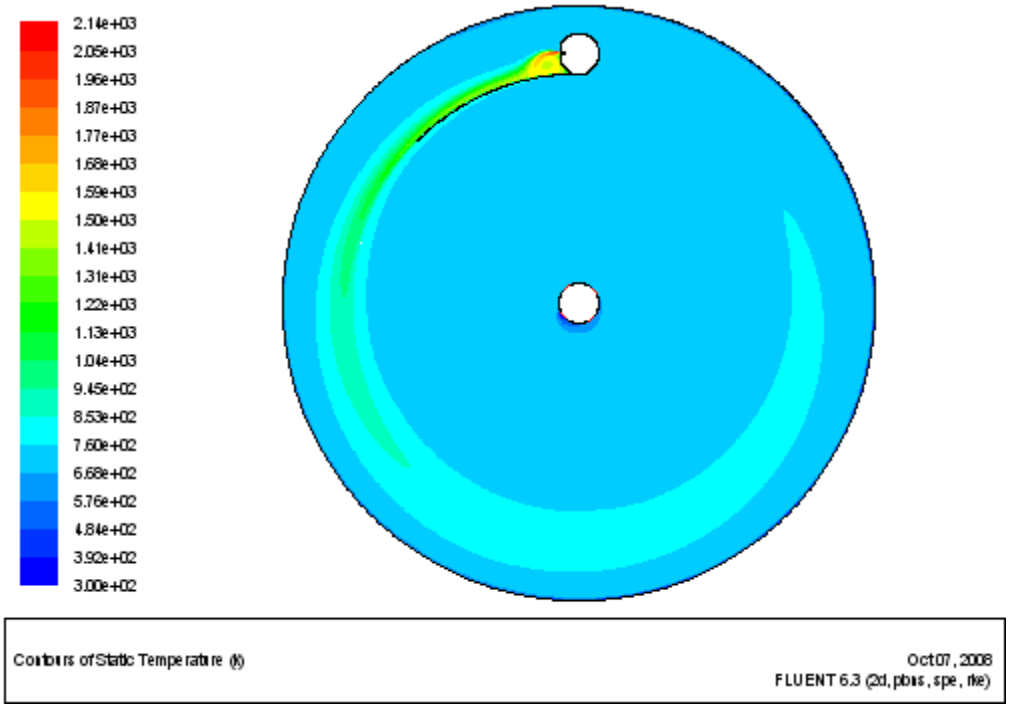
2.14e+03
2.05e+03
1.96e+03
1.87e+03
1.77e+03
1.68e+03
1.59e+03
1.50e+03
1.41e+03
1.31e+03
1.22e+03
1.13e+03
1.04e+03
9.45e+02
8.53e+02
7.60e+02
6.68e+02
5.76e+02
4.84e+02
3.92e+02
3.00e+02
Contours of Static Temperature (k)
Oct 07, 2008
FLUENT 6.3 (2d, pbns, spe, rke)

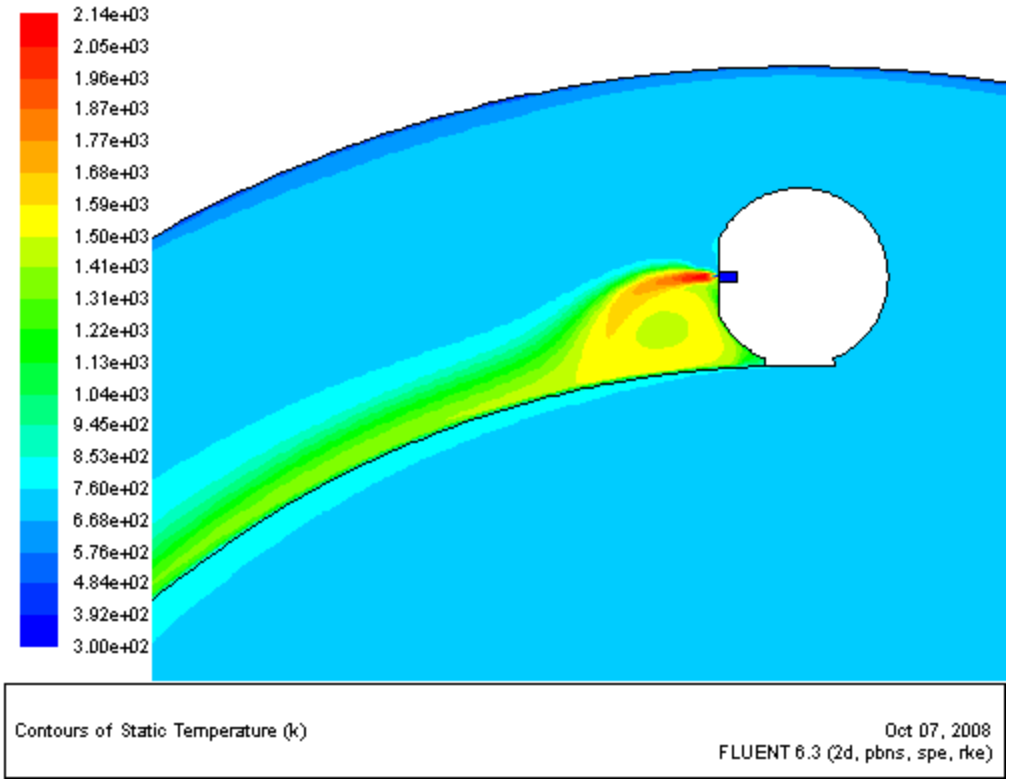
2.14e+03
2.05e+03
1.96e+03
1.87e+03
1.77e+03
1.68e+03
1.59e+03
1.50e+03
1.41e+03
1.31e+03
1.22e+03
1.13e+03
1.04e+03
9.45e+02
8.53e+02
7.60e+02
6.68e+02
5.76e+02
4.84e+02
3.92e+02
3.00e+02
Contours of Static Temperature (k)
Oct 07, 2008
FLUENT 6.3 (2d, pbns, spe, rke)

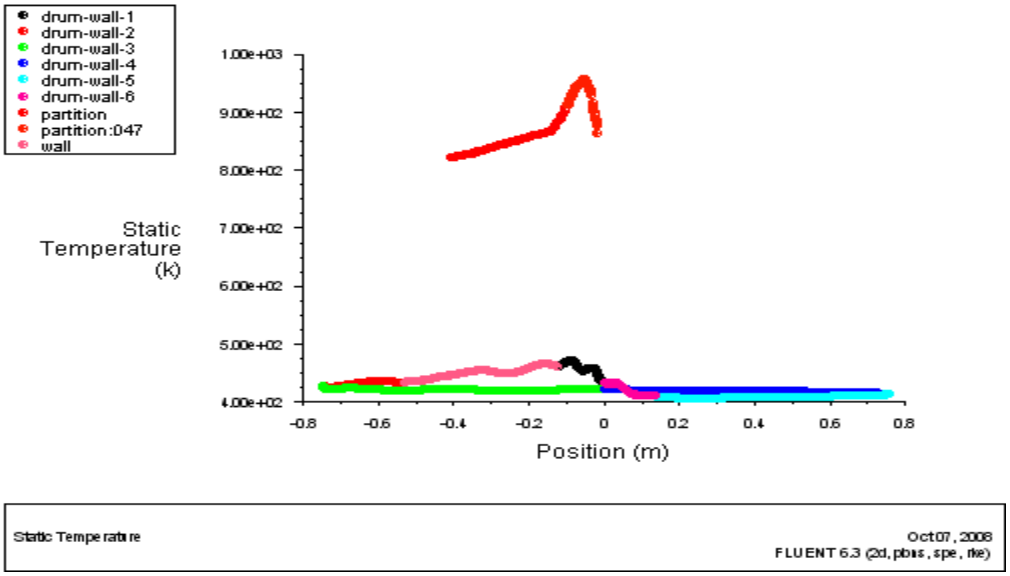
drum-wall-1
drum-wall-2
drum-wall-3
drum-wall-4
drum-wall-5
drum-wall-6
partition
partition:047
wall
Static Temperature (k)
1.00e+03
9.00e+02
8.00e+02
7.00e+02
6.00e+02
5.00e+02
4.00e+02
-0.8
-0.6
-0.4
-0.2
0
0.2
0.4
0.6
0.8
Position (m)
Static Temperature
Oct 07, 2008
FLUENT 6.3 (2d, pbns, spe, rke)

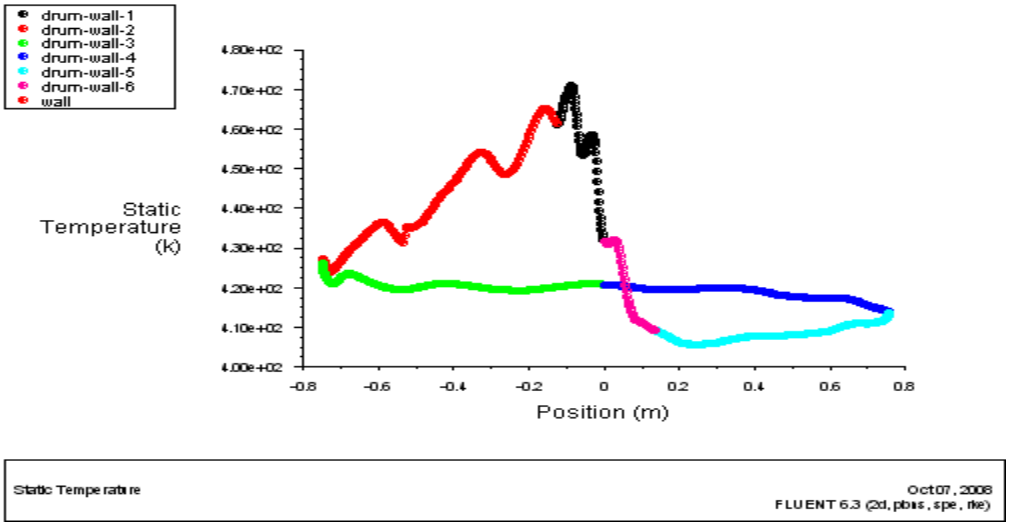

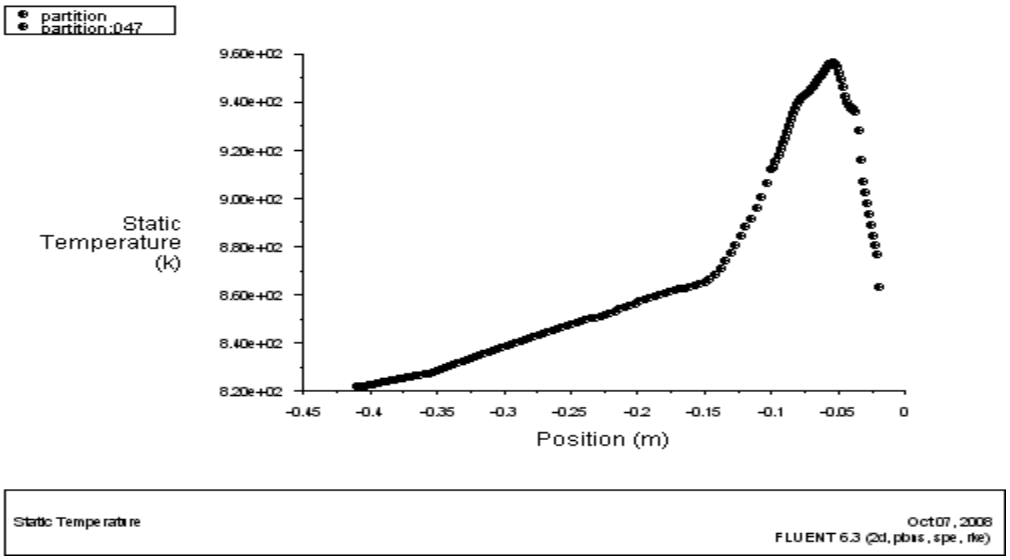

1 MMBtu/hr Distance between burner and drum is 2 3/4". Partition - 90 degree

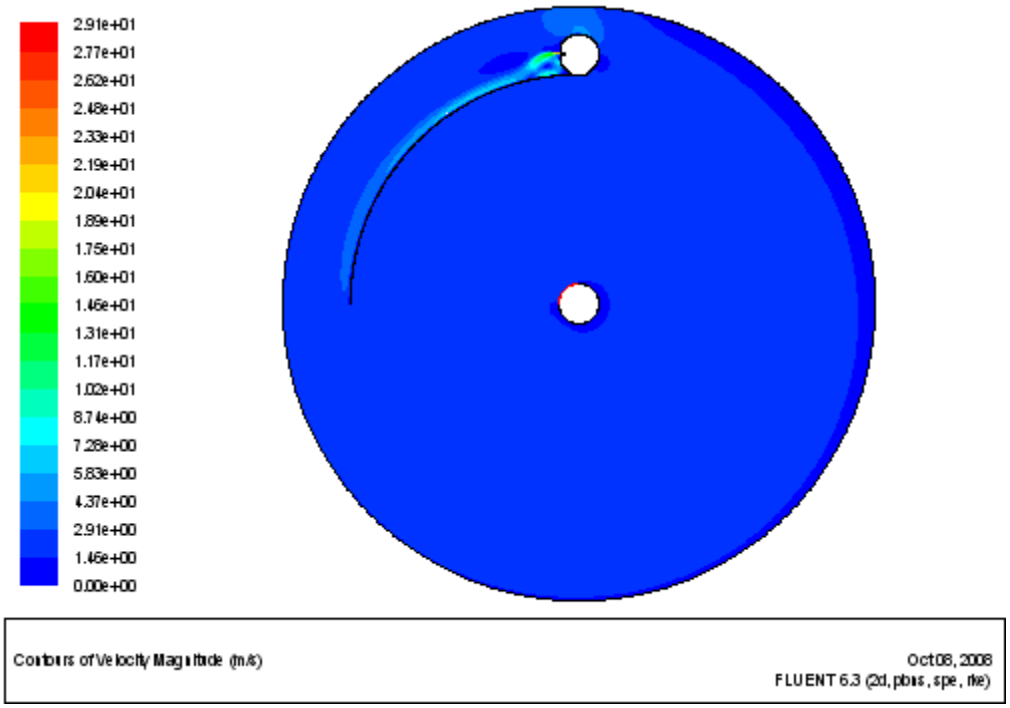
2.91e+01
2.77e+01
2.62e+01
2.48e+01
2.33e+01
2.19e+01
2.04e+01
1.89e+01
1.75e+01
1.60e+01
1.46e+01
1.31e+01
1.17e+01
1.02e+01
8.74e+00
7.28e+00
5.83e+00
4.37e+00
2.91e+00
1.46e+00
0.00e+00
Contours of Velocity Magnitude (m/s)
Oct 08, 2008
FLUENT 6.3 (2d, pbns, spe, rke)

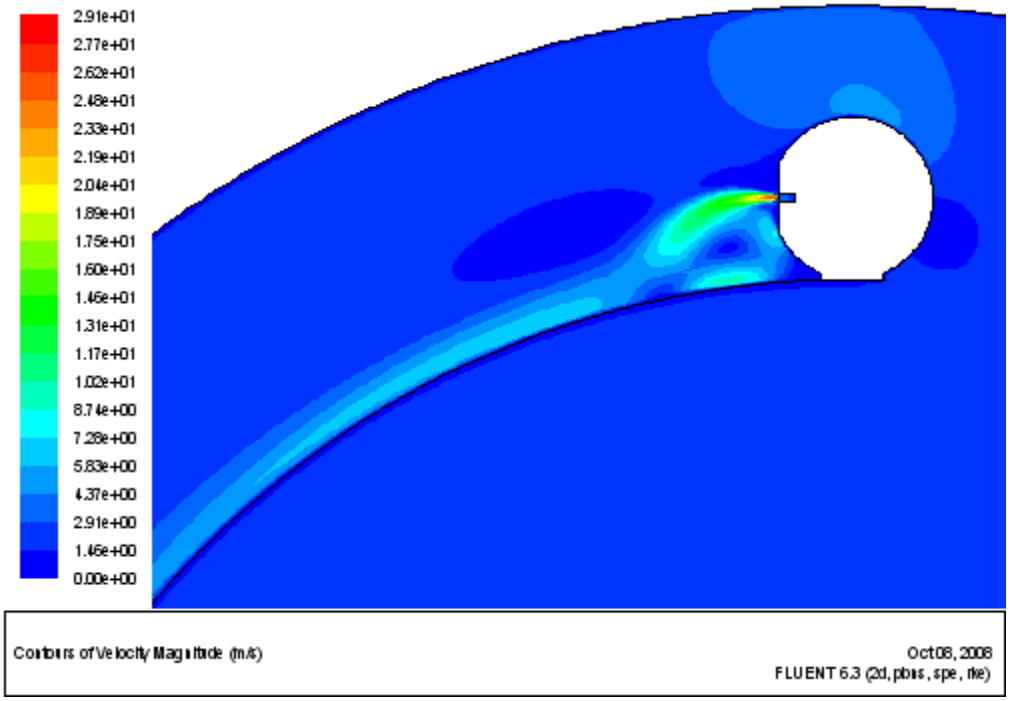
2.91e+01
2.77e+01
2.62e+01
2.48e+01
2.33e+01
2.19e+01
2.04e+01
1.89e+01
1.75e+01
1.60e+01
1.46e+01
1.31e+01
1.17e+01
1.02e+01
8.74e+00
7.28e+00
5.83e+00
4.37e+00
2.91e+00
1.46e+00
0.00e+00
Contours of Velocity Magnitude (m/s)
Oct 08, 2008
FLUENT 6.3 (2d, pbns, spe, rke)

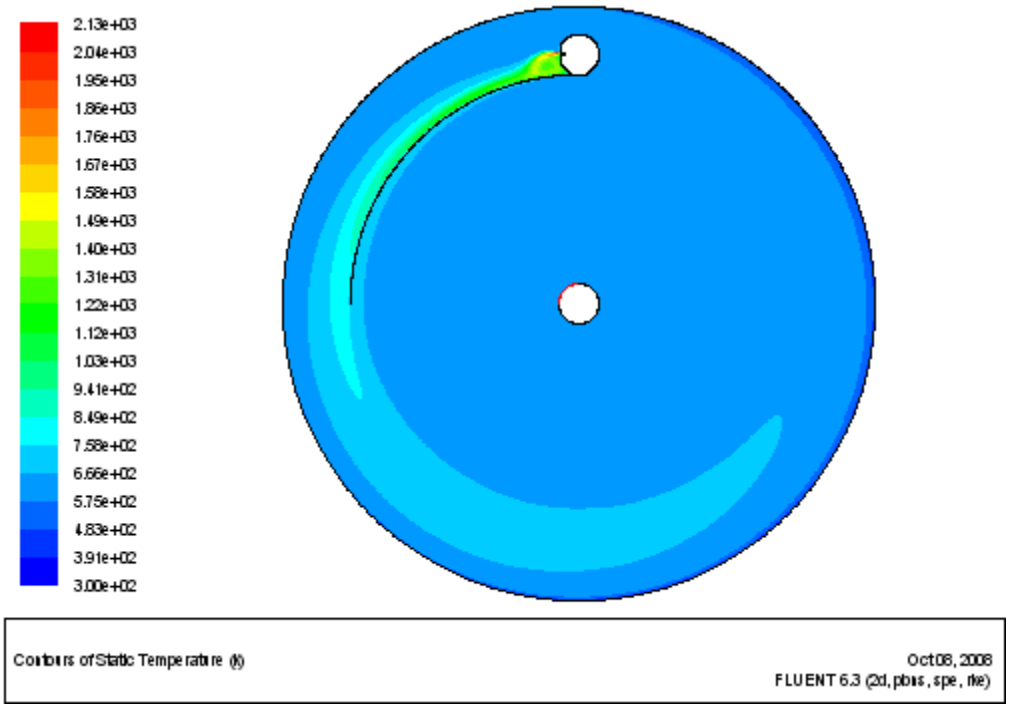
2.13e+03
2.04e+03
1.95e+03
1.86e+03
1.76e+03
1.67e+03
1.58e+03
1.49e+03
1.40e+03
1.31e+03
1.22e+03
1.12e+03
1.03e+03
9.41e+02
8.49e+02
7.58e+02
6.66e+02
5.75e+02
4.83e+02
3.91e+02
3.00e+02
Contours of Static Temperature (k)
Oct 08, 2008
FLUENT 6.3 (2d, pbns, spe, rke)

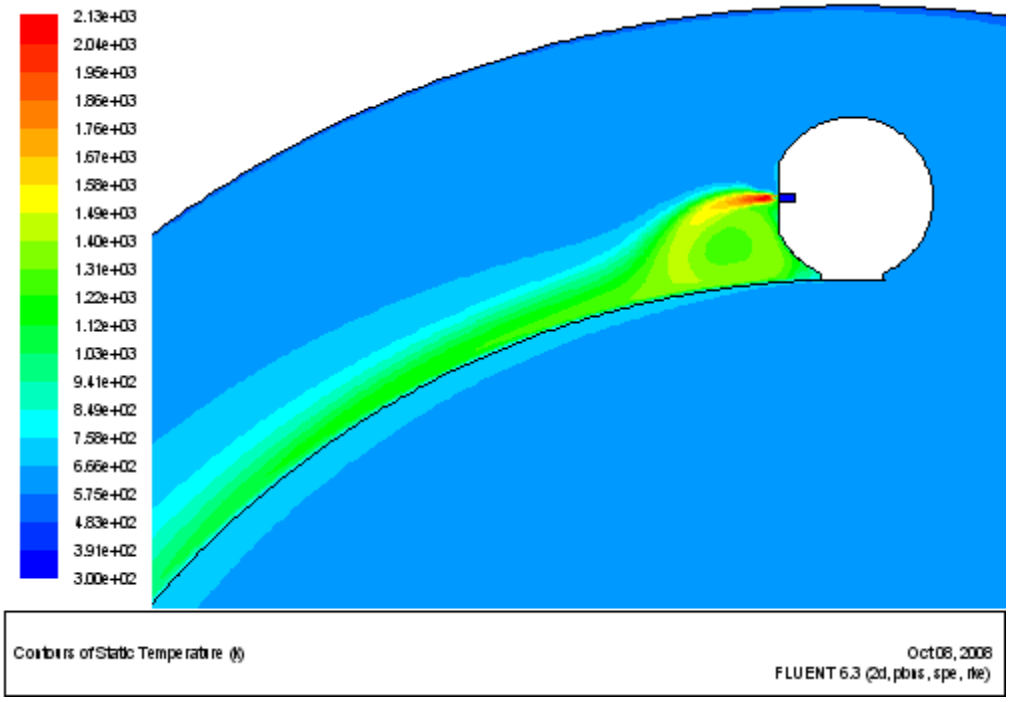
2.13e+03
2.04e+03
1.95e+03
1.86e+03
1.76e+03
1.67e+03
1.58e+03
1.49e+03
1.40e+03
1.31e+03
1.22e+03
1.12e+03
1.03e+03
9.41e+02
8.49e+02
7.58e+02
6.66e+02
5.75e+02
4.83e+02
3.91e+02
3.00e+02
Contours of Static Temperature (k)
Oct 08, 2008
FLUENT 6.3 (2d, pbns, spe, rke)

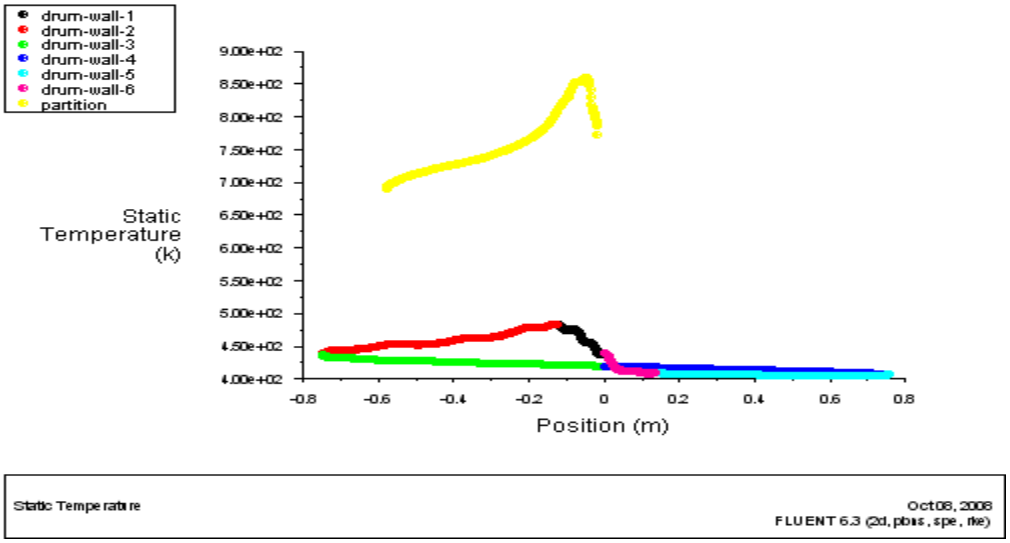
drum-wall-1
drum-wall-2
drum-wall-3
drum-wall-4
drum-wall-5
drum-wall-6
partition
Static Temperature (k)
9.00e+02
8.50e+02
8.00e+02
7.50e+02
7.00e+02
6.50e+02
6.00e+02
5.50e+02
5.00e+02
4.50e+02
4.00e+02
-0.8
-0.6
-0.4
-0.2
0
0.2
0.4
0.6
0.8
Position (m)
Static Temperature
Oct 08, 2008
FLUENT 6.3 (2d, pbns, spe, rke)

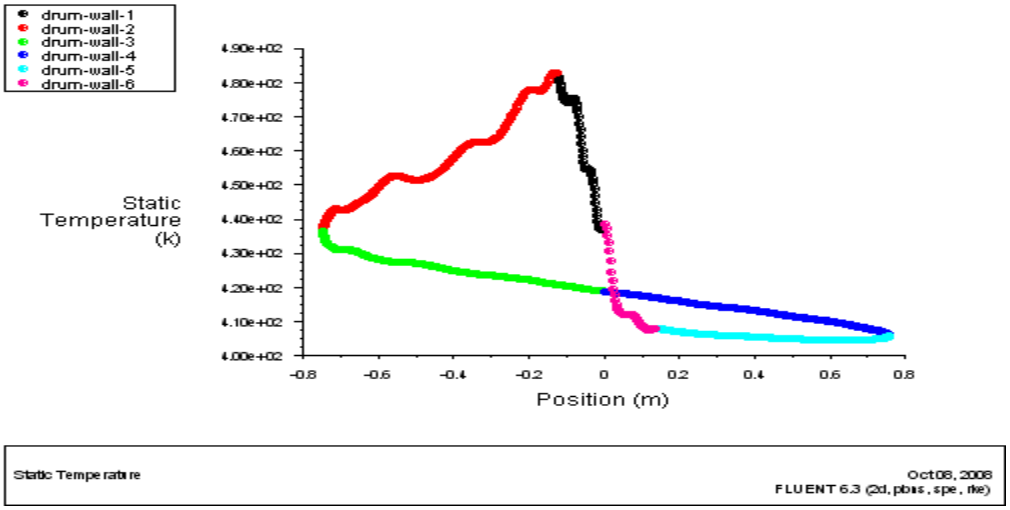
drum-wall-1
drum-wall-2
drum-wall-3
drum-wall-4
drum-wall-5
drum-wall-6
Static Temperature (k)
4.90e+02
4.80e+02
4.70e+02
4.60e+02
4.50e+02
4.40e+02
4.30e+02
4.20e+02
4.10e+02
4.00e+02
-0.8
-0.6
-0.4
-0.2
0
0.2
0.4
0.6
0.8
Position (m)
Static Temperature
Oct 08, 2008
FLUENT 6.3 (2d, pbns, spe, rke)

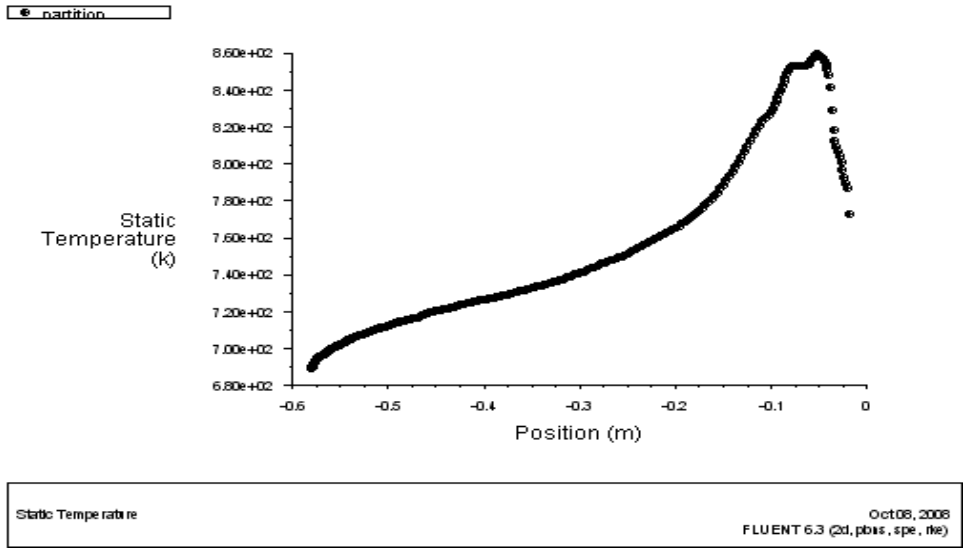
partition
Static Temperature (k)
8.60e+02
8.40e+02
8.20e+02
8.00e+02
7.80e+02
7.60e+02
7.40e+02
7.20e+02
7.00e+02
6.80e+02
-0.6
-0.5
-0.4
-0.3
-0.2
-0.1
0
Position (m)
Static Temperature
Oct 08, 2008
FLUENT 6.3 (2d, pbns, spe, rke)

Appendix B: Design Drawings, Sketches, Piping and Instrumentation Diagrams

JOB #	DATE	NEXT ASSEMBLY	GROUP
HU00013061	11-3-08	M4425-001-40-001EHU	A

NOTES:

1- ALIGN DOCTOR BEARINGS USING PROVIDED ADJUSTMENT SCREWS AND SHIMS AS NECESSARY FOR DOCTOR BLADE TO CONTACT DRUM SURFACE AT 24° AS SHOWN.

2- TO LOCATE LEVER ARMS, ROTATE DOCTOR SHAFTS TO ALIGN LEVER ARMS VERTICALLY AS SHOWN IN DETAIL "A". ROTATE DOCTOR BLADE 10° TOWARDS DRUM SURFACE AND SECURE IN PLACE USING (4)SET SCREWS SUPPLIED IN EACH SHAFT HUB. APPLY CIRCUMFERENTIAL WELD AS SHOWN IN DETAIL "A" USING E309L STAINLESS STEEL ELECTRODE TO SECURE PERMANENTLY.

Parts List

ITEM	QTY	Description (English)	LENGTH	IDENT. NO.	MATERIAL	NOTES
1	1	BLADE HOLDER ASS'Y, DOCTOR	–	D4065-00190DGA	–	SEE NOTE 1
2	2	LEVER ARM, 3.00" SHAFT, 11.00" ARM	–	D4065-00191BGA	STL	SEE NOTE 2
3	1	PIVOT BRACKET	–	D4065-00192CGA	STL	–
4	1	PIVOT BRACKET	–	D4065-00192CGB	STL	–
5	2	PILLOW BLOCK, DODGE SOLIDLUBE #033077LT, 3.0 SHAFT DIA	–	237317-3000	–	–
6	2	COLLAR, SHAFT-(2)PIECE- MCMASTER #3370K62, 3.0 BORE, 4.25 OD, 0.88 WD, CHROME-PLATED	–	237494-3009	CR PL STL	–
7	2	CYLINDER, AIR, 6.00 BORE X 5.00 STROKE (ORTMAN AS-G-6.00-5.00-NC-1.38-1)	–	274671-3000	–	–
8	2	CLEVIS, ROD, FEMALE (ORTMAN #82264)	–	274882-3034	–	–
9	2	PIN, CLEVIS (ORTMAN# 8658-3)	–	274883-3021	–	–
10	2	KEYSTOCK, .63 X .63	1.00	12040000	STL	–
11	2	SHIMPACK, BEARING HOUSING, DOCTOR	–	D4065-00193BGA	SST	–
12	4	SCREW, ZN PL, GR5, HEX HD CAP, IMP RH, 0.875-9 X 3.000	–	02050471	ZN PL GR5	–
13	4	WASHER, ZN PL, FLAT REG, IMP, 0.875, 1.750 OD, 0.134 TH	–	04020049	ZN PL	–
14	8	SCREW, ZN PL, GR5, HEX HD CAP, IMP RH, 0.625-11 X 2.000	–	02050376	ZN PL GR5	–

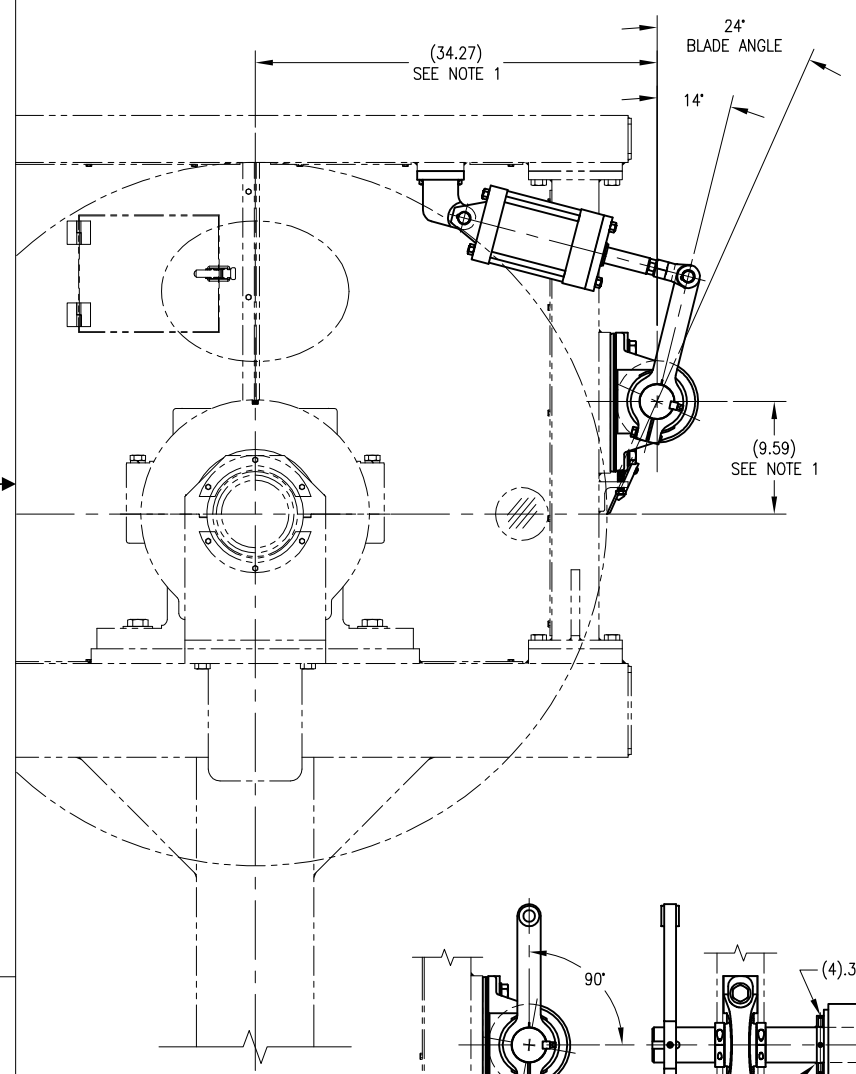

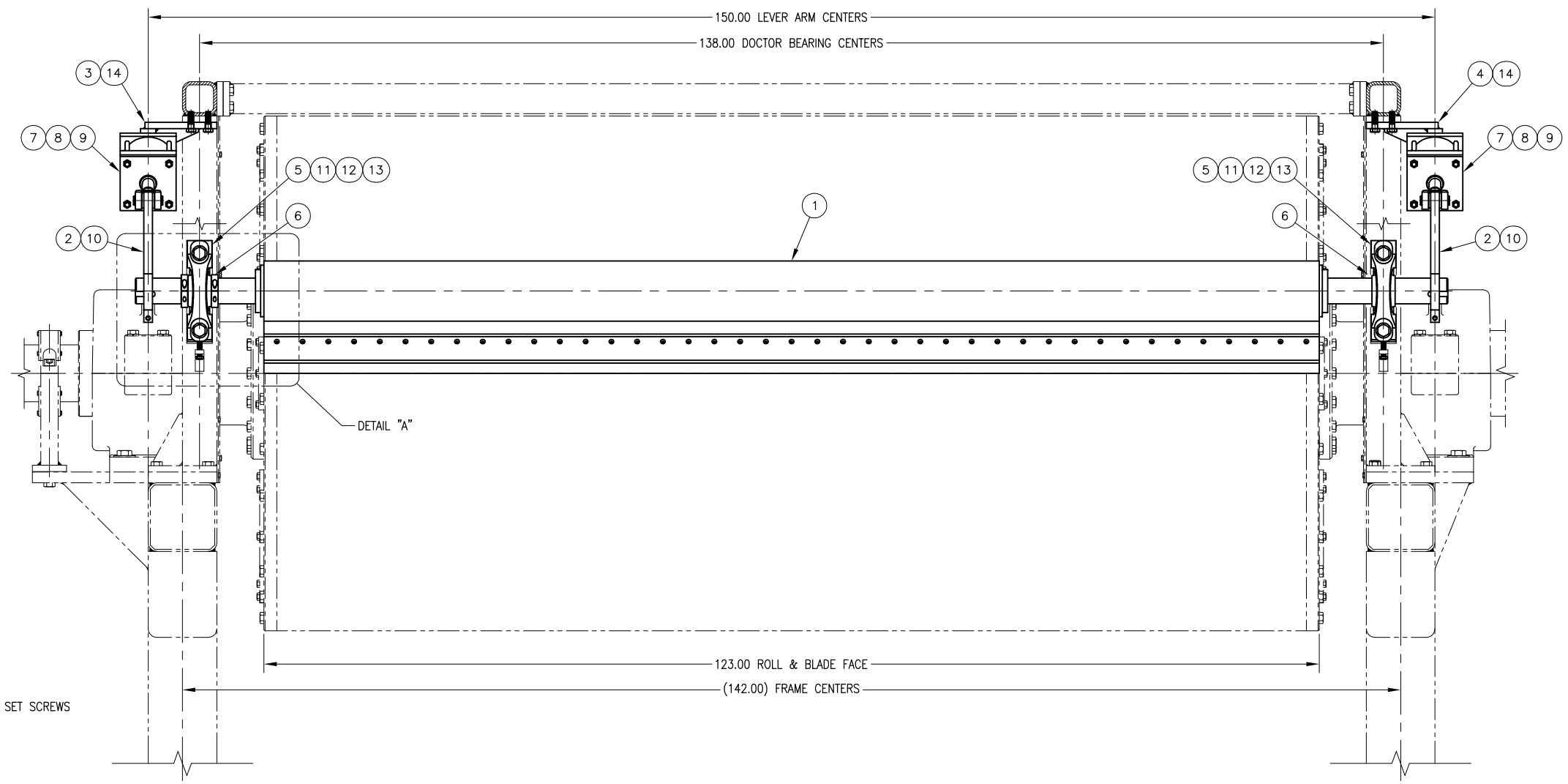

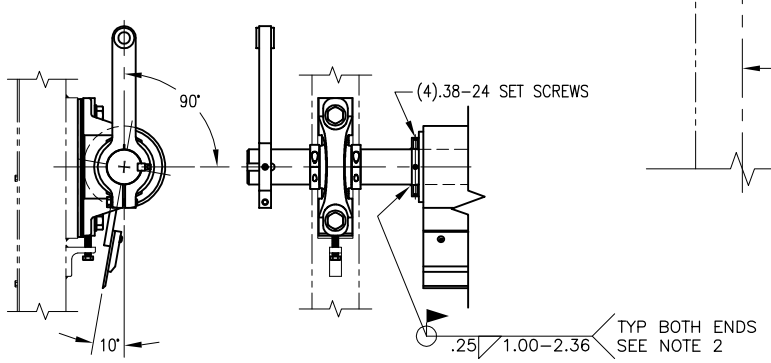

DETAIL 'A"
TYP BOTH ENDS

THIS DRAWING, PROPERTY OF: GL&V Inc. MAY NOT BE COPIED OR DISTRIBUTED WITHOUT AUTHORIZATION.

DATE	NAME	APPR.	INIT.	REVISION	ECO	ZONE	NO. REV.

DRAWN	CHECKED	WEIGHT	UNITS
TJL	TME	N/A	☒ INCHES ☐ METRIC
DATE 11-3-08	DATE 11-4-08	INIT.	DRPR DATE

SIMILAR TO | SUPERSEDES

GL&V Paper Group inc.

TITLE DOCTOR, ASS'Y, GAS FIRED FOOD DRYER

CATEGORY	SCALE	MACH. NO.	PAGE
DRYER	1:8		1 OF 1

JOB NUMBER HU00013061 | DWG NO. A4065-00-0049D | 0

D-(22x34)

52

NOMINAL DIAMETER (INCHES)	THREADS PER INCH	UNLUBRICATED TORQUE SAE 2 (ft–lbs)	UNLUBRICATED TORQUE SAE 5 (ft–lbs)	UNLUBRICATED TORQUE SAE 8 (ft–lbs)	PLATED TORQUE SAE 2 (ft–lbs)	PLATED TORQUE SAE 5 (ft–lbs)	PLATED TORQUE SAE 8 (ft–lbs)	LUBRICATED TORQUE SAE 2 (ft–lbs)	LUBRICATED TORQUE SAE 5 (ft–lbs)	LUBRICATED TORQUE SAE 8 (ft–lbs)
0.25	20	5	8	12	4	6	9	4	6	8
0.3125	18	11	17	25	8	13	18	8	12	17
0.375	16	20	31	44	15	23	33	14	22	31
0.4375	14	32	49	70	24	37	52	22	35	49
0.5	13	20	75	106	37	57	80	34	53	74
0.5625	12	20	109	154	53	82	115	49	76	107
0.625	11	20	150	212	73	113	159	68	105	148
0.75	10	20	266	376	129	200	282	121	186	263
0.875	9	20	430	606	125	322	455	117	301	424
1	8	20	644	909	187	483	682	175	451	636
1.125	7	20	794	1288	266	595	966	248	556	901
1.25	7	20	1120	1817	375	840	1363	350	784	1272
1.375	6	20	1469	2382	491	1102	1787	459	1028	1668
1.5	6	20	1949	3161	652	1462	2371	609	1365	2213

NOTES:

1. REFER TO FRAMEWORK ELEVATION (ITEM #1) FOR ASSEMBLY OF ALL DRYER FRAMEWORK. REFER TO BOLT TORQUE CHART FOR SPECIFIED TORQUE REQUIREMENTS.
2. ALL FRAMWORK SECURED TO GROUND LEVEL TO BE EITHER GROUTED TO FLOOR, SECURED TO SOLE PLATES, OR SECURED TO FRAME SPACERS (HARDWARE AND METHOD OF ATTACHMENT BY CUSTOMER).
3. SECURE DRYER & BEARING HOUSING ASSEMBLY (ITEM #2) USING (8)1.25–7 HHC SCREWS (ITEM #8) AND (8)ø1.25 FLAT WASHERS (ITEM #9). ALIGN USING SHIMS (ITEM #7) AS NECCESSARY.
4. FOR INSTALLATION OF DRYER DOCTOR, REFER TO DOCTOR ASS'Y DRAWING (ITEM #3). FOR PIPING TO DOCTOR, PLEASE REFER TO DOCTOR PIPING DIAGRAM (ITEM #15).
5. FOR INSTALLATION OF VIBRATORY SYSTEM (NOT SHOWN ON DRAWING FOR CLARITY), REFER TO VIBRATORY FEED PLATE ASSEMBLY (ITEM #4). HARDWARE AND METHOD OF ATTACHMENT BY CUSTOMER.
6. FOR INSTALLATION OF ALL DRIVE COMPONENTS, REFER TO DRIVE SYSTEM ASSEMBLY (ITEM #5). HARDWARE AND METHOD OF ATTACHMENT BY CUSTOMER.
7. PIPING FROM FLYNN COMBUSTION CABINET TO DRYER SHOWN ON SUPPLIED FLYNN BURNER CO. DRAWINGS (ITEM #20).
8. SAVE ALL PAN (ITEM #6) TO BE SECURED TO FLOOR OR SPACER EXTENSIONS AND LOCATED AS SHOWN. MOUNTING HARDWARE AND METHOD OF ATTACHMENT BY CUSTOMER.
9. AT FINAL MILL INSTALLATION, CUSTOMER TO DRILL & TAP (6).38–11 THRU HOLES AS SHOWN IN ORDER TO MOUNT ALL PROXIMITY SENSORS (ITEM #10). LOCATIONS OF PROXIMITY SENSOR TO BE DETERMINED AT INSTALLATION. SECURE PROXIMITY SENSORS USING (2).38–11 HHC SCREWS (ITEM #13) AND (2)ø.38 FLAT WASHERS (ITEM #14) AND ASSOCIATED BRACKETS (ITEMS 11 & 12).
10. ALL SAFETY GUARDING TO BE SUPPLIED AND INSTALLED BY CUSTOMER.

Parts List

ITEM	QTY	Description (English)	IDENT. NO.	MATERIAL	NOTES
1	1	FRAMING ELEVATION, GAS FIRED FOOD DRYER	A4010–00–0011D	–	
2	1	DRYER & BRG HSG ASSY, GAS FIRED FOOD DRYER	A4032–00–0118D	–	
3	1	DOCTOR, ASS'Y, GAS FIRED FOOD DRYER	A4065–00–0049D	–	
4	1	VIBRATORY FEED PLATE ASSY, GFFD	A4096–00–0016D	–	NOT SHOWN FOR CLARITY
5	1	DRIVE SYSTEM ASSY, GAS FIRED FOOD DRYER	A4005–00–0011D	–	
6	1	SAVE–ALL PAN, GAS FIRED FOOD DRYER	D4096–00062D	SST	
7	2	SHIMPACK, BEARING HOUSING, GFFD	D4010–00287B	–	
8	8	SCREW, ZN PL, GR5, HEX HD CAP, IMP RH, 1.250–7 X 4.000	888115–770	ZN PL GR5	
9	8	WASHER, STEEL, FLAT REG, IMP, 1.250, 3.000 OD, 0.160 TH	04020024	–	
10	3	ALLEN BRADLEY 18mm PROXIMITY SENSOR	A–B 871TMN20NP18D4		
11	2	BRACKET, PROXIMITY SENSOR, DOCTOR	D4096–00070B	STL	
12	1	BRACKET, PROXIMITY SENSOR, DRIVE	D4096–00071C	STL	
13	6	SCREW, STEEL, GR5, HEX HD CAP, IMP RH, 0.375–16 X 1.000	02050034	–	
14	6	WASHER, STEEL, FLAT REG, IMP, 0.375, 1.000 OD, 0.104 TH	04020005	–	
15	1	DOCTOR PIPING DIAGRAM	D4065–00194B	–	
16	2	NAMEPLATE, SAFETY, HOT SURFACES,, 6.00 X 8.00	000A27641		
17	2	NAMEPLATE, SAFETY, NIP POINTS, 6.00 X 8.00	000A27638		
18	2	NAMEPLATE, SAFETY, ENTANGLEMENT, 6.00 X 8.00,	000A27775		

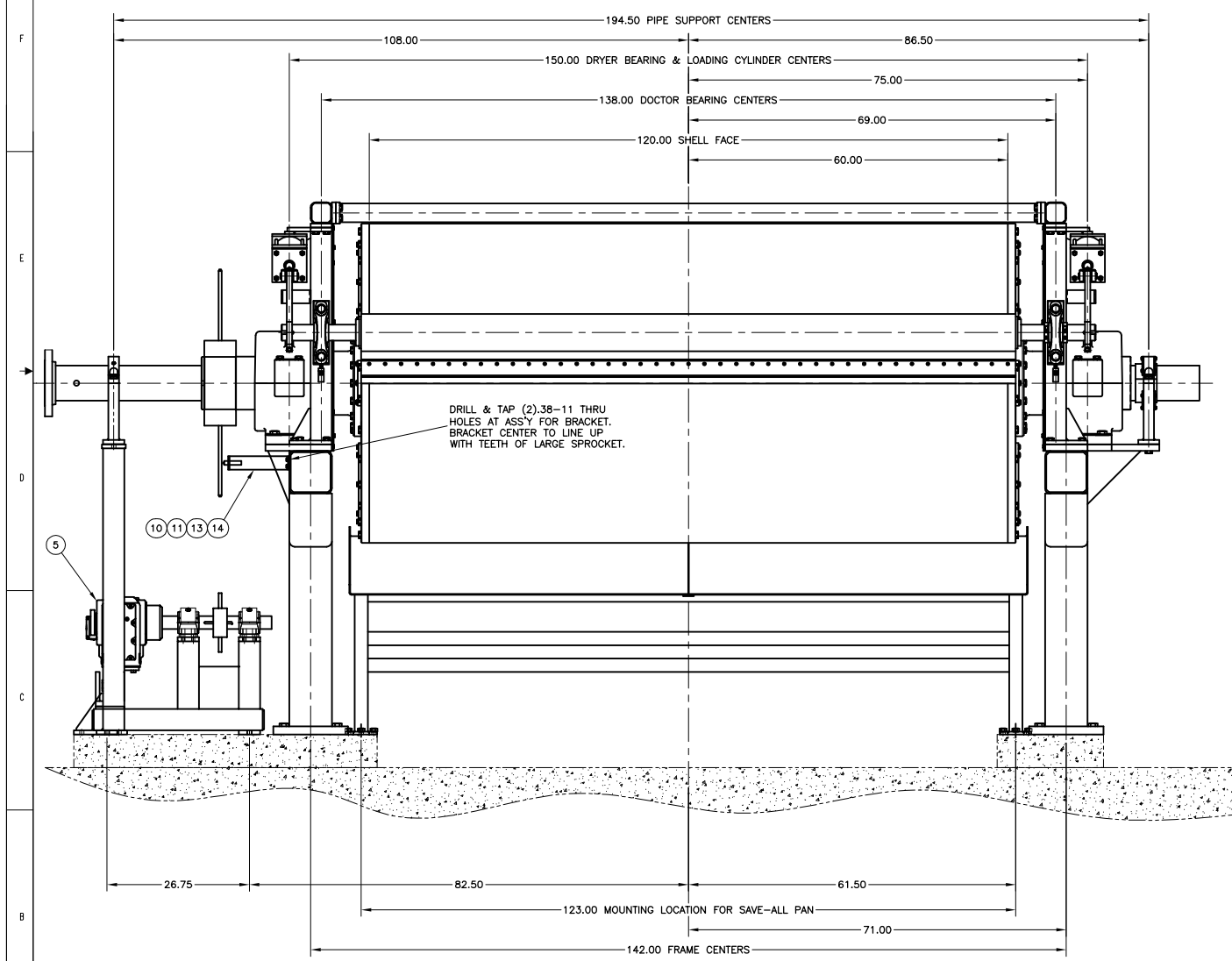

CROSS MACHINE ELEVATION

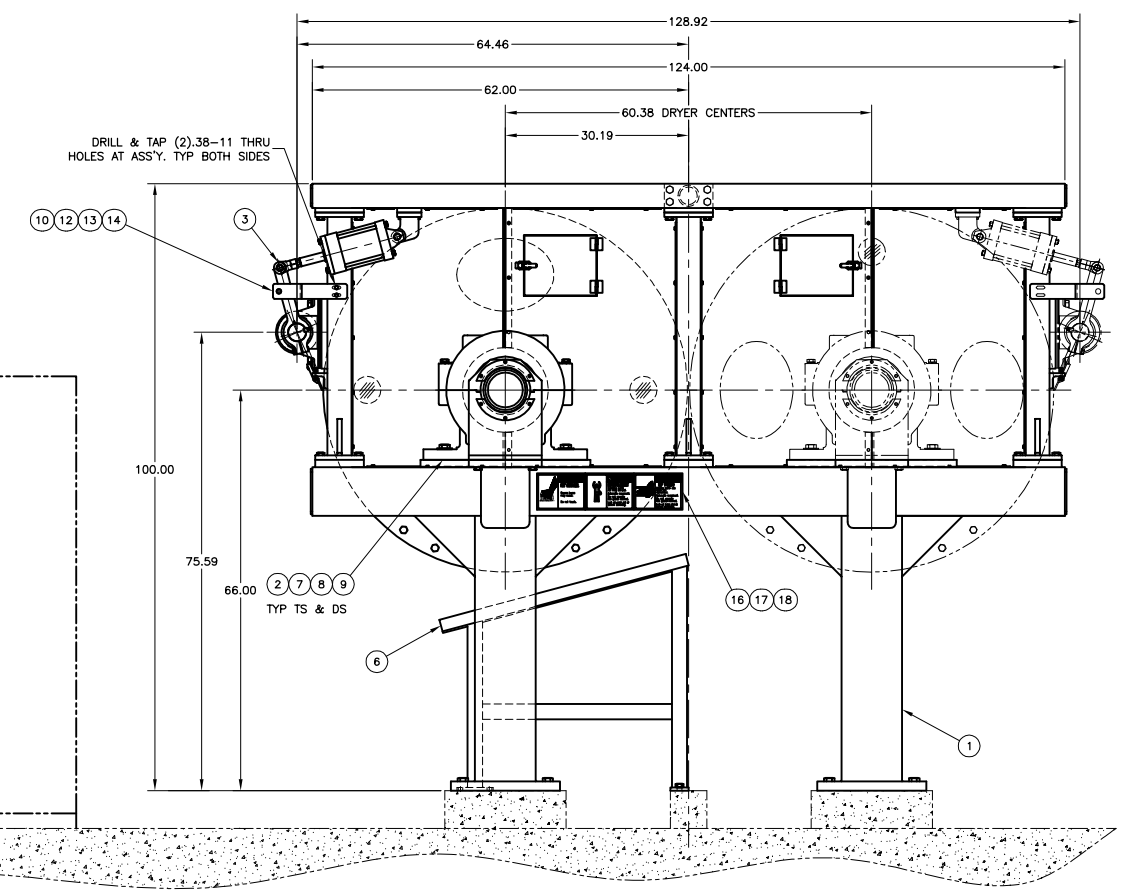

TENDING SIDE ELEVATION
(ITEM 4 NOT SHOWN FOR CLARITY)

GLV Paper Group inc.

CLIENT: GAS TECHNOLOGY INSTITUTE GILROY, CA

TITLE: GAS FIRED FOOD DRYER MAIN ELEVATION

THIS DRAWING, PROPERTY OF: GLV Inc. MAY NOT BE COPIED OR DISTRIBUTED WITHOUT AUTHORIZATION.

DRAWN	CHECKED	WEIGHT	UNITS
TME	ECS	N/A	☒ INCHES ☐ METRIC
DATE 1/6/09	DATE 1/13/09	INT.	DRFR DATE
SIMILAR TO		SUPERSEDES	

CATEGORY	SCALE	MACH. NO.	PAGE
DRYER	1:10	#1	1 OF 1

JOB NUMBER HU00013061 — DWG NO. M4425–001–40–001EHU — 0

DATE	NAME	APPR.	INT.	REVISION	ECO	ZONE	NO. REV.

E–(34x44)

53

53

JOB #	DATE	NEXT ASSEMBLY	GROUP
HU00013061	10/28/08	M4425-001-40-001EHU	A

Parts List

ITEM	QTY	Description (English)	IDENT. NO.	MATERIAL	ITEM	QTY	Description (English)	IDENT. NO.	MATERIAL
9	2	ACCESS PANEL, GAS FIRED FOOD DRYER	D4010-00284DGB	SST	1	1	FRAME, BASE, GFFD, TS	D4010-00278DGA	STL
10	1	FRAME, HOLDER SUPPORT, GFFD	D4010-00285CGA	STL	2	1	FRAME, BASE, GFFD, DS	D4010-00279DGA	STL
11	1	HOLDER, HOUSING, PIPE SUPPORT, ASS'Y, TS	A4096-00-0014CGA	STL	3	2	FRAME, END SUPPORT, GFFD	D4010-00280CGA	STL
12	1	HOLDER, HOUSING, PIPE SUPPORT, DS	D4096-00058CGA	STL	4	2	FRAME, END SUPPORT, GFFD	D4010-00280CGB	STL
13	2	SHIMPACK, HOLDER, PIPE SUPPORT	D4010-00286B	–	5	2	FRAME, CENTER SUPPORT, GFFD	D4010-00281CGA	STL
14	58	SCREW, ZN PL, GR5, HEX HD CAP, IMP RH, 0.750-10 X 2.000	02050250	ZN PL GR5 STL	6	2	FRAME, TOP BEAM, GFFD	D4010-00282DGA	STL
15	2	SCREW, ZN PL, GR5, HEX HD CAP, IMP RH, 0.750-10 X 2.500	02050223	ZN PL GR5 STL	7	1	FRAME, CROSS SUPPORT, GFFD	D4010-00283CGA	STL
16	104	SCREW, ZN PL, GR5, HEX HD CAP, IMP RH, 0.250-20 X 0.500	02050269	ZN PL GR5 STL	8	2	ACCESS PANEL, GAS FIRED FOOD DRYER	D4010-00284DGA	SST

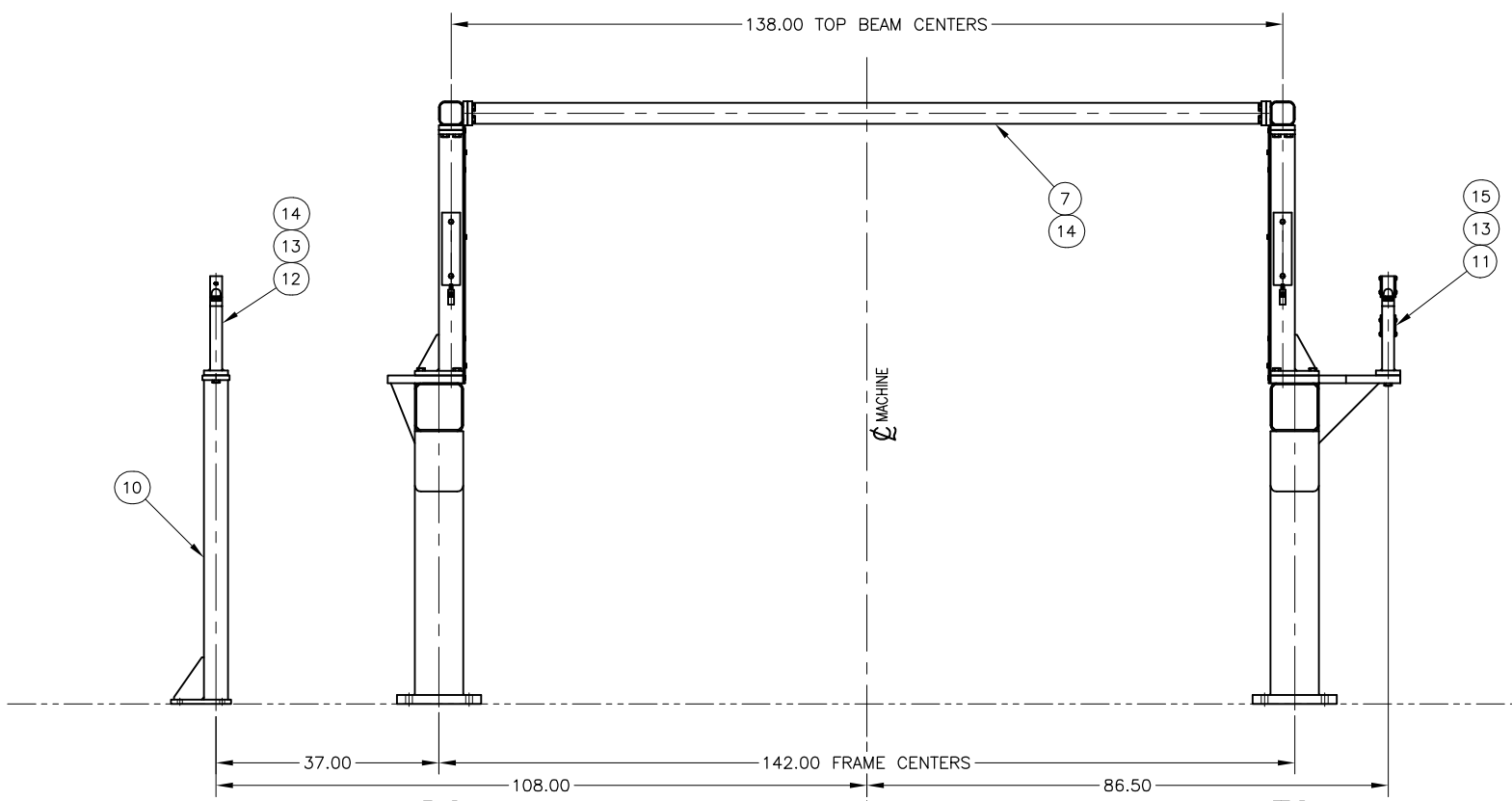

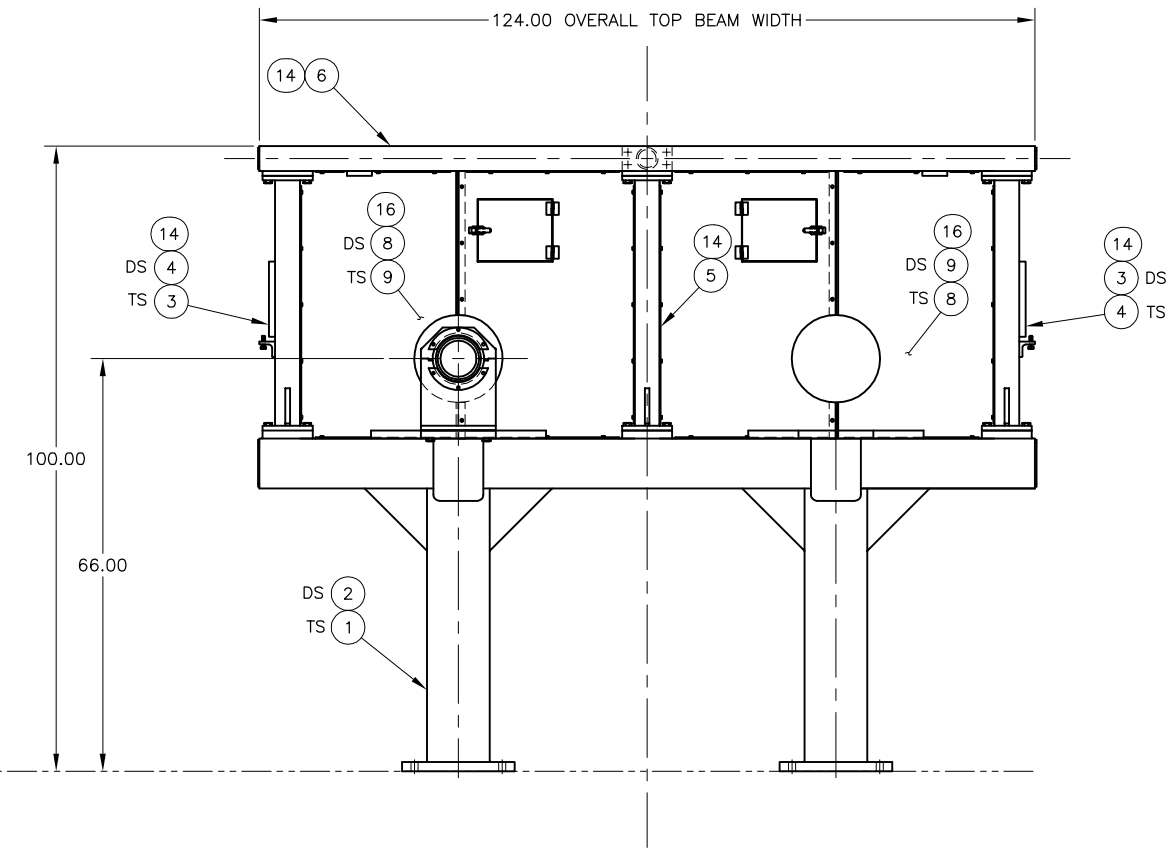

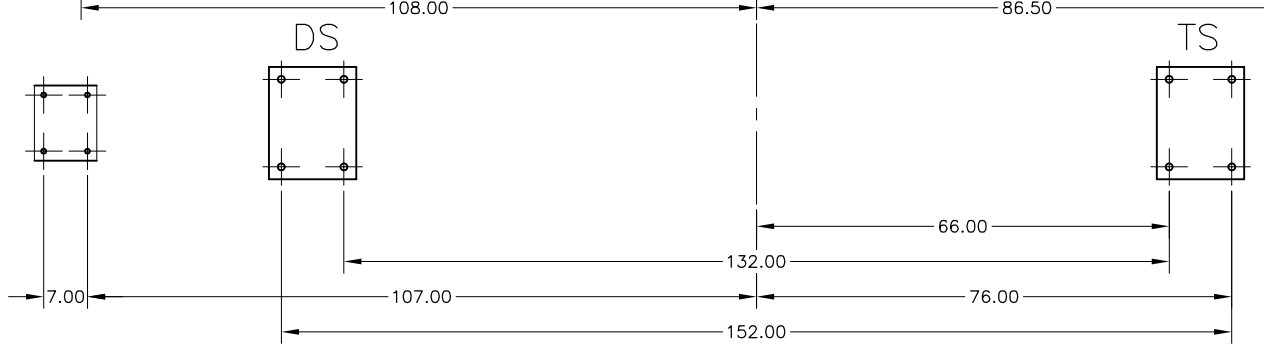

TENDING SIDE VIEW

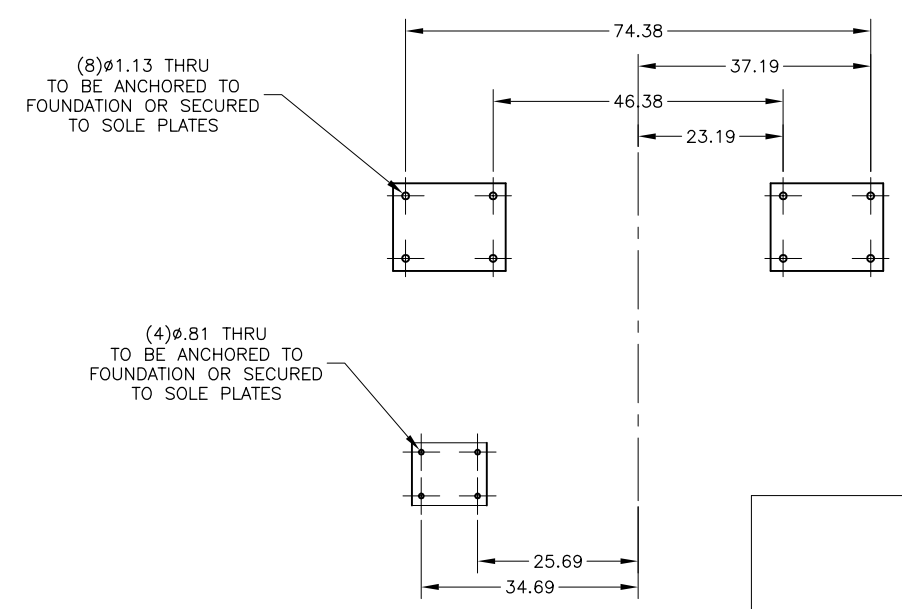

DATE	NAME	APPR.	INIT.	REVISION	ECO	ZONE	NO. REV.
1/14/09	TME	BSP		MIRRORED LOCATION OF DRYER CYLINDER	2655 HF		A

THIS DRAWING, PROPERTY OF: **GL&V Inc.** MAY NOT BE COPIED OR DISTRIBUTED WITHOUT AUTHORIZATION.

DRAWN	CHECKED	WEIGHT	UNITS
GJF	TME	5030 LBS	☒ INCHES ☐ METRIC
DATE 10/28/08	DATE 11/5/08	INIT.	DRPR DATE

SIMILAR TO | SUPERSEDES

GL&V Paper Group inc.

TITLE: FRAMING ELEVATION GAS FIRED FOOD DRYER

CATEGORY	SCALE	MACH. NO.	PAGE
DRYER	1:15	#1	1 OF 1

JOB NUMBER: HU00013061 | DWG NO.: A4010-00-0011D A

D-(22x34)

54

Parts List					
ITEM	QTY	Description (English)	IDENT. NO.	MATERIAL	NOTES
1	1	DRYER, ASS'Y, 60" DIA X 120.00	A4032–00–0111D	–	
2	1	HC511–108" FS (1) SLOT BURNER	FLYNN – 08–3433–01		
3	1	BURNER SUPPORT, TS, GAS FIRED FOOD DRYER	D4096–00063C	–	SEE NOTE 2
4	1	BURNER SUPPORT, DS, GAS FIRED FOOD DRYER	D4096–00064C	–	SEE NOTE 2
5	1	BURNER SUPPORT, CENTER, GAS FIRED FOOD DRYER	D4096–00065C	–	
6	2	TOP PLATE, GFFD	D4096–00068B	–	SEE NOTE 2
7	1	COMBUSTION AIR SCOOP, GAS FIRED FOOD DRYER	D4096–00060C	–	SEE NOTE 3
8	4	SCREW, ZN PL, GR5, HEX HD CAP, IMP RH, 0.375–16 X 1.000	02050286	ZN PL GR5	SEE NOTE 5
9	4	SCREW, ZN PL, GR5, HEX HD CAP, IMP RH, 0.375–16 X 1.500	02050436	–	SEE NOTE 5
10	24	SCREW, HOT DIP GALV, A–325, HEX HD CAP, IMP RH, 0.750–10 X 4.500	217119–582	GALV A–325	SEE NOTE 5
11	24	NUT, HOT DIP GALV, A–325, HEX, IMP RH, 0.750–10 REG	989546–018	GALV A–325	SEE NOTE 5
12	24	NUT, ZN PL, GR5, HEX, IMP RH, 0.750–10, JAM	884523–057	ZN PL GR5	SEE NOTE 5
13	1	PIPE, 1.50 SCHEDULE 40 X 57.50		GALV STL	SEE NOTE 6
14	2	FTNG, PIPE, EL, 90°, 1.50 NPT (MCMASTER #44605K118)	269254– 3001	MALLEABLE IRON	SEE NOTE 6
15	1	ANTI–ROTATION SUPPORT, GFFD	D4096–00072B	STL	SEE NOTE 7

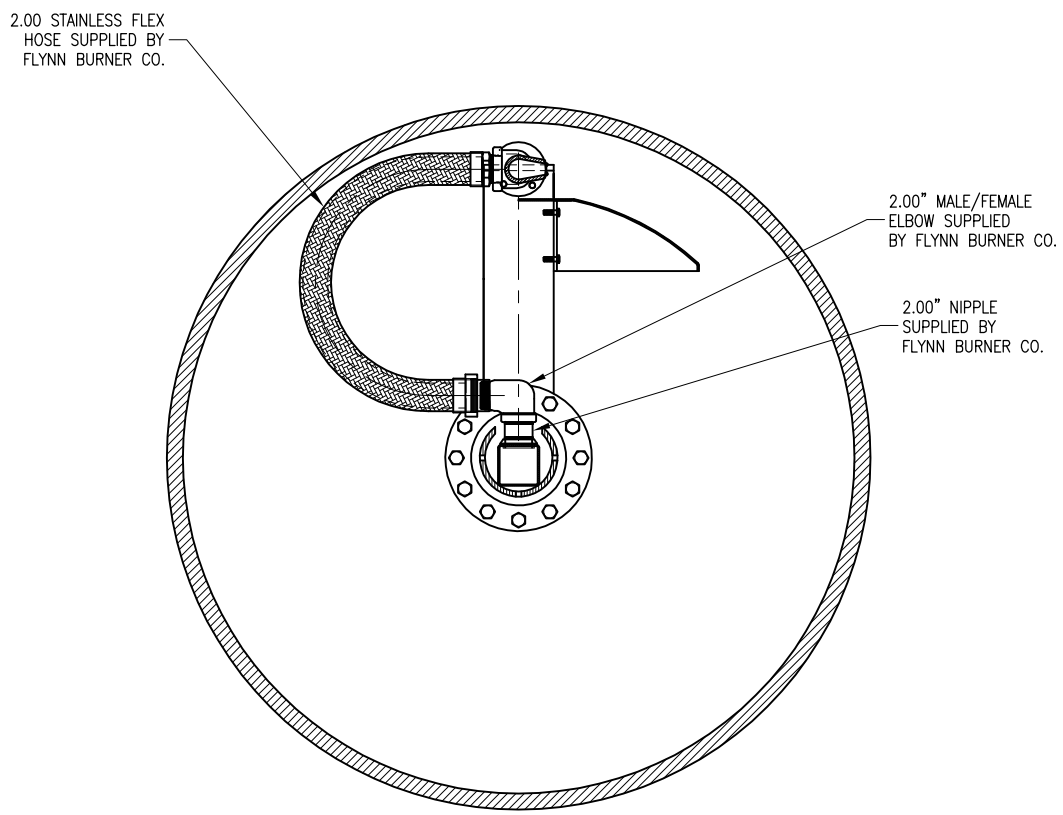

SECTION A-A
SCALE – 1:8
TYP (3) LOCATIONS

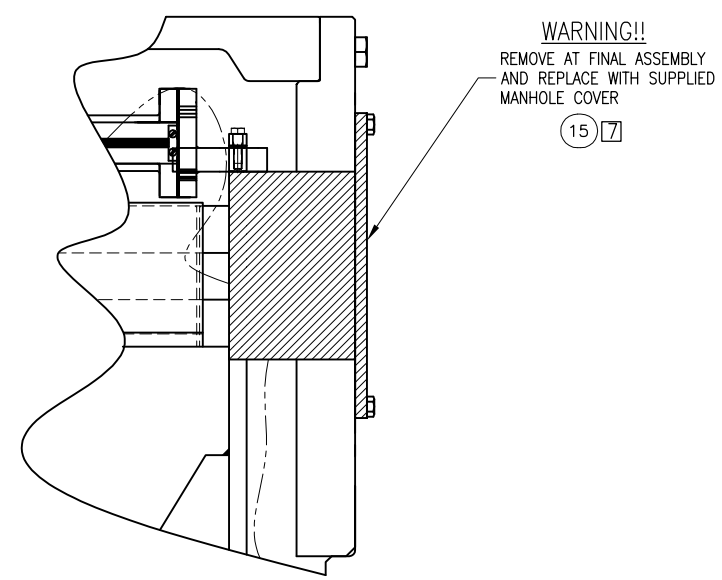

DETAIL B
SCALE – 1:4

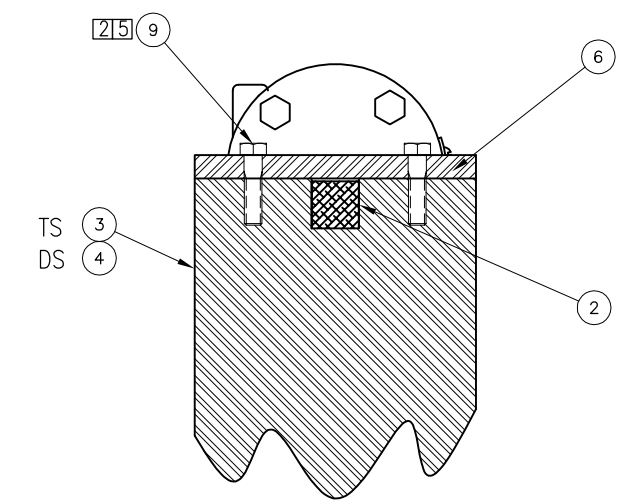

SECTION C-C
SCALE 1:2
TYP (2) LOCATIONS

DATE	NAME	APPR.	INIT.	REVISION	ECO	ZONE	NO. REV.
							△
							△
							△

IF NOT SPECIFIED (DIMENSIONS = MILLIMETER)
FABRICATION & CASTING TOLERANCE: ± 1 0 A/TO 1000; ± 3 1000 A/TO +; ANGULAR ± 1°
MACHINED TOLERANCE: X.X ± 0.5; X.XX ± 0.2; X.XXX ± 0.1; X.XXX X.XXX; ANGULAR ± 0.5°
WELD EVERYWHERE

IF NOT SPECIFIED (DIMENSIONS = INCH)
FABRICATION & CASTING TOLERANCE: ± 1/16 0 A/TO 36; ± 1/8 36 A/TO +; ANGULAR ± 1°
MACHINED TOLERANCE: X.X ± 0.020; X.XX ± 0.010; X.XXX ± 0.005; X.XXX X.XXX; ANGULAR ± 0.5°
WELD EVERYWHERE

THIS DRAWING, PROPERTY OF: GLAV Inc. MAY NOT BE COPIED OR DISTRIBUTED WITHOUT AUTHORIZATION.

SIMILAR TO
SUPERSEDES
FIRST JOB REF. HU00013061
FIRST USED UPPER LEVEL A4032–00–0118D

DRAWN TME DATE 11–7–08
CHECKED ECS DATE 12/12/08
INIT.

GLAV Paper Group inc.

TITLE DRYER & BURNER ASSEMBLY

WEIGHT | UNITS ☒ INCHES ☐ METRIC | SCALE 1:8 | PAGE 1 OF 2
APPROVED | APPR DATE | DWG NO. A4096–00–0015D △0

D–(22x34)

NOTES:

1. SECURE TS & DS BURNER SUPPORTS (ITEMS 3&4) TO CENTER BURNER SUPPORT (ITEM #5) W/.75–10 HEX HD CAP SCREWS (ITEM #10), .75–10 HEX NUTS (ITEM #11) AND .75–10 JAM NUTS (ITEM #12).

2. MOUNT BURNER (ITEM #2) TO INNER BURNER SUPPORTS (ITEMS 3,4&5) BY SETTING 1.00" SQUARE PEG ON BURNER END CAP INTO THE SLOT ON TS & DS BURNER SUPPORTS (ITEMS 3&4). SEE DETAIL C. SECURE BURNER BY FASTENING TOP PLATE (ITEM #6) TO EACH END SUPPORT USING .38–16 HEX HD CAP SCREWS (ITEM #9).

3. SECURE COMBUSTION AIR SCOOP (ITEM #7) TO TS & DS BURNER SUPPORTS (ITEMS 3&4) USING .38–16 HEX HD CAP SCREWS (ITEM #8).

4. PLACE 1.50" PIPE (ITEM #13) W/FEMALE NPT ELBOWS (ITEM #14) ON EACH END IN PRE CUT HOLES ON DS BURNER SUPPORT (ITEM #4). TACK WELD PIPE IN PLACE AS SHOWN.

5. COAT ALL HARDWARE W/JET–LUBE KOPR–KOTE HIGH TEMPERATURE ANTI–SIEZE. TORQUE .38–16 SCREWS TO 18 FT–LBS. TORQUE .75–10 SCREWS TO 225 FT–LBS.

6. COAT ALL PIPE THREADS WITH JET–LUBE SS–30.

7. ANTI–ROTATION SUPPORT (ITEM #15), AS SHOWN IN DETAIL B, IS TO BE USED DURING SHIPMENT AND ASSEMBLY ONLY!! IT IS TO BE PAINTED RED AND REMOVED AT FINAL ASSEMBLY AND REPLACED WITH ORIGINAL MANHOLE COVER.

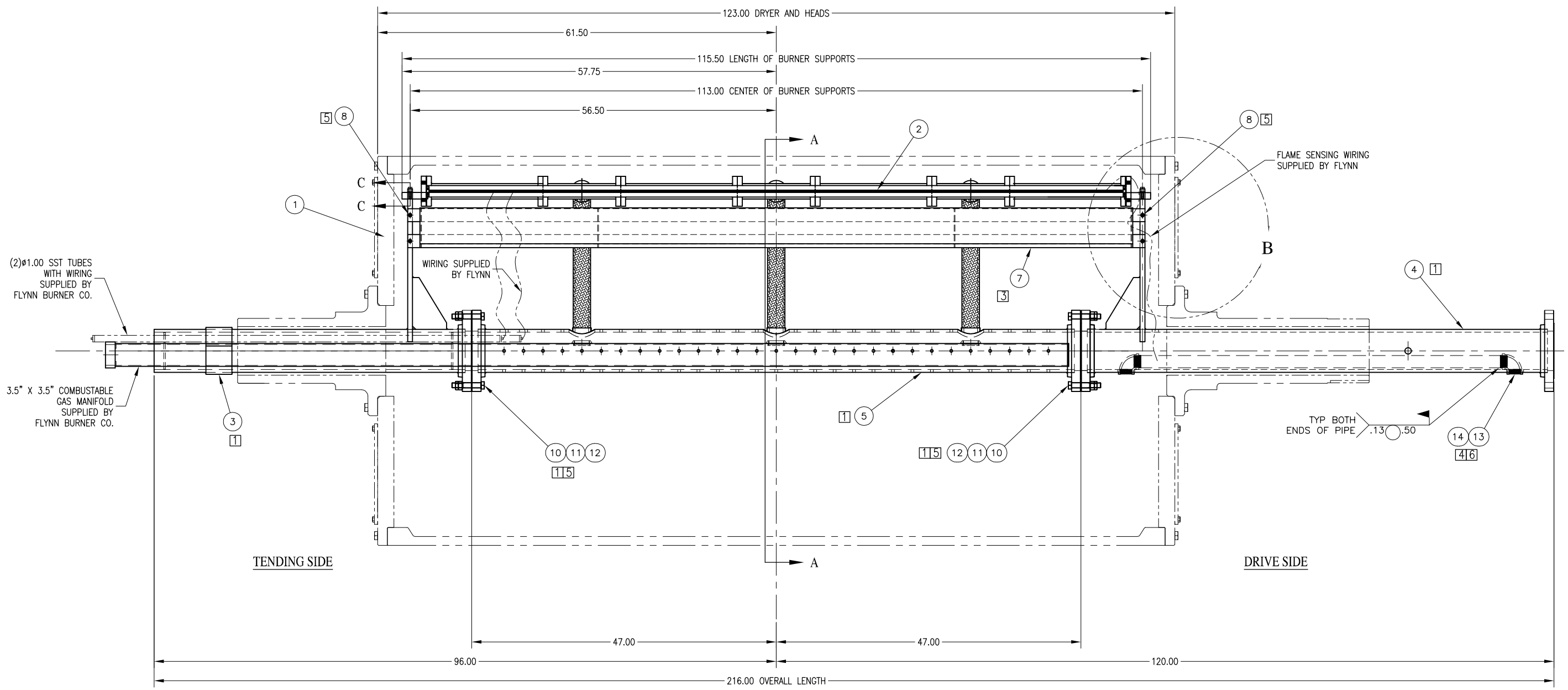

DATE	NAME	APPR.	INIT.	REVISION	ECO	ZONE	NO. REV.
							△
							△
							△

IF NOT SPECIFIED (DIMENSIONS = MILLIMETER)
FABRICATION & CASTING TOLERANCE: ± 1 0 A/TO 1000; ± 3 1000 A/TO +; ANGULAR ± 1°
MACHINED TOLERANCE: X.X ± 0.5; X.XX ± 0.2; X.XXX ± 0.1; X.XXX; X.XXX; ANGULAR ± 0.5°
WELD EVERYWHERE

IF NOT SPECIFIED (DIMENSIONS = INCH)
FABRICATION & CASTING TOLERANCE: ± 1/16 0 A/TO 36; ± 1/8 36 A/TO +; ANGULAR ± 1°
MACHINED TOLERANCE: X.X ± 0.020; X.XX ± 0.010; X.XXX ± 0.005; X.XXX; X.XXX; ANGULAR ± 0.5°
WELD EVERYWHERE

THIS DRAWING, PROPERTY OF: GL&V Inc. MAY NOT BE COPIED OR DISTRIBUTED WITHOUT AUTHORIZATION.

SIMILAR TO
SUPERSEDES
FIRST JOB REF. HU00013061
FIRST USED UPPER LEVEL A4032–00–0118D

DRAWN TME DATE 11–7–08
CHECKED ECS DATE 12/12/08
INT.

GL&V Paper Group inc.

TITLE DRYER & BURNER ASSEMBLY

WEIGHT | UNITS ☒ INCHES ☐ METRIC | SCALE 1:8 | PAGE 1 OF 2
APPROVED | APPR DATE | DWG NO. A4096–00–0015D △0

D–(22x34)

Parts List					
ITEM	QTY	Description (English)	IDENT. NO.	MATERIAL	NOTES
1	1	DRYER & BURNER ASSEMBLY	A4096-00-0015DGA	–	
2	1	HOUSING, BEARING ASS'Y (23056), FREE	216C00241GA	–	SEE NOTE 1
3	1	HOUSING, BEARING ASS'Y (23056), HELD	216C00241GB	–	SEE NOTE 1

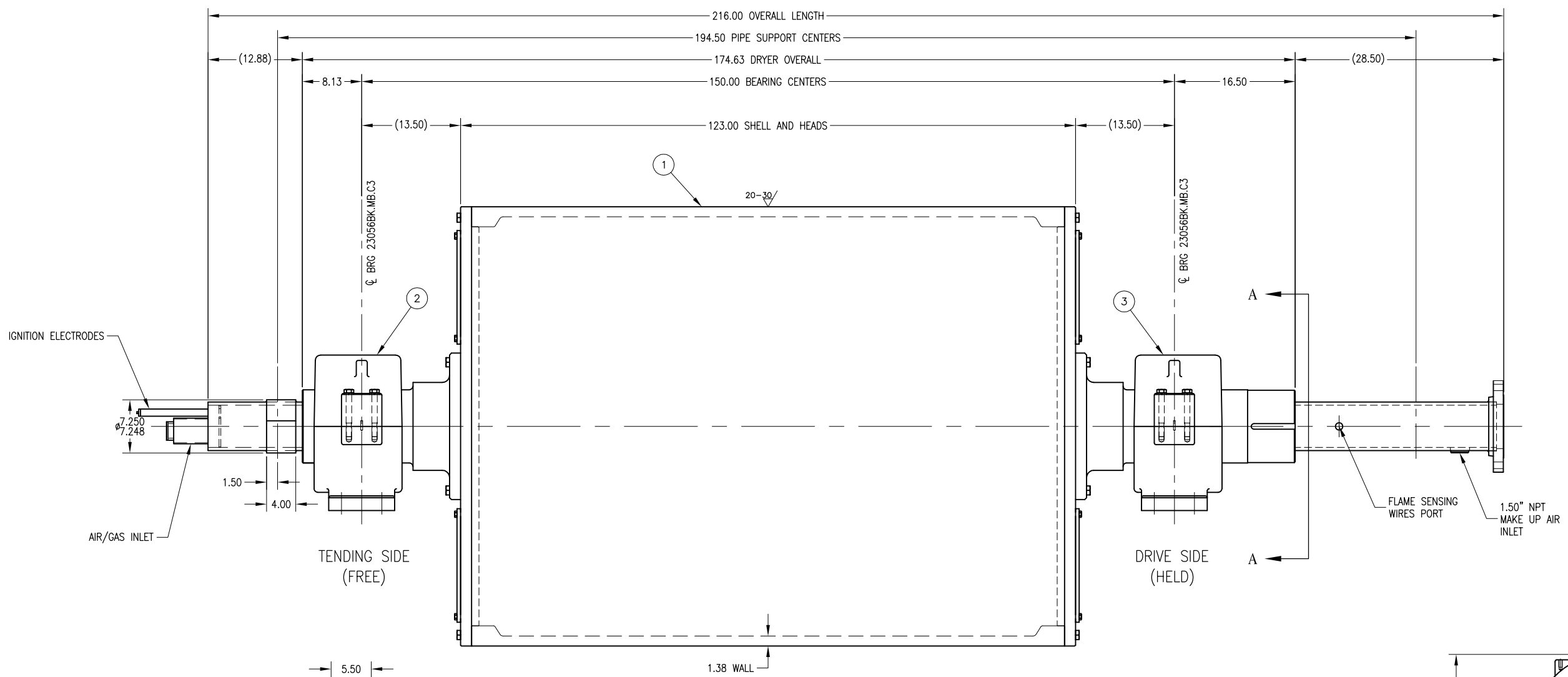

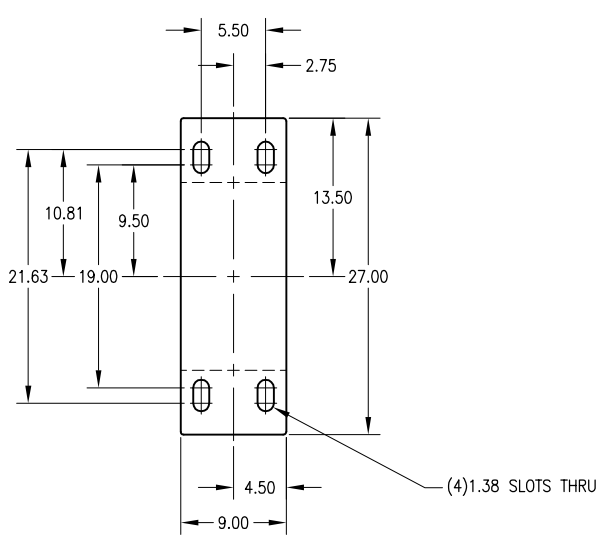

BEARING HOUSING FOOTPRINT

TYPICAL BOTH SIDES

NOTES:

1. DRYER BEARINGS TO BE PRE-PACKED WITH LUBRIPLATE SYNXTREME FG-2 GREASE.

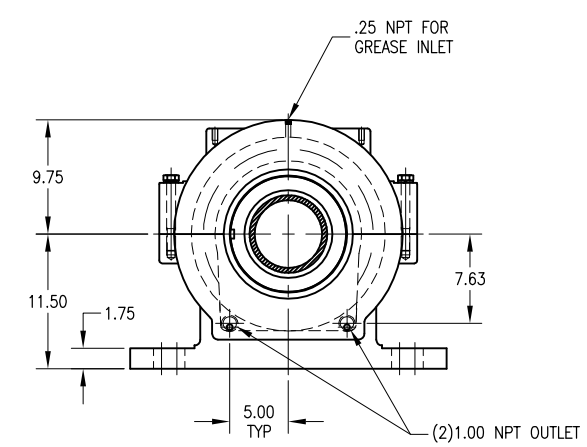

SECTION A-A

DATE	NAME	APPR.	INT.	REVISION	ECO	ZONE	NO. REV.
							△
							△
							△

IF NOT SPECIFIED (DIMENSIONS = MILLIMETER)
FABRICATION & CASTING TOLERANCE: ± 1 0 A/TO 1000; ± 3 1000 A/TO +; ANGULAR ± 1°; WELD EVERYWHERE
MACHINED TOLERANCE: X.X ± 0.5; X.XX ± 0.2; X.XXX ± 0.1; X.XXX X.XXX; ANGULAR ± 0.5°

IF NOT SPECIFIED (DIMENSIONS = INCH)
FABRICATION & CASTING TOLERANCE: ± 1/16 0 A/TO 36; ± 1/8 36 A/TO +; ANGULAR ± 1°; WELD EVERYWHERE
MACHINED TOLERANCE: X.X ± 0.020; X.XX ± 0.010; X.XXX ± 0.005; X.XXX X.XXX; ANGULAR ± 0.5°

THIS DRAWING, PROPERTY OF: GLAV Inc. MAY NOT BE COPIED OR DISTRIBUTED WITHOUT AUTHORIZATION.

SIMILAR TO: A4032-00-0061D
SUPERSEDES:
FIRST JOB REF.: HU00013061
FIRST USED UPPER LEVEL: M4425-001-40-001EHU

DRAWN: TME DATE: 12/1/08
CHECKED: TJL DATE: 12/4/08
INT.

GLAV Paper Group inc.

TITLE: DRYER & BRG HSG ASSY
GAS FIRED FOOD DRYER

WEIGHT: 15,850 LBS
UNITS: [X] INCHES [ ] METRIC
SCALE: 1:8
PAGE: 1 OF 1
APPROVED
APPR DATE
DWG NO. A4032-00-0118D △0

D-(22x34)

JOB #	DATE	NEXT ASSEMBLY	GROUP
HU00013061	12/9/08	M4425-001-40-001EHU	A

Parts List

ITEM	QTY	Description (English)	IDENT. NO.	MATERIAL	NOTES
1	1	5 HP, SEW EURODRIVE GEARMOTOR	KT87DV100L4MM30CBW2	–	
2	1	BASE, DRIVE SYSTEM	D4005-00034D	–	
3	1	FEMALE CLEVIS, GEAR MOTOR	D4005-00035C	–	
4	1	PILLOW BLOCK BEARING, 2-7/16" BORE, FREE	DODGE P4B-IP-207RE	CI	
5	1	PILLOW BLOCK BEARING, 2-7/16" BORE, HELD	DODGE P4B-IP-207R	CI	
6	1	DRIVE SHAFT, GAS FIRED FOOD DRYER	D4005-00036B	–	
7	1	SPROCKET, DRIVER, 33 TOOTH, 'B' HUB, 2-7/16" BORE	243911-3000	STL	
8	1	SPROCKET, DRIVEN, 'C' HUB W/ .750 WD X .375 DP KEYWAY	TSUBAKI 80C132F-10	STL	
9	1	ROLLER CHAIN, DRIVE, LUBE FREE, ANSI 80 X 30' LG	TSUBAKI 80RIV LAMRB	STL	
10	1	PIN ARRANGEMENT, TORQUE ARM	D4005-00037B	STL	
11	1	SHIMPACK, FEMALE CLEVIS	D4005-00038B	–	
12	8	SCREW, ZN PL, GR5, HEX HD CAP, IMP RH, 0.625-11 X 2.500	02050378	–	
13	2	SCREW, ZN PL, GR5, HEX HD CAP, IMP RH, 0.750-10 X 1.750	02050284	–	

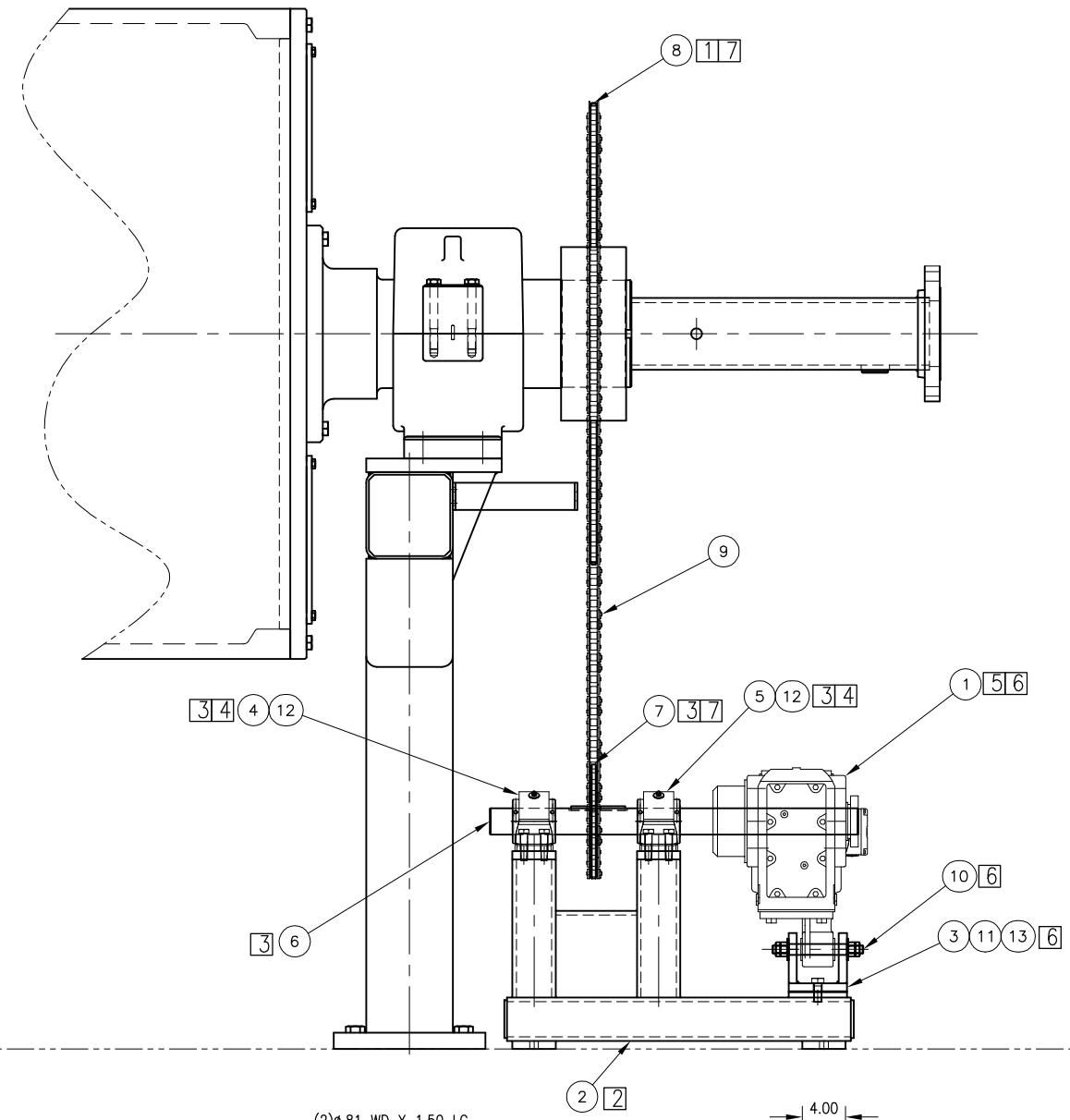

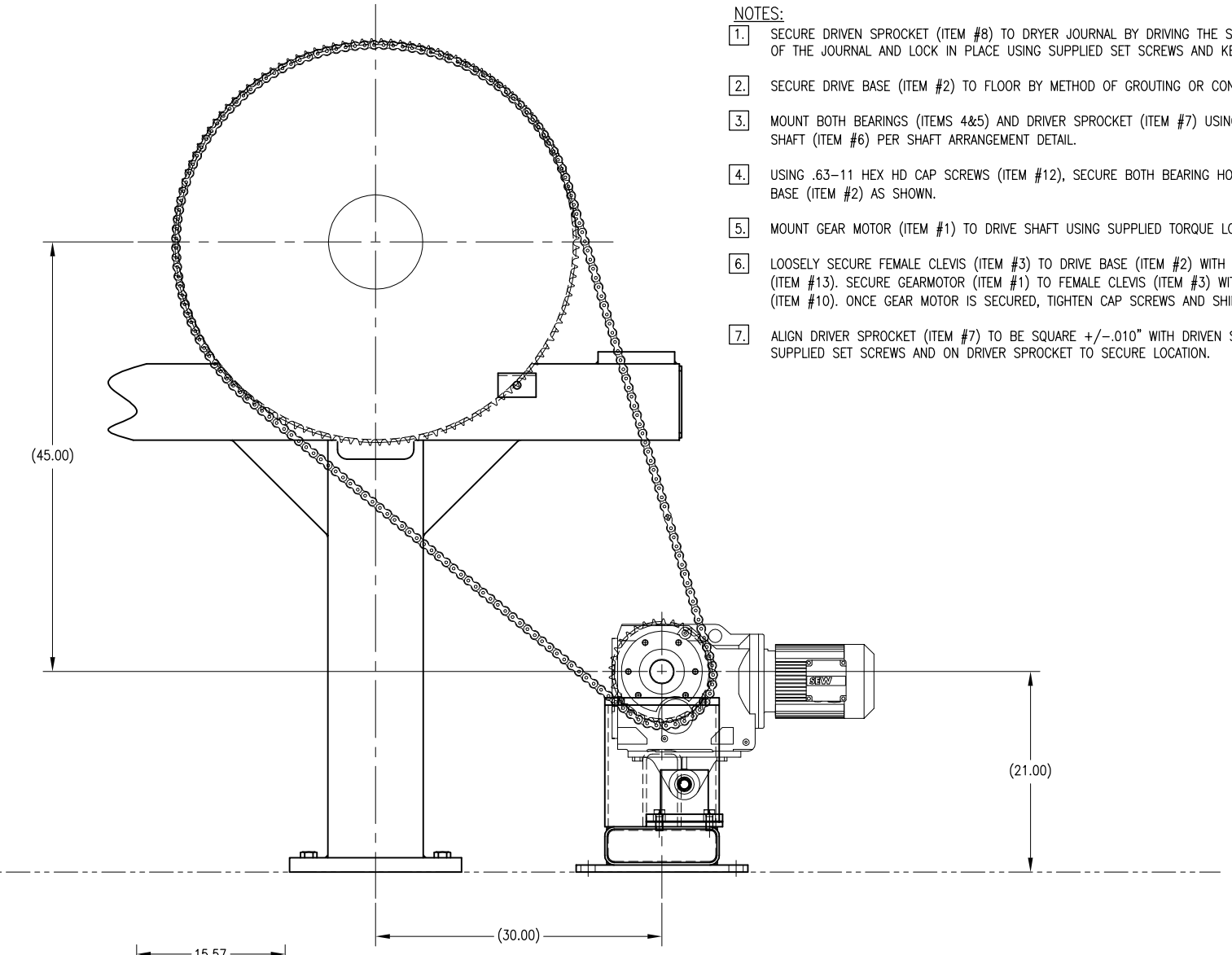

NOTES:

1. SECURE DRIVEN SPROCKET (ITEM #8) TO DRYER JOURNAL BY DRIVING THE SPROCKET AGAINST THE RADIUS OF THE JOURNAL AND LOCK IN PLACE USING SUPPLIED SET SCREWS AND KEY.
2. SECURE DRIVE BASE (ITEM #2) TO FLOOR BY METHOD OF GROUTING OR CONNECTION TO SOLE PLATE.
3. MOUNT BOTH BEARINGS (ITEMS 4&5) AND DRIVER SPROCKET (ITEM #7) USING SUPPLIED KEY TO DRIVE SHAFT (ITEM #6) PER SHAFT ARRANGEMENT DETAIL.
4. USING .63-11 HEX HD CAP SCREWS (ITEM #12), SECURE BOTH BEARING HOUSINGS (ITEMS 4&5) TO DRIVE BASE (ITEM #2) AS SHOWN.
5. MOUNT GEAR MOTOR (ITEM #1) TO DRIVE SHAFT USING SUPPLIED TORQUE LOK BUSHING.
6. LOOSELY SECURE FEMALE CLEVIS (ITEM #3) TO DRIVE BASE (ITEM #2) WITH .75-10 HEX HD CAP SCREWS (ITEM #13). SECURE GEARMOTOR (ITEM #1) TO FEMALE CLEVIS (ITEM #3) WITH SUPPLIED PIN ARRANGEMENT (ITEM #10). ONCE GEAR MOTOR IS SECURED, TIGHTEN CAP SCREWS AND SHIM AS NECCESSARY (ITEM #11).
7. ALIGN DRIVER SPROCKET (ITEM #7) TO BE SQUARE +/-.010" WITH DRIVEN SPROCKET (ITEM #8) AND FASTEN SUPPLIED SET SCREWS AND ON DRIVER SPROCKET TO SECURE LOCATION.

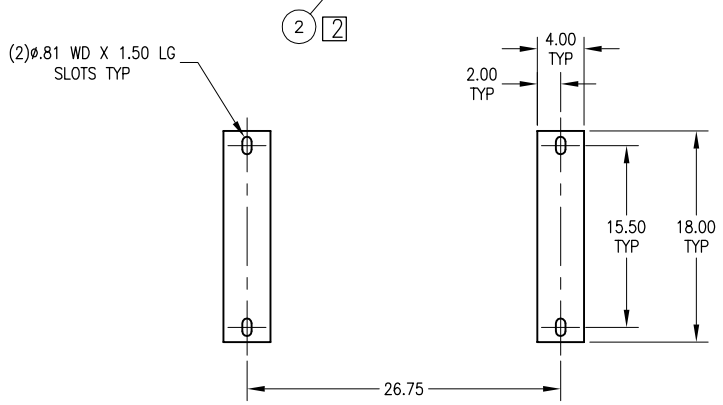

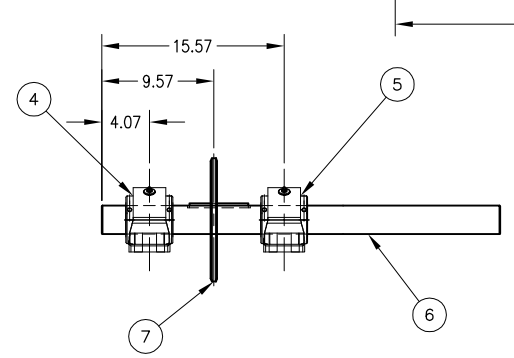

SHAFT ARRANGEMENT DETAIL

DATE	NAME	APPR.	INIT.	REVISION	ECO	ZONE	NO. REV.

IF NOT SPECIFIED (DIMENSIONS = MILLIMETER)
FABRICATION & CASTING TOLERANCE: ± 1 0 A/TO 1000; ± 3 1000 A/TO +; ANGULAR ± 1'; WELD EVERYWHERE
MACHINED TOLERANCE: X.X ± 0.5; X.XX ± 0.2; X.XXX ± 0.1; X.XXX X.XXX ANGULAR ± 0.5'

IF NOT SPECIFIED (DIMENSIONS = INCH)
FABRICATION & CASTING TOLERANCE: ± 1/16 0 A/TO 36; ± 1/8 36 A/TO +; ANGULAR ± 1'; WELD EVERYWHERE
MACHINED TOLERANCE: X.X ± 0.020; X.XX ± 0.010; X.XXX ± 0.005; X.XXX X.XXX ANGULAR ± 0.5'

THIS DRAWING, PROPERTY OF: GLAV Inc. MAY NOT BE COPIED OR DISTRIBUTED WITHOUT AUTHORIZATION.

SIMILAR TO
SUPERSEDES
FIRST JOB REF. HU00013061
FIRST USED UPPER LEVEL M4425-001-40-001EHU

DRAWN TME DATE 12/1/08
CHECKED ECS DATE 12/9/08
INT.
APPROVED APPR DATE

GLAV Paper Group inc.

TITLE DRIVE SYSTEM ASS'Y GAS FIRED FOOD DRYER

WEIGHT N/A | UNITS ☒ INCHES ☐ METRIC | SCALE 1:8 | PAGE 1 OF 1

DWG NO. A4005-00-0011D

D-(22x34)

Parts List					
ITEM	QTY	Description (English)	IDENT. NO.	MATERIAL	NOTES
1	1	VALVE,MANUAL LOCKOUT–3 WAY– 2 POSN–NORGREN #T73E–4AA–P1N, .5 NPT	267131–513	NONE	
2	1	FILTER REGULATOR,COMBO– NORGREN #B73G–4AK–AD3–RMG, 40 MICRON, 5–150 PSI, .5 NPT	276684–3007	–	
3	4	CONNECTOR,TUBE MALE–TUBE TO MALE PIPE–SWAGELOK #SS–810–1–8, .5 X .5	257761–105	STST316	
4	4	CONNECTOR,TUBE MALE–TUBE TO MALE PIPE–SWAGELOK #SS–810–1–12 .5 X .75	257761–125	STST316	
5	2	TEE,TUBE UNION–TUBE ALL PORTS– SWAGELOK #SS–810–3, .5	257733–103	STST316	

NOTES:

1. TUBE LENGTH FROM TEE TO CYLINDER TO BE EQUAL LENGTH FROM FRONT SIDE TO BACK SIDE.

2. REFERENCE PLI VS PSI LOADING DIAGRAM LOCATED IN OPERATION MANUAL FOR DOCTOR LOADING.

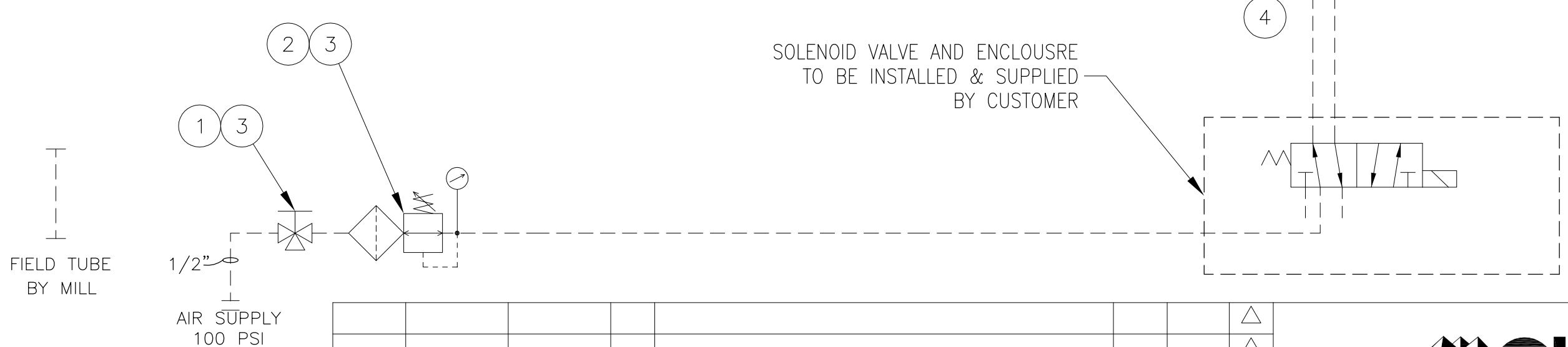

DATE	NAME	APPR.	INIT.	REVISION	ECO	ZONE	NO. REV.

IF NOT SPECIFIED (DIMENSIONS = MILLIMETER)

FABRICATION & CASTING TOLERANCE	MACHINED TOLERANCE
± 1 0 A/TO 1000 ± 3 1000 A/TO + ANGULAR ± 1°	X.X ± 0.5 X.XX ± 0.2 X.XXX ± 0.1 X.XXX / X.XXX ANGULAR ± 0.5°
WELD EVERYWHERE	

IF NOT SPECIFIED (DIMENSIONS = INCH)

FABRICATION & CASTING TOLERANCE	MACHINED TOLERANCE
± 1/16 0 A/TO 36 ± 1/8 36 A/TO + ANGULAR ± 1°	X.X ± 0.020 X.XX ± 0.010 X.XXX ± 0.005 X.XXX / X.XXX ANGULAR ± 0.5°
WELD EVERYWHERE	

THIS DRAWING, PROPERTY OF: GL&V Inc. MAY NOT BE COPIED OR DISTRIBUTED WITHOUT AUTHORIZATION.

SIMILAR TO
SUPERSEDES
FIRST JOB REF.
FIRST USED UPPER LEVEL

DRAWN TME
DATE 12/10/08
CHECKED ECS
INIT.
DATE 12/12/08

GL&V Paper Group inc.

TITLE DOCTOR PIPING DIAGRAM

WEIGHT	UNITS	SCALE	PAGE
N/A	☒ INCHES ☐ METRIC	NTS	1 OF 1

APPROVED | APPR DATE | DWG NO. D4065–00194B | 0

59

B–(11×17)

JOB #	DATE	NEXT ASSEMBLY	GROUP
HU00013061	11-3-08	M4425-001-40-001EHU	A

Parts List

ITEM	QTY	Description (English)	IDENT. NO.	NOTES
1	1	(2) 4 DRIVE HS-42 WITH 55x31 SS TRAY & COMMON BASE	ERIEZ 4R-200808987	(REF DWG D4096-00066D)
2	1	SCHEMATIC & OUTLINE	ERIEZ 3N-9955273	(REF DWG D4096-00067D)

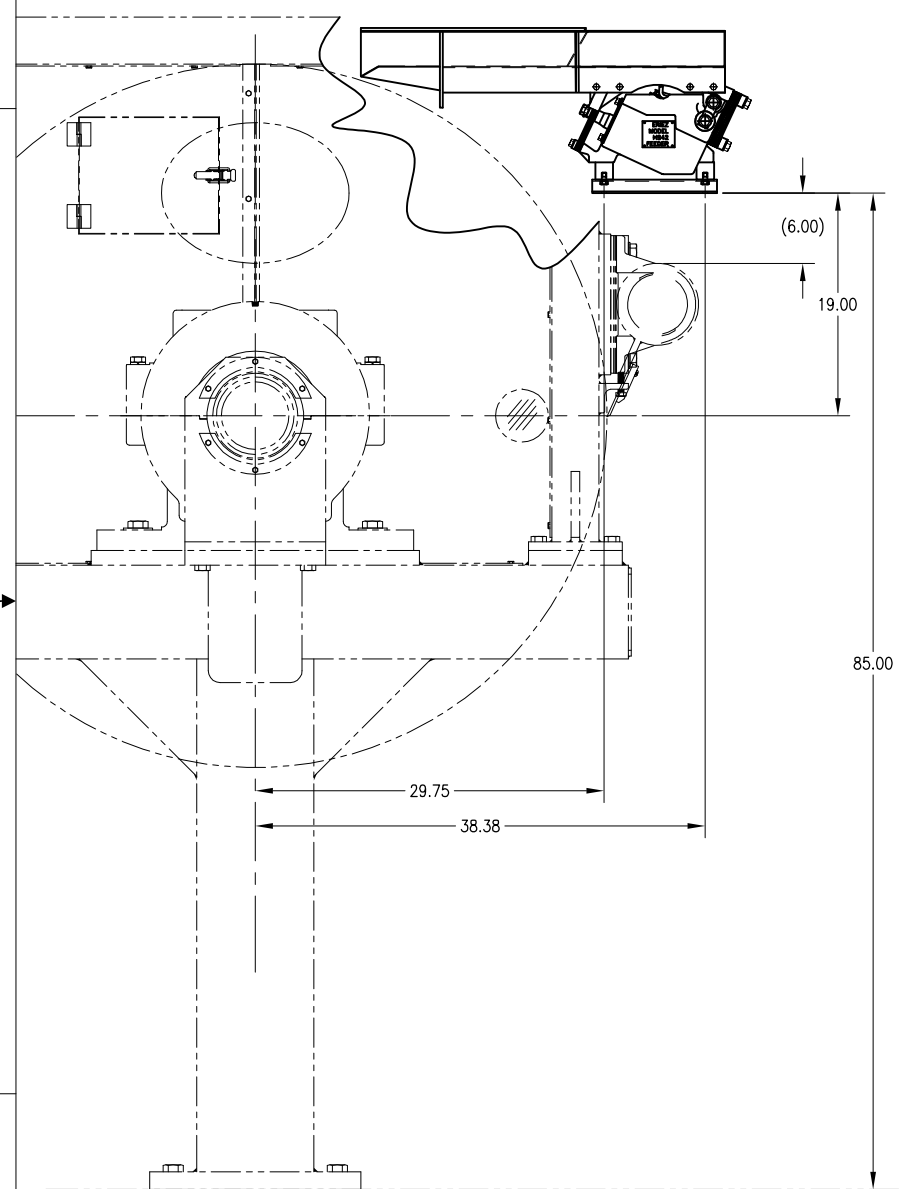

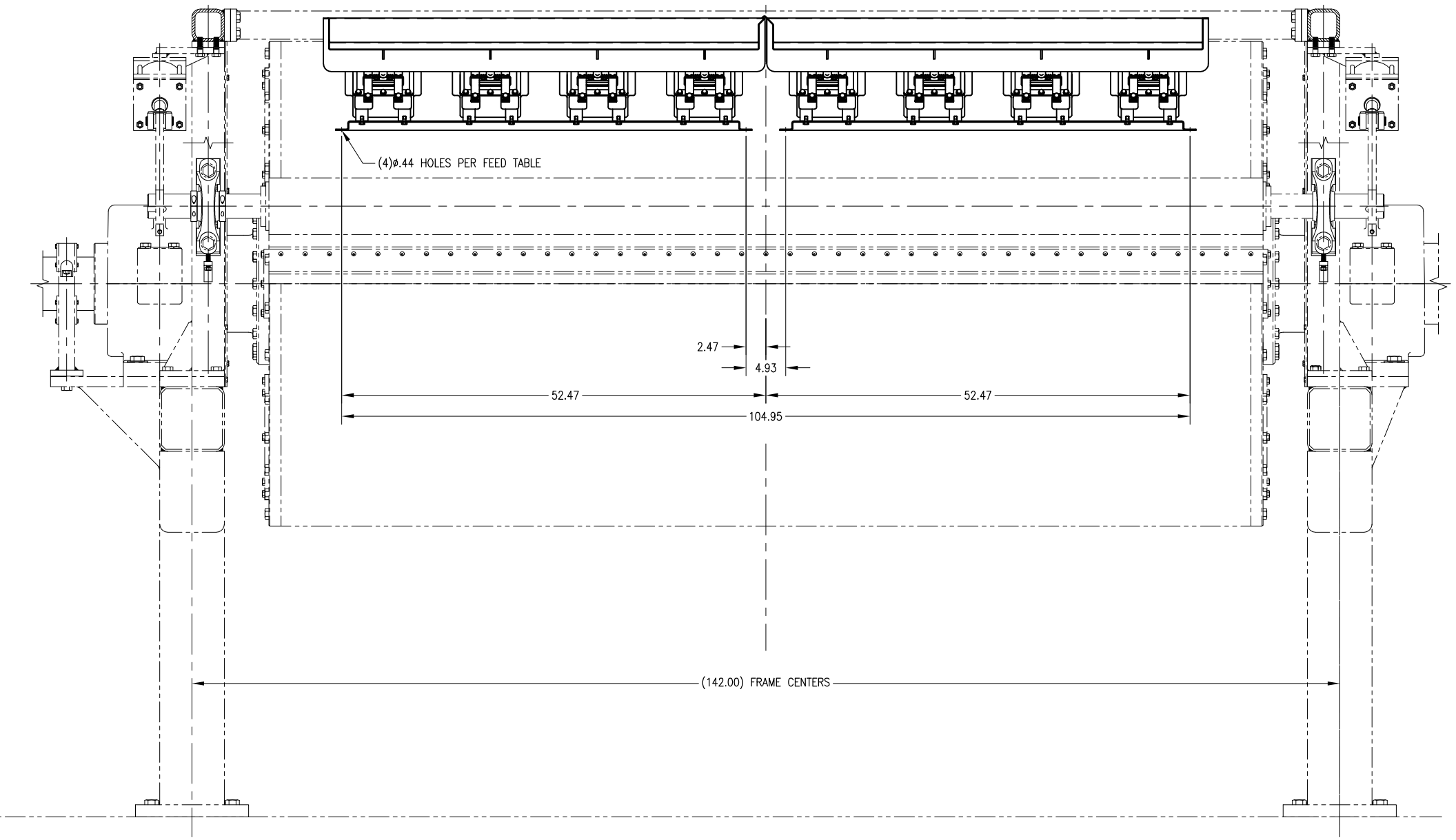

NOTES:

1. VIBRATORY FEED TRAY TO BE INSTALLED AND SECURED BY OTHERS. IT IS NECCESSARY THAT ITEM #1 TO BE MOUNTED TO A STRUCTURE THAT TIES INTO THE FOUNDATION AND/OR SOLE PLATES AND NOT THE DRYER SYSTEM.

2. ITEM #2 TO BE MOUNTED REMOTELY FROM ITEM #1 AT THE DISCRETION OF THE CUSTOMER.

DATE	NAME	APPR.	INIT.	REVISION	ECO	ZONE	NO. REV.

THIS DRAWING, PROPERTY OF: GL&V Inc. MAY NOT BE COPIED OR DISTRIBUTED WITHOUT AUTHORIZATION.

DRAWN	CHECKED	WEIGHT	UNITS
TME	TJL	N/A	[X] INCHES [ ] METRIC
DATE 11/6/08	DATE 11/6/08	INIT.	DRPR DATE

SIMILAR TO | SUPERSEDES

GL&V Paper Group Inc.

TITLE: VIBRATORY FEED PLATE ASSY, GFFD

CATEGORY	SCALE	MACH. NO.	PAGE
DRYER	1:8		1 OF 1

JOB NUMBER: HU00013061

DWG NO.: A4096-00-0016D 0

D-(22x34)

Appendix C: Powder Scan Results

GTI
Toasted Powder Test Scans

Number	Test Number	Scan	Appearance
1	400-10-00-16	89.5	Light
2	400-10-50-16	94.5	Light
3	400-10-00-15	81.5	Light
4	400-10-25-15	85.5	Light
5	400-10-50-15	91.5	Light
6	400-10-75-15	95	Light
7	400-20-00-16	75.5	Medium
8	400-20-25-16	80.5	Light
9	400-20-50-16	86	Light
10	400-20-75-16	90.5	Light
11	400-25-00-15	59	Dark
12	400-30-00-16	56.5	Medium, specky
13	400-30-25-16	63.5	Dark, specky
14	400-30-50-16	71.5	Light, specky
15	400-30-75-16	81.5	Light, specky
16	400-40-00-16	60	Dark, specky
17	400-40-25-16	66.5	Medium dark, specky
18	400-40-50-16	74	Medium, specky
19	400-50-25-15	54	Dark, specky
20	400-50-50-15	65	Dark, specky
21	400-50-25-16	57	Dark, specky
22	400-50-75-16	77.5	Light, specky
23	400-75-00-15	41	Very dark, specky
24	400-75-25-15	48	Dark, specky
25	400-75-50-15	60	Dark, specky
26	400-75-75-15	74	Light, Specky
27	480-10-00-15	61	Dark, specky
28	480-10-50-15	78.5	Light, specky
29	480-25-00-15	50	Dark, specky
30	480-25-25-15	57	Dark, specky
31	480-25-50-15	68.5	Medium dark, specky
32	480-25-75-15	83.5	Light, specky
33	480-50-00-15	36.5	Very dark, specky
34	480-50-25-15	47	Very dark, specky
35	480-50-50-15	52.5	Very dark, specky
36	480-50-75-15	75.5	Very light, specky
37	360-20-25-17	88.5	Very light, specky
38	360-30-00-17	77	Medium light
39	360-30-25-17	83.5	Light
40	360-30-50-17	89.5	Light
41	360-30-75-17	94	Light
42	320-20-75-17	98	Light
43	320-80-75-15	96.5	Light
44	360-10-00-17	93.5	Light
45	360-10-25-17	94	Light
46	360-10-50-17	96	Light
47	360-50-00-17	64.5	Dark, specky
48	360-50-50-17	80.5	Light
49	360-50-75-17	89.5	Light
50	400-10-00-17	85	Light

GTI
Toasted Powder Test Scans

51	400-10-50-17	91.5	Light
52	400-10-75-17	96	Very light
53	400-20-00-17	79.5	Medium, specky
54	400-25-25-15	65.5	Dark, specky
55	400-30-50-17	83	Light
56	400-40-00-17	57.5	Dark
57	400-40-75-17	84	Light
58	400-50-25-17	55.5	Very dark, specky
59	400-50-50-17	64.5	Very dark, specky
60	360-10-00-16	92	Very light
61	360-10-25-16	93.5	Very light
62	360-10-50-16	95	Very light
63	360-10-75-16	98	Very light, specky
64	360-20-00-16	88.5	Light
65	360-20-25-16	90	Light
66	360-20-50-16	93.5	Very light
67	360-20-75-16	95	Very light
68	360-40-00-16	65	Dark, specky
69	360-40-25-16	69.5	Medium, specky
70	360-40-50-16	77.5	Light, specky
71	360-40-75-16	85.5	Light
72	360-60-00-16	51	Dark, specky
73	360-60-25-16	57	Dark, specky
74	360-60-50-16	65.5	Dark, specky
75	360-60-75-16	80.5	Light, specky
76	400-40-75-16	83.5	Light, specky
77	400-50-00-16	49	Dark, specky
78	400-50-50-16	66	Dark
79	360-20-00-15	85	Light, specky
80	360-30-50-15	88.5	Very light, specky
81	320-20-00-15	96	Very light
82	320-50-00-15	94	Very light
83	320-20-00-16	95	Very light
84	320-20-50-16	97	Very light
85	320-50-75-16	97.5	Very light
86	320-80-00-16	78	Light, good appearance *
87	320-80-25-16	83.5	Light
88	320-80-00-17	72.5	Medium, good appearance *
89	360-50-25-15	70	Medium, specky
90	360-50-00-15	62	Dark, specky
91	320-20-25-16	95	Very light
92	320-80-75-17	93	Very light
93	280-80-00-17	94	Very light
94	360-50-50-15	78.5	Light, little specky
95	320-80-50-16	89	Light
96	320-50-00-16	90.5	Light
97	400-40-25-17	67.5	Dark, specky
98	400-30-25-17	78.5	Light, specky
99	400-30-75-17	94	Very light
100	320-20-00-17	94	Very light
101	320-20-25-17	94	Very light

102	320-50-75-17	95	Very light
103	400-50-75-17	82	Light, specky
104	320-50-50-17	91	Light
105	400-40-50-17	76	Medium, specky *
106	400-20-50-17	89	Light, specky
107	360-40-25-17	73	Medium, specky *
108	360-50-25-17	68.5	Medium, specky *
109	400-20-25-17	83.5	Light, specky
110	400-30-00-17	70	Medium, specky *
111	400-50-00-17	44	Very dark, specky
112	320-80-50-15	89	Light
113	320-80-25-15	88.5	Light
114	360-80-25-15	67.5	Medium, little specky *
115	360-80-75-15	85.5	Light, specky
116	320-80-00-15	86	Light
117	320-20-50-17	95.5	Very light
118	320-20-75-15	97.5	Very light
119	320-50-75-15	96	Very light
120	360-30-75-15	92	Light
121	360-80-50-15	76.5	Medium, specky *
122	320-50-50-15	95	Very light
123	320-20-50-15	96	Very light
124	360-80-00-15	60.5	Dark, specky
125	320-20-25-15	95	Very light
126	320-50-25-15	93.5	Light
127	360-50-75-15	87	Light, specky
128	320-80-75-16	92.5	Light, specky
129	320-80-50-17	86	Light
130	320-80-25-17	79.5	Light
131	280-80-75-17	97.5	Very light
132	320-50-25-17	89	Light
133	280-80-50-17	96	Very light
134	320-50-00-17	85.5	Light
135	360-20-25-15	88	Light
136	280-50-50-15	97	Very light
137	360-20-50-15	92	Very light, specky
138	280-50-00-15	95.5	Light
139	360-30-25-15	82.5	Light, specky
140	360-30-00-15	77.5	Medium, specky *
141	360-20-75-15	94.5	Very light
142	320-50-25-16	92	Light
143	280-50-00-16	95	Very light
144	280-50-50-16	97	Very light
145	280-80-25-16	94	Very light
146	280-80-00-16	92	Very Light
147	280-50-00-17	96	Very light
148	280-50-25-16	96	Very light
149	320-20-75-16	97.5	Very light
150	280-80-25-17	94.5	Very light
151	280-50-75-17	97.5	Very light
152	320-50-50-16	94.5	Very light

153	400-25-75-15	85.5	Light, specky
154	400-50-00-15	49	Very dark, specky
155	400-25-50-15	73.5	Medium, specky
156	480-10-25-15	68.5	Medium, very specky
157	480-10-75-15	87	Light, specky
158	400-10-25-16	91.5	Light, little specky
159	400-10-75-16	96.5	Very light
160	400-20-75-17	94.5	Very light
161	360-20-10-17	85.5	Medium Light *
162	360-20-50-17	92	Light
163	360-20-75-17	94.5	Very light
164	360-40-75-17	89.5	Light, specky
165	360-40-00-17	68.5	Medium, specky
166	360-10-75-17	97.5	Light
167	360-40-50-17	82.5	Light, specky
168	400-50-75-15	80.5	Light, specky
169	400-10-25-17	89	Light
170	280-20-00-15	96.5	Very light
171	280-20-25-15	96.5	Very light
172	280-20-50-15	97	Very light
173	280-50-25-15	96	Very light
174	280-80-00-15	93.5	Very light
175	280-80-25-15	95	Very light
176	280-80-50-15	96	Very light
177	280-20-00-16	95	Very light
178	280-20-25-16	95.5	Very light
179	280-20-50-16	97.5	Very light
180	280-80-50-16	95.5	Very light
181	280-20-00-17	96.5	Very light
182	280-20-25-17	96.5	Very light
183	280-20-50-17	97.5	Very light
184	280-20-75-17	97.5	Very light
185	280-50-25-17	95.5	Very light
186	280-50-50-17	96.5	Very light
187			
188			
189			
190			
191			
192			
193			
194			
195			
196			
197			
198			
199			
200			
201			
202			
203			

Appendix D: Operating Manual (Groupe Laperrier & Verreault USA Inc.)

MACHINE DATA

Customer	Confidential Partner
Mill Location	State of California
Customer Purchase Order	
GL&V Order Number	HU00013061
Hand of Machine	Left
Burner Width	108”
Machine Speed	2-10 rpm
Balance Speed	n/a
Elevation Drawing Number	M4425-001-40-001EHU
Grade/Product	Food Powder
Basis Weight	N/A
Electric	
Drives	480 Volts, Three Phase, 60 Hz
Control	480 Volts, Three Phase, 60 Hz
Air	100 PSIG Clean and Dry

GL&V USA Inc.
27 Allen Street
Hudson Falls, NY 12839
518-747-2444 FAX: 518-747-1320

INTRODUCTION AND CONTACTS

The contents of this manual do not supersede the job contract and/or engineering drawings supplied. If questions arise as to areas of responsibility for installing and / or supplying, please refer to the job contract, engineering drawings provided, and contact:

GL&V USA Inc.
27 Allen Street
Hudson Falls, New York, 12839
Phone (518) 747-2444
Fax (518) 747-1320

This manual has been specifically prepared to provide the reader with information to comprehend, install, operate, and maintain this equipment. The information is a guide for the care and operation of this machine. Under no circumstances are the contents of this manual to be considered the only way to perform an operation, however, it is to be used as a guide to reach the ultimate goal of safe, trouble free production. The training and instruction of personnel in the safe method of operation is the user/employer's responsibility. Qualified instructors along with this manual and experience should be used for the training of new operators. Periodic refresher sessions should also be held to review the safety procedures and any contemplated operation procedural changes. As personnel become more familiar with the equipment, procedures, by necessity, will be improved and revised to include more efficient and safe operation. Safety during installation, operation, and maintenance of this equipment is the responsibility of the user. GL&V cannot address every conceivable safety problem for the life of this equipment. Common sense and good industrial practices should be enforced.

Machine areas that do require special procedures are carefully detailed to provide sufficient information. Please distribute this manual to all personnel responsible for installation, operation, and maintenance of the machinery.

Please refer to the data on the machine elevation drawing and our sales order number for rapid service.

The quality of the product being processed on this machine is highly dependent upon the accuracy of installation. The recommended tolerances and techniques of installation described in this manual will insure that you manufacture the best product possible. Please consult the certified drawings for specific information about parts and details.

Competent technical service personnel can apply these techniques and provide guidance in achieving a quality installation. Your purchase order and our sales proposal will indicate if technical startup services are included with the equipment. If startup assistance is included, coordinate with GL&V to schedule the technical service. If startup assistance is not included, technical startup services are available from GL&V, through the technical service department. These services are strongly recommended.

MODIFICATIONS OR RELOCATION OF EQUIPMENT

The equipment supplied is manufactured according to the negotiated specifications. However, during the life of the equipment, the user may desire changes and/or modifications. We recognize that these modifications will take place, and thus we are asking your assistance in keeping our records up to date. By doing so, you will insure continued accurate service when ordering parts and / or requesting assistance.

If you're contemplating modifications and / or a re-location to another plant, please contact us so that we may:

1. Offer assistance through engineering services.
2. Update our records to reflect the latest design.
3. Advise on safety considerations.
4. Review with you possible existing designs that you may want to consider using.
5. Submit appropriate proposals, complete with prices and deliveries.
6. GL&V can offer assistance in installation, start up, operator training, and maintenance programming for your new equipment. GL&V encourages you to discuss your requirements with our customer service department.

GL&V USA Inc.
27 Allen Street
Hudson Falls, NY 12839
518-747-2444 FAX: 518-747-1320

GENERAL SAFETY FOR DRYER SECTION

At GL&V, we feel that our customer's personal safety is as important as the successful operation of our equipment. The following safety tips have been compiled to help mill employees understand the potential danger areas associated with installation, operation, and maintenance of the dryer section. These safety tips are offered as a supplement to the mill safety program and are not intended to supersede a more stringent existing safety policy.

EMPLOYEE TRAINING

1. All personnel working around the equipment must be completely familiar with the function of the equipment.

2. All personnel should understand the action of the components that move and could present a hazard if not respected and used in a safe manner.

3. All personnel should be made aware of all moving or rotating components of the equipment that cause possible entanglement.

4. All personnel should be made aware of the high temperatures associated with the dryer section and the possibility of burns.

5. All clothing worn by the operating personnel should be close fitting but must permit freedom of movement.

6. Personnel should understand the control system in order to be able to de-activate machinery as quickly as possible in case of an emergency.

WORK AREA

1. The working area must be well lighted and should be kept clean and clear of obstructions.

2. Steps and walkways should be kept free from all foreign articles.

3. The floor and surrounding surfaces should be free from spilled oil, grease and water.

GL&V USA Inc.
27 Allen Street
Hudson Falls, NY 12839
518-747-2444 FAX: 518-747-1320

4. All exposed soleplates should be covered with a non-skid surface.

5. All guards and handrails should be in position during operation.

INSTALLATION SAFETY SUGGESTIONS

During the construction and installation phases, the area and nature of the work can lead to hazardous conditions.

1. Only qualified people, such as millwrights, electricians, etc., should be in the construction area. All others should be kept away.

2. Proper and safe equipment is required to be on hand to handle the many heavy pieces of machinery. Make sure that all of the safety features are checked and verified before using them.

3. Follow safe lifting practices when installing machine components. Remember that pieces should be bolted in place before removing the lifting device. Stay within the load rating of all cranes, hoists, cables, chains, slings, etc.

4. Adequate personnel protection such as safety shoes, glasses, hard hats, and gloves should be worn at all times. Special personnel protection, as may be required by the job (welder's helmets, painter's respiratory masks, etc.) should be available, in good condition and used by the installers.

5. Adhere to all codes governing the safe and proper installation of the equipment.

6. Keep the work areas clean. Do not allow waste materials to accumulate. Keep the work areas reasonably well illuminated.

7. Only bring material that is necessary into the construction area. Keep all other neatly stored out of the area.

8. Observe local fire department regulations and fire-prevention recommendations.

9. Always check to be sure personnel and equipment are clear of the area before starting any equipment.

GL&V USA Inc.
27 Allen Street
Hudson Falls, NY 12839
518-747-2444 FAX: 518-747-1320

10. Do not try to defeat any safety devices.

11. Do not move equipment overhead of any personnel until all personnel have moved to a safe location.

OPERATIONAL SAFETY SUGGESTIONS

Paper machine operation is comprised of different functions that should be thoroughly known and understood by personnel working on the machine. When they are known, it is easier to understand the safety risks that exist on the paper machine. It is of primary importance that personnel are properly trained to perform their tasks.

1. Do not operate the machinery unless authorized and trained to do so. Tasks that are not frequently performed require well-trained personnel who are aware of the proper working methods. These tasks include felt changes, roll changes, repair work on the machine. If an operator is unfamiliar with the operation of particular pieces of equipment, he must obtain the proper instructions and training prior to attempting to operate equipment.

2. The high temperatures that are present create an additional risk due to hot surfaces and the resultant fire hazard.

3. Do not wear loose clothing when operating the gas fired paper dryer. Loose clothing can be caught in rotating equipment.

4. There are numerous nip points. Keep clear of all nip points when the machine is in operation.

5. Operators must be familiar with the risk factors involved in operating and working around equipment having high temperatures.

GL&V USA Inc.
27 Allen Street
Hudson Falls, NY 12839
518-747-2444 FAX: 518-747-1320

MAINTENANCE SAFETY SUGGESTIONS

The following suggestions are offered to protect the personnel that perform maintenance on machinery.

1. The initial step to be taken before any work is done on any machinery is to ensure that the machinery will not be started accidentally. That is best accomplished by having the mechanic performing the maintenance lock-out and tag-out the power disconnect switch for the component being worked on. This lockout also applies to pneumatic and hydraulic devices. These devices can also store energy that can be released at any time. Ensure all pneumatic and hydraulic devices are locked so that the release of this energy will not cause damage or injury. Mill site procedures should be followed for lock-out and tag-out.

2. High dryer surface temperatures can cause severe burns. If work is to be performed directly on or around dryers, a proper amount of time should be allowed for the dryer to cool down. Proper cool down procedures should be followed when shutting the dryer section down. It will take several hours or days for all the dryer to cool down, however, the process can be expedited using cooling fans.

3. It is sometimes necessary to enter dryer for inspection, clean up or repairs. The inside of a dryer must be considered as a confined space environment.

4. Manholes must be properly maintained to eliminate sharp edges.

GL&V USA Inc.
27 Allen Street
Hudson Falls, NY 12839
518-747-2444 FAX: 518-747-1320

SAFETY PARTICULAR TO GAS FIRED PAPER DRYER

WARNING!!! Dryers must not be directly sprayed or washed with cold water. Such extreme thermal differences could crack the dryer shell or heads causing catastrophic failure.

GL&V USA Inc.
27 Allen Street
Hudson Falls, NY 12839
518-747-2444 FAX: 518-747-1320

UNPACKING AND STORAGE

GL&V PREPARATION FOR SHIPMENT

Equipment provided by GL&V is pre-assembled prior to shipment. Our sales proposal will indicate the amount of pre-assembly completed. The gas fired paper dryer is assembled complete.

For shipping purposes, some machine sections must be disassembled.

Prior to disassembly the frames are match marked.

The disassembled machine sections are boxed, crated, bundled, shipped loose, or mounted on skids for shipment.

As much as possible, a component machine section is normally packaged together, even though it has been broken down for shipping.

Loose items, such as columns, cross ties and modular framing subsections etc. are generally non-packaged items.

GL&V USA Inc.
27 Allen Street
Hudson Falls, NY 12839
518-747-2444 FAX: 518-747-1320

RECEIVING

The method of receiving and storing equipment from arrival to installation can expedite or retard the orderly progression of installation. Store all equipment in a protected and controlled area that can be secured to prevent access by unauthorized people.

As each shipment arrives, carefully inspect it for damage that may have occurred during transit. Of particular importance for inspection are instrument panels and consoles. Internal inspection of these cabinets is required. Dismantling of the shipping container is necessary to accomplish this, but it is imperative that protection of the cabinets be provided immediately after the conclusion of the inspection. If damage has occurred, report it immediately to the carrier and advise GL&V. Please refer to the information on the manifest when reporting missing or damaged equipment.

After checking the shipment against the manifest, move the equipment to the storage area. We suggest that the storage area be sectioned off and a record made where each piece of equipment is placed. This will provide efficient retrieval of desired parts. A responsible clerk should supervise records and sign out parts received, and parts sent to immediate job site for permanent assembly.

The containers are carefully made to facilitate moving by crane and/or fork truck.

When receiving dryers, they should be carefully checked for damage during shipping. If any damage is found, immediately alert GL&V and the carrier.

GL&V dryers are normally covered with a coating to protect against corrosion and then paper wrapped and skidded for shipment. The protective coating for normal storage is a combustible liquid called Rust Veto 342. For long-term storage, Rust Veto 344 protective coating is used. This coating is similar to Rust Veto 342 except that it is darker and thicker. For technical information and other data on this protective coating refer to the Manufacturers Safety Data Sheets that are included in this manual.

To remove these coatings use TURPENTINE OR KEROSENE.

GL&V USA Inc.
27 Allen Street
Hudson Falls, NY 12839
518-747-2444 FAX: 518-747-1320

Chrome plated, chrome/teflon or Teflon coated dryers need special packaging to protect the expensive coatings. Therefore, these dryers come with an extra layer of wood slats around the entire face of the shell. Also, the dryers come on special skids, which attach to the journals only.

All other machined surfaces are coated with a rust inhibitor that is easily removed, at installation, with a solvent that is approved for use by the installation site supervisory personnel.

HANDLING OF DRYERS

A label showing the correct and incorrect finished dryer handling is included on the dryer paper wrapping. It is also shown below.

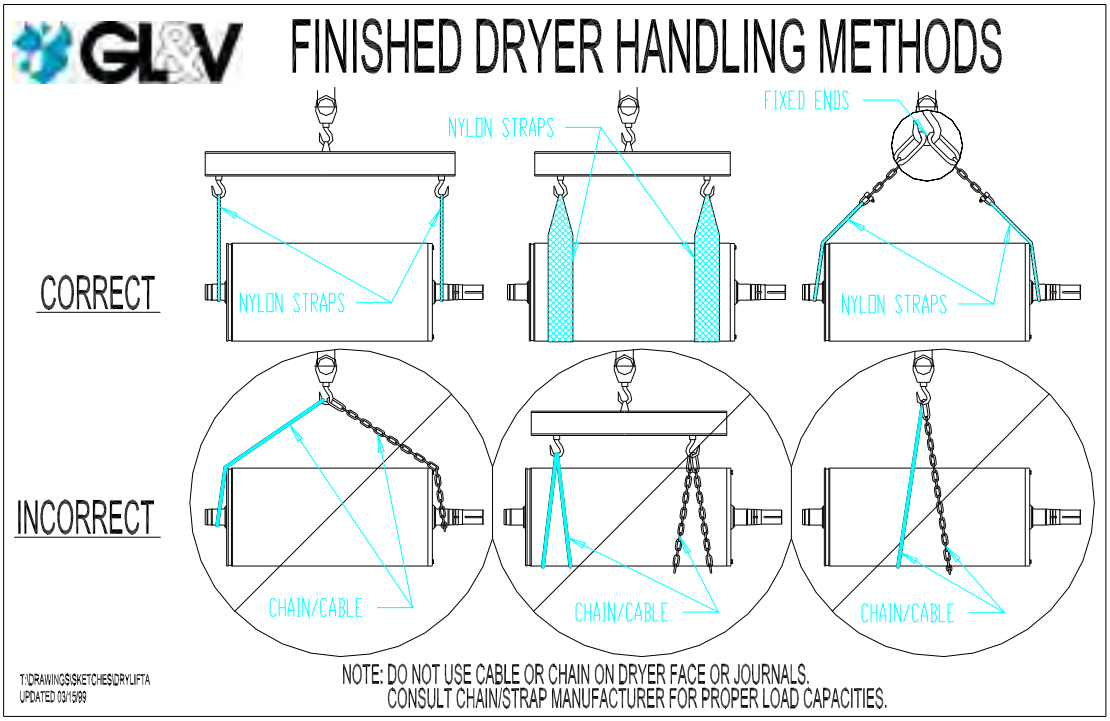

Finished Dryer Handling Methods

Never use any lifting method that could damage the finished face or journals of the dryer. The preferred method of lifting is with an overhead crane. A fork truck can be used as long as the proper handling methods are observed.

GL&V USA Inc.
27 Allen Street
Hudson Falls, NY 12839
518-747-2444 FAX: 518-747-1320

UNPACKING

As a piece of equipment is needed, move it to the job site before unpacking. If small or individual pieces are needed, remove them from their container, leaving the others in the protective container.

Carefully disassemble the container, removing all outside pieces. Inspect how the components were secured to the bottom part of the container.

Remove hold down bands and bolts. CAUTION: Some components are supported and may move when their respective hold down ties are released. Use extra caution around these items. After all of the tie downs have been removed, move the component to its prescribed position.

LONG TERM STORAGE

In the event that you must store the equipment in excess of 30 days, we offer the following as a guide for its protection until such time as installation commences. Generally, inside storage is the best, but outside storage can be accomplished by building a weatherproof shelter.

Dryers	The recommended storage area for dryers is a dry, low humidity, dust-free storage room. The wooden skid used for transportation can be used for storage purposes as well. If dryers have to be stored outside, take paper wrapping off the dryers to prevent creation of water pockets between paper and dryer shell. Add protective coating material to all surfaces that can have contact with water. Occasionally check surfaces for possible scratches and/or spots on the protective coating and re-coat if needed.
Hydraulic Systems	Fill system with a rust inhibited oil. Circulate oil through the system and seal.
Unpainted Ferrous Surfaces	Coat with Cosmoline or equal.
Openings	Seal with Cosmoline-saturated paper or equal. Use, when appropriate, plastic pipe plugs or caps.

GL&V USA Inc.
27 Allen Street
Hudson Falls, NY 12839
518-747-2444 FAX: 518-747-1320

Couplings	Pack with grease and coat outside with Cosmoline or equal.
Exposed Threads	Coat with FELPRO C5A or equal.
Machine Assemblies	Insure adequate support under all machine bases.
Instruments	Remove from machine, tag instrument and location. Seal openings on machine and pack instruments in a crate with a desiccant.
Control Panels	Remove any plastic airtight coverings that were used for shipping. DO NOT STORE OUTSIDE. Tighten all terminals. Seal all openings with a desiccant inside. Check desiccant monthly.

At the conclusion of the storage period, equipment may be cleaned and installed during the normal installation program. Bearings that were grease packed for storage should have their drain plug removed, where provided, and the bearing purged with new lubricant. You may also leave the plug removed during the first few hours of operation to insure complete purging and to relieve any excess grease that may have been put in. Flush protective oils from all lines, drain gear reducers, and refill.

GL&V USA Inc.
27 Allen Street
Hudson Falls, NY 12839
518-747-2444 FAX: 518-747-1320

SITE PREPARATION AND INSTALLATION OF SOLEPLATES

(THIS SECTION IS PROVIDED FOR REFERENCE ONLY
NO SOLE PLATES ARE PROVIDED)

1. GL&V can assume no responsibility for the type of site construction and/or preparation required for the installation of the machinery.

2. Points of hold down and typical anchoring methods are provided in this section.

3. Live load design for the dryer section should be based on 150% of the dead load.

4. All anchor bolts, washers, nuts, and pipe sleeves to be furnished complete by customer. Competent engineers should do foundation and anchor bolt design.

5. All anchor bolts are suggested to be 1-inch diameter and the threaded portion should project 1-inch minimum above sole plate. The threaded portion of the anchor bolt should be approximately five inches long.

6. Dimensional information shown on the following diagrams represents requirements above rough concrete elevation. Ideally, the bottom of each soleplate should be located approximately two inches above the rough supporting concrete.

7. Three brass plugs in the operating floor ideally establish the centerline of the paper machine. A plug should be located at each extreme end of the machine and the third plug at the approximate center of the machine. Elevation control is ideally maintained by establishing “bench plates” to +/- 0.000” intermittently along the length of the machine.

GL&V USA Inc.
27 Allen Street
Hudson Falls, NY 12839
518-747-2444 FAX: 518-747-1320

SOLE PLATE INFORMATION

Foundation plate dimensional information is shown below. For specific dimensional information about this machine see elevation drawings.

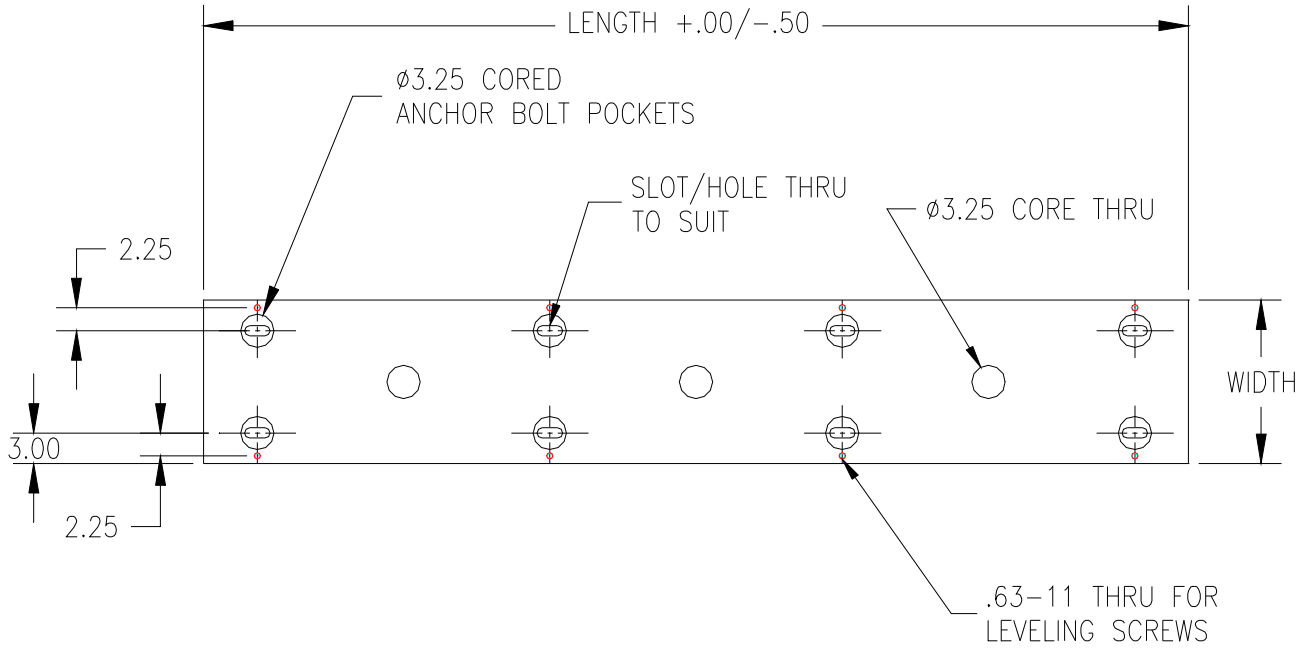

GL&V USA Inc.
27 Allen Street
Hudson Falls, NY 12839
518-747-2444 FAX: 518-747-1320

TYPICAL SOLE PLATE CROSS SECTION

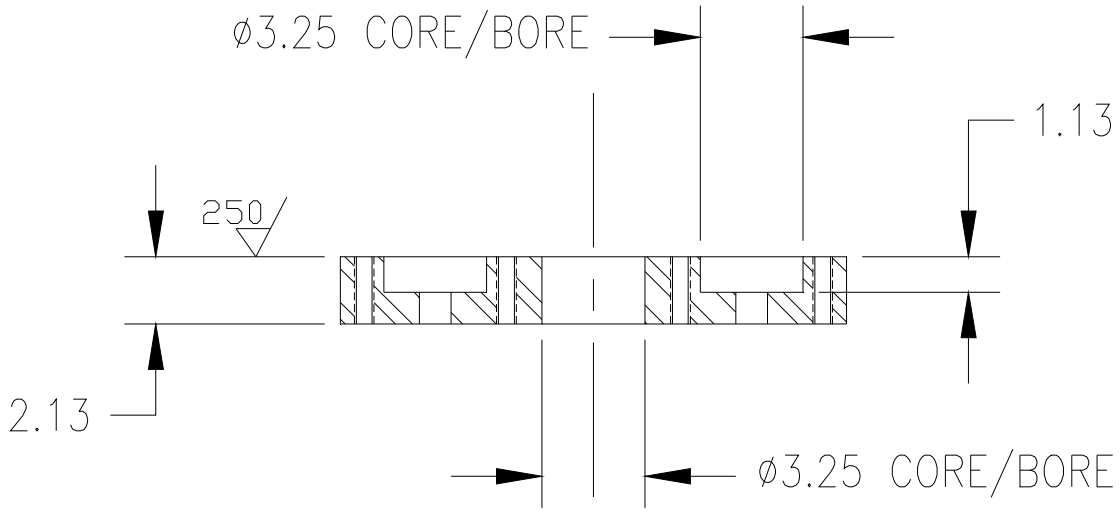

GL&V USA Inc.
27 Allen Street
Hudson Falls, NY 12839
518-747-2444 FAX: 518-747-1320

FOUNDATION CONSIDERATIONS

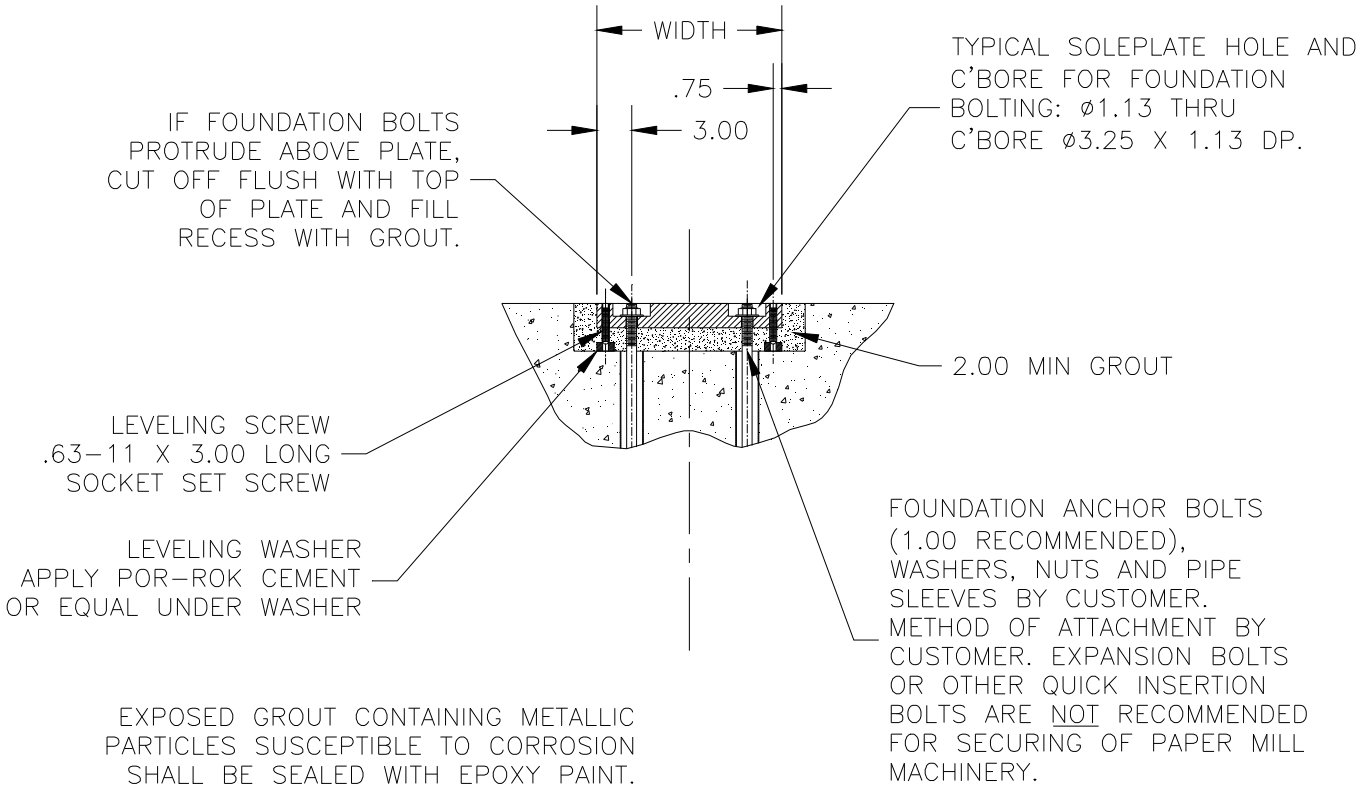

GL&V USA Inc.
27 Allen Street
Hudson Falls, NY 12839
518-747-2444 FAX: 518-747-1320

INSTALLATION OF SOLEPLATES

These tolerances are to establish general guidelines for those involved in scheduling and executing the installation of the machine. The customer's installation contractor and/or agents are responsible for maintaining actual tolerances during the installation of this machine.

All grout design and placement of grout is the responsibility of the customer. GL&V has no authority to specify or recommend grout mix or add-mixes. Deviations from standard grouting practice, such as hollows, could result in structural failure. The above remarks apply particularly to repair/reinstallation/replacement of existing plates, which are to be overlaid by another row of plates.

SETTING SOLEPLATES

The sole plates can now be placed over the anchor bolts as called for on the drawing and held in place with a nut and washer.

The first sole plate installed must be located from the original building center and square lines, also sole plates must be located with proper clearance between sole plates as shown on GL&V typical foundation drawing, as measured from the finished surface. Plates can now be rough leveled and aligned throughout the entire machine.

GL&V USA Inc.
27 Allen Street
Hudson Falls, NY 12839
518-747-2444 FAX: 518-747-1320

SOLEPLATE TOLERANCES

Soleplate readings should be taken per the following sketch.

Target readings should be taken between A-B, C-D, E-F

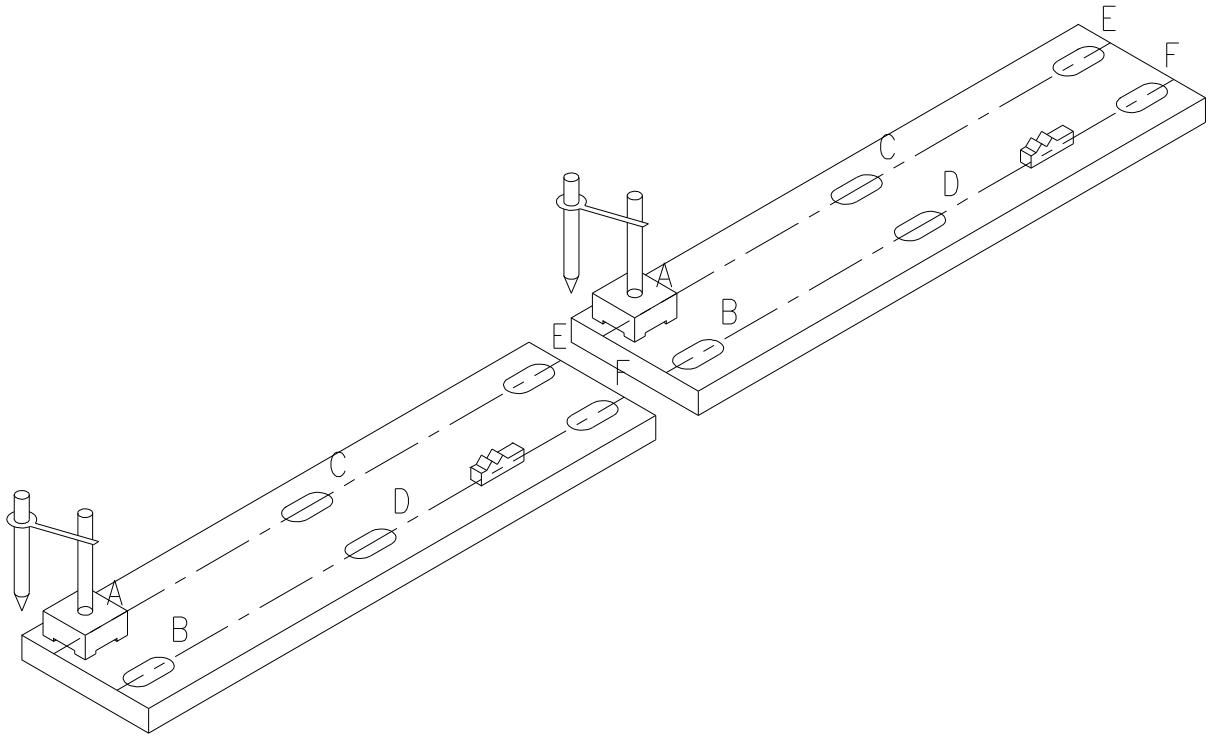

Level Readings should be taken along dotted lines

a) Sole plates must be level in the machine direction within 0.005 inches.
   1) A maximum deviation of 0.003 inches in any one foot of length and,
   2) A maximum accumulation of 0.020 inches per 100 feet and,
   3) A total maximum deviation from machine elevation of +/- 0.060 inches in any 100 feet of length.

b) A sole plate must be level in the cross machine direction within .0005 inches per 12 inches of sole plate width.

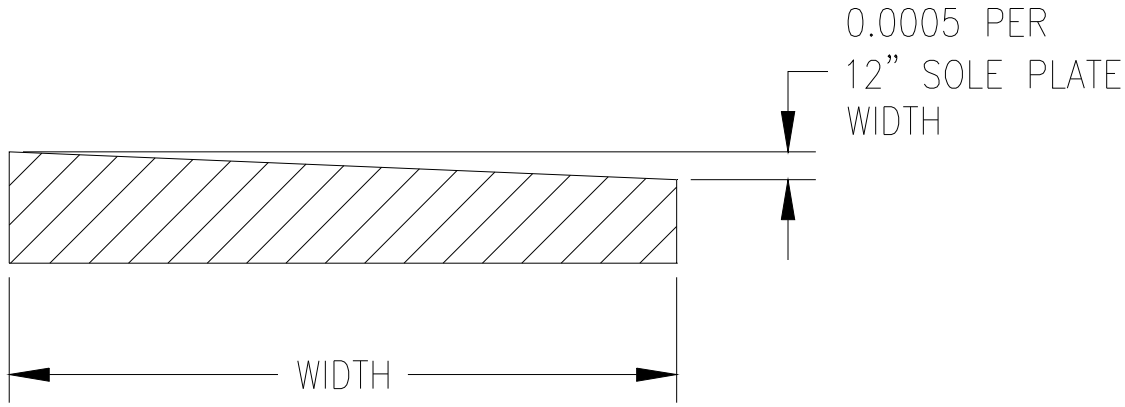

c) Front side and back side sole plates must be level or set to design elevation difference within 0.0005 inches per foot of machine width but not more than 0.009 inches maximum deviation. Machine width for this measurement is from outside of sole plates.

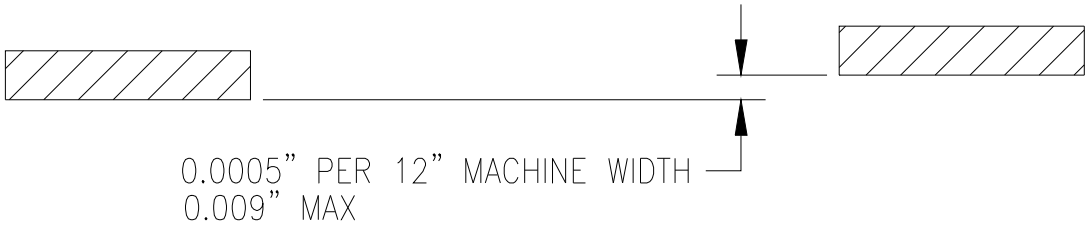

GL&V USA Inc.
27 Allen Street
Hudson Falls, NY 12839
518-747-2444 FAX: 518-747-1320

SOLEPLATE CENTER AND SQUARE LINE LAYOUT

A. Machine direction centerlines (on sole plates) should be accurate to and parallel with the machine centerlines and each other within 0.015 inches. If proper instrumentation is available, the checking of these centerlines can be done to much greater accuracy than that given above.

B. When such instrumentation is not available it will be necessary to check the square lines by trammel method. Extreme care must be exercised when checking square lines where the distance involved between sole plates preclude the use of a trammel. In this case, tape measurements must be used. It is suggested that as long a trammel as possible be used to swing two arcs equidistant and intersecting the centerline from the intersection of the square and the centerline, dimension “X” and “X”. Tape measurements can now be made from the intersection of the square line and centerline on the opposite sole plate (Point “CP) to the intersection of the two trammel arcs and the centerline (Points “A” and “B”). Where possible, the trammel length (X+X) should be equal to the distance between the centerlines making a 45-degree measurement. The difference between the two tape dimensions (AC and BC) should not exceed 1/64 inch.

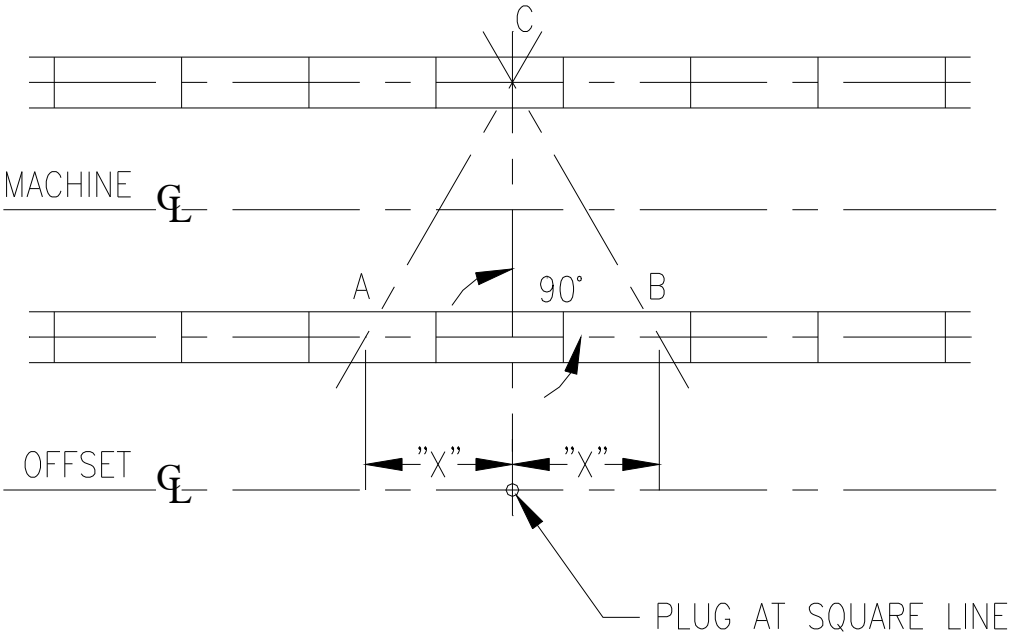

GL&V USA Inc.
27 Allen Street
Hudson Falls, NY 12839
518-747-2444 FAX: 518-747-1320

C. The diagonals (AB and CD, or DE and BF, etc.) must be equal within 1/64 inch. S

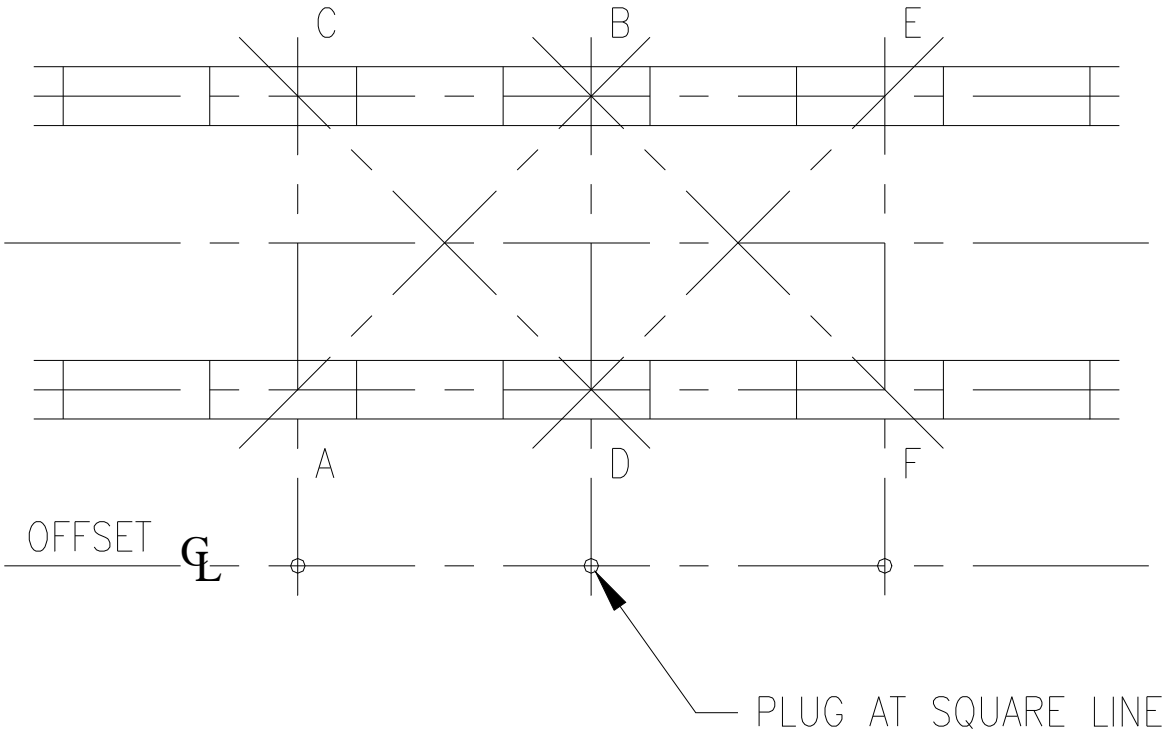

D. All center and square lines must be scribed and should be center punched on the sole plates every 2 to 3 feet. This method of punching should produce a lasting record for future machine alignment checks. It is strongly recommended that centerlines and reference points be identified by metal stampings and cross-referenced on the foundation drawing. This reduces the chance of error when having the quantity of reference points that are involved during installation.

Layout and checking of centerlines must be carried out accurately. If any appreciable discrepancies are allowed to accumulate, considerable problems will be encountered at a later date trying to bring sections of the machine back into alignment.

Original benchmarks, plugs for centerlines, cross machine centerlines and other original reference marks should be protected in a manner such that they will out live the machine. Future additions or changes of equipment will be more easily made if reference points are available.

GL&V USA Inc.
27 Allen Street
Hudson Falls, NY 12839
518-747-2444 FAX: 518-747-1320

Layout measurements should be made using the same steel tape on all measurements. Tape should be tensioned with the use of a spring scale to a load of 15 pounds on a 100-foot tape. The effect of extreme temperature will produce serious errors in measurements and it is necessary that this difference be compensated. Whenever possible, measurements should be made by rechecking previous days layout before starting your new layout. Optical equipment, when used, should be checked and verified daily by the engineer and/or technicians for calibration.

Record sole plate elevations and levels. Elevation readings should be taken at each pair of hold down bolts as well as cross plate elevations. The readings should be recorded on the machine foundation drawing, together with such information as type of instrument used, location of readings and date. Repeat procedure for both tending side and drive side.

GROUTING SOLEPLATES

The supporting concrete should be roughed up to remove fines and weak material in preparation for grouting of the soleplate. The foundation and the anchor bolt sleeves should be cleaned and free of all undesirable foreign materials before grouting.

When the soleplate is in the correct position and is ready to be leveled, the leveling washers should be fixed to the supporting concrete. Shims may be used under the leveling washers to build up height if needed. In this case, the shims must also be fixed to the supporting concrete. One-quarter inch of thread on the leveling screw should project through the soleplate for final adjustment. After the soleplate is leveled and washers are in position, tighten all anchor bolts. The leveling screws are for adjusting the soleplate only. Leveling screws should never be used alone for support during grouting. Recheck the soleplates carefully for final level and position.

A non-shrink grouting is recommended for grouting paper machine soleplates. Dry pack grout is not recommended. The handling and mixture of any non-shrink grout should follow the specific instructions of the manufacturer.

The form material used to contain the group should be strong enough to withstand the pressure of the grout. Allow six inches between the form and soleplate to work grout.

GL&V USA Inc.
27 Allen Street
Hudson Falls, NY 12839
518-747-2444 FAX: 518-747-1320

Saturate the foundation with water before grouting. Grout anchor bolts first. Use a wire to work the grout down into the anchor bolt sleeves. Place the grout as quickly and continuously as possible to prevent over working.

Paint exposed grout surfaces containing metallic particles with epoxy paint.

Allow grout to completely cure before continuing with installation.

After soleplates have been reinstalled/repaired as required then grouted and checked, all anchor bolts extending above the bottom sole plate layer must be cut off .12" below the top of the plate. Fill anchor pocket voids around anchor bolts with grout. Metalized epoxy can be substituted for grout when filling pockets. Excessive filler should be removed flush and smooth with the top of the sole plate.

GL&V USA Inc.
27 Allen Street
Hudson Falls, NY 12839
518-747-2444 FAX: 518-747-1320

DRYER FRAMING

The framework for this dryer system is designed to support the dryers and related equipment as shown on the elevation drawings. The framework is constructed of fabricated steel, The framework is designed specifically for this application, any alteration or modification to the framework should be first approved by GL&V.

DRYER FRAME INSTALLATION

The dryer frames must be installed correctly in proper alignment to ensure ease of installation of any accessory equipment that may attach to the dryer frames. This applies to any rolls in particular. Any misalignment may cause the dryer felts to track incorrectly. The alignment tolerances for dryer frames are given below:

1. Centerline of dryer frame to centerline of machine must be maintained to +/- 0.015 inches.

2. Horizontal machined surfaces must be level to +/- .001 inches per foot.

3. Elevation difference of matching machined frames from Tending Side to Drive Side must be held to +/- .010 inches.

GL&V USA Inc.
27 Allen Street
Hudson Falls, NY 12839
518-747-2444 FAX: 518-747-1320

Properly torque mounting hardware per the following table.

		Unlubricated			Plated			Lubricated		
Nominal Diameter (inches)	Threads per inch	Torque-SAE 2 (ft-lbs)	Torque-SAE 5 (ft-lbs)	Torque-SAE 8 (ft-lbs)	Torque-SAE 2 (ft-lbs)	Torque-SAE 5 (ft-lbs)	Torque-SAE 8 (ft-lbs)	Torque-SAE 2 (ft-lbs)	Torque-SAE 5 (ft-lbs)	Torque-SAE 8 (ft-lbs)
0.25	20	5	8	12	4	6	9	4	6	8
0.3125	18	11	17	25	8	13	18	8	12	17
0.375	16	20	31	44	15	23	33	14	22	31
0.4375	14	32	49	70	24	37	52	22	35	49
0.5	13	49	75	106	37	57	80	34	53	74
0.5625	12	70	109	154	53	82	115	49	76	107
0.625	11	97	150	212	73	113	159	68	105	148
0.75	10	172	266	376	129	200	282	121	186	263
0.875	9	167	430	606	125	322	455	117	301	424
1	8	250	644	909	187	483	682	175	451	636
1.125	7	354	794	1288	266	595	966	248	556	901
1.25	7	500	1120	1817	375	840	1363	350	784	1272
1.375	6	655	1469	2382	491	1102	1787	459	1028	1668
1.5	6	869	1949	3161	652	1462	2371	609	1365	2213

Note: Lubricated torque values are for SAE 20-SAE 40 oil and can vary greatly depending on the actual lubrication.

OPERATION AND MAINTENANCE SAFETY CONSIDERATIONS

Dryer sections are constructed of numerous parts and sub-components. This equipment is automatic and has various nip points. **KEEP ALL BODY PARTS CLEAR OF THE DRYER SECTION UNLESS THE SYSTEM HAS BEEN PROPERLY LOCKED OUT. DO NOT WEAR LOOSE CLOTHING AROUND THE DRYER SECTION.**

The gas fired paper dryer is designed to work at high temperatures. **SEVERE BURNS CAN RESULT FROM CONTACT WITH THE GAS FIRED PAPER DRYER AND ANY NEARBY EQUIPMENT.**

GL&V USA Inc.
27 Allen Street
Hudson Falls, NY 12839
518-747-2444 FAX: 518-747-1320

OPERATION AND MAINTENANCE CONSIDERATIONS

The framework is provided primed and finish painted. Periodic cleaning and painting will help reduce corrosion.

All hardware should be tight. Periodically check bolts and other threaded fasteners for the correct torque.

GL&V USA Inc.
27 Allen Street
Hudson Falls, NY 12839
518-747-2444 FAX: 518-747-1320

INSTALLATION AND OPERATION OF THE GAS FIRED PAPER DRYER

PREPARATION PRIOR TO MOUNTING BEARINGS

Just before the bearings are to be mounted, remove the protective wrappings.

Large bearings with a thick, greasy, rust preventive coating and bearings that are to be grease or oil lubricated must be washed and dried to remove the protective coatings. The thick, greasy coating on the large bearings will prevent proper bearing mounting and checking of internal radial clearances.

All sizes of bearings using grease lubrication should have the protective coating removed if the bearing is used at very high or very low temperatures since some of the coatings can adversely affect the lubricating properties of the grease used for such extremes of temperature.

On circulating oil lubricated bearings, they should be cleaned with flushing oil to remove and carry off the bearing protective coatings to the oil system's reservoir for filtering and draining prior to the machine's sustained operation.

Before mounting the bearings, check the dimensions of the bearings, the mating shafts and the housings.

Shaft and bearing housing surfaces must be free of dirt, dust, burrs, etc. Clean and/or repair these surfaces before mounting the bearings. Apply a coat of light oil to the bearing journal fit and to the bearing bore.

CYLINDRICAL BORE BEARING MOUNTING

Mount the bearings in a clean, dust-free room.

WARNING!!!
Do not subject the bearings to direct hammer blows when mounting.

Cylindrical bore bearings with light interference fits may be pressed cold onto shafts or into bearing housings.

GL&V USA Inc.
27 Allen Street
Hudson Falls, NY 12839
518-747-2444 FAX: 518-747-1320

Cylindrical bore bearings with heavy interference fits require that either the bearing or the bearing housing be heated. If the interference fit is on the shaft, the bearing must be heated. To heat the bearing, use induction heating coils or oil baths - **do not use direct flames and do not heat the bearings beyond 125° C (257° F).** Heating beyond this temperature may change the metal properties and dimensions of the bearings.

Bearings with interference fits in the housings require that the housings be heated. **Do not heat using direct flames.** Heater oil baths are a good way to heat the housings. See manufacturer's catalog for recommended procedures.

TAPERED BORE (1:12) BEARING mounting

Mount the bearings in a clean, dust-free room.

These instructions apply to CK, CCK, CACK and CAK design bearings.

Tapered bore bearings require a relatively tight interference fit between inner rings and shafts. The interference fit expands the inner rings, thereby reducing the internal clearance of the bearings. The reduction of the internal clearance is measured using feeler gauges. Internal clearance is measured before and during drive-up.

With bearing standing on a level surface, use feeler gauges in between the upper most vertical roller and the outer race of the bearing as follows:

1. Move a feeler gauge carefully in between the upper most vertical unloaded roller and the outer race with a sawing motion. Do not force the gauge. Do not rotate bearings while measuring. Repeat the procedure until a gauge is found that will barely pass through.

2. Repeat this procedure for the upper most vertical unloaded roller of the other row and use the average value.

3. Make note of this bench clearance.

4. After measuring the internal clearance, drive bearing up on taper in easy stages until the above noted initial clearance has been reduced by the amount “R” given in the Table 1 for inches or Table 2 for millimeters for the size of bearing being

GL&V USA Inc.
27 Allen Street
Hudson Falls, NY 12839
518-747-2444 FAX: 518-747-1320

installed. Note: Minimum permissible final clearance “S” should not be less than that shown in Table 1 or Table 2. This measurement is now taken at the bottom of the bearing since the bearing is now hanging on the dryer journal.

GL&V USA Inc.
27 Allen Street
Hudson Falls, NY 12839
518-747-2444 FAX: 518-747-1320

BORE DIAMETER d(mm)		TABLE "R" Reduction in Radial Internal Clearance INCHES	TABLE "S" Minimum Permissible Final Clearance in Inches after Mounting Bearings with Clearance			
OVER	Incl.	Min. - Max.	Normal	C3	C4	C5
50	65	0.0012 - 0.0015	0.0010	0.0014	0.0025	0.0031
65	80	0.0015 - 0.0020	0.0010	0.0016	0.0030	0.0039
80	100	0.0020 - 0.0025	0.0014	0.0020	0.0030	0.0047
100	120	0.0020 - 0.0028	0.0020	0.0025	0.0040	0.0059
120	140	0.0025 - 0.0035	0.0022	0.0030	0.0045	0.0067
140	160	0.0030 - 0.0040	0.0022	0.0035	0.0050	0.0079
160	180	0.0030 - 0.0045	0.0024	0.0040	0.0060	0.0091
180	200	0.0035 - 0.0050	0.0028	0.0040	0.0065	0.0094
200	225	0.0040 - 0.0055	0.0030	0.0045	0.0070	0.0106
225	250	0.0045 - 0.0060	0.0035	0.0050	0.0080	0.0118
250	280	0.0045 - 0.0065	0.0040	0.0055	0.0085	0.0126
280	315	0.0050 - 0.0075	0.0043	0.0060	0.0095	0.0138
315	355	0.0060 - 0.0085	0.0047	0.0065	0.0100	0.0150
355	400	0.0065 - 0.0090	0.0050	0.0075	0.0115	0.0165
400	450	0.0080 - 0.0105	0.0050	0.0080	0.0120	0.0181
450	500	0.0085 - 0.0110	0.0065	0.0090	0.0135	0.0201
500	560	0.0095 - 0.0125	0.0067	0.0100	0.0140	0.0217
560	630	0.0100 - 0.0135	0.0080	0.0115	0.0160	0.0248
630	710	0.0120 - 0.0155	0.0082	0.0120	0.0175	0.0272
710	800	0.0135 - 0.0175	0.0090	0.0135	0.0200	0.0303
800	900	0.0145 - 0.0195	0.0105	0.0150	0.0225	0.0343
900	1000	0.0160 - 0.0215	0.0120	0.0170	0.0250	0.0382

Table 1
Tapered Bore Bearing Drive - Up Specifications (Inches)

NOTE:

For bearings with normal clearance, the reduction should be within the lower half of the clearance reduction range for bearings with clearance greater than normal, e.g., C3 (C3 being etched as a suffix to the bearing no.), the clearance reduction should be within the top half of the range. Example: bearing 23152 CCK, 260 mm bore, clearance reduction: 0.0045-0.0055 inches, bearing 23151 CCK/C3, 260 mm bore, clearance reduction: 0.0055-0.0065 inches. Precision type bearings marked with suffix "W4" (calenders, breaker stacks) have the high point of eccentricity marked on the inner race and correspondingly the low points of eccentricity are marked on the roll journals in relation to the roll outside diameter. When mounting the bearings, the high point on inner race and low point on the journal have to be lined up to reduce the overall eccentricity.

GL&V USA Inc.
27 Allen Street
Hudson Falls, NY 12839
518-747-2444 FAX: 518-747-1320

BORE DIAMETER d(mm)		TABLE "R" Reduction in Radial Internal Clearance Millimeters	TABLE "S" Minimum Permissible Final Clearance in Millimeters after Mounting Bearings with Clearance			
OVER	Incl.	Min. - Max.	Normal	C3	C4	C5
50	65	0.030 - 0.040	0.025	0.035	0.055	0.080
65	80	0.040 - 0.050	0.025	0.040	0.070	0.100
80	100	0.045 - 0.060	0.035	0.050	0.080	0.120
100	120	0.050 - 0.070	0.050	0.065	0.100	0.150
120	140	0.065 - 0.090	0.055	0.080	0.110	0.170
140	160	0.075 - 0.100	0.055	0.090	0.130	0.200
160	180	0.080 - 0.110	0.060	0.100	0.150	0.230
180	200	0.090 - 0.130	0.070	0.100	0.160	0.240
200	225	0.100 - 0.140	0.080	0.120	0.180	0.270
225	250	0.110 - 0.150	0.090	0.130	0.200	0.300
250	280	0.120 - 0.170	0.100	0.140	0.220	0.320
280	315	0.130 - 0.190	0.110	0.150	0.240	0.350
315	355	0.150 - 0.210	0.120	0.170	0.260	0.380
355	400	0.170 - 0.230	0.130	0.190	0.290	0.420
400	450	0.200 - 0.260	0.130	0.200	0.310	0.460
450	500	0.210 - 0.280	0.160	0.230	0.350	0.510
500	560	0.240 - 0.320	0.170	0.250	0.360	0.550
560	630	0.260 - 0.350	0.200	0.290	0.410	0.630
630	710	0.300 - 0.400	0.210	0.310	0.450	0.690
710	800	0.340 - 0.450	0.230	0.350	0.510	0.770
800	900	0.370 - 0.500	0.270	0.390	0.570	0.870
900	1000	0.410 - 0.550	0.300	0.430	0.640	0.970

Table 2
Tapered Bore Bearing Drive - Up Specifications (Millimeters)

NOTE:

For bearings with normal clearance, the reduction should be within the lower half of the clearance reduction range for bearings with clearance greater than normal, e.g., C3 (C3 being etched as a suffix to the bearing no.), the clearance reduction should be within the top half of the range. Example: bearing 23152 CCK, 260 mm bore, clearance reduction: 0.120-0.145 mm; bearing 23152 CCK/C3, 260 mm bore, clearance reduction: 0.145-0.170 mm. Precision type bearings marked with suffix "W4" (calenders, breaker stacks) have the high point of eccentricity marked on the inner race and correspondingly the low points of eccentricity are marked on the roll journals in relation to the roll outside diameter. When mounting the bearings, the high point on inner race and low point on the journal have to be lined up to reduce the overall eccentricity.

GL&V USA Inc.
27 Allen Street
Hudson Falls, NY 12839
518-747-2444 FAX: 518-747-1320

CYLINDRICAL BORE BEARING REMOVAL

If the bearing is to be reused after removal, do not apply any removal force through the rolling elements of the bearing.

Cylindrical bearings require the use of a bearing puller in order to remove the bearings. The puller pulls against the bearing ring having an interference fit. For an interference fit on a shaft, the pull must be applied to the inner ring of the bearing. For an interference fit in a bearing housing, the pull must be applied against the outer ring of the bearing. Heating of the bearing or the bearing housing may also be necessary when dismounting the bearing.

TAPERED BORE BEARING REMOVAL

Tapered bore bearings are removed with the use of pressurized oil. The oil is pumped through a hole to a groove in the tapered portion of the shaft under the bearing. Oil is pumped into the groove until its pressure becomes high enough to push the bearing off the taper of the shaft.

Prior to applying the pressure, slacken, but do not remove, the bearing locking ring or locknut.

If the locking ring or locknut is removed before pressure is applied, a danger exists that the bearing can dismount too quickly and fall off the journal. This may cause damage to the bearing and/or the locknut threads and/or the shaft.

GL&V USA Inc.
27 Allen Street
Hudson Falls, NY 12839
518-747-2444 FAX: 518-747-1320

Typical grooving and drilling of the shaft to provide this feature is illustrated below.

NOTE: Use of grease is not recommended. It hardens and blocks the passages rendering the hydraulic removal feature useless for future applications. However, at times, grease is either the only hydraulic medium available or the only one, which will be effective. Care should be taken to clean the passages in the journal after its use.

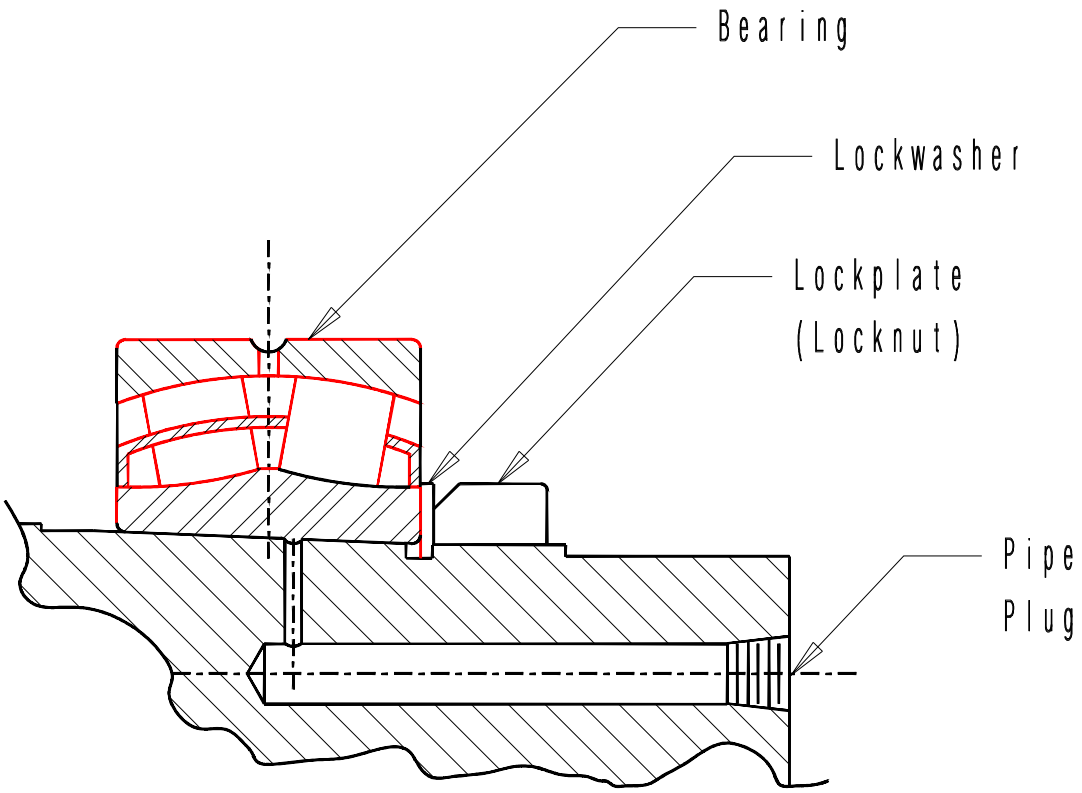

Instructions: Remove pipe plug and with lockplate (or locknut) loosened but still in place, attach hydraulic hose and pump. Use SAE #10 to #40 oil; DO NOT USE GREASE.

GL&V USA Inc.
27 Allen Street
Hudson Falls, NY 12839
518-747-2444 FAX: 518-747-1320

DRYER INSTALLATION

Place gas fired paper dryer with bearings mounted into position on dryer section framing. Ensure that the tending side bearing housing is installed to allow for proper thermal expansion when the dryer is heated. Loosely bolt bearing housings to framing so that dryer can be aligned. Install stainless steel taper pins (not provided by GL&V) after alignment.

ALIGNMENT

Align dryer so that it is level and perpendicular to machine.

Level to ±.005" cross machine
Square to ±.005".

MISCELLANEOUS HARDWARE TORQUE

Tighten bearing housing mounting bolts to proper torque. See the following table for proper torque of various material bolts. Use these specifications for dryer associated fasteners only.

		Unlubricated			Plated			Lubricated		
Nominal Diameter (inches)	Threads per inch	Torque-SAE 2 (ft-lbs)	Torque-SAE 5 (ft-lbs)	Torque-SAE 8 (ft-lbs)	Torque-SAE 2 (ft-lbs)	Torque-SAE 5 (ft-lbs)	Torque-SAE 8 (ft-lbs)	Torque-SAE 2 (ft-lbs)	Torque-SAE 5 (ft-lbs)	Torque-SAE 8 (ft-lbs)
0.25	20	5	8	12	4	6	9	4	6	8
0.3125	18	11	17	25	8	13	18	8	12	17
0.375	16	20	31	44	15	23	33	14	22	31
0.4375	14	32	49	70	24	37	52	22	35	49
0.5	13	49	75	106	37	57	80	34	53	74
0.5625	12	70	109	154	53	82	115	49	76	107
0.625	11	97	150	212	73	113	159	68	105	148
0.75	10	172	266	376	129	200	282	121	186	263
0.875	9	167	430	606	125	322	455	117	301	424
1	8	250	644	909	187	483	682	175	451	636
1.125	7	354	794	1288	266	595	966	248	556	901
1.25	7	500	1120	1817	375	840	1363	350	784	1272
1.375	6	655	1469	2382	491	1102	1787	459	1028	1668
1.5	6	869	1949	3161	652	1462	2371	609	1365	2213

Note: Lubricated torque values are for SAE 20-SAE 40 oil and can vary greatly depending on the actual lubrication.

GL&V USA Inc.
27 Allen Street
Hudson Falls, NY 12839
518-747-2444 FAX: 518-747-1320

DRYER HEAD BOLTS

Never re-torque dryer head bolts. If broken bolts are found, they need to be replaced immediately. Tighten replaced dryer head bolts per the following table:

Bolt - diameter (inches)	Recommended Torque (foot-pounds)
3/4	175-225
7/8	300-350
1	550-650
1-1/8	600-700
1-1/4	700-800

HANDHOLE/MANHOLE COVERS

Handhole/manhole cover bolts should be re-torqued after applying heat to the dryers if the covers have been removed for dryer servicing. Bring the dryers up to operating temperature then remove steam pressure. Torque the handhole/manhole bolts to 200-250 ft-lbs and continue with warm-up procedure.

GL&V USA Inc.
27 Allen Street
Hudson Falls, NY 12839
518-747-2444 FAX: 518-747-1320

BEARING LUBRICATION, CIRCULATING OIL SYSTEM
(THIS SECTION IS FOR REFERENCE ONLY, THERE IS NO SUPPLIED LUBE SYSTEM WITH THE GAS FIRED PAPER DRYER)

Connect supply and discharge piping as per oil system specifications. Adjust flow meters for proper oil quantity based on the bearing size and steam pressure.

Improper sizing and installation of piping can result in bearing failure, oil leakage, seal failure or additional drive requirements.

BEARING LUBRICATION, GREASE

Grease lubrication is not normally recommended on new dryer installations operating at high temperatures. For this application, Krytox XHT-AC shall be used for the grease.

GUARDING INSTALLATION

Install guarding and warning signs in accordance with OSHA Safety Standards to protect operators and equipment.

WARNING: Failure to comply with OSHA requirements could result in injury to personnel, damage to equipment or fines for non-compliance.

GL&V USA Inc.
27 Allen Street
Hudson Falls, NY 12839
518-747-2444 FAX: 518-747-1320

GAS FIRED PAPER DRYER OPERATION

The gas fired paper dryer cylinder supplied is a mild steel cylinder that is designed to be used as an instrument to simulate the drying of paper along a dryer section. The dryer cylinder, or dryer, use the latent heat of the gas flame to dry material that is fed upon the outside surface of the cylinder.

The dimensional information and maximum operating temperature of the paper drying cylinders provided with this equipment is listed in the machine data section of this manual.

Both the front and rear journal of each drying cylinder are drilled and suitably grooved to enable the installation of tapered bore, spherical roller bearings. The journals are also machined to supply and exhaust the gaseous mixture. See the Dryer Assembly drawing for specific dimensional details.

OPERATING SAFETY CONSIDERATIONS

Dryer cylinders are a component of automatic equipment that has various nip points. **KEEP ALL BODY PARTS CLEAR OF THE DRYER SECTION UNLESS THE SYSTEM HAS BEEN PROPERLY LOCKED OUT. DO NOT WEAR LOOSE CLOTHING AROUND THE DRYER SECTION.**

Dryer cylinders are designed to work at high temperatures. **SEVERE BURNS CAN RESULT FROM CONTACT WITH HEATED DRYER CYLINDERS AND NEARBY EQUIPMENT.**

GL&V USA Inc.
27 Allen Street
Hudson Falls, NY 12839
518-747-2444 FAX: 518-747-1320

Special safety considerations:

1. Dryer cylinders are very hot even several hours after shutdown. Personnel should use caution when operating around the dryer section at all times.
2. Never spray cool or cold water on any hot dryer other than that of the shower.
3. Never run the burner without the water shower being turned on.

Safety equipment: Personnel should wear hard hats, safety glasses, and leather gloves when working around the dryer section.

GL&V USA Inc.
27 Allen Street
Hudson Falls, NY 12839
518-747-2444 FAX: 518-747-1320

Appendix E: Combustion Controls Manual (Flynn Burner Corporation

DRUM DRYER

TABLE OF CONTENTS:

SPECIFICATIONS 1

PRODUCT INSTALLATION 3
- OVERVIEW 3
- GAS, and AIR PIPING 4
- ELECTRICAL CONNECTIONS 4

SYSTEM COMPONENT OVERVIEW 5
- BURNER 5
- PIPING FRAME ASSEMBLY 6
- CONTROL CABINET ASSEMBLY 9
- EXTERNAL SYSTEM COMPONENTS 11

SYSTEM OPERATION 12

ALARM OVERVIEW 23

MAINTENANCE 26

SPARE PARTS 27

CUSTOMER DRAWINGS 29

SPECIFICATIONS:

Electrical specifications to conform to USA Standards.
Piping specifications to conform to NFPA 86 Standards.

GENERAL

Type of system:	Drum Heater

ELECTRICAL

Control system:	Compact-Logix 1769 A-B PanelView +700
Power:	230V/3PH/60HZ
Control Voltage:	120/1/60

MECHANICAL

Type of burner:	Flynn Series HC-511, 108″ FS #026104
Type of ribbon:	3 Slot Ribbon
Burner Max Output Capacity:	15,000 BTU per inch – 1,500,000 BTU total
Burner deckels:	NONE
Type of ignition:	Electrode Rod
Type of sensing:	Sensing Rod
Combustion air blower size:	DR757
Exhaust fan size:	NA
Inlet gas pressure:	1 PSIG MAX
Compressed air pressure:	80 – 100 PSI

FLYNN BURNER CUSTOMER DRAWING LIST:

LINE AND WIRING	08-3433-00-05 (sheets 1 - 6)
MAIN PANEL ASSEMBLY	08-3433-06
MAIN PANEL ASSEMBLY	08-3433-10
2 BURNER PRETREATER AIR/GAS PIPING	08-3433-13
HC511-108″ FS (3) SLOT MULTPLE BOTTOM CENTER INLETS	08-3433-18

I. PRODUCT INSTALLATION

OVERVIEW:

Verify that all components supplied by Flynn Burner and by Customer are available at the installation site. Utility drops and the physical installation of the combustion system components are the responsibility of the customer and should be ready for proper installation and start-up.

The utilities include the following:
1. Gas supply line of the proper size, flow and pressure.

*If the gas supply also supplies other equipment in the plant, it must be sized and run in such a way as to not cause pressure fluctuations to the Flynn combustion system as the other equipment is cycled on and off.

2. Electrical supply of proper voltage and amperage.
See Line drawing #08-3433-02

5. Exhaust ducting
All Plumbing connections should be made according to local plumbing codes and consist of the following:

Plumbing the natural gas supply to the piping cabinet.
Plumbing the air / gas mixture line from the piping cabinet to the burner.
Plumbing of loose items which include;
Flexible metal hoses for burner feed.

All electrical connections should be made according to local electrical codes and consist of the following:

Main three phase power feed to the electrical enclosure located at the piping cabinet.
Power and control signals between the operator console and piping cabinet enclosure.
Power and control signals to the exhaust fan and exhaust flow switch.
PLC communication to existing control system.

The customer is responsible for the installation of the exhaust system.
Exhaust ducting will be required to the exhaust fan, and from the exhaust fan to the roof.

GAS SUPPLY

At a minimum the natural gas supply to the system must be the same pipe size as the main ball valve. If long pipe runs or multiple fittings are needed, then the appropriate pipe diameters should be used in order to allow proper gas supply.

The gas requirements are as follows:

Pressure:	2-7 PSIG
Max volume:	1000 Natural Gas

The pressure entering the system must never exceed seven (7) PSI. If the gas supply is greater than 7 PSI, a pressure reducing regulator must be installed in the gas line before the unit. This regulator, if not supplied with the unit, must be sized properly for the gas consumption of the system.

MIXTURE PIPING

The piping cabinet should be located as close to the burner as reasonably possible. The maximum piping length including fittings should not exceed 50 feet.

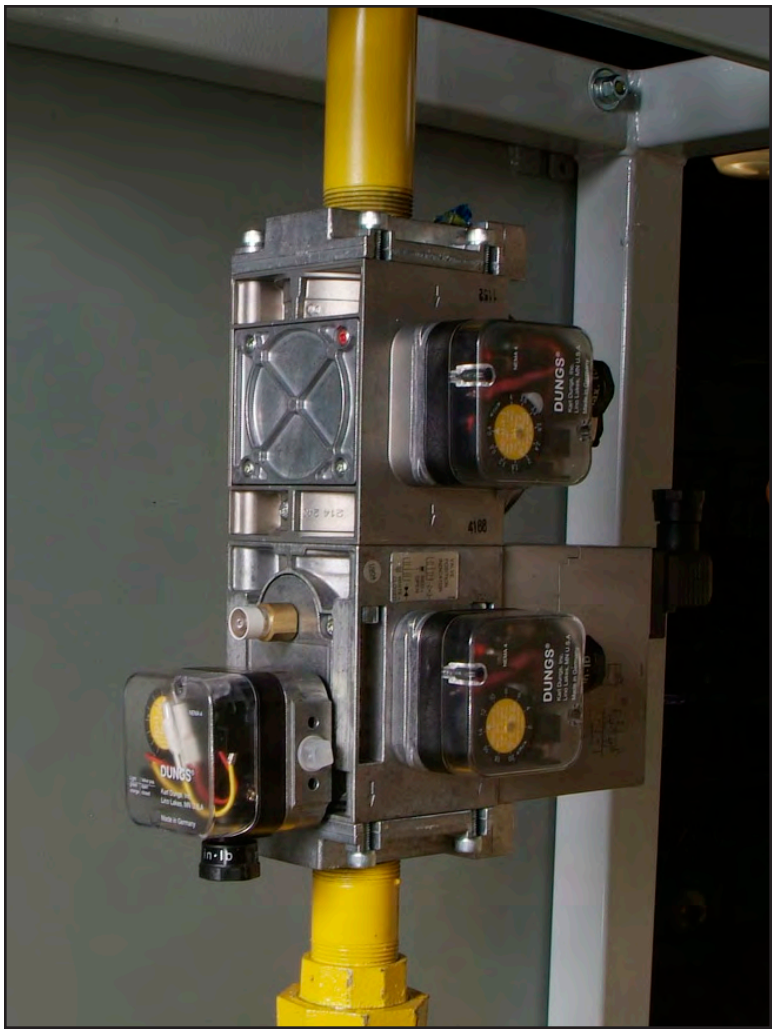

FIG. 1 Main Gas Valve Assembly

Flexible hoses are supplied for the mixture connections to the burner.

ELECTRICAL SYSTEM CONNECTIONS

The main power connections will consist of three phase voltage according to local codes.
See Line Diagram drawing #08-3433-02.

The line diagram drawing 08-3433-02 will show all the necessary field connections that must be made for proper system operation.

Special care must be taken when making wire runs in conduit. All low voltage signal wiring must be made with shielded cable in conduit separate from AC voltage wiring to insure that electrical noise is not transmitted into electronic components. Customer interlocks and go signals should be tied into the web handling equipment in such a way that the burner will be shut down in case of a controlled stop, emergency stop, or web break.

The customer should not make any interlock connections not included on the system drawings as this may interfere with the logical functioning of the system.

SYSTEM COMPONENT OVERVIEW

Acombustion system typical Flynn F3000 Surface Treating System consists of the burner, air/gas mixing station and control cabinet/HMI-operator interface.

BURNER

The burner consists of the HC-511 - 108″ FS triple slot burner and dual ignition transformer.

EXHAUST

The customer supplied & installed butterfly will not be a perfect seal, to insure that there is always a minimum exhaust flow. The dampers) should be adjusted so that there is the maximum exhaust flow without causing turbulence in the flame.

BURNER HC-511-108″ FS TRIPLE SLOT

The burner is a cast iron (3) slot. The ribbon is a 3 slot construction rated at 15,000 BTU's per inch max.

PIPING AND MAIN ELECTRICAL CABINET ASSEMBLY

The piping frame and Main Electrical cabinet are mated together in one unit. The piping frame houses the air/gas piping assembly, consisting of all the motorized valves, solenoids, blocking gas valves, air – gas mixer, zero regulator and other necessary components needed for proper and safe control of the gas flame. The control cabinet mounted to the piping cabinet contains all of the controls, relays, and other various components necessary to logically operate the system.

See Piping drawing #2009-1324-02

PIPING FRAME ASSEMBLY FIG. 2

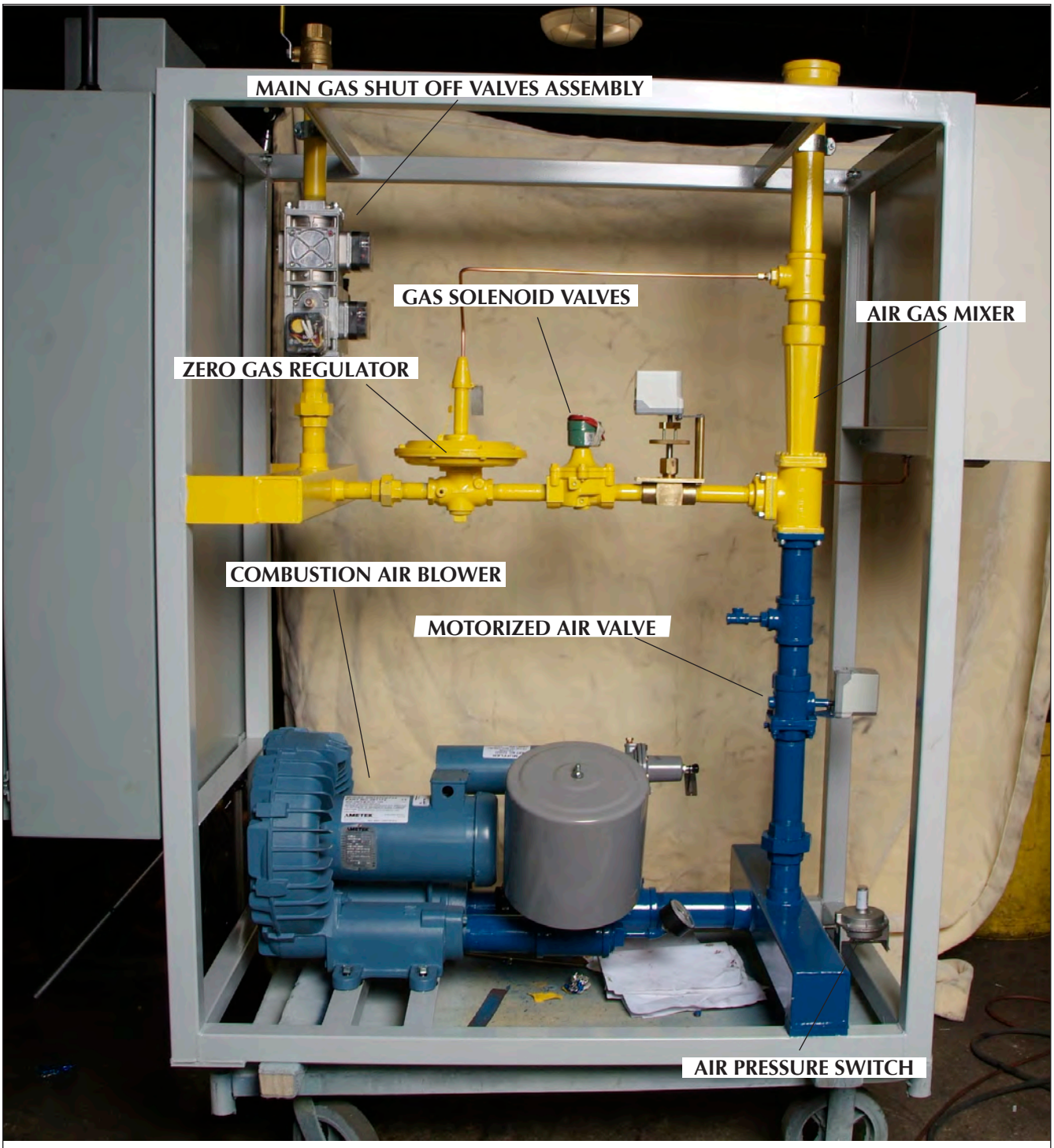

BALL VALVE

The main shut off ball valve is placed at the inlet gas connection of the unit. Its sole purpose is to shut the gas supply off to the system during shut down or maintenance.

See Piping drawing #2009-1324-02

Item #1 1 ¼″ ball valve (Flynn part #177646)

MAIN GAS SHUT OFF VALVES

These Dungs valves work in conjunction with each other to automatically shut off the gas supply to the system. One of the "blocking valves" has a pressure gauge to give a visual indication of inlet gas pressure. These valves will shut if the high gas, combustion, or exhaust flow switches are open, and will close automatically under the same conditions.

See Piping drawing #08-3433-13
Item #2 Flynn part number 405247

BURNER GAS SOLENOIDS

The burner gas solenoids are used to turn the gas flow to the burner on and off. This will occur automatically with cut in speed, or manually with the burner on/off switch.

See Piping drawing #2009-1324-02
Item #24 Flynn part #404626

ZERO GAS REGULATOR

The zero gas regulator is used in conjunction with the venturi in the air – gas mixer to proportionally supply fuel on demand. As the line changes speeds, the air motorized valve will automatically adjust the air entering the air inlet of the mixer. As the air enters the mixer, a suction is created which draws the fuel from the fuel line. The proper amount of fuel is drawn as a result of the zero gas regulator. The zero gas regulator must never be adjusted in the field.

See Piping drawing #08-3433-13
Item #3 – Flynn part 160190

AIR – GAS MIXER

The air – gas mixer is a venturi style. The air is used to draw the gas from the gas line. The mixer and it's orifice are sized to deliver the required BTU output for a given application. If more BTU's are required, the jet size within the mixer can be increased to allow the BTU increase.

NOTE:
Please consult the factory prior to making changes to the mixing equipment.
Phone: 1-914-636-1320

See Piping drawing #08-3433-13
Item #8 – Air/Gas mixer 1616 (Flynn part 095000)

COMBUSTION AIR BLOWER

The combustion air blower provides the primary air to mix with the gas for combustion at the burner. It is sized for the specific application, i.e. the burner type and the flame space length.

See Piping drawing #2009-1324-02
Item #5 Combustion air blower (Flynn part # 404270)

RELIEF VALVE

The relief valve is used to bleed off excess air to insure that the combustion air blower doesn't overheat. This is especially important when the systems are equipped with an air solenoid shut off valve in the combustion air line. They are usually set so that at high fire, only a small amount of air is being relieved.

See Piping drawing #08-3433-13

Item #10 Air pressure relief valve. (Flynn part #160034)
Item #11 Air pressure relief muffler. (Flynn part #127550)

COMBUSTION AIR FILTER

The combustion air filter is used to filter the air going into the combustion air blower. It is very important to keep this filter clean and in place. If the filter becomes clogged the system will not operate properly, and if it is removed and not replaced, dirt and debris will get sucked into the mixing system clogging the burner.

See Piping drawing #08-3433-13

Item #12 Combustion air filter. (Flynn part #116893)

BURNER AIR CONTROL VALVE AND ACTUATOR

The air valve is used to control the firing rate (Btu's per hour) of the burner. As line speed changes occur, the control computer will automatically adjust the firing rate based on feedback from a speed sensor.

See Piping drawing #08-3433-13

Item #17 Air butterfly valve assembly. (Flynn part #1777792)

PRESSURE SWITCHES

The system utilizes several pressure switches for the purpose of safety shutdown. These include high and low gas pressure, combustion air, and exhaust. The gas pressure switches are used to insure that proper and safe levels of gas pressure are present in the system. The combustion air pressure switch is used to insure that the combustion air blower is operating properly. The exhaust pressure switch (vacuum), which is mounted external to the system, insures that there is exhaust suction. If any of these switches fail, the system will not start, or will be shut down.

See Piping drawing #08-3433-13

Item Exhaust pressure switch. (Flynn part #171000)
Item Combustion air pressure switch. (Flynn part #402638)
Item Main gas valve with High and Low gas pressure switches. (Flynn part # 405247)

CONTROL CABINET ASSEMBLY FIG. 3

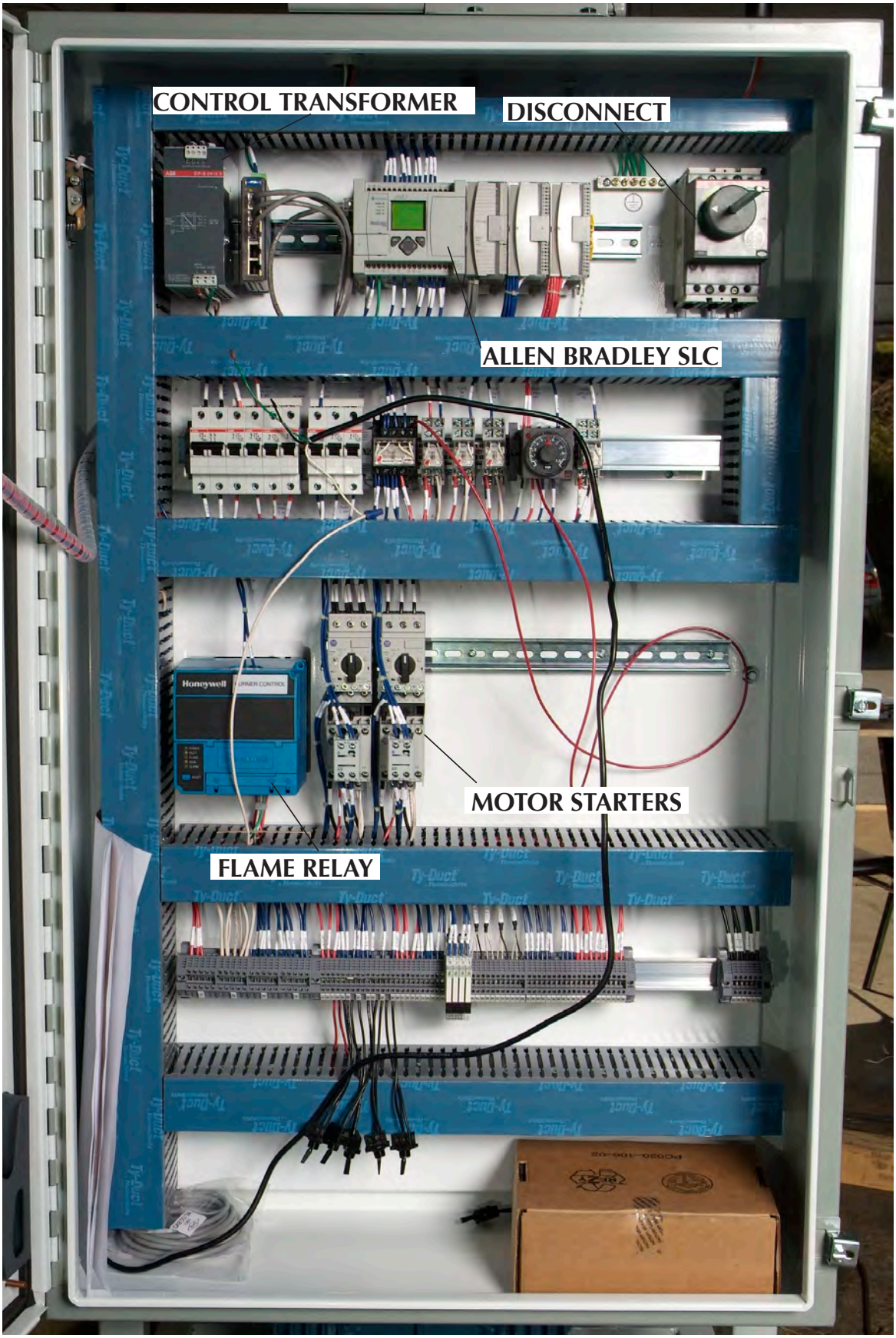

The control cabinet contains all the system control components, responsible for the logical and safe running of the system.

Power Disconnect: Used to turn the main power off to the system.

Motor Starters: Used to control the starting and stopping of the exhaust, and combustion air blowers.

Control Relays: Used to control various functions related to the logical operation of the system. One example would be the safety interlock relay, which is used to tie the safety signal into the control computer.

Honeywell RM7890A1015/B Flame Control w/ Q7800A1005 Sub Base: This control is used to initiate the ignition cycle, open the gas and air solenoids, monitor the flame signal if present, and shut the gas and air valves if the flame does not ignite or fails after ignition.

Solid State Relays: Used to control the logical operation of the system.

Control Transformer: Used to supply the 120 VAC necessary for the operation of the control elements in the control cabinet.

PLC A-B Compact Logix 1769-L23E
. The Allen Bradley SLC is used to control the entire system operation through digital, analog, and serial communications inputs and outputs.

CONTROL CONSOLE

The control console, or operator console, is the enclosure which contains the interface necessary to run the system. It consists of an Allen Bradley PanelView Plus 700, and an E-Stop push button. The alarm horn is also mounted on the side of the console, with an adjustment screw for noise level.

EXTERNAL SYSTEM COMPONENTS

Exhaust Fan: The exhaust fan is used to exhaust the products of combustion. The fan is monitored with a pressure switch, as stated above, and will run off of the main supply three phase power.

Boot Screen

Display

The header is the main navigation bar and shown on every page with the exception of the “clean screen” page.
To navigate to a new page simply touch the “tab” corresponding to the desired area of control. When navigation is complete and we are actually on that page, the associated tab will become a darker blue. As shown in the example above, we are now on the burner page. The padlock on the engineering tab means it is password protected and the user must enter the correct username and password to gain access. Once the correct username and password has been entered and accepted, the padlock will shown in the open position (shown above)

General

Numeric displays shown in yellow allow user input (read/write) numeric displays in green are read only.

Touching each tab will direct the user to that particular area of control, which are as follows;

Overview- controls the primary functions like starting and stopping the main drive along with the major set points

Burner – shows the ignition and burner control indicators

Trends – shows the RTD temperature trends

Engineer [password protected] – Contains the main set up variables.

Alarms – shows all active and past alarms. The text will flash red if there are any alarms present. If no alarms are present, the text remains black.

Emergency stop reset

Also shown on the overview screen is the emergency stop reset button.

After the toaster has been powered down or an Emergency Stop has been pressed, the machine is deactivated by means of a safety relay which disconnects all power. Upon resetting the Emergency Stop or applying power for the first time, this relay must be reset. This is done by pressing the button shown after first resetting the main panel.

Main Overview

Display

The overview screen is displayed when the toaster is first powered on.

Here we have control of the local/remote setpoints control and the starting and stopping of the drum.

Buttons

Clean Screen – This starts the clean screen routine which blanks all control so the user can safely wipe the screen of any dust. After 10 seconds it will return to the main overview page.

Local/Remote Setpoints – Control of the temperature and drum speed can be controlled either locally or remotely.

a) Local setpoints. When in local the drum speed and temperature will be shown in yellow indicating that they can be changed on the screen between selected limits.

b) Remote setpoints. In remote setpoints mode, control of the toasting parameters are from the main panel. All setpoint on the screen will become green (read-only)

Start Drum – Starts the drum rotation at the speed selected either locally or remotely. Pressing the start button will start a 5 second, start warning alarm indicating that the drum is about to start. Releasing this button prior to 5 seconds will result in the drum not starting

Stop Drum – Stops the drum immediately

Status

Production Ready Indicator – Indicates that the drum is;

a) Rotating

b) The doctor blades are in place

c) The temperature has reached operating setpoint

Drum Pressure – (Future control)

RTD 1~5 – Shows the actual temperature of each RTD probe. If an RTD is not selected, it will not be shown here.

Doctor Blade Indicators – Shown green when proximity switch is detecting the doctor blade in place, gray when the doctor blade is removed

Drive Motor – Shown;

Gray = Off or not running

Green = On and drive running

Red Flashing = drive fault exists

Sub Displays

Clean Screen

Burner

Display

Main Burner display and control screen. This allows full control of the burner and drum heating.

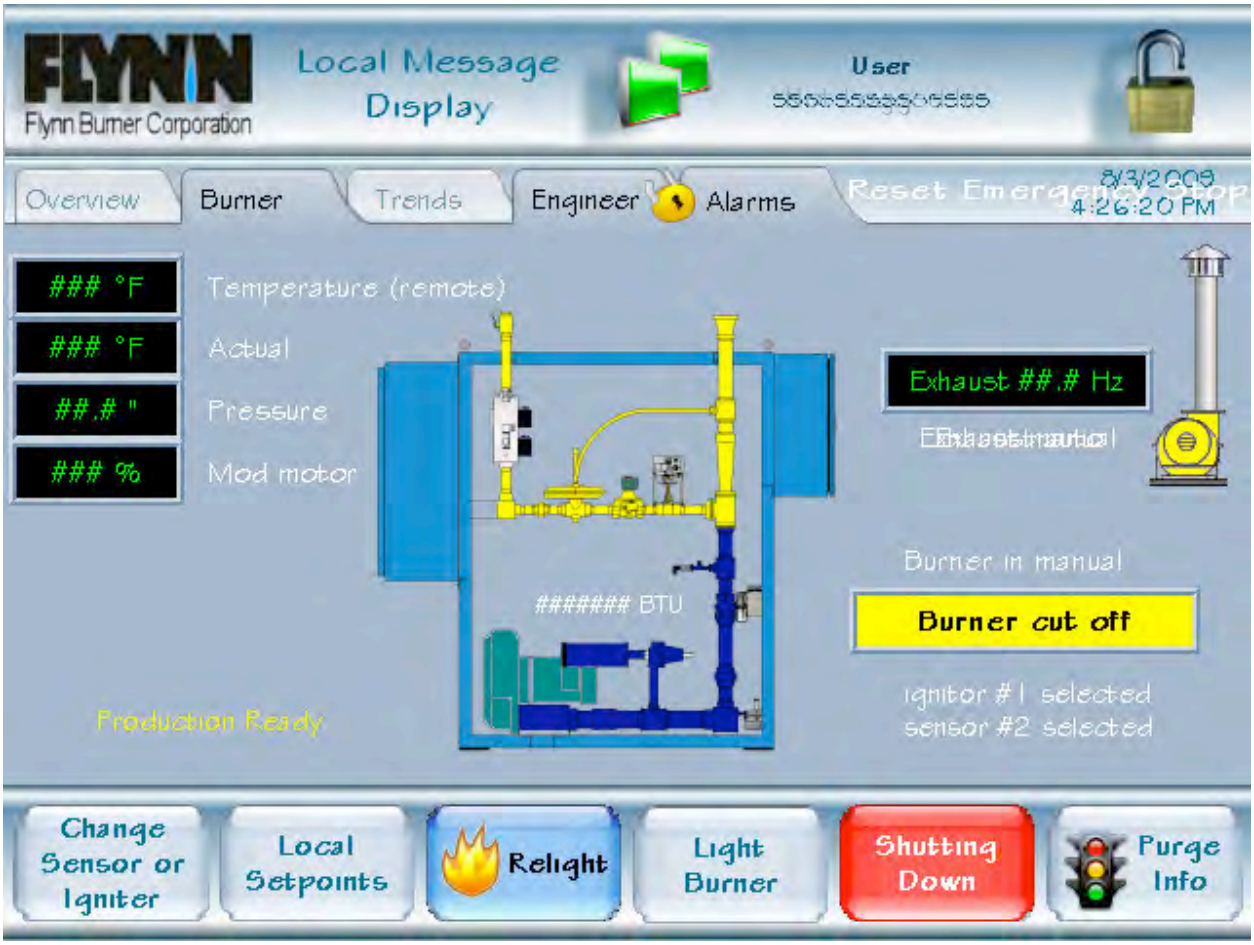

Buttons

Choose Sensor or Igniter – Allows the selection of either the primary or secondary igniter or sensor

Local/Remote Setpoints – Control of the temperature and drum speed can be controlled either locally or remotely.

a) Local setpoints. When in local the drum speed and temperature will be shown in yellow indicating that they can be changed on the screen between selected limits.

b) Remote setpoints. In remote setpoints mode, control of the toasting parameters are from the main panel. All setpoint on the screen will become green (read-only)

Relight – Relights the burner in the event of flame failure (only visible after primary ignition)

Light Burner – Starts the purge and ignition sequence

Shutdown – Starts the automatic shutdown sequence. Cuts of the burner and starts a 6 hour cool down period.

Purge Info – Displays the ignition diagnostic page

Status

Production Ready Indicator – Indicates that the drum is;

a) Rotating
b) The doctor blades are in place
c) The temperature has reached operating setpoint

Numeric Indicators –

a) Temperature, either local or remote setpoint (see Local/Remote Setpoints)
b) Actual, actual average temperature of RTD's that are enabled
c) Pressure, combustion air pressure
d) Mod Motor, percentage open command to combustion air modulating valve
e) Exhaust, speed command for exhaust blower
f) BTU, Actual BTU output of the burner

Graphic Indicators – This depicts the current status of the burner, the following states exist

a) Burner Off, burner has not been started
b) Purging, the purge sequence has been correctly initiated and is timing out
c) Lighting, the controller is currently trying to establish a flame
d) Flame Established, a flame is correctly sensed and running under normal control
e) Flame Failed, burner has failed and a relight is necessary
f) Closing to Low Fire, after a purge, the burner must close down to light at a lower pressure prior to ignition
g) Low Fire Hold, the burner is being held in low fire position. This is normally caused by either one or more of the doctor blade proximities has failed or not detected the doctor blade in position or the main drive rotation has not been sensed
h) Shutdown, the burner shutdown process has been initiated
i) Burner Cut Off, the toaster is under normal control but has automatically shut off the burner. This will automatically relight once the temperature begins to fall again.

Sub Displays

Igniter Select

Burner Diagnostics

Diagnostics. This is a flowchart corresponding to the safety circuit . Each indicator shows either gray, yellow, green or red flashing. Generically, gray is off, yellow is waiting or chaecking, green is OK and red is fail.

The indicators are as follows

Indicator	Indicator Green	Indicator Yellow	Indicator Red
Burner off	Burner started		
Hi Temperature Safety	Hi Temp Safety OK		Hi Temp safety has tripped, reset in panel
Exhaust Fan	Exhaust fan running	Exhaust fan starting	Exhaust running signal not detected from MCC panel
Exhaust Air Flo	Exhaust air flow OK	Exhaust fan starting up	No exhaust air flow detected, reset on alarm page
Valve Closed	Valve proven closed	Checking valve is closed	Valve closed signal not present, not checked after purge
Hi Fire Position	Valve at hi fire position	Valve is opening up	Valve should have opened up, not checked after purge
Exhaust Speed	Exhaust fan at 60Hz	Exhaust is starting up	Valve is not at 60Hz during purge, not checked after purge
Combustion Blower	Blower running	Blower starting up	Blower running signal not detected
Combustion Air Flow	Blower air flow OK	Blower starting up	Blower air pressure switch not detected
Hi Gas Pressure	Gas pressure OK		Hi gas pressure tripped, reset on alarm page
Lo Gas Pressure	Gas pressure OK		Lo gas pressure tripped, reset on alarm page
Purge Time	Purge time complete	Purging, shows time left	
Light Burner	Ignition complete		Flame failed

Trends

Display

This is the main trending page for temperatures. The 6 pens indicate RTD's 1 through 5 and the setpoin.

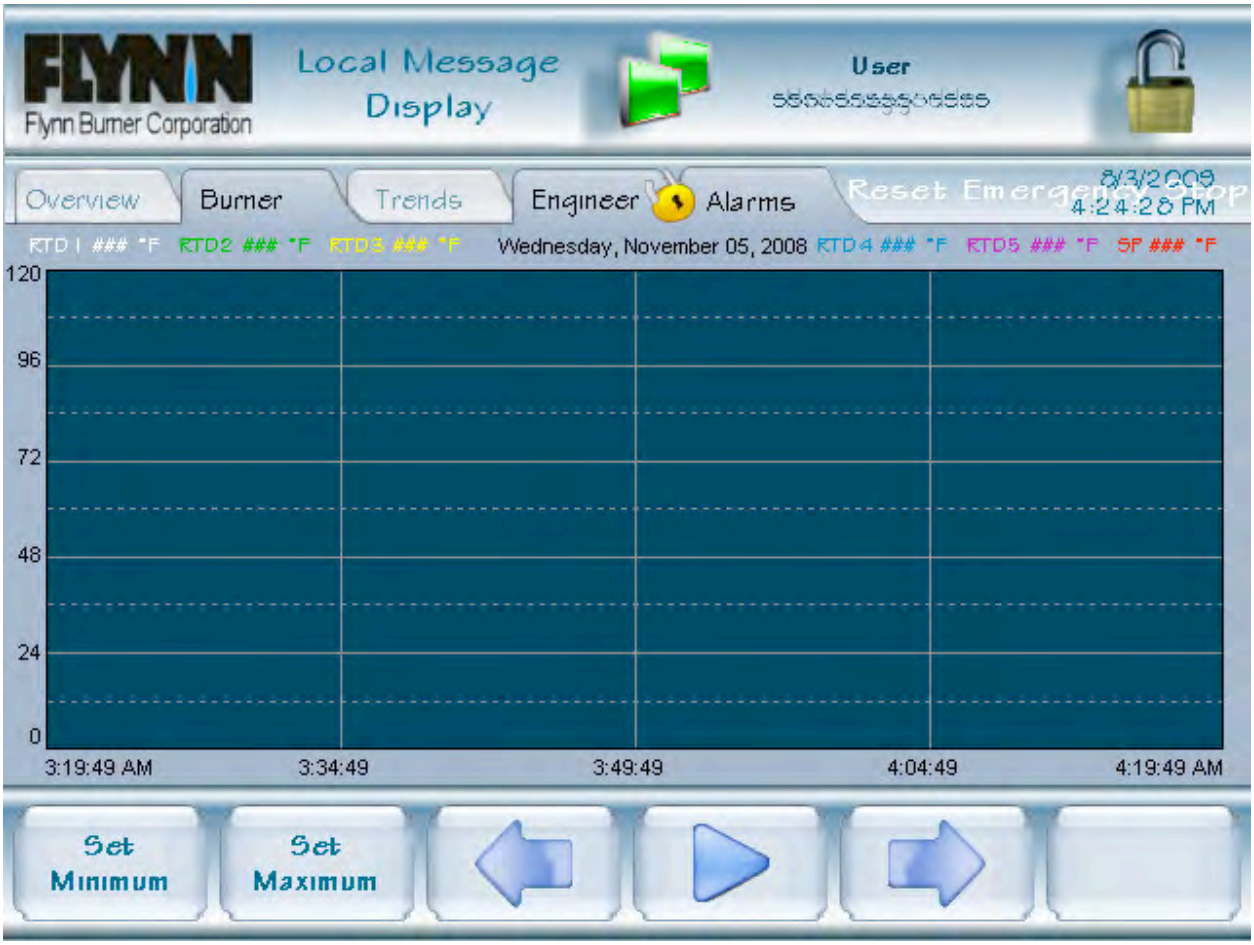

Set Minimum/Maximum

Numeric entry scales the trend between these two values and can be used for better resolution. Note, the time span cannot be changed and pens cannot be dynamically disabled.

VCR Buttons

Can be used to scroll backwards and forwards as well as pause the display

Engineer

Display

Here the main engineering settings are accessible under password protection.

Buttons

Configure Panelview – Allows access to the internal panelview configuration settings. See Panelview Plus user manual for more information

Burner Auto/Manual – Sets the operation of the burner. Automatic uses the PID settings to regulate the temperature according to the setpoint. Manual fixes the burner output power

Exhaust Auto/Manual – Allows the exhaust control and speed to be set by the program or by the user

Exhaust On/Off – [manual mode only] Allows the starting and stopping of the exhaust fan.

Configure Burner – Allows further settings of the burner (authorized personnel only)

Numeric Inputs

Local Burner Setpoint – Local setpoint only

Actual Temperature – Average RTD temperature display

Manual Setpoint – Manual setpoint for burner when manual control selected

Entered in inches water column if cascade selected

Entered in percent if cascade control not selected

Actual Pressure – Combustion air pressure

Mod Motor Command – Modulating motor analog command (cascade control only)

CV Out – Result of primary PID (cascade control only)

Exhaust Fan Manual Speed – Speed command for exhaust fan when operating in manual

Exhaust Fan Actual Speed – Current speed of exhaust fan

Firing Rate – Output power of burner in BTU's

Sub Displays

Configure Burner (authorized personnel only)

Used for advance settings of the burner control. Changing settings here could adversely affect production.

Buttons

RTD 1~5 Enable/Disable – Allows the operation of the individual RTD's. Only the RTD's that are enabled are averaged into the control algorithm.

Cascade On/Off – Sets the method of control for the burner. Cascade on will drive the firing rate valve (modulating motor) to a desired pressure to achieve the firing rate required. Cascade off will drive the valve to a certain position (0-100% = full closed to full open) regardless of the input pressure

Numeric Inputs

Low fire setpoint – Adjusts the minimum pressure the burner will achieve under normal cascade control

High fire setpoint – Adjusts the maximum pressure the burner will achieve under normal cascade control

Ignition setpoint – Adjusts the ignition pressure the burner will drive to before ignition is attempted

Burner Cutback – Adjusts the degree adder the burner will add to the setpoint before cutting the burner off

Hi Temperature Limit – Maximum temperature allowable before burner cuts off

Burner Orifice Size – Adjusts the orifice size in the BTU calculation

Alarms

Display

Default alarm page

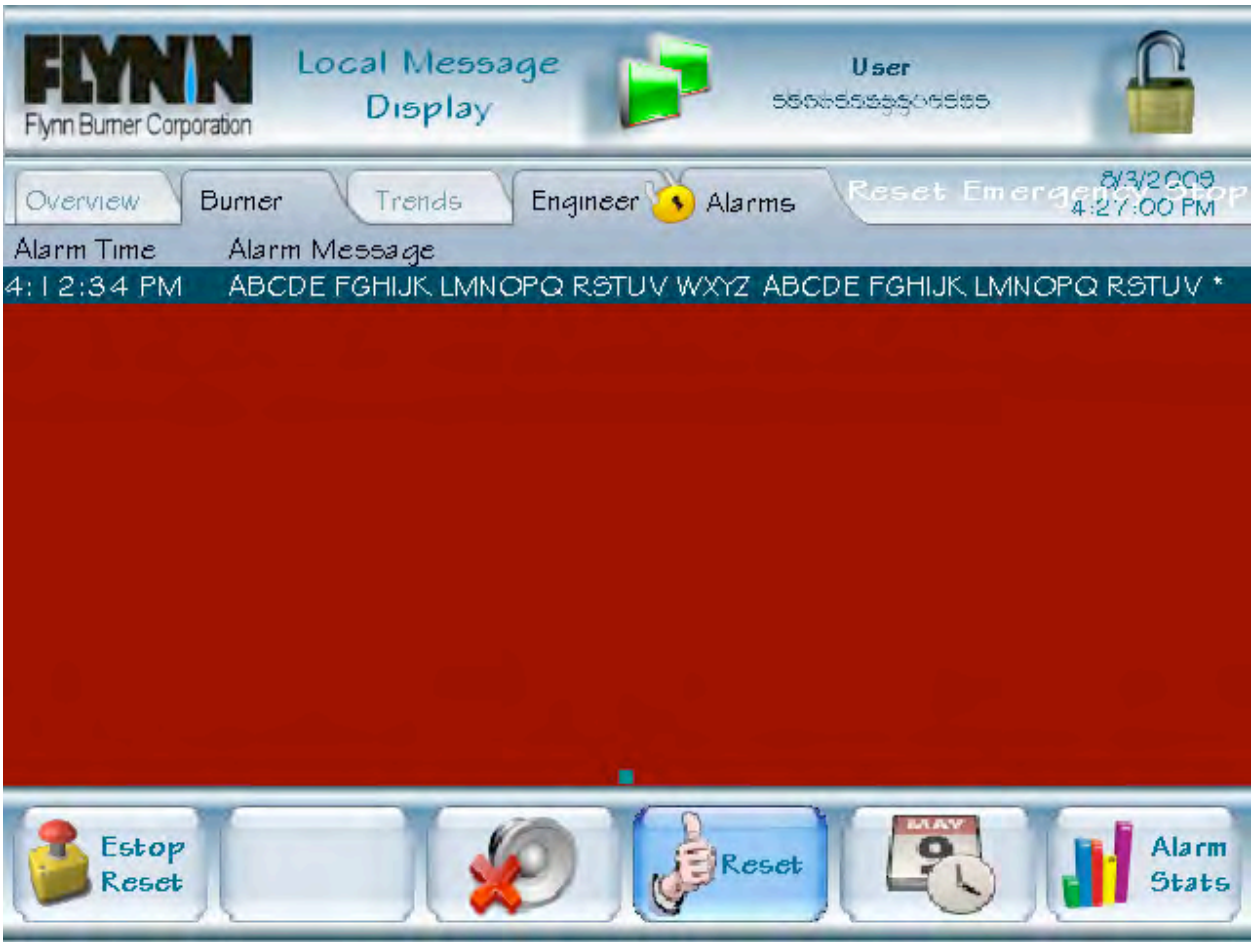

Buttons

EStop Reset – After the toaster has been powered down or an Emergency Stop has been pressed, the machine is deactivated by means of a safety relay which disconnects all power. Upon resetting the Emergency Stop or applying power for the first time, this relay must be reset. This is done by pressing the button shown after first resetting the main panel.

Silence Alarm – Mutes the audible alarm horn
Alarm Reset – Resets an alarm if required
Alarm Reset – Resets an alarm if required
Alarm History – Shows the alarm history page
Alarm Statistics – Shows the alarm statistics page

Alarm Messages

TAG	ALARM	DESCRIPTION
ALARM.WORD[0].0	#1 - LOW BATTERY ALARM	LOW BATTERY IN PLC
ALARM.WORD[0].1	#2 - LOCAL ENBT COMMUNICATION FAULT	LOCAL ETHERNET CARD HAS FAULTED
ALARM.WORD[0].2	#3 – LOCAL EMBEDDED INPUT CARD FAULT	LOCAL INPUT CARD HAS FAULTED
ALARM.WORD[0].3	#4 - LOCAL EMBEDDED OUTPUT CARD FAULT	LOCAL OUTPUT CARD HAS FAULTED
ALARM.WORD[0].4	#5 - LOCAL EMBEDDED ANALOG CARD FAULT	LOCAL ANALOG CARD HAS FAULTED
ALARM.WORD[0].5	#6 - LOCAL EMBEDDED COUNTER CARD FAULT	LOCAL COUNTER CARD HAS FAULTED
ALARM.WORD[0].6	#7 - LOCAL EXPANSION RTD CARD FAULT	EXPANSION RTD CARD HAS FAULTED
ALARM.WORD[1].0	#33 - IO CARD 01 CHANNEL FAULT	CHANNEL FAULTED ON LOCAL CARD
ALARM.WORD[1].1	#34 - IO CARD 02 CHANNEL FAULT	CHANNEL FAULTED ON LOCAL CARD
ALARM.WORD[1].2	#35 - IO CARD 03 CHANNEL FAULT	CHANNEL FAULTED ON LOCAL CARD
ALARM.WORD[1].3	#36 - IO CARD 04 CHANNEL FAULT	CHANNEL FAULTED ON LOCAL CARD
ALARM.WORD[1].4	#37 - IO CARD 05 CHANNEL FAULT	CHANNEL FAULTED ON LOCAL CARD
ALARM.WORD[1].5	#38 - IO CARD 05 CHANNEL 0 OPEN WIRE FAULT	OPEN WIRE ON RTD PROBE
ALARM.WORD[1].6	#39 - IO CARD 05 CHANNEL 1 OPEN WIRE FAULT	OPEN WIRE ON RTD PROBE
ALARM.WORD[1].7	#40 - IO CARD 05 CHANNEL 2 OPEN WIRE FAULT	OPEN WIRE ON RTD PROBE
ALARM.WORD[1].8	#41 - IO CARD 05 CHANNEL 3 OPEN WIRE FAULT	OPEN WIRE ON RTD PROBE
ALARM.WORD[1].9	#42 - IO CARD 05 CHANNEL 4 OPEN WIRE FAULT	OPEN WIRE ON RTD PROBE
ALARM.WORD[1].10	#43 - IO CARD 05 CHANNEL 5 OPEN WIRE FAULT	OPEN WIRE ON RTD PROBE
ALARM.WORD[3].0	#97 - PANEL EMERGENCY STOP PRESSED	EMERGENCY STOP PRESSED ON PANEL DOOR
ALARM.WORD[3].1	#98 - EMERGENCY STOP RELAY FAILED TO RESET	EMERGENCY STOP RELAY DID NOT RESET, CHECK CIRCUIT
ALARM.WORD[3].2	#99 -MAIN DRIVE CIRCUIT BREAKER TRIPPED	MCB SUPPLYING SEW MOVIMOT HAS TRIPPED
ALARM.WORD[3].3	#100 - BLOWER MAIN CIRCUIT BREAKER TRIPPED	MCB SUPPLYING COMBUSTION BLOWER HAS TRIPPED
ALARM.WORD[3].4	#101 - MAIN DRIVE NOT RUNNING	MAIN DRIVE NOT RUNNING, CHECK CHAIN PROXIMITY SWITCH
ALARM.WORD[3].5	#102 - MAIN DRIVE STOPPED OR FAULTED, BURNER DISABLED	DRIVE STOPPED (SEE ABOVE) SO BURNERS DISABLED

TAG	ALARM	DESCRIPTION
ALARM.WORD[3].6	#103 - EMERGENCY STOP RESET REQUIRED	EMERGENCY STOP HAS NOT BEEN RESET
ALARM.WORD[4].0	#129 - EXHAUST FAILED TO RUN	EXHAUST DRIVE IN MCC IS NOT RUNNING OR FAULTED
ALARM.WORD[4].1	#130 - BLOWER FAILED TO RUN	BLOWER STARTER DID NOT PULL IN
ALARM.WORD[4].2	#131 - NO EXHAUST AIR FLOW DETECTED	EXHAUST PRESSURE SWITCH HAS OPENED, CHECK FOR VIBRATION OR NO AIR
ALARM.WORD[4].3	#132 - NO COMBUSTION BLOWER AIR FLOW DETECTED	BLOWER PRESSURE SWITCH HAS OPENED, CHECK FOR VIBRATION OR NO AIR
ALARM.WORD[4].4	#133 - EXHAUST PRESSURE SWITCH FAILED OR JUMPERED OUT	#133 - EXHAUST PRESSURE SWITCH FAILED OR JUMPERED OUT
ALARM.WORD[4].5	#134 - COMBUSTION BLOWER PRESSURE SWITCH FAILED OR JUMPERED OUT	BLOWER PRESSURE SWITCH IS MADE AND BLOWER NOT RUNNING
ALARM.WORD[4].6	#135 - VALVE NOT IN CLOSED POSITION	MAIN GAS VALVE NOT CLOSED
ALARM.WORD[4].7	#136 - HI GAS PRESSURE DETECTED	HIGH GAS PRESSURE SEEN IN GAS LINE
ALARM.WORD[4].8	#137 - HI TEMPERATURE ALARM	HI TEMPERATURE DETECTED IN EXHAUST STACK
ALARM.WORD[4].9	#138 - PURGE TIMER SET TOO SHORT	(INDICATOR ONLY) PURGE TIMER IS NOT LONG ENOUGH
ALARM.WORD[4].10	#139 - FLAME FAILED, BURNER LOCKOUT	FLAME FAILED FROM HONEYWELL CONTROLLER
ALARM.WORD[4].11	#140 - AT LEAST ONE RTD MUST BE SELECTED	ALL RTD'S HAVE BEEN MANUALLY DE-SELECTED
ALARM.WORD[4].12	#141 - LOW GAS PRESSURE DETECTED	LOW GAS PRESSURE OR MANUALLY SHUT GAS VALVE
ALARM.WORD[4].13	#142 - PRESSURE SENSOR SIGNAL LOST	ANALOG PRESSURE SENSOR READING ZERO THOUGH PRESSURE SWITCH IS MADE
ALARM.WORD[4].14	#143 - BURNER NOT AT HI FIRE POSITION TO PURGE	BURNER HAS NOT OPENED TO HI FIRE POSITION (HONEYWELL INTERNAL CAM)
ALARM.WORD[4].15	#144 - EXHAUST NOT RUNNING AT FULL SPEED	EXHAUST NOT RUNNING AT SPEED (TAKEN FROM MCC)
ALARM.WORD[4].16	#145 - OVER TEMPERATURE LOCKOUT	SOFTWARE OVER-TEMPERATURE LOCKOUT TRIPPED, RESET ALARM TO CONTINUE
ALARM.WORD[4].17	#146 - DOCTOR BLADE PROXIMITY SWITCH FAILED	ONE PROXIMITY IS MADE AND ONE NOT, BOTH SHOULD BE SAME STATE

Maintenance

System maintenance is relatively simple. The main parts of the system which should be maintained consist of the burner, exhaust blower, and the combustion air filter.

BURNER:

The burner ribbon must be kept clean and free of dirt and debris. It may be cleaned with compressed air blown through the ribbon, or the gentle use of a torch tip cleaner to poke any deposits through the ribbon, where they may be blown out. The ribbon must not be scrubbed, as this may bend the metal ribbon used to form the flame ports. If the burner ribbon becomes very clogged, then it must be removed and returned to the factory for re-ribboning.

The electrodes must also be kept in working order. When they become old and worn, they should be replaced.

The electrode wires should also be checked regularly to insure that they are not cracked, or broken.

EXHAUST FAN:

The bearings on the exhaust fan should be greased regularly to insure long life.

COMBUSTION AIR FILTER:

This filter should be checked weekly, and the pre-filter blown out to insure system operation. The pre-filter should be changed approximately every 3 weeks or as needed. The filter element should be changed every 6 weeks or as needed.

RECOMMENDED SPARE PARTS LIST FOR AIR-GAS PIPING ASSEMBLY

Part #	Qty	Description	Price / each
407799	1	combustion air blower PFR757	$2200.00
116893	1	Combustion Air Filter	$585.00
300417	1	Air Transducer assembly	$690.00
402638	1	Air pressure switch	$79.00
119661	1	Vacuum gauge	$70.00
303105	1	Valve Air Motorized assembly	$1950.00

RECOMMENDED SPARE PARTS LIST FOR TREATER STATION ASSEMBLY

Part #	Qty	Description	Price / each
300489	1	Burner Assembly	$2500.00
175400	1	Ignition Trnasformer	$85.00
089600	4	Ignition Electrode	$47.25

RECOMMENDED SPARE PARTS LIST FOR MAIN PANEL ASSEMBLY

Part #	Qty	Description	Price / each
158608	1	Honeywell Flame Relay	$235.00
158724	1	Surge Protector	$167.00
158611	1	Flame Relay Amplifier	$169.00

FLYNN BURNER CUSTOMER DRAWING LIST:

LINE AND WIRING	08-3433-00-05 (sheets 1 - 6)
MAIN PANEL ASSEMBLY	08-3433-06
MAIN PANEL ASSEMBLY	08-3433-10
2 BURNER PRETREATER AIR/GAS PIPING	08-3433-13
HC511-108″ FS (3) SLOT MULTPLE BOTTOM CENTER INLETS	08-3433-18

TABLE OF CONTENTS
==========

CONTENTS (THIS) ----------SHEET 0
EXHAUST & BLOWER POWER WIRING ------SHEET 1
HONEYWELL & CONTROL WIRING ---------SHEET 2
PLC IO WIRING ----------SHEET 3
PLC ANALOG WIRING ----------SHEET 4
THERMOCOUPLE CARD WIRING ----------SHEET 5
PANEL LAYOUT ----------SHEET 6
RECCOMENDED SPARE PARTS (TBD)-------SHEET 7

COMMUNICATION INFORMATION
==========

PLC NAME ---------- TBD
IP ADDRESS ---------- TBD
SUBNET ---------- TBD
GATEWAY ---------- TBD

DEPENDENCIES
==========

PANELVIEW PLUS 700 T ---------- TBD

WIRING NOTES
==========

1. UNLESS SPECIFIED ALL CONTROL WIRING TO BE THHN
2. UNLESS SPECIFIED ALL VFD WIRING TO BE XHHW2
3. ALL DC WIRING TO HAVE GROUNDED COMMON
4. CONTROL TRANSFORMER TO HAVE GROUNDED COMMON
5. ALL MOTOR LEADS TO BE TERMINATED ON TERMINALS PROVIDED
6. ALL FIELD WIRING TO BE TERMINATED ON TERMINALS PROVIDED
7. ALL CABLE NUMBERS MUST FOLLOW THESE DIAGRAMS
8. ALL CABLING MUST BE NUMBERED ON BOTH ENDS
9. SPARE CONDUCTORS SHOULD BE LABELLED ACCORDINGLY
10. SAFETY DEVICES TO BE INDIVIDUALLY RETURNED TO PANEL
11. ALL MOTOR GROUNDS TO BE LANDED AT TERMINALS PROVIDED
12. ALL MOTORS MUST BE INDIVIDUALLY GROUNDED
13. ALL FIELD WIRING MUST CONFORM TO NFPA & LOCAL CODES

LEGEND INFORMATION
==========

XXX ----------PANEL CONTROL TERMINAL
----------FIELD DEVICE TERMINAL
----------WIRE CONNECTION
----------COMPONENT TERMINAL CONNECTION
(SOLID) ----------INTERNAL WIRING
(BROKEN) ----------EXTERNAL WIRING

REVISIONS:	In consideration for having submitted this design prior, the recipient agrees that it will not be disclosed to others, nor reproductions made without permission, and that all rights in such construction and design are the confidential property of the FLYNN BURNER CORPORATION. This drawing or print is returnable upon demand.	DRAWN BY: DR APPROVED: SCALE: NONE DATE: 11-25-08	FLYNN BURNER CORPORATION NEW ROCHELLE - NEW YORK DRUM TOASTER LINE AND WIRING GL&V	DRAWING NO. D- 08-3433-00 SHEET NUMBER - 0

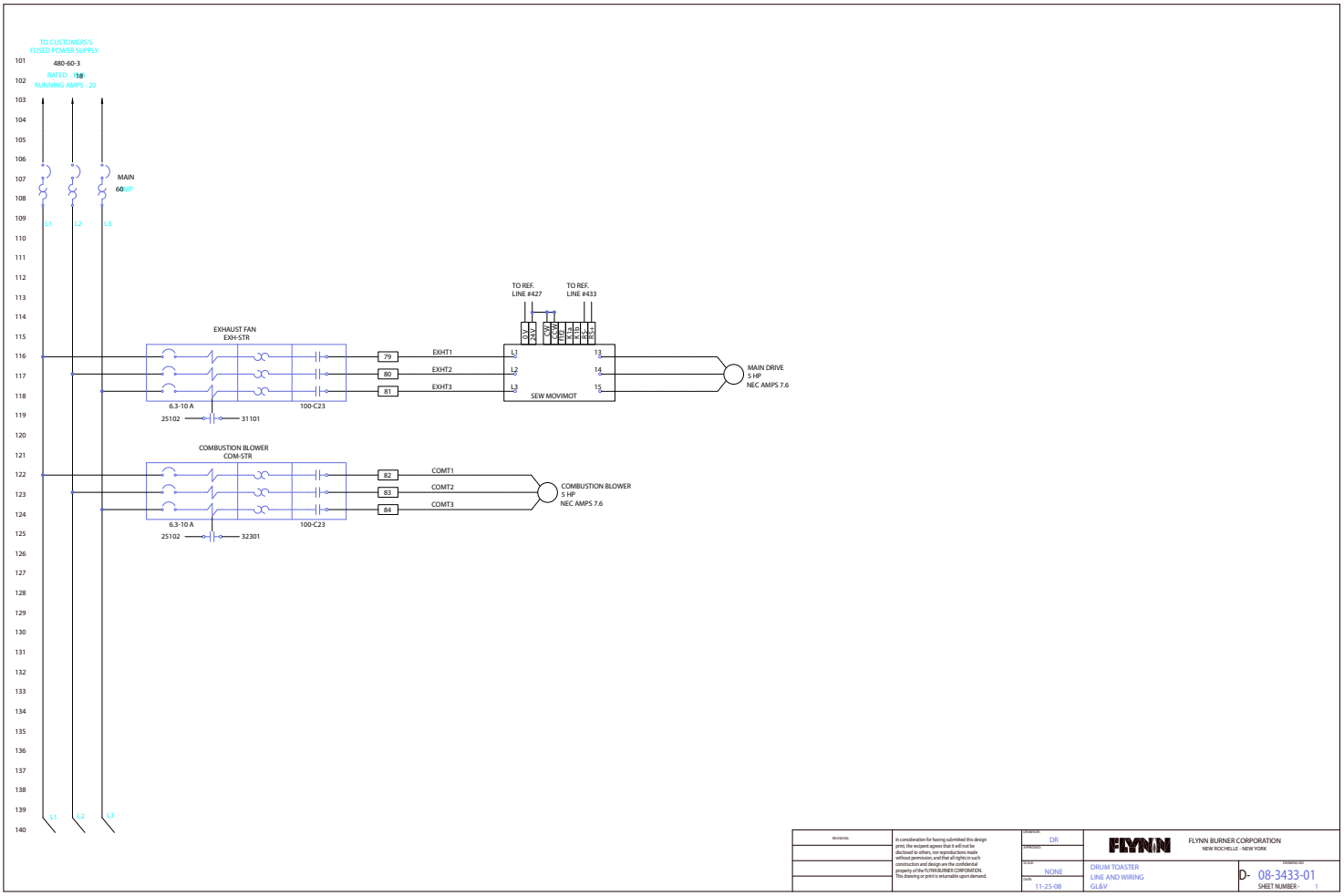

REVISIONS		DRAWN BY: DR	FLYNN	FLYNN BURNER CORPORATION NEW ROCHELLE - NEW YORK	
	In consideration for having submitted this design print, the recipient agrees that it will not be disclosed to others, nor reproduced in whole or in part without permission. All rights in such construction and design are the confidential property of the FLYNN BURNER CORPORATION. This drawing or print is returnable upon demand.	APPROVED:			
		SCALE: NONE		DRUM TOASTER LINE AND WIRING GL6V	DRAWING NO: D- 08-3433-01
		DATE: 11-25-08			SHEET NUMBER - 1

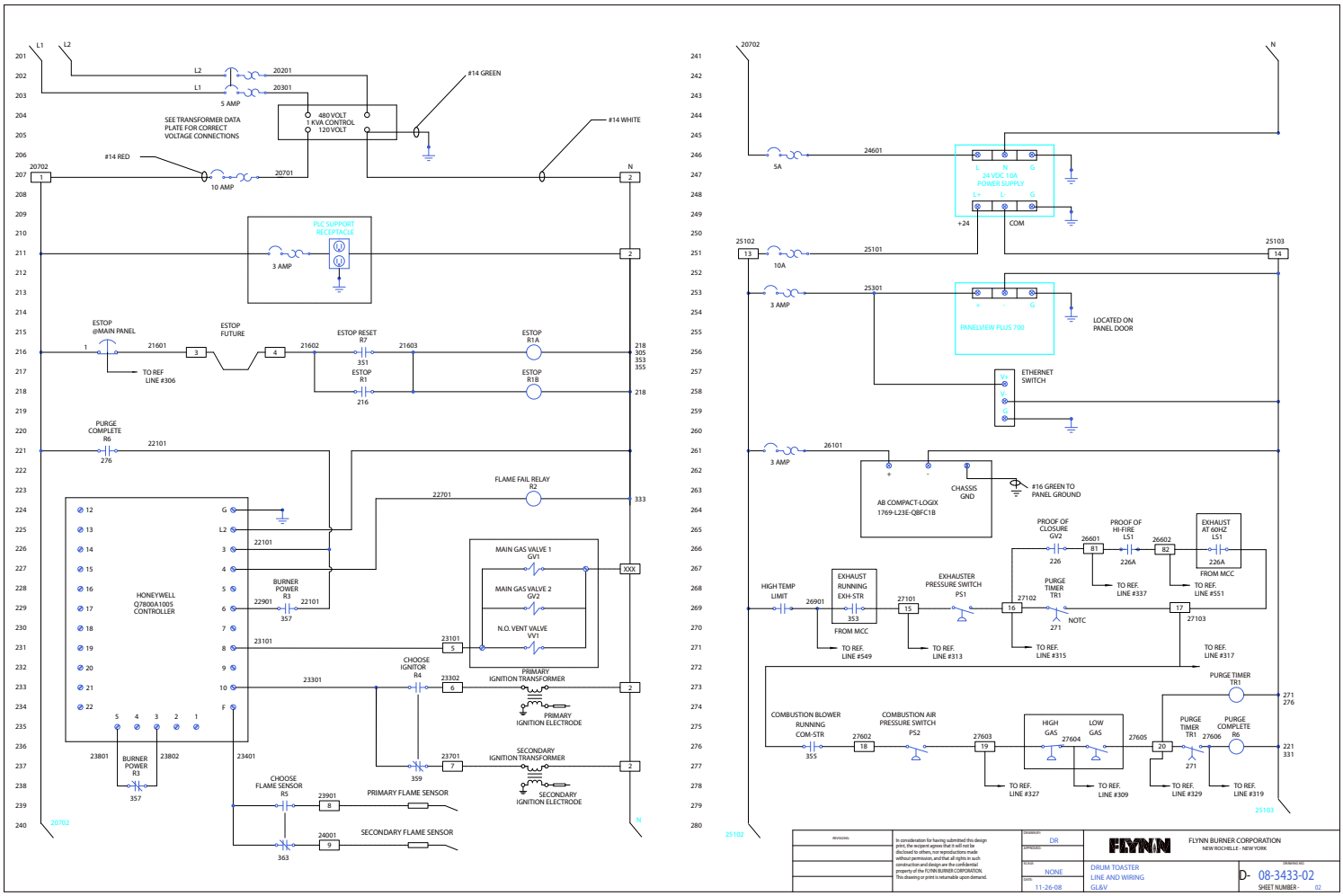
L1
L2
20201
20301
5 AMP
SEE TRANSFORMER DATA PLATE FOR CORRECT VOLTAGE CONNECTIONS
480 VOLT
1 KVA CONTROL
120 VOLT
#14 GREEN
#14 WHITE
#14 RED
10 AMP
20701
20702
N
PLC SUPPORT RECEPTACLE
3 AMP
ESTOP @MAIN PANEL
21601
TO REF LINE #306
ESTOP FUTURE
21602
ESTOP RESET R7
351
ESTOP R1
216
21603
ESTOP R1A
ESTOP R1B
218
305
353
355
PURGE COMPLETE R6
276
22101
FLAME FAIL RELAY R2
22701
333
HONEYWELL Q7800A1005 CONTROLLER
BURNER POWER R3
22901
357
MAIN GAS VALVE 1 GV1
MAIN GAS VALVE 2 GV2
N.O. VENT VALVE VV1
XXX
23101
23301
CHOOSE IGNITOR R4
23302
PRIMARY IGNITION TRANSFORMER
PRIMARY IGNITION ELECTRODE
23801
23802
23401
359
23701
SECONDARY IGNITION TRANSFORMER
SECONDARY IGNITION ELECTRODE
CHOOSE FLAME SENSOR R5
23901
PRIMARY FLAME SENSOR
24001
363
SECONDARY FLAME SENSOR
24601
5A
24 VDC 10A POWER SUPPLY
+24
COM
25102
25101
10A
25103
25301
PANELVIEW PLUS 700
LOCATED ON PANEL DOOR
ETHERNET SWITCH
26101
AB COMPACT-LOGIX 1769-L23E-QBFC1B
CHASSIS GND
#16 GREEN TO PANEL GROUND
PROOF OF CLOSURE GV2
226
PROOF OF HI-FIRE LS1
226A
EXHAUST AT 60HZ LS1
FROM MCC
HIGH TEMP LIMIT
26901
EXHAUST RUNNING EXH-STR
353
EXHAUSTER PRESSURE SWITCH PS1
PURGE TIMER TR1
271
NOTC
TO REF. LINE #549
TO REF. LINE #313
TO REF. LINE #315
TO REF. LINE #337
TO REF. LINE #551
TO REF. LINE #317
COMBUSTION BLOWER RUNNING COM-STR
355
COMBUSTION AIR PRESSURE SWITCH PS2
HIGH GAS
LOW GAS
PURGE COMPLETE R6
TO REF. LINE #327
TO REF. LINE #309
TO REF. LINE #329
TO REF. LINE #319
FLYNN BURNER CORPORATION
NEW ROCHELLE - NEW YORK
DRUM TOASTER
LINE AND WIRING
GL&V
DR
NONE
11-26-08
D- 08-3433-02
SHEET NUMBER - 02

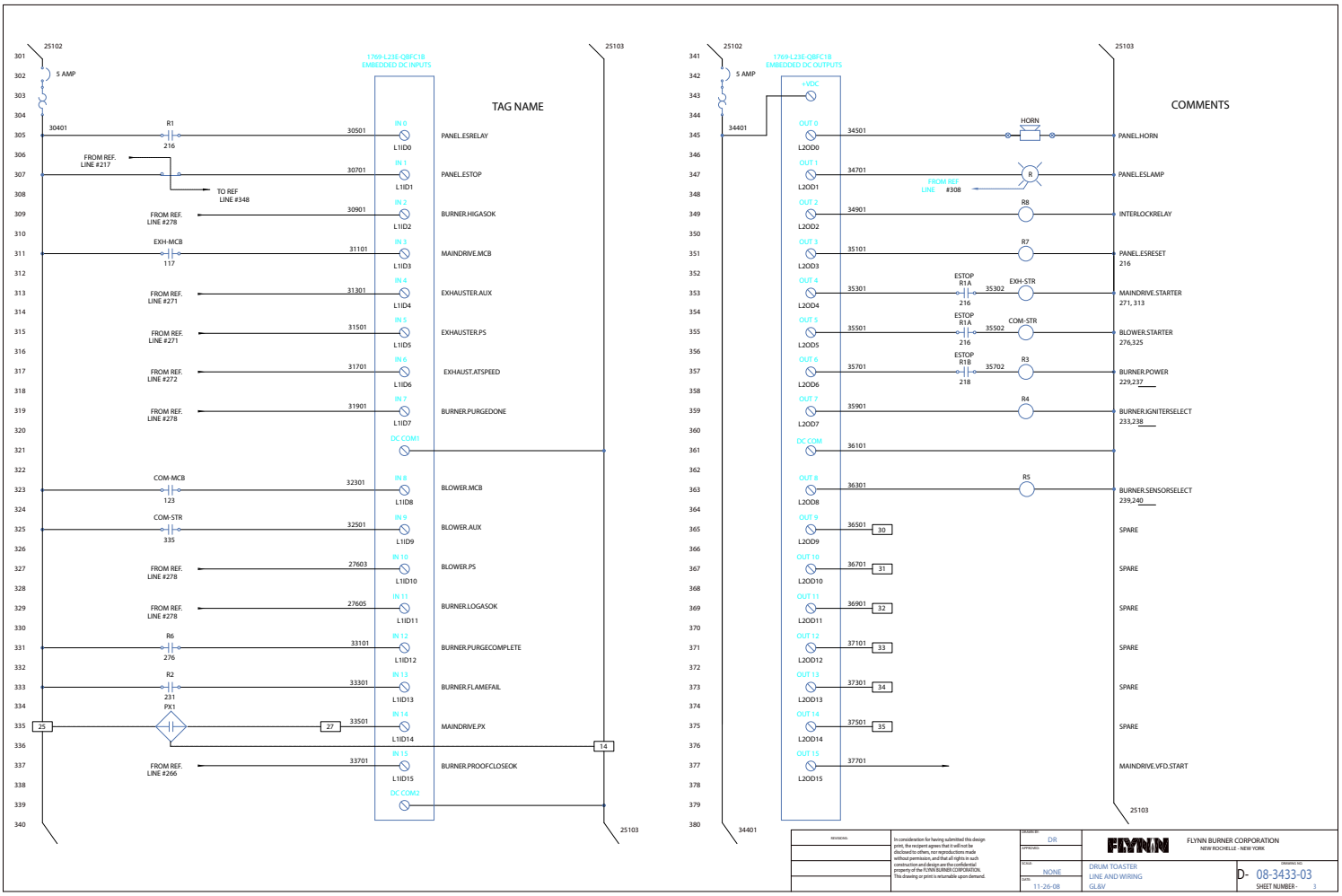
25102
5 AMP
1769-L23E-QBFC1B
EMBEDDED DC INPUTS
TAG NAME
25103
30401
R1
216
30501
IN 0
L1ID0
PANEL.ESRELAY
FROM REF.
LINE #217
TO REF
LINE #348
30701
IN 1
L1ID1
PANEL.ESTOP
FROM REF.
LINE #278
30901
IN 2
L1ID2
BURNER.HIGASOK
EXH-MCB
117
31101
IN 3
L1ID3
MAINDRIVE.MCB
FROM REF.
LINE #271
31301
IN 4
L1ID4
EXHAUSTER.AUX
FROM REF.
LINE #271
31501
IN 5
L1ID5
EXHAUSTER.PS
FROM REF.
LINE #272
31701
IN 6
L1ID6
EXHAUST.ATSPEED
FROM REF.
LINE #278
31901
IN 7
L1ID7
BURNER.PURGEDONE
DC COM1
COM-MCB
123
32301
IN 8
L1ID8
BLOWER.MCB
COM-STR
335
32501
IN 9
L1ID9
BLOWER.AUX
FROM REF.
LINE #278
27603
IN 10
L1ID10
BLOWER.PS
FROM REF.
LINE #278
27605
IN 11
L1ID11
BURNER.LOGASOK
R6
276
33101
IN 12
L1ID12
BURNER.PURGECOMPLETE
R2
231
33301
IN 13
L1ID13
BURNER.FLAMEFAIL
PX1
25
27
33501
IN 14
L1ID14
MAINDRIVE.PX
14
FROM REF.
LINE #266
33701
IN 15
L1ID15
BURNER.PROOFCLOSEOK
DC COM2
25103
25102
5 AMP
1769-L23E-QBFC1B
EMBEDDED DC OUTPUTS
+VDC
COMMENTS
25103
34401
OUT 0
L2OD0
34501
HORN
PANEL.HORN
OUT 1
L2OD1
34701
R
FROM REF
LINE #308
PANEL.ESLAMP
OUT 2
L2OD2
34901
R8
INTERLOCKRELAY
OUT 3
L2OD3
35101
R7
PANEL.ESRESET
216
OUT 4
L2OD4
35301
ESTOP
R1A
216
35302
EXH-STR
MAINDRIVE.STARTER
271, 313
OUT 5
L2OD5
35501
ESTOP
R1A
216
35502
COM-STR
BLOWER.STARTER
276,325
OUT 6
L2OD6
35701
ESTOP
R1B
218
35702
R3
BURNER.POWER
229,237
OUT 7
L2OD7
35901
R4
BURNER.IGNITERSELECT
233,238
DC COM
36101
OUT 8
L2OD8
36301
R5
BURNER.SENSORSELECT
239,240
OUT 9
L2OD9
36501
30
SPARE
OUT 10
L2OD10
36701
31
SPARE
OUT 11
L2OD11
36901
32
SPARE
OUT 12
L2OD12
37101
33
SPARE
OUT 13
L2OD13
37301
34
SPARE
OUT 14
L2OD14
37501
35
SPARE
OUT 15
L2OD15
37701
MAINDRIVE.VFD.START
25103
34401
REVISIONS:
In consideration for having submitted this design joint, the recipent agrees that it will not be disclosed to others, nor reproductions made without permission, and that all rights in such construction and design are the confidential property of the FLYNN BURNER CORPORATION. This drawing or print is returnable upon demand.
DR
NONE
11-26-08
FLYNN
FLYNN BURNER CORPORATION
NEW ROCHELLE - NEW YORK
DRUM TOASTER
LINE AND WIRING
GL&V
D- 08-3433-03
SHEET NUMBER - 3

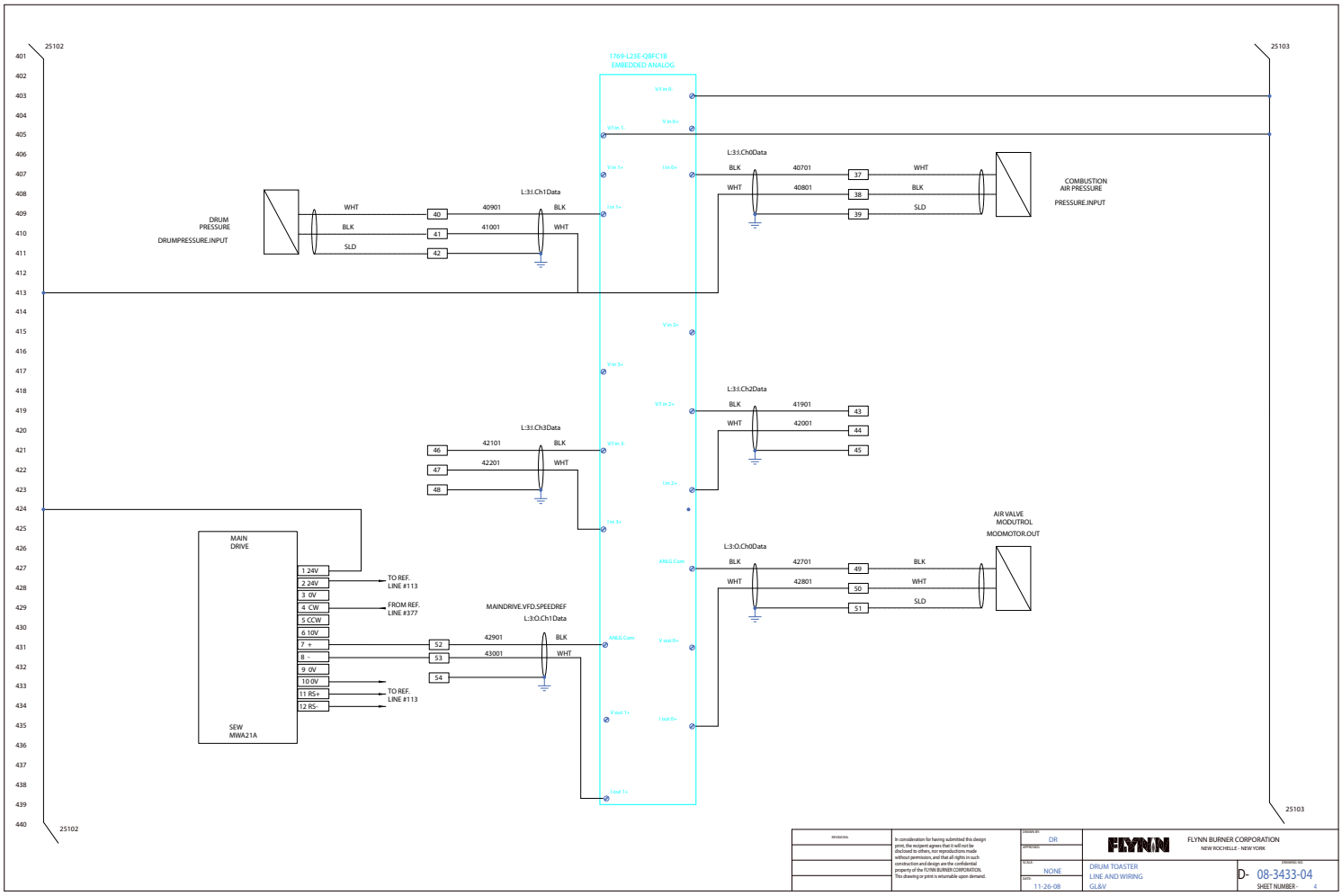
25102
25103
1769-L23E-QBFC1B
EMBEDDED ANALOG
DRUM
PRESSURE
DRUMPRESSURE.INPUT
WHT
BLK
SLD
40
41
42
40901
41001
L:3:I.Ch1Data
BLK
WHT
COMBUSTION
AIR PRESSURE
PRESSURE.INPUT
L:3:I.Ch0Data
40701
40801
37
38
39
L:3:I.Ch2Data
41901
42001
43
44
45
L:3:I.Ch3Data
42101
42201
46
47
48
MAIN
DRIVE
SEW
MWA21A
1 24V
2 24V
3 0V
4 CW
5 CCW
6 10V
7 +
8 -
9 0V
10 0V
11 RS+
12 RS-
TO REF.
LINE #113
FROM REF.
LINE #377
MAINDRIVE.VFD.SPEEDREF
L:3:O.Ch1Data
42901
43001
52
53
54
AIR VALVE
MODUTROL
MODMOTOR.OUT
L:3:O.Ch0Data
42701
42801
49
50
51
REVISIONS
In consideration for having submitted this design print, the recipient agrees that it will not be disclosed to others, nor reproductions made without permission, and that all rights in such construction and design are the confidential property of the FLYNN BURNER CORPORATION. This drawing or print is returnable upon demand.
DRAWN BY: DR
APPROVED:
SCALE: NONE
DATE: 11-26-08
FLYNN
FLYNN BURNER CORPORATION
NEW ROCHELLE - NEW YORK
DRUM TOASTER
LINE AND WIRING
GL&V
DRAWING NO.
D- 08-3433-04
SHEET NUMBER - 4

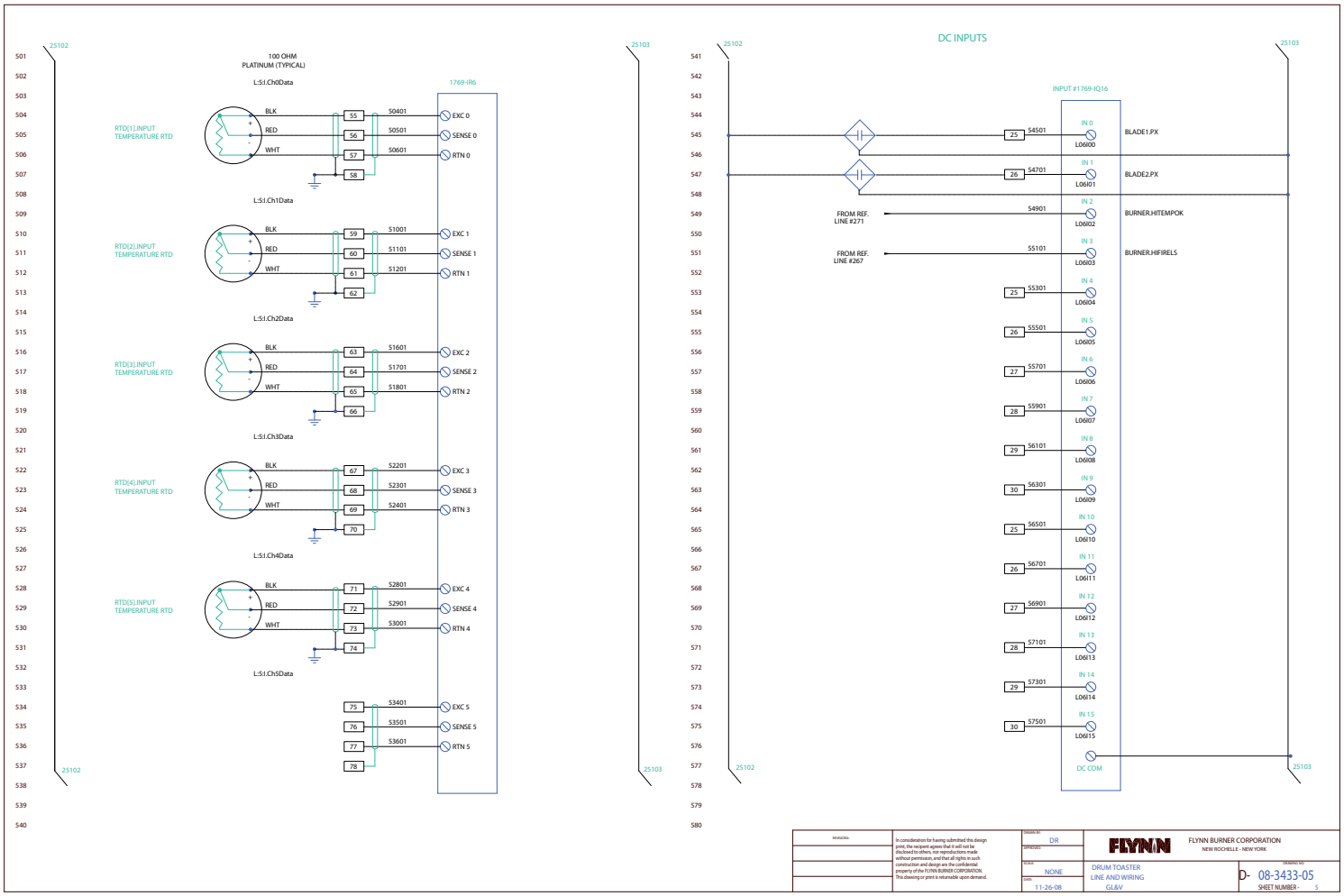
100 OHM
PLATINUM (TYPICAL)
1769-IR6
RTD[1].INPUT TEMPERATURE RTD
L:S1.Ch0Data
BLK
RED
WHT
55
56
57
58
S0401
S0501
S0601
EXC 0
SENSE 0
RTN 0
RTD[2].INPUT TEMPERATURE RTD
L:S1.Ch1Data
59
60
61
62
S1001
S1101
S1201
EXC 1
SENSE 1
RTN 1
RTD[3].INPUT TEMPERATURE RTD
L:S1.Ch2Data
63
64
65
66
S1601
S1701
S1801
EXC 2
SENSE 2
RTN 2
RTD[4].INPUT TEMPERATURE RTD
L:S1.Ch3Data
67
68
69
70
S2201
S2301
S2401
EXC 3
SENSE 3
RTN 3
RTD[5].INPUT TEMPERATURE RTD
L:S1.Ch4Data
71
72
73
74
S2801
S2901
S3001
EXC 4
SENSE 4
RTN 4
L:S1.Ch5Data
75
76
77
78
S3401
S3501
S3601
EXC 5
SENSE 5
RTN 5
DC INPUTS
INPUT #1769-IQ16
FROM REF. LINE #271
FROM REF. LINE #267
25
26
27
28
29
30
S4501
S4701
S4901
S5101
S5301
S5501
S5701
S5901
S6101
S6301
S6501
S6701
S6901
S7101
S7301
S7501
IN 0
IN 1
IN 2
IN 3
IN 4
IN 5
IN 6
IN 7
IN 8
IN 9
IN 10
IN 11
IN 12
IN 13
IN 14
IN 15
L06I00
L06I01
L06I02
L06I03
L06I04
L06I05
L06I06
L06I07
L06I08
L06I09
L06I10
L06I11
L06I12
L06I13
L06I14
L06I15
BLADE1.PX
BLADE2.PX
BURNER.HITEMPOK
BURNER.HIFIRELS
DC COM
25102
25103
FLYNN BURNER CORPORATION
NEW ROCHELLE - NEW YORK
DRUM TOASTER
LINE AND WIRING
GL&V
DR
NONE
11-26-08
D- 08-3433-05
SHEET NUMBER - 5

HOFFMAN A483010LP

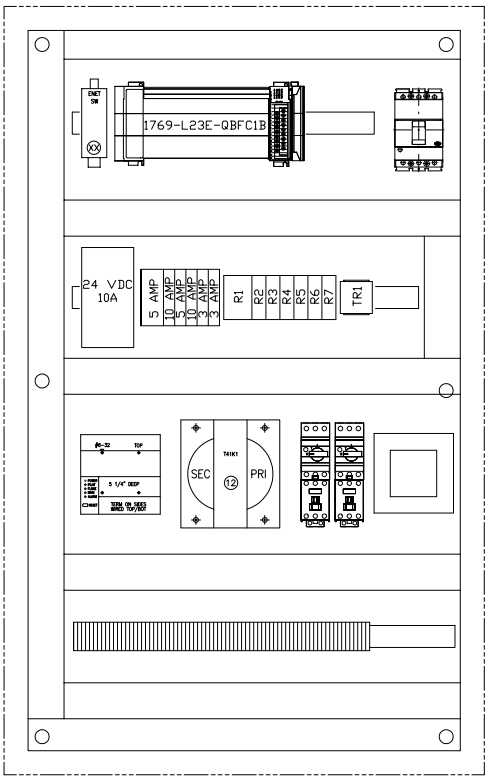

ITEM	QTY	PART #	DESCRIPTION
1	1	A483010LP	ENCLOSURE
2	1	A48P39G	PANEL, CONDUCTIVE
3	1	458-024-31	FEDERAL HORN 24 VDC
4	1	843666A	GASKET
5	1	800FP-MF44	40 MM MUSHROOM PUSH-PULL
6	1	800F-P-K01	LATCH WITH 1NC
7	1	800F-X9R	RED LED 24 VDC
8	1	800F-X1S112	ESTOP LEGEND
9	1	800F-X01	NC CONTACT BLOCK
10	2	100-C23D10	A-B IEC CONTACTOR 23A 24 VDC COIL
11	2	140M-C2E-C10	A-B MOTOR PROTECTOR 6.3-10A
12	2	100-FA20	AUX CONTACT 100C FRONT MOUNTED
13	2	140M-C-PF-C23	CONNECTION MODULE
14	2	140M-CAF-A20	AUX CONTACT 140M FRONT MOUNTED 2 N.O.
15	1	1769-L23E-QBFC1B	CompactLogix Processor, Ethernet Comms
16	1	1769-IR6	RTD CARD
17	3	700-HF34A1-4	700-HF 10 Amp Contact, 4PDT
18	3	700-HN139	700-HN139, Mini 14-Blade Base Socket
19	4	700-HF32A1-4	700-HF 10 Amp Contact, DPDT
20	5	700-HF32Z24-4	700-HF 10 Amp Contact, DPDT, 24 VDC
21	9	700-HN116	700-HN116, Mini 8-Blade Base Socket
22	1	700-HN125	8 PIN RELAY TUBE BASE
23	1	700-HLT1Z24X	700-HL Electromechanical Relay Output, SPDT (1 C/O)
24	6	TY1SNRPGI	T&B 1" DUCT FT
25	6	TY1CPG6	T&B 1" COVER FT
26	24	TY2SNRPGI	T&B 2" DUCT FT
27	24	TY2CPG6	T&B 2" COVER FT
28	1	T1H060TL	BREAKER 3 POLE 60A
29	1	KTD-VD-M	MECHANISM
30	1	OXP-BW30	SHAFT
31	1	OH185J6	HANDLE
32	1	S202-K5	ABB 5 AMP CB 2 POLE
33	2	S201-K10	ABB 10 AMP CB 1 POLE
34	1	S201-K5	ABB 5 AMP CB 1 POLE
35	2	S201-K3	ABB 3 AMP CB 1 POLE
36	1	455A-100F2-X	ATC TIMER
37	1	E DS-205	MOXA ETHERNET SWITCH
38	1	T41K1	ABB INDUSTRIAL CONTROL XFMR 240/480-120
39	1	CP-S 24/10	ABB POWER SUPPLY 24 VDC 10A
40	100		TERMINALS
41	1	GF-RJ45-R32	GFCI with RJ45 AND 3 AMP RESET

REVISIONS:	In consideration for having submitted this design print, the recipient agrees that it will not be disclosed to others, nor reproductions made without permission, and that all rights in such construction and design are the confidential property of the FLYNN BURNER CORPORATION. This drawing or print is returnable upon demand.	DRAWN BY: DR APPROVED: SCALE: 1/4"=1" DATE: 11-26-08	FLYNN BURNER CORPORATION NEW ROCHELLE – NEW YORK	
			ONION TOASTER MAIN PANEL ASSEMBLY GL&V/CON AGRA	DRAWING NO. D — 08-3433-06

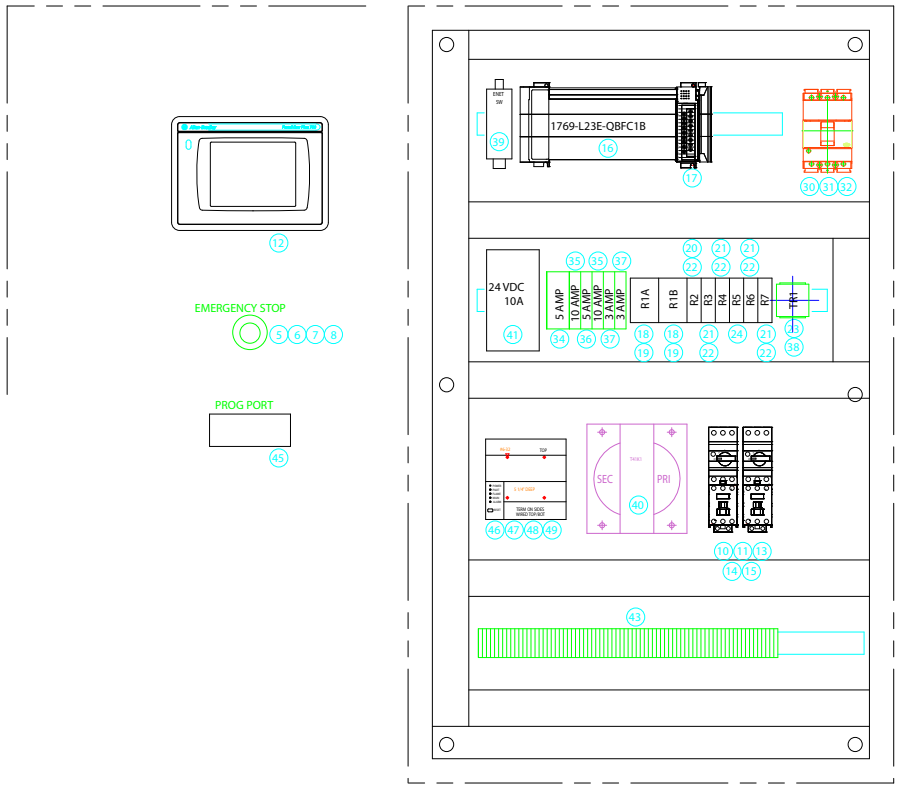

ITEM	QTY	PART #	DESCRIPTION
1	1	A483010LP	ENCLOSURE
2	1	A48P30G	PANEL, CONDUCTIVE
3	1	450-024-31	FEDERAL HORN 24 VDC
4	1	8435666A	GASKET
5	1	800FP-LMP44	40 MM MUSHROOM PUSH-PULL
6	1	800F-PX01	LATCH WITH 1NC
7	1	800F-N3R	RED LED 24 VDC
8	1	800F-15YE112	ESTOP LEGEND
9	1	800F-X01	NC CONTACT BLOCK
10	2	100-C23ZJ10	IEC CONTACTOR 23A 24 VDC COIL
11	2	140M-C2E-C10	MOTOR PROTECTOR 6.3-10A
12	1	2711P-T7C4D1	PANELVIEW PLUS 700 COLOR TOUCH ETHERNET AND RS-232
13	2	100-FA20	AUX CONTACT 100C FRONT MOUNTED
14	2	140M-C-PEC23	CONNECTION MODULE
15	2	140M-CAFA20	140M FRONT MOUNTED 2 N.O.
16	1	1769-L23E-QBFC1B	CompactLogix Processor, Ethernet Comms
17	1	1769-IR6	RTD CARD
18	3	700-HF34A1-4	RELAY 10 Amp Contact, 4PDT
19	3	700-HN139	Mini 14-Blade Base Socket
20	4	700-HF32A1-4	10 Amp Contact, DPDT
21	5	700-HF32ZZ24-4	RELAY 10 Amp Contact, DPDT, 24 VDC
22	9	700-HN116	Mini 8-Blade Base Socket
23	1	700-HN125	8 PIN RELAY TUBE BASE
24	1	700-HLT1Z24X	Electromechanical Relay Output, SPDT (1 C/O)
25	6	TY1X4NPG6	T&B 1" DUCT FT
26	6	TY1CPG6	T&B 1" COVER FT
27	24	TY2X4NPG6	T&B 2" DUCT /FT
28	24	TY2CPG6	T&B 2" COVER /FT
29			
30	1	T1N060TL	BREAKER 3 POLE 60A
31	1	KT3VD-M	MECHANISM
32	1	OXP6X430	SHAFT
33	1	OHY65J6	HANDLE
34	1	S202-K5 ABB	5 AMP CB 2 POLE
35	2	S201-K10	10 AMP CB 1 POLE
36	1	S201-K5	5 AMP CB 1 POLE
37	2	S201-K3	3 AMP CB 1 POLE
38	1	405A-100-F-2-X	ATC TIMER
39	1	EDS-205	ETHERNET SWITCH
40	1	T41K1	INDUSTRIAL CONTROL X-FMR 240X480-120 1KVA
41	1	CP-S 24/10.0	POWER SUPPLY 24 VDC 10A
42			
43	100	TERMINALS	TERMINALS
44			
45	1	GF-RJ45-R-32	GFCI with RJ45 AND 3 AMP RESET
46	1	F7890A1015	FLAME RELAY- HON
47	1	Q7800A1005	FLAME RELAY, SUB BASE- HON
48	1	S7820A107	FLAME RELAY, RESET INTERFACE- HON
49	1	R7847A1033	FLAME RELAY, FLAME ROD AMPLIFIER- HON

REVISIONS:

In consideration for having submitted this design print, the recipient agrees that it will not be disclosed to others, nor reproductions made without permission, and that all rights in such construction and design are the confidential property of the FLYNN BURNER CORPORATION. This drawing or print is returnable upon demand.

DRAWN BY: DR
APPROVED:
SCALE: 1/4"=1"
DATE: 11-26-08

FLYNN BURNER CORPORATION
NEW ROCHELLE - NEW YORK

DRUM TOASTER
MAIN PANEL ASSEMBLY
GL&V

DRAWING NO: D- 08-3433-10

ITEM	D.P. #	QNT.	DESCRIPTION
1	177646	1	COCK, GAS, 1 1/4" LEVER HANDLE
2	405247	1	MAIN GAS VALVE, DUNGS 1 1/4" 120VAC
3	160190	1	GOVERNOR 1" GAS
4	407799	1	BLOWER COMB PFR DR757CK72X 4 HP
5	302063	1	HEADER, AIR, 4" x 4", DWG #07-1560-10
6	300036	1	HEADER, GAS, 3" x 3", DWG #08-3433-16
7	177770	2	VALVE BUTTERFLY 8BV-1"
8	095000	1	UNIMIXER, #1616 ASS'Y A, W/RATIO SCREW
9	402638	1	SWITCH JD-2 W/RED SPRING W/BRACKET
10	160034	1	VALVE, AIR PESSURE RELEIF 1", FISHER #289H
11	127550	1	MUFLER
12	116893	1	FILTER, AIR, FUJY CONNECTON
13	119500	1	GAUGE, 55GI, 1/4" BACK CONNECTION
14	119661	1	GAUGE, VACUUM, 1/4" BACK CONNECTION
15	174775	1	TRANSDUCER PRESSURE OMEGA PX319-002GI
16	127445	1	MOTOR MODUTROL, STROKE 4-20 MA 30 SEC
17	177792	1	VALVE BUTTERFLY 16BV-2" CMAP (OLD VERSION)
18	401088	1	2 1/2" IPS x 4 1/2" LG (TOE)
19	401088	1	2 1/2" IPS x 6" LG (TOE)
20	403099	1	2 7/8" I.D. x 4" LG HOSE W/CLAMPS
21	141919	1	2 1/2" x 2 1/2" x 1" TEE
22	403103	2	2 1/2 IPS x 7 1/2" LG
23	138775	1	1/8 IPS x 1 1/2" LG
24	402304	1	1/4 IPS x 1 1/4" LG.
25	403100	1	2 1/2" TEE
26	403101	1	2 1/2" x 1/4" BUSHING
27	143300	1	NIPPLE 2" CLOSE
28	157300	1	2" UNION
29	143560	1	2 IPS x 10" LG
30	143350	2	2 IPS x 2 1/2" LG.
31	143470	1	2 IPS x 5" LG.
32	143403	1	2 IPS x 12" LG.
33	401405	1	3 x 2 REDUCING COUPLING
34	153000	2	2 x 2 x 3/4 TEE
35	133600	2	3/4 x 1/4 BUSHING
36	141430	1	1 1/4 IPS x 10" LG.
37	141250	1	1 1/4 IPS x 5" LG.
38	140883	1	1 IPS x 14 1/2" LG.
39	140750	1	1 IPS x 5" LG.
40	140700	2	1 IPS x 4 1/2" LG.
41	137800	1	1/4 IPS x 2 1/2" LG.
42	135950	1	1/4 x 45° EL.
43	157150	2	1" UNION
44	177002	1	1/4" COPPER BAL. TUBE
45	140650	1	1 IPS X 4" LG.
46	140400	3	NIPPLE 1" CLOSE
47	148850	1	PIPE TEE 1"
48	148650	1	PIPE TEE 1/4"
49	144530	1	PIPE PLUG 1/4"
50			

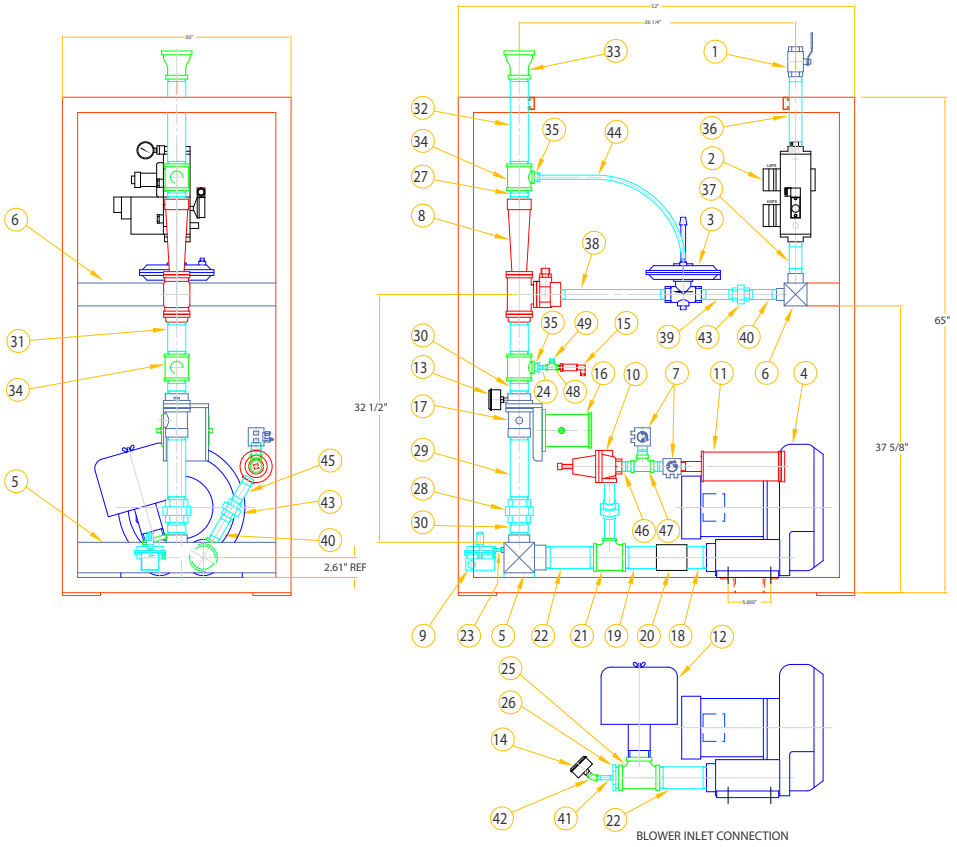

REVISIONS:		DRAWN BY: ML	FLYNN BURNER CORPORATION NEW ROCHELLE - NEW YORK		
		APPROVED BY: VC			
		SCALE: 1:12	D.P. #303909	DRAWING NO.	SIZE
		DATE: 12/31/08	2 BURNER PRETREATER AIR/GAS PIPING	08-3433-13	B

In consideration for having submitted this design print, the recipient agrees that it will not be disclosed to others, nor reproductions made without permission, and that all rights in such construction and design are the confidential property of the FLYNN BURNER CORPORATION. This drawing is returnable upon demand.

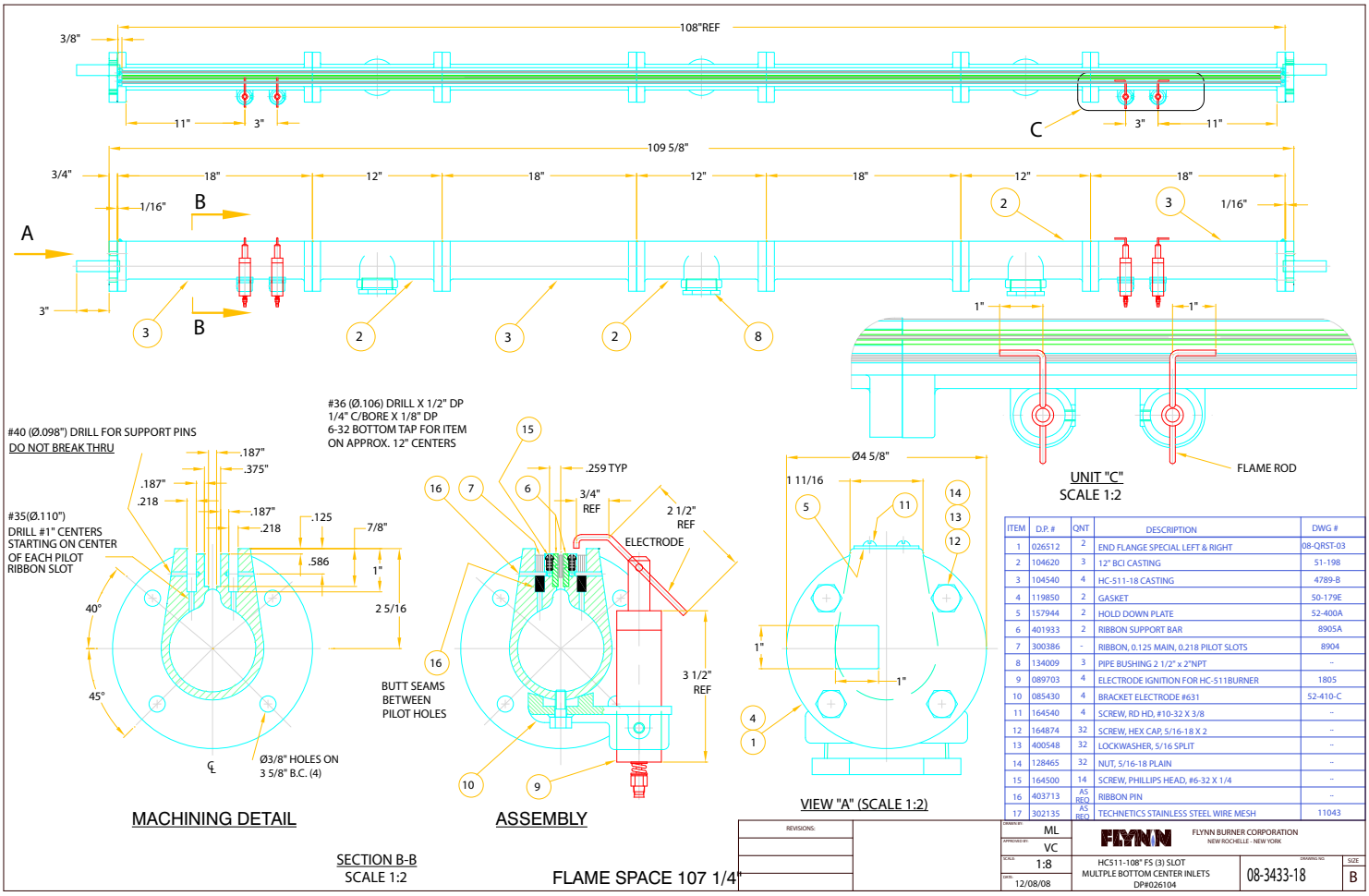

ITEM	D.P. #	QNT	DESCRIPTION	DWG #
1	026512	2	END FLANGE SPECIAL LEFT & RIGHT	08-QRST-03
2	104620	3	12" BCI CASTING	51-198
3	104540	4	HC-511-18 CASTING	4789-B
4	119850	2	GASKET	50-179E
5	157944	2	HOLD DOWN PLATE	52-400A
6	401933	2	RIBBON SUPPORT BAR	8905A
7	300386	-	RIBBON, 0.125 MAIN, 0.218 PILOT SLOTS	8904
8	134009	3	PIPE BUSHING 2 1/2" x 2"NPT	--
9	089703	4	ELECTRODE IGNITION FOR HC-511BURNER	1805
10	085430	4	BRACKET ELECTRODE #631	52-410-C
11	164540	4	SCREW, RD HD, #10-32 X 3/8	--
12	164874	32	SCREW, HEX CAP, 5/16-18 X 2	--
13	400548	32	LOCKWASHER, 5/16 SPLIT	--
14	128465	32	NUT, 5/16-18 PLAIN	--
15	164500	14	SCREW, PHILLIPS HEAD, #6-32 X 1/4	--
16	403713	AS REQ	RIBBON PIN	--
17	302135	AS REQ	TECHNETICS STAINLESS STEEL WIRE MESH	11043

REVISIONS:

DRAWN BY: ML
APPROVED BY: VC
SCALE: 1:8
DATE: 12/08/08

FLYNN BURNER CORPORATION
NEW ROCHELLE - NEW YORK

HC511-108" FS (3) SLOT
MULTPLE BOTTOM CENTER INLETS
DP#026104

DRAWING NO. 08-3433-18
SIZE B

Appendix F: System Characterization Procedure

Procedure for system characterization and tune up

1. Start the GFDD system from the control panel (make sure that drum is rotating, purging complete, interlocks enabled, burner ignited and flame proven).

2. Set rotation speed to 2 RPM and setpoint temperature to 250F (make sure that doctor blade is loaded with 15 psi and properly adjusted for uniformity and all 5 RTDs are in service).

3. Record measurements every 10 minutes (RTD readings and corresponding drum surface temperature in close proximity to RTD location by using contact TC)

4. When reaching the steady state operation (at least 1-2 cycles between +1 degree over setpoint and +5 degrees over setpoint) the system is ready for the product application. Keep optical scanner up and running for the product quality measurement.

5. Run the product until product scan numbers are going to be stabilized. If product is lighter than required, stop the product application, slow down the drum to 1 RPM, wait for steady state conditions and repeat the production trial. If product still light DO NOT reduce rotation speed below 1 RPM – increase setpoint temperature to 260F (or 280F, 300F, as needed). Do not exceed 320F as setpoint temperature (over 450F drum temperature). If product is darker that required, stop the product application, accelerate drum rotation to 3 RPM, wait for steady state conditions and repeat the production trial. If product darker again – accelerate drum rotation until getting the required results.

6. Continue data collection every 5-10 minutes during all the runs along with the appropriate product scans. Upon completion of trial run (item 5) operation team is going to have all the curves for qualified characterization of the commercial production process.

Appendix G: Bedeosian & Associates (DVBE) Report on Gas-Fired Drum Dryer Marketing Calls

Aug. 17, 2009

1.1.1. DRUM DRYER MARKETING CALLS REPORT

To: Dr. Yaroslav Chudnovsky

Gas Technology Institute

1700 South Mount Prospect Road

Des Plaines, Illinois 60018

From: Tod Bedrosian

Bedrosian & Associates

Bedrosian & Associates contacted hundreds of commercial agricultural products firms throughout the nation in search of firms that might be interested in the new gas-fired drum dryer technology developed by Gas Technology Institute. A separate report and record of all the calls made during the work period in August, 2009 is being sent to Dr. Yaroslav Chudnovsky at GTI.

This report is a synopsis of the companies that responded with sufficient interest that Bedrosian & Associates recommends drum dryer technology information be sent to them.

Bedrosian & Associates is available to assist with any inquiries GTI may have concerning these marketing/research calls.

The information is incomplete in some cases because firms would not give us "confidential" business information, but in all cases we have provided sufficient contact information.

Many of these firms only asked for information and may not be viable leads. But we have made notes about some of the firms that expressed a sincere interest in talking to GTI about gas-fired drum dryers.

1) 6 Cents Diversified Inc. 207-780-1101

Davey Pruzanski info@living nuts.com

746 Post Road Bowdoinham ME 04008-6015

Comments: Very small drying operation without drum dryer, but they are interested in looking at the technology

2) American Spoon Foods Inc. 231-347-9030

P.O. Box 566 Petroskey MI 49770

Send information to Paul Ramey at Pramey@Spoonnet..com

Comments: They send cherries out to be dried and would not release name of drying firm, but will send GTI information to the dryer.

3) Basic American Foods Inc. 925-472-4000

Gary Dunn 208-785-8779

2121 N. California Blvd., Ste. 400

Walnut Creek CA 94596-2066

Comments: Mr. Dunn sounded very interested. Slava has sent him some preliminary information.

4) Campbell's Soup Co.

1-856-342-4800

1 Campbell Place Camden NJ 08103-1701

Mr. Bill Banks (856) 432-4953 (Associate of Mary Tenant)

Comments: He would like to talk about the technology.

5) Casa de Fruta 408-842-7282

831-637-2781

10021 Pacheco Pass Hwy Hollister CA 95023

Send information to Joe Zanger at joe@casadefruta.com

Comments: They don't have drum dryers, but would like to learn more.

6) Glasgow Spray-Dry Inc. 270-651-2146

1117 Cleveland Ave. Glasgow KY 42141

KJwilliams@bluegrassdairy.com Kerry Williams 270-651-2146

Comments: Unsure if they have drum dryer, but they would like information.

7) Hegin's Potato Products L.L.C. 570-695-0909

P.O. Box 27 Hegins PA 17938-0027

Comments: They do have a drum dryers and would like to talk.

8) Rizo-Lopez Foods Inc.

Sam Ram, Plant Manager sram@rizolopez.com

6625 2nd Street Riverbank

Comments:

Generally interested.

This company is not currently using drum dryers, but may look at acquiring GFDD in 3-4 years.

9) Simplot Food Group

Alan Christie, Eng. Mgr. alan.christie@simplot.com

P.O. Box 9386 Boise, ID 83707

Comments: Actively interested.

This company uses direct-fire natural gas to dry potato flakes. E-mail info to alan.christie@simplot.com

10) Smeltzer Orchard Co.

info@smeltzerorchards.com

6032 Jofield Rd. Frankfort, MA 49635

"Smeltzer does not participate in surveys." Okay to send info to info@smeltzerorchards.com.

11) Setton's International Foods 631-543-8090

info@settonfarms.com

85 Austin Blvd. Commack NY 11725

Generally interested. E-mail info to info@settonfarms.com.

12) Washington Potato Company 509-349-8803

Steve R., Plant Manager stever@oregonpotato.com

1900 1st Avenue N.W. Warden WA 98857

Comments: Generally interested.

This company currently uses steam dryers only and "will be burdened with these for some time."

13) Tree Top Inc. 509-697-7251

Andy Juarez

P.O. Box 248 Selah WA 98942

Comments: Actively interested. This company uses steam fired by natural gas to dry apple slurry. Prefers to receive info via U.S. mail, ATTN: Andy Juarez.

14) World Food Products Inc. 209-531-2330 Marty Van Duyn

marty@worldfoodproducts.com

2208 Pine Street Ceres CA 95307

Comments:

This is a packing company. Send info to marty@worldfoodproducts.com

and he will distribute to processors.

15) Idaho Fresh-Pak Inc. 208-754-4686 Scott Pood

P.O. Box 130 Lewisville ID 83431

Comments:

Mr. Scott's # is: 208-754-8156. Yes, send info.

16) Idaho Pacific Corporation 208-538-6971 Todd Sutton

P.O. Box 478 Ririe ID 83443

Yes, send info. Very interested. They have 10 steam drum dryers now that dry potatoes.

17) Jade Food Products Inc. 808-678-8886

94-476 Koaki Street Waipahu HI 96797-2874

Yes, send info. Use propane.

18) Lance Inc. 800-438-1880

Greg Flickinger

8600 South Blvd. Charlotte NC 28273

Yes, send info. Starting 2 new plants. Now have direct fire ovens.

19) L'Espirit De Campagne Inc. 540-955-1014

P.O. Box 3130 Winchester VA 22604

Yes, send info.

20) Lester Farms 530-795-2693

Stan

Lester

4317 Margaret Lane Winters CA 95694

Send info.

21) Maine Wild Blueberry Co. 207-255-8364

Ken Fullerton

cfullerton@oxforfrozenfoods.com

50 Elm Street Machias ME O4654

Have gas-fired best. Thinking of new equip. Send info.. Use Ext. 3213.

22) Mariani Packing
Company, Inc. 707-452-2853

Todd Garcia

500 Crocker Avenue Vacaville CA 95688

Send info.

23) Oregon Potato Co. 541-481-2715

Barry

P.O. Box 169 Boardman OR 97818-0169

Comments: They have steam drum dryers now that dry potatoes. Capacity is 15,000 lbs and hour. They would like information.